ELECTRONICS COMPUTING COMMUNICATIONS BROADCASTING AUDIO AND VIDEO

wireless world

FEBRUARY 1983 80p

Australia A$ 2.70
Canada C$ 3.25
Denmark DKR. 33.25
Germany DM. 7.00
Greece DRA. 190.00
Holland DFL. 8.50
Italy L 3700
New Zealand NZ$ 3.00
Norway NKR. 26.00
Singapore M$ 5.50
Spain PTS 275.00
Switzerland FR. 7.00
U.S.A. $ 3.75

Semi-custom i.cs

Serial interfacing

Interface intermodulation

Error detection and correction

Taking the lid off wave theory

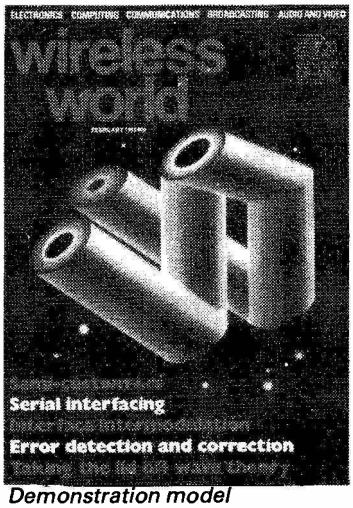

Demonstration model photographed at Computer Graphics 82 by Les Davis from Dicoll Electronics AD767 terminal was generated using CDC Synthavision software.

NEXT MONTH

Bob Coates looks at microprocessor registers from a programming point of view in a tutorial article introducing assembly-language programming.

Home alarm design by Paul Bruin makes the intruders task more difficult by separating the arm/disarm function and sensors. Three separate alarms are activated sequentially in a further effort to baffle and a flashing lamp outside the building helps to trace the break-in

A recent development in communications, the spread-spectrum technique is said to revolutionise the technology. It offers anti-jamming capability, low detectability by an unauthorized receiver, accurate ranging and a high degree of multipath rejection. Norman Mahmood describes the design of such a system.

An autoranging 10MHz digital frequency meter is designed around the 74C926 counting and display module by F. P. Caracausi.

Current issue price 80p, back issues (if available) £1, at Retail and Trade Counter, Units 1 & 2, Bankside Industrial Centre, Hopton Street, London SE1. Available on microfilm; please contact editor.
By post, current issue £1.23, back issues (if available) £1.80, order and payments to EEP General Sales Dept., Quadrant House, The Quadrant, Sutton, Surrey SM2 5AS Tel: 01-661 8668.
Editorial & Advertising offices: Quadrant House, The Quadrant, Sutton, Surrey SM2 5AS.
Telephones: Editorial 01-661 3614. Advertising 01-661 3130. See leader page.
Telex: 892084 BISPRS G.
Subscription rates: 1 year £14 UK and £17 outside UK.
Student rates: 1 year £9.35 UK and £11.70 outside UK.
Distribution: Quadrant House, The Quadrant, Sutton, Surrey SM2 5AS. Telephone 01-661 3248.
Subscriptions: Oakfield House, Perrymount Road, Haywards Heath, Sussex RH16 3DH. Telephone: 0444 59188. Please notify a change of address.
USA: $44 surface mail, $98.30 airmail. US subscriptions from IPC B.P., Subscriptions Office, 205 E.42nd Street, NY 10017.
USA mailing agents: Expediters of the Printed Word Ltd, 527 Madison Avenue, Suite 1217, New York, NY 10022. 2nd class postage paid at New York.
© IPC Business Press Ltd. 1983 ISSN 0043 6062.

BROADCASTING
ELECTRONICS
AUDIO

wireless world

COMMUNICATIONS
COMPUTING
VIDEO

FEBRUARY 1983

VOL 89 NO 1565

29 Deus ex machina

30 **INTERFACE INTERMODULATION**
by R. R. Cardell

34 **NEWS**
Cellular radio Maritime radio Computer language

38 **TWO-METRE TRANSCEIVER – 4**
By T. D. Forrester

42 **COMMUNICATIONS**
TAT 8 Satellite shuttle "Amateur" satellite?

44 **DATA ERROR DETECTION AND CORRECTION**
by J. R. Watkinson

49 **MICROCOMPUTER INTERFACE FOR 12BIT DATA ACQUISITION**
by M. R. Driels

53 **ADVANCED ARCHITECTURE ARRAYS**
by R. Lipp

56 **LETTERS TO THE EDITOR**
Hams and CB Distress signals Phase locked cavities

62 **PIONEERS OF UHF TELEVISION**
by A. Emmerson

64 **RS232 TO CURRENT LOOP SERIAL INTERFACING**
by L. Macari

65 **ROGER BLEEP FOR CB TRANSCEIVERS**
by P. J. Chalmers

68 **WAVES OF IMPROBABILITY**
by W. A. Scott Murray

70 **CIRCUIT IDEAS**
Harmonic locking Motor control
Constant-current charger

74 **ANALOGUE RECORDING USING DIGITAL TECHNIQUES**
by T. Loughlin

76 **STEPPER MOTOR DRIVE CIRCUIT**
by A. D. Dalley

79 **MODULAR PREAMPLIFIER**
by J. L. Linsley Hood

82 **NEW PRODUCTS**
Micro add-ons Imaging for micros Clock decoder

120 **INDEX TO ADVERTISERS**

wireless world

Editor:
PHILIP DARRINGTON
01-661 3128

Deputy Editor:
GEOFFREY SHORTER, B.Sc.
01-661 8639

Technical Editor:
MARTIN ECCLES
01-661 8638

News Editor:
DAVID SCOBIE
01-661 8632

Drawing Office Manager:
ROGER GOODMAN
01-661 8690

Technical Illustrator:
BETTY PALMER

Advertisement Manager:
BOB NIBBS, A.C.I.I.
01-661 3130

BARBARA MILLER
01-661 8640

Northern Sales:
HARRY AIKEN
061-872 8861

Midland Sales:
BASIL McGOWAN
021-356 4838

Classified Manager:
BRIAN DURRANT
01-661 3106

IAN FAUX
01-661 3033

Production:
BRIAN BANNISTER
(Make-up and copy)
01-661 8648

Publishing Director
DAVID MONTGOMERY
01-661 3241

Deus ex machina

A commonplace conceit amongst writers of science-based fiction and in some of the less thoughtful daily press is the attribution of human characteristics to computers, in their projected, future form. It is a fancy only a whisker away from fact and one with which it is easy to "make your flesh creep", although it is unlikely that the Fat Boy had this particular method in mind. Often, the evocation of anthropoid machines is done so effectively that many are encouraged in their anticipation of an Orwellian future, starting precisely on time on January 1, 1984.

Such fears and their stimuli are insupportable. Although it is probable that computers will begin to emulate humans in some respects – for example, expert systems will be holistic to some extent in that they will be able to produce better results than would be apparent from the input data – no computer will ever be moved by the Bruch G Minor or print out a poem in anything more than buzz words obtained from a look-up table.

The scrapping of a computer is not a fit occasion for grief, except inasmuch as the cost of a new one might bring tears to the eyes. When someone who is close to one dies, it becomes very clear that humanity is both short-lived and unique; one is shocked and temporarily deranged, and mystical questions of an afterlife are raised. Not so with any possible extension of computers.

To prophesy that computers will ever experience love, hate, affection, anger or even simple pleasure is not only sacrilegious but utterly ludicrous. A person is holistic to a far greater extent than any machine can ever be: a collection of simple, functional cells takes on a personality and a mind which recognizes its own corporal mortality, but which creates its own spiritual immortality in hope. Electronic hardware is for ever limited to the sum of its parts – only a human can design the process whereby it exceeds that sum.

One of the gifts of humankind which distinguishes it from the bestial is man's willingness to perform actions for the sole benefit of others – particularly when these actions are likely to work against his own interests. He will often do this simply because he thinks the other person will be delighted with the outcome, and he will derive pleasure from observing the delight. No machinery here. And is it possible to imagine a computer seeing the funny side of a nonsense poem?

It is obscene to credit any man-made device with these God-given human strengths and frailties: it is patently impossible for it to possess them, and to even try to endow a machine with these characteristics may be suspect. Machines are fitted to endure work that humans find undesirable or impossible and computers, like any tool, extend the capabilities of humans. That is their only part to play: theirs is not to compete, but to assist.

Interface intermodulation in amplifiers

Analysis, computer simulation, and measurements on real power amplifiers suggest that amplifiers with high open-loop output impedance are not more susceptible to interface intermodulation.

by Robert Cordell

Interface intermodulation occurs when a reaction signal from a loudspeaker enters the output of an amplifier, propagates around the feedback loop, and intermodulates with the input signal in the forward path of the amplifier. It has been stated that amplifiers which have high open-loop output impedance, and which necessarily rely on greater negative feedback for a low output impedance, are more susceptible to interface intermodulation. However, analysis, computer simulation and measurements on real power amplifiers (not models with artificial distortion mechanisms) here show that such amplifiers are in fact no more susceptible and may perform better in other areas.

A loudspeaker presents a complex load to the amplifier, often with several significant resonances. Its impedance can rise to over ten times and fall to less than 80% of its rated value. However, simple network theory tells us that if the amplifier has a high damping factor, frequency response errors created by this complex loading will be minimal. Damping factor is a popular term for characterizing the "stiffness" of an amplifier's output – its ability to resist output voltage changes due to load currents. It is usually specified as the ratio of eight ohms to the amplifier's (closed-loop) output impedance.

The electromechanical system of the loudspeaker, particularly the woofer, also represents an energy storage and generation capability, as any movement of the cone generates e.m.f. from the voice coil and magnet. This movement could be due either to cone momentum developed by earlier excitation or to sound in the acoustical environment of the loudspeaker. The capability thus exists for the loudspeaker to inject a signal back into the output of the amplifier.

It has been suggested that if this signal makes its way back to the amplifier input via the feedback network (i.e. as an error signal) and subsequently travels through the non-linearities in the forward path of the amplifier along with the input signal, intermodulation may result. The natural output impedance of an amplifier without negative feedback is called its impedance. When negative feedback is applied open-loop output impedance becomes much smaller corresponding to an increased damping factor. In essence, the concern is that a high damping factor produced synthetically by a high feedback factor does not provide intrinsic damping at the amplifier output. It has further been implied that a low open-loop output impedance provides a true physical impedance which can damp most of the injected signal right at the output, with less resort to circulating correction signals.

This distortion mechanism has been termed interface intermodulation, and it has been suggested that this may account for some audible differences among amplifiers not accounted for by conventional measurements. It has been more formally defined as follows:

> "Interface intermodulation is a form of distortion in a feedback two-port network, caused by non-linear interaction between the input signal of the two-port and a signal externally injected to the output port propagating into the input via the feedback network." (ref.1)

Although by this definition intermodulation will be zero in an amplifier with no overall negative feedback, any amplifier which has a non-linear output impedance will produce intermodulation at the interface even if it has no overall negative feedback. The measurement method proposed also does not distinguish interface distortion produced by feedback from that produced directly by a non-linear output impedance.

Although the intuition expressed in Ref. 1 regarding the influence of open-loop output impedance seems plausible at first glance, it must be more carefully examined, as it has implications for selection of amplifier topology and characteristics. In fact, many contemporary power amplifiers have fairly high open-loop output impedance. As in the case of transient intermodulation distortion, it represents an indictment of the use of large values of negative feedback. Such indictment has been shown to be unjustified with transient intermodulation [2, 3, 4]; we show here that it is also not justified with interface intermodulation [5].

Analysis

Although the nature of the loudspeaker reaction signal can be argued, for analysis

This article examines the mechanism and looks at internal amplifier error signals and intermodulation induced by signals externally injected at the output of amplifiers with high and low values of open-loop output impedance. The use of detailed computer simulations and experimental measurements of real amplifier circuits reduces the need of simplifying assumptions which could lead to erroneous conclusions.

Based on this investigation, it appears that high feedback factor and high open-loop output impedance do not increase the likelihood of interface intermodulation. Rather, what is important is the ratio of these quantities, or simply *closed-loop* output impedance. Put in a slightly different way, high magnitude and/or linerity of open-loop transconductance is desirable in minimizing interface intermodulation. Because this condition is easily achieved in practice, this intermodulation is not a significant problem in modern amplifiers where adequate current drive capability exists.

Why do amplifiers with similar conventional characteristics have different-sounding low ends? Interface intermodulation is one possibility, but more likely causes are power supply interactions, coupling capacitor effects, clipping and safe-area limiter behaviour, and frequency response effects due to differences in damping factor.

In a philosophical sense, the concern that high feedback factor and high open-loop output impedance cause intermodulation seems to arise out of the same kind of misunderstanding of the operation and application of negative feedback which prompted many to conclude erroneously that large feedback factor and narrow open-loop bandwidth caused transient intermodulation. While it is not a universal panacea, negative feedback does perform as advertised when correctly analysed.

and measurement it can be treated as an independent current injected at the output of the amplifier. This should not be construed to support the notion that the speaker load in practice is anything much more than a complex passive RLC load, however. The reaction signal can be treated as a current because we are assuming an amplifier with moderate to high damping factor, so that any voltage change induced at the output by the reaction signal is small. Studying the nature of interface intermodulation thus involves evaluating the consequences of both the higher output currents that the amplifier must supply and the correction signal which keeps the output from changing as a result of the reaction current.

Regardless of whether there exists a low "physical" open-loop output impedance, it should be clear that the amount of the reaction signal travelling back to the input as a voltage via the feedback path is by definition determined by the *closed-loop* output impedance. The closed-loop output impedance determines how much reaction signal voltage is developed at the output in response to the reaction signal current. This voltage, divided by feedback path attenuation, is the reaction signal fed back and circulated, and it doesn't matter whether the closed-loop output impedance is mostly "physical" or mostly synthesized by negative feedback. The level of the reaction signal fed back will thus be the same for all amplifiers with the same closed-loop gain and damping factor.

Even in amplifiers with low feedback and low open-loop output impedance (say 10dB and 0.3Ω) the reaction signal is still far more significant than the "physical" open-loop output impedance in establishing the closed-loop output impedance and thus deeping the output node from moving around. For this reason the concept of so-called intrinsic damping at the output by a physical open-loop ouput impedance is of little value. The cost of achieving a very low closed-loop output impedance is about the same (low) for both high and low open-loop ouput impedance topologies.

Sources of distortion in amplifiers can usually be divided into two categories: those which depend primarily on output voltage and those which depend primarily on output current. Ordinary clipping is an example of the first while non-linearity in the current gain β of the output transistors is an example of the second. Because the loudspeaker reaction signal represents only increased current taxation, interface intermodulation will primarily result from the last-mentioned current-dependent mechanism. Transconductance is the term which describes gain from an input voltage to an output current, specified in amps/volt or mhos. Linearity of this quantity as opposed to voltage gain is particularly relevant to interface intermodulation; it will generally be less than the conventional SMPTE intermodulation, which exercises both voltage and current distortion mechanisms.

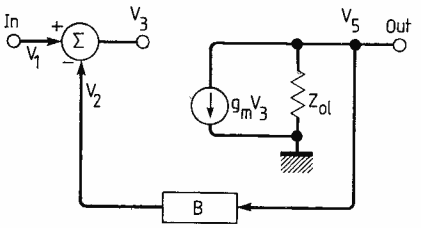

Fig. 1. Thévenin amplifier model where the open-loop amplifier is represented as a voltage source equal to the no-load output voltage in series with an impedance equal to the open-loop output impedance, Z_{ol}. Voltage V_4 does not physically exist.

The simplified feedback amplifier can be modelled by means of either a Thévenin representation of Fig. 1, or a Norton representation of Fig. 2. Each representation is valid, but the insight provided van be slightly different. In Fig. 1, the open-loop amplifier is represented as a block of voltage gain A in series with the open-loop output impedance, Z_{ol}. Negative feedback is provided by the attenuation network labelled B. The no-load feedback factor is A·B, and the closed-loop output impedance Z_{cl} can be found by applying a voltage to the output and calculating the resultant current flow:

$$Z_{cl}=Z_{ol}\|\frac{Z_{ol}}{AB}=\frac{Z_{ol}}{1+AB}\approx\frac{Z_{ol}}{AB}.$$

The closed-loop output impedance is less then the open-loop output impedance by the factor 1 + A B, as expected. For most normal situations, where Z_{cl} is significatly less than Z_{ol} (i.e. A B ≫ 1), the second term is dominant and the approximation shown is justified. In reality Z_{ol}, Z_{cl}, A, and sometimes even B will be functions of frequency. For a given damping factor and closed-loop gain, open-loop voltage gain will be proportionately larger in amplifiers with high open-loop output impedance. Higher open-loop gain tends to naturally accompany high-Z_{ol} topologies and does not imply more active devices.

Models such as this are usually adequate representations of the terminal properties of what is being modelled, but internal conditions often have no relationship to reality unless a more complex model is assumed. It is very important when using this model to recognise that voltage V_4 may not exist as a physical voltage in the real amplifier and thus has limited significance. It's easily seen that an amplifier with high open-loop ouput impedance will produce a very large value of V_4 in the model when supplying high output currents, yet in a real amplifier no such voltage swings substantially in excess of the output voltage exist. Failure to recognise this probably contributed to earlier erroneous conclusions where much attention was paid to the activity of V_4, with the suggestion that large values could lead to increased intermodulation in a real amplifier. [1]

In the Norton model of Fig. 2, the open-loop amplifier is represented as a voltage-controlled current source with transconductance g_m in parallel with Z_{ol}. Notice that in this equally-valid model there is no unrealistically large internal node voltage swing, as with V_4. However, an unrealistic

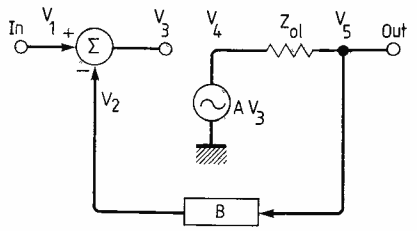

Fig. 2. Norton amplifier model where the open-loop amplifier is represented as a current source equal to the short-circuit output current in parallel with an impedance equal to the open-loop output impedance.

internal current flow can occur in the current source when an amplifier with low open-loop output impedance produces a substantial output voltage swing. As before, caution is required in interpreting conditions inside the model.

Here the feedback factor is $g_mZ_{ol}B$ and the closed-loop output impedance is

$$Z_{cl}=Z_{ol}\|1/g_mB\approx1/g_mB. \qquad (2)$$

As before, when Z_{cl} is significatly less than Z_{ol}, the second term is dominant, and we see that feedback factor and Z_{ol} do not appear in this term. As Z_{ol} is increased, the feedback factor is also increased, leaving the closed-loop output impedance unchanged if the insignificant first term is ignored.

Insight provided by the model of Fig. 2 seems more relevant to power amplifier design because power amplifiers with high open-loop output impedances tend to have commensurately higher no-load feedback factors if they are constructed with the same number of active devices; this effect is handled explicitly by this model. The Norton model also applies well to amplifiers employing common-emitter output stages. The total net transconductance characteristic, g_m, also seems most relevent to interface intermodulation because here we are concerned with error correction signals which operate by controlling output current to meet the demands of the reaction current to keep output voltage from changing.

A slightly more detailed Norton-like low-frequency model of a power amplifier is shown in Fig. 3 where internal conditions are more realistic. In this model, the open-loop amplifier consists of three active stages: an input voltage amplifier A_1, an intermediate transconductance stage g_{m1}, and an output current amplifier stage h_{fe}. These correspond loosely to the input differential amplifier, the common-emitter driver, and the common-collector double or triple-Darlington output stage of a typical power amplifier. Typical values are shown for a medium-quality amplifier yielding a Z_{ol} of 50 ohms and a damping factor of 100. We have

$$Z_{ol}\approx(Z_1/h_{fe})+R_e \qquad (3)$$

$$Z_{cl}\approx1/A_1g_{m1}h_{fe}B=1/g_mB. \qquad (4)$$

Notice that Z_1, which often is a very high impedance at low frequencies in designs using current source or active loading on the pre-driver, usually dominates in

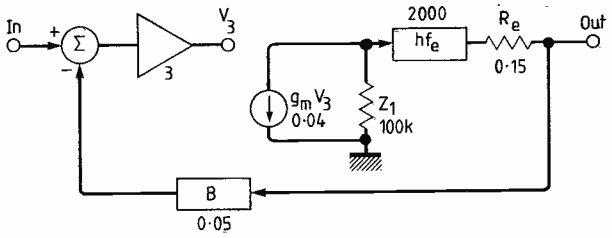

Fig. 3. More detailed Norton-like amplifier model which more accurately models real power amplifiers. Impedance Z_1 usually dominates in determining no-load feedback factor and open-loop output impedance.

determining Z_{ol}. Amplifier models constructed and measured in a previous study[1] had output stages driven by a low-impedance source and thus did not allow for the significant contribution of this term. It can be seen from this model that extremely high damping factors are easily achieved by using, for example, a triple-Darlington output stage with an h_{fe} of the order of 100,000.

We thus see that in either high or low Z_{ol} designs of equal gain and damping factor the level of the fed-back reaction signal is the same; in both cases it is inversely proportional to the amplifier's net transconductance.

But what of the distortion this reaction signal may cause in the forward path? It could be argued that the higher voltage gain of high Z_{ol} designs is less linear, given an equal number of active devices. While the higher feedback will compensate for this in terms of ordinary intermodulation and harmonic distortion, what about interface intermodulation? To answer this question we must recognise that the magnitude and linearity of net transconductance (not voltage gain) are the relevant parameters here because we are talking about distortion generated in correcting for a current injected at the output.

The effect of negative feedback on distortion is most easily understood by working backward from the output. We assume a perfect output and evaluate the input-referred distortion required to generate it, just as we do in calculating input-referred noise. Because the feedback signal under these conditions is perfect, the absolute level of the input-referred distortion is the same for either open or closed-loop conditions. Distortion *percentage* is reduced by feedback simply as a result of the larger pure component of the input signal required under closed-loop conditions. This technique is accurate when closed-loop distortion is small (<10%). It is important to choose the appropriate gain in referring a distortion product back to the input and to recognise that it may be frequency dependent. Of course, the linearity of that gain determines how much distortion is to be referred back to the input. In the case of interface intermodulation the gain in question is net transconductance.

Notice that a g_m of 250 with 10% non-linearity will result in the same input-referred distortion voltage as a g_m of 125 with 5% non-linearity. Both would produce a 2mV distortion voltage when a 5A current is being delivered; this is 0.2% relative to a 1V input signal level. For this reason the product of magnitude and linearity of net transconductance is the determining factor, regardless of amplifier topology, open-loop output impedance or feedback factor.

Different amplifiers optimally constructed with the same number of active devices will tend to have a net transconductance with the same magnitude-linearity product. In the model of Fig. 3, notice that the value of Z_1 has virtually no effect on the magnitude or linearity of net transconductance. The fact that we can go from a high Z_{ol}, high feedback design to a low Z_{ol}, low feedback design by merely changing Z_1 without affecting the transconductance characteristic, and thus intermodulation, illustrates that open-loop output impedance and feedback factor have no bearing on interface intermodulation if the damping factor is held constant. Notice that no assumptions have been made about any perceived "market-place reality" in regard to ordinary closed-loop intermodulation performance or about open-loop voltage gain linearity.

Contemporary amplifier analysis

To lend perspective to the previous section and to confirm some of the conclusions, a simple contemporary power amplifier was constructed and subjected to analysis by computer simulation and laboratory measurement, Fig. 4. Though simpler than many current amplifier designs, it is representative of contemporary topology. The circuit incorporates the classic topolgy of the differential input stage, the common-emitter driver stage with current-source load, and the complementary Darlington output stage. Emitter degeneration provided by R_3 and R_4 allows a respectable slew rate of about 25V/μs for good transient intermodulation performance. Capacitor C_3 provides Miller-effect feedback compensation for a stable closed-loop bandwidth of about 1MHz. Transistors 3 to 5 form a Darlington/cascode stage which provides good linearity and high output impedance. Notice that this amplifier is well represented by the model of Fig. 3.

To test the findings of the previous section, we examine two versions of this amplifier design identical in every respect except that one is characterized by high open-loop output impedance and high feedback factor (case A), while the other is characterized by low open-loop output impedance and low feedback factor (case B). The differing characteristics of the two amplifiers are determined by collecter load resistors R_{11} and R_{12}; the value of these resistors is the only circuit difference. This technique guarantees that only the characteristics under discussion are influential in the comparison. A very high value 10MΩ achieves the high-feedback, high-Z_{ol} case A, while a low value (10kΩ) achieves the low-feedback, low-Z_{ol} case B.

Computer simulations were first run to confirm the small-signal performance of both designs. The results are tabulated below, and show no surprises. As expected, closed-loop output impedance is about the same in both cases, corresponding to a damping factor of about 100.

	Feed-back	Output Z o.l.	Output Z c.l.	Bandwidth o.l.	Bandwidth c.l.
Case A	61dB	71Ω	7mΩ	800Hz	1MHz
Case B	28dB	1.8Ω	8mΩ	30kHz	1MHz

Computer simulations were next used to evaluate interface intermodulation per-

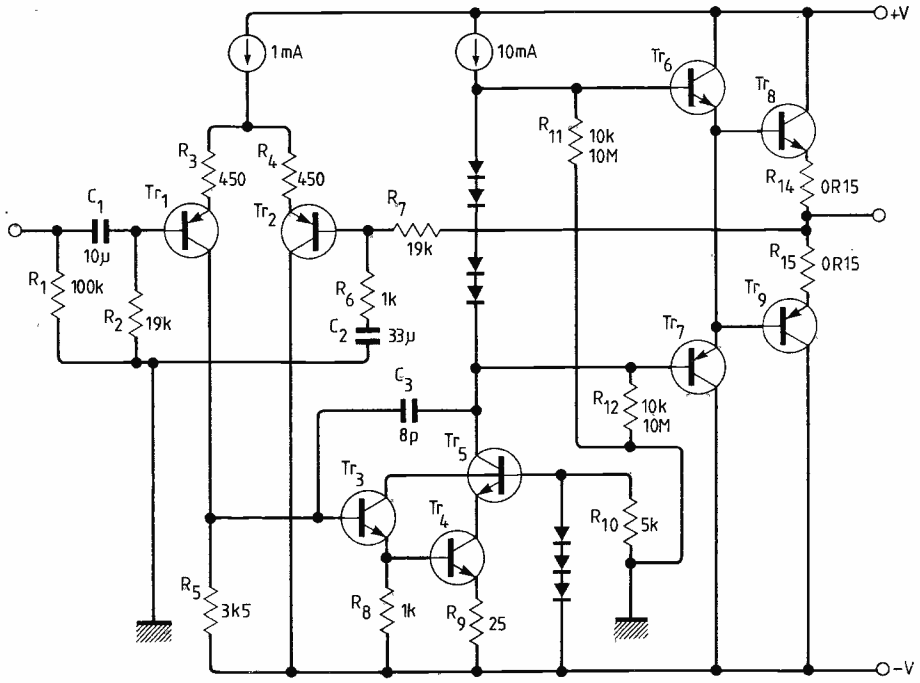

Fig. 4. Simple contemporary power amplifier used for computer simulations and laboratory measurements. Choice of R_{11} and R_{12} provides a high-feedback, high-Z_{ol} design or a low-feedback, low-Z_{ol} design with the same cost, gain and damping factor.

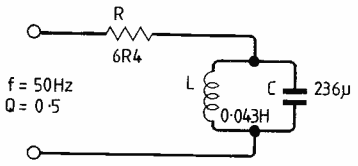

Fig. 5. Simplified loudspeaker model used for the computer simulations. Although a speaker can act as an active signal source (a microphone), this effect is so small that the speaker can be accurately modelled as a passive RLC load.

formance of the two amplifier designs by looking at internal and external signals as functions of time under various conditions. The plots generated by the transient analysis program are like what would be seen on an oscilloscope display if the experiments were done with a real amplifier.

Both 56V pk-pk sinewaves at 50Hz and squarewaves at 2kHz were injected into the outputs of the amplifiers through an eight-ohm resistor with no signal input to the amplifier in two different experiments. This permitted observations of the circulating error signals at various points inside the amplifiers. In both experiments the waveshapes and magnitudes were virtually identical for both cases at all nodes observed. (In fact, case B levels were about 10% higher due to the slight additional error current which must be supplied to R_{11} and R_{12} when they are 10kΩ.)

Now look at the situation where the amplifier delivers a large voltage step into a simple RLC model of a loudspeaker, like the one shown in Fig. 5. The parameters in the model have been chosen to represent a typical loudspeaker with a d.c. resistance of 6.4Ω, a fundamental system resonance of 50Hz, and a Q of about 0.5.

Fig. 6 shows the signals of interest for cases A and B: amplifier output voltage, load current, output stage drive voltage, Tr_5 collector current, and Tr_1 collector current. The load current rises suddenly to that which would flow into the 6.4Ω d.c. resistance alone, dips deeply to about one-fourth this value, and gradually rises back to the earlier resistive value. The deepest point in the valley prepresents the point of maximum cone velocity and thus maximum back-e.m.f. acting to lessen current flow. Although the dip looks like a large "oscillation", keep in mind that, at least for this experiment, it represents *decreased* amplifier taxation. The internal amplifier signal excursions for case A are generally *smaller* than for case B. This is primarily due to the fact that R_{11} and R_{12} consume a substantial amount of drive current in case B.

Another experiment, using a different type of pulse input, shows that under certain conditions the RLC load is not as innocent as it appears above. The unusual driving waveform shown in the top trace of Fig. 7 was deliberately chosen to maximize the expected peak load current by reversing the drive signal polarity when the back-e.m.f. will act to *increase* current flow. While an amplifier delivering this waveform to an 8Ω resistive load would see a peak load current of 3.5A, the RLC load develops a peak current of 10A! While the probability and extent of this kind of occurence in the real world with music may be argued, the exercise does provide food for thought. As before, this situation is handled similarly by the case A and case B amplifiers, so feedback factor and open-loop output impedance are not at issue here.

As further verification of these findings, the power amplifier of Fig. 4 was constructed and tested for case A and case B conditions. A similar design of the same complexity using a common-emitter output stage with a Z_{ol} of 1500Ω was also

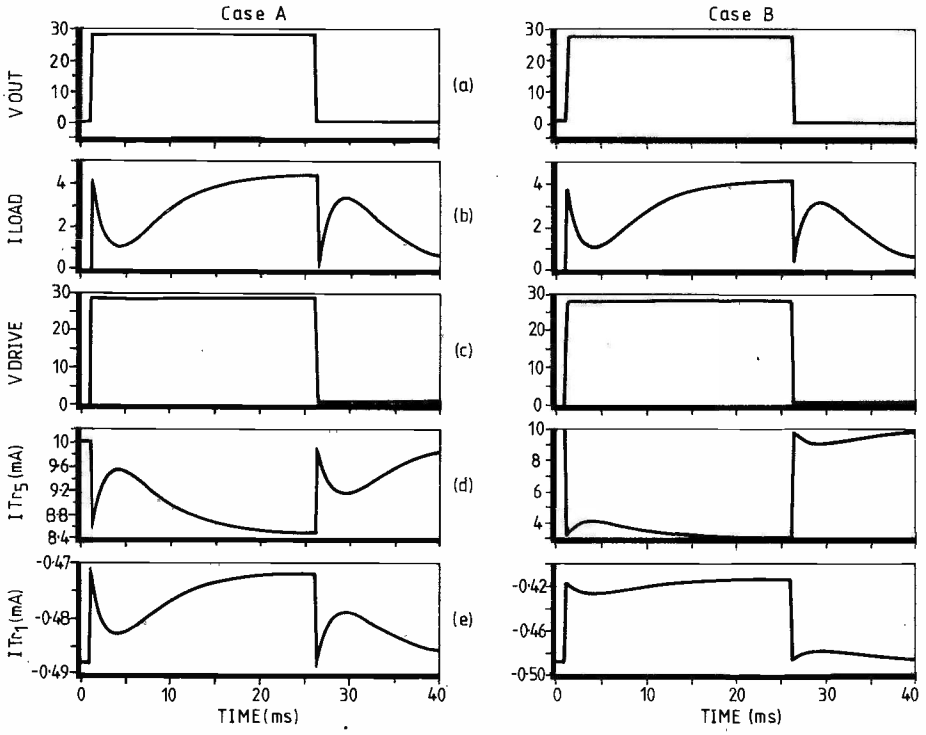

Fig. 6. Amplifier signals when driving a step function into the RLC load of Fig. 5: a) amplifier output voltage; b) load current; c) drive voltage to output stage; d) pre-driver collector current; e) input stage collector current. Note different scales for (d) and (e) for cases A (left) and B (right).

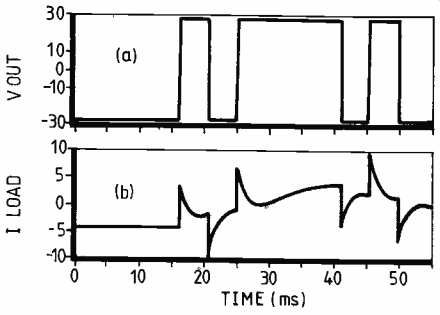

Fig. 7. Special pulse signal into RLC load illustrates unusually large currents which can flow under certain conditions: a) amplifier output voltage; b) load current. While not really an intermodulation issue, this does illustrate the need for high current capability in the power amplifier.

tested as case C. All three cases exhibited the same cost, closed-loop gain and damping factor. The amplifiers clipped at a level of 50W into an 8Ω load. They were first tested for SMPTE intermodulation (60Hz and 6kHz, 4:1) at a level of 45W. Test results are tabulated below. The higher case B intermodulation is directly attributable to increased exponential base-emitter distortion in the pre-driver, where substantially larger signal current swings are involved in satisfying the current requirements of the low-value case B collector load resistors.

	Output Z (Ω)	Intermodulation (%) SMPTE	Interface
Case A	7.1	0.1	0.052
Case B	1.8	0.3	0.063
Case C	1500	0.08	0.063

Interface intermodulation was next measured in a manner equivalent to the procedure outlined in reference 1. Equal-level 1000 and 60Hz signals were applied to opposite ends of an 8Ω load resistor by the amplifier under test and a second power amplifier. A spectrum analyzer was placed across the output of the amplifier under test and the r.m.s. sum of the distortion products was referred to the 1kHz level. The operating level of each amplifier was 25W. The similar levels of interface intermodulation in all three cases confirm that open-loop output impedance and feedback factor have virtually nothing to do with it in amplifiers properly constructed at the same cost.

References

1. Otala, M., J. Lammasniemi, Intermodulation at the amplifier-loudspeaker interface, *Wireless World*, November and December, 1980.
2. Jung, W. G., M. L. Stephens, C. C. Todd An Overview of sid and tim, *Audio*, vol.63, June, July and August, 1979.
3. Garde, P., Transient distortion in feedback amplifiers, *J. Audio Eng. Soc.*, vol.26, May 1978, pp. 314-321.
4. Cordell, R. R., Another view of tim, *Audio*, vol.64, February 1980, pp.38-49, March 1980, pp.39-42.
5. Cordell, R. R., open-loop output impedance and interface intermodulation distortion in audio power amplifiers, 64th AES Convention, New York, 1979, preprint 1537.

NEWS

No delay for cellular radio

A national cellular radio-telephone service provided by Racal-Millicom operating in competition with Sectel, the British Telecom/Securicor consortium, is given the go-ahead. Secretary of State for Industry Patrick Jenkin has confirmed his provisional decision to licence a second national cellular radio system and authorised the DoI to commence negotiations with Racal with a view to the early grant of a licence.

In answer to a parliamentary question, Under-Secretary of State for Industry John Butcher said "The availability of cheap hand-held equipment will have particular benefits for small firms and self-employed persons . . . the arrangements I am announcing will ensure that instant access to mobile communications will soon be within the reach of anybody who needs it. The Department's advisory panel on telecommunications liberalisation unanimously endorses SRI's recommendation that Racal's bid meets all the conditions laid down in guidelines and provides not only the greatest industrial benefits but also the best prospects for early national coverage by cellular radio".

The announcement came in early December ten days after SRI International, appointed by DoI to assess applications for the licence, presented their findings. Their evaluation took into account potential industrial benefits including employment, provision of a national service and ability to provide a true duopoly with BT, as well as the applicant's national credibility, integrity and even-handedness.

Racal-Millicom's aim is to provide coverage for 64% of the land mass and 90% of the population within five years. They intend to spend £45m initially, to provide 75 cells and 10 remote-switch groups by 1985, rising to a total of £200m in 1989 when 941 cells and 244 remote switches serving more than 250 000 subscribers are predicted. The company, comprising 80% Racal, 15% Millicom Inc., and 5% Hambros ATT Ltd, was one of three bidders invited to revise their proposals after SRI told the government on 28 October that they could not recommend any of the proposals in their present form. The other two applicants, presumably the smaller of the five companies (Metagate and Rushbridge), were not invited as they were already considered non-runners.

Choosing Racal-Millicom as holder of the second licence (Sectel will hold the first) does not imply which cellular radio technique will eventually be decided upon. "A decision on technology could not be made until the licensee was chosen" said Butcher, "each system was considered adequate so judgement was only made for the best bidder on other considerations." Negotiations between the two licence holders and other 'interested parties' will determine which system is chosen – unless agreement cannot be reached in which case the Secretary of State could intervene. The decision could be made within the next eight weeks.

"Two systems could run concurrently"

Speculation about which system may be chosen is rife, but talks between the two parties are not yet underway. A spokesman for BT said "We see no reason why two different systems cannot run concurrently provided that their frequencies and channel spacings coincide . . . the switching method used does not matter", which makes speculation even more difficult.

Racal's proposal included a technical section describing their improved version of the American-developed AMPS cellular communications method. AMPS was also preferred by Cellular Radio but National Radiophone Services opted for MATS-E developed in a joint venture by Philips, Pye Telecoms and the French CIT Alcatel. We reported last month that BT were thought to be looking into Nordic, a Scandinavian system developed in Sweden and operational since 1981; a recent report that BT has turned its attention to MATS-E is

● Cellular radio is a method of providing much more efficient use of a mobile-radio spectrum by dividing an area into cells each around 5km across and each with a low-power transmitter providing up to 100W, replacing the single high-power transmitter covering a large area used for conventional mobile radio services. This means that mobile units in the same area can use the same frequency without interfering with each other provided that they are in different cells. The new service will operate at much higher frequencies than those currently used.

Each cell base station is connected through the public switched network to a processing centre where a computer keeps tabs on each operational mobile unit. When a unit moves from one cell to another the computer scans adjacent cells using a separate channel to find the base station closest to the subscriber then switches the telephone link and allocates a free channel.

A subscriber can communicate with another subscriber in the same group of cells or in other group cells through a network-control switch (or switches). The user can also reach any wired telephone subscriber in the UK at local rates or any wired telephone subscriber in the world. Switching centres are planned by Racal at Edinburgh, Cardiff, Belfast, London, Manchester, Birmingham and Newcastle by 1985. BT say that limitations in the current service are most acute in London so this will be the first city to be served by cellular radio.

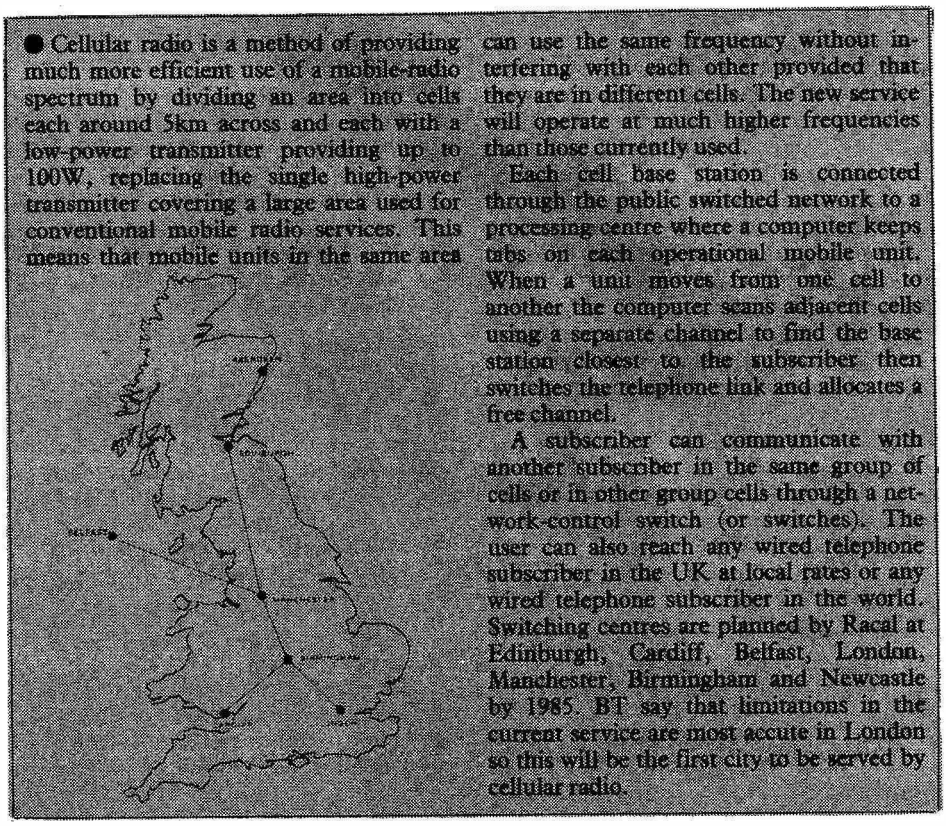

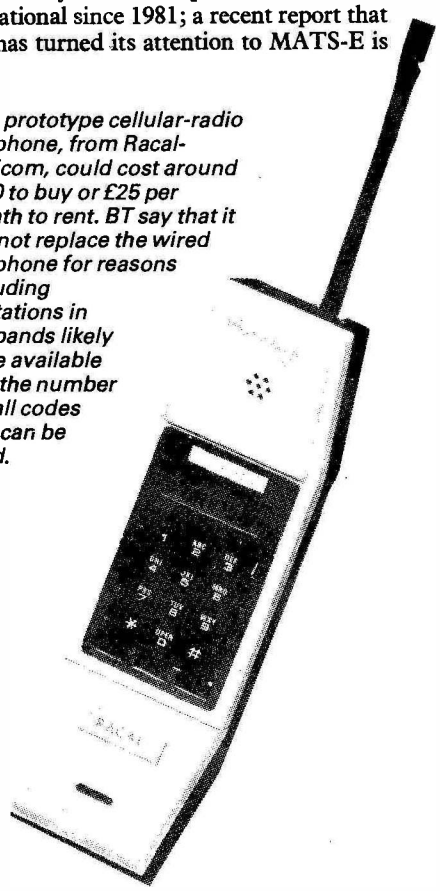

This prototype cellular-radio telephone, from Racal-Millicom, could cost around £700 to buy or £25 per month to rent. BT say that it will not replace the wired telephone for reasons including limitations in the bands likely to be available and the number of call codes that can be used.

claimed by them to be an exaggeration. The MATS-E system *is* being looked into by BT, but only as part of their overall assessment; they will not yet state their preference. MATS-E has not had field trials but a claim that it is the most spectrally efficient system, offering the largest subscriber capacity, was not contended by representatives of the other systems at a recent seminar on MATS-E cellular radio.

The European Conference of Postal and Telecommunications Administrations (CEPT) have proposed a European 900MHz cellular system for the next decade based on 25kHz channel spacing. Standard AMPS uses 30kHz channel spacing and Nordic currently operates on 450MHz so neither complies directly with this proposal – MATS-E is claimed to come the closest to these recommendations and to be the only system capable of handling a projected demand of 23 000 automatic mobile telephones in London by 1990. "AMPS and NMT (Nordic) systems would be channel-bound in 1987 and 1988 respectively" say Pye Telecom.

Both the DoI and Racal-Millicom place emphasis on the number of jobs likely to be created by cellular radio, with Racal estimating 6,000 jobs from their side by 1989 and the DoI claiming that up to 10,000 jobs could be created, presumably by including those likely to come from BT. The general view is that these figures may be overestimates. There is a possibility that by 1989, cellular radio may affect the workforce currently involved with mobile radio. Even so, who can complain at the prospects of anywhere near 6000 jobs for a mere £200m investment?

A recent report claims that the Home Office has agreed to allocate frequencies outside normal mobile radio bands for Philips' tests with MATS-E and suggests that there is a commitment to have a trial MATS-E system running by mid 1984 by a company other than Philips. Allocation of a 30MHz spectrum for cellular radio in the 854-960MHz band was confirmed by the Home Secretary last November.

Cells bright under the rising sun

Mobile telephones in Japan totalled 13000 in March of 1982 compared with 7000 in the same month of the previous year and current installation rates lead to a forecast of 22 000 subscribers by March 1983, according to a recent report on Japanese mobile telephone developments. Japan's 800MHz high-capacity cellular mobile telephone system, HCATS, was first installed at Tokyo in December 1979, and has been under development since 1967. Nippon Telephone and Telegraph have also completed feasibility trials with a lower-capacity cellular system to serve medium and small cities. The report, by Eurogestion KK, is available in the UK through IPI, 134 Holland Park Avenue, London W11 4UE.

Maritime radio reviewed

In attempts to cut losses running at £4m a year and exploit latest technology, proposals for reorganization of Britain's maritime communications service have been put to staff and unions concerned by British Telecom International. These proposals involve the closure of two maritime radio stations, the conversion of a further nine to operate under remote control, and staff reductions. Only two stations will be manned to receive calls and monitor the remote stations, Stonehaven Radio near Aberdeen and the long-range receiving centre at Burnham-on-Sea in Somerset. Two of four current long-range transmitting radio stations at Leafield in Oxford and Ongar in Essex will close under the plans.

According to BTI, these changes and further staff cuts in other sections including the Brearly development laboratory, "will not mean a reduction in service given to customers or affect the ability to handle distress calls." Some two-thirds of BTI's short and medium-range stations already operate under remote control, as do most of Europe's maritime radio stations say BTI. Factors leading to the review of maritime services include the depression in the UK shipping industry and a steep decline in the use of terrestrial radio services brought about by developments in communications technology – satellite services and telex. Around 200 of 1,000 people now employed in the maritime services are expected to lose their jobs.

3Mbyte micro-floppy within two years

A 3Mbyte/side 3½in floppy disc drive using perpendicular magnetic recording is scheduled for mass production within two years says Toshiba. This experimental product, they claim, "marks the world's first simultaneous development of a disc and drive for reading and writing information using p.m.r. Both Japanese and foreign manufacturers have been researching methods of adapting the p.m.r. concept for practical applications, but Toshiba is the first company to achieve this goal". These claims will no doubt cause concern at Vertimag's Minnesota base (see September 1982s news pages) as this company already claims to have demonstrated such a 5Mbyte floppy disc system which will sell for around $750, with production commencing in mid-1983.

Proposed in 1975 by Professor Iwasaki of Tohoku University, perpendicular magnetic recording increases storage density by using magnetic particles stood on end, as opposed to conventional methods where the particles are laid end-to-end and magnetised along the surface of a disc or tape. A major hurdle in manufacture has been the production of a surface capable of being magnitised in such a way. Toshiba have succeeded in sputtering a 0.5μm layer of chromium-cobalt alloy on both sides of a polyester-base film and developing a 0.4μm-gap ring-shaped head and new positioning mechanisms for the drive to make full use of the recording density available.

According to Vertimag, early hardware will offer three to five times the storage capacity of existing floppy-disc memories but Toshiba claim a 27-fold improvement for their device. Sony's current 3½in floppy-disc drive can hold 437Kbyte but could be said to be unconventional.

● Interference between adjacent bits on digital magnetic recordings can be greatly reduced by using transversal filters but such filters are usually considered impractical in this application because of their price. A theoretical demonstration at the Southampton University conference on video and data recording showed that a.s.w. transversal filters can be used to reduce bit interference, providing either greater packing density or an improved signal-to-noise ratio.

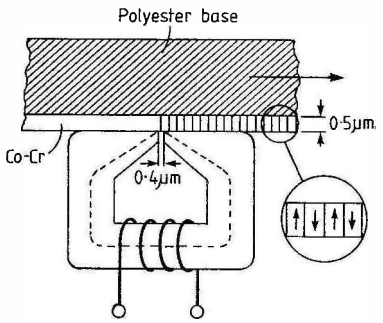

Representation of Toshiba's ring-shaped ferrite head and perpendicular recording. Linear recording density is around 2Kbit/mm on tracks spaced 176μm apart.

Torch approved

The first microcomputer to be fully approved by BT for connection to the public switched network is announced. Cambridge manufacturers of the computer, Torch, say that their micro has had similar approvals in the US and Canada and is currently being evaluated by European telecommunication authorities.

Two such computers operating as viewdata terminals have recently been on trial aboard a Cunard liner in an attempt to improve the handling of weather-forecast, stores and booking information and offer a more efficient mail and Prestel service for passengers. In a proposed system, information would be loaded into one micro from Cunard's mainframe and transmitted through a satellite to micros on board ships for storage or printing. The computer's mailing facility is said to transmit messages twenty times faster than standard Telex links.

Incorporating a 1200bit/s CCITT-standard modem with auto-dial/answer, the colour computer can run in teletext mode for viewdata or give an 80-column display for Telecom Gold electronic mail. Communication with other computers is through Econet, RS232 or the modem and interfaces for local or remote networking may be attached.

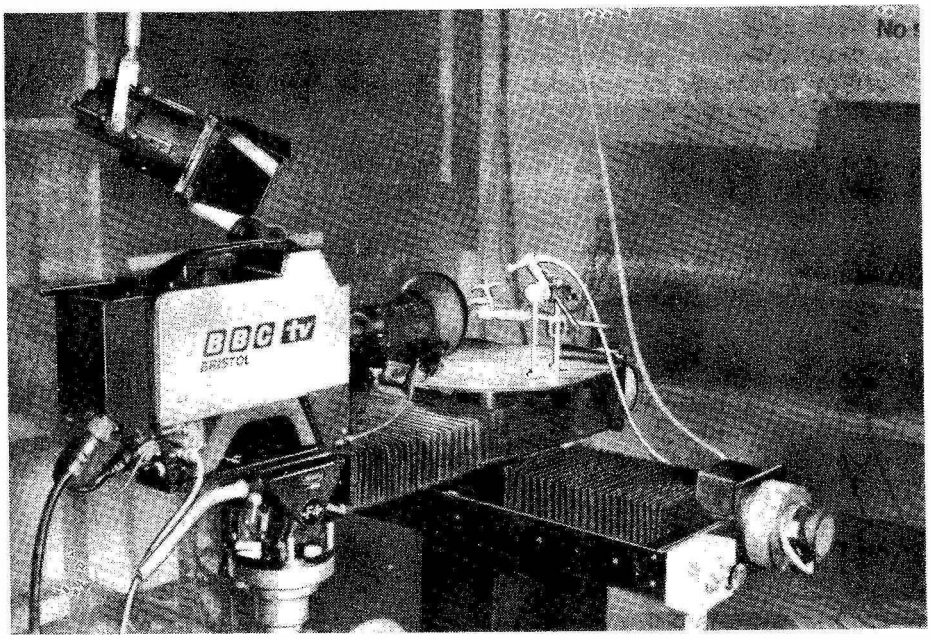

This positioning table for filming small entomological and botanical specimens was designed by engineers at BBC Bristol for the Natural History Unit. Housed in an area designated the Macro Studio (in a basement) linked to the BBC distribution network, the positioner has already been used for several nature programmes. Servo motors rotate the platform and move it along three axes according to commands from a separate control panel. To ensure that insects and plants don't shrivel up too quickly, 'cold' lighting and fibre-optic spot-lamps are used.

Solid modelling

In the mid-seventies a demonstration geometric-modelling system was jointly developed by Leeds and Rochester Universities in the hope that 'software vendors' would take up the work and make it commercially viable. To date, over seventy of these demonstration systems are used as research and teaching aids, but the software producers did not take the bait as expected. Because of this both universities, convinced of the value of their research, set up projects to develop industrially-viable geometric modelling systems.

In a paper presented at the Computer Graphics conference last October, Leeds University reported the progress of their industry-sponsored modelling project and predicted its future. Receiving financial support and experienced personnel from industries likely to use the research has resulted in software tuned to typical applications – rather than a package capable of being modified and providing a compromise.

The starting point was a detailed survey of parts likely to be modelled which also helped to provide design algorithms and input methods. Initial (1981) software provided Fortran-compatible parameterization, coordinate system, design editing features, representation conversion, and designer interaction, which enabled the modeller to be used for designing, analysing and drawing components, including the production of illustrations with perspective, hidden-line sections and exploded views. But the team is now working on modules to handle dimensions and tolerances. It is also looking into methods of generating finite-element meshes automatically. Molecular and dynamic modelling are projected, the last-mentioned to allow the designer to see the effects of an engine's changing crank angle for example.

The modeller's ability to define solid shapes and reliably compute whether bodies intersect is expected to bring it into the robotics field. Robots for handling both components and assembly operations will be modelled – not necessarily in the form shown on January's front cover. In numerically-controlled machining the system will present stock, component and tool-path models and aid the production of tapes, making this type of machine viable for producing smaller batches than is currently the case.

According to the paper, the use of geometric modellers in design rather than in planning or manufacture, is primarily to capture information at source. The future will see geometric modelling systems embedded in highly integrated design and manufacturing systems. To allow this incorporation and integration, the majority of models will be built by computer programs and not users.

Solid modelling – a tool for industry by G. T. Armstrong, A. de Pennington and J. S. Swift was presented at the Computer Graphics 82 Conference, proceedings of which are available from Online Conferences Ltd, Argyle House, Northwood Hills, Middlesex HA6 1TS.

January limit for new mobile frequencies

Trunked common-base station operators likely to make the best use of channels in a new u.h.f. land-mobile sub-band within 35 miles of London are invited to apply to the Home Office by 31 January. Three groups of channels are available and each operator selected will initially be offered three channels with potential room for expansion. More scope will be available for trunked common-base stations when the 405-line tv service closes and frequencies become available for land mobile use.

In a trunked mobile radio scheme, a group of users share a common pool of radio channels and a common base-station transmitter and receiver. Prospective applicants for one of the three initial frequency groups should apply to, Home Office (R2 Division), Room 708, Waterloo Bridge House, Waterloo Road, London SE1 (telephone 01-275 3284) by 31 January.

Payphone for the table

A tabletop payphone measuring 230mm square by 178mm high and weighing 3.2kg is available following successful trials. BT say that this, the country's smallest payphone, will be useful for "small businesses who want to provide their customers with a phone but not give away free calls." Among businesses expected to be attracted to the idea are garages, shops, surgeries (?), hairdressers, pubs and clubs. Designated Payphone 100, the unit may be switched to operate at normal call rates as a private phone using a key; when coin operated, higher call-box rates apply but the renter retains the extra cash paid. Only one line is required for the two modes of operation. Calls to the operator, except 999 calls, are inhibited when the telephone is set for coin operation to keep rental costs to a minimum say BT. Rental charge for the telephone – excluding line rental and an initial £32 installation cost – is £26.50 per quarter. Two, five, ten and 50p coins are accepted and unused coins are returned.

The 100 is designed for use with a socket system formerly only available to domestic

subscribers and recently made available to businesses. These sockets allow telephones to be moved from room to room and form part of an insulation-displacement wiring system introduced by BT to cut down installation times. Plug-in adaptors for answering machines, memory diallers and other attachments are under development.

AGI of Croydon manufacture the microprocessor controlled payphone. By mid-1980 all Britain's 77,000 public telephones will be replaced by electronic types and 300,000 rented payphones will be replaced by the end of the decade.

Strings for cordless telephones

Cordless telephones meeting Home Office specifications do not require a wireless telegraphy licence from 1 January but few of the telephones currently on sale or in use meet these requirements, say the Home Office. Offenders will suffer up to three months imprisonment and/or a £400 fine; the fine rises to £1000 this year under the Criminal Justice Act of 1982.

Arrangements for the introduction of a limited range of cordless telephones made jointly by the Home Office, the DoI and BT were announced in late August 1982 as part of the Government's programme for the liberalization of telecommunications (see News, November). To introduce a service quickly (with current technology) eight frequencies between 1632 and 1792kHz for base transmission have been paired with frequencies between 47.45 and 47.55MHz for handset transmission. "These short-life frequencies will be replaced by longer-term frequencies – probably in the 900MHz region – before the old ones are withdrawn" say the Home Office. Coincidentally, the 900MHz region is likely to be used for cellular radio.

A language for the new generation

With future multi processor systems and fifth-generation computers in mind Inmos together with the programming research group head at Oxford University have developed a programming language "based on the concepts of concurrency and communications." Anticipating the 1984 introduction of its Transputer – a building block for multi-processor systems such as fifth-generation computers – Inmos say "efficient design and implementation of these systems is not possible with current languages whose designers never intended them for such applications. Occam was created to meet these needs". The director of the research group, Professor Tony Hoare, is noted for his concern over the unnecessary elaboration of computer languages.

Demonstrating an easily understood and compiled programming language for future multi-processor systems, this partial program shows how the speaking tea maker depicted may be controlled. A network of the tea maker is represented in the program; elements of the system are assigned processes and interaction connections between elements are represented by channels. Individual processes already formed are combined in this controller process by declaring local variables. WHILE and ALT statements determine the alternative used by the controller.

```
VAR alarm.time, brewing :: 0, FALSE
WHILE TRUE
  ALT
    buttons ? request
      IF
        (request = tea.please) AND NOT brewing
          PAR
            brewer ! make.tea
            brewing := TRUE
        request = time.please
          speaker ! say.time, NOW
    made ?
      SEQ
        speaker ! say.message, tea.made
        brewer ! pour.tea
        brewing := FALSE
    WAIT AFTER alarm.time
      SEQ
        alarm.time := alarm.time + one.day
        speaker ! say.message, good.morning
        IF
          NOT brewing
            PAR
              brewer ! make.tea
              brewing := TRUE
```

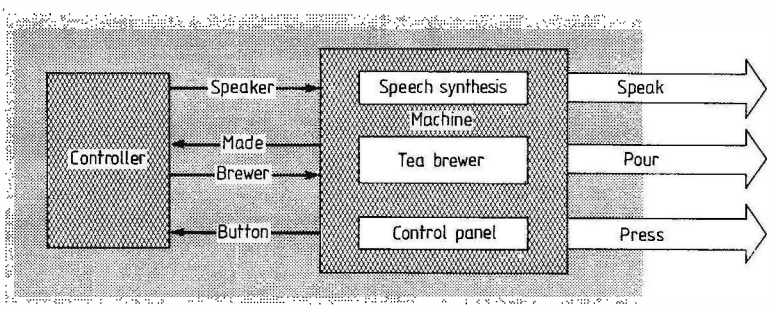

Two-metre transceiver

This synthesized voltage-controlled oscillator together with 9MHz s.s.b. transceiver and f.m. exciter form part of a 146MHz-band multi-mode transceiver with microprocessor control. A synthesizer logic circuit completes last month's description of module five.

by T. D. Forrester, G8GIW

Module 6 consists of a fet voltage-controlled oscillator with an emitter follower, Tr_{601}, and a class A amplifier, Tr_{602}, to lift the level to 0dBm (1mW). Housed in the same enclosure as the synthesizer logic of module 5, this circuit board also incorporates three power switches.

Transistors 603 and 604 form a single-pole change-over switch, the output of the former feeding the s.s.b. receiver and the latter providing a supply regulated at 6V by IC_{600} for the s.s.b. transmit exciter. The output from Tr_{603} is regulated on the s.s.b. receiver board as this section requires a low-impedance supply. Transistor 605 feeds the f.m. transmit exciter; a 9V zener diode on the exciter board regulates this supply.

These power switches are supplied through the mode switch so that $Tr_{603,604}$ operate when s.s.b. is selected and Tr_{605} operates when f.m. is selected. They are mounted directly on the p.c.b. and do not require heat sinks.

Initial adjustment of the v.c.o. is carried out by setting the control voltage to approximately 7V through a potentiometer and adjusting L_{601} to give 136MHz. When the microprocessor and control logic sections to be described are connected, adjusting L_{601} should cause variations in the control voltage. If the microprocessor section is not available, careful tuning of the v.c.o. should allow resolution of signals in the band. The full sweep of 135 to 137MHz should be obtained with a voltage swing of 1.5 to 13V.

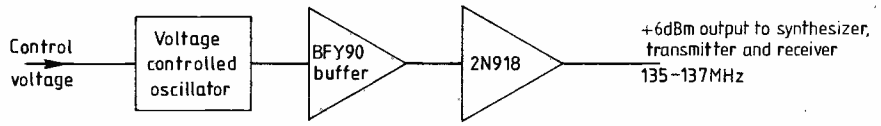

Voltage-controlled oscillator block diagram. A sweep from 135 to 137MHz is obtained with a control voltage swing of 1.5 to 13V.

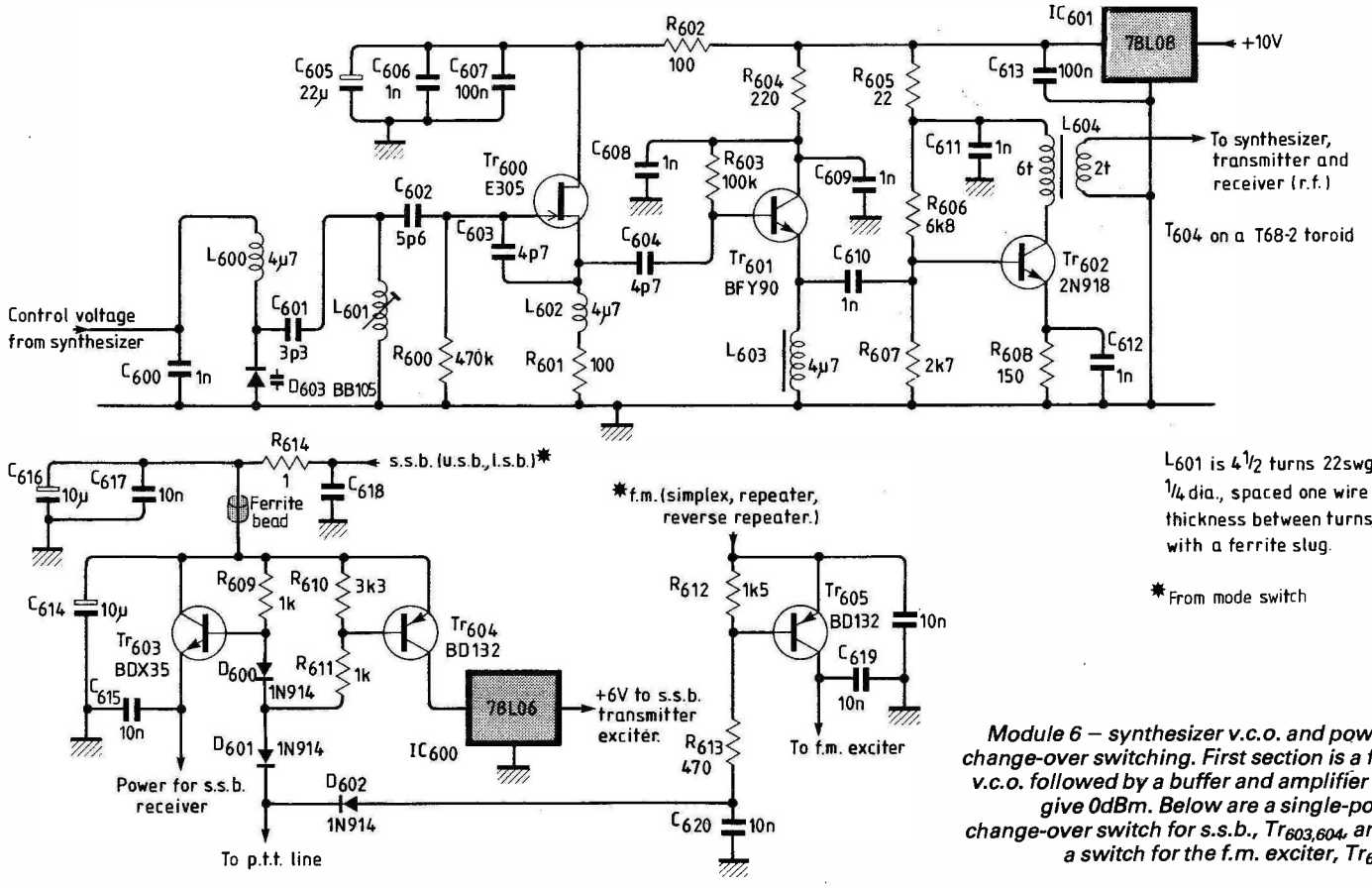

Module 6 – synthesizer v.c.o. and power change-over switching. First section is a fet v.c.o. followed by a buffer and amplifier to give 0dBm. Below are a single-pole change-over switch for s.s.b., $Tr_{603,604}$, and a switch for the f.m. exciter, Tr_{605}.

Components

Resistors

R600	470k
R601, R602, R703, R715, R723, R724	100
R603	100k
R604	220
R605	22
R606	6.8k
R607	2.7k
R608	150
R609, R611, R701, R714, R720, R721	1k
R610	3.3k
R612	1.5k
R613	470
R614	1
R700, R702	100k
R704	1k sub-min preset
R705	5k sub-min preset
R706, R708 R711, R726, R736, R740	470
R707	47
R712	18k
R713, R716, R729, R730, R734, R739	10k
R716, R717	22k
R719	27k
R722	47k
R725, R735	2k sub-min preset
R727, R737	3.9k
R728, R738	68k
R731	2.2k
R732, R733	4.7k
R741	68

Capacitors

C600, C606, C608, C609, C610, C611, C612, C751	1n disc
C601	3.3p disc
C602	5.6p disc
C603, C604	4.7p disc
C605, C744, C745, C747, C749	22µ tantalum, 16V
C607, C613, C703, C707, C709, C710, C713, C714, C722, C726, C732, C736, C739, C743	100n disc
C614, C616, C701, C731	10µ tantalum 16V
C615, C617, C618, C619, C620, C706, C711, C715, C716, C717, C737, C742	10n disc
C700, C723, C733, C734, C748, C750	2.2µ tantalum, 16V
C702, C704, C746	4.7µ tantalum, 16V
C705, C712, C720, C721, C724, C725, C735, C740, C741	100p disc
C708, C738	47µ tantalum, 6.3V
C718, C719	22p typ. (s.o.t.)
C727	39p disc
C728, C729	100µ tantalum, 6.3V
C730	50µ tantalum, 6.3V

Transistors

Q600	E305
Q601	BFY90
Q602	2N918
Q603	BDX36
Q604, Q605	BD132
Q700	BC109
Q701	BC108
Q702-704	2N3707

Diodes

D600, D601, D602, D700, D701, D702,	

continued over

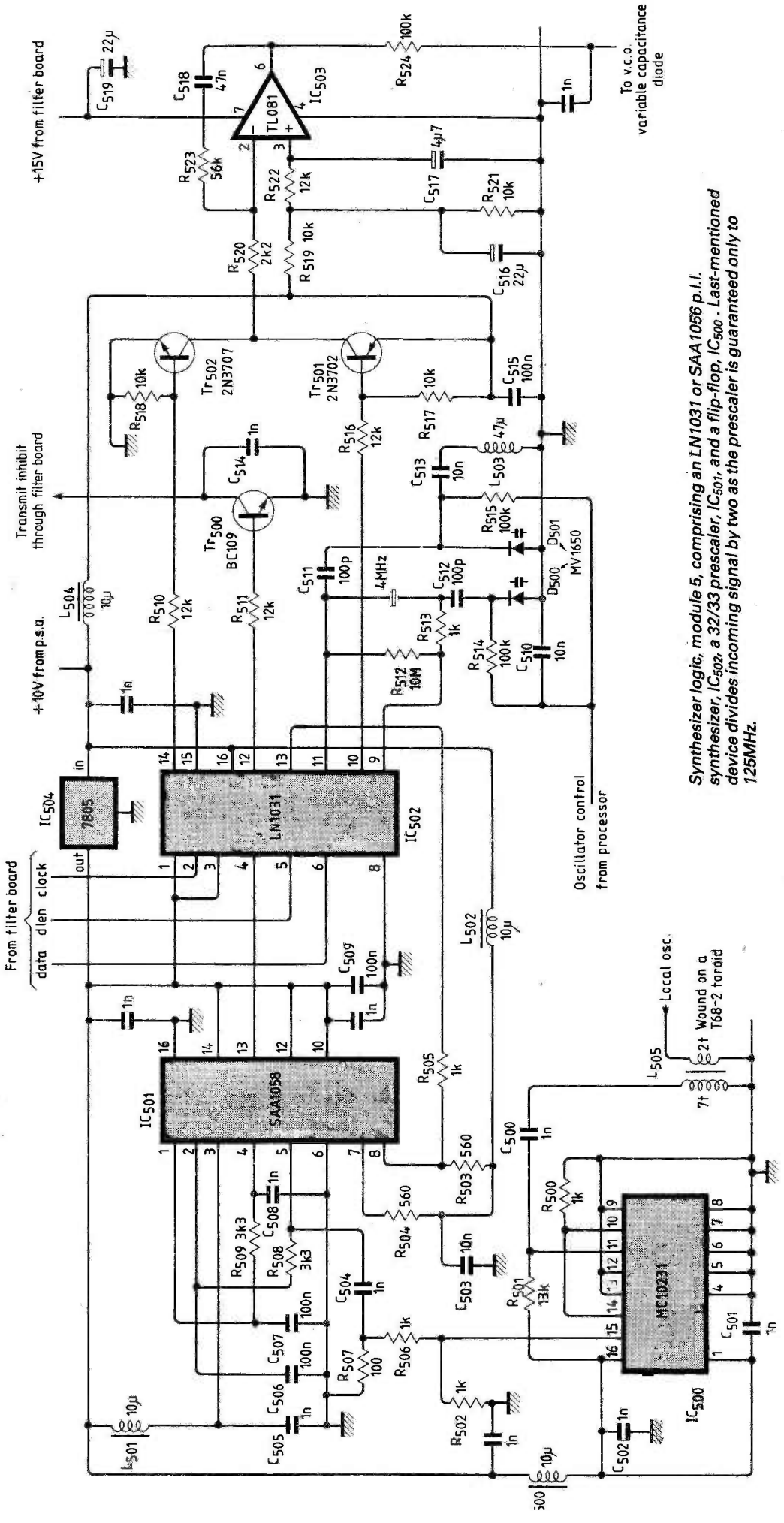

Synthesizer logic, module 5, comprising an LN1031 or SAA1056 p.l.l. synthesizer, IC_{502}, a 32/33 prescaler, IC_{501}, and a flip-flop, IC_{500}. Last-mentioned device divides incoming signal by two as the prescaler is guaranteed only to 125MHz.

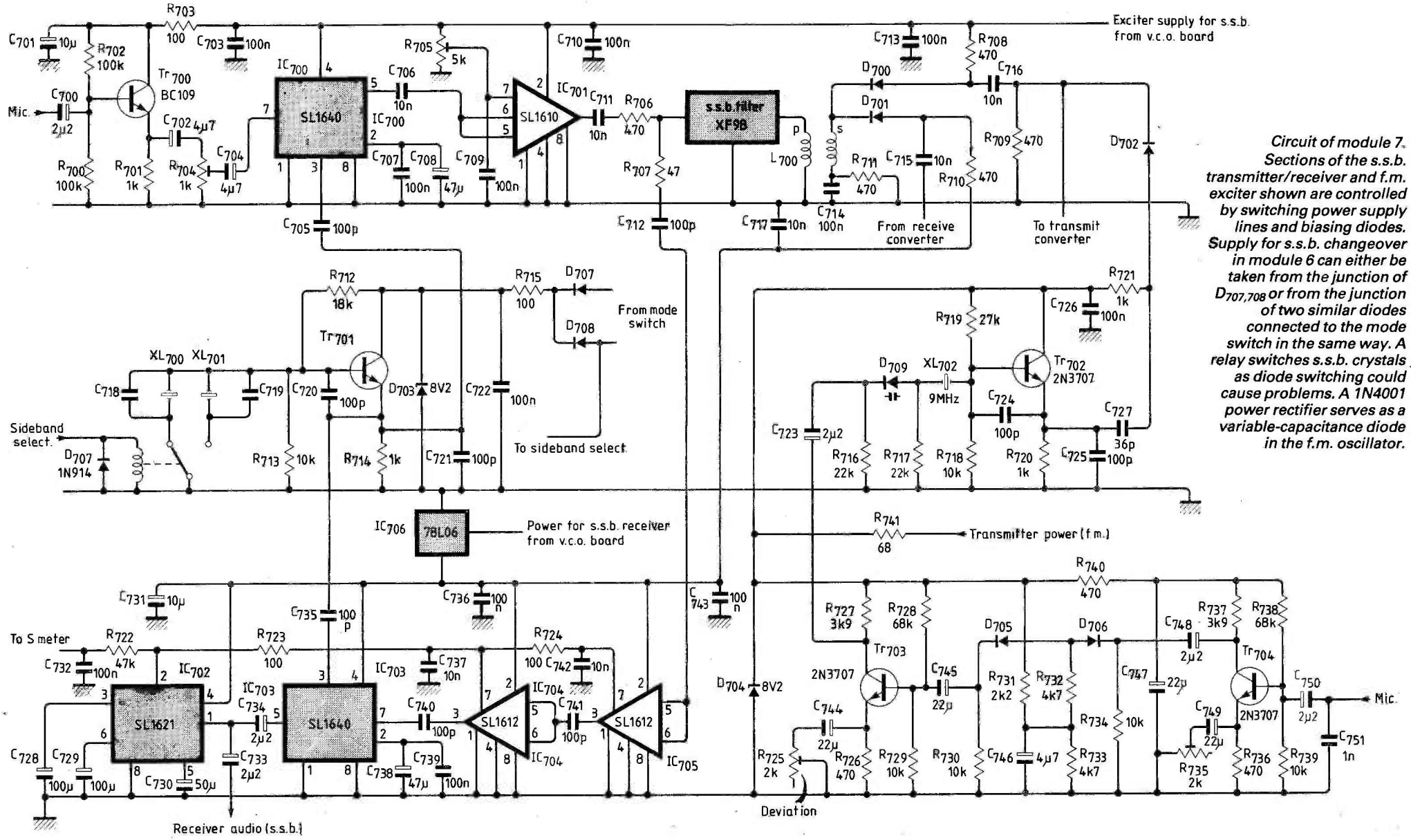

Circuit of module 7. Sections of the s.s.b. transmitter/receiver and f.m. exciter shown are controlled by switching power supply lines and biasing diodes. Supply for s.s.b. changeover in module 6 can either be taken from the junction of $D_{707,708}$ or from the junction of two similar diodes connected to the mode switch in the same way. A relay switches s.s.b. crystals as diode switching could cause problems. A 1N4001 power rectifier serves as a variable-capacitance diode in the f.m. oscillator.

Components continued

705-708	1N914		tween turns, slug tuned
603	BB105	604	6 turns primary, 2 turns secondary, 30 s.w.g. on T68-2 toroid
703, 704	8.2V zener, 400mW	700	4 turns primary, 2 turns secondary, on T68-2 toroid
709	1N4001		
Integrated circuits			
600, 706	78L06	Crystals 700, 701 and 702 are all 9MHz for l.s.b., u.s.b. and f.m. respectively; the crystal filter is type XF9B by KVG available from GE Electronics Ltd, 182 Campden Hill Road, London W8, for £42.86. Interface Quartz Devices of 29 Market Street, Crewkerne, Somerset TA18 7JU, have what they claim is an equivalent of the XF9B, the IQXF-90H-2.4 at £24 including the u.s.b./l.s.b. crystals and sockets. Resistors are ¼W, 5% types.	
601	78L08		
700, 703	SL1640		
701	SL1610		
702	SL1621		
704, 705	SL1612		
Inductors			
600, 602, 603	4.7μ sub-min fixed		
601	4½ turns with 22 s.w.g., ¼in i.d., 1 wire thickness be-		

As with the other modules, all signals and supply lines must be filtered using 1nF lead-through capacitors attached to the metal enclosure to remove r.f. feedback problems. Small-diameter coaxial cables and connectors should be used for all lines carrying r.f. signals. Thorough filtering and decoupling can save a lot of time and money. Any shortcomings in the synthesizer logic and v.c.o. sections will degrade both transmitter and receiver performance so these areas require attention.

9MHz s.s.b. transceiver/f.m. exciter — module 7

The heart of the s.s.b. transmitter/receiver and f.m. receiver breaks down into the following sections

- s.s.b. carrier oscillator, Tr_{701}
- s.s.b. generator, Tr_{700} and $IC_{700,701}$
- s.s.b. receiver, $IC_{702\text{-}705}$
- f.m. carrier oscillator, Tr_{702}
- f.m. microphone preamplifier and limiter, $Tr_{703,704}$ and $D_{705,706}$.

Thus broken down, the circuit should be easily understood. The s.s.b. transmitter/receiver circuits are based on the proven Plessey SL1600 series and require little explanation, except perhaps for the receiver-a.g.c. generator, IC_{702}, has a low-impedance power supply; this is provided by a 6V regulator, IC_{706}, mounted on the p.c.b. This 6V line is well decoupled with C_{731}, C_{736} and C_{743}.

When power is applied to the s.s.b. receiver current also flows through R_{710} and D_{701} so coupling the receiver front-end to the s.s.b. filter through C_{715}, D_{701} and L_{700}. In the s.s.b. receiver approximately 68db of i.f. gain is provided by IC_{705} and IC_{704}. The signal is demodulated in IC_{703} and the resulting a.f. signal fed to IC_{702} to produce an a.g.c. voltage for IC_{704} and IC_{705} and drive the S-meter on s.s.b. Transistor 701 is the s.s.b. carrier-oscillator transistor which is used both for transmitting and receiving. Frequencies of the crystals for l.s.b. and u.s.b. are trimmed by C_{718} and C_{719} respectively to the frequencies shown on the crystals; variable trimmers could be fitted, but I prefer to set the frequency once and for all on a frequency meter and use fixed capacitors, so removing the temptation to twiddle.

Power feed for Tr_{701} is controlled by the mode switch, the u.s.b., l.s.b. positions of which are connected to a diode OR gate, D_{707} and D_{708}, to feed power both to Tr_{701} and the s.s.b.-power change-over switch in module 6. A miniature relay selects the crystal for either l.s.b. or u.s.b., as a diode switch at this point can be troublesome. The s.s.b. exciter is simple, using Tr_{700} as an emitter-follower microphone preamplifier to provide IC_{700} with a low source impedance. Voltage gain is not necessary in Tr_{700} as IC_{700} requires a maximum of 100mV p-p which is less than most microphones provide. Level adjustment is made using R_{704}.

Carrier signal through C_{705} feeds IC_{700} which produces d.s.b. at pin 5; carrier balance in this i.c. is typically −40dB, but if this figure is not reached then the potentiometer modification shown can be used.

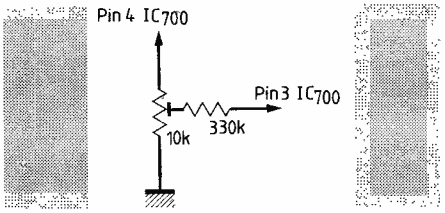

This low level d.s.b. signal is then amplified by IC_{701} before being converted to s.s.b. by the crystal filter. The KVG XF9B filter used in the prototype is expensive but it gives good results and is well worth the extra cost. The s.s.b. signal from the crystal filter is matched to approximately 50Ω by L_{700} before passing through D_{700}, biased on by current through R_{708}, and on to the transmit converter (module 2). Resistor 705 adjusts the gain of IC_{701} and should be set to prevent 'flat topping' in the transmit-converter final stages.

The f.m. microphone preamplifier and limiter is formed by Tr_{704}, D_{706}, D_{705} and Tr_{703}. Microphone gain is set using R_{735} while R_{725} sets the deviation; normally a 5V p-p audio signal is required on the collector of Tr_{703} for 4kHz deviation.

Two unusual features of the f.m. exciter are that it uses 9MHz and that the variable-capacitance diode is a 1N4001 power rectifier. As there is no frequency multiplication, 4kHz deviation is required from the 9MHz crystal; this is not as difficult as it might seem. Using the 9MHz f.m.-i.f. strip, it it possible to monitor the 9MHz signal and adjust deviation for best quality.

When assembling the components for this module, care is required as in one or two places space is limited. It is a good idea to break convention and fit the i.cs first.

To be continued

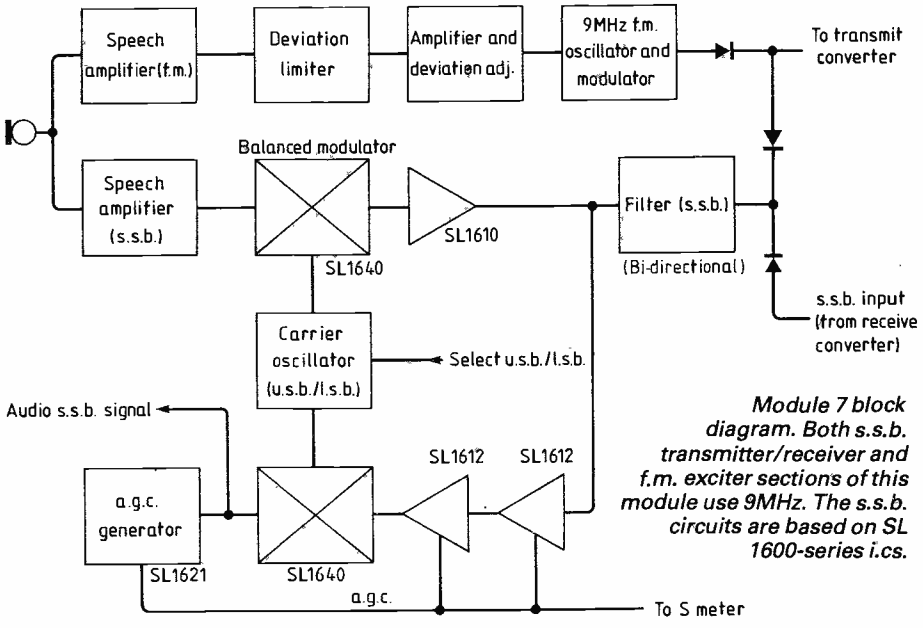

Module 7 block diagram. Both s.s.b. transmitter/receiver and f.m. exciter sections of this module use 9MHz. The s.s.b. circuits are based on SL 1600-series i.cs.

Photocopies of track diagrams and component-position sketches for the first four modules can be obtained by sending an s.a.e. to Wireless World Transceiver, Room L303, Quadrant House, The Quadrant, Sutton, Surrey SM2 5AS.

COMMUNICATIONS

The annual lecture of the Royal Signals Institution, given last November by Professor Sir Ronald Mason, Chief Scientific Advisor to the Ministry of Defence, certainly maintained the high level of interest that has come to be associated with this event. He argued fluently and persuasively that the skilful use of new technology to improve battlefield radio communications could multiply the effectiveness of a combat force. With good C³I (command, control, combat communications and intelligence) David could stand up to Goliath. God, it seems, may no longer be on the side of the big battalions but smiles benignly on frequency-hopping, spread-spectrum, packet networks, target sensors and target decoys, tactical satellite communications (down to the vehicle and manpack level) and "stealth" technology for rendering aircraft and other targets virtually invisible to radar.

Sir Ronald established a precedent by bringing in industry to demonstrate the virtues of some recent products: the Racal Jaguar V digital speech and data radio sets with frequency-hopping; STL's "Navstar" satellite navigation system planned to give world-wide all-weather coverage, providing accurate three-dimensional position and velocity information; a hand-held jammer and its antidote in the form of the new automatic "ICE" antenna nuller from Plessey; and Marconi's interesting Bragg-cell spectrum analyser that can provide continuous, instantaneous panoramic display of microwave signals, including the fastest frequency hoppers and presumably opening the way to more effective interception of (and direction finding on) hopping signals.

But there were two important topics which Sir Ronald appeared to avoid until they were raised from the floor. One was the question of survivability of communications systems in respect of the electromagnetic pulses arising from the explosion of nuclear devices in the upper atmosphere and the similar problem of whether satellite communications systems can be considered reliable against a sophisticated enemy in the light of anti-satellite weapons development and/or determined jamming.

The other difficult question concerned the wide price differentials between military, civil "professional" and civil "consumer" electronics. It was pointed out that some video games now use technology as complex as that found in advanced military systems, yet are sold at a tiny fraction of the cost. Sir Ronald suggested that troops in the Falklands would not have been happy with cheap plastic handsets – though it could be argued that in practice they did not benefit much from the full-specification signals equipment that went down, unused, in the Atlantic Conveyor. He considered that a greater share of the total defence budget could usefully be spent on C³I equipment; a viewpoint with which few in the audience seemed likely to disagree, although there exists a powerful "hard-kill" lobby which believes more in electronics weapon systems than improved communications.

Cost plus

On the general question of the cost of professional communications equipment I recently received a letter from a radio amateur pointing out that high-grade general-coverage h.f. communications receivers from British and European firms tend to cost from about £5,000 to over £10,000 plus v.a.t. Yet some Japanese and American models of comparable complexity and with many of the same basic design concepts are readily available at around £1,000.

Of course, examining the specifications in detail one finds significant differences, particularly in respect of long and short-term frequency stability, in environmental characteristics, especially reference to low-temperature operation, oscillator noise characteristics where frequency synthesizers are used, and reliability targets. Nevertheless, one suspects that for many run-of-the-mill applications the British and European models are being built to a specification overkill in order to meet the demands of the services and government agencies and their specification manias.

Yet both in World War II and again much later in Vietnam, some of the most successful and reliable h.f. radio equipments proved to be those originally designed for the amateur radio market.

At Communications '78, two GCHQ engineers noted: "Technical performance of h.f. receiving terminals over the past few years has been improved in many ways: dynamic range of mixers and amplifiers; selectivity of filters; and frequency setting and stability of oscillators. Resultant operational improvement, measured in terms of bit error or circuit outage rate, is found to be disappointingly small. This apparent enigma is due to the fact that improvements yield a return only when reception conditions are limited to a marginal state. This state is normally a transient condition lasting only a few milliseconds and having an amplitude range of only a few decibels. The operational conditions where a circuit is yielding high error rates are during deep fades and high levels of inter-element and co-channel interference; where these conditions are severe the required data can be lost regardless of the performance of the receiving terminal."

I do not doubt that the European firms are providing excellent designs and relatively good value for money but one wonders whether by concentrating so much on the top end of the professional market they are not rendering themselves extremely vulnerable to overseas competition from lower-grade equipments.

Atlantis and TAT8

Despite all the progress in talking across the oceans via geostationary satellites, there has been no loss of interest in the still-developing use of wideband submerged cables. During 1983, tenders are due to be presented for TAT8, the eighth telephone cable across the North Atlantic. This cable is of particular interest in being the first long-distance ocean cable planned to use fibre-optic technology. It should be capable of carrying up to 36,000 simultaneous telephone conversations. In some recent tests by Bell Laboratories, 108km of submerged optical-fibre cable, using lasers having a wavelength of 1.3 micrometres, it was shown that, with repeaters spaced at 54km along the cable, digital bit rates of up to 274 million pulses per second could be carried. Other international companies are working on undersea fibre-optic cables. For example, the French Cables de Lyon and CIT-Alcatel in conjunction with the French National Centre for Telecommunications Studios. An optical-fibre cable is due in service between France and Corsica in 1985 and optical cables have already been laid in the south of France. British Telecom claims the first submerged optical cable in Scotland.

On October 21, 1982, the eleven-nation "Atlantis" co-axial cable between Brazil and Portugal was officially opened, to become the second wideband cable across the South Atlantic. The 1847 nautical miles section between Dakaar and Recife consists of a 14MHz system supplied by STC, providing 1840 (3kHz) channels, compared with the earlier Bracan cable which carries only 160 speech channels. The north section of Atlantis, between Burgau, Portugal and Dakar was supplied by the French Submarcom (subsidiary of CGE) and is a 25MHz system providing 2580 (4kHz) or 3440 (3kHz) voice channels. The system is designed to have a working life of 25 years.

Still at an early planning stage is a new Europe to Southeast Asia cable via the Middle East. This was agreed by eight countries early in 1982 and bids are due this year.

Over the past couple of decades the reliability of ocean cables has been significantly improved by the increasing use of sea-ploughs in coastal waters. These dig a two foot deep trench on the sea-bottom for the cables and then covers them over to provide protection against the activities of trawlers and other fishing vessels.

USA and WARC

President Ronald Reagan, in a formal letter of transmittal dated November 24, 1981, sought ratification of the radio regulations agreed at WARC 1979. He stated: "I believe the United States should be a party to the Regulations from the outset (1 January, 1982) and it is my hope that the Senate will take early action and give its advice and consent to ratification". Up to December 1982 the Senate has still *not* given its consent, so it would appear that, for a full year, the country having more radio transmitters than any other has not formally been bound by the international radio regulations which have the status of an international treaty!

Satellite shuttle

An important "first" for satellite communications was the successful launching during November of two geo-stationary communications satellites from the space shuttle: SBS3 for Satellite Business Sytems carrying ten transponders and Anik-C for Telesat Canada with 16 transponders intended for Canadian domestic telecommunications and distribution of television programmes to cable networks. SBS3 will provide 56bit/s data services but later 1.5Mb/s. Both were built by Hughes Aircraft and NASA received $16-million to cover the two launches, considerably less than the cost of two conventional rocket launches.

AEG-Telefunken are to supply 20GHz, 20 watt output travelling-wave-tube amplifiers to MIT for communications satellites. Toshiba has revealed the prototype of its domestic 12GHz DBS receiver. It uses gallium arsenide monolithic amplifiers at s.h.f. and u.h.f., surface-acoustic-wave filter, low-cost copper-coated iron helix as waveguide and 1-metre dish aerial, and is claimed to be suitable for digital audio.

AMATEUR RADIO

Telecommunications teeth

Radio amateurs are hoping that Part V of the new Telecommunications Bill, which amends the Wireless Telegraphy Acts 1949 and 1967, if it becomes law in its proposed form, may prove effective against the continued abuse of the London 144MHz repeaters and the increasing intrusion into the 28MHz amateur band of illegal c.b. operation.

Part V will make it much easier for the authorities to bring prosecutions for breaches of the Wireless Telegraphy Acts, including both "piracy" and deliberate interference. It sharply increases the penalties for such offences, makes it easier to seize illegal equipment and also gives powers of arrest.

Where apparatus is of a category subject to a restriction order it would no longer be necessary to prove that it was being used, but extends the offence to cover manufacture (whether or not for sale, and including home construction from components), selling, offering for sale, renting, advertising, "having in one's custody or control" as well as importing. It also appears that the Home Office will have the right to specify equipment according to the use made of it – an important clause for radio amateurs and other licensed users since otherwise it would be difficult to distinguish between equipment intended for legal purposes, such as amateur radio, local broadcasting and that intended for pirate operation.

At first glance the Bill seems to have been carefully drafted to catch offenders without seriously restricting the licensed operators, but of course in practice much will depend on how Part V is administered, how many legal loopholes will emerge and how seriously breaches will be treated by the courts. But as it stands the Bill will certainly give the authorities some very sharp teeth.

Licence changes

Since 1 January 1983 the Home Office has agreed several changes to the UK licences, including dropping the need for applicants to furnish proof of British nationality or age, although the lower age limit for licences will continue to be 14 years. The special series of reciprocal G5-plus-three callsigns issued to overseas amateurs wishing to operate in the UK (type C and D licences) is being discontinued; they will in future be issued with G4-plus-three (A) or G6-plus-three (B) callsigns and will follow this by their own "home" calls.

The Home Office has undertaken to speed up the issue of new licences. By early December it was claimed that the back-log which existed throughout 1982 had been eliminated, although there are still delays in converting Class B licences into Class A.

The 3000 or so British amateurs who make up the Raynet emergency service are in future to be allowed to participate in up to one exercise per month on behalf of any of the recognized user groups, and it is likely that user services will soon be extended.

"Amateur" satellite?

Some engineers and academics still react unfavourably toward being associated closely with "amateur" radio, even when the activities concerned are of fully "professional" standard. For example while everyone concerned has warmly welcomed the reactivation of the Uosat-Oscar 9 satellite, it has not passed unnoticed that the University of Surrey does not seem particularly anxious that its £118,500 spacecraft should be regarded as an Oscar (orbiting satellite carrying amateur radio). In the recent special issue of *The Radio & Electronic Engineer* (August/September 1982) devoted to UOSAT, Professor J. D. E. Beynon, head of the electronics and Electrical department writes of Uosat: "It has been variously dubbed by some of the popular technical press as an "amateur" or "educational" satellite . . . neither adjective correctly describes the spacecraft. The misnomers have arisen because the satellite has been so designed that the data it generates can be easily received by simple and inexpensive groundstation equipment such as might be readily available to individual amateurs or educational establishments as well as to professional engineers and scientists". A curious description of a satellite that indusputable is operating as part of the amateur satellite service and part of the Amsat-Oscar programme!

In brief

Permission for British amateurs to operate between 2300MHz and 2310MHz has been withdrawn . . . The number of "out of tv hours" permits to operate between 50 to 52MHz for propagation study is being restricted to 40, although about 300 British amateurs have shown interest . . . Two new 10GHz beacons have become operational: GB3GBY is on 10.4GHz near Grimsby with 10mW to a slotted waveguide aerial beaming south. GB3CEM at Sutton Coldfield is on 10.369GHz with 3mW and an omnidirectional aerial . . . Amateur licences in the G3R and G6S series were being issued in December . . . A new 70.13MHz beacon with the call E14RF is operating near Dublin with a power of five watts . . . The RSGB 1983 VHF Convention is on Saturday, March 26 at Sandown Park . . . Of the record 8169 candidates who completed the May 1982 Radio Amateurs Examination, 5469 (67%) qualified. Failure rate was 25% on Parts 1 & 2, with 13 to 14% reaching distinction level in each part . . . Four of the Russian RS series of satellites carrying 145 to 29MHz transponders are currently operational. **Pat Hawker, G3VA**

Data error detection and correction

Whatever the equipment under design, the choice of error detection – and perhaps correction – technique is largely defined by the characteristics of the channel. Written as part of the disc drive series, this article explains in a non-mathematical way how adding redundant data gives error protection.

by J. R. Watkinson, M.Sc.

Protection against data errors in disc drives is achieved by adding redundant information to the data proper. The theory of error detection and correction is well documented for the mathematical fraternity mathematics has been taken out of the following explanations.

Whatever the piece of equipment under design, the choice of error detection and perhaps correction technique is largely defined by a study of the error characteristics of the channel[1]. Errors in disc storage most commonly occur in bursts: several bits close together may be corrupted leaving the remainder intact. With serieal recording, a pinhole or scratch in the oxide coating of the disc or an interference pulse could cause this kind of error. With the proper use of media integrity techniques and for reasons which will become clear later, error correction is not needed very often. This suggests the simplest adequate implementation will be the most cost-effective, with speed of correction being of secondary importance.

Cyclic codes

Disk drives rely heavily on cyclic error detection and correction codes because they offer good burst error performance and can be realised with simple and inexpensive circuitry. Cyclic codes are so called because they have a structure which causes them to repeat after a fixed period.

The principle of cyclic error detection is simply that of division. The code word* formed when a check word* is added to data is designed to be an integral multiple of some dividing factor. On reading, the information is divided by that factor to give a remainder of zero unless there has been an error. The code word is formed by dividing the data by the chosen factor and adding the inverted remainder.

A trivial decimal example is shown in Fig. 6(a), where the check can be fooled if two symbols are in error by an equal and opposite amount. This can be overcome by choosing two digits, one calculated from even digits and the other calculated from odd digits. The number of digits in error cannot exceed the number of check digits if they are to be detected, Fig. 6(b). A little thought can suggest error conditions which would fool example 6(b) also. To detect a given number of error digits there must be a division process for each expected error. A binary polynomial* achieves this, using a shift register with feedback.

Before explaining the workings we need to understand the properties of such a circuit with no input. Fig. 8 shows the effect of shifting a non-zero pattern in the circuit of Fig. 7; the pattern repeats every seven shifts. As the register has only three stages, there cannot be more than 2^3 states but as one of these states is zero, unusable because it remains zero after a shift, the maximum number of states is seven. In general, the code length n is $2^m - 1$ where m is the number of stages. The most important characteristics of these circuits are that a bit pattern entered appears again in exactly n shifts, and that the states are highly non-sequential. The sequence of bit patterns the register goes through is known as a Galois field.

Returning to Fig. 7 the circuit generates a remainder by dividing the data stream by a polynomial. The remainder becomes the check word, and the data plus the check word becomes a code word. The length of this code word cannot exceed the period n of the m stage shift register given by 2^m-1, otherwise there is an overflow and the whole of the data will not be protected. The number of data bits k is n minus the number of check bits, n-m, thus described as an (n,k) code *. In the three-stage shift register the corresponding code is given by $(2^3-1, 2^3-1-3) = (7,4)$.

With a logical true signal at the control input to the and-gate, the feedback mechanism is enabled, and if four data bits are serially presented to the input and individually clocked the three check bits will be in the three stages of the register. If the feedback and-gate is now disabled with a false control input, the circuit acts as a normal shift register and the three check bits can be shifted out. In the decimal example the inverse of the reminder was taken, but in the unsigned binary case there is no concept of a negative number, and the remainder is unmodified. A further characteristic of the simple xor circuitry is that there is no borrow or carry. The decimal example given is not therefore an exact parallel.

A stage-by-stage example of the operation of the circuit and the resultant code is shown in Fig. 7(top). During an error-free read, the action of the circuit during the first four bits is identical, and the register contains the same check word as written. When the fifth bit, i.e. the first check bit, is clocked in it is ex-ored with right-most register bit, which would have been the first check bit during encoding. The resulting output from the right-hand ex-or-gate is false for a good compare, and the shift enters a zero in the left-most stage of the register, presenting the second check

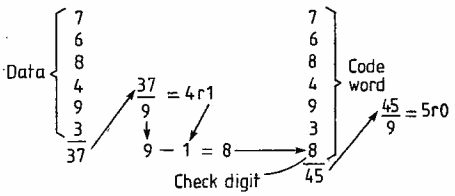

Fig. 6(a). Code word formed by adding a check digit so that the sum of the code word is an integral multiple of some number, in this case 9. Two errors, however, go undetected.

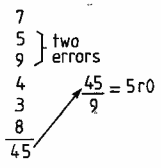

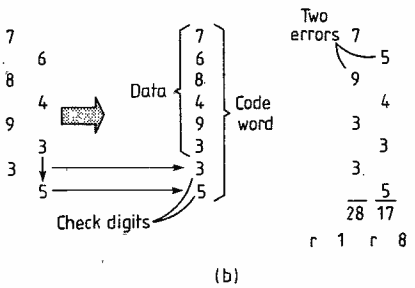

(b)

Fig. 6(b). Simultaneous division of odd and even digits allows two adjacent errors and many, but not all, other pairs of errors to be detected. The penalty is more check bits.

*Defined in the glossary.

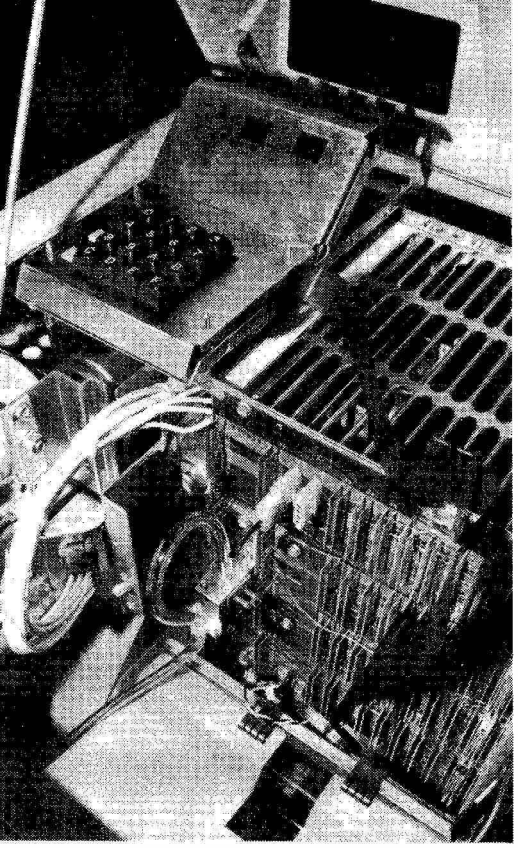

Engineer's console of microprocessor-based disc-drive showing keypad and display becomes accessible only with the cover raised.

bit to the right-most stage for comparison with the sixth received bit. In this way the received check word is compared with the check word calculated from the data, and if the received word is a code word, the register must go to zero. Fig. 7 shows a stage-by-stage error-free read.

A more general case which displays the bit dependencies of the register-stages as the encoding proceeds is bottom in Fig. 7 which also shows the check matrix which the register actually implements. Crosses in the matrix rows correspond to the data word bit positions which go to make up each check bit.

The matrix structure reveals how the correction mechansim works. One error in any of the first four bit positions changes the three-row parity checks in a unique manner. For example, if bit 2 is wrong, the centre and top rows have a parity error, but the lower row has not. The pattern of failed parity checks is usually called the syndrome* of the error, and if the error-correcting circuitry has a stored copy of the matrix it can locate the error by processing the syndrome. The correcting pattern needed to identify the failed bit from the syndrome is illustrated by Fig. 7(bottom).

Readers familiar with the parallel error correction processes used in computer memories may recognise the form of the check matrix – none other than a Hamming code in serial clothing. The parallel encode in memory circuits is carefully designed so that the syndrome is the bit address of the error, which gives a high speed correction. Typically only one bit can be corrected but that covers the observed failure mechanism. As we are not interested in absolute speed, this technique is not used in disc drives and the observed error mechansim is different.

The key to serial error correction is the Galois field determined by the design of the shift register. If a shift of the register is taken to be analagous to incrementing a r.o.m. address, the state of the register for each shift is analagous to the r.o.m. output: this is the error position look-up mechanism.

The simple example described can only correct one bit; if it is expanded to correct more bits, the number of check bits can exceed the number of data bits. This great redundancy is necessary because the matrix checking caters for errors anywhere in the data. The number of check bits can be reduced if it is known that the errors occur in bursts.

Burst error correction

A data block has been deliberately made small for the purpose of illustration in Fig. 9(a). The matrix for generating parity on the data is shown beneath. In each horizontal row of the matrix, the presence of an X means that the data bit in that column is counted in a parity check. The five rows result in five parity bits which are added to the data. The simple circuit needed to generate this check word is also shown. The same data word corrupted by three errors is shown at Fig. 9(b). The

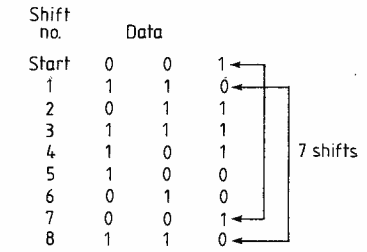

***Fig. 8.** Behaviour of the circuit in Fig. 7 with no input. Data repeats every seven shifts and the states are nonsequential numbers. These repeating states form a Galois field.*

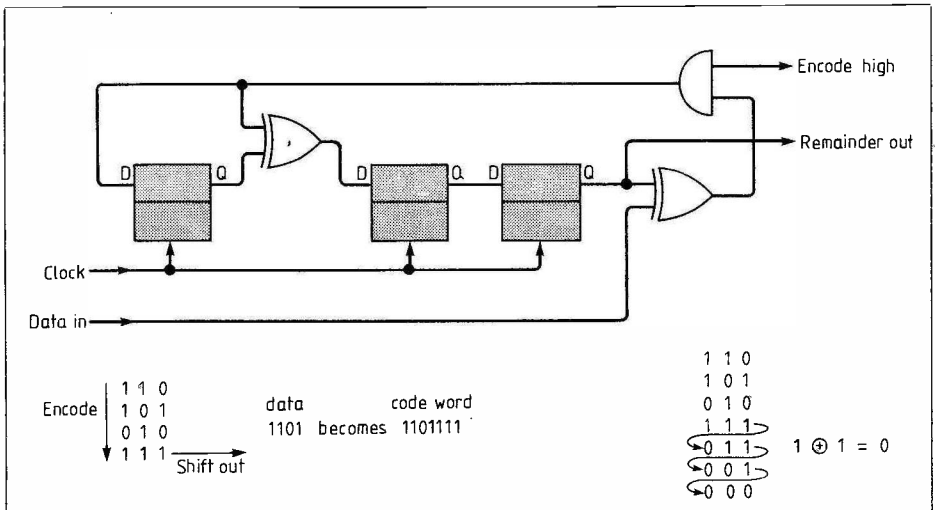

***Fig. 7.** Three-stage shift register circuit divides serial input by a binary polynomial. Example of encoding sequence for data shown uses the circuit. Columns correspond exactly to the latches. First data bit to enter the circuit is the left-hand one. The read checking process for encoding example shows that for every match between actual and calculated check bits, a zero is entered into the left stage of the register, eventually resulting in an all zeros syndrome. This can be repeated with any bit in error and will result in a non-zero syndrome in each case. Steps by which the shift register simultaneously builds up the three check bits. Unlike conventional accumulators, code bits build up by moving from one latch to the next. For example, left-most latch starts in the top row being a function of bit zero only, but when bit one is included in the second row, the sum of bits zero and one has shifted into the centre latch. As next data bit is shifted in, contents of the centre latch move to right-most latch, unchanged. As data bit three is shifted in, it forms the lower input to the right-most gate, and the right-most latch forms the upper input. Thus feedback to left-most latch is the sum of bits 0, 1 & 3. This bit is the last one to be shifted out so it becomes bit 6 of the code word.*

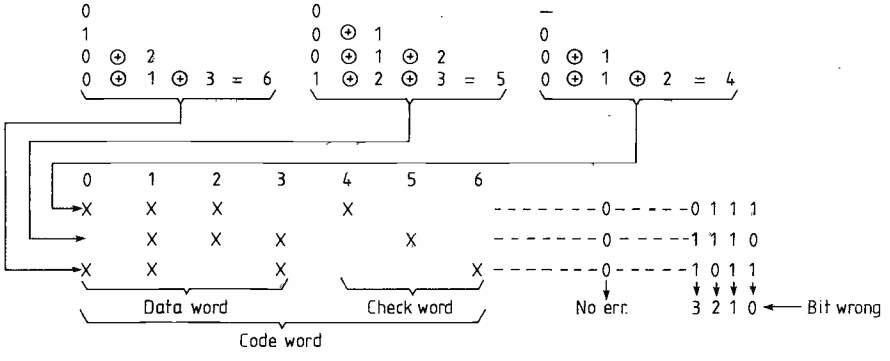

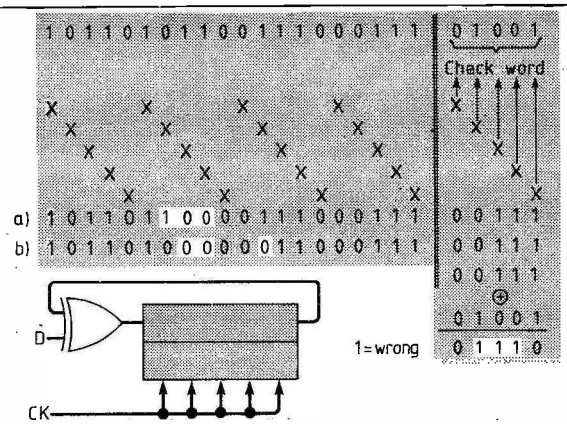

Fig. 9. This matrix developes a burst detecting code with circuit shown. On reading, the same encoding process is used, and the two check words are ex-or gated. Two examples of error bursts shown (a), (b) give the same syndrome, which ambiguity is resolved by the the technique of Fig. 10.

matrix check now results in a different check code. An exclusive-or between the original and the new check words gives an error syndrome pattern. Fig. 9(c) is a different error burst that gives the same syndrome, an ambiguity that must be resolved.

One method of doing this follows. The definition of a burst of length b bits is that the first and last bits must be wrong, and intervening b−2 bits may or may not be wrong. As the presence of a one in a syndrome shows an error, a burst syndrome of length b cannot contain more than b−2 zeros. If the number of check bits used to correct a burst of length b is increased to 2b − 1, then a burst of length b can be unambiguously defined by shifting the syndrome and looking for b − 1 successive zeros. These must lie outside the burst because the burst cannot contain more than b − 2 zeros. Fig. 10 gives an example of the process and shows that the number of shifts required to align the b − 1 zeros at the left-hand side of the register is equal to the number of bits from the last previous (2b − 1)th bit boundary. The b right-hand bits will be the burst pattern. Obviously if the burst exceeds b in length, the error will be uncorrectable. Using this approach only, we can define the burst but cannot say where in the block it is. To locate the burst we need to use a code of the kind described earlier.

A burst-correction cyclic code can be formed by multiplying together the expression for the burst definition and an error location polynomial. The check word now consists of m + 2b − 1 bits, and the code length n becomes $(2^m - 1) \times (2b - 1)$ bits. This is the principle of the Fire codes, first documented in 1959 by P. Fire. Fig. 11 shows the synthesis of a Fire encoder from the two parts of the polynomial, with the mathematical expressions included for interest.

During writing, k serial data bits are shifted in to the circuit, and n − k check bits are shifted out to give a code word of length n. On reading, the code word is shifted into the same circuit and should result in an all-zeros syndrome if there has been no error, as in Fig. 7(c). If there is a non-zero syndrome, there has been an error.

As all data blocks are recorded as code words, the effect on the encoding circuit is to bring it to zero on reading. It is as if the data were never there. Any non-zero syndrome must represent the exclusive or function of what the data should have been and what it actually was. This function has however been shifted since the error burst an unknown number of times. The syndrome is one state of a Galois field and the error burst another. Any state of a Galois field can be eventually reached by shifting, so if the syndrome is shifted sooner or later the error burst will show up. But how will it be recognised?

The only logical ones in the correct state will be those due to the error burst, and they will be confined to a maximum of b contiguous stages of the register. All other stages must go to zero when the burst shows up. Owing to the highly non-sequential nature of Galois fields, there is no possibility of the right number of contiguous zeros being present in any other state. The number of shifts required to arrive at this state is counted, as it is equal to the position of the burst in the block, Fig. 12.

More recent codes are the B C H (Bose-Chaudhuri-Hocquenghem) codes, which offer the same performance as the Fire codes but require fewer check bits, and the Reed-Solomon codes, which permit correction of multiple bursts.

Whatever the choice of code, the number of check bits is chosen to satisfy the required error detection and correction requirements of the system in terms of the burst size which can be corrected and the probability of undetected error. In practice this results in code words many times longer than the data blocks used. The actual data written and the check word thus represent the end of a long code word which begins with many zeros. As the effect of shifting zeros into a cleared encoder is to leave it unchanged, it is not necessary to cater for the unused part of the code word during writing. By a similar argument, the read process takes place as if the whole code word had been present. If however, a non-zero syndrome results from a read, then it is necessary to subtract the number of leading zeros from the number of shifts required to perform the correction, as the states of the Galois field are a function of the polynomial only, and are unaffected by our truncation of the data.

In practice, the simplest way to realise such a subtraction is to use two shift counters, one of which counts up to the number of leading zeros and enables the second which counts relative to the beginning of the actual data. This makes it easy to cater for more than one disc format with the same error correction circuitry, as only the leading zero-count needs to be changed if the number of bits in a block is changed. This pre-count avoids the need for subtraction circuits, but has the disadvantage that the shifting of leading zeros requires a substantial proportion of a disc revolution to perform a correction, but this is of little consequence.

In the block diagram of such a system, Fig. 13, the output consists of two parameters, firstly the error burst pattern, which will be a 1 for every bit in error, and secondly the location of the start of the burst expressed as the number of bits from the beginning of the block. Owing to the serial nature of the correction process, this information becomes available some time after the data to be corrected was read, which implies the use of a buffer to hold the data prior to correction. An intelligent

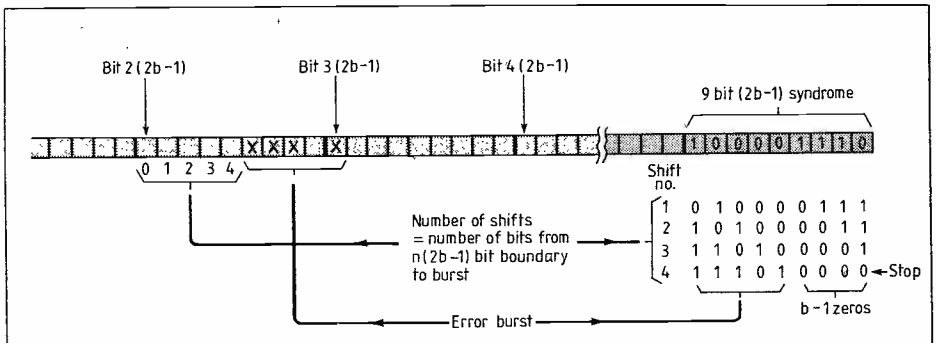

Fig. 10. Burst of length b bits can only contain b − 2 zeros, so b − 1 zeros cannot be in a burst. By shifting the syndrome until b − 1 zeros are detected, the burst is defined unambiguously. The number of shifts needed gives the position of the burst relative to the previous n (2b − 1)th bit boundary. In this example b=5, hence 2b−1=9 and the boundaries referred to will be at bits 9, 18, 27 etc. A burst of up to 9 bits can be detected but not corrected. Only the nature of the burst is defined by this process, its position has to be determined independently.

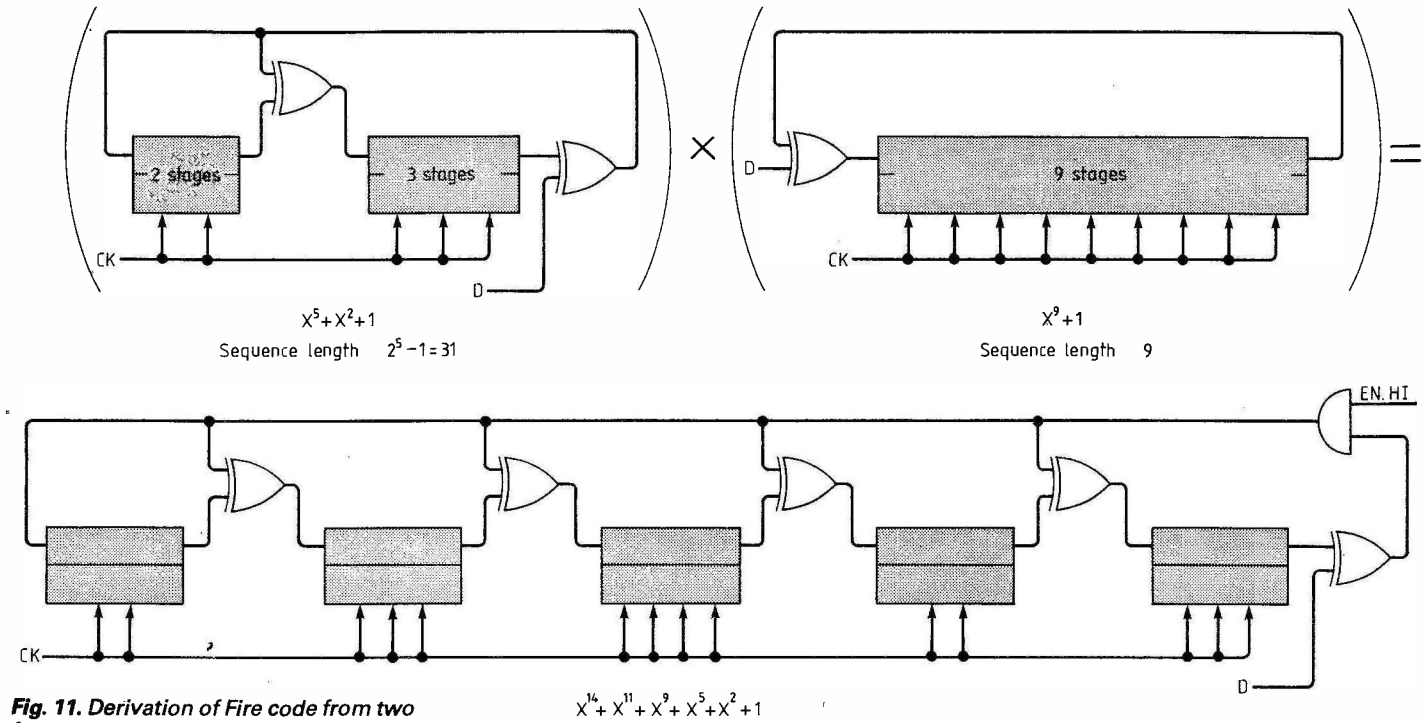

***Fig. 11.** Derivation of Fire code from two fundamental expressions, together with encoding circuits. From the code word length of 279 bits, 14 are check bits, making this a (279, 265) code.*

disc controller may contain such a buffer, but in other systems the main memory can be used. In this case the operating system has to complete the error correction process using the two parameters which the drive makes available in its control registers. The software has to use the disc address and the error position register to establish the position of the burst relative to the whole data transfer, and then add this to the memory starting address for the transfer to arrive at the physical memory address of the bits in error. The burst may lie across a memory word boundary, or it may be partly or wholly in the check word. The software must be able to deal with all of these eventualities.

There are two interesting variations on this mechanism. Owing to the nature of Galois fields, it is possible to construct a circuit which generates a given field in the reverse order. A syndrome placed in such a circuit would resolve the burst without the necessity for leading zeros, in a correspondingly shorter time. Taking this a stage further, some systems pass the syndrome to the executive to be resolved by software in the reverse direction. This has the advantage that the burst size b which is deemed correctable can be made smaller under system control. This permits a block with a small burst to be used for storage, but causes the system to be flagged when the burst size increases beyond the arbitrary limit. The data can still be recovered by restoring the software limit to the maximum allowed by the polynomial.

Error handling algorithms

The number of error corrections performed is less than the number of read errors detected. This may seem paradoxical until the mechanisms which cause errors are examined. As stated, the system goes to great lengths to avoid writing data on suspect areas of the disc. Revectoring, defect skipping and bad block files all make the probability of a read error due to the medium less than the probability of errors due to noise.

If a read results in a non-zero syndrome, it is pure conjecture to suggest whether the error was due to any one mechanism. According to earlier definitions, an error due to the medium is a hard error, whereas errors due to electrical noise or dust particles momentarily disturbing the flying height are soft errors, and the only way to tell them apart is to repeat the conditions and see if the error is still present. The logical way to handle a read error is thus to undertake a number of re-reads. If one of these gives an error-free read, then the original error was a soft error and was due to noise or dust or degradation of the hardware. If re-reads do not give an error-free transfer, then the error is hard and must be due to the medium. In this case the error correction logic is enabled and a correction performed. Whether the error is correctable or not, the address of the disk

***Fig. 12.** Owing to the characteristics of Galois fields, syndrome Y is simply the error burst which has been shifted a number of times equal to the number of bits from the burst to the end of the code word. As the field repeats every n shifts, it is only necessary to shift the syndrome and count the number of shifts necessary to give a zero detect condition. This number is equal to the position of the burst in the data. If no zero condition is found, then the burst is longer than b and cannot be corrected. It is however, important to detect uncorrectable errors. The example can detect all bursts up to the length of the check word n − k; beyond this a statistical element is introduced.*

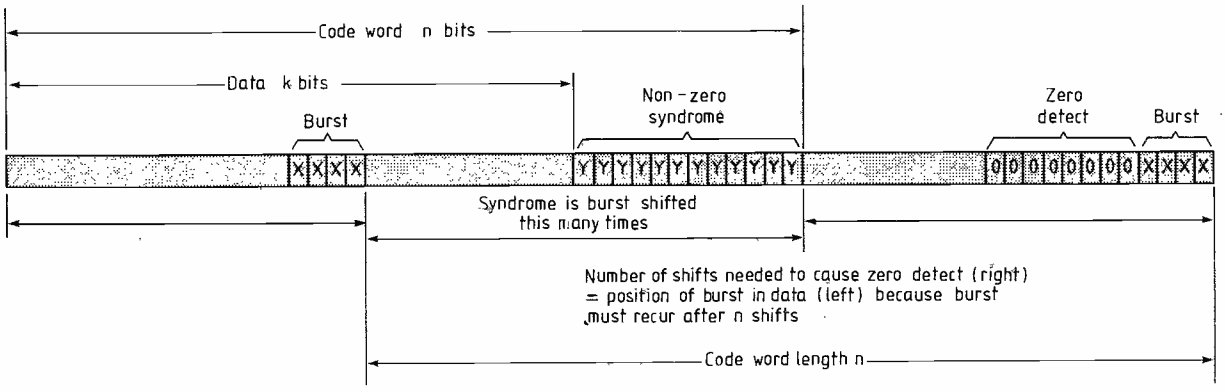

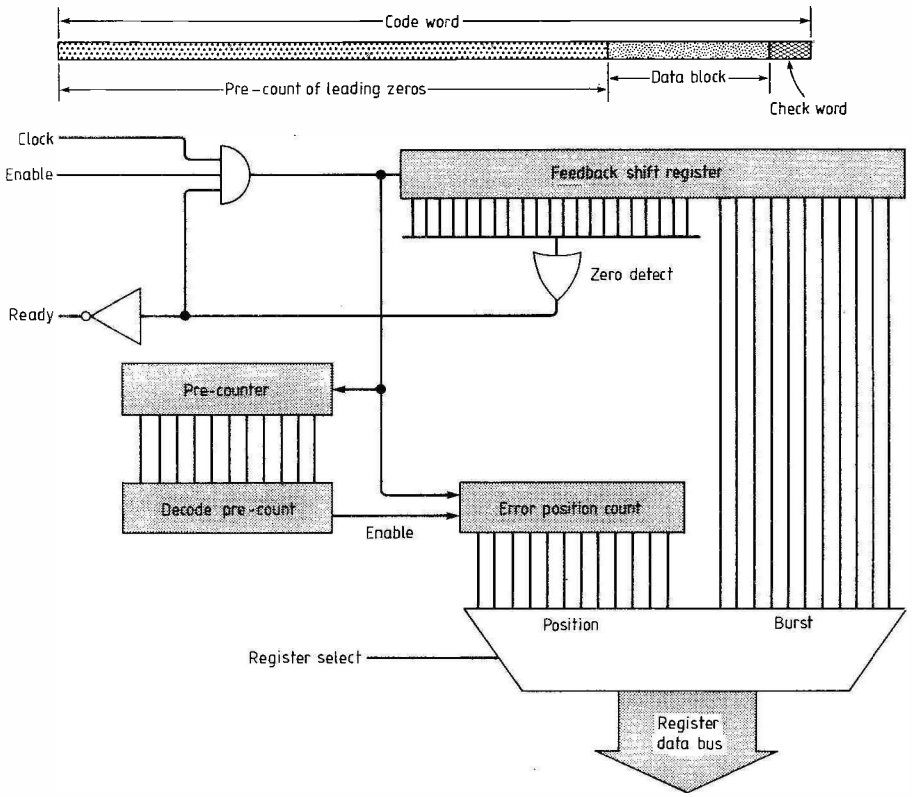

Fig. 13. Error correction hardware where disc block is smaller than the code word length. When a non-zero syndrome is detected after a read, the leading zeros in the code word which precede the data are counted by the pre-counter. When the pre-count satisfies the decoder, error position counter is enabled, which gives error position relative to the start of data when zero condition is detected. This disables the shifting and raises the ready bit.

block concerned can be stored, and when it is no longer in use, it can be added to the bad block file to ensure that it is never used again. Obviously if error correction were to be employed in the first instance of an error, the system would be denied the opportunity to properly analyse the failure and make a permanent recovery.

The use of servo surface disc drives complicates the error recovery algorithm, as these offer the ability to offset the positioner to recover data from foreign discs whose tracks are not registering properly with the heads.

Offset would normally be employed after re-tries with error correction enabled have failed, on the grounds that the use of a mis-registered pack is highly unlikely. Most of the time, disc drives read data they themselves have written.

It is important that an error in reading, not just in stored data, should be detected as a data transfer is always preceded by comparison of the header contents with the desired disc address. As correction is not necessary, it is adequate to end each header with a cyclic redundancy check character. During the comparison, the header and c.r.c.c. are shifted into the check circuit, and only if a zero-syndrome results will the header compare be validated.

In the case where a header suffers from a hard c.r.c. error, it may still be possible to recover the associated data. Some drives support a read-without-header-check function. The procedure is as follows. The system issues a search command with a sector address specifying the sector before the one with the bad header. When this header is found, the drive interrupts, and if the system immediately issues a read-without-header-check function, the desired data will be read without an abort caused by the bad header. The system discontinues the use of such a block when it is no longer needed.

Glossary of error correction terms

Channel
Mechanism which conveys data and redundancy from encoding to decoding. This includes writing and reading heads and medium. Only errors which take place in the channel are of interest.

Check word
Redundant information which is appended to the data proper to make the whole a code word.

Code length
Number of different states which the Galois field associated with the encoding polynomial can have determines the maximum length of the code. Usually given the symbol n.

Code word
Code word gives a zero remainder when divided by polynomial.

Galois field
Set of all states of feedback shift register circuit. The precise mathematical definition of a Galois field is inappropriate at this level of presentation.

Maximum length sequence
Galois field which is as large as is permitted by the number of stages in the register m. Equal to 2^m-1.

(n,k) code
Code of length n bits which conveys k data bits. Number of check bits is thus n−k.

Polynomial
Mathematical expression which when applied to a number causes that number to be raised to various powers, all of which are then summed. In error correction, the division by a polynomial is used because it permits simultaneous calculation.

Syndrome
When n bits which are not a code word are shifted into the associated polynomial division circuit the result, called a syndrome, will be non-zero. The syndrome is the error shifted an unknown number of times.

Instalments in the disc drive series
Disc drives March 1982
Read/write head assemblies April
Head positioning techniques May
Mechanical aspects July
Servo systems August
Winchester drives September
Floppy-disc drives October
Controllers—1 November
Controllers—2 December
Data integrity January
Data error detection February

LITERATURE RECEIVED

Advance information booklet is available for the high-speed versions of Motorola MC68000 16-bit microprocessors. Five processors have operational clocks from 4MHz up to 12.5MHz. They have 32-bit internal registers, 16Mbyte direct addressing range, 56 instruction codes, memory-mapped input and output and 14 address modes. The MC68008 uses the same internal architecture but operates an 8-bit data bus enabling a simplified system to be designed with superior performance to any 8-bit processor and 1Mbyte linear address space. The MC68010 virtual memory processor allows error detection and correction and so would not necessarily abort a bus cycle on receipt of an error signal. Redwood, the MC68020 processor, is a true 32-bit processor which has been designed to accommodate M68000 co-processors through a special interface. Numerous processors may be coupled together, each of which may be tailored to a specific data type, task, instruction set, etc. The internal instruction cache on the 68020 retains recently used instructions so that if re-used there is no need to access the external bus. Motorola Ltd, 88 Tanners Drive, Blakelands, Milton Keynes MK14 5BP. **WW400**

Microcomputer interfacing for 12bit data acquisition

Interface circuitry designed for compatibility with computers using the 6502 microprocessor and expansion/bus connector provides eight analogue inputs, four analogue outputs and 20 digital i/o lines.

by M. R. Driels

The subject of interfacing microcomputers to the real world has received considerable attention in recent years and with some justification. Although there have been several excellent articles dealing with computer interfaces designed around an eight bit word length, there are times particularly in scientific work where more accuracy is required in the measurement and establishment of analogue signals. This article is intended to provide such a design using eight channels of analogue to digital and four channels digital to analogue conversion working to an accuracy of twelve bits, or 1 part in 4095. The complete circuit is a data acquisition system in the true sense of the word since it allows the acquisition of analogue data, the ability of the computer to analyse the data and subsequent modification of the status of external hardware so as to achieve some desired objective.

The interface has been designed to be compatible to microcomputers using the 6502 microprocessor and having some form of expansion/bus connector. Such microcomputers include Apple, CBM, Acorn, UK101, Superboard and the BBC micro. Each of these machines will provide the necessary signals required by the data acquisition system namely the complete address bus, data bus, and half of the control bus signals (02, $\overline{\text{RESET}}$, $\overline{\text{IRQ}}$, $\overline{\text{NMI}}$). Of course the hardware implementation of the expansion is different for each machine and the mechanical linkage of the interface and computer is best left to the user.

In choosing suitable components, particularly for a-to-d conversion, a trade-off between performance and price is always necessary; the ICL7109 being a relatively slow device but at around £12 it is inexpensive. Digital-to-analogue conversion is dealt with using National Semiconductor 1230 series which are three, pin-compatable converters costing from £5 to £9 per channel depending on the conversion linearity required (0.05% to 0.012%). Considerable use is made of the 6500 series versatile interface adapter – the 6522. In the circuit board design a totally uncommitted 6522 is included so that the user may control digital devices (relays, motors, indicators), monitor the state of digital devices (switches, proximity sensors) or interface custom built circuitry to the same board. As this v.i.a. plays an important part in the overall design, it is appropriate to discuss it in more detail.

Versatile interface adaptor – 6522

A 40-pin integrated circuit specifically manufactured as an interface for the 6502

Fig. 2. *Address bus decoding: the highest twelve bits are connected to the 3-8 decoders shown while the lowest four go directly to the 6522s.* ▶

Fig. 1. *6522 versatile interface adaptor showing computer bus connections on the left and the buffered outputs on the right.* ▼

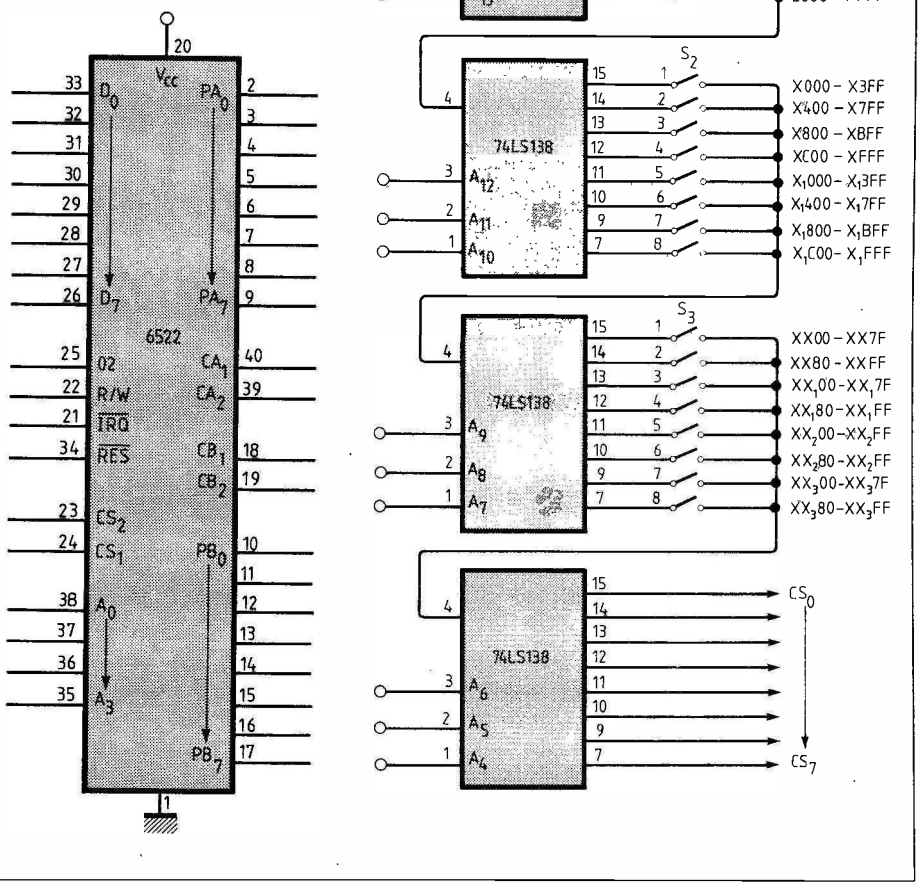

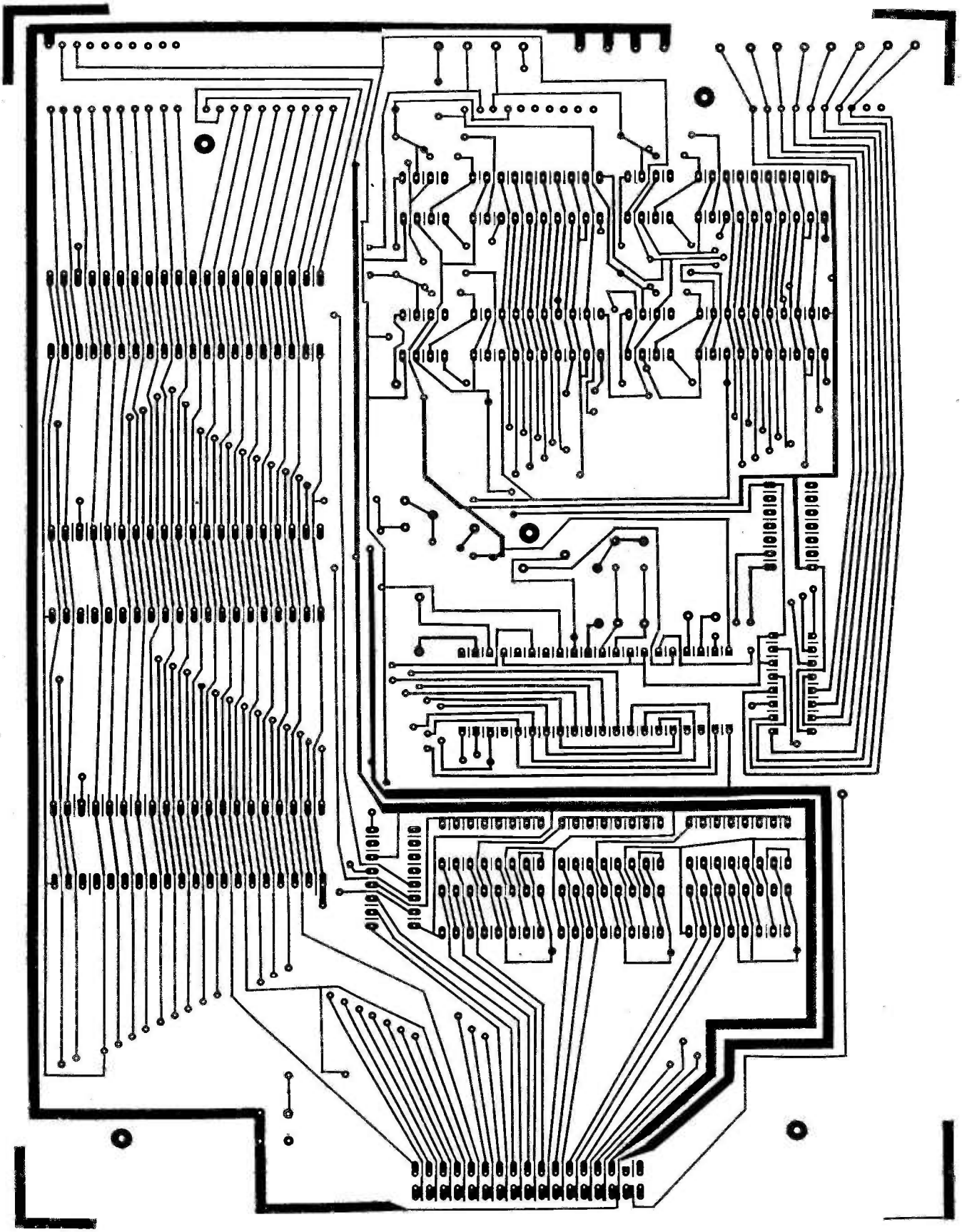

microprocessor is at the heart of the design of the i/o board. The pin configuration is shown in Fig. 1 where the lines on the left of the diagram represent information from the host computer while those on the right are the output lines. Essentially the device provides two eight-bit ports each having two control lines, together with a range of sophisticated i/o facilities including parallel-serial data conversion, pulse counting, 16-bit timers and many others. But it is the operation of the two ports and their associated control lines that this article is chiefly concerned with.

Because the device is used in a memory-mapped configuration, the host computer recognises the 6522 simply as 16 consecutive memory locations, or registers. It is what is written to, or read from, these locations that determines the mode of operation of the 6522. In explaining the design and operation of the i/o board it is necessary only to refer to six of these registers, although a more complete account of

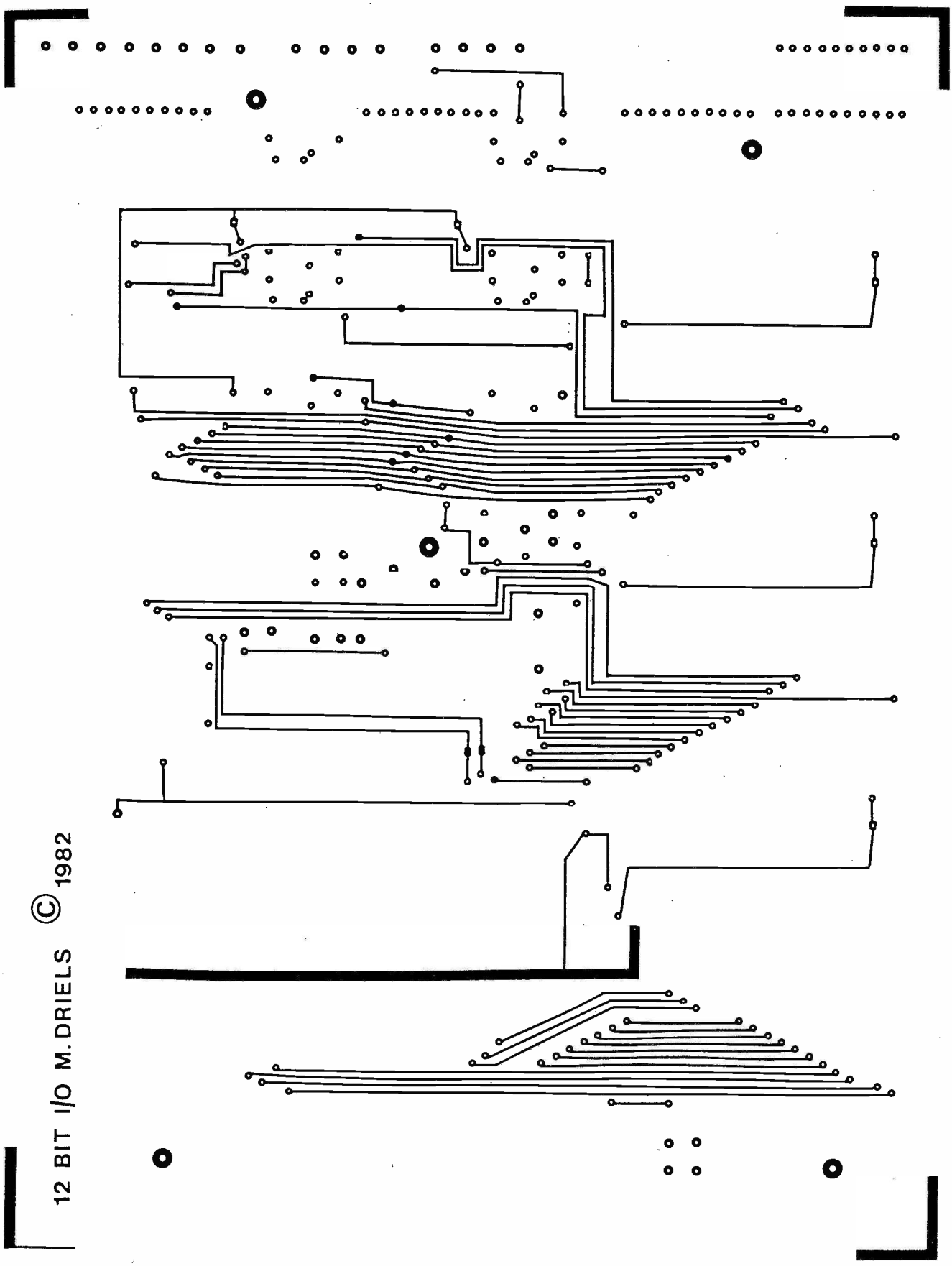

the full programming facilities available may be found in reference 1. The two eight-bit ports appear as two of the registers – port A and port B (PA & PB) while two more – the data direction registers (DDRA & DDRB) determine whether the ports are input or output. Each bit of the DDR corresponds to a bit in the corresponding port so that if 00000000 is written to DDRA then each line of PA is defined as an input, allowing data to pass *into* the computer. Writing 11111111 to DDRB defines PB as an output port allowing data to be transferred *from* the computer. The two remaining registers are the peripheral control register PCR and the interrupt flag register IFR which govern the use of the four control lines CA1, CA2, CB1 & CB2.

Circuit description

Figure 2 shows the first stage of the circuit indicates how the 6522s are used on the board are mapped into the computers

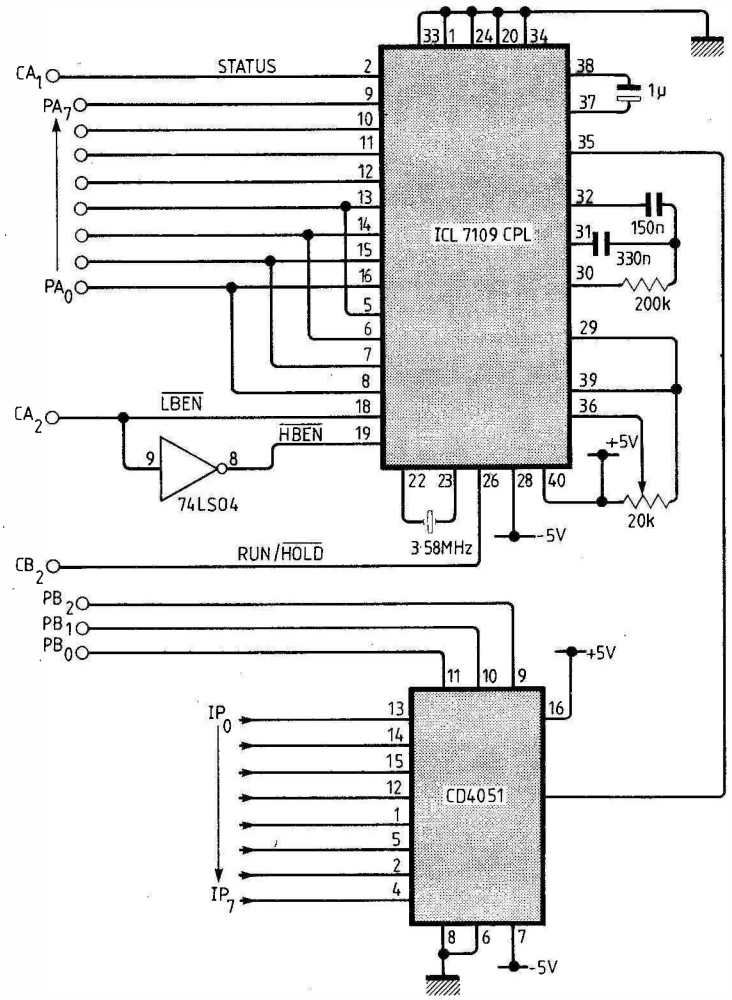

Fig. 3. *Twelve-bit a-d converter using an eight-bit overlayed output bus is preceded by an eight-channel multiplexer.*

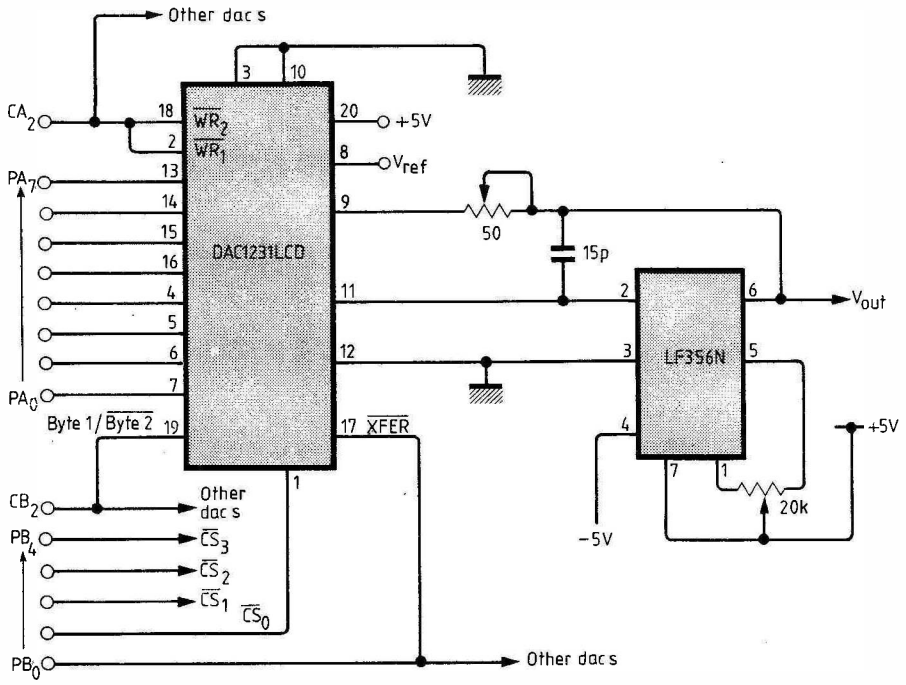

Fig. 4. *Digital to analogue converter produces an output current proportional to the digital input code. An operational amplifier converts this current to a voltage.*

memory, Fig. 2. The address lines are decoded by 74LS138 devices followed by selector switches allowing the 6522s to appear anywhere in the memory map from location 0 to 65536. This facility is important as a fixed range of memory locations may not be suitable for all computers and reference to the relevant technical manual will indicate suitably free areas. Each decoder is enabled by the previous one except for the first which is permanently enabled. The last decoder supplies a total of eight chip-select ($\overline{CS}$) signals although only three are used in this design; one for a-d conversion, one for d-a conversion and the last one handles the digital i/o.

Analogue-digital conversion

The circuit for the eight channel a-d input is shown in Fig. 3, and consists of a single twelve-bit convertor preceeded by an eight-channel cmos multiplexer. A 6522 v.i.a. is configured so that port A is an input port allowing converted data to be read into the microcomputer while port B is defined as an output and governs which input channel is connected to the converter. The a-d converter is operated in a hand-shaking mode using the 6522 s control lines CA1, CA2 and CB2. The RUN/$\overline{HOLD}$ can be used to initiate conversion by making CB2 go high, with subsequent inspection of the data. Signal RUN/$\overline{HOLD}$ is then made low while data transfer is made.

The problem of transferring twelve-bit data on to an eight-bit data bus is solved by the converter by outputting two consecutive bytes. This transfer is governed by the two control lines $\overline{LBEN}$ (low byte enable) and $\overline{HBEN}$ (high byte enable). With both $\overline{LBEN}$ low and $\overline{HBEN}$ high, the least significant eight bits of data are placed on the bus, while $\overline{LBEN}$ high and $\overline{HBEN}$ low, the highest four bits together with polarity and over-range data appear. Figure 3 shows that a single control line CA2 can be used to toggle both of these enables. Using the oscillator shown in he circuit diagram the device will operate at about 7½ conversions per second, although the manufacturers claim a maximum of 30, presumably with a different crystal. If all eight channels are used the system described will update each channel about once every second. If only one input channel is used, however, then port B will select that channel and remain unchanged thereafter, resulting in an improved operating mode of eight samples per second for that single channel.

The 20kΩ precision potentiometer sets the differential reference voltage between pins 36 and 39 of the converter. Full scale output is achieved when the analogue input is equal to twice this reference voltage. The circuit uses the on-board reference (pin 29) and if the differential reference is set to 2.048 volts, a calibration of 1 bit ≡ 1 millivolt will result. For more information on the detailed operation of the converter, consult reference 2.

continued on page 81

Advanced architecture arrays

Design criteria for semicustom digital arrays are becoming closer to the architectural aspects of a microprocessor than circuit concepts of a memory chip. By analysing needs, techniques and trends, Robert Lipp forecasts a route to the array of 1992.

by Robert Lipp

Arrays are subsystem components: design is becoming dominated by logic and system rather than circuit requirements. The overall design criteria are becoming closer to the architectural aspects of a microprocessor chip than the circuit concepts of a memory chip.

The architecture is application dependent and reflects the various ways the arrays can be designed. These design differences can have a major impact on an array's applicability and/or ease of use in a particular application. Just as significantly, they can have a major impact in design and production (producibility) by the manufacturer.

The concept of gate arrays is at least 15 years old. In terms of relative development, they are at the equivalent level of the early four-bit microprocessors. A number of factors have come about in the last few years to thrust development forward, and future developments promise to be as exciting as microprocessor evolution was (and still is).

To understand future trends, a historical perspective is necessary. The earliest arrays in the late sixties and early seventies provided only two benefits: small size and increased performance. They were an expensive alternative to the powerful transistor – transistor, emitter coupled and c-mos logic families.

For quite some time, the t.t.l. and cmos standard product lines pushed their respective technologies in the m.s.i. level. There was very little room for major integration improvements by l.s.i. until the technology progressed much further. Only a few small and medium-scale components were replaced by the earlier arrays: it just did not make economic sense to use gate arrays. In the late seventies, this situation reversed fairly rapidly. Levels of integration soared making it possible to replace scores of standard i.cs with a single array.

In the meantime the cost of development of both systems and i.cs continued to escalate with no end in sight. It became acceptable to "waste" silicon area – formerly called the most expensive real estate in the world – as the production cost of a function on silicon continued to approximately halve every year. Meanwhile labour and capital equipment costs keep threatening to make i.c. development one of the most expensive processes in the world. This shift in sacrificing silicon for reduced development cost and time is what spurred the recent development of gate arrays. We see no end in sight to this trend. Of course the other advantages of gate arrays were always available and also played a significant role in array development. These included power savings, some proprietory protection, reduced size, higher reliability and so forth.

Historical development of gate arrays

Establishment of concept. During this period the products had few gates and little capability. Customers were happy to have anything at all for their specialized needs. Metal-gate cmos, t.t.l. and i.i.l. circuits dominated the field.

Silicon conservation and performance improvement. Minimizing production costs dominated through compact, limited flexibility, hand packed arrays. Arrays were up to hundreds of gates and begining to be accepted on economic grounds. The drive for performance also increased to serve a greater part of the market. Silicon-gate cmos, advanced e.c.l. and other bipolar technologies become widespread. Performance improvement also meant larger arrays and specialized circuitry. We are at the later part of this era and in the early part of the next.

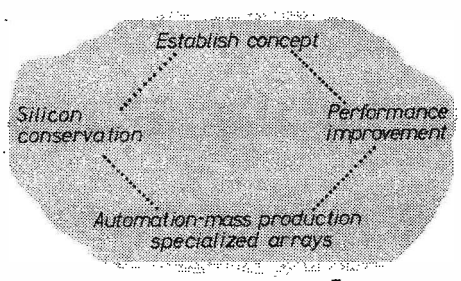

Historical development of gate arrays

Design automation and mass production era, emergence of specialized arrays. Automation is occuring through advanced software and hardware tools, and multilevel interconnect arrays optimized for automation. The price paid for the automation is the waste of silicon, but the benefits are quick turnround and a saving of labour.

Mass production implies the need for production control and enhanced testability and also production maintenance of hundreds or even thousands of individual customized part types. Future array products will have specialized on-chip devices to aid in production transfer and maintenance.

The other aspect of mass production implies mass production of design. This implies very strong automation of design. The term computer automated engineering (c.a.e.) has arisen to identify this aspect. Almost no progress has been made on c.a.e. as opposed to c.a.d. CAE assists the engineer to design his system and to readily transfer it to production. Help in the true engineering aspects other than standard logic and circuit simulators has not been well addressed. I expect system design methodology to evolve which takes into account array advantages as well as limitations, such as microprocessor design methodology evolved. This probably will involve clocked and bus-oriented design, modular design and self or auto-test features.

Specialized linear/digital arrays such as our LD types are but a glimpse of many specialized products of the future designed for specific applications or market segments. Methods of handling rom, ram and other specialized structures will surely be invented.

Testing is an aspect which has not been addressed at all in design. Testing will become the major in the next few years and will increasingly be addressed by features in the arrays. This will include features such as built in l.s.s.d. features both in array design and system design.

The table lists the forces driving array design. There are other forces affecting the market place but this lists only itemized design impact. Some forces, such as performance, are obvious design features. Others, such as vendor image, play a major role on various designs but with a much less obvious predictability. Each vendor

This article by Bob Lipp, president of California Devices Inc., is based on a paper given at the Second International Conference on Semi-custom i.cs held last November in London.

wants to be the first out with a new array, with the best array and with the most support. Obviously the vendor cannot do everything and his tradeoffs of such factors will affect new product introduction.

The table below lists some of the major factors influencing the development of gate arrays and ranks them on a five point scale.

Array design driving forces

	Perceived need	
Feature	Present	Future
Development time	A	D
Automation	A	A
New product stream speed to market	B	C
Layout efficiency-gates per unit area performance	B	B
I/O capability	B	A
Flexibility	B	B
Vendor support/ resources	B	B
Producibility	B	C
Pinouts/packaging	C	B
Economics-overall	C	C
Vendor image	C	B
Testability	D	A
Reliability aspects	D	B
Special application/feature	D	B
Bus-oriented design	E	D

Scale

A ——— B ——— C ——— D ——— E

Very important design consideration — *Not important perceived unimportant or not much room for progress*

Let's now postulate the arrays available in 1992.

The state of the art is 1μm silicon gate cmos arrays with sub nanosecond speeds. Typical operation speeds are now over 100MHz. GaAs arrays are available up to 500MHz at about four times the cost of silicon. Median array size is 5000 gates. The state of the art for specialized markets, such as data processing, telecommunications and defence ranges from 20 000 to 50 000 gates. Full 16 bit microprocessor, such as 68 000 or 8086, will be available on some arrays as a marriage of arrays and processors begins. 64K of ram/rom will be available also.

Let's now look further at this 50 000 gate array. Die size is to include as much periphery as possible for pinouts. Some vendors may be using flip-chip techniques.

Metalization system will be three-layer. First layer metal is strictly cellular metal. Between what used to be rows of interconnect is a full population of transistors. Each gate has associated with it a test bit, a memory cell. It may also include a rom code describing that gate. The design methodology allows everything to be fully automatically testable using l.s.s.d. or to coin another term, lrad (linear random access design). It may be easier to have a system which accesses in random each cell and tests it. The test pattern is generated by a rom structure on the top of the chip. On initiation of a test instruction, the chip will test itself functionally at operational speed and generate code verifying its accuracy. Other special circuitry will be used to fully test the i/o parametrics and operating speed. The structures can be used as ram when not in the self test mode. The three-layer interconnect systems will be used because it will be easy to add all the test features.

A major transition will have occured several years earlier. Chips will be pin-limited rather than be interconnection-limited as is now virtually always the case. This will make logic virtually free. The test features and any other operational features will be virtually free. Embedded ram/rom and linear elements can be embedded without any cost penalty even if they are not used.

Analogue functions will be ever more pervasive. This is because the arrays will be used in application where a selfcontained system or subsystem on a chip has to interface to the real world, which is after all mostly analogue. The combination of digital functions for signal processing and analogue functions for sensor and control interfacing will thus enhance the scope for application of arrays.

Digital processing is best done with processor architecture. This leads to such questions as what architecture is most suitable for arrays. What word length, what addressing, how much and what type of memory, what input/output circuits? Not the least problem is that of how to program those processors and how and where to store those programs. One rather attractive option is bit-slice approach, where the user can choose the architecture. The flexibility will be enhanced by the use of non-volatile and electrically programmable memories on-chip. As each application may need a different processor architecture and different size and types of memories, even the bit-slice array will not be able to cater for every possible requirement. The variety will be achieved by the development of specialized arrays.

How is design of this array accomplished? Turnround from final logic design to prototypes can be done in one week with direct write electron-beam machines. But front-end logic design will be longer as systems get more complex and design engineering tools still remain inadequate. New methodologies of system/logic design will be developing to take advantage of the array/processor marriage.

The route to this end will not be straight. The various forces described will have a major influence on the progress mode towards these architecturally advanced arrays.

Differential direct conversion

In the article in last September's issue by Paul Gili WA1WQH of Brookline, New Hampshire, Fig. 2 on page 47 went unchecked and unfortunately contained errors which would prevent the circuit from working. It should show the 7.5kohm resistor from pin 6 of $IC_{2(a)}$ going to the cathode of the 6.2V zener diode, instead of to ground as published. Similarly, the 10kohm resistor on pin 2 of $IC_{3(b)}$ should go to the same place instead of ground.

ICE Analogue Handheld Multimeters

Microtest 80

Sensitivity	DC 20KΩ /V AC 4KΩ/V
Accuracy	2% fsd
DC volts	100mV — 1000V
AC volts	1.5V — 1000V
DC amps	50μA — 5A
AC amps	250μA — 2.5A
Ohms	1Ω — 5MΩ
dB	+6 — +62dB
Capacitance	25μF — 25,000μF

£16.60

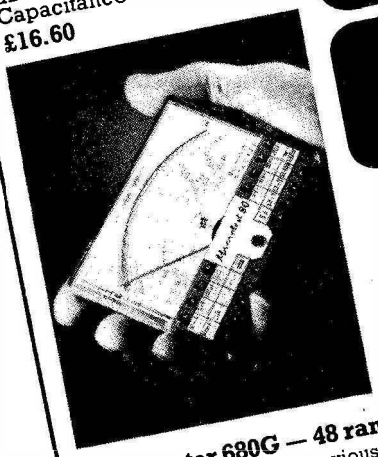

Supertester 680G — 48 ranges
(Additional functions to previous product)
AC volts to 2500V.
Ohms 0.1Ω — 100MΩ. dB from −10 to +70dB.
Frequency up to 5KHz.
£24.50

Supertester 680R — 80 ranges
(Additional functions to previous product)
DC volts to 2000V. DC current to 10A. AC current to 5A. dB from −24 to +70dB.
Accuracy DC 1% fsd
AC 2% fsd.
£32.00

Full Supporting accessories available.

Our distribution division now supplies Electronic Test and Measuring Instruments from Philips, Fluke, Hameg and ICE. Electronic Brokers Ltd, a company with many years excellent service to the industry, offer full technical support and demonstration facilities on the premises. All orders are despatched promptly from stock. Contact us for further information.
(24 hour telephone answering service).

LETTERS

FACTORIES OF THE FUTURE

Your December editorial on Information Technology raised the question of the speed of the response of academia to the challenge of providing appropriate courses.

You may be interested to know that Bradford University has started a new degree programme in Information Systems Engineering with the first intake of students in October 1982. The course is a blend of electronics, computer skills and telecommunications, and has been developed by a joint University/industry panel with representatives from British Telecomm, Plessey Telecommunications, GEC Telecommunications and GEC Computers.

We are fortunate in having in the School of Electrical and Electronic Engineering Professors of Microelectronics, and Communications Engineering, plus a Microprocessor Applications Centre, and we have received excellent co-operation from the School of Computer Science. The first group of 10 students are all sponsored by leading companies. We have achieved this new development without any extra funding from the government or industry, but we will only be able to develop the programme to its full potential if extra resources are forthcoming in the next couple of years.

D. P. Howson
Chairman of the Undergraduate School of Electrical & Electronic Engineering
University of Bradford

IDEAS FORUM

Like Mr Robinson (letters, *WW* January 1983), I am occasionally niggled by the lack of a source of what seems to me to be a very useful circuit, which would fit into a standard 16pin d.i.l. package. It is an 8bit comparator, with one of the comparands being set up on switches on the top of the i.c., and could be used to perform address decoding for add-on boards to bus oriented microprocessor systems (for example, the IEEE specification for the S100 bus requires that up to 24 address lines be decoded), and even in its simplest form it would save two 14pin packages and nine resistors (see diagram).

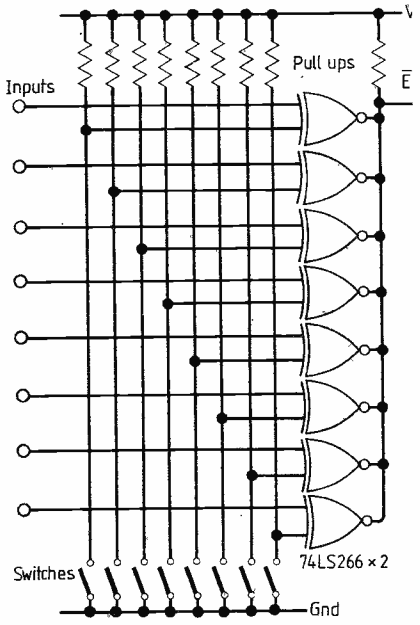

I do not know whether it is possible to manufacture an i.c. with switches in the top, so I wrote to Texas Instruments to find out, also sending them a copy of the circuit, but, although the letter was sent over a year ago, I haven't yet received any reply.

The circuit as shown only requires 11 pins, but a 16-pin package would be necessary to accommodate the eight switches. The five extra pins could be used to make the circuit more flexible by providing

complementary outputs (1 pin)
complementary enabling inputs (2 pins)
transparent latches on the inputs with complementary latch enables (2 pins).

I think that there is a misprint in the final sentence of the third paragraph of A. H. Winterflood's letter (same issue); surely it should read: ". . . the blicks aren't quite black and the whites aren't quite whate"?

Simon Sellick
Pershore

PHASE LOCKED CAVITIES

The letter by Hewlett (*WW* Jan. 1983) expresses concern and confusion about diffuse ideas of Jennison, Wellard, myself and others and suggests a unifying theme based on Professor Jennison's phase locked cavity research. I fully agree with this sentiment. The effects of resonance and standing waves upon energy deployment processes need to be better understood. In apparatus where beams are reflected back upon themselves the electromagnetic reference frame seems to adapt to the motion of the apparatus. This bootstrap effect may be assuring the null anisotropy of the speed of electromagnetic waves, found in our experiments, so favouring relativity in the ether controversy. One-way flow of radiation encountered by our motion through the cosmic 3K background does reveal anisotrophy at 400km/s and favours the ether.

Theory alone cannot solve these problems but new optical techniques avoiding the resonance effects do seem possible from the current work of Silvertooth in USA and Marinov in Austria. Hewlett's comments strike a very responsive chord with me on the theoretical side. Apart from Jennison's explanation of inertia by phase locked cavity concepts, my research shows that the anomalous magnetic moments (the so-called g-factor) of both the electron and the muon can be explained without recourse to quantum electrodynamics. The resonant cavity radius is set by the Compton wavelength, with an inner spherical boundary set by a balance of Larmor radiation and wave energy absorbed across the Thomson cross-section. This model gives the formula for ½g as

$$1+\frac{1}{hc/e^2-1\pm 4/\sqrt{3}}$$

and which, for the electron (plus sign) is 1.00115965 and for the muon (minus sign) is 1.00116589, because hc/e^2 is a fundamental constant known to be $2\pi(137.036)$ to a precision of one part in a million. These theoretical values are in exact accord with the measured values to within one part in a hundred million. Hence there is good reason to support Hewlett's proposition that a study of phase-locked cavities may help to unify our ideas.

H. Aspden
Chilworth
Hants

INTERFACING THE NANOCOMP

I read Bob Coates' article on interfacing the Nanocomp with some interest, as what he says about connecting a 6522 VIA contradicts my own experience. He says, rightly, that connecting together devices of different families can cause problems. It seems that different manufacturers' versions of what is supposed to be the same chip can also give rise to difficulties.

I tried connecting an SY6522, manufactured by Synertek, to the Nanocomp at base address 5000 hex. It failed to work; no read or write operations were possible. Careful comparison of the Synertek data book with the 6821 data sheets revealed one tiny, but crucial, difference. Whereas on the 6821 it does not appear to be necessary to make CS true before the E-signal goes high, the SY6522 quite ambiguously requires a settling time of 180ns from the addresses – including chip select – going true to E going high. I therefore removed E from the gating to the address decoder and simply tied the G input high. The problem then disappeared, though now the ram chips might possibly undergo spurious writes durimg the address and control settling time. However, on my Nanocomp this did not appear to happen, though I feel that perhaps I ought to have fed the G input of the 74LS138 from the Q and E signals ored together, using a 74LS32.

Interestingly enough, the Rockwell data sheets are not at all clear as to whether the CS inputs count as address inputs, and it may well be that Rockwell and other chips behave like 6821s in this respect; this would account for Bob Coates' lack of problems.

Gerald Bettridge
Eton College
Windsor

DEATH OF ELECTRIC CURRENT

December 1982, when Dogg questions Catt I think the editor should smell a Ratt, and check the telephone directory.

For the new (Theory C) model for the charged capacitor, go to the penultimate diagram, page 80, *Wireless World* Dec. 1980. Now assume that a small section in the middle of the top plate is lossy, e.g. there is a 50 ohm resistor. Now replace that 50 ohm resistor by a piece of 50 ohm coax going straight upward, out of the paper, from the centre of the top conductor. Conventional theory for reflection at discontinuities in a transmission line (and we now have three paths leaving this point; to the right, to the left, and upward) leads us to conclude that no energy will travel up the new branch. That is, a "steady" charged capacitor ignores deviations from perfect conduction in a plate of the

capacitor. This means that one plate could have been made of ebonite and the other could be a cat's fur. Now move the two 'plates' away from each other. The standing wave of energy current remains, reciprocating to and fro in the space between the now distant plates.

Theory C has nothing to say about the effect of rubbing the ebonite rod with the cat's fur. Rome was not built in a day.

Ivor Catt

Hooray for Ouida Dogg's letter in your December issue! A person after my own heart who wants a simple explanation which can be visualised.

Having myself done a fair amount or rubbing various insulators with cat fur (synthetic) and silk (also synthetic), I was led to believe that some substances have a greater "affinity" (sic) for electrons than others. In the course of the friction electrons were grabbed either by the cloth or the insulator – usually a rod. The one which lost electrons became more positive, and the other more negative. Because the rod was an insulator it was stuck with a charge until the electrons slowly re-distributed themselves, partly through the air and into or out of the rest of the world. The cloth, being grasped by a moist hand, usually did this quickly; but it could be held in insulating tongs.

This simple theory was easily visualised and easily supported by experiments with a gold-leaf electroscope (also synthetic).

Along came semiconductors, and we had to think of positive holes moving around. Soon afterwards Nuffield Science came into schools; and electroscopes, magnetometers, quadrant electrometers and other "boring" gadgets became old hat.

With due respect to those who *can* keep up with developments and even explain them fairly lucidly (thank you Mr Catt), let us praise such famous names as Scroggie (Foundations of Wireless), Camm (innumerable publications for beginners), Cocking (Wireless Servicing Manual), Sylvanus P. Thompson FRS (Calculus Made Easy, 1910 ff), and Cathode Ray of *Wireless World* in the 1950s. These were people who knew the score and could help us along.

John P. Marchant
Putnoe
Bedford

ANYTHING IS POSSIBLE

What a marvellous time we are having in Wireless World! In the October issue I find letters on the "Death of Electric Current", and "Modern Physics". In the articles we have Dr Aspden writing about The Ether and Dr Scott Murray giving us the Heretics Guide to Modern Physics. Together with all the letters about Relativity I cannot wait for each issue to come out such is the fascination of all this discussion, which I am sure would never be allowed in the Hallowed pages of magazines (sorry, Journals) such as "Nature".

Apart from a permanent uneasy feeling about what I was being asked to believe by the Relativists, I had never seriously considered that others would share my worries until the growth of discussion in your pages over the last few years. However, reading, and trying to digest this wealth of information and speculation has led me to speculate in turn.

For a start, I wonder whether we are about to fall into the same logical trap as did the mice when they did not use the answer that they obtained at great expense. They jumped to the immediate conclusion that 42 was not meaningful to them – fair enough – but, they then failed to take the correct step of actually analysing the new fact before asking a new question. The result was then as could readily have been predicted insofar as the further information obtained appeared either to have been worthless by being self-evident ($6 \times 7 = 42$) or totally confusing. Their correct course would first to have been to find out what 42 actually meant.

To illustrate in terms away from the world of fiction; if I say that $A=A+1$ is a correct statement, then I may well make sense to someone, but nonsense to somebody else. The confusion arises merely due to the interpretation of the symbol =. To somebody dealing with numbers, the statement $A=A+1$ is false, whereas to somebody dealing with logic, the statement could be true. Note that the points of view are not mutually exclusive in both directions. Only one of the two hypothetical people would place a single, dogmatic, notion of correctness on the statement that $A=A+1$.

Reading the last paragraph again, I see that I have unconsciously already started to make a further point, and that is to show that more knowledge does not necessarily make for more certainty but most of the time for less certainty. More certainty does not come from more and more facts per se, but very often only by better and better definitions. Mathematics is a very beautiful discipline, witness $E = h\nu$ (which) appears in two different articles in the October issue), but even such a simple statement depends totally upon extremely precise definitions of every symbol in that statement. Far too often as history and scientific literature show, fundamental disagreements arise merely by a simple misunderstanding. In fact, not only history, but many of the letters in Wireless World!

In my view, there can be only two possible questions to put to find "the meaning of the Universe and everything". The questions as I will put them in this letter are probably not very well worded and probably lack precision of definition, but they will do for a start. The questions should between them produce only one answer, but that answer will give certainty in one case and vagueness in the other, which at least is no novelty. In both cases, the answer is only a signpost to further exploration, but I believe that it is a signpost that has been ignored up to now.

Question 1. Are all discoverable facts open to only one unique, interpretation? Ignore the problem that a new fact often seems to present on its initial discovery, that is, that of seeming to be of different meaning from different viewpoints. Concentrate only on the eventual, complete, understanding of each and every fact.

Question 2. Are all discoverable facts dependant for their interpretation on the position of the observer in relation to them? I think that the position of the Relativists is that the answer to this question is Yes, but that for every observer, the answer to question 1 is Yes.

It seems to me that both questions are valid ones to put but that question 2 cannot be put to the majority of people without it invoking violent reaction, and hence will never be seriously considered. One corollary of question 2 is of course that anything is possible and all science, theology and other fictions will never allow such a conclusion to be drawn, in spite of the much quoted "there are more things in heaven and earth . . . ".

A C Batchelor
London N3

FAILURE OF DISTRESS SIGNALS AT SEA

During the past few years there have been several letters in *Wireless World* on the subject of emergency lifeboat wireless equipment – and on the low efficiency of 500kHz (600m) shipborne installations. In both cases the main problem has been correctly given as an aerial problem. Several correspondents have lately underlined salt-water spray and soot deposits on insulators as very active agents in low aerial efficiency.

The two active loss-agents in aerial wires and insulators are the inductive and the capacitive heating by the high-frequency energy fields (see later).

Radiation ability (radiation resistance) and matching loss belong to the system technology of present day practice and will not be commented upon here.

Most aerial engineers will probably agree with me that an aerial of height 0.1 wavelength can easily be matched to the feed-line and transmitter with an efficiency of 50% or more, of the maximum output from the transmitter. In fact a 0.1 wavelength vertical aerial, kite-born from a lifeboat and driven with 1 watt of transmitter power, should give a range of 500km at 500kHz (600m). But how to keep 60m of aerial wire supported in storm by a kite or balloon is beyond my ability to answer. Another limiting factor is the almost unsolvable problem of automatically compensating the wildly varying reactive components of the aerial as the height and inclination of the wire changes in heavy sea and wind.

Consider typical aerials in fishing vessels: whip-aerial between 12 and 18 feet (for the 2MHz band), efficiency between 0.04 and 0.07 (!) in *dry conditions*. Now scale up the aerial heights to 600 metre (500kHz) and we find impossible heights between 65 and 90 feet to give the same "performance".

This knowledge, together with the many letters on this subject in *WW*, enables one to state a basic fact: there is a minimum (equivalent) height below which no communication from small boats or vessels is possible as a result of economics and/or physics. This height is less than 0.1 wavelength, but not much. The cost of matching short aerials for multi-frequency operation with low-power equipment (say 100 watt or less) is a prohibiting factor – even in relation to Solas* – or so it seems.

Look a little closer at the physics of small radiating structures and keep in mind that only the use of 500kHz for emergency transmissions can guarantee the successful result of wireless direction finding equipment, from land-based stations as well as from ship and airborne equipment. At 2MHz direction finding is much

*Solas is the writer's acronym for Salt Water And Soot. – Ed.

† Some materials seem unsuitable for short aerials, especially bronze wire. Thin steel, possibly copper-clad, should be used; galvanized single steel is also worth testing, but it should be smooth so that it doesn't accumulate soot.

LETTERS

less efficient due to skywaves and local reflections. Also the "wavelength factor" is important as the size of the vessel compares with wavelength.

When the aerial is small, the losses due to inductive and capacitive heating will be the limiting factors of efficiency (since the extremely low radiation resistance can not be matched). We often use words like "skin-effect", "skin depth" and "proximity effect" in order to explain the limits of physics. In reality, the high frequency field – as guided by metallic conductors and electrical insulators – loses energy directly by absorption into the conducting materials present in the field (inductive heating) and also into non-conductive materials in the energy field (capacitive heating).

To indicate the scale of energy conversion rates of heating the metals, I shall quote the following figures (source: Telefunken, Berlin):

Inductive heating

– by convection currents	up to 0.5W/cm^2
– in an electric furnace	up to 25 W/cm^2
– in a flame	up to 1000 W/cm^2
– by r.f. generator	20000 W/cm^2

It seems obvious that induction loss (heating) is dependent upon the surface area of the metal in the field. The capacitive heating loss – or dielectric loss – takes place in capacitive cells – for instance on the surface of an aerial insulator – and the loss tangent will increase in salty and moisty conditions. The presence of moisture will create heating nuclei in which molecular activity is increased, leading to collision processes, etc.

Some conclusions might be drawn from the above facts:

1. Short aerials should be given a minimum surface.
2. Insulators should be avoided at low heights above sea! (How?) But reduced surface areas may help.
3. Easily cleaned (and dried!) aerials – for instance the "top-loaded unipole" types popular with Northern European owners – would be safer (but otherwise not more efficient). Strain-wire aerials should be made from single-core conductor of least possible diameter†. The use of copper is *not* mandatory!
4. Working emergency aerials suitable for lifeboats and rafts are yet not commercially available. This should surprise nobody. Such aerials will not be available unless steps are taken to introduce the fundamentals of physics into our everyday engineering lives! I do not know of a single case of the rescue of shipwrecked seamen in a lifeboat or raft due to the use of a lifeboat transmitter on the international emergency frequency of 500kHz. (There may be cases of rescue by use of 2.18MHz – if so, only at short ranges and in busy waters).
5. V.h.f./u.h.f. cannot replace 500kHz in direction finding ability and range for a long time to come. Also, losses in all radiating structures increase with frequency.

One principal question presents itself at this point: is there any possibility of entirely new concepts for high efficiency small aerials? Science fiction has got them! There is hope: we have one type of aerial structure which can overcome "normal" limitations – and time is more than ripe for unified action in this field.

Hans P. Faye-Thilesen
Teledynamikk, Brattlia
Hurdal
Norway

AMATEURS AND CB

I have just read the comment by the Home Office Press Officer (November page 66) Mr Wood. I wonder if anyone at the Home Office has any conception of the number of 'pirates' operating illegally. It is interesting to know that 14 people were prosecuted in 1981, since it was widely known at the time that there were around 1,000,000 stations in operation. It got to such a pitch that a watch was kept by amateurs on the 10 metre band, because some of these sets had what is known as super high band (they could go as high as 28,300). These stations were jammed.

A friend of mine was prosecuted in the late seventies for illegal operation of 160 metres. He was heavily fined, and his equipment was confiscated. But then, the magistrates didn't really understand what it was all about; nowadays they have CB themselves and the fines are very light, so it is not worth doing all the work, taking three bearings and hanging about for nights, when they are only going to be fined £25 anyway. The Post Office haven't the time these days; they are running round sorting cases of TVI and BCI. I know of no amateur who has had a station check recently.

The problem has not gone away, even now there is illegal a.m. and sideband on 27/28 MHz, and more sinister is the illegal use of the 6.6MHz which in my opinion deserves special attention. I suspect that Mr Clayton was basically correct and that the best comment the Home Office can make is 'no comment'.

Peter C. Gregory
Ashton-under-Lyne
Greater Manchester

Having bought my first issue of *Wireless World* (November) I see some comment in the letter page concerning CB by S. Frost of Edinburgh.

Perhaps by comments as a CB activist for the last 36 years are of value. CB was originally requested in Parliament in 1946 to put to good public use the vast quantities of War transceivers.

CB is a highly political subject. Politicians with their universal paranoia for power are fearful of effective public communication – particularly any mode that could become international. That is why we have an emasculated f.m. "service" on totally unique frequencies. The lack of any user responsibilities for legal CBers is a mere reflection of the Home Office determination that CB is no more than a childish toy to, regretably, he tolerated as far as possible.

The genuine CB enthusiasts are now being forced into the ham bands – class B licence issues have exploded over the past seven years, almost doubling each year. Yet these are not true hams – just Joe Public seeking freedom to communicate. The 2 metre-band is all but an alternative CB band! More to the point, a.m. and s.s.b. are the norm – so much for superior f.m.

Much emphasis is made of the excessive piracy of r.f. spectrum by illegal CBers with 80 and even 120 channel transceivers. Rubbish. We need a min of 200 channel frequencies. 2MHz of band width is less than a quarter that of a single tv channel. The rest of the communication users would do well to emulate the frugal use of spectrum when CB can on s.s.b. have 400 clear channels in 2HMz.

What is desperately needed is a responsible reappraisal of public radio communication – a.m./s.s.b. CBers are not the 100% irresponsible sham hams bent on law breaking, taking delight in causing wall-to-wall TVI. All that's wrong is being illegal. Give us legal status to come out of hiding and openly cooperate to cure interference problems. We actually want such responsibility, unlike many legal FMers who take the view that being legl it's up to Buzby to fix the neighbour's tv etc when FM walks all over it!

M. E. J. Wright
High Wycombe
Bucks

In my letter in the November issue I raised the social and political implications of the CB situation; and the question then arises as to whether such material should appear in a technical magazine. I would suggest that it should, because it so happens that the problem of illegal CB has a political cause. Is a technical magazine supposed to ignore the causes of a technical problem if the causes are non-technical?

It is necessary to be political to get to the root of the problem, because, as John Knox said in 1570: "If ye strike not at the root the branches that appear to be broken will bud again." It is sad but true that the root of many problems, including the CB problem, lies in trying to run a 20th-century state with a medieval morality wrapped up in a 19th-century constitution.

Furthermore electronics does not exist in a vacuum but is part of an interdependent whole, and must only be considered in the context of its total environment. This is because all apparently unrelated topics are in fact related. Let us consider the views of some scientists and engineers on this point;

> A N. Whitehead, 1934: "Any local agitation shakes the whole universe. The distant effects are minute but they are there. There is no possibility of a detached, self-contained existance."[1]
>
> F. D. Peat, 1972: "All systems are subject to interaction of varying strength arising from all other systems."[2]
>
> T. B. Tang, 1980: "All local properties are related to the global condition of the universe, and a part, however small, must not be regarded in isolation from the whole."[3]
>
> The inventors of Circards, 1978: "By exposing ourselves to the greatest variety of influences we increase the chance of seeing relationships between apparently unrelated topics."[4]

By setting out the social implications of technical matters we expose ourselves to a greater variety of influences than normal; and this enables us to see relationships between apparently unrelated topics. This in turn enables us to learn the true causes of things; which increases our ability to solve existing problems and prevent new ones.

It also enables us to take a step forward towards the social control of technology, which is necessary to prevent technology from doing more harm than good. Einstein's principal biographer has written as follows;

> "Instead of singing the praises of scientific progress Einstein asked why it had brought such little happiness. In war it had enabled men to mutilate one another more efficiently and in peace it had enslaved man to the machine."[5]

Technology must be strictly controlled (and even CB must be strictly controlled from a technical point of view); but when deciding how to control something the decision must be based on reason, not on prejudice or ignorance; and reason requires the widest possible discussion of all the issues involved, including the social, political, and economic, as well as the technical; and *WW* is a vital forum for the purpose.

There are not many magazines in the world with sufficient calibre to appreciate the importance of wide discussion. WW is one. Electronics Australia is another. Magazines like this are leaders in their fields and have survived whilst other magazines have come and gone; and one of the reasons they have survived is the same reason that Shakespeare has survived; because they deal with the whole of life, (from a technical point of view,) and not just a tiny part of it; and by dealing with the whole of life they cater for the thinking technician as well as the android technician.

Discussion of the social aspect of technical matters is not out of place in a journal of WW's standing but is part of its proper function. It is precisely because of such broadminded freethinking that WW's standing is as high as it is. Technicians do not live by technology alone.

S. Frost
Edinburgh

1. From Nature and Life, quoted in "The Challenge of Chance" by Arthur Koestler, page 235.
2. *Ibid.* p.239.
3. *WW* May 1980, p.81.
4. *WW* April 1978, p.81, col. 2.
5. "Einstein," R. W. Clark, p.409.

RED SHIFT

With regard to the conclusion that all galaxies are receding from us at a speed proportional to their distance from us owing to the Doppler effect explanation of the red shift, could it be possible that the red shift is not a manifestation of the Doppler effect but an energy loss effect due to the interaction of light in one direction with light and electromagnetic waves and particules in other directions? Since every so often light photons from one source must effectively collide with others from other sources a loss of energy or lowering in frequency in the direction of the observer might occur. Presumably there are a lot of possibilities for interactions of different radiations but maybe a photon in the presence of another photon causes an influence such that energy is emitted in another form or direction – thus lowering the frequency slightly in each case.

If better reasons exist for Doppler-effect explanation then perhaps someone might explain.

Nicholas K. Kirk
Dartford

BBC ENGINEERING

Just to keep the record straight, I should like to point out a few small errors that I have noticed in Mr Leggatt's article last November. My authority is Edward Pawley's monumental "BBC Engineering 1922-1972". With reference to page 48, column 3, the Alexandra Palace studios were set up in 1936, not 1938. The EMI system alone was used from February 1937, not January. And in the photograph actually shows a telerecording channel, for photographing a television image onto cine film. The word "telecine" in this country designates equipment for the transmission of films.

E. J. Stocks
Chelmsford
Essex

I wish you had been more careful, in the article on the 60th anniversary of the creation of the BBC, in discussing the future of the v.h.f. broadcasting band. We ought to be wary of that organization's plan to swallow up the band, leaving room only for the existing commercial broadcasters and a "fifth national network". If the BBC has its way, the 88 to 108MHz spectrum will be divided into sub-bands for Radios 1, 2, 3, 4, BBC local radio, commercial radio and the fifth national (educational?) network. Meanwhile, there would presumably be simultaneous a.m. broadcasts of these services on medium wave and long wave, except for the fifth network.

These plans obviously reflect the BBC antagonistic attitudes toward the potential (and the clandestine) community broadcasters. Furthermore, the "third-force" broadcasters outside the BBC-IBA duopoly would include operators willing to provide specialist music services, rather as the London pirates do now.

There is no room for the BBC to expand its v.h.f. network. Their philosophy in attempting to provide a service which is super hi-fi and at the same time suitable for listeners with very unselective portables is now being questioned. In addition, the BBC has been criticised for broadcasting the same programme on different services, which in turn are simulcasted in f.m. and a.m. In any case, it looks as if spending cuts will result in the combination of one of the national networks (hopefully Radio 2) with local and regional radio.

I conclude therefore, that the present empty 102.1 to 104.6MHz sub-band, the gaps between the national network transmissions, and the frequency space to be released by the removal of emergency services from the band, should be allocated to the non-profit-making, truly independent, "third-force" broadcasters. It is they who will provide an alternative to Muzak, pop, prattle and middle-class obsession.

A. W., Gateshead

The author replies

You are right in what you say, the Substitution of 1938 for 1936 for the Alexandra Palace studios is a typographical error: the decision to abandon the Baird system was taken in January 1937, but not implemented until February 7; and the caption to the photograph should indeed be 'telerecording' rather than 'telecine'.

I must confess that I was very late in completing the draft of the article and submitting it to *Wireless World*, so that there was really no time to review a proof and perhaps spot these errors.

I must say I am taken with the liveliness of the description of existing radio as Muzak, pop, prattle and middle-class obsession: but I suppose if one wanted one could categorize any radio programming in this way, even from 'third-force' broadcasters.

On average, 22 million people listen to BBC radio each day and it is our duty and our desire to offer these millions the best reception possible. They pay for the services via the television licence, and they are entitled to the improved coverage which would be achieved by the Band II plan proposed by the BBC and correctly described. It is clearly necessary to maintain duplication on medium and long waves at least until satisfactory country-wide coverage is available on v.h.f.

The BBC is certainly antagonistic to current private broadcasting on account of its illegality. We would be competitive rather than antagonistic toward any legally established system.

The Home Office is the national authority on the allocation and use of radio frequencies. It would be for them to decide whether a fifth v.h.f. network should be created and for what it should be used; and it is for them to decide to what extent community radio services should be authorized and allocated frequency space.

UNDERGROUND RADIO

I was gratified to see in your December correspondence columns the overseas interest evoked by my articles on leaky feeder communication.

Mr Clifford draws attention to his pioneering work in conductor-guided communication at low frequencies. His very interesting letter probably gives the first generally available description in this country of the equipment he designed, though I did know of an earlier reference than the one I cited; I should perhaps have listed it, and make amends below.

My theme was principally leaky-feeder communication, and my mention of low-frequency techniques for mine rescue incidental, but in that application the capability of guidance through a fall of roof by such robust conductors as rails and power cables is clearly of over-riding importance and is not being neglected in Europe.

It is reassuring to note from the letter of Mr Hughes that leaky feeders operate in the same way in the southern hemisphere, my first confirmation of that fact. His mention of a sheathed ribbon feeder is interesting. I briefly experimented with a p.v.c.-sheathed ribbon, but found the resulting losses greater than those of the proximity effects and surface moisture it was intended to avoid. I feel Mr Hughes will come to accepting the extra expense of a coaxial feeder for all 'serious' applications, especially in wet conditions.

The ranges he quotes are in exact accord with European experience using 300-ohm ribbon, and the frequencies of 27 and 40MHz he has chosen are probably the ideal. In coal mines, however, we would not be able to use the powers in excess of 0.5W he mentions – the present aim, in fact, is to limit mobile power to 50mW. His move towards the use of repeaters rather than multiple base stations is to be encouraged – though a.m. could then prove an unhappy choice in coalmining applications, where the need for intrinsic safety and its limitation on line-fed power usually imply that repeaters are highly non-linear devices in the interests of utmost efficiency. If his examination of different modes of modulation extends beyond f.m. and a.m. the outcome will be extremely interesting.

D. J. R. Martin
Leatherhead

Reference: D. J. Vermeulen and P. J. Blignaut, Underground radio communication and its application for use in emergencies, *Transactions of the South African Institute of Electrical Engineers*, April 1961, vol.62, pp.94-104.

LETTERS

THE DREAM OF OBJECTIVITY

If Peter G. M. Dawe had a superior programme for his organic computer and was not bogged down in the specialistic subjective of mass apparency, then perhaps he would be able to see more than one side of everything out of isolation.

The said programme is to widen the mind, using the curiosity to take in multitudinous bits of information in a multidisciplinary manner so to form the foundation for a pyramid. The first course of stones is built by taking in what might have been the same information in a later point of time and comparing it with the original information stored in the memory: so the discovery is made of systems, i.e. those commonplace devices in which mass is ordered by energy providing information of change. The second course of stones is built by study of those systems so to discover the laws of the scientists and the mathematicians, mathematics being no more than the universal analogy by which numbers are put to the dimensions of systems. The third course of stones is built by discovering from the study of the scientific laws the abstract laws which the said scientific laws obey – for instance, the abstract concept of pressure, resistance and flow is universal to absolutely all disciplines. The final top stone then represents the Ultimate Creator.

Perhaps Eddington had not got it quite right, but the way the Royal Society patted him on the head and told him to go home demonstrates precisely what a multidisciplinary diverger expects to see from a herd of specialistic animals who are only fit to be farmed.

The concept of pressure, resistance, and flow is rather interesting, in that it embodies change of velocity: the limiting asymptotes for velocity are creation and catastrophe, which I see as demonstrable along any radial geodesic of the universe according to the concept of mass-energy interchange.

If Mr Dawe, or anybody else, wishes to disprove the said concept, then he must first invent a massless sensor for energy, and indeed, a massless carrier for it. This, I suspect may turn out to be a little difficult.

James A. MacHarg
Wooler
Northumberland

SCIENCE AND POETIC IMAGINATION

I must disagree with Mr Bacon (Letters, September), on several counts.

Firstly there is very little difference between science and poetic imagination. Indeed, without poetic imagination there would be very little science. Science involves two main phases; the search for facts, and the interpretation of them. The first is largely done by rote, but the last requires imagination, because without imagination one cannot formulate the laws and principles which are necessary to make sense of the facts. The noted inventor Prof. Eric Laithwaite has put it this way;

> "You can be over-educated in science so that you never invent anything. I know a large number of people who can do the theory of electro-magnetism better than I ever could, and I've forgotten all the theory anyway; and none of these gentlemen ever invented a thing. It's very easy for me to regard them as 'superior' to me in my profession, but the number of patents I've got bears testimony to the fact that it isn't only scientific training that matters. There must be something else. It's too easy to take a complicated piece of machinery and analyse it down to the last detail, and be satisfied that you can say exactly how it works; but it doesn't tell you how to make it better."*

He says that "there must be something else;" and that something else is poetic imagination.

Indeed, the history of human progress enables us to formulate a law; other things being equal, academic qualificiations are inversely proportional to inventive skill. WW itself provides a lot of evidence for that. The articles fall into two main categories; those which take a complicated piece of machinery and analyse it down to the last detail, and those which tell you how to make it better. On the whole the authors of the first type of article tend to have strings of letters after their names which sometimes threaten to fall right off the edge of the page; whereas the authors of the second type of article tend to have few or no formal qualifications. It is the last mentioned type of person which makes the world go round. If a part of the world gets stuck in the mud the most that the highly qualified person can do about it is to produce lots of pretty graphs which tell you what type of mud it is. It takes the eccentric, unqualified genius to tell you how to get out of it.

Admittedly there are some exceptions to this rule, but it seems to have enough truth in it to be useful as a general guide; especially to employers.

(It is the failure of Britain's employers to recognise this law which is one of the causes of Britain's decline. Large employers tend to employ engineers with formal qualifications, in the mistaken belief that a person with formal qualification is better than one without. Consequently British companies are filling up with graduates who can take a complicated piece of machinery and analyse it down to the last detail but who have no idea of how to make it better. This in turn is preventing the companies from producing new products with which to compete with imports. The same applies to the civil services, which is almost exclusively run by Oxbridge graduates. Their academic qualifications are high and their imagination is non-existent. Or to quote someone else, their intelligence is sharp and their imagination blunt. And as it is the civil service which largely runs Britain, Britain goes down and down, as it has been doing ever since the civil service took over about 60 years ago.)

An example of poetic imagination appeared in the very same issue as Mr Bacon's letter. On page 59 and 60 we were told that the Japanese had increased the density of data storage on magnetic tape, by making the particules stand on end. This concept is brilliant in its simplicity and was almost certainly thought of by someone who is just as much a poet as an engineer. This kind of concept usually arises from a flash of inspiration rather than the steady application of set rules; and flashes of inspiration are one of the characteristics of a poetic mind.

Mr Bacon also says, "Cannon had been around for hundreds of years before Newton, demonstrating all three of his laws with classical elegance. The ballistics experts had it all in front of them but missed it. Newton didn't. Newton was a genius." That is true, but how is it that Newton saw what the others didn't? Because he had poetic imagination, just like Lucretius.

Another example of the two types of people that we are talking about is Darwin and Huxley. If you had given both of them an intelligence test Huxley would have run rings around Darwin, and yet it was Darwin who came up with the theory. When Huxley heard about it he explained "Why didn't I think of that?" The reason he didn't think of it is that he was too intelligent. He had a brilliant, sharp, incisive mind; and no imagination.

Back to Lucretius. Mr Bacon is right when he says that the views of Lucretius were unsupported by experiment. So, in 1905, was Relativity. The fact that Lucretius got a great deal wrong is understandable, because he had no means with which to test his theories; but that only increases the awe in which he should be held for getting so much *right*. He is one of the greatest thinkers of all time. Only a genius could get so much right without experiment.

Mr Bacon is also right when he says that sloppy thinking is still sloppy even when 2K years old, but that doesn't apply to Lucretius. The mistakes of Lucretius were not due to sloppiness but to the lack of any method of testing his theories. Aristotle also got a great deal right and a great deal wrong. Theorising without experimenting, he taught that a large stone will fall faster than a small one. That is something which *could* have been tested, but he failed to do the test; and to that extent he was a sloppy thinker.

S. Frost
Edinburgh

*From a tape of Radio 4, 11am, 26/7/78.

PICKUP ARM GEOMETRY

During the past decades, several important contributions toward the optimization of tone arm geometry have been published.

The work of Baerwald[1] is the most rigorous analytical treatment to date, and shows that distortions due to lateral tracking error, which result from the use of a pivoted tone arm, can be minimized by using optimum geometry. Equations to calculate the required offset angle and overhang are given in that article. All one need do is to select values for the effective arm length, and the desired inner and outer groove radii. Given these three parameters, the offset angle and overhang may then be calculated. When these figures are employed in the setting-up of a turntable, tracking distortion is minimized across the selected playing surface of a record. What has been done is to minimize the tracking error per unit length of radius, and not just the tracking error and inversely proportional to the radius.

Works by Bauer, Seagrave and Stevenson later followed[2] where optimum offset angle and overhang equations were also derived. So far as I am aware, no attempt has been made to compare the equations derived by these four people, with the aim of determining the differences between them and assessing the "best" design equations. I did such a comparison, and felt that

the results were quite interesting.

FACT: The design equations for optimum offset angle and overhang given by Seagrave and Stevenson are mathematically identical to those given by Baerwald! (The equations differ only in notation and arrangement). Only simple mathematics is needed to show that the equations given by the three authors are the same. Also, they produce, respectively, identical numerical values for the optimum offset angle and overhang, as would be expected. If in doubt, select a set of values for the three input parameters, substitute them into the equations given by the respective authors, and calculate the results. Further, the equations given by Stevenson to calculate the radius of the two zero-error points are identical to those given by Baerwald.

The equivalence between the works of the various authors can be readily shown. I have enclosed a copy of the mathematics which prove the equivalence, and provide a comparison and summary of the results.

One further point. Due to the range of inner recorded groove radii encountered on records, it makes the selection of that imput parameter (as an input to the design equations) quite difficult. Also, one can readily alter the position of the calculated inner zero error radius by making a change in the selected inner recorded groove radius. Stevenson also provided an alternate set of design equations which use the inner zero error radius as an input parameter, in lieu of the inner groove radius. Of course, the offset angle and overhang are the same as before, because his two sets of design equations are mathematically consistent.

Some recent conjecture argues that Stevenson's equations are not only more accurate than Baerwald's, but that the last's work is in error because of a faulty concept toward the reduction of tracking distortion. The difference really lies in the criteria used for selecting the inner recorded groove radius (and hense the location of the inner zero error point), and *not* in the mathematics of the optimum equations. The works of Baerwald, Seagrave and Stevenson *are* mathematically consistent.

Any mechanical alignment device, to be of use, must also be based upon the optimum design equations already mentioned. However, the designer of such a device is required to establish values for the inner and outer groove radii, so that distortion will be minimized between these two points. Therefore the validity of such a device is dependent upon the validity of the selected inner and outer groove radii used in its design.

The use of the equations derived by Bauer results in a small increase in distortion compared to Baerwald's, as Bauer used two simplifying approximations in his analysis. Bauer's expression for optimum offset angle is identical to that given by Baerwald, except Bauer's gives the angle in radians instead of its sine. Baerwald provided both exact and approximate expressions for the optimum overhang. The approximate expression is identical to the one provided by Bauer.

References 3 are most comprehensive on the subject of optmium tone arm geometry; references 4 are my earliest known uses of offset and overhang principles. However, References 4 & 5 are based upon the reduction of tracking error across the playing surface, and not tracking error per unit radius. But attention was certainly being focused in the right direction.

In conclusion, the equations derived by Baerwald in 1941 for the optimum offset and overhang have certainly *not* been superseded or outdated. The fact that Seagrave and Stevenson produced equations identical to Baerwald's certainly confirms the preciseness and validity of Baerwald's work; it is still the most definitive analysis to date on the subject. The real problem today is the selection of an acceptable inner recorded groove radius to use in the optimum design equations, and *not* which design equations to use. For that, the choice is Baerwald, Seagrave or Stevenson!

Now that we have a sound basis for distortion minimization, it is prudent to assess suitable criteria for its use. For example, where should the selected inner and outer recorded groove radii lie with respect to the three-equal-point distortion curve, or how should the two groove radii values be modified before being used in the design equations?

Do we have to use other criteria, or can we continue to use the equations directly, as originally intended? I believe there is much more to be done.

I will forward a copy of my complete analysis to any interested reader.

Graeme F. Dennes
2474 Hallmark Drive
Belmont
California 94002

References

1. Baerwald, H. G. Analytic treatment of tracking error and notes on optimal pickup design, Journal of Society of Motion Picture Engineers, Dec. 1941, p. 591.
2. Bauer, B. B. Tracking angle in phonograph pickups, *Electronics* Mar. 1945, p. 110
Seagrave, J. D. Minimizing pickup tracking error, *Audiocraft Magazine* Dec. 1956, p. 19; Jan. 1957, p. 25; Aug. 1957, p. 22.
Stevenson, J. K. Pickup arm design, *Wireless World* May 1966, p. 214, Jun. 1966, p. 314
3. The Audio Critic (vol. 1, nos) 1,4,5,6).
Kessler, J. D. and Pisha, B. V. Tonearm geometry and setup demystified, *Audio* (Jan. 1980), p. 76.
4. Wilson, P. Needle track alignment, *The Gramaphone* Sep. 1924, p. 129.
Two notes on gramophone adjustment, *The Gramophone* Mar. 1925, p. 381
5. Chamberlain, E. A. Correct pickup alignment, *Wireless World* Mar. 1930, p. 339

Additional sources

Lofgren, E. G. Non-linear distortion in the reproduction of phongraph records caused by angular deviation of the pickup arm. *Akust. Zeits.* vol. III 1938, p. 350.
Randhawa, T. S. Pickup arm design techniques, *Wireless World* Mar. 1978, p. 73, Apr. 1978, p. 63.
Gilson, R. J. The cartridge alignment problem, *Wireless World* Oct. 1981, p. 59.

CLOCK-TRIGGERED TRIANGULAR PULSES

In your November 1982 issue (page 57), there is a version of my circuit "Clock-triggered triangular pulse generator" (June 1982 issue, page 60) by C. C. Odukwe. I am afraid I can not follow Mr Odukwe suggesting the addition of two logic level shifters in the original circuit.

It is obvious that the circuit uses positive logic H=+5V, L=0V) to control the analogue switches (according to data sheet) and the D flip-flops of it. Indeed I see no reason at all to change the logic in order to control the switches, as there is no different logic in any part of the original circuit. In fact, the only reasonable modification would be to limit the ±10V output levels of the two comparators to the standard +5V, 0V logic levels. However, practice shows that this change is not necessary for the circuit to work properly and reliably. Furthermore, he suggested logic level shifters create more problems that those it is assumed they "solve". That is the analogue switches supplied by ±5V cannot be enabled by the 0V (suggested high state) and the circuit does not work at all.

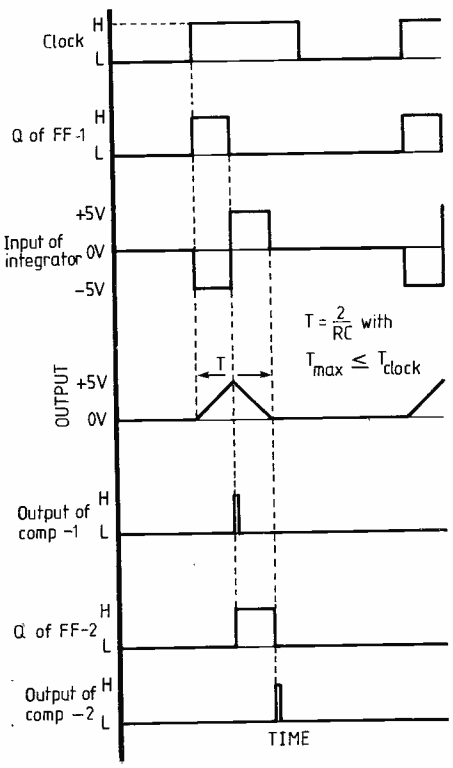

The supply voltages of the analogue swtitches are determined by te need for transmitting two direct voltages, −5V and +5V through the switches and are chosen to be V_{DD}=+5V and V_{ss}=−5V. Therefore, Mr Odukwe's note of a commonly known characteristic of Cmos analogue switches has been obviously taken into consideration.

Finally, my circuit is not a "clock-triggered trangular generator" which means the generation of a continuous trangular waveform and the "clock-triggered" could mean anything or nothing. The original circuit is a clock-triggered **triangular pulse** generator, which means that at every rising or falling edge of the clock input pulse only one triangular pulse is generated. The enclosed figure shows the actual waveforms at various points of the original circuit.

George Tombras
University of
Thessaloniki.

Pioneers of uhf television

Origins of uhf television go back over 40 years when it was exploited for a most remarkable use as part of the German war effort. Andrew Emmerson gives the archival details and dates the first use of cctv.

by Andrew Emmerson

To many people u.h.f. television broadcasting is still a relatively recent phenomenon. Although exploited soon after World War 2 in the USA to a limited extent, for practical purposes the u.h.f. bands were not used for tv broadcasting in Europe until the 1960s. Experiments with tv in the u.h.f. region had gone on previously, notably by amateurs on 70 centimetres, starting with W2LNP in the USA (1950), G5ZT in Britain (1952) and growing numbers thereafter. Also the BBC's first point-to-point link, provided from London to Birmingham by the Post Office in 1949, operated in the upper reaches of u.h.f. But the origins of u.h.f. television go back further, to the period 1940-43, when it was exploited for a most remarkable purpose as part of a little-known programme of the German war effort.

The story of Allied, and particularly British, development of radar techniques has been told many times, even if not in great detail, and coupled with understandable reticence on the part of the Germans since the war, this has meant that the German achievements have received rather less attention. Nonetheless, during the years from 1940 to 1943 the Germans were the first to exploit the u.h.f. region for television, while at the same time exploiting the use of closed-circuit television. In both cases it was in connection with missiles: in the first, u.h.f. television was being used to guide radio-controlled flying bombs, and in the second c.c.tv was employed for remote observation at the V2 rocket establishment at Peenemünde. Both are remarkable in that they pre-date later work by several years and, rather like Britain's pioneer Colossus computers, have received little attention until recently. Both developments came to light during the mid-seventies, though their existence had not previously been an official secret in the same way Colossus had been. The television-controlled missiles came to light in Brian Johnson's book *The Secret War* which accompanied a BBC-tv series of the same name. And the use of closed-circuit tv at Peenemünde was recalled by Prof. Walter Bruch at the Berlin radio exhibition in 1973. Of these two early non-broadcast tv applications the guidance system is the more spectacular.

The missile which used television for guidance was the Hs293D class of flying bomb and the principle was simple. The missile was launched and controlled by radio from a transmitter in a parent aircraft. A tv camera and transmitter built into the missile relayed a picture back to the bomb controller aboard the aircraft. The controller could 'fly' the missile from the relative safety of the aeroplane: when 20 km from the target the plane would turn for home while the bomb aimer would continue to 'fly' his missile, monitoring progress on the tv screen. Surviving reports indicate that the technique worked well in theory but in reality there was a fatal flaw. Just before impact, radio reflections off the target tended to break up the picture, leaving the bomb aimer very much in the dark. As a result, of the 60 to 80 flights eventually made at the Peenemünde research station on the Baltic coast only 2% were direct hits. Like so many other ingenious conceptions of the war, the Hs293D flying bomb with its tv guidance failed to see operational service. Nonetheless, the tv camera and transmitter were successful and deserve closer attention in view of their sophistication.

For capturing the images a complete miniature camera chain was developed by the Fernseh company in collaboration with the German Post Office. The standard broadcast scanning rates of 441 lines, 50 interlaced fields were followed, and the pickup tube was a Super Iconoscope fitted behind an electrically heated glass window in the nose of the missile. Codenamed Tonne A, the entire airborne video chain (including pulse and sweep generators) was contained on a single chassis, approximately 17 × 17 × 40 cm. Apart from the picture tube, 29 miniature valves of just two types were used (RV12P2000 and RL12T1). As the illustration shows, this was a significant achievement in miniaturization.

The output from the camera fed into another minor miracle of engineering, a compact 10 watt tv transmitter. This employed self-excited TU50 triodes in combined diode load/grid bias modulation, the valves specially designed for the purpose by the Fernseh company. Transmissions were double sideband with around 2MHz bandwidth. Contrary to previous broadcast practice negative modulation was used to improve reception under weak field strength conditions and so that interference would not mask the picture with bright spots. The wavelength in use seems to have varied from one unit to another according to manufacturer – both 70 and 73 cm were used. A small five-element yagi antenna completed the package, weighing a mere 130 kg. On board the controlling aircraft a compact tv receiver comprised r.f. amplifier, receiver and 8 × 9 cm display tube together with another yagi antenna.

In operation the range of this transmitter was up to 150 km aircraft to aircraft with 10 watts. Flight time of the missile lasted about six minutes, and power for the transmitter and camera was derived from a battery-driven 500 Hz inverter with im-

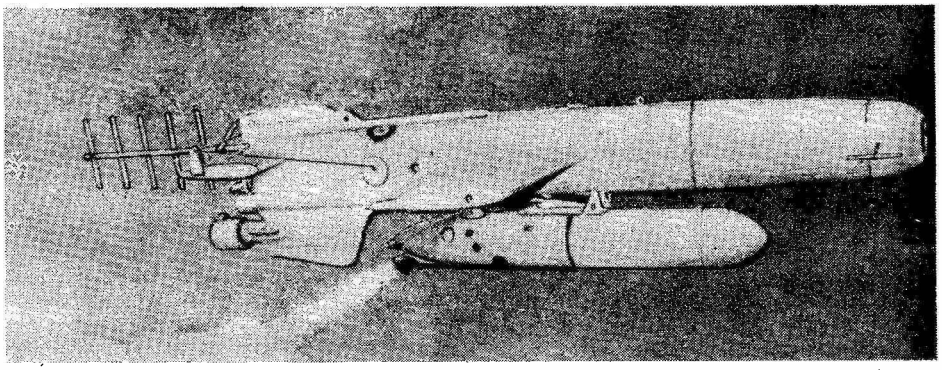

Artist's impression of the Hs293D missile showing 70cm aerial at rear for transmitting tv pictures back to the controlling aircraft.

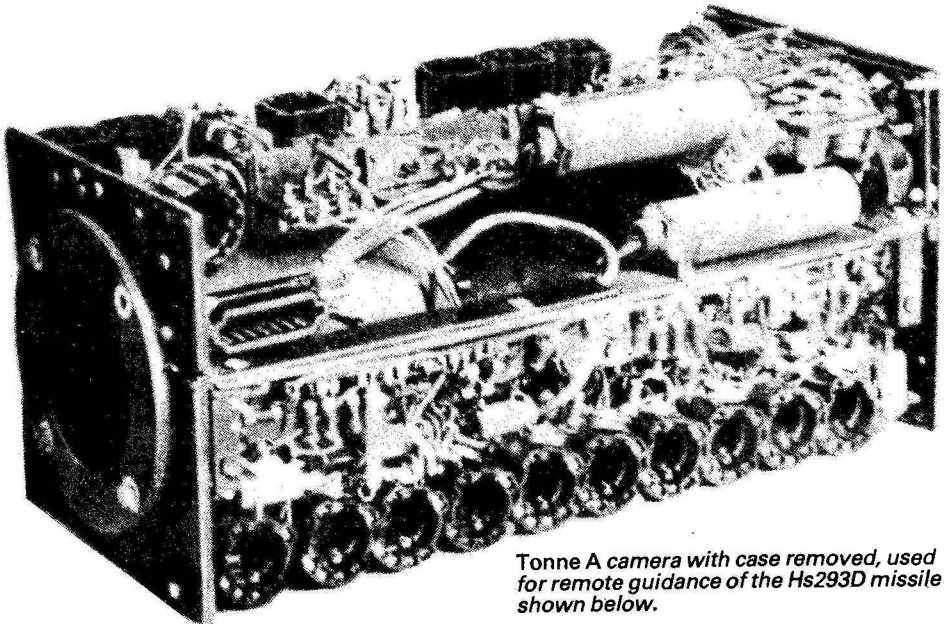

Tonne A *camera with case removed, used for remote guidance of the Hs293D missile shown below.*

portant voltages and currents stabilized. The camera – 400 were built – had remote iris control and a f2.8 35 mm lens. Codenamed Seedorf, the receiver used a 13cm diameter tube, 28cm long, giving a visible screen 8 × 9cm. Interchangeable modular r.f. sweep generator 'and video amplifier stage subchassis were used for ease of maintenance. Receiver sensitivity was 25 microvolts.

A film showing results from a test flight was shown to Hitler in 1943, and experiments using similar apparatus were made involving the remote control of tanks. The radio apparatus in this case used a 20 watt transmitter operating on a frequency of 86MHz (3.5 metres). Usable range was about 7km in moderately hilly countryside and up to 300km to an airborne receiver at 4000m height.

Today Prof. Walter Bruch is best known as the leader of the team who devised the PAL system of colour television used in many parts of the world. The terms Bruch blanking (and Hanover Blinds) are familiar to most tv technicians even if Bruch's further identity and his work at the Telefunken works at Hanover are unknown. But back in 1942 Bruch was leading a different team, making a unique contribution to television history. The research establishment of Peenemünde was also the site where V1 and V2 rockets were developed. Many of the early launches were distinctly unsuccessful and thought was given to a method of observation which involved the onlookers in less personal risk.

Thus it was that already in 1941 consideration was given to installing a c.c.tv system and Bruch was summoned to Peenemünde. The task was straightforward: to link Test Site VII, where the launches were made, with the control room, a distance of some 2½km. Two cameras would be used, one with a wide-angle lens to take close-up shots of the launching ramp and the other, equipped with a telephoto lens, would take in the whole panorama as seen from the nearby Test Site I. A direct radio-frequency link that would have been ideal was rejected on security grounds, so it was decided that the signals would be transmitted by cable. An r.f. carrier of 8.4MHz was used, with vestigial sideband transmission, which had not previously been used for broadcast tv in Europe (it was part of the American RMA specification of June 1939). Despite problems encountered in procuring suitable feeders and in laying the cables, high quality picture transmission was eventually achieved.

The compact cameras and monitors incorporated some features later to be used in many subsequent c.c.tv installations. The cameras used iconoscope pickup tubes and avionic valves and the third to be built after one was lost when the first V2 rocket blew up at launch was fitted with motorized optics and a substantial glass filter to protect the lens. For lining up the camera a diascope was used, a miniature slide viewer which projected a test card onto the pickup tube, thus removing the need for any external picture source. Picture monitors were fitted with proper rectangular tubes measuring 16 inches diagonally. But unlike so many of the rocket experiments the c.c.tv equipment performed very well, though the main development work of the Peenemünde establishment tended to overshadow this and the missile researchers paid scant attention to television; for them it was merely a means to an end.

* * *

These two developments do not exhaust the experimental use of television made by the Germans. In mid-1940 Fernseh technical experts developed and demonstrated a complete 1029 line high-resolution tv system. Employing a slide scanner as pickup device the apparatus gave exceptional results, exceeding 16mm film in image resolution. The pictures were transmitted experimentally with a 10watt transmitter on 1.5metres and also down a cable at baseband, where 15MHz bandwidth was achieved. Despite the superb results produced, the authorities remained unconvinced of the system's strategic value. Another device developed was a high-speed facsimile machine with long-persistence display on memory tubes; alternatively sensitized paper could be used to take prints.

Sources: My gratitude to Fritz Trenkle who made available the documentation from which this article was compiled, all derived from public records. Also consulted: Brian Johnson, "The Secret War" BBC, 1978; Rudert von Frithjof, 50 Jahre Fernseh, *Bosch Techn. Berichte* 6, 1979 5/6; Prof. Dr Walter Bruch, Peenemünde 1942, *Funkschau* 1974, 5.

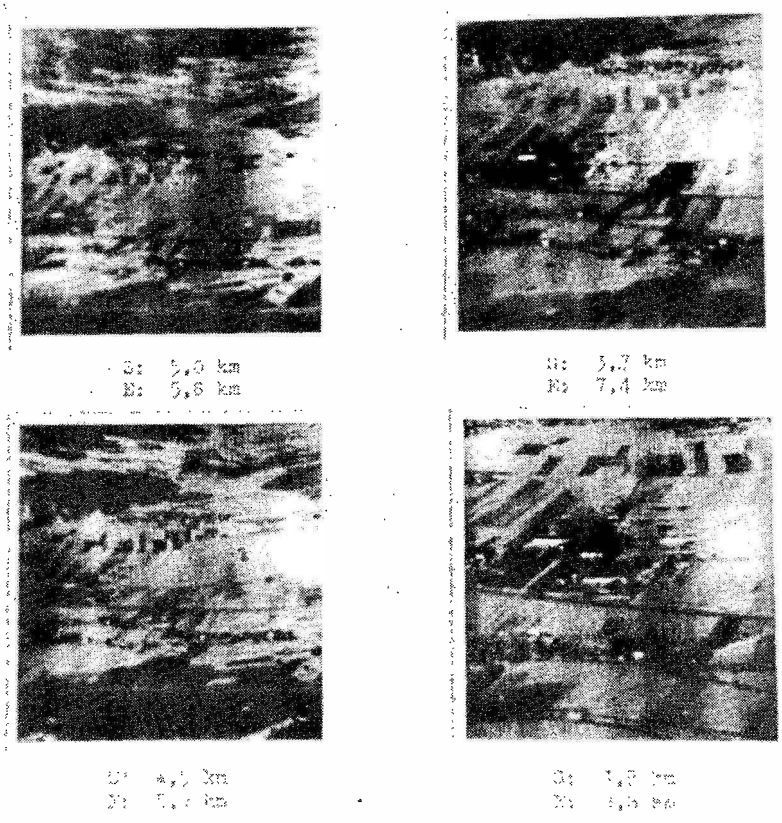

TV pictures taken from flying bomb and received in nearby aircraft were to guide missile to its target.

RS 232 to current loop serial interfacing

Circuits developed for an SDK85 single-board development kit permit downwloading of programs from a CP/M system; they can be used in any situation where a simple system is required to interface with an RS232 serial device

by L. Macari

The RS232 serial interface is used almost universally in small computer systems to communicate with printers, displays and other systems. Another method of serial communication, which is found in many industrial systems, uses a switched 20mA circuit to generate the serial data. The 20mA loop, as it is known, is more suitable for long distance use than RS232; at 1200 bit/s RS232 signals can be used up to a distance of 400 metres, whereas 20mA signals can be used up to 2000 metres at the same data rate.

The main advantage of current loop transmission is that a 5 volt supply only is required to generate satisfactory signals whereas the RS232 interface requires the use of ±12 volt supplies, which in most cases are not used anywhere else in the system. Certain applications require isolation between the transmitter and the receiver and this can be easily arranged with current loop communication as an optocoupler can be used as the current detector.

The main disadvantage of current loop interfacing is that there is no standardisation of circuitry and the control signals available with RS232 circuits are not usually provided.

The usefulness of both forms of serial interface usually means that both are provided with devices such as display units and printers. In many cases, however, the current loop option requires some minor modification to the circuit board, or to a pin header and alomost always involves opening the case of the device to gain access to switches, thus making its use inconvenient, particularly in a situation where the RS232 interface is used more than any other.

The circuits described here were developed for use with the SDK85 single board development kit to permit the downloading of programs from a CP/M system. The SDK85 has current loop serial communication as shown in Fig. 1.

Louis Macari is in the Microelectronics Educational Development Centre at Paisley College of Technology.

The circuits are slightly modified from those originally provided with the SDK85 to give isolation in the input stage and to remove the requirement for a −12 volt supply in the current loop output. The conversion circuits can be used in any situation where a simple system is required to interface with an RS232 serial device. The software for the download facility is described elsewhere in these notes.

Figure 2 shows the range of voltages required for the two logic levels in RS232 transmission, from which it can be seen that any voltage between −3 and −25 volts is detected by the receive circuits as a logic 1 and any voltage between 3 and 25 is detected as a logic 0. The normal voltages used at the transmitter are ±12 volts but ±5 volts is satisfactory for situations where the signal is not to be transmitted over too long a distance. The negative voltage is therefore the only one which needs to be generated and this can be done using a negative voltage generator such as

continued on page 66

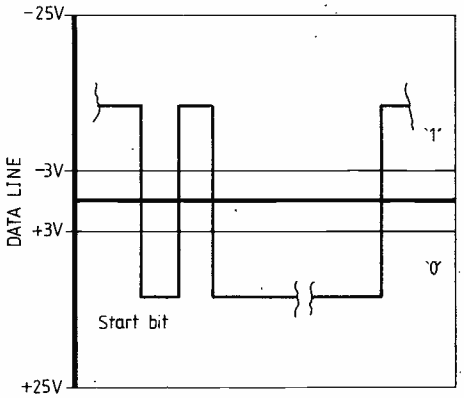

***Fig. 2.** Signal levels for RS232 interface show that any voltage between −3 and −25V is detected by the receive circuits as a '1', and between 3 and 25V as a logic 0.*

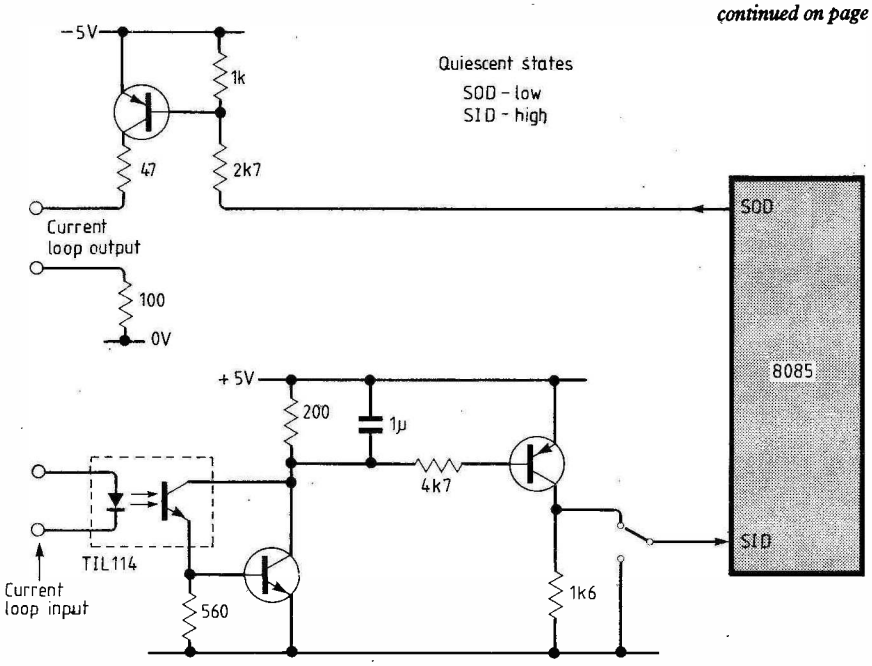

***Fig. 1.** SDK85 current loop interface, slightly modified to give isolation and remove the need for a −12V supply.*

Roger bleep for CB

A low-cost alternative to commercial plug-in units, which are designed to eliminate the burst of noise before the muting circuit comes into operation.

Commercial 'Roger bleep' modules which attach to a Citizens' Band transceiver via the microphone/switching socket, cost around £10. This design can be attached to a CB rig with as much ease as conventional types and can be built for a fraction of the cost.

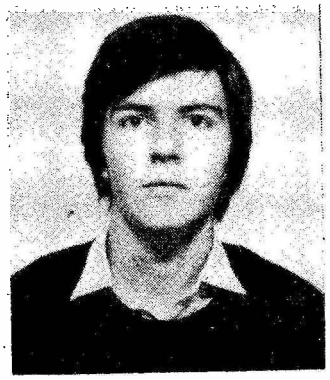

Mr Chalmers is a 17 year old student in the upper 6th form of East Grinstead's Imberhorne School, taking maths, chemistry, and physics at advanced GCE level. At present he is looking for a sponsorship and hopes to go to university to study communication engineering in October. Most of his free time is spent on electronics design, construction and problem solving. He is in the process of designing a selective-calling system for communication equipment (amateur/c.b.), of low cost and low component count, with 10^{10} codes available.

The 'Roger bleep' – a short tone transmitted after the p.t.t (push-to-talk) switch on the microphone has been released – is not just a novelty. Some CB systems have incorporated into their design a tone detector situated at the receiver's audio output in such a way that if a tone is detected the mute circuit will be activated to remove a burst of background noise that is heard between 'overs' due to

by P. J. Chalmers

the timing of the mute circuit. The noise that is heard is common to f.m. receivers, and a way to effectively remove this is to activate the mute circuit prematurely so that the time it takes to come into effective operation is the same or less than the time for which the transmitter is extended, hence during the period that the tone is transmitted, as in Fig. 1.

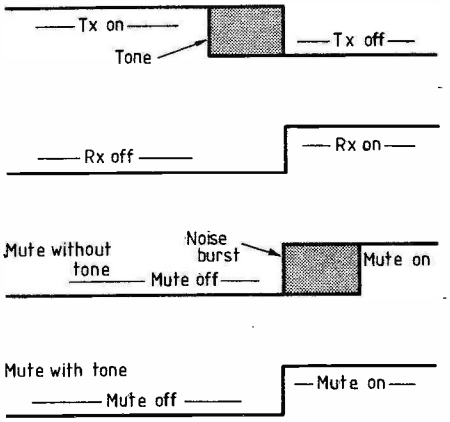

***Fig. 1.** Action of the tone burst, which switches the muting circuit prematurely to eliminate the noise burst.*

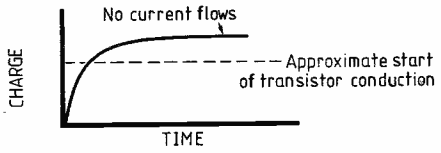

***Fig. 3.** Current rise in transistor when p.t.t. switch is opened.*

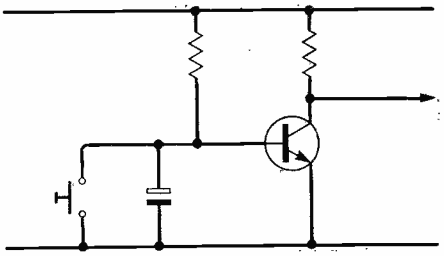

***Fig. 2.** Typical timing circuit, using a transistor. Full circuit has 741 in this position.*

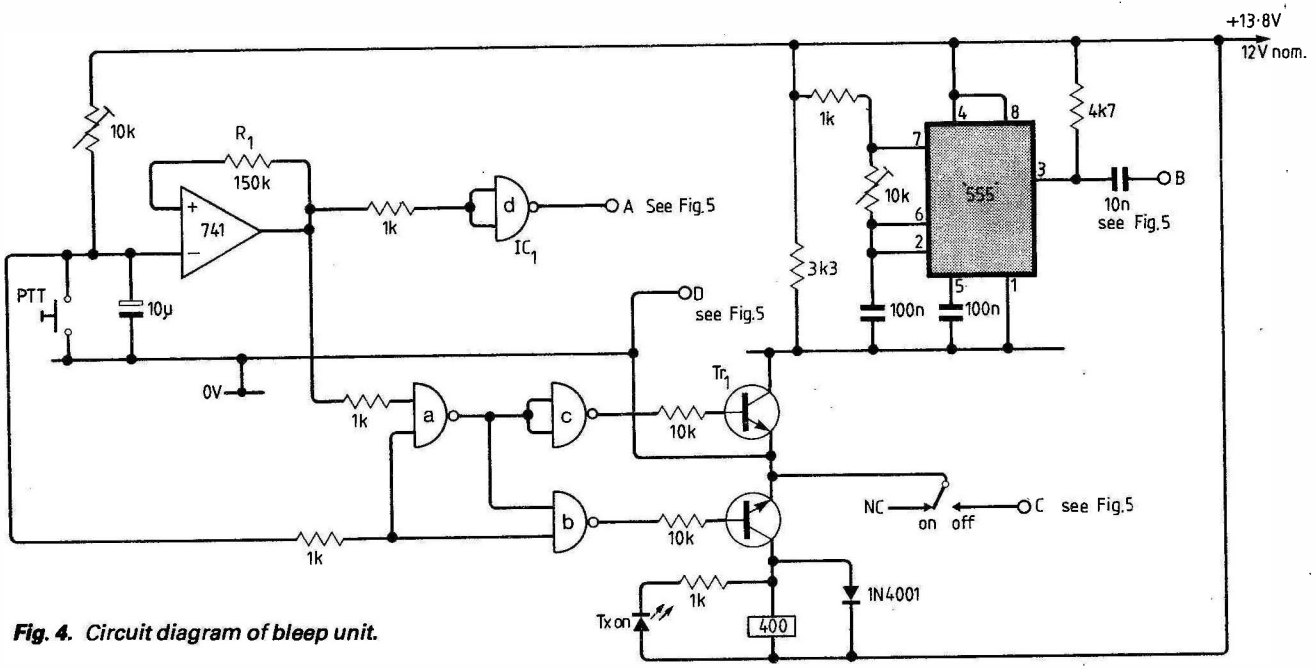

***Fig. 4.** Circuit diagram of bleep unit.*

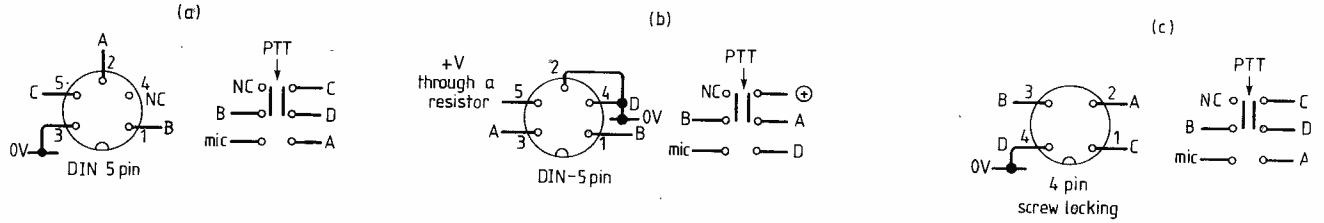

Fig. 5. Wiring arrangement of three typical socket types and p.t.t. wiring – all in 'receive' mode. Wiring of individual rigs may differ from those shown.

Circuit operation

When the p.t.t. switch is released a timing circuit is used to extend the transmission time by about an extra 300ms or so, in which time a tone is transmitted. Its action can be clearly seen if reference is made to Fig. 2, which shows a typical circuit with timing elements R and C.

With the switch closed, the capacitor is discharged and the base of Tr_1 is biased into non-conduction; thus the output of Tr_1 is high. With the p.t.t. opened, the capacitor charges exponentially (Fig. 3) until Tr_1 is biased into conduction, with a low state at its collector. During the charging of the capacitor, the logic state at the collector of Tr_1 is still high. Ideally, using this circuit, a Schmitt trigger should be used to give a sharp voltage fall. The 741 operational amplifier i.c. can be connected as a Schmitt trigger, as in Fig. 4.

The microphone is disengaged when the p.t.t. switch is in the receive mode and a tone generator takes its place. The transistor which switches the generator on and off has to be controlled precisely and this task is carried out using a specific logic code. In Fig. 4, the code is taken to the input of a Nand gate IC_{1a} and through an inverter to the base of the transistor Tr_1. The same code is used in a similar way to switch a relay on and off and a second Nand gate IC_{1b} performs this task. (The relay is used to connect the internal or external speaker to ground via the microphone/switching socket.)

The switch represents the p.t.t. switch and, when open, it is in receive mode. When closed, the timer output is high giving a code of high-low to the Nand gate IC_{1a}. Its output becomes low, since it switches before the 741, and hence Tr_1 renders the tone generator inactive. The second Nand gate IC_{1b} has the same code as IC_{1a}, which switches the relay on disconnecting the internal or external speaker. IC_{1c} inverts the timer output, producing a low state which activates the transmitter. The microphone is now enabled and everything should function as if the circuit had not been installed.

When the switch is opened, the circuit becomes effective because the timer input is still low due to the capacitor and variable resistor timing action; hence the output is high and the transmitter active. IC_{1a}, however, has both inputs connected high and a low output enables the tone generator. IC_{1b} is as before; hence the relay is on and the speaker is disconnected.

When C_1 is charged to the point at which the timer output goes low, the inverter disengages the transmitter and the output (IC_{1a}) goes high. With the p.t.t. switch still open, both inputs to IC_{1b} are high and the resultant low output switches the relay over to its natural state, connecting the speaker to ground. The circuit is now in receive mode and remains that way until the p.t.t. switch is depressed and the whole cycle begins once more.

continued from page 64

Fig. 3. Current loop to RS232 circuit uses opto-coupler to detect loop current (a). Negative voltage generator (b) uses 7660 i.c. RS232 to current loop circuit needs voltage limiting diodes.

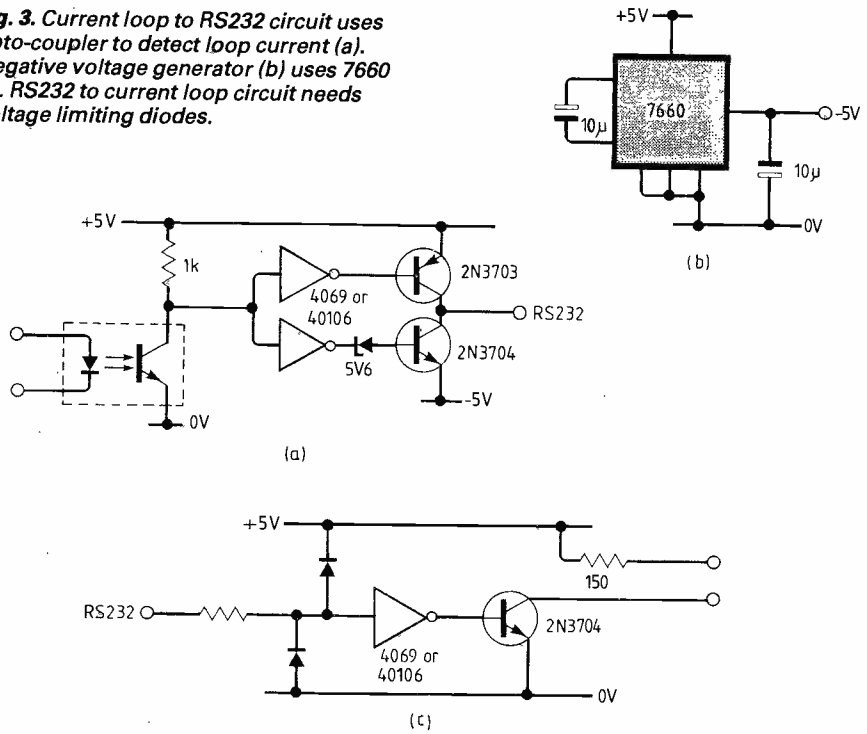

the 7660, driven from the 5 volt supply.

The current loop to RS232 circuit uses an opto-coupler to detect the presence or absence of the 20mA in the loop. As 20mA is the 1 state for current loop this has to be converted to −5 volts for RS232. 20mA flowing in the diode of the opto-coupler causes the phototransistor to conduct, pulling the collector low. This makes the outputs of the two inverters drive toward the high state. Thus the transistor connected to the positive supply is turned off and that connected to the negative supply is turned on, as the inverter output is sufficient to cause current flow through the zener diode. This makes the output −5 volts. When there is no current flowing in the opto-isolator, the inverter outputs will both be low, changing the state of the two transistors and making the output +5V.

In the RS232 to current-loop circuit it is important to remember that the circuit must be capable of being driven from any standard RS232 signal. As the voltage levels are well outside the range of input voltages for logic devices, it is necessary to provide some input protection to restrict the voltages to the safe working range. Thus the input terminal is connected to the inverter gate via a resistor, which can be about 10kΩ in value. Diodes ensure that the gate input cannot fall outside the 0 to 5 volt range (except for the diode drops). The diodes should be germanium diodes for minimum forward drop, but silicon diodes have been used with this circuit without any problem.

A negative voltage of about −12V applied to the input terminal will in this case cause the output of the gate to drive high, causing the output transistor to turn on and drive a current of approximately 20mA in an opto-coupler connected to the output terminals. There is no need for a base resistor in the inverter gatge. A positive voltage of about +12 volts causes the gate output to drive low, turning the output transistor on. A positive voltage of about +12 volts causes the gate output to drive low, turning the output transistor off.

A lesson in ergonomics from AVO

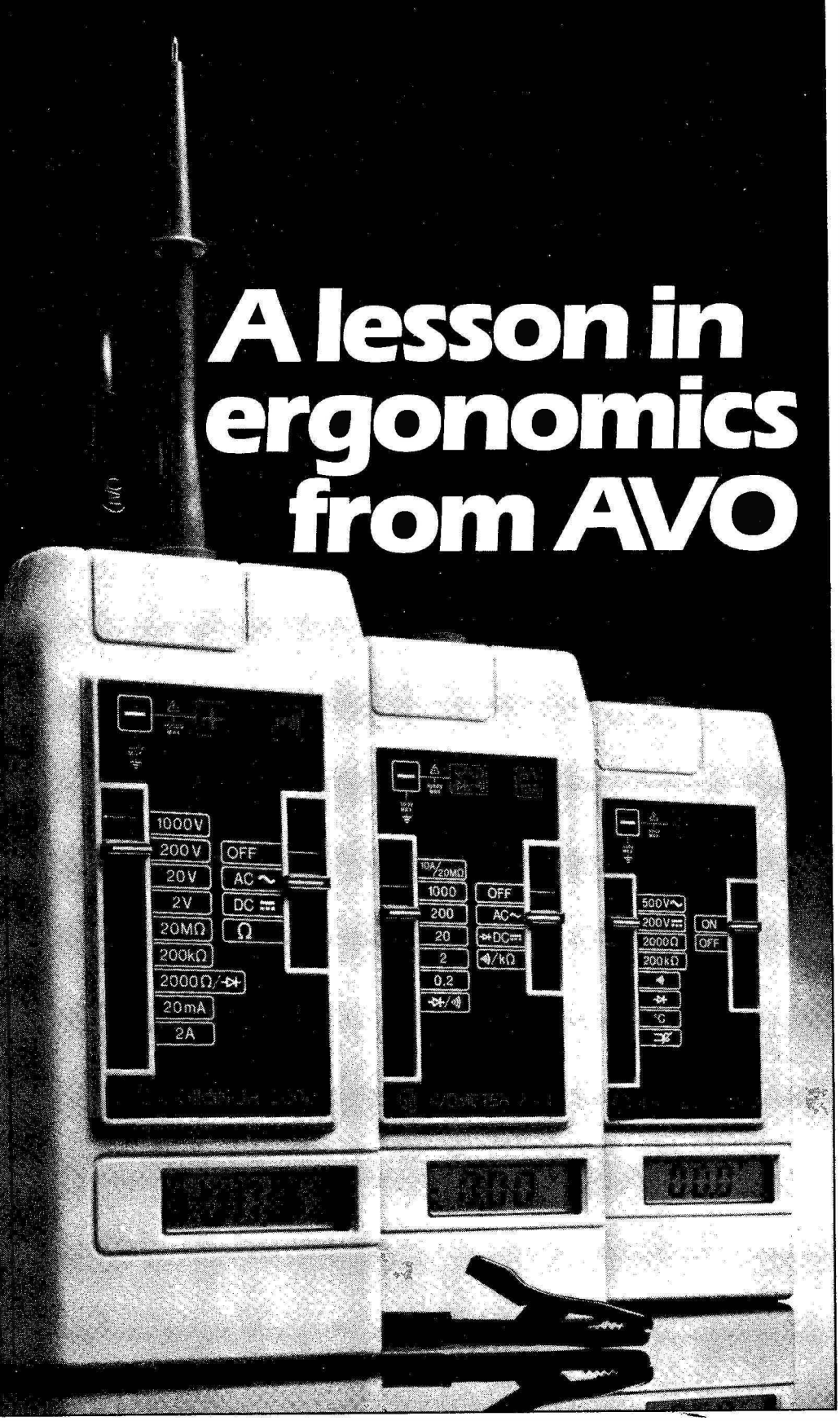

The AVO 2000 Series is the hand held dmm range you'd design for yourself, incorporating a combination of design features unmatched by any manufacturer in the UK.

There are direct entry prod facilities which, combined with the weight and size of the instruments, allow for true one-handed operation. The 3½ digit LCD is located at the base of the instrument to make the most of the available light. And positive slide switches are incorporated to give simple, dustproof, range selection.

The lead set is fully shrouded at both plug and socket end for improved safety and there is a special hook for PCB testing in the standard set. Heavy duty test leads are also available. The 2000 Series incorporates a three position stand, non slip safety pads and can be supplied in either a 'Test and Carry' case or a 'Walk and Work' harness.

It takes Britain's leading dmm manufacturer to appreciate the needs of the dmm user...worldwide. AVO 2000 Series is the result. Contact us or your usual distributor for further detailed information.

AVO DIGIMINOR 2000
An ideal tool for maintenance applications. An economically priced instrument with a special buzzer socket for simple continuity testing without reference to the display.

AVOMETER 2001
Features a socket specifically for current testing. Comprehensive ranges, with unit and mode displayed on LCD. Ensures a valid current measuring mode is selected – any discrepancy is signalled by an alarm.

AVO VEHICLE TEST 2002
Designed with co-operation from a world leader in vehicle manufacture and service. Accessory kit allows temperature and charging current testing. Heavy duty test leads and comprehensive handbook available.

AVO

The test of ability

THORN EMI

THORN EMI Instruments Limited
Archcliffe Road, Dover, Kent CT17 9EN. Telephone: 0304 202620. Telex: 96283

WW – 009 FOR FURTHER DETAILS

A Heretic's Guide to Modern Physics

1 Theories and miracles
2 Electromagnetic analogy
3 Impact of the photon
4 A more realistic duality?
5 Quantization and quantization
▶6 Waves of improbability
7 Limitation of indeterminacy
8 Haziness and its applications
9 State of physics today

Waves of improbability

The lid is taken off the wave theory of matter as it was developed by the Copenhagen School. Physics and metaphysics must be distinguished and kept separate. Schrödinger's wave mechanics has nothing to do with mystical "matter waves": that was the second great philosphical error of 1930's physics.

by W. A. Scott Murray
B.Sc., Ph. D.

In 1925 *M. le duc* Louis de Broglie, a post-graduate student who had been exploring a speculative extension of Special Relativity theory, presented his ideas to the Sorbonne in the form of a doctorate thesis. It is much to the credit of his tutors and examiners that his thesis was accepted and its gist subsequently published, for to say it was unconventional is to put the case mildly. His reasoning was somewhat as follows.

> "It seems that the basic idea of the quantum theory is the impossibility of imagining an isolated quantity of energy without associating with it a certain frequency".

(This idea actually came from a combination of Planck's $E = h\nu$ with Einstein's $E = mc^2$.) On this basis a frequency ν should be attributable to the energy contained in the mass m of a material particle such as an electron. The presence of a frequency suggested also the presence of waves of some kind; perhaps the apparent wave/particle duality of light radiation might have its counterpart in a similar particle/wave duality of material particles?

De Broglie cited several examples in which the trajectory of a material particle in a potential field resembled the path of a refracted light ray in optics. (The similar broad equivalance of the paths of photons, as particles, was already well known.) His most intriguing result concerned the "quantization" of the hydrogen atom (quantization type two, see article 5), in which he showed that the condition for an integral number of wave crests of his postulated "matter-waves" to exist around the orbit of an atomic electron was exactly the same condition, in mathematical terms, as that previously deduced by Bohr in his explanation of atomic spectra. It was very different in physical terms, however, and whereas Bohr's quantization had been felt to be somewhat *ad hoc* and empirical, the matter-wave hypothesis seemed to offer the possibility of a fundamental rationale.

The matter-wave concept caught on immediately, in a very big way. Within two years Erwin Schrödinger in Germany had formalized de Broglie's ideas – as 70 years earlier Maxwell had formalized Faraday's – into the beginnings of a mathematical technique which was to become known eventually as the wave mechanics. And Davisson and Germer in the USA were able to explain some puzzling experimental results on the assumption that their test electrons were *wave systems* that were being *diffracted* as they passed through the lattice of a crystal of nickel, for all the world as though they were hard x-rays or light waves in an optical diffraction grating.

This was just what the physics of the 1920s was waiting for. Matter-waves might be responsible for quantizing the atom! The arrival of a new set of waves in fundamental physics gave the old electromagnetic theory a boost and perhaps even a new chance of survival – these matter-waves might possess a physical ether! There was a complete new mathematics to be worked out from scratch: what fun that was for the mathematicians! The enthusiasm was tremendous, the progress rapid (if it really was progress). By 1930, only five years after de Broglie's first paper, Sir James Jeans was able to write in a popular book for a semi-lay readership:

> "The tendency of modern physics is to resolve the whole universe into waves, and nothing but waves. These waves are of two kinds: bottled-up waves, which we call matter, and unbottled waves, which we call radiation or light. If annihilation of matter occurs, the process is merely that of unbottling imprisoned wave energy and setting it free to travel through space. These concepts reduce the whole universe to a world of light, potential or existent, so that the whole story of its creation can be told with perfect accuracy and completeness in the six words, 'God said, Let there be Light'."

Now although this line of thought is consistent with modern "big-bang" cosmology, its neglect of the other side of the coin of duality – the observed corpuscular nature of both matter and light – reveals the bias of a mathematician: continuous functions are easier to handle mathematically than discontinuous functions. One can understand and sympathise with this initial enthusiasm, but surely somebody should have asked what these waves consisted of, and whether they were real?

In those early days several of the more discerning and conscientious of physicists, including Einstein, did ask such questions, and the answers were not at all favourable to de Broglie and the wave theory of matter. It very soon became clear that matter-waves could not be *physical* waves. The simplest demonstration of this lies in the fact that when an electron is at rest (relative to an observer) the velocity of its matter-waves as formulated in the theory is infinite. (Arguments about group velocity and phase velocity can be raised to confuse this issue but they don't alter its outcome.) Waves of infinite velocity simply cannot be physical waves. Moreover, as soon as the observer starts to move, the wave velocity suddenly becomes finite! There is something very wrong here.

The proponents of the wave theory, a group that I now identify as the Copenhagen School (Bohr, Heisenberg, Dirac *et al*), dodged this issue in a way that was to become characteristic of them. They declared that the wave velocity and also the frequency of the matter-waves are unobservable; and a true physicist, they maintained, should not ask questions about anything that he cannot observe, *even if that thing should be a physical thing.* (If you

think I am exaggerating please bear with me; I shall offer some examples later.) This philosophical wriggle was the origin of the brand-new Doctrine of the Improper Question, which was to prove so convenient to the wave theory and its successor quantum theory. It provided these theories with an almost universal let-out whenever they ran into logical difficulties, as they very regularly did.

Observable or unobservable, there can be no question of these matter-waves being physical waves. I believe it is generally agreed that they can be no more than mathematical abstractions. Electromagnetic waves transported physical energy and their theory was derived ultimately from the physical force which is observed to be exerted between two electric charges, but there is no such background of physical realism here. Neither de Broglie waves nor Schrödinger waves – for they are slightly different – can be associated with physical energy or physical force, and two points of absolute and fundamental significance must follow directly from that fact: matter-waves as formulated in the wave theory of matter cannot influence physical events, nor can they constitute the substance of which fundamental material particles are composed.

Probably about three-quarters of todays physicists will agree with that statement, while the other quarter will disagree violently. To this last group I say this: if you believe that a non-physical wave system can constitute a physical particle, then you believe that the atoms in your body and the electrons in your television set are ghosts. If you believe that a non-physical wave system can influence the motion of a brick, then you believe in miracles – for a miracle is a physical occurrence for which we can offer no physical explanation. A physicist's profession is the study of physical things. If you believe in ghosts and miracles you have missed your vocation: you should have been a theologian rather then a physicist.

Now in the face of that tough argument I don't believe the disagreement can long be maintained. To put the case more gently, the existence of non-physical ghosts and miracles in the *physical world* must violate the conservation laws, which almost every physicist accepts to be true and fundamental. In the *non-physical world*, of course, metaphysical fabrications, visualizations, "Castles in Spain", are thoroughly legitimate; information theory is a scientific theory that can be tested by experiment, but it is a theory in metaphysics, not physics.

We must be very careful indeed to differentiate between the physical world and the metaphysical world. In the last as we have already seen, activities like "prediction" and its associated "probability" have roles to play, but in the physical world of inanimate Nature they have none. I would guess that nine tenths of the confusion which exists in physics today can be attributed to past and present failures to maintain this very important distinction. To anticipate a little, how often does one hear a remark like: "the photocell current will increase because the probability of photons arriving has increased"? That just can't be true! An electric current is a physical thing that cannot be influenced by a "probability", which is metaphysical. It is equally wrong, and for the same reason, to say that television signals reach the H-aerial on my roof "because of Maxwell's equations". Maxwell's equations and the probability theory may be useful in describing physical events but they do not control them. From now on let us try to get this distinction right, for there are penalties if we fail.

To return now to our main, historical argument, I was saying that the "waves" of the wave theory of matter were certainly not physical waves, and it followed that they could not influence physical events. Maybe some other kind of matter-waves might, but not the waves which were formulated by de Broglie and Schrödinger. Moreover, there exists no valid indication, experimentally or *theoretically*, that an electron is not a physical entity possessing all the behavioural characteristics which by convention define a particle. These things being so it is intellectually dishonest to attribute to these waves the ability to guide electrons; and if matter waves cannot guide electrons then they cannot provide the physical mechanism which according to the wave theory is responsible for "quantizing" the atom, and other similar phenomena in microphysics.

But is there not experimental evidence that matter-waves guide particles? With one possible exception the answer to that is no.* The famous Davisson and Germer "electron diffraction" and all similar experiments can be explained by means of ordinary mechanics without invoking matter-waves, and two of their observed effects, never mentioned in the textbooks, are in fact incompatable with a wave explanation. The atom was quantized satisfactorily and accurately on the Rutherford/Bohr/Sommerfeld model, admittedly in an *ad hoc* manner, without recourse to waves: contrast the Schrödinger "standing-wave" model of the atom which, as the first triumph of the new wave-mechanics, actually predicts a finite probability of finding an electron in a position where, by the law of the conservation of energy, an electron cannot be. This is by no means the only violation by the new theory of otherwise-established physical laws. One *must* ask how this atomic model, and the theory apparently underlying it, could possibly have survived such definite failures.

The answer to that question is really very surprising indeed. Schrödinger's great work did *not* survive in the form of de Broglie's wave theory of matter, but in the form of the mathematical technique of the statistical quantum mechanics, which is something altogether different. Although its conventional name, "wave mechanics", and some aspects of its internal mathematics reveal its original source – a most fortunate triggering of Schrödinger's thinking by de Broglie's matter-waves speculation – the modern statistical quantum mechanics has nothing to do with waves and never, but *never*, refers to them in its working. It is an empirical set of rules for handling a particular class of problems in statistics and probability theory: a *calculus*, and not really a physical theory at all in the ordinary sense. Its two key equations, the Schrödinger equations, have been derived in 1966 by Edward Nelson on purely statistical reasoning without any reference to matter-waves. And finally, Schrödinger himself would have nothing to do with the latter excesses of the Copenhagen School. Even de Broglie drew the line at that!

The waveless, statistical interpretation of the quantum mathematics which is still in use today was invented by Max Born in about 1930, and it seems to have arisen as a result of a conversation between Born and Einstein. As I have mentioned earlier in connection with duality in light, Einstein proposed that light waves should be regarded as travelling regions of high photon density. Born applied this suggestion to the complex intensity of a Schrödinger wave, whose amplitude (a mathematical working-parameter) was referred to by Schrödinger by the greek symbol ψ (psi). Born associated this intensity with regions of high electron density, and his scheme was found to work spectacularly well. Whenever a suitable formulation of ψ could be devised – empirically – a high value of $\psi.\psi^*$ in the quantum mechanics was found to correspond to a high density of electrons in real life. It became convenient to say that it corresponded to a high probability of encountering electrons; this

Continued on page 78

* The exception I have in mind is the double-slit diffraction experiment with *electrons*, first performed in 1961 by Professor Jönsson of Tübingen. Like its counterpart in optics (the October article discusses the basis of the duality doctrine in light) it remains a miracle; modern physics does not even try to explain it.

Further confusions due to "wave" concepts

Difficulties of an obvious nature appeared early, denying the physical reality of matter waves. Attempts were made to bypass this problem by means of the new, *ad hoc* doctrines of observability and of the observer: "It is improper to ask questions about unobservable matters". Arguments on these lines spread confusion over many otherwise simple issues, but they failed to hide the truth that non-physical "matter waves" cannot influence the motions of real, physical particles such as electrons.

Although the wave theory of matter was thus disproved it was never rejected. Instead, and with serious consequences for physics, it was confused with the new statistical quantum mechanics of Schrödinger and Born an extremely successful calculus of probabilities, which apart from its original conception has no connection with matter waves at all. The true nature and limitations quantum mechanics can be described with precision by means of a simple analogy. The confusion of waves with probability theory was the second main factor that led to philosophical chaos in modern physics.

CIRCUIT IDEAS

Harmonic locking circuit

The function of a commutative filter which provides bandpass operations is well known. Here, the pre and post-filters are inserted into the signal path and the narrow passband of the commutative filter is then set by the clock frequency ω_0 only. If the pre-selection filter is omitted the N-path filter gives harmonic passbands by frequencies of 0, ω_0, 2 ω_0, . . . n ω_0, i.e. the circuit acts as a comb filter. The output of the comb filter which is built up using a multiplexer Fairchild 3705 gives a reference frequency f_r to the modulation input of the programmable timer 2240 (Texas Instruments), the output frequency of which is $f_r m/(N+1)$, where $1 \leq N \leq 255$ and $1 \leq m \leq 10$ (m is the number of a competent harmonic component). Choosing m and N in the stated range, any one of the 2,550 frequencies may be obtained at the output of the circuit. One needs only to calculate the RC term according to the m desired and to connect the counter outputs to give the desired value of N.

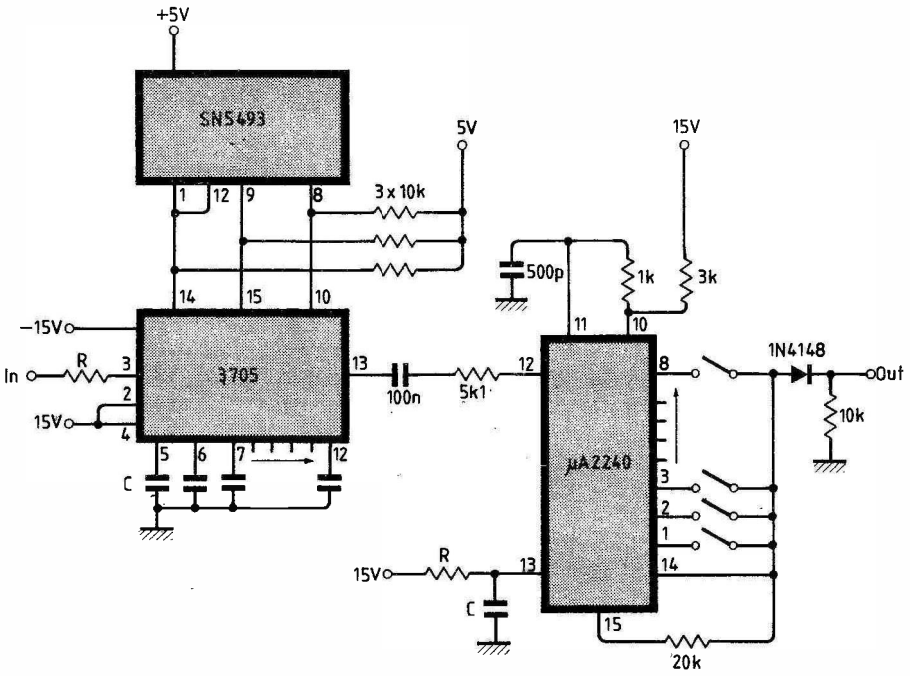

Kamil Kraus
Rokycany
Czechoslovakia

Accurate motor speed control

Both Malvar[1] and Barr[2] have described circuits in which the effect of a permanent-magnet motor's armature resistance (responsible for the speed dropping with increased mechanical load) is counteracted by deriving positive feedback, proportional to the armature current, from the voltage dropped across a resistance R_1 in series with the motor. The motor is hence driven from a supply with a negative output resistance.

Barr's circuit uses a complementary pair of output transistors, one to provide braking by connecting R_1 across the motor. An obvious development of this arrangement using two supplies: Fig. 1 provides an enhanced braking effect as, for as long as the motor continues to rotate, the opposing supply voltage is tending to provide a reverse armature current. The symmetry of the circuit means that this is true for both directions of rotation, corresponding to both polarities of V_{ref}.

The negative output resistance $-R_{out}$ of the circuit has to be equal to, or just less than, the armature resistance R_a, which Barr achieves by making $R_1=R_a$, requiring $R'=2R$.

Now as the load on the motor increases so do the armature current and the resultant voltage drop across the armature resistance, requiring a larger terminal voltage for the same speed. If the motor is to maintain constant speed in the face of torque fluctuations, the circuit must be capable of applying the necessary voltage. The limiting case is when the motor is stalled and behaves as a pure resistance R_a when the applied voltage rises to $V_{ref}/(1-R_{out}/R_a)$ which, if R_{out} is very close to R_a, may be so large that the amplifier saturates. If $R_1=R_a$ the motor voltage is limited to one-half this saturation voltage. Making R_1 smaller (say equal to $R_a/10$) will allow almost the full saturation voltage to be applied to the motor and improve the performance at high torque, as well as further improving the braking performance. The ratio R'/R now required may be calculated from the expression for the output resistance

$$R_{out}=R_1(R'/R-1).$$

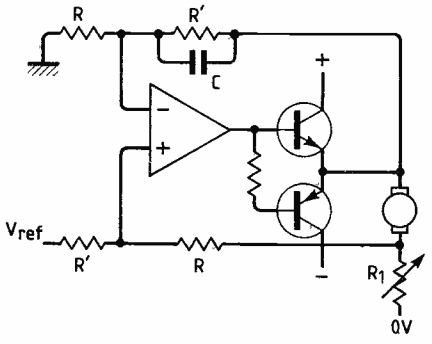

A third improvement to the circuit, if it is to be operated with R_{out} very close to R_a, is to add the capacitor in the negative feedback loop, to reduce the gain at high frequencies and give a worth-while improvement in stability.

A similar circuit has been used in an optical instrument to control a motor-driven micrometer which is required to position an object to a precision of better than 1μm. Speed variations were negligible, whereas with the motor powered from a constant voltage the speed varied by about 50% of its nominal value.

D. K. Hamilton
Department of Engineering Science
University of Oxford

1. Malvar, H.S. Accurate motor speed control, *Wireless World*, August 1980, p.47.
2. Barr, K.G. Accurate motor speed control with braking, *Wireless World*, June 1982, p.61.

Constant-current charger

Designed to give a constant-current charge of about 0.5A for U2-size batteries this circuit can be adjusted for any current less than about 1A by changing R_1. The input voltage can be anything from about 2V more than the total battery voltage up to 35V (the limit of the 317 regulator), typically six cells (about 8V) can be charged from a 12V car battery.

The first stage of the design was a simple linear version, Fig. 1, which works very well at low currents or low voltage drop. By the simple addition of one transformer and a diode the circuit is transformed into a switching regulator (C_1 & C_2 were needed for stability and to cut interference), and the power dissipation is greatly reduced.

The principle of the circuit is that the voltage regulator tries to maintain the 1.25V between its output and reference terminals, so by putting a resistor R_1 which passes all the load current across them the load current is maintained constant instead. The value of R_1 is 1.25

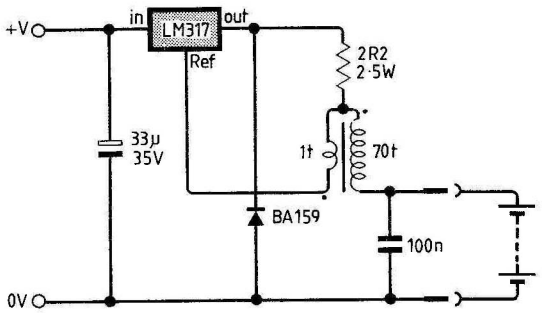

divided by the current required. When the transformer is added the feedback winding adds a small change of voltage to the reference terminal which turns the regulator full on until the current builds up to the new reference. When the current stops rising, the offset is reduced so the current is reduced, and so on until the regulator turns off. The current then continues to pass, but through D_1 until it drops to the new reference voltage.

Mike Davies
Fifield
Berks

Sound triggered flash

If instead of connecting the flash cord to a camera you connect it to the circuit shown you get a sound triggered flash. The circuit feeds directly from the relatively high voltage present at the flash cord terminals. The high-value resistor usually wired in series with the high voltage supply in the flash is a constraint on the amount of current that can be drawn. The above circuit will draw around 10 μA, half of it being the s.c.r. leakage current.

Sensitivity is good enough for most applications: snapping fingers between 10 and 60 cm from the mic will trigger the flash. Sensitivity is influenced by the type of flash used and by the type of microphone, which must be a piezo type with a high output. I found that the cheapest types are the most suitable because of the high output; distortion and linearity are not important factors in this circuit. Closing the switch introduces a small delay between the sound and light. The 330 pF capacitor is necessary to make the device insensitive to externally generated electrical noise which seems to affect this high impedance circuit.

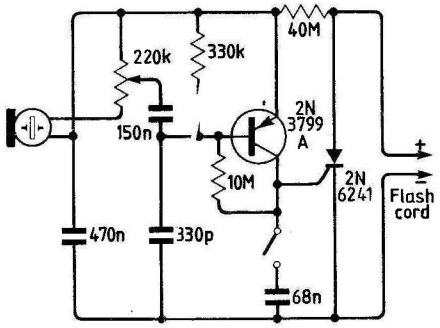

D. Di Mario
Milano
Italy

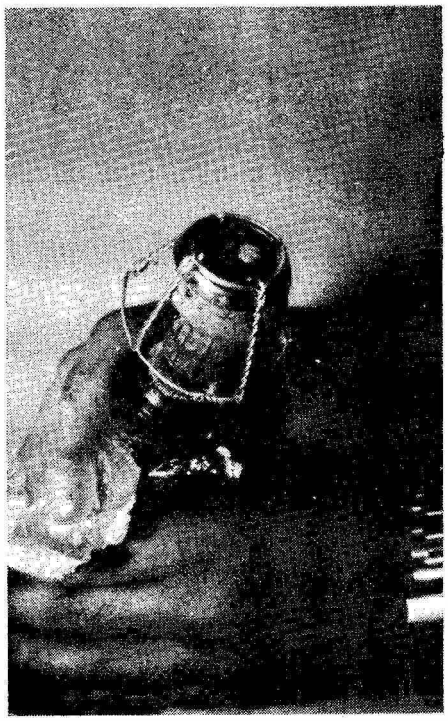

Battery back-up for cycle lamps

This circuit is designed to provide a high efficiency battery back-up for dynamo-powered cycle lamps, giving long battery life and maximum brightness. The original system, like the majority of cycle lighting circuits, used an alternating current dynamo. As it is more convenient to use d.c. in conjunction with the battery, the circuit of Fig. 1 rectifies the output from the dynamo. This slightly unconventional circuit gives a smaller voltage drop across the rectifier. When A is positive with respect to B, Tr_1 and Tr_4 are turned on and Tr_2 and Tr_3 are turned off. Current flows from A via Tr_1 to the lamps and then via Tr_2 to B. When B is positive with respect to A, current flows from B via Tr_3 to the lamps and then via Tr_2 to A. As the saturation voltage of a transistor is only about 0.2V, compared to the 0.6V forward voltage of a diode, this circuit gives a significant advantage over a conventional bridge rectifier, i.e. 0.4V drop rather than 1.2V.

A simple method of providing battery back up would seem to be the use of a smoothing capacitor and a single diode, as Figure 2, but the large currents and low frequencies make the necessary capacitance prohibitively large. To overcome this problem, the circuit of Fig. 3 was developed.

Capacitor C_1 charges via D_1 to nearly the peak voltage of the rectified dynamo output and discharges via R_5 and R_6 between peaks with a time constant of a few seconds.

Resistors R_5 and R_6 form a potential divider, the output of which goes to the non-inverting input of a 741 amp connected as a comparator. The potential divider ensures that the input voltage does not rise above the supply rail voltage and damage the op-amp. Diode D_3 is not normally conducting, but gives protection from momentary high peaks.

Output from the voltage comparator switches Tr_5 on when the capacitor voltage

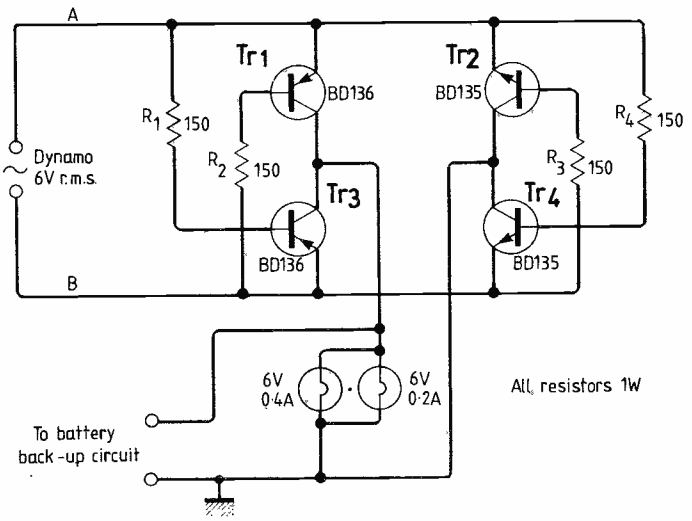

Fig. 1

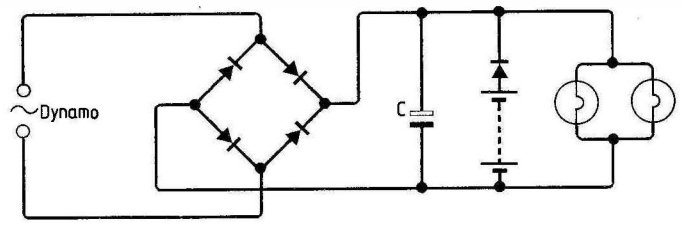

Fig. 2

decays to a point determined by the potential divider of R_7, R_8 and R_9; R_8 is adjusted to switch to the battery at a suitable speed. Diode D_2 provides protection to the circuit when the dynamo is working.

The prototype uses four HP11 type cells but alkaline cells are recommended as the battery is subjected to long periods of little or no current drain, followed by brief periods of comparatively high current.

The prototype circuit is built in two sections corresponding to Figs 1 & 3. The smaller circuit of Fig. 1 was placed in a small potting box, encapsulated with epoxy resin and fixed to a small aluminium plate, bolted to the dynamo bracket. The rectifier is wired permanently into circuit.

As the dynamo itself was originally "earthed" through its own casing, it needed isolating by replacing the steel mounting bolts with nylon ones and placing a plastic sheet between dynamo and cycle frame.

The circuit of Fig. 3 and its battery were constructed in a separate case carried in a rear pannier, with connection to the cycle circuitry through a two-pin plug and socket. With the unit unplugged or switched off, the cycle lamps will still operate in their original manner.

R. C. Vincent
Sherfield-on-Loddon
Basingstoke

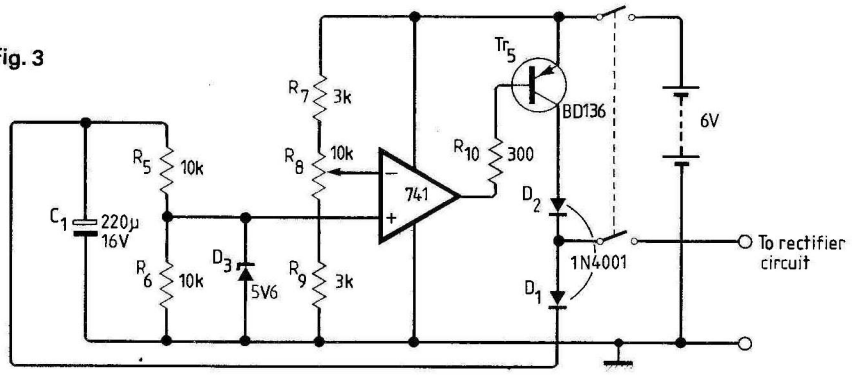

Fig. 3

390kΩ, oscilloscope traces would appear as in the diagram. The gate will open only if IC_2 is shorter than 10 ms, and then only for the difference between the two. The shortest pulse at an led which can be seen with a lens in subdued light is about 0.2 ms. Components C_5 and Tr_3 form a primitive monostable to stretch the out-of-balance pulses from Tr_2 to about 2 ms; LED_2 then stays clearly on as C_4 is increased until balance is reached. The end point is sharp.

By operating S_4 the input to IC_2 is held low until the press switch S_5 is operated. A single pulse is then passed via C_6 to IC_2 which delivers a pulse, defined by S_2 and S_3, at its Q output instead of a pulse train. The device was developed during an investigation into the irritating habit of apparatus used in judging fencing bouts electrically registering hits on the metallic floor when the point slides across it.

R. Parfitt
Croyden

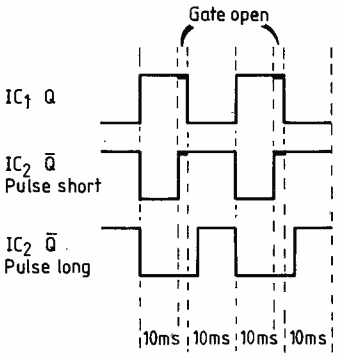

Trigger pulse generator

Two 4047s can be used to generate pulses of 0.1 to 10ms either singly or at 1 to 100 ms intervals. IC_1 is an astable multivibrator whose $\bar{Q}$ output, via Tr_1, lights LED_1 on alternate half cycles (cycle time 4.4RC). Wafer switch S_1 selects one of 12 resistances between 10k and 10MΩ. Capacitors C_1 and C_2 with S_1 at its maximum of 10MΩ set the cycle time to about 1s. By timing the flashes at LED_1 with a stopwatch and adjusting C_2 they can be set to 1/s with accuracy better than the 1% resistors of S_1. The intermediate resistances at S_1 are chosen to suit the purpose of the generator but must include a position for 20ms i.e. 20kΩ for pulse calibration. IC_2 is a monostable connected for positive-edge triggering. Pulse length is 2.48RC and is selected by C_3, trimmed by C_4, and decade wafer switches S_2 and S_3. Diodes D_1 and $D_2$with Tr_2 form a two-input and-gate. With IC_1 calibrated and set to a repetition time of 20ms, and IC_2 set for a 10ms pulse by $S_2 = 0$ and $S_3 = 10 \times$

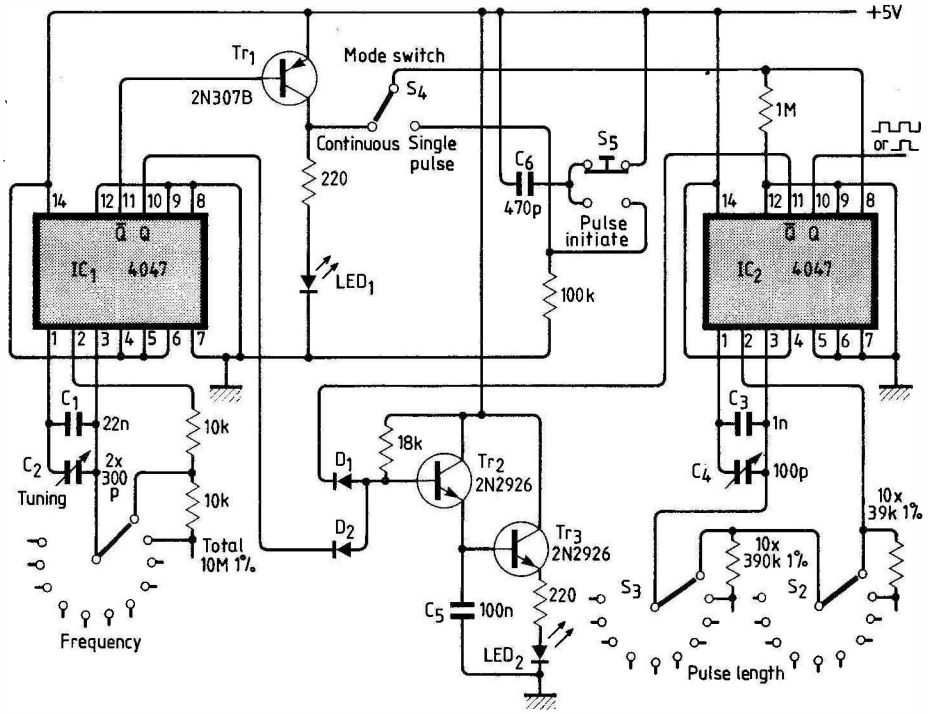

Static b.c.d.-to-binary converter

The circuit described by Falko Kuhnke in October Circuit Ideas is unduly complicated. Conversion can be effected using just a pair of 4008 i.cs, rewriting

$$10X_{10}+X_1 \text{ as } 8X_{10}+2X_{10}+X_1.$$

Multiplication by eight and two in binary requires only shifting and this can be hard wired.

N. G. de Mattos-Shipley
London EC4

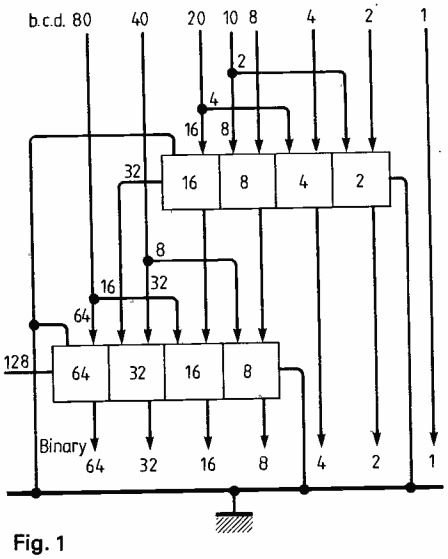

Fig. 1

The circuit described by F. Kuhnke can be simplified if we take into account that the b.c.d. numbers 10, 20, 40 and 80 may be split up into powers of 2, as 2+8, 4+16, 8+32, 16+64. If these values are added, together with the 1, 2, 4 and 8 inputs in a parallel adder, the output is a binary-weighted word with 64 as the highest value. The idea may be expanded to higher b.c.d. values, 100 to 800, 1000 to 8000, etc. as shown in my publication: The coversion of b.c.d. words into binary numbers", *Microelectronics Journal*, vol. 11, no. 2, pages 29 to 34.

For comparison, the conversion of the numbers 1 to 99 is shown in Fig. 1. Only two i.cs with four full adders (7483) each are needed.

C. van Holten
Technische Hogeschool, Delft

Binary output										b.c.d.	
2^9	2^8	2^7	2^6	2^5	2^4	2^3	2^2	2^1	2^0	Value	Input
0	0	0	0	0	0	0	0	0	1	1	11
0	0	0	0	0	0	0	0	1	0	2	12
0	0	0	0	0	0	0	1	0	0	4	13
0	0	0	0	0	0	1	0	0	0	8	14
0	0	0	0	0	0	1	0	1	0	10	21
0	0	0	0	0	1	0	1	0	0	20	22
0	0	0	0	1	0	1	0	0	0	40	23
0	0	0	1	0	1	0	0	0	0	80	24
0	0	0	1	1	0	0	1	0	0	100	31
0	0	1	1	0	0	1	0	0	0	200	32
0	1	1	0	0	1	0	0	0	0	400	33
1	1	0	0	1	0	0	0	0	0	800	34

Fig. 3

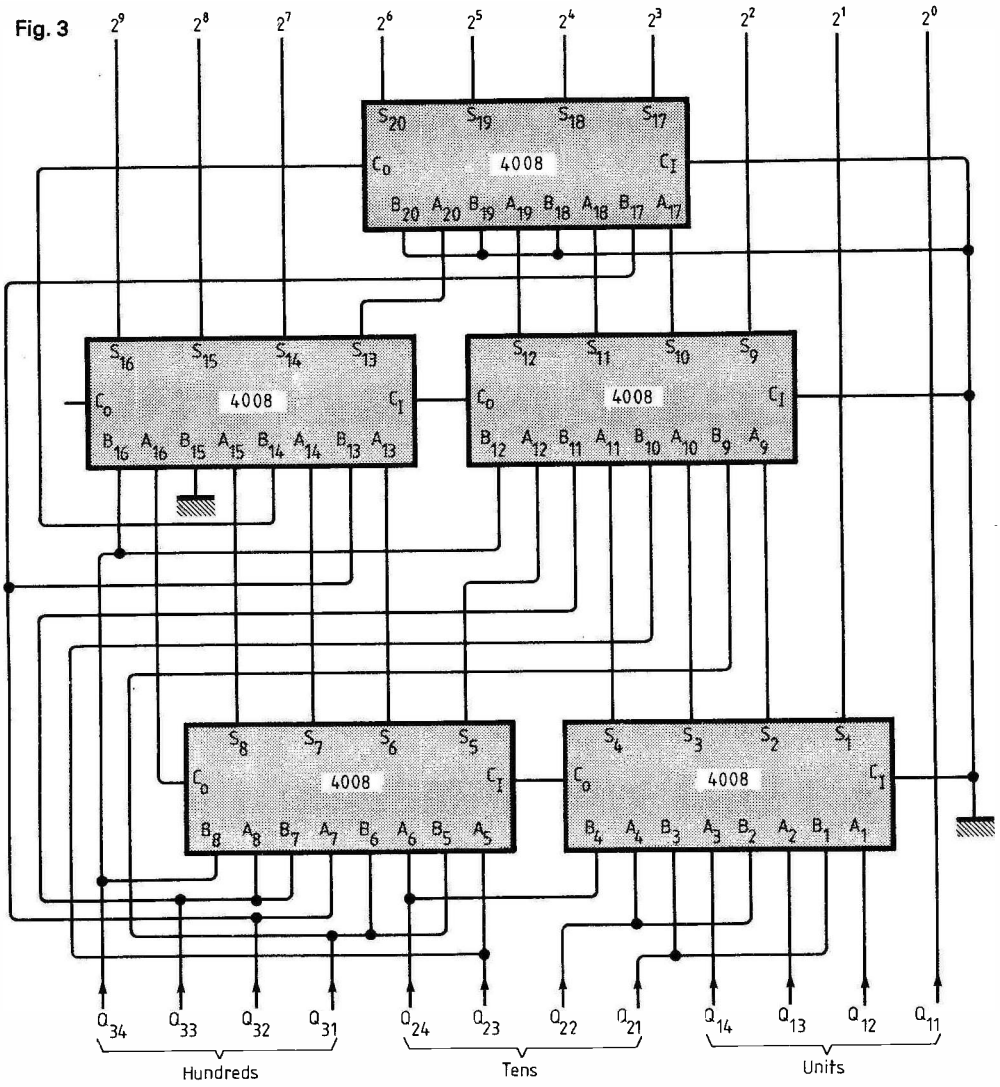

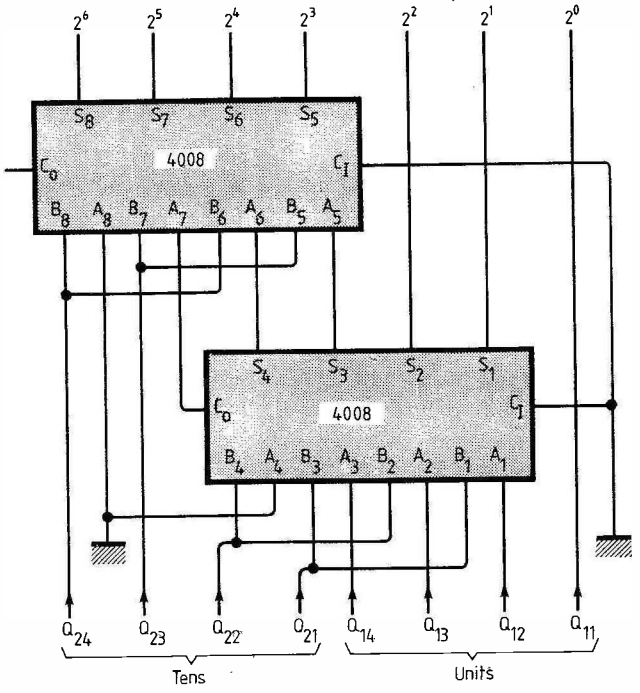

Fig. 2

The clue to the simplicity of Fig. 2. circuit is to be found in the table and the philosophy may be extended to derive a three decade converter.

The table shows the binary representation of the b.c.d. outputs from units, tens and hundreds counters. To obtain a binary representation of any decimal value in the range 000 to 999 it is only necessary to add the binary columns together of the appropriate rows, e.g. the binary representation of 647 may be obtained by adding the binary columns of rows Q_{11}, Q_{12}, Q_{13} (=7) to Q_{23} (=40) to Q_{32} and Q_{33} (=600). The maximum number of bits that need to be added together for a two-decade converter is three (see binary column 2^3). For a three-decade converter the maximum number is thus four (again, see binary column 2^3). Fig. 3 illustrates a three-decade converter using five four-bit full adder i.cs.

A. J. Ewins
North Harrow

Analogue recording using digital technique

This circuit records low frequency analogue signals onto an ordinary audio cassette recorder using a digital technique. Low frequency recorders are used in data logging, process control engineering and medical applications such as electrocardiogram and blood pressure monitoring and diagnosis.

Domestic cassette recorders have an amplitude response in the audio range, usually around 50Hz to 10kHz for a reasonable-quality unit. To record low frequency signals from zero frequency upward, some form of modulation is required to shift the base-band frequency to a point within the range of the tape deck. Analogue methods of modulation include direct frequency modulation, pulse duration modulation and mark/space ratio modulation. Each of these methods may be implemented by fairly simple modulation circuits, and demodulation can be done basically by squaring and low-pass filtering the modulated carrier wave to retrieve the low frequency information.

Such methods suffer from an inherent disadvantage – the wow and flutter which is present in all tape mechanisms appears as a direct modulation of either carrier wave frequency, the pulse duration or mark/space ratio. The replayed signal has a noise component which has a frequency range which covers that of the signal spectrum and whose amplitude is dependent on the degree of wow and flutter present. This noise can be reduced by using a high quality cassette mechanism and using a true mark/space ratio decoder, but it can never be completely eliminated.

However if the analogue signal can be converted to a digital form and the digital signal recorded on tape then noise due to wow and flutter is eliminated leaving only the noise due to quantizing error and to bit error in the recording process.

by Thomas Loughlin

The circuit shown uses an eight-bit analogue-to-digital conversion and can record on an audio cassette recorder at 1200, 2400 and 4800 baud. The eight-bit data is recorded using one start bit and two stop bits giving a sampling rate of around 430Hz and consequently a theoretical maximum recorded signal of 215Hz. The high record rate is achieved by using a technique of phase encoding in which zeros and ones in the serial data stream are represented by positive or negative edges, as shown in the encoder waveforms.

The input signal is converted to digital form by an 8703 (IC_2). The input to the a-d converter must be unipolar and in the range 0 to 3.9V (determined by 390kΩ resistor), so scaling and level shifting is provided by IC_{1a} and IC_{1b}. Timing in the record circuit is accomplished by connecting the transmitter register empty (TRE) flag output of the uart IC_3 to initiate the conversion input of the a-d converter, and then connecting the busy output of the converter to the transmitter buffer register load (TBRL) input of the uart. The uart then loads the eight-bit data and transmits it serially in continuous fashion. Phase encoding is carried out by IC_4, IC_{5a} and IC_{6d} and a 50mV output signal is available to feed the recorder.

The replayed signal is fed to phase equalizing circuit IC_{12b} which compensates for phase shifts incurred in the recording process and helps to restore the original waveform. Amplifying and clip-

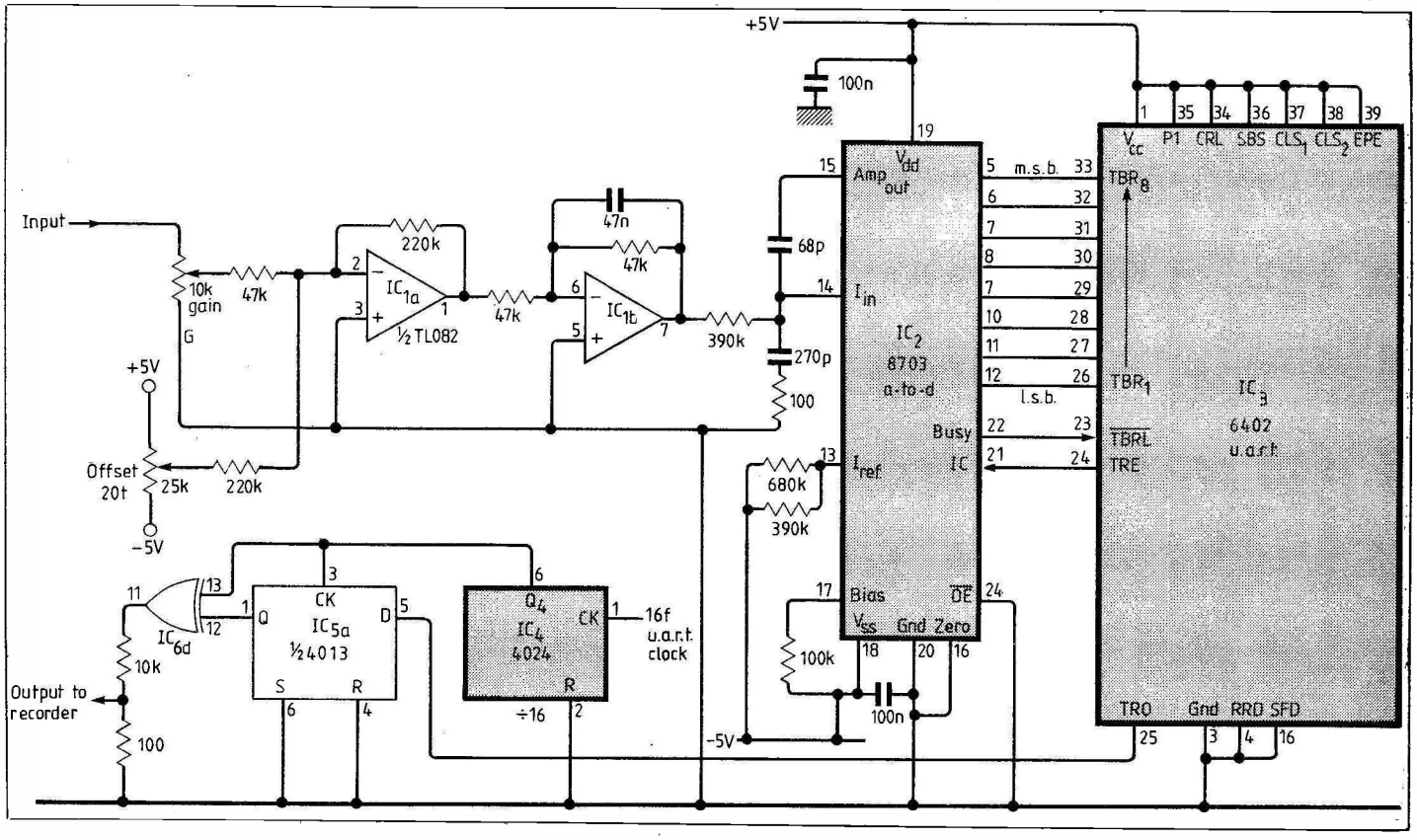

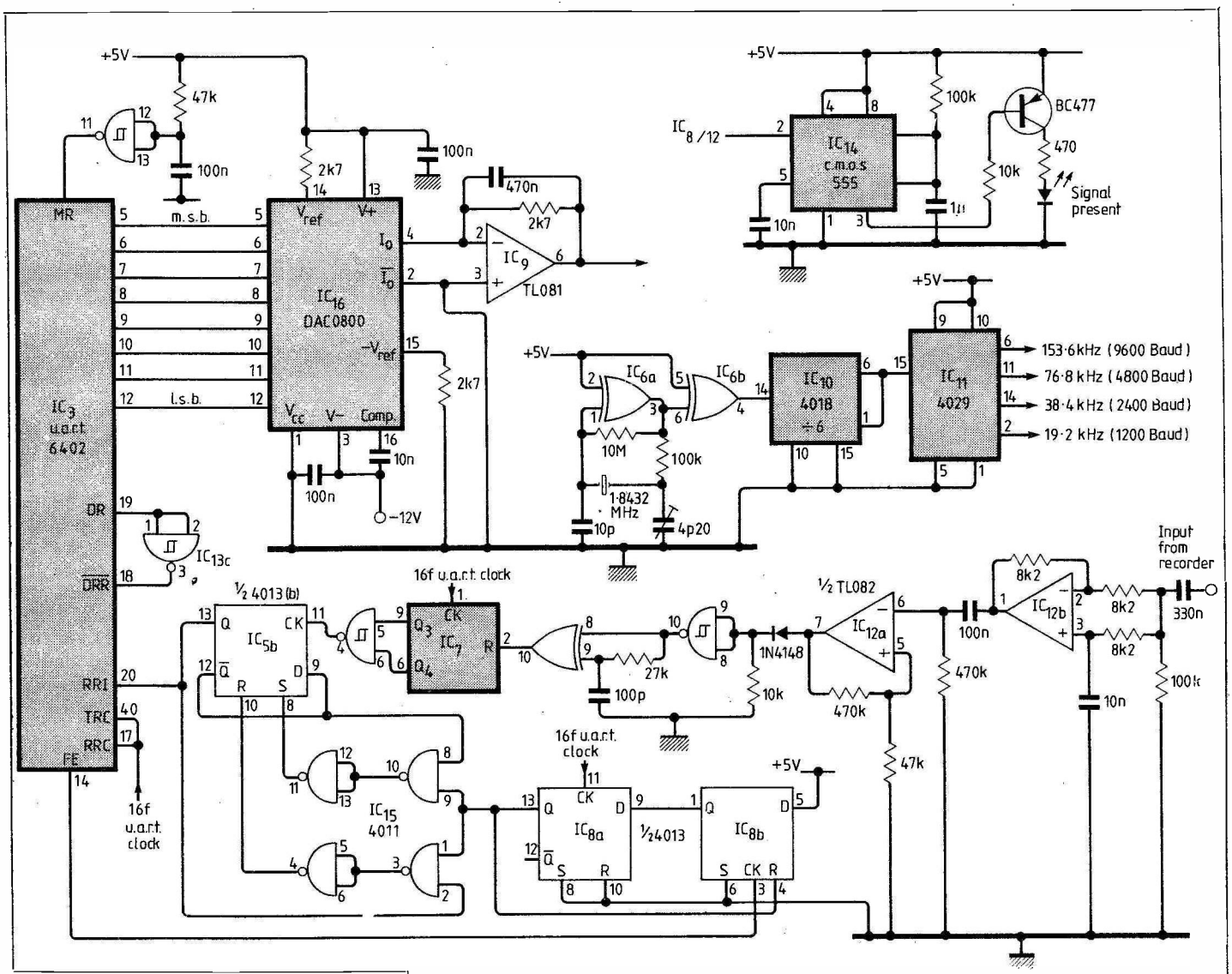

ping are provided by IC_{12a} and IC_{13c}, decoding by IC_{6b}, IC_7 and IC_{13b}. The phase-encoded signal is first passed through slicer IC_{6b} to provide a short pulse at each transition of the signal. Counter IC_7 is clocked by the 16f uart clock and output counts 12 to 15 are decoded by gate IC_{13b} to give a logic low, except if the counter is reset by a pulse from IC_{6b}. When the resulting waveform is divided by two the true data stream is recovered. The decoding process is illustrated by waveforms. The data received (DR) flag of the uart is used to reset itself via data received reset (DRR) and the output data is fed directly to d-a convertor IC_{16} and low-pass filtered at output amplifier IC_9.

If the input data stream is inverted the uart will generate frame error (FE) pulses. These are used to invert the phase of the data by setting or resetting flip-flop IC_{5b} accordingly, via IC_{15} and IC_8. Upon tape replay start-up or after a stop-bit error, the first few bytes of data are erroneous but the uart rapidly synchronizes, indicated by illumination of the led.

The circuit is simple and reliable and a very low bit error rate can be achieved with errors appearing as short gliches on the analogue output. If the record section is used separately it draws only 7mA making it suitable for use in battery powered equipment.

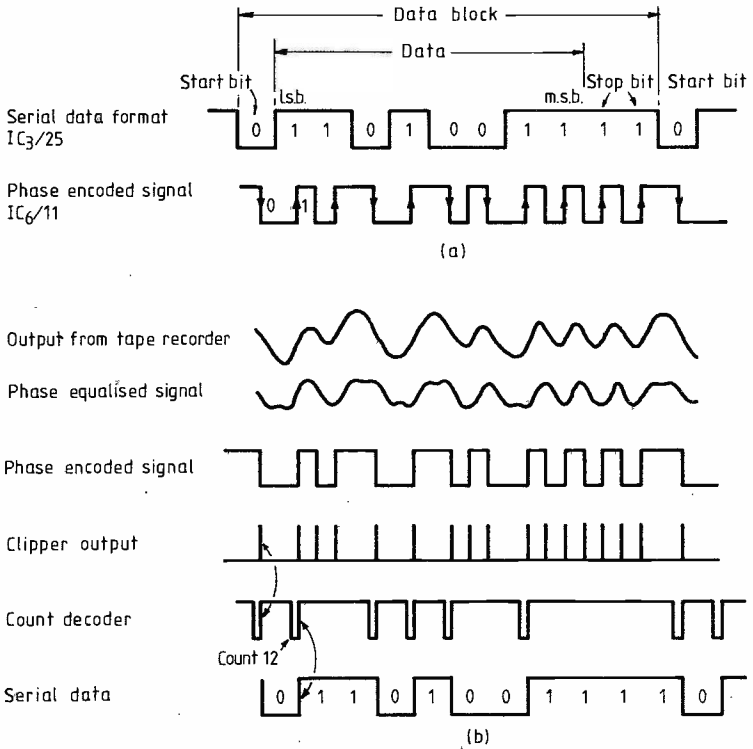

Eight-bits from the a-d converter are recorded using one start and two stop bits with a sampling rate of 430Hz. Phase encoding technique records bits as upward or downward transitions (a). In decoding the clipped signal, counts 12 to 15 are decoded by gate IC_{13b} to give a low signal, except when converter is reset by pulse from IC_{6b}.

Stepper motor drive circuit

Simple and reliable cost-effective alternative for stepper motor drive circuitry offers significant increase in efficiency.

by Adrian D. Bailey

Properly used, the d.c. stepper motor offers a means of accurate positioning, very often without the need for feedback. Unfortunately, the driving circuitry can be inefficient or costly, tending to make the stepper an unattractive proposition. This proposal suggests an alternative cost-effective drive circuit that is simple, reliable and offers a significant increase in efficiency.

A stepper motor normally consists of a permanent magnet rotor within a system of electromagnets forming the stator. The stator windings, usually four, are energized in an electronically generated sequence to create a rotating magnetic field which the rotor follows. The main difficulty is the means of switching the currents in the windings, and the performance of the motor is very much affected by the drive system used.

The simplest system is the resistance-limited (r/l) drive, the essentials of which are illustrated in Fig. 1. The electrical time constant of the circuit is reduced by adding resistance in series with the motor winding and the supply voltage increased to restore the static current in the coil. This is a simple and readily constructed circuit commonly used to drive smaller motors. This drive is inefficient because the supply voltage is far larger than the voltage required across the motor coil to establish the rated current. The balance appears across the resistor, and causes power to be dissipated in the form of heat. With even quite small motors this results in large dissipators or fan cooling.

Methods for improving circuit efficiency include:

- Bi-level voltage drive – in which a low voltage, low resistance circuit maintains the current in a coil, and a high voltage, high resistance circuit is activated when currents are switched on or off.
- Chopper drive – in which the resistor is wholly or partly replaced by another transistor which is switched at a high frequency with a variable mark-space.

Each of these requires additional circuitry and is therefore costly to design and implement; furthermore both use a high voltage supply and some kind of switching to limit the current.

Adrian Bailey is technical tutor at the Centre for Industrial Studies within the department of engineering production, Loughborough University of Technology.

The proposed circuit does not use either a high voltage supply or a switching system. A transistor operates as a linear device in a constant-current configuration, and so one could name this the linear constant-current (l.c.c.) drive. To reduce the losses the supply voltage is kept low. The resistance of the circuit is also reduced – not merely to the value required to limit the current, but to an absolute minimum – and the transistor takes over the current limiting function, Fig. 2.

The graphs of Fig. 3 indicate the action. Curve A is for a typical resistance-limited drive. For curve B both the voltage and resistance have been halved. Notice that although the end current will be the same the curves clearly indicate the reduction of speed of the circuit. For curve C, the voltage is still halved, but resistance is minimal. The curve is in two sections. At first the current rises expotentially, after which the constant-current configuration takes effect and the curve runs parallel to the time axis. Note that at very low speeds, and at stand-still, the motor current is unchanged; as a result the torque is unchanged. At modest speeds the l.c.c. drive (curve C) establishes slightly more current than the resistance drive (curve A). Whether or not this yields more torque depends upon the precise mechanical characteristics and also on secondary electrical parameters which cause the time/current curve to differ from this simple theoretical one. At high speeds the l.c.c. drive is poorer than the resistance drive and causes a reduced torque above a certain critical speed.

So far, only the problems arising when the drive transistor turns on have been considered. The conditions at switch-off are just as crucial. In the resistance circuit, the voltage at the collector rises when the transistor turns off as a result of the magnetic field collapsing. Eventually, the diode becomes forward biased and current flows in the coil, resistor diode circuit. The time constant is similar to that of the charging circuit.

The l.c.c. drive presents a slightly different problem at discharge. There is no resistor to include such a discharge loop, and to ensure adequate discharge in the time available the e.m.f. in the discharge circuit must be allowed to rise. One way of achieving this is with a zener diode as shown in Fig. 2. Calculating the minimum required zener diode voltage rating is a little tricky. If one assumes an exponential decay of current, then one must answer the question: How little current approximates to zero? Energy considerations necessitate estimation of how the dissipation is shared between the resistance of the motor coil and the zener diode. Formulae given later are derived from energy considerations, in a manner guaranteed to build a safety margin into the design. The zener voltage calculation assumes all the dissipation to be in the diode. In practice, the zener voltage should be as high as possible without exceeding the transistor voltage ratings, and at least twice the supply voltage.

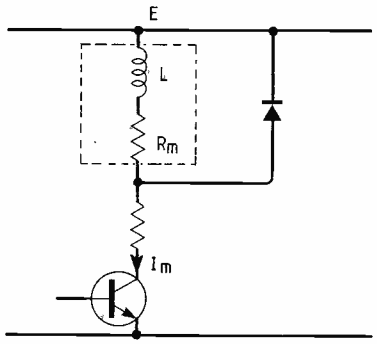

Fig. 1. Common drive circuit is inefficient because supply voltage is greater than that required across motor coil.

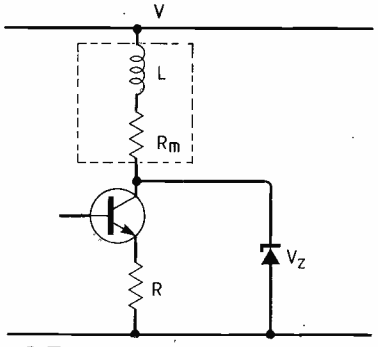

Fig. 2. To avoid use of high voltage or chopper drives to increase efficiency, this transistor operates in constant-current mode with circuit resistance reduced to a minimum. Zener diode allows discharge circuit e.m.f. to rise.

A further difference between the two drives concerns the circuitry preceding the transistors in Figs 1 & 2. In resistance-limited circuits the base should be current driven i.e. simply switched.

But in l.c.c. circuits, the base must be voltage driven.

Design procedure

1. Study the performance curves for the chosen motor and select the speed above which a reduction of torque can be tolerated. If a machine is already operating with a resistance-driven stepper motor drive, simply take the maximum speed of operation. Either way, call this speed S steps per second.
2. Calculate the current which the resistance drive establishes in one step period at this speed.

$$I = I_m\left[1-\exp\left(-\frac{E}{LSI_m}\right)\right]$$

where I_m is the rated current of one winding of the motor (A), L the inductance of one winding (H), and E = R/L drive supply voltage (V).

3. Design l.c.c. output stage and establish the value of the emitter resistor, R. This should be as small as possible consistent with the reliable operation of the l.c.c. stage; usually 0.6V drop at I_m will be about right.
4. Calculate the supply voltage, V, that the l.c.c. circuit requires to establish the same current as found in step 2 above, at the same speed, S.

$$V = I(R+R_m)/\left(1-\exp-\frac{R+R_m}{SL}\right)+V_{sat}$$

where R_m is the resistance of one of the motor coils (ohms), V_{sat} the saturation voltage of the transistor.

5. Calculate the zener diode voltage and power rating.

$$V_z = \left(I_m R_m/\exp-\frac{R_m}{LS}\right)+V$$

$$P_z = LI^2{}_m S/2K$$

where k = 4 for the full-step sequence, 8 for the half-step sequence.

Practical circuit

Fig. 5 is the circuit diagram of an l.c.c. drive system used in experiments to verify the theory. A reversible binary counter IC_1 has separate up/down clock inputs, and its output decoded by IC_2 a binary to 1-of-8 decoder, and the normal half-step sequence is constructed by four nand gates in IC 3 & 4. When the open collector output of the nand gates is off (logic high) current flows through R_1 to Tr_2 output stage base. This turns on, and when the voltage across R_2 reaches around 0.6V Tr_1 turns on, removing some of the bias current from the base circuit. This results in Tr_2 running at constant current, the value being determined by R_2 and the V_{be} of Tr_1. When the output of the nand gate is on (logic low), the output stage is held off.

Components

Transistor Tr_2 should be a Darlington type because a single transistor may not be fully turned off by the nand gate. For the same reason, R_1 should not be much reduced in search of larger bias currents, as the output voltage of the nand gate will then rise. As the l.c.c. circuit causes the transistor Tr_2 to dissipate most of the losses, it should be thoroughly heatsunk. The value and power rating of R_2 is simply calculated by the fact that 0.6V is established across it in the limiting condition. Transistor Tr_1 can be any small silicon type such as BC182.

The remaining integrated circuit IC_5 is used for simple handshaking, and is optional. Whenever a current is switched, this monostable gives a pulse. The motors should be stopped again until the monostable settles. Components R_4 and C_1 determine the duration of the pulse and should be selected to suit the application.

Adrian Bailey was educated at Neath Boys' Grammar School, and at Loughborough University of Technology and gained a third-class honours degree in electronic and electrical engineering in 1973. After two years with Decca Radio and Television designing consumer hi-fi equipment, he returned to the University to work at Loughborough Consultants Limited, a company involved with the custom design and manufacture of many types of electronic equipment for industry, particularly measurement and control. In the summer of 1981 he was made redundant, but later found a job as technical tutor at the Centre for Industrial Studies in the Department of Engineering Production, Loughborough University, teaching the more practical aspects of computer-aided control, including machine-code programming and interface design.

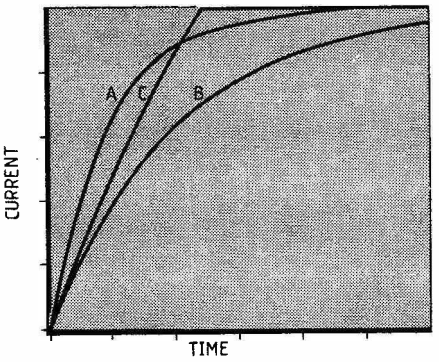

Fig. 3. Action is illustrated by curves at A for typical resistance-limited drive, with B for halving of both resistance and voltage, clearly showing speed reduction. First part of C for l.c.c. drive is exponential, after which constant-current mode takes over.

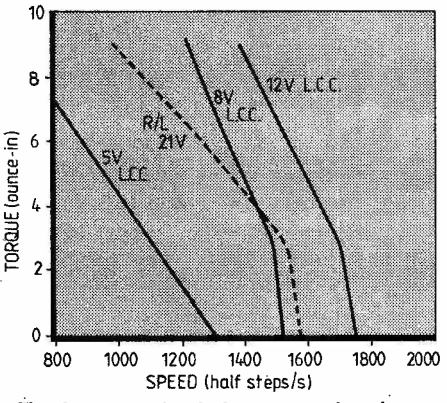

Fig. 4. Broken line is for conventional resistance drive, while solid lines refer to l.c.c. circuit with varying supply voltage.

The circuit is driven as follows:

Initially, $\overline{UP}$ and $\overline{DOWN}$ signals are both high, and ON is low. In this state, all the output stages are off and the motors exhibit negligible torque.

ON is taken high. $\overline{BUSY}$ will go low for a while. When it rises, move onto the next stage.

Take either $\overline{UP}$ or $\overline{DOWN}$ signals low briefly, leaving the unused input high. On the rising edge of this pulse $\overline{BUSY}$ goes low, and the motor starts its turn. When the BUSY signal returns to logic high this stage must be repeated.

Alternatively, take ON low, to enter the power-saving condition.

On each pulse to $\overline{UP}$ or $\overline{DOWN}$ the motor will turn one half-step either clockwise or anticlockwise depending on which of the inputs is driven.

If you prefer, a similar circuit could be devised using a 74LS191 for IC_1. This has a single clock input and a direction control rather than two clock inputs. Minor alterations to the optional handshaking circuit will be necessary.

Experiments

A simple experiment was devised to evaluate the l.c.c. drive in competition with the resistance drive. The motor was Sigma type, number 20-2220-D200-F5.1. This has a coil resistance of 5.1Ω, an inductance of 8mH, and rated current of 0.9A. The mechanical load consisted of

Fig. 5 is the linear constant-current drive used to experimentally verify the theory, see Fig. 4 result.

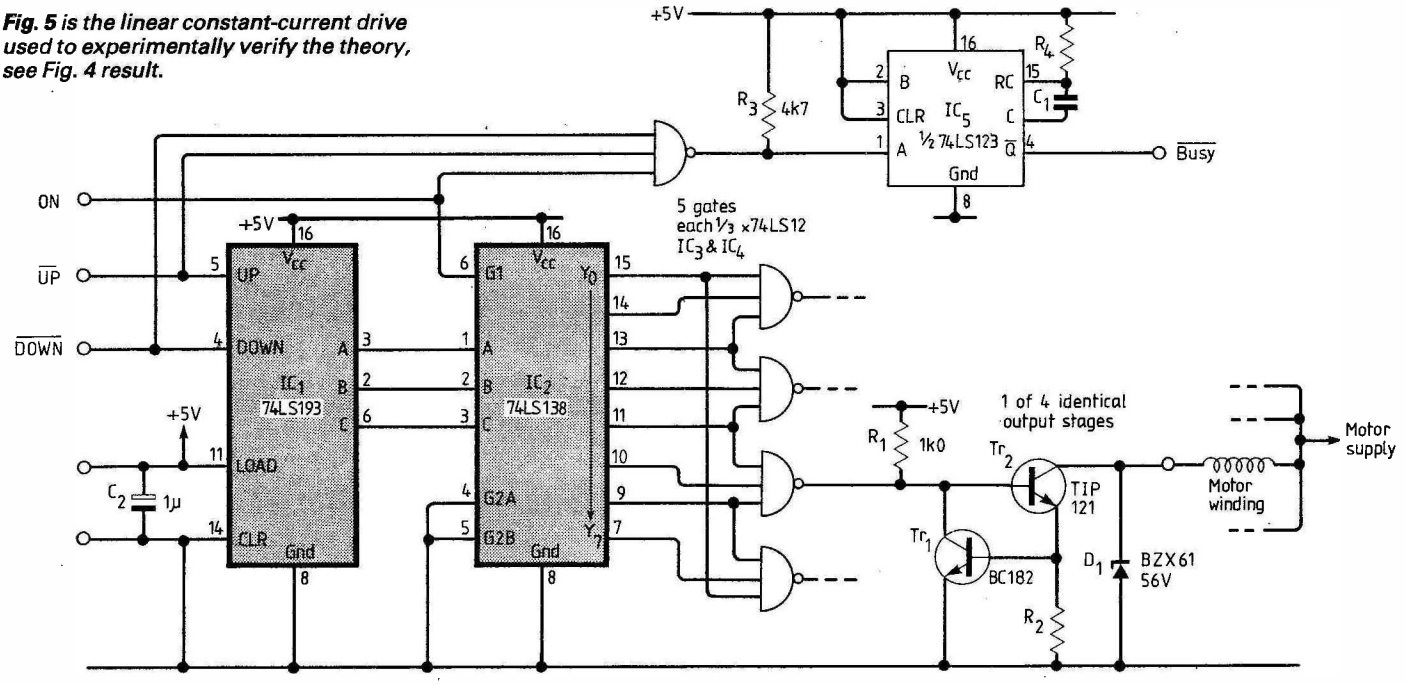

weights on a string, the free end of which wrapped around the motor spindle. The speed at which the motor could deliver this torque was determined simply by reducing the drive frequency until the motor turned smoothly and winched up the weights. Although crude, the method was effective, giving good repeatability.

First, a conventional half-step resistance drive was evaluated with a supply of 21V and a phase current of 785mA. The broken line in Fig. 4 shows the resulting torque-speed curve. Then the l.c.c. circuit was substituted and the phase current set to 820mA. The remaining curves on Fig. 4 show the effect of varying the supply voltage. Design procedure suggested that a supply of 8.5V would give equivalence at 1000 half-steps per second. The experiment confirms this and shows a generous safety margin, arising partly from the use of 56V zeners rather than the calculated 18V, and partly from the slightly larger phase current.

The resistance drive required a 33VA supply of which 27.6W were losses; the l.c.c. drive with an 8V supply consumed 13VA of which 6.3W were losses, and in this case the mechanical output was slightly improved.

Further work. It should be a fairly straightforward exercise to apply similar ideas to a bipolar drive, although special attention to the discharge arrangements may be necessary.

Continued from page 69

is legitimate in principle because although probability is a non-physical or metaphysical quantity, so also is the quantum-mechanical ψ. But to attribute physical properties to Schrödinger's ψ is to indulge in mysticism. There is no physical mechanism in the quantum mechanics, and nobody has the slightest idea why it gives acceptable answers.

As in the case of electromagnetic theory therefore, only more so, the statistical quantum mechanics must be regarded as an analogy, in some way reflecting or paraphrasing the behaviour of the true "operators" – physical factors – which give rise to real microphysical effects. The mathematical technique by which it chooses to perform its calculations is an esoteric matter of very limited external interest: the mechanism of the switching of transistors inside a computer during a calculation in ballistics does not reflect the law of gravitation. On the other hand the computer program does, and algorithms incorporated in the program may often be interpreted to provide us with useful hints – but not always!

Both the philosophical nature and the limitations of the quantum mechanics are apparent in the following tale, which is apt in depth. When we speak of a "suicide wave" hitting London we mean that there is an increased probability per Londoner of suicide this week. By associating this probability with the greek symbol ψ we could quantify ψ ; by noting what happened last month in New York we could even say the ψ had "propagated" from Wall Street to the City. We would then have described the phenomenon, *and by repeated ad-hoc adjustments of the "theory" in the light of empirical experience* we would in due course become able to predict it – provided, of course, that it was determinate. But no economist or sociologist would be content to rest upon such an intermediate achievement but would seek its underlying cause. Certainly a non-physical quantity (information) did cross the Atlantic, but being non-physical it pulled no triggers itself and in any case it is not ψ. This probability – ψ is not the cause of the suisides nor even a description of their cause: it is merely a description of the observed affect. Further, ψ does not tell us *who* is to take his own life this week, which might be thought relevant to a full understanding of the process.

In a precisely analogous way the quantum mechanics tells us, statistically, empirically and also very accurately, where electrons are likely to be found in the future, on the basis of what we know *now*, statistically, of where they are and how they are moving; but we must always remember that its "probability function" doesn't tell the electrons where they are to go. That must be contolled by physical forces in compliance with the conservation laws.

Thus the wave theory of matter, which asserted that its non-physical "waves" could exert physical control over particle motion, had been well and truly disproved by the year 1930; but then the most unexpected and amazing thing happened. Instead of being rejected as wrong, as it should have been, the matter-waves concept was retained and kept alive as a kind of philosophical toy or pet. It was such a *pretty* idea! I do not know exactly why it was retained or by whom, although I have my suspicions. However, no precautions were taken to keep the disproved wave theory separate and to distinguish it from the workable and justifiable quantum mechanics, so that confusion between the two was allowed to develop unhindered. A typical example of this confusion today is the common belief that matter-waves exist, and that they are waves of probability. They don't, and they aren't.

That confusion may even have been encouraged in some quarters. It fostered lines of thought which were not much trammelled by the tiresome *discipline* of physics, and it was therefore in line with the general temper of the immediately post-war decades. But in the afterlight, from the point of view of the philosphy of science, the wave theory of matter was to prove a dangerous toy for physics to have kept and played with. In my next article I review some examples of the theoretical and conceptual havoc it has left behind it: damage which has remained unrepaired up to the present day.

Modular preamplifier

This final part completes the description of the noise-breaker module and shows the signal-level meter. The first three were published in October and November 1982 and January 1983 issues.

By J. L. Linsley Hood

While some additional discrimination in favour of the spurious pulses mentioned in the last article can be obtained by reducing the time constants in the pulse detection channel (C_{65-66}, 220nF, $R_{109-110}$ 2k2, C_{67-68} 1nF, $R_{112-114}$ 47k), the difficulty still persists that many of these quite audible clicks and pops are, in reality, of very low amplitude in relative signal terms, and I do not think that they can successfully be excised without other, wanted, signals also being impaired.

My conclusion, therefore, remains that while it is possible to design a circuit which will make scratched discs less disconcerting to listen to, it is not possible to design an electronic substitute for care in record cleaning. However, for what it is worth, a dusty record sounds much better when played by a cartridge tracking at some 2g weight, than it does when played by one with a 1g stylus weight.

In the preamble to this series, it was said that all the modules not required to amplify, were, with one exception, unity-gain non-inverting stages. This exception is the noise blanker. My reason for this exclusion is that there has been some debate, in hi-fi circles, about whether the phase of the audio signal delivered to the loudspeakers is audibly important – that is to say, whether the sound is different if the l.s. cone is sucking when it should be blowing, and vice-versa. Without joining this debate, it occurred to me that a low-distortion phase-reversal circuit might be useful. The n-b module fits this bill very well if it is operated at zero 'threshold' setting, when it is simply a low-distortion, unity-gain phase inverter.

To get the widest noise bandwidth, this stage is inserted immediately following the input-signal mixer stage, although, if it is to be used exclusively on gramophone records it could well be interposed between the RIAA module and the PU input to the mixer.

Signal level metering circuit

The circuit for this is exceedingly simple, and is shown in Fig. 23, in which the two halves of the dual op-amp will cope with the two channels, and four small-signal diodes make an adequate bridge rectifier for each meter. The meters used were a pair of inexpensive 'cassette recorder' types, having an approximate sensitivity of 100μA, and were mounted centrally on the preamp front panel. Such a signal level indicating meter is very helpful in setting up the input channel sensitivities so that 1 volt r.m.s. at 1kHz corresponds to the peak indicated level delivered to the volume control potentiometer 'live' end, to which the metering circuit is connected.

The circuit is also useful when using the microphone input, to ensure placing of the microphones so that this sort of peak level is not greatly exceeded, while maintaining an adequate average value. The operation of the preamp. with a signal line at 0V d.c. avoids the normal nuisance of the meters swinging to full scale on switch-on, as C_{72} charges.

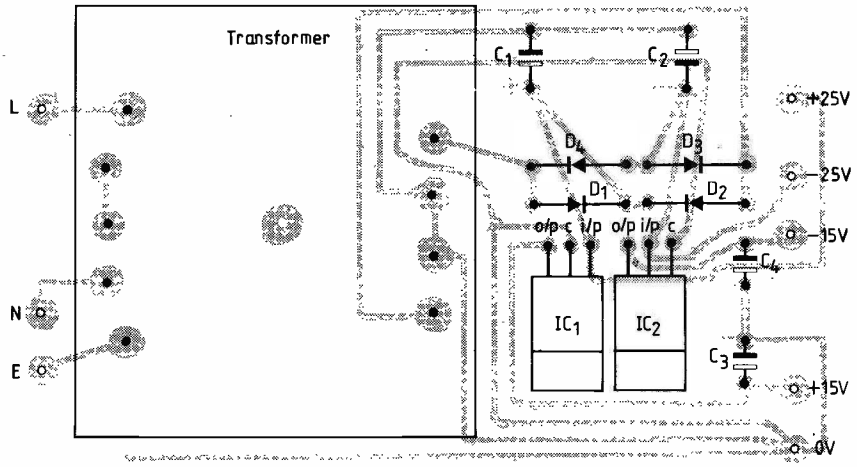

Fig. 26. Printed-board layout for the power supply circuit, shown in Fig. 2 of the October article.

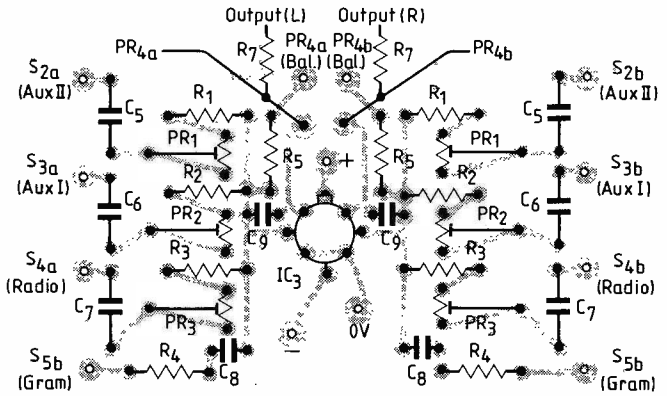

Fig. 27. Mixer stage board circuit shown in Fig. 3 of the October article.

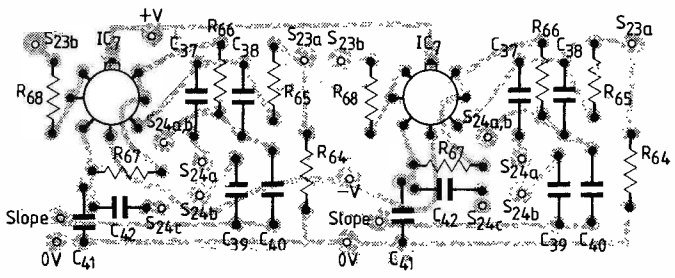

Fig. 29. Treble filter layout. Circuit diagram is Fig. 13 in November article.

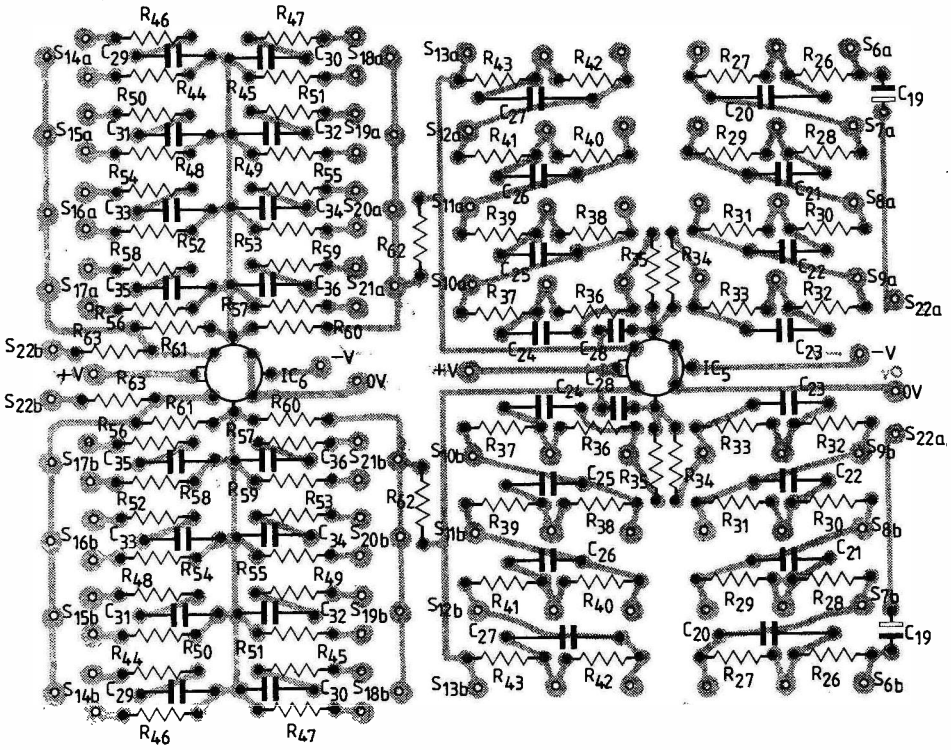

Fig. 28. Board for the tone control, the circuit of which is shown in Fig. 12 of the November article.

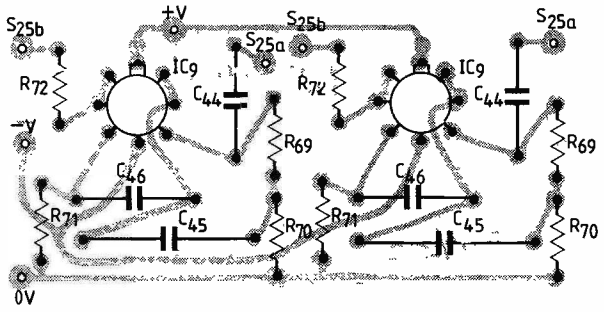

Fig. 30. Layout of rumble filter module, shown in Fig. 14 of the November article.

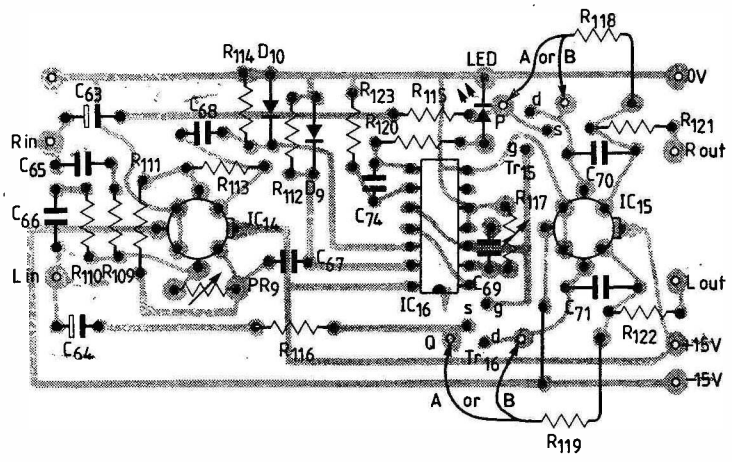

Fig. 34. Board layout for the noise-breaker circuit shown in January, Fig. 22.

Constructional points

Although the i.c. voltage regulators used in the power supply module (Fig. 2) have a very low output impedance, it is obviously desirable that there shall be no inter-module coupling via the V_{cc} lines. In the prototype, this was accomplished by mounting three stand-off insulators in some fairly central position within the preamp. chassis, between which I hung an additional pair of 100μF/16V electrolytics in the manner shown in my sketch (Fig. 24). These three points were then connected directly to the power supply p.c.b., and used as distribution points from which connexions were taken to the 0, −15 and +15 volt points on the several preamp. modules. An additional 0V line was taken to the chassis earthing point at the microphone input phono sockets.

Inevitably, the question of earth layout presents some problems, especially if individual phono sockets are employed, since

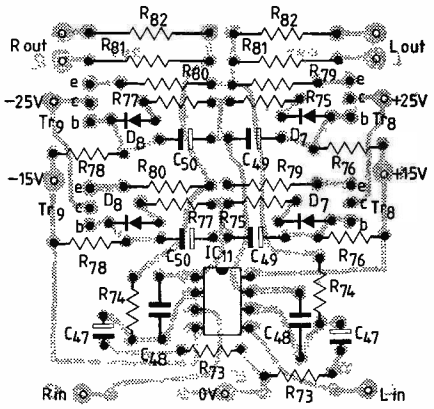

Fig. 31. Board layout for the headphone amplifier – Fig. 15 in November's article.

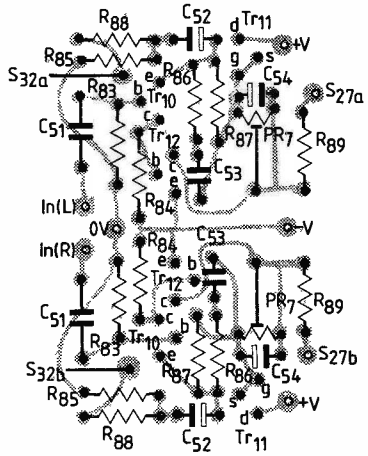

Fig. 32. Microphone amplifier board – Fig. 17 in the January article.

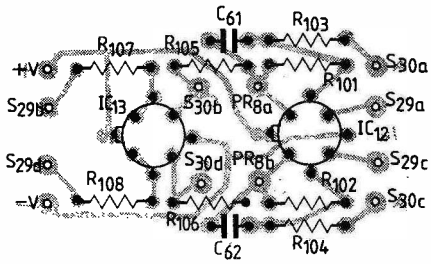

Fig. 33. Layout for the image-width module, Fig. 21 (January).

these generally earth direct to chassis. In the case of the prototype, where both DIN and phono sockets were provided, wired in parallel, the PU input sockets were insulated from the chassis, and connected only by the outer braid of the screened cable to the 0V points on the m.c. pickup head amp. p.c. board, and from there to the 0V point on the RIAA board. The larger signal level 'Radio' and 'Aux' inputs were merely earthed via the chassis, in the expectation that the hum signal picked up through this route would be negligible in relation to the 300mV or so of input signal, and this has proved to be the case.

An additional switch, shown in Fig. 1, was placed alongside the output sockets feeding the power amp. This allows a L-R reversal of channels, to avoid the inconvenience of unplugging the l.s. leads if it is found (for example, on borrowing a

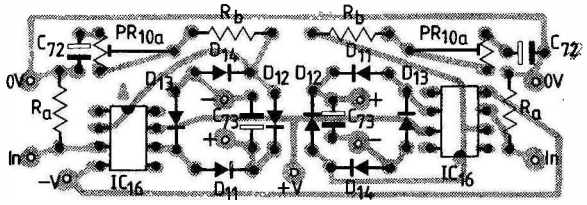

Fig. 35. Layout of board for Fig. 23 in the January article – the signal-level meter.

friends p.u. cartridge) that the L-R channel location is incorrect. I have also used a spare series of mechanically interlocked push-button switches below the input sockets, to allow the 'Aux 2' DIN socket to be used as a switched output from any of the other inputs, or the RIAA p.c.b. output, to permit the preamp. to be used on two tasks simultaneously so that, perhaps, one programme input can be routed to l.s. while another is routed to tape. The wiring of this is shown in Fig. 25.

Although the design and construction of this preamplifier took quite a time, because it was possible to build and test the individual modules, separately, prior to their installation in the preamp. box, the final assembly was straightforward and trouble free. However, I would urge that the unit be tested, where possible, after each module has been wired in, so that if any unexpected effects are found, their location will be certain. I would, myself, be very unhappy about putting together anything as complex as this and then only testing it to see if it all worked after it was complete.

As a final check on the prototype, to assure myself that there was little signal degradation, the overall t.h.d. at 1kHz and 1 volt r.m.s. output, with all the modules in circuit, and with inputs to RIAA input, or mic. input, or to any of the auxiliary inputs, was measured as less than 0.10%. The only sensible comment on the sound quality of the system is that it is determined by the input programme material, which, of course, is how it should be.

Microcomputer interfacing

from page 52

Digital-analogue conversion

Unlike the a-d converter, the d-a device does not require any hand-shaking; the conversion time of 1μs is well within the time of execution of any operating software. Fig. 4 shows how a single channel of output is connected to the governing 6522. In principle, it is very similar to the input stage where port A transmits the data although it is now defined as an output, while port B provided the necessary chip-select signals for all four output channels. Again the problem of transferring twelve-bit data over an eight-bit bus is handled by the control lines $\overline{WR1}$, $\overline{WR2}$, BYTE1/$\overline{BYTE2}$, $\overline{CS}$ and $\overline{XFER}$. It is possible to operate the converter in several modes, so a detailed description of these control lines is not given here – reference 3 does this more than adequately. For the circuit shown in Fig. 4, however, the $\overline{CS}$ line references which of the four channels is to be loaded with the data on the bus, while the two-byte transfer is managed using the $\overline{WR}$ and BYTE1/$\overline{BYTE2}$ lines. The digital data is stored in two internal latches and is only transferred to the converter section of the chip when $\overline{XFER}$ and $\overline{CS}$ are low. This enables all channels to be loaded with data in succession followed by simultaneous conversion and latching.

The converter produces a current proportional to the digital input code and this is converted to an output voltage by using an LF356N operational amplifier. The circuit shown in Fig. 4 has a 20kΩ potentiometer for zero adjustment and a 50Ω trimmer for setting the full scale adjustment. As the d-a converter can be considered as a digitally controlled attenuator followed by an inverting amplifier, the relationship between the output voltage V_{out}, reference voltage and digital code D is:

$$V_{OUT} = \frac{-D \times V_{REF}}{4096}.$$

In practice the reference voltage is derived from a 4.7V precision zener followed by a precision potentiometer.

Morris Driels graduated in 1969 from Surrey University with a B.Sc in Mechanical Engineering and from City University London with a Ph.D in 1973. Apart from a year spent working in the aerospace industry he has been a lecturer in the Mechanical Engineering Department at Edinburgh University. Recent involvement with microelectronics and computers reflects the current need for graduate engineers to have some experience in microcomputer interfacing, data acquisition and control.

Two short demonstration programs have been written to illustrate the more elementary capabilities of the data acquisition system and copies are available (see tail-piece). The system was connected to a CBM 4032 microcomputer and the v.i.as configured to occupy the memory range $8800 – $882F. The first of these programs deals with data input, is purely machine code and resides in the second cassette buffer $033A – $03FF. In operation, the a-d converter inspects each of the eight channels, converts the data and displays the resulting twelve bit code (0-4095) on the screen. After displaying all eight channels a blank line is printed. Because it's difficult to interrupt a machine code program without losing the data, 16 lines of output are are displayed before the program halts. By applying a variable voltage in the range 0 to 2 × V_{REF} to the different input channels, the corresponding twelve-bit code should appear at the appropriate place on the display. Both Basic and machine code are used for the d-a converter program which is designed to operate on channel zero *only*. By typing in the chosen twelve-bit code (0-4095) when requested, the output pin for channel zero acquires the corresponding analogue voltage.

Availability: A printed circuit board and assembled systems are available from the author at Kings Buildings, Mayfield Road, Edinburgh. Copies of the demonstration programs are obtainable from Wireless World, at room L302, Quadrant House, The Quadrant, Sutton, Surrey, but please mark your envelope "data acquisition".

References

1. Syntertex data sheet, SY6522 and SY6522A Microprocessor Products, 1980.
2. Intersil data sheet, ICL7109 12-bit binary a/d converter for microprocessor interfaces, 1979.
3. National Semiconductor, Linear Data Book, 1982.

LITERATURE RECEIVED

An assessment of microwave limiter design techniques is a 127-page study carried out by C. Gupa and K. Soh of Microwave Associates on behalf of the European Space Agency. It covers limiters operating over a broad frequency spectrum at various power levels, compares them to establish the most suitable types for specific conditions. Microwave Associates Ltd publish the report at Woodside Estate, Dunstable, Beds LU5 4SX. WW 403

Processing digital signals. TRW manufacture a range of components such as multipliers, accumulators, a-to-d and d-to-a converters and other functions. They are detailed in a catalogue which is available from MCP Electronics Ltd, 38 Rosemount Road, Alperton, Middlesex HA0 4PE. WW 406

NEW PRODUCTS

SCOPE FOR IMPROVEMENT

An updated version of the Hameg 203-3 oscilloscope has a bigger screen (8 × 10cm) with an internal graticule; both vertical amplifiers now have variable controls with an input sensitivity of 2mV/cm. In addition to line and tv triggering, h.f. and d.c. triggering are now possible. The scope has been provided with a component tester for quick checks on semiconductor device and other components. This general-purpose service scope costs £240. Another 20MHz oscilloscope has a high-resolution timebase up to 20ns/cm with sweep delay and magnification. The trigger system may be automatic on peak values up to 50MHz with a variable hold-off time. A Z-modulation input operates at positive t.t.l. level. This multi-function HM204 oscilloscope is priced at £362. Hameg Ltd, 74 Collingdon Street, Luton, Beds LU1 1RX.

WW301

WW301

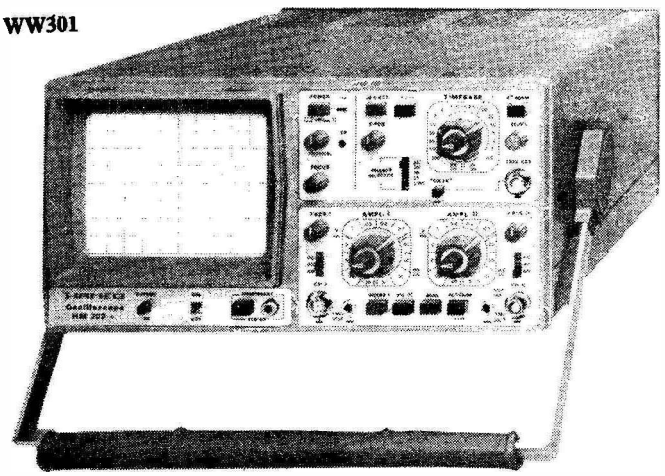

ELECTROLYTICS AS SMALL AS BEADS

Elna RC2 capacitors are manufactured using a multiple etching technique to achieve a maximum height of 8mm with a lead spacing of 5mm which makes them suitable as replacements for the more expensive tantalum bead capacitors. Values are from 100μF to 100mF with voltage ratings from 6.3 to 63V. Standard tolerance is 20%. Charcroft Electronics Ltd, Sturmer, Haverhill, Suffolk CB9 7XR.

WW302

WW302

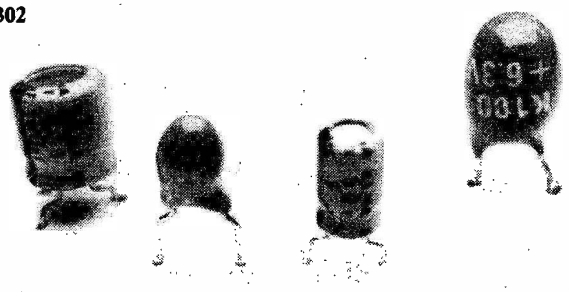

BBC MICRO INTO STORAGE SCOPE

An analogue signal display and analysis system turns a BBC/Acorn model B microcomputer into a storage oscilloscope with two channels for input of frequencies up to "the high audio range". The display can be programmed in time or frequency along the x-axis. A number of screens may be retained in memory and recalled for comparison. Any display can be reproduced on a printer for a permanent record, traces can be superposed by the printer which has been chosen to match the resolution of the computer. Input channels may be triggered automatically and repetitively or externally. Display or total sampling time can be varied from 0.002 to 25s with a minimum sampling time over one display of 20μs. Variable trigger delay may be programmed.

Full channel identification, time and grid-scale identification with peak-to-peak information are provided. Individual sample values may be listed and transferred to the printer. The signal analyser alone costs £263 but is available in a package which includes the BBC model B, a NEC PC8023B-C dot matrix printer, and a black and white monitor v.d.u. all for £1206, the same package but with a colour v.d.u. is £1407 from Geophysical Systems Ltd, 2 North Way, Andover, Hants SP10 5AZ.

WW303

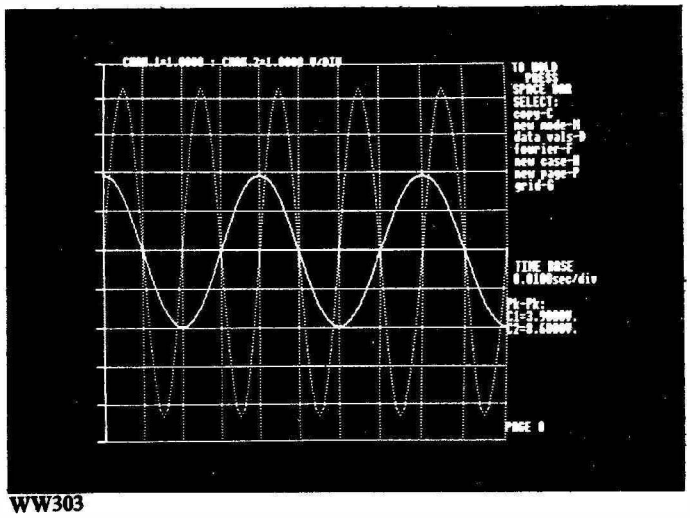

WW303

DIGITAL IMAGE CONVERTER

Two c.c.t.v. systems which can interface with microcomputers have been produced by Digithurst. MicroSight 1 uses a Micro Eye camera interface to send images back to the computer as 8-bit signals. MicroSight 2 uses a charge transfer device camera with a 128 × 128 matrix and the image may be coded as 8-bit digital video or as threshold video. Microsight software consists of a command processor and disc i/o routines, a camera control system and three display routines, which can show facsimile or boundary images. The host computer should have a parallel port and high resolution graphics (BBC, Pet and Apple are quoted as examples). Accuracy of the facsimile image depends on the number of steps available in the grey scale. Both systems may be used for image analysis, boundary tracking, area and "second moment" calculations as part of object recognition. MicroSight 2 has the additional advantage of being a high-speed system and costs £1,990. MicroSight 1 at £499 is aimed at education and research. Digithurst Ltd, Leaden Hill, Orwell, Royston, Herts SG8 5QH.

WW304

WW304

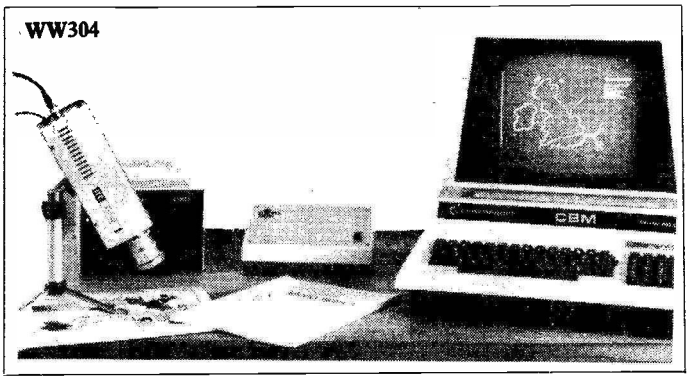

PRINTER IN A RACK

The Syntest SP2000 is an 80-column printer which fits into a standard 480mm rack. The unit is 180mm high and print-out is on 210mm wide single or multi-copy paper. The printer is controlled by its own microprocessor and is eprom-programmed which allows for a degree of flexibility. It can use an RS232C or 20mA current loop interface and has a 1K buffer. Print speed is 100 char./s and there is a selectable data rate input up to 9600b/s. The seven-needle matrix gives a character size that may be

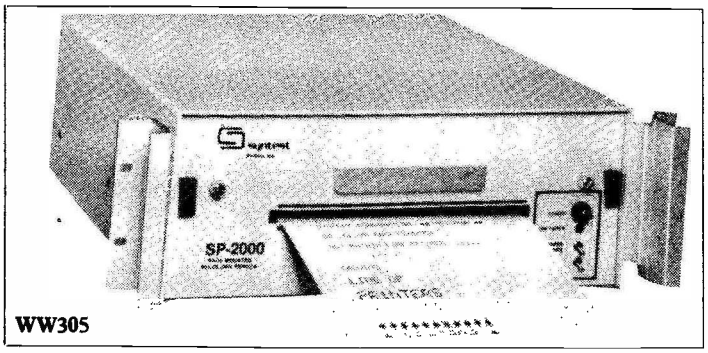

WW305

multiplied in width or height to give large characters. It costs £775 from Russet Instruments Ltd, Unit 1, Nimrod Way, Reading, Berks RG2 OEB.
WW305

SOCKET FOR TO3 POWER

A power-transistor socket, W3438, allows the transistors to be connected or removed without solder. The transistor is held down by two screws which can also be used to clamp a heatsink. The socket is moulded from polyethersulphone and has

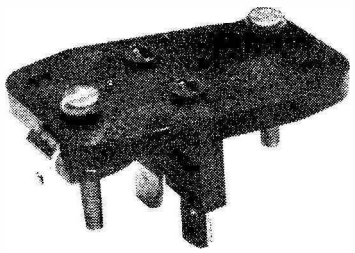

phosphor-bronze contacts plated with tin to give a current rating of 15A. It incorporates solder or spade terminals. Winslow International, 71 Tunnel Road, Tunbridge Wells, Kent TN1 2BX.
WW306

DIAC AND TRIAC COMBINED

Intended for high energy pulse applications, such as strobes, flashers, ignitors, high pressure sodium vapour lighting, pulse generators and fluorescent lighting starters, the Motorola Sidac is a combination of a diac and a triac. It is a bilateral switch which conducts when the voltage across it exceeds a given threshold. Devices in the series are the MKIV-115/MKIV-125 and the MKIV-135 having voltage thresholds of 115 to 125 and 135 for a current of 1A r.m.s. On-state voltage is 1.5V while the holding current 100mA. Future plans include a series for 240V use. Motorola Semiconductors, York House, Empire Way, Wembley, Middlesex HA9 0PR.
WW307

MONOLITHIC CLOCK DECODER

The FP-788 is a single-chip microcomputer programmed to decode the time standard signals from Rugby or similar transmitters, and to display the data in letters and numbers on a dot-matrix display. The integrated circuit provides all the active components required for a complete decoder; signal processing, decoding and display driving interfacing directly to the Epson EA-Y16025AZ liquid crystal display which gives two rows of 16 columns of characters. Days of the week and months are displayed as letters and the display also shows a seconds count not provided by Rugby. The initial issue of the decoder is available; an improved version will include the ability to display other information or to feed the clock information out to, say, a printer. The decoder costs £29.70, the display £37.50 and a p.c.b. and the external components are available to build as a kit. Friday Partnership, 22 Wentworth Close, Rudheath, Northwich, Cheshire CW9 7EE.
WW308

FAULT-FINDING COMPARATIVE TESTER

Suitable for servicing and diagnostic testing of audio, broadcast and other communications equipment, the RV11C voltmeter has a built-in comparator where expected values may be entered so that faults become easy to detect. The meter may be used to monitor and measure voltages, alternating and direct from 300μV to 1kV (and up to 30kV direct voltage with a high voltage probe), resistance down to 0.3Ω, frequency to 1MHz and temperatures from −100° to +800°C. Monitored values and acceptable deviations may be preset. Detected faults trigger an audible alarm which makes the meter useful in factory diagnostics and helps to solve fault-finding problems in difficult environments. The meter, manufactured by Bang & Olufsen, costs £232 and high voltage, temperature and frequency probes are optional extras. It is available in the UK through David Bissett Ltd, 52 Luton Lane, Redbourne, Herts AL3 7PY.
WW309

SWITCHMODE REGULATOR

Replacing costly hybrids, the L296 power switching regulator can supply 4A at a voltage between 5.1 and 40V, selected by external components. Useful for microprocessor applications, the regulator incorporates such features as a 'soft' start, programmable current limiting, remote inhibit and a delayed reset signal. Few external components are needed and as the unit operates efficiently at frequencies up to 200kHz, size and cost of external components is reduced. An internal zener voltage reference eliminates the need for trimmers. Simple crowbar overvoltage protection may be provided by adding an external thyristor. There are internal protections against reverse polarity input voltages, thermal overload and output short circuits. Multiple units may be synchronized easily. Each unit is mounted in a Multiwatt-15 plastic package. SGS-ATES (UK) Ltd, Walton Street, Aylesbury, Bucks.
WW310

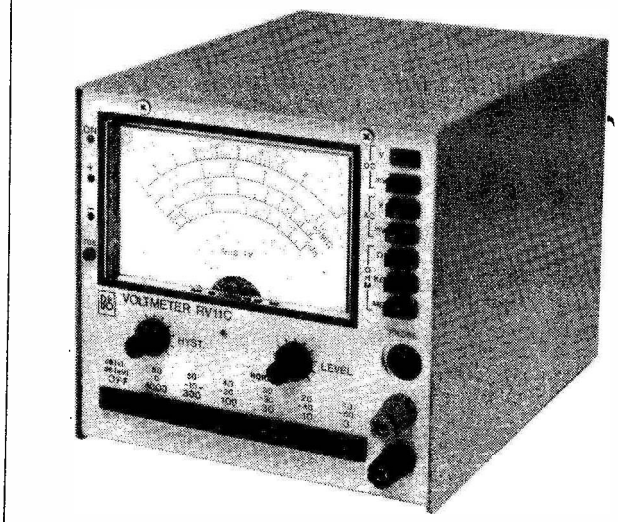

WW309

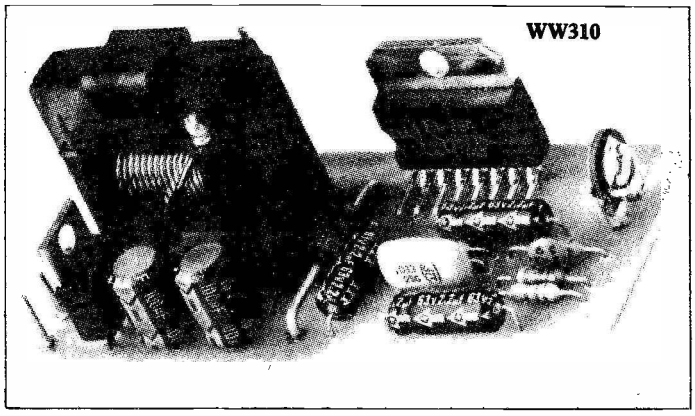

WW310

NEW PRODUCTS

D.C. CONVERTERS

Designed for applications where precise load regulation is not required or where cost is important, the Gemini range of d.c. to d.c. converters can provide

5, 12, 15, ±12 or ±15V from either a 5 or 12V supply. The low-cost range is an addition to the Gemini 900 range and has the same physical size as the rest of the range i.e. 50 × 50 × 10mm. All the power supply units in the range have π input filters to reduce reflected ripple current; the outputs are short circuit protected. Efficiency of the units is claimed to be between 70 and 85%. Gresham Lion Ltd, Gresham House, Twickenham Road, Feltham, Middlesex TW13 6HA.

WW311

MICROCOMPUTER FOR MEASUREMENT AND CONTROL

A computer-aided measurement and control system for process control and factory automation is Macsym 150, a microcomputer based around the Intel 8086 and 8087 16-bit co-processors. With disc drive it operates using the MP/M-86, a multitasking version of CP/M-86 which has a wide library of commercial software for all the usual business applications; word processing, accounts etc. What makes it different is the incorporation of six input/output slots for a variety of interfacing cards. And this is combined with a version of Basic which allows direct input and output to the slots without complicated programming. A command like X=AIN (4,5) means 'read the analogue input at slot 4, channel 5 and store it in memory'. An output action may be taken from an input value such as AOT(4,0)=K*X or 'multiply the input value by a constant and output its analogue value to slot 4, channel 0'. Digital and frequency input and output can be dealt with similarly. Up to 16 digital channels are available or 16 differential or 32 single-ended analogue input channels and 8 analogue output channels or any combination of these, depending on the signal processing cards used.

The Macsym 150 may be augmented by the Macsym 200 a 'front end' with capacity for another 16 slots giving a capability of over 500 channels. High resolution colour display is available with the screen capable of being divided into half or quartered to give different simultaneous displays, including mimic displays for process control. Macsym 150 costs £6,000 with an extra £2,500 for Macsym 200. Analog Devices Ltd, Central Avenue, East Molesey, Surrey KT8 0SN.

WW312

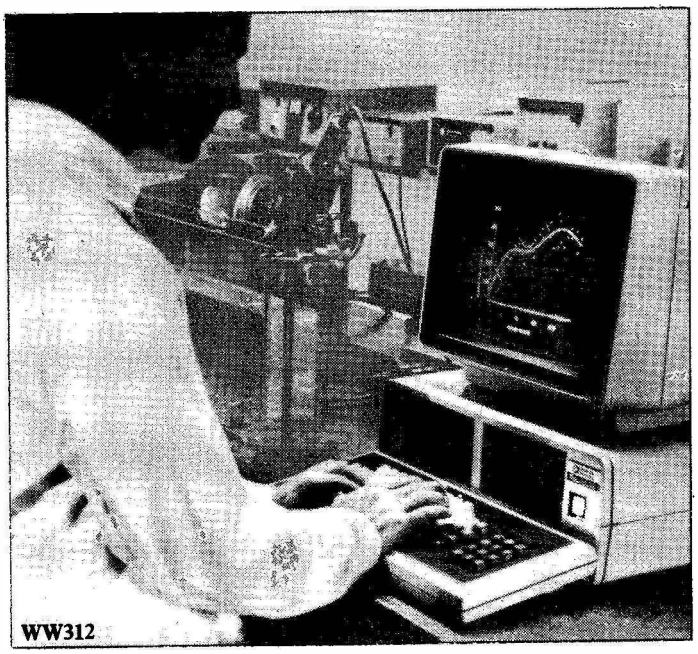

WW312

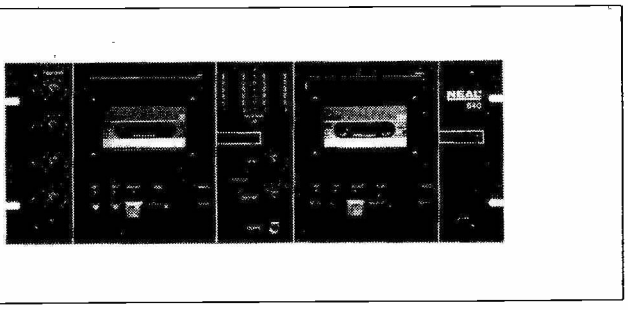

COMMUNICATIONS RECORDER

Lee James Electronics, the manufacturers of NEAL recorders, have announced a range of cassette recorders for use with industrial communications. The units are available in mono, stereo, three- or four-channel configurations for alternate or simultaneous recording, playback or copying. When used as logging recorders in mono at 15/32 in/s, up to 32 hours of continuous recording is possible. Units may be coupled together to give more channels or longer duration. Lee James Electronics Ltd, Unit 21, Royal Industrial Estate, Blackett Street, Jarrow, Tyne and Wear NE32 3HR.

WW313

CP/M ON THE BEEB

The Torch Z80 disc pack includes two 400K disc drives each capable of handling up to 255 files; a Z80 processor card, which incorporates 16K of rom containing the Torch CPN operating system, and 64K of ram – increasing the system's total ram capacity to 96K. The drives may be used with Acorn's disc filing system as well as with the Torch system.

The card is easily installed inside the computer. The 6502 processor handles all peripherals and can read the discs in track-sized pieces, which makes the system faster and more efficient than a single-processor CP/M computer. The CPN operating system runs CP/M programs, but because the operating system and 20K of screen ram reside in the 6502 memory map, nearly 63K of ram is available to the user. CPN also has access to the sound, sythesized speech and high resolution graphics and character displays of the BBC micro. The complete package of twin disc drives, Z80 processor card, CPN card, operating software and manuals costs £780 (+ vat). Torch Computers Ltd, Abberley House, Great Shelford, Cambridge CB2 5LQ.

WW314

Professional readers are invited to request further details on items featured here by entering the appropriate WW reference number(s) on the mauve reply-paid card.

GPIB MONITOR

A low-cost hand held monitor will be of interest to anyone testing or troubleshooting on the IEEE-488 instrumenatation bus. Model 4884 has 16 leds which display the status of the bus signals. These signals may be monitored at the normal bus speed or transactions may be stepped through one at a time. The unit is powered from an internal battery and has a GPIB compatible connector. A simple adaptor may be used to connect to the IEC 625.1 instrumentation bus. WASEC, PO Box 161, Wallington, Surrey SM6 8BA.

WW315

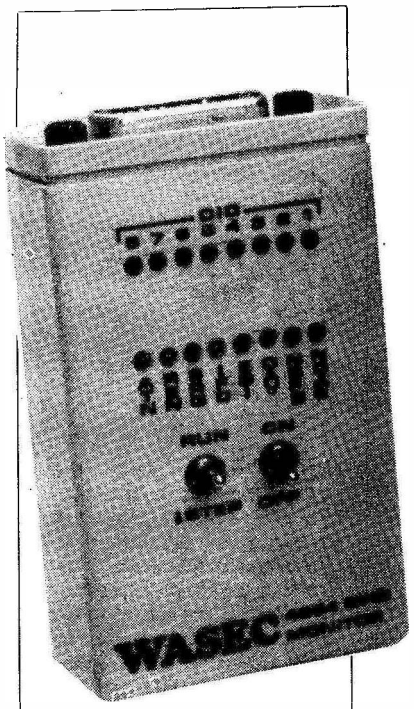

WW315