*A Publication for the Radio Amateur Worldwide*

*Especially Covering VHF, UHF and Microwaves*

# VHF COMMUNICATIONS

Volume No.33 . Autumn . 2001-Q3 . £5.00

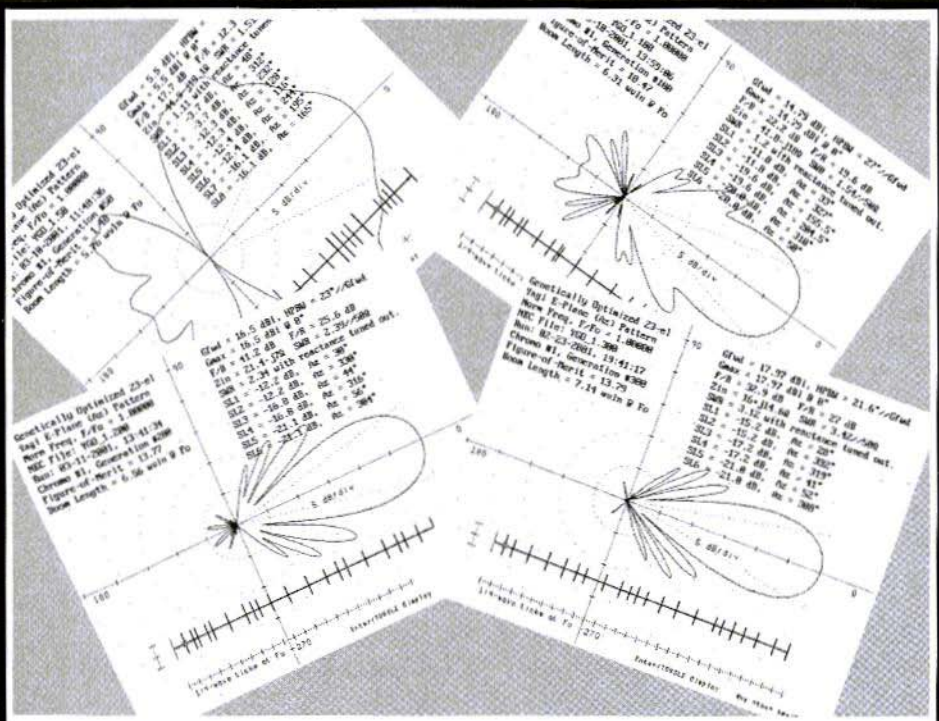

## Designing Long Yagis with YGO3

*Richard A. Formato, Ph.D., WW1RF*

# NEW FROM NOBLE PUBLISHING

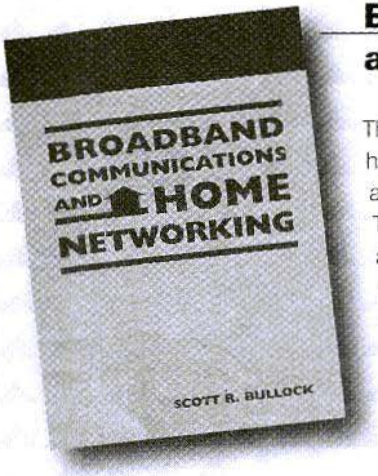


## Broadboad Communications and Home Networking

Scott R. Bullock

This easy-to-read book takes a close look at current high-speed digital communications, data distribution and networking solutions for homes and small offices. The comprehensive review of the basic principles and terminology surrounding telephony, modems, digital modulation and orthogonal signals provides a solid background for more advanced discussions.

2001, 148 pages, ISBN 1-884932-19-3
NP-40. . . . . .$49

## Radio Receiver Design

Kevin McClaning and Tom Vito

This comprehensive and well-written reference presents a systematic discussion of the characteristics of individual receiver components and their interaction in cascade. Written by engineers for engineers, *Radio Receiver Design* focuses on useful and proven concepts that can be used daily by working engineers.

2001, 796 pages, ISBN 1-884932-07-X
NP-35. . . . . .$89

**order today—www.noblepub.com**

Prices do not include shipping costs.

## FOR INFORMATION OR TO ORDER CONTACT:

NOBLE PUBLISHING CORPORATION
630 PINNACLE COURT
NORCROSS, GA 30071
TEL: +1 770-449-6774
FAX: +1 770-448-2839
WWW.NOBLEPUB.COM

NOBLE PUBLISHING

EUROPEAN CUSTOMERS:
PLEASE ORDER THROUGH
AMERICAN TECHNICAL PUBLISHERS
TEL: +44(0)1462 437933
FAX: +44(0)1462 433678
WWW.AMERITECH.CO.UK

# Contents


| | | |
|---|---|---|
| Dipl.-Ing. Henning Christof Weddig, DK5LV | MIMP, Motorolas Impedance Matching Program | 130 - 138 |
| Ricahrd A. Formato, Ph.,D WW1RF | Designing Long Yagis with YGO3 | 139 - 155 |
| Wolfgang Schneider DJ8ES | Digital Speech Store, Instructions and Improvements to the article in issue 2/2001 | 156 - 157 |
| Dipl.-Ing Michael Hein DK5FI | Line Sections As Capacitances Or Inductances In Microwave Range | 159 - 165 |
| Gunthard Kraus DG8GB | An Interesting Program, PCAAD21 - An Antenna Analysis Program | 166 - 175 |
| Matjaz Vidmar S53MV | An Improved BSPK Demodulator For The 1.2Mbit/s Packet Radio RTX | 176 - 188 |
| Gunthard Kraus DG8GB | Internet Treasure Trove | 189 - 190 |


*Lots for designers this time , particularly for antennas. Appologies for the quality of some artwork, there were problems obtaining original material. 73s Andy*

**KM Publications,** 63 Ringwood Road, Luton, LU2 7BG, UK

**Telephone: 01582 581051; INT: +44 1582 581051; FAX: +441582 581051**
**Email: andy@vhfcomm.co.uk**
**WWW: http://www.vhfcomm.co.uk**

*Dipl.-Ing. Henning Christof Weddig, DK5LV*

# MIMP

## Motorolas Impedance Matching Program

**The Smith diagram is an important aid in the design of matching circuits. Mimp software makes it possible to design matching circuits for amplifiers in a relatively simple and clear manner, with the assistance of the electronic form of the Smith diagram.**

## 1. Introduction

For many radio amateurs, the use of the so-called Smith diagram in the design of matching circuits is a closed book. However, it makes it possible to design matching circuits for four-wire networks in a very clear manner, since it gives a graphic representation of the influence which the individual components of the four-wire network have.

If you are designing matching circuits by hand, as well as having the Smith diagram, a pair of compasses, a ruler and a pencil, you will also always have to carry out a few secondary calculations and standardisations / de-standardisations, using a pocket calculator, to obtain the component values for the desired frequency range. The MIMP freeware program (Motorolas Impedance Matching Program) is there for just this application, and can be downloaded, for example, from [1].

With the MIMP program, matching circuits for amplifiers can be designed in a clear manner, with the help of the Smith diagram, without knowing in detail how the Smith diagram works. You merely need to know that the centre point of the Smith diagram is the target point of the transformation curve.

The secondary calculations, standardisations and de-standardisations, and the graphical representation of the transformation curve on the Smith diagram are carried out by the PC. With a few mouse clicks, you can alter component values and track their effect on the matching immediately on the screen.

## 2. Hardware Pre-Conditions

MIMP is a purely DOS program. It was developed in 1990 and does not make any great demands on the PC.

All you need is an IBM-compatible PC, an 80286 processor or better with a VGA graphics card, a 640 kbyte operational memory and a two-button mouse. The program also runs in the DOS

window of Windows 95.

## 3. Installation

The compressed Mimpzip.exe program, which can be downloaded on demand, needs only 120 kB. It should be copied into a sub-directory previously set up by hand and unpacked by running the program, which is self extracting.

The following files are then unpacked:

- Mimp.exe, the executable program
- Devfile.asc, an ASCII file with the names of transistors, the impedance data of which are stored in the file
- devfile.bin
- Helvb.fon, a Microsoft C font.

Then come the batch processing files:

- readme.bat for printing out the text file
- readme.txt, the batch processing file
- printme.bat for printing out the text file
- readme.txt, mimp.doc, the MS Word for Windows version 6 file of the readme.txt text file.

All the files take up a space of 273 kB on the hard disc. The text files can be deleted if required.

## 4. Operation

The program is started in DOS mode by entering the command Mimp. It can also be started from Windows 95, if the program is correspondingly integrated, under Start, Settings, Task strip in the Start add menu.

The user operates the MIMP program via 3 screens:

a) Screen for entering frequencies and impedances of transistor to be matched

b) Screen for entering components with which matching is to take place

c) Screen with Smith diagram on which transformation curve is entered

A mouse is recommended as a simple way of altering the data entered. However, there are keyboard commands which correspond to most mouse functions.

The three screens can be reached one after the other by pressing the ESC key, or by activating the right-hand mouse key.

### 4.1 Impedance screen

The program starts when the impedance screen is called up; see Fig. 1. It is divided into 4 sections:

1) Frequency table

2) Load impedance table

3) Source impedance table

4) Numerical keyboard, which can be activated by using the mouse cursor and left-clicking the mouse

First the number of frequencies must be indicated for which the source impedance and load impedance are entered. A maximum of eleven frequencies can be entered.

Next, the load impedances are entered in series form (real component + imaginary component). To enter the numerical values, use either the keyboard or

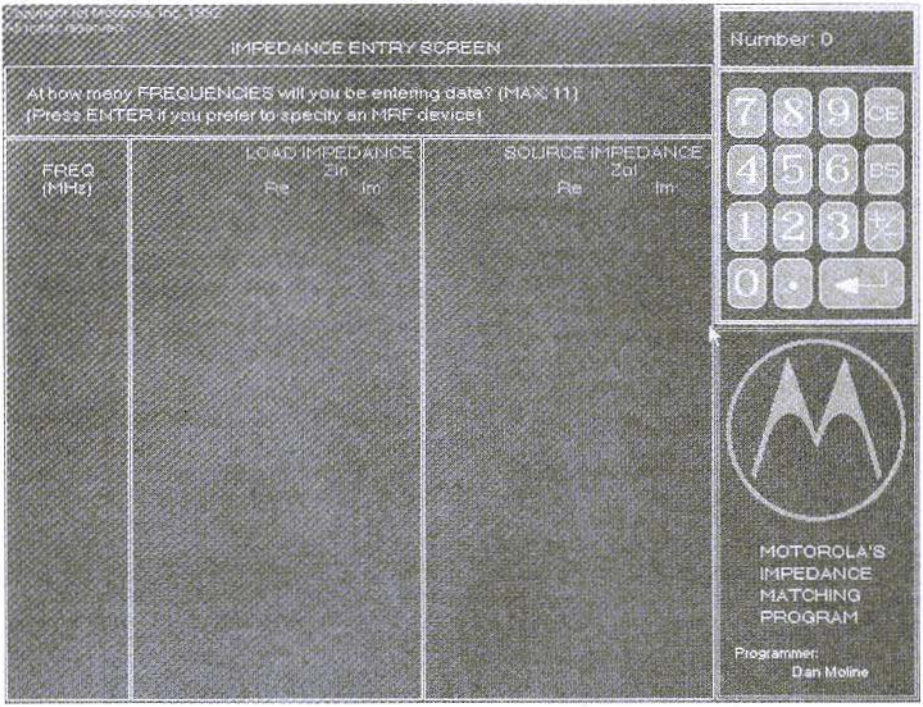


**Fig. 1: Opening screen**

the screen keyboard at the top right-hand corner of the screen, with the mouse cursor and the left-hand mouse key.

The program automatically calculates the equivalent parallel circuit, and represents these values in the line below in each case.

When all the impedances have been entered, the source impedance for each frequency must be entered. In most cases, it is desired to match the transistor to 50 real (50 + j0 ). In this case, the value can be entered by pressing the Return key (or by right-clicking the mouse).

If a standard Motorola transistor is to be used, press the Return key and select the corresponding square in which the initial letters of the transistor to be selected appears (MRF, 2N, JO, TP). Enter the corresponding numbers of the types, using the keyboard or the mouse cursor in the right-hand top corner of the screen keyboard. You must also specify whether you wish to select the input impedance or the output impedance.

A list of the transistors available can not be obtained directly. Nor can the data for additional transistors be added. The author extracted the type names from the Devfile.asc file. They are listed in Table 1. Unfortunately, since then Motorola has ceased to manufacture a number of the transistors listed in this table.

Motorola uses the conjugate complex impedance in series form for the impedances of the its transistor, specified at maximum power. Data sheets from other manufacturers may be based on

**Table 1: List of transistor impedance data available in MMIP**

| | | | | | |
|---|---|---|---|---|---|
| 2N5642 | JO4036 | MRF134 | MRF392 | MRF752 | TP301 |
| 2N5643 | JO4045 | MRF136 | MRF393 | MRF754 | TP302 |
| 2N5944 | | MRF137 | MRF406 | MRF837 | TP303 |
| 2N5945 | | MRF138 | MRF410 | MRF838 | TP304 |
| 2N5946 | | MRF140 | MRF421 | MRF839 | TP2031 |
| 2N6080 | | MRF141 | MRF422 | MRF840 | TP2032 |
| 2N6081 | | MRF148 | MRF426 | MRF841 | TP2033 |
| 2N6082 | | MRF150 | MRF427 | MRF841F | TP2034 |
| 2N6083 | | MRF151 | MRF428 | MRF843 | TP2037 |
| 2N6084 | | MRF154 | MRF429 | MRF843F | TP2180 |
| 2N6439 | | MRF161 | MRF430 | MRF844 | TP2304 |
| 2N6985 | | MRF162 | MRF433 | MRF846 | TP2314 |
| 2N6986 | | MRF163 | MRF448 | MRF847 | TP2317 |
| | | MRF171 | MRF449 | MRF873 | TP2330 |
| | | MRF172 | MRF450 | MRF890 | TP2335 |
| | | MRF174 | MRF454 | MRF891 | TP2502 |
| | | MRF221 | MRF455 | MRF892 | TP2503 |
| | | MRF224 | MRF458 | MRF894 | TP3004 |
| | | MRF226 | MRF460 | MRF898 | TP3005 |
| | | MRF227 | MRF464 | MRF1000 | TP3009 |
| | | MRF229 | MRF466 | MRF1002 | TP3010 |
| | | MRF232 | MRF475 | MRF1004 | TP3012 |
| | | MRF233 | MRF476 | MRF1008 | TP3015 |
| | | MRF234 | MRF477 | MRF1015 | TP3019 |
| | | MRF237 | MRF479 | MRF1035 | TP3021 |
| | | MRF240 | MRF485 | MRF1090 | TP3030 |
| | | MRF247 | MRF486 | MRF1150 | TP3031 |
| | | MRF260 | MRF492 | MRF1250 | TP3040 |
| | | MRF261 | MRF497 | MRF1325 | TP3060 |
| | | MRF262 | MRF553 | MRF1946 | TP3061 |
| | | MRF264 | MRF555 | MRF2001 | TP3062 |
| | | MRF314 | MRF557 | MRF2001M | TP5002 |
| | | MRF315 | MRF559 | MRF2003 | TP5040 |
| | | MRF316 | MRF607 | MRF2003M | TP9386 |
| | | MRF317 | MRF630 | MRF2005 | TPM405 |
| | | MRF321 | MRF641 | MRF2005M | TPV5055B |
| | | MRF323 | MRF644 | MRF2010 | TPV6080B |
| | | MRF325 | MRF646 | MRF2010M | |
| | | MRF326 | MRF648 | MRF2016 | |
| | | MRF327 | MRF650 | MRF2628 | |
| | | MRF329 | MRF658 | MRF4070 | |
| | | MRF338 | MRF652 | MRF5174 | |
| | | MRF340 | MRF653 | MRF5175 | |
| | | MRF342 | MRF654 | MRF10005 | |
| | | MRF344 | MRF660 | MRF10030 | |
| | | MRF390 | MRF750 | | |

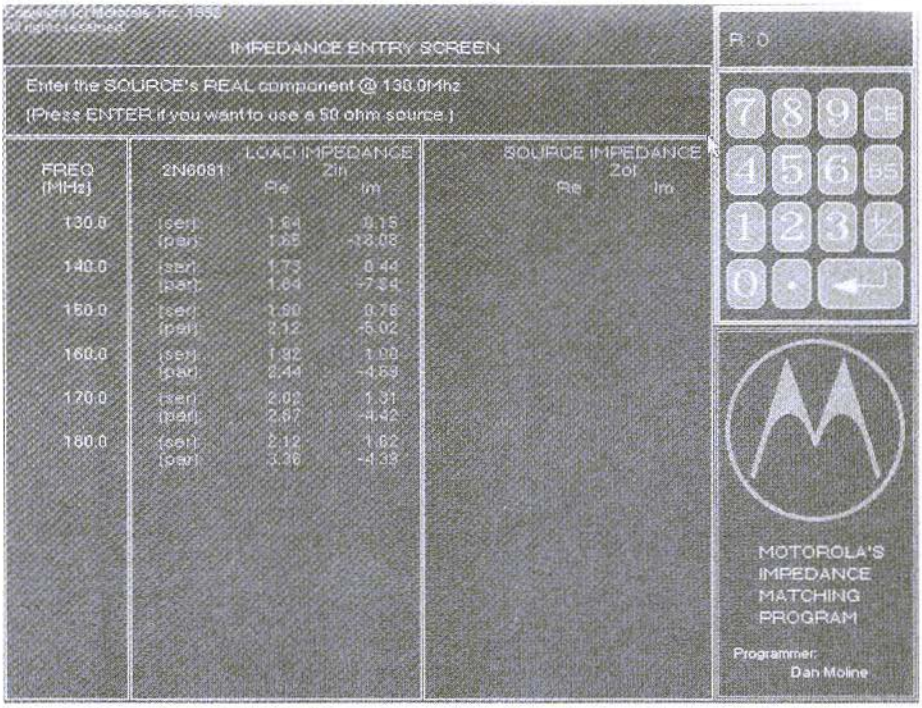


**Fig. 2: Data from 2N6081 (input impedance) can be read in from the file available in the program**

other pre-conditions, so it may be necessary to undertake a parallel-series conversion of the individual impedances. It must also be determined whether the impedance is indicated in complex form and already conjugate. If necessary, reverse the sign in front of the imaginary component to make sure the conjugate complex value is entered correctly.

When all the data has been entered, press the Return key on the keyboard or right-click the mouse to go to the next screen.

In Fig. 2, the input impedances of 2N6081 have been selected. These values are to be transformed to 50Ω .

## 4.2 Circuit input screen

This screen consists of three parts:

1) Component library

2) Numerical keyboard for entering component values using mouse cursor

3) Identification areas with selected components for impedance transformation

Fig. 3 shows this screen. Since most high-frequency power transistors are

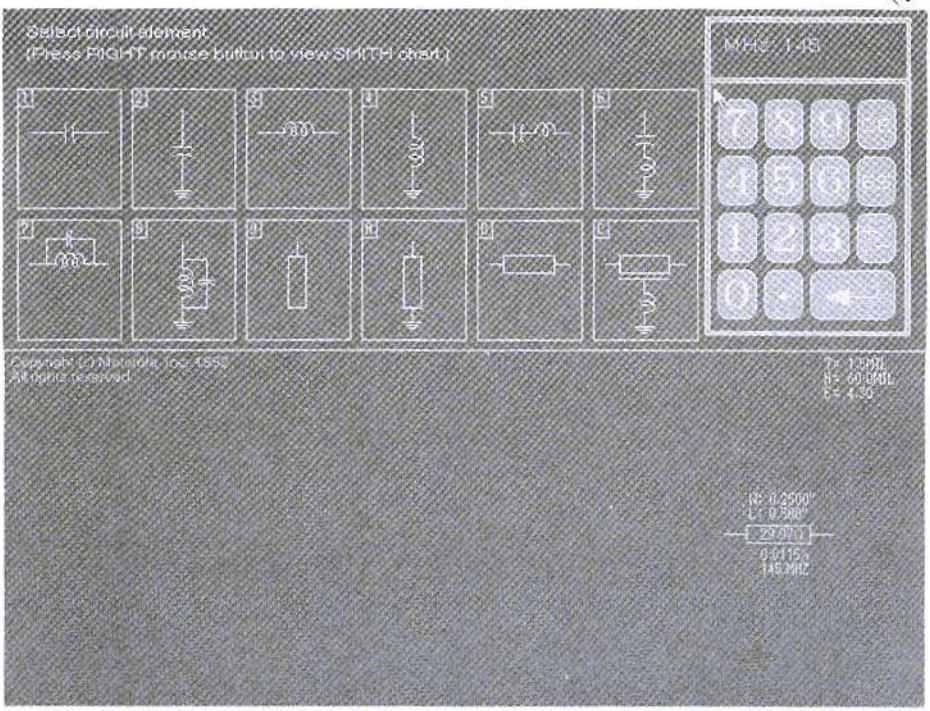


**Fig. 3: The first component has been selected (microstrip)**

supplied with wide terminal lugs, these connections can be brought in by entering a microstrip for the impedance transformation. In this case, the transistor connection are simulated using a 12.5 mm. (500 mil) long and 6.35 mm (250 mil). wide microstrip section. The terminal lug can be easily soldered onto this microstrip. This line section simultaneously forms the first transformation element of the circuit.

The component library contains sixteen components; an ideal capacitor wired in series or in parallel (component with a connection to earth), an ideal inductance, a series resonant circuit or capacitor with feed inductance, a parallel resonant circuit or coil with internal capacitance, a stub open at the end (microstrip with open end) and microstrips.

A component is selected by positioning the mouse cursor on the corresponding field and left-clicking the mouse, or by using the keyboard to press the number or letter specified in the corresponding field of the component in the top left-hand corner. The component values are then entered; capacities in pF, inductances in nH. If the user wishes to enter the corresponding reactive impedance, first press Return and then enter this value in Ohms at a specified frequency in MHz.

A microstrip is defined by its characteristic impedance (in Ohms) and its electrical length (in fractions of the wavelength). The electrical length must be specified at a frequency (in MHz).

Microstrips can also be entered through their mechanical dimensions, such as width, length and thickness of the

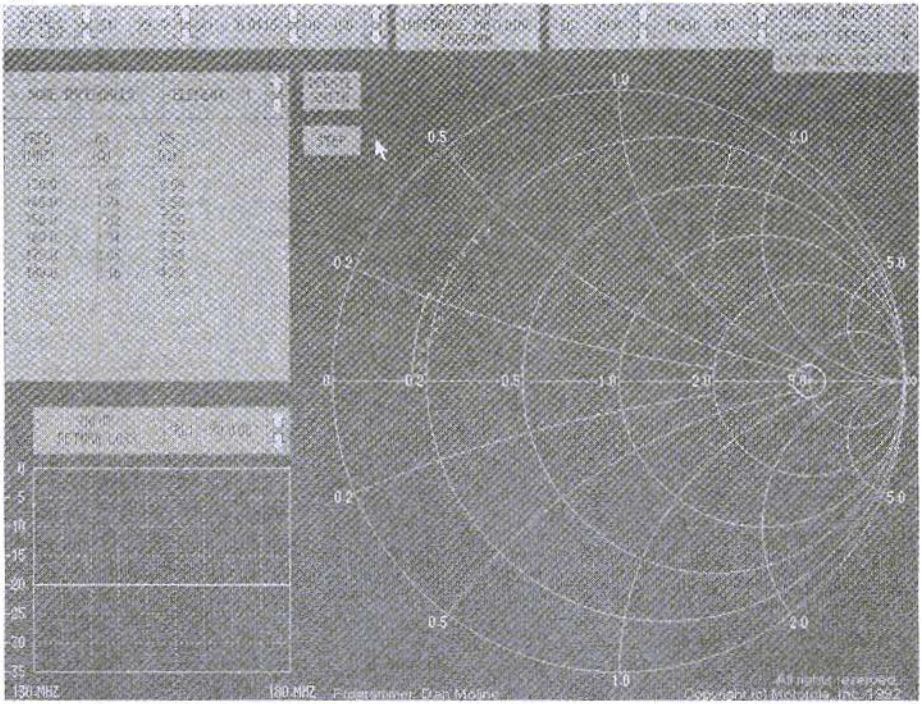

**Fig. 4: Transformation path of first element (microstrip) The system impedance is still 10Ω !**

dielectric, thickness of the conductor, or dielectric constant of circuit board material used. Dimensions must be entered in mil (= 0.0254 mm.). For conversion, the entry in mm. should be divided by the factor 0.0254 to obtain the entry in mil.. The thickness of a circuit board of 1.5 mm. corresponds to 60 mil., the thickness of the copper layer of 35 µm. corresponds to 1.6 mil, a 6.35 mm. wide microline is entered as 250 mil..

The component in box C displays one special feature. It is a real capacitor with feed inductance, which is connected to earth, and the hot end of which lies on a microstrip. In most CAD programs, it is assumed that a chip capacitor has no electrical width; i.e., it occupies an individual point in the circuit.

However, at high frequencies this simplification leads to errors, in particular at low impedances. Since a chip capacitor is usually mounted on a microstrip, its final width can cause a phase displacement, which is not negligible. A 100 mil. (= 2.54 mm.) wide capacitor has an electrical wavelength of 0.02 at a frequency of 1 GHz if it is mounted on a substrate with aluminium oxide. This error can be reduced by modelling a capacitor with the replacement circuit described in box C. Once this type has been selected, the capacity and a possible feed inductance must then be entered. Next, the characteristic impedance of the microstrip to which the hot end of the capacitor is soldered is entered. Finally, the length of the capacitor is entered in fractions of the wavelength which the capacitor uses. MIMP uses

this to calculate the effect of the two influences.

Once the circuit has been entered, the user can move on to displaying the Smith diagram by pressing the ESC key or by right-clicking on the mouse. However, if no component is selected and you try to go to the next screen by pressing Return, the program crashes.

Selected elements can be removed by activating the back-space key, which first deletes the most recently selected component. If all components have been deleted, the program switches to the previous screen.

### 4.3 Smith diagram display screen

The screen (Fig. 4) is divided into four fields:

1) Smith diagram

2) Menu field

3) Field displaying node impedances

4) Diagram for scalar representation of return loss at individual input of transformation network

The Smith diagram graphically represents the impedances which, starting from the load impedance of the transistors, have been transformed by each of the series or parallel components in the previous second screen. The individual impedance values are indicated by small crosses. To distinguish between the impedance values at the various frequencies, the crosses for each frequency are represented by a separate colour. If several series or parallel components have been used, the resulting impedances are combined and displayed as one element.

The first time the third screen is called up, the following settings are active:

The impedance values on the lowest frequency are connected.

The conjugate complex source impedance is represented by a yellow cross in a circle, which indicates impedances which amount to a return loss of 20 dB. (This conjugate complex source impedance is the desired impedance, converted through the transformation network.)

The Smith diagram is standardised at 10Ω.

The constant quality (Q) circuits are set to 0.

The impedance is represented for the last nodes.

The value of the first element can be altered in the menu field via the mouse cursor.

With the menu field, the user can:

1. Select the various components and alter their values;

2. Set the constant operating quality circuit over the range from 0.0 to 99.99 in steps of 0.1;

3. Standardise the Smith diagram to impedances between 0.1Ω and 999.9Ω ;

4. Select the frequency for which the node impedances should be represented;

5. Connect / not connect the impedance values for a selected frequency;

6. Switch the component connections (nodes) on and off;

7. Represent the impedance values of the last node alone;

8. Switch over between continuous and stepped component value change (Continuous means that the component value continues changing as long as you left-click on the mouse);

9. Change input return loss circuit from 0 to 99.9 dB;

10. Select node, the impedance of which is to be displayed;

11. Update display on Smith diagram.

To the right of some menu items, two arrows are displayed, pointing up or down. The corresponding value can be altered with their help by using the mouse cursor. The decimal point which is to be changed is underlined in red. This is selected by the mouse cursor and can be moved to the left or right by left-clicking on the mouse.

The number of the component, the value of which is to be changed, can be specified with the arrows in the first menu field.

The component values can also be changed using the keyboard. The commands can be found in the operating instructions. However, this is nowhere near as user-friendly as using the mouse. Since nowadays every PC is normally operated by a mouse, we need not go into the description of the keyboard commands.

If the Smith diagram becomes confused due to multiple component changes, press the Update Smith key to display the transformation path of the previous change. All earlier intermediate solutions are deleted.

According to the operating instructions, you should press p or P to obtain a print-out. This function can not be confirmed by the author.

In the table in the top left-hand corner, the impedance transformed at the start for the individual component is displayed, starting from the load (input or output of transistor to be matched). If the transformation network consists of several components, the impedance of all components is combined.

The return loss diagram displays (by indicating the return loss in dB) how well the transformed impedance matches the desired source impedance. The pre-set return loss value of 20 dB corresponds to a VSWR of approximately 1.2 and is sufficient in most cases.

To leave the program, use the keyboard command Ctrl-X.

## 5.

## On Balance

The MIMP program can be used to design matching circuits for transistor amplifiers in a very clear manner. One of the things the author likes about this program is that the component values can be changed using a mouse. Thus, you can begin with an estimated value and then arrive at the desired result by changing the values. The effect of the changes is shown immediately in the Smith diagram. You can play around a bit and test the effects of various components on the impedance transformation.

Unfortunately, no circuits can be saved. Nor can the transformation circuit and the Smith diagram be printed directly from the program. Moreover, the online help normally available for Windows programs is missing. However, since operating with the mouse is very simple, no new commands need to be learned, not even the keyboard command for terminating the program.

## 6.

## Literature

[1]
p.html

Calculations for microstrips are carried out using the formulae in [2].

*Richard A. Formato, Ph.D., WW1RF*

# Designing Long Yagis with YGO3

**Yagi Genetic Optimizer, version 3 (YGO3) is freeware intended for serious amateurs who want to explore Yagi design using one of the most powerful techniques available. Its genetic algorithm includes state-of-the-art techniques, such as quadratic interpolation, auto-grooming, coefficient perturbation, coefficient activation, several selection methods, and two crossover methods. It handles up to 150 element arrays at up to 50 frequencies. YGO3 is a DOS program that may be run in a DOS window in a Windows environment. This article explains how to use YGO3 and describes some techniques and typical results for 3- and 23-element arrays.**

## 1. How GAs Work

YGO3 is a *genetic algorithm* (GA), a class of software that stochastically optimizes a design problem by mimicking natural selection (survival of the fittest). In much the same way that Nature creates progressively fitter individuals in a species by passing along good genes and discarding bad ones, the GA produces progressively better designs by doing the same thing in a virtual world. Inside the computer, the species is Yagi, an array of parallel, parasitic linear elements in which one is fed (the driven element, DE), one or more act as reflectors (REF), and the others serve as directors (Di). The Yagis structure is fully determined by a set of *antenna genes* that include all of its design parameters.

Because the Yagi is a simple antenna, at least geometrically, its gene structure is also simple. A Yagi is fully specified by listing the length, spacing, radius, and offset of each element in the array, so that each element has four genes. The total number of genes describing a complete design, N, is four times the number of elements. In YGO3s virtual world, each Yagi array is a row-vector of N real numbers; and every possible N-vector defines a unique Yagi. These vectors are the *chromosomes* that YGO3 manipulates to select progressively better antenna designs.

GA's are fundamentally different from analytical optimization techniques, and often can be used when analytical methods utterly fail. Analytical optimizers usually compute derivatives to locate the extremum points (maxima and minima) of the function being optimized (so-called gradient methods). GA's, by

contrast, create random *populations* of *individuals* (chromosomes) that are evolved to converge to an optimum solution. Gradient methods produce a single "best" answer; but they are often trapped in local extrema which prevent the global optimum from being found, thus completely missing the true best solution. By contrast, GA's produce groups of solutions, no one of which is necessarily the global optimum, but all of which are "good" solutions. YGO3 generates groups of Yagi designs, all of which are close to optimum antennas, even if not the absolute best one.

YGO3 evolves an initial population of random chromosomes by creating successive generations of chromosomes. The population size is constant from generation to generation, but the individuals comprising the population are genetically altered from one generation to the next using three genetic operators: **selection**, **crossover**, and **mutation**. The *selection* operator chooses the parent chromosomes that are used to create child chromosomes in the next generation. The *crossover* operator "mates" the parents to actually create the children. Selection and crossover may be implemented in many different ways; the details of how YGO3 performs these operations are discussed below. The *mutation* operator makes random changes in the gene values, usually with a low probability, replicating the random genetic mutations that occur in biological evolution.

One of the most important features of a GA is its ability to optimize a population using any desired measure of goodness or fitness. Unlike gradient methods that cannot optimize over discontinuities, GA's easily handle discontinuous functions. The only requirement for a *figure-of-merit* (FoM) is that it be calculable. The data used to calculate the FoM are almost always generated by a separate computer program (*calculation engine*) that models the system being optimized, not by the GA itself. YO3 uses NEC-2D as its calculation engine, but any suitable Yagi modeling program could have been used instead.

In every generation the GA computes an FoM for each of the chromosomes (specific Yagi designs), which are then ranked from best to worst according to the FoM values. GA's often minimize the objective function, but YGO3 maximizes the FoM because it seems to make more sense to assign the highest value to the best antenna, not the worst. When a generation has been fully processed, the best antenna design (highest FoM) becomes the first row-vector in the *generation matrix*, and the worst design (lowest FoM) becomes the last row-vector.

Generation after generation is created in this way, with the expectation that each successive generation will contain better antenna designs. This expectation rests on a selection process that favors better parent chromosomes which presumably create better children. But, because of its stochastic nature, a GA may not create improved designs in every successive generation; the best FoM value may actually go down. Experience has demonstrated, however, that a well-designed GA will converge to an optimized solution if allowed to run for enough generations with a sufficiently large population size.

## 2.

## Installing YGO3

Readers who have used YGO3 and are familiar with its terminology and setup might want to jump directly to section 4, which describes typical results. YGO3 is downloadable from at least two Internet websites: the ***VHF Communications*** magazine website, ; and Ray Anderson, WB6TPUs ***NEC Archive*** website, . To install the program,

create the directory in which you wish to run the program, usually C:\YGO3, copy the file YGO3INST.EXE into that directory, and execute it at the DOS prompt.

The important files created by the install program are: YGO3.EXE, the genetic optimizer; YGO3PLOT.EXE, a utility that displays the YGO3 summary data file YGO3.DAT and an array's radiation pattern; YGO3PL1.EXE (auxiliary program used by YGO3PLOT.EXE), which can be run stand-alone if the user does not wish to view the summary data file; SWEEP.EXE, a utility that computes a Yagi's performance over a range of frequencies; several self-extracting NEC-2D files (NSE*.*), which are discussed below; and Q.EXE and associated files. Other configuration files are also created. Q is a shareware full-screen text editor that may be useful for editing YGO.CFG and certain other YGO3 files. In order to display YGO3 pattern plots, you must specify the type video monitor in your system; the file VIDEO.TXT provides details.

## 3.

## The Configuration File, YGO3.CFG

All parameters for a YGO3 run are contained in a user-edited configuration file, YGO3.CFG. If this file does not exist when YGO3.EXE is executed, a default version is created, which can then be modified. The format of YGO3.CFG is important because key phrases are parsed in order to assign parameter values. Only numerical values and obvious ASCII fields should be modified. YGO3.EXE does do extensive input data checking, and will usually trap typographical errors or out-of-range entries. But the user should use reasonable care when editing the config file. What follows is a description of key input variables in the order in which they appear.

### 3.1 NEC-2D Setup

***NEC2 Executable***: The first input variable is the NEC2 executable file name. The install program creates several self-extracting NEC-2D files (NSE*.*). Each of these, in turn, creates a NEC executable whose name includes the maximum number of segments that can be modeled. For example, NEC2D100.EXE handles antennas with up to 100 segments. The user must specify the exact name of the NEC executable used by YGO3.

The reason for allowing different executables is to tailor the NEC model to the antenna size. Because NEC-2D file size increases dramatically with segmentation, the user is advised to select the smallest executable consistent with the antenna model. For example, a 5 element Yagi with 9 segments per element requires a version of NEC-2D that handles only 45 segments. Using a substantially larger version of NEC-2D is inefficient and needlessly time-consuming. The file NEC2INFO.TXT contains information on the NSE*.* files included with YGO3.

The NEC-2D executables may be run as stand-alone programs. The file INFILE.DAT must be present in the default directory, and it must contain two entries: the NEC input file name on line 1, and the desired output file name on line 2. Each file name must be capitalized and not in quotation marks. Any valid DOS files names are allowed, and the input file must also be in the default directory.

***# NEC Input Files Saved***: A NEC-2D input file is created for each chromosome (Yagi design) in each generation. If the population size is 100, for

example, each generation creates and processes 100 NEC input files. Most of these are very poor Yagis, but the best ones hopefully become better with successive generations. This variable specifies how many of these files, ranked best to worst, are saved to disk during each generation, and the next variable specifies the generation at which files start being saved. Representative values would be to save the best three files in each generation starting with generation 20, say, in a run with a maximum of 50 generations. Saving too many files too soon in the GA's progress is wasteful of disk space, but early designs can be useful ones and should at least be examined. How many files are saved and when saving starts are best determined by experimentation.

### 3.2 Array Parameters

***Elements, Segments, Zo***: The number of array elements, the number of segments per element, and the feed system characteristic impedance define the array to be optimized and how NEC-2D will segment it. As a general rule, at least 7 segments per element should be used. More segments may be required for certain designs (for example, those whose element lengths vary quite a bit). The NEC-2 documentation [1] should be consulted for modeling guidelines and limitations. The feed system characteristic impedance is purely resistive and must be in the range 1-999 ohms.

***Feed Point, Offset***: YGO3 allows the DE to be fed at its center or along the arrays boom (defined as the +X axis, angle phi=0, in NEC's rectangular coordinate system). Usually there is no question of where the DE is fed in standard Yagi designs, because all elements are centered on the boom. YGO3, however, allows the user to specify an element offset, which displaces the element to one side or the other of the boom. The offset parameter has been included for flexibility, because there is reason to believe that a slight offset may be advantageous for increasing impedance bandwidth while maintaining high gain.

***Tune out X***: The antenna input impedance consists of a resistance, R, and a reactance, X, both of which are used in calculating the FoM. Tuning out the reactance allows the user to "zero out" X for purposes of calculating the FoM. The values of both R and X are displayed on the pattern plots generated when YGO3.EXE has completed the run, and the auxiliary program SWEEP-.EXE displays as a function of frequency tables of R, X, and SWR with and without X included.

***Max Boom***: Maximum boom length sets an upper limit on how long the optimized antenna can be. This parameter is especially useful when space constraints are an issue, which is frequently the case. Note that this parameter is specified in wavelengths at the lowest design frequency (as are all dimensions in YGO3).

***Same Radius***: The element radius is one of the array genes, and in general it varies from element to element. But building an array containing elements with different radii may be impractical, even if optimization requires varying radii. YGO3 addresses this consideration by allowing the user to force all elements to have the same radius, determined using the minimum and maximum radius values specified in gene #2 in the Gene Table (see below).

### 3.3 Genetic Algorithm Parameters

***Population, Generations, Chromos/Gen***: There are many parameters that specify how the GA is configured. Some are self-evident, and others require explanation. The *population size* is

the number of chromosomes (individual antenna designs) included in each generation. As a general rule, values in the range 70-200 provide a good starting point, depending to some degree on how fast a CPU is available. The maximum number of *generations* is an absolute upper limit on how long YGO3 will run. Once the limit is reached, the YGO3 stops and summarizes its results. Output data are summarized in the file YGO3.DAT, which tabulates generation-by-generation the FoM's for the best chromosomes. The parameter *% chromos/gen* limits how large these tables can be. For example, if this parameter were set to 10 with a population size of 88, then the FoM for the 9 (8.8 rounded to nearest integer) best chromos per would be tabulated for each generation.

***Save Percentage***: One way to guarantee that the best FoM will increase from one generation to the next is to insert the best chromosomes from each generation into the next one, bypassing the selection, crossover and mutation operators for those chromosomes. This strategy is frequently referred to as "elitism". Its benefit is obvious, but there may be a cost, namely loss of diversity in the population. If elitism is used, the percentage of best chromos inserted into the next is specified by the *save percentage* variable. Any non-zero value results in at least one chromo, the best one, being passed on. YGO3 rounds the percentage multiplied by the population size to the nearest integer to determine how many chromos are passed generation to generation.

***Crossover Probability***: For chromos processed by the standard genetic operators, the *crossover probability* specifies the chances that a child chromo will be created from the parent chromos chosen by the selection operator. Not all parent chromos are automatically "mated" or "crossed over" to create children. Child production is a random process that occurs with the user-specified probability. If the probability is 1, then all parents do produce children, whereas a probability of 0 results in no children..

Note, however, that even with a zero crossover probability, the next generation will almost certainly be different than its predecessor. The reason is that a zero probability "child" chromo is a copy of one of its parents, chosen at random between the two or three parents that have been selected. Thus, even with zero crossover probability, generation-to-generation the distribution of chromosomes is modified, even though no individual in the next generation is not contained in the preceding one.

***Mutation Probability, Max Rate***: Mutation is the process of randomly changing a gene's value. The *mutation probability* specifies the likelihood that any individual gene in a chromo will be modified. The conventional wisdom is that the mutation probability should be low, typically a fraction of one percent up to, say, two percent. But recent results indicate that much higher values may be advantageous for antenna design [2].

In addition to specifying the chances that a gene mutates, the user must also specify a maximum *mutation rate*, which is the largest number of genes per chromo that can be changed. For example, if a 7 element array is being optimized, each chromosome consists of 7x4=28 genes. For a mutation probability of 0.01, gene-by-gene, there is a 1 in 100 chance that each of the 28 genes will be assigned a new random value in its allowable range. If the user wishes to limit the number of genes mutated, the maximum mutation rate prevents additional changes in a chromosome once the maximum number of mutated genes has been reached. In order to subject all genes to mutation, the maximum mutation rate must be equal to the number of genes in each chromosome.

***Target FoM***: The FoM computed for each individual in each generation

measures how good a particular Yagi design is. After gaining some experience optimizing a specific Yagi, the user may develop a good intuition of what an optimum or near-optimum FoM might be. In order to limit run time, the user can specify a target FoM, which, if reached, will automatically terminate execution. This feature is also useful in generating seed chromosomes for use in subsequent runs.

***Seed Chromosome***: The best chromo in a YGO3 run is saved in the file YGO3SEED.DAT (only for generations without coefficients perturbation as described below). This file may be used to seed a subsequent YGO3 run, thereby initiating the GA search around a particular solution in its decision space. If a seed chromosome is used, the seed file name must be specified in YGO3.CFG. YGO3SEED.DAT may be renamed or edited to contain any design the user wishes. The seed chromo is automatically inserted as chromo #1 in generation #1.

***Auto Delete Old Files***: YGO3 can generate a lot of files, especially for large runs in which several NEC input files are saved. Saving 3 files for each of 200 generations, for example, produces 600 NEC input files on disk. These files can be deleted individually, or YGO3 can be instructed to delete them. By turning on this option, all files associated with a prior run are deleted. If there are files you wish to save, typically YGO3.CFG, YGO3SEED-.DAT (seed chromosome file), YGO-3.DAT (summary output file), and some of the NEC-2 input files, then they must be copied or moved *before* starting the next YGO3 run.

***Max Generations with Same FoM***: When YGO3 has converged on a solution, the tendency is for the best FoM to saturate. More and more chromosomes achieve FoM's approaching the highest value, and the best FoM may not change from one generation to the next. One way to explore other regions of the decision space is to trigger some action when a user-specified number of consecutive generations have the same FoM. If no action is desired, this variable should be equal to or greater than the maximum number of generations. When the condition is met, YGO3 allows two different responses: terminate execution because an optimized design has been achieved, or repopulate the next generation with a new set of random chromosomes. If the save percentage is non-zero, then the best chromo from the previous generation will always be included in the next generation, even if it is randomly populated. This strategy increases the genetic "diversity" of the population, and may result in even better designs.

***Coefficient Perturbation***: The conventional approach to expanding the GA's search space is to increase genetic diversity by inserting new, randomly created individuals when a specified convergence criterion has been met. Another approach, one that is unique to YGO3, is to slightly perturb the FoM itself. Because the FoM coefficients are user-specified, usually without prior knowledge of what performance balance a particular set of coefficients achieves, perturbing the coefficients allows the GA to search unexplored regions of the solution space, possibly converging on solutions that are better than those using the initial FoM. The perturbation method is intended to address the lack of information inherent in choosing FoM coefficients by trial and error. Another reason for this approach is that optimized solutions may vary quite a bit as the FoM is changed, which reflects the highly multi-modal nature of antenna problems. Perturbing coefficients may explore these solutions.

YGO3 allows the user to turn on coefficient perturbation, and to specify the maximum percentage variation and the number of generations between perturbations. If, for example, a 10% variation were allowed every 5-th

generation, then in generations 5, 10, and so on, each coefficient is separately perturbed by a random amount up to plus or minus 10% of its unperturbed value. Because different coefficients are used in a perturbed generation, FoM's between perturbed and unperturbed generations cannot be compared. For this reason, no seed chromosome is saved from a perturbed generation.

***Auto Grooming***: Auto grooming is another diversity-increasing technique [3]. It *grooms* the population by retaining the best individuals while the rest of the population is refreshed with new, separately evolved chromosomes. Auto grooming occurs when a specified percentage of the population (*senior population*) in any generation exceeds a specified fitness threshold. *Fitness* is the FoM normalized to the interval [0,1], best to worst.

For example, with population and fitness thresholds of 15% and 0.75, respectively, auto grooming begins when 15% or more of the chromosomes achieve fitness of 0.75 or greater. Auto grooming then creates an entirely new random population that is evolved for a number of *quarantine generations*. At the end of the quarantine period, the senior population is inserted into the newly evolved one, hopefully creating a generation with greater genetic diversity while retaining the best previously evolved individuals.

***Selection Methodology***: The genetic operator of *selection* chooses from the current generation the parent chromosomes that are crossed over ("mated") to create child chromosomes for the next generation. YGO3 includes six different selection methodologies: roulette wheel (RW); binary tournament (BT); proportionate (PR); emperor selective (EMS); best-mate-worst (BMW); and alternate fitness pairing (AFP). YGO3 also includes a seventh choice, random mix (MIX), in which two or more of the six methods are randomly mixed.

Each selection method chooses either two or three parents depending on which crossover methodology is used (see below). Individual parent chromos are chosen by the different methods as follows. In RW selection, each chromosome in the parent generation is assigned a slice of a numerical roulette wheel in proportion to its fitness (normalized FoM). A spin of the wheel randomly chooses the parent chromosome. BT selection randomly chooses two individuals, then compares their fitnesses in order to select the better parent chromosome. In PR selection, a fitness threshold is randomly assigned above a user-specified minimum fitness, and the chromosome first exceeding the fitness threshold, worst to best, becomes the selected parent chromo.EMS selection includes the best chromosome from the parent generation and selects as the other parent, in order, all the other chromos. BMW selection pairs the best chromos with the worst, starting with the first and the last, then second and second-to-last, and so on. If a third parent is required, the top two are selected with the worst, then the second and third with the next to last, and so on. AFP selection chooses adjacent chromos, pairwise or in groups of three depending on how many parents are needed. The EMS, BMW and AFP methods for two parents are described in [3], and have been modified for the three-parent case in YGO3.

***Crossover Methodology***: YGO3 includes three *crossover* operators that mate the parent chromos to create child chromos. Gene *splicing* (SPL), which requires two parents, breaks each of the parent chromos at the same randomly selected gene, and concatenates the first piece of each parent chromo with the second piece of the other parent. Splicing is probably the most commonly used crossover method.

For completeness, YGO3 includes two other methods. In gene *averaging* (AVG), the genes of each of two

parents are simply numerically averaged, gene-by-gene. *Quadratic interpolation* (QUAD) is a modification of Adewuya's method [4]. Three parent chromos are required, and gene-by-gene, the values of the three parents' genes are used to generate a quadratic curve fit (FoM plotted against gene value). If the fit is successful and the parabola's extremum is a maximum, then the new gene value is the interpolated value corresponding to the extremum. If the interpolated value falls outside the gene's allowable min/max range, the user optionally can permit such out-of-range crossover. If quadratic interpolation fails, or, if successful but out-of-range values are not allowed, then gene averaging is used on the two best parent chromos. And, if both parent chromos happen to have the same gene value, then a randomly assigned new value is used to mate the parents.

Experience appears to favor gene splicing as the preferred crossover method. It is arguably the most effective. Nevertheless, amateurs interested in antenna design may find the other methods attractive as well, and only extensive experimentation will determine which of these methods works best for designing Yagis.

***Figure-of-Merit***: Each chromosome has an associated figure-of-merit (FoM) which measures how "good" the chromosome is. YGO3 includes two user-selectable FoM's that combine the Yagi's most important electrical performance parameters: forward gain, SWR, input impedance, front-to-rear and front-to-back ratios, and maximum sidelobe level. Each parameter is weighted by a user-specified coefficient that can vary by frequency. By appropriately choosing coefficients, just about any desired combination of relative importance can be assigned to these antenna performance parameters. The Yagi's overall FoM is the average of the FoM's at each frequency.

Coefficients are entered in the frequency table (see below). Note that coefficients **b** and **c** are used differently in the two FoM's. In version 1, **b** is the SWR weighting factor, and **c** is the SWR threshold in the unit step function. In version 2, **b** is the input resistance weighting factor, and **c** is the input reactance weighting factor.

***Coefficient Activation Mode***: Coefficient activation allows the user to specify the generation at which each of the FoM coefficients is first used (*activated*) in computing the figure-of-merit. Once activated, a coefficient remains active for all subsequent generations. Enabling this mode changes the decision space searched by the GA, depending on which coefficients are active and when.

An example of how this mode might be used is to first optimize SWR by using FoM version 1, turning on coefficients **b** and **c** in generation #1, and coefficients **a** and **e** in generation #10, with **d** and **f** set to zero in the frequency table. During generations 1-9, inclusive, YGO3 will optimize only against SWR. In generation 10, forward gain and FR are included in determining the FoM, and the previous best SWR solutions are contained in the population used for the overall optimization. How well this mode works, and when various coefficients should be turned on, are questions that only can be answered empirically. YGO3 users are encouraged to experiment with different configurations to see how useful coefficient activation is. If this mode is disabled, the activation table is ignored.

### 3.4 Frequency Table

The frequency table contains the frequencies at which the Yagi is optimized, along with the weighting coefficients for the FoM at each frequency. The user must specify how many frequencies are used (maximum of 50). It

is not necessary to truncate the table to include only the frequencies used; frequency data are read in order with entries for unused frequencies being ignored. The frequency table includes an entry for the driven element (DE) number, which may vary frequency by frequency. Using different DE's at different frequencies may be useful for multi-band designs, or for increasing the bandwidth of a single band antenna. Inactive DE's are loaded at their feed point with a resistance equal to the purely resistive feed system characteristic impedance.

### 3.5 Gene Table

Minimum and maximum values of the four genes for each Yagi element (length, radius, spacing, offset) are tabulated in the gene table. All entries are in wavelengths at the lowest used frequency in the frequency table. The user may supply an optional name for each gene up to 17 characters long. Only genes needed for the specified Yagi are read from the table. For example, the design for a 3-element array consists of 12 genes, so that all entries from gene #13 on are ignored. Note that genes are read in order, element-by-element, so that their position in the gene table is important.

The values assigned in this table define the region in solution space that may be searched by the GA. No solutions outside the allowable range of parameters are considered (except in quadratic interpolation as described above). Setting min/max values is therefore a balancing act. Too narrow a range might exclude useful and interesting solutions, but too broad a range will certainly slow the GA and might cause it to miss a good solution because it has not searched long enough.

Experience is the most important factor in creating the gene table. One approach that works well is to use a broad search to generate some good solutions that are then used to seed subsequent searches in which the decision space is narrowed around those solutions. For example, an initial search might allow DE lengths in the range 0.25-0.65 waves. If solutions tend to be found primarily near DE's around 0.5 waves long (usually the case), then subsequent runs, with or without a seed chromo, might restrict the search to 0.45-0.55 wave DE lengths.

## 4.

## Typical YGO3 Results

### 4.1 3-Element Yagi

This section describes a typical YGO3-optimized 3-element Yagi (for other GA-designed arrays, see file YAGI_GA.TXT included with YGO3). All elements are centered on the boom (no offset), and all use the same diameter. The reflector (REF) is 0.5052 wavelengths (*waves*) long. Length of the driven element (DE), which is fed at its center, is 0.4850 waves. The director (D1) is 0.4375 waves long. DE is spaced 0.1063 waves from REF, and D1 0.1207 waves from DE. The total boom length is 0.227 wavelengths, which is a short antenna. Each element has a diameter of 0.00544 waves.

SWR for the YGO3 array is less than 2 between Fn=0.955 to Fn=1.000, an SWR bandwidth of 4.5%. Note that Fn=F/Fo is the *normalized frequency* (ratio of operating frequency to design frequency). The SWR minimum is flat at 1.6 from Fn=0.97 to 0.985. The Yagi's FR increases from 19.8 dB at Fn=0.99 to a maximum of 24.3 dB at Fn=1.01, then decreases to 20.1 dB at Fn=1.02. The forward gain gradually increases from a minimum of 7.3 dBi at

| F/Fo | Rin | Xin | SWR | Gmax | FR | HPBW |
|---|---|---|---|---|---|---|
| 0.9500 | 24.20 | -12.10 | 2.2 | 7.3 | 8.4 | 64.4 |
| 0.9525 | 25.40 | -10.60 | 2.1 | 7.3 | 9.1 | 64.6 |
| 0.9550 | 26.50 | -9.20 | 2.0 | 7.3 | 9.7 | 64.8 |
| 0.9575 | 27.50 | -7.90 | 1.9 | 7.3 | 10.4 | 64.8 |
| 0.9600 | 28.50 | -6.70 | 1.8 | 7.3 | 11.0 | 65.0 |
| 0.9625 | 29.30 | -5.70 | 1.7 | 7.3 | 11.7 | 65.0 |
| 0.9650 | 29.90 | -4.70 | 1.7 | 7.3 | 12.3 | 65.2 |
| 0.9675 | 30.50 | -3.80 | 1.7 | 7.3 | 13.0 | 65.2 |
| 0.9700 | 30.90 | -2.90 | 1.6 | 7.3 | 13.6 | 65.2 |
| 0.9725 | 31.20 | -2.00 | 1.6 | 7.3 | 14.3 | 65.2 |
| 0.9750 | 31.30 | -1.20 | 1.6 | 7.3 | 15.0 | 65.2 |
| 0.9775 | 31.30 | -0.30 | 1.6 | 7.3 | 15.7 | 65.4 |
| 0.9800 | 31.20 | 0.60 | 1.6 | 7.3 | 16.5 | 65.4 |
| 0.9825 | 31.00 | 1.50 | 1.6 | 7.3 | 17.2 | 65.4 |
| 0.9850 | 30.60 | 2.50 | 1.6 | 7.3 | 18.1 | 65.4 |
| 0.9875 | 30.20 | 3.50 | 1.7 | 7.3 | 18.9 | 65.4 |
| 0.9900 | 29.60 | 4.60 | 1.7 | 7.3 | 19.8 | 65.2 |
| 0.9925 | 29.00 | 5.80 | 1.8 | 7.3 | 20.8 | 65.2 |
| 0.9950 | 28.30 | 7.00 | 1.8 | 7.4 | 21.8 | 65.2 |
| 0.9975 | 27.50 | 8.30 | 1.9 | 7.4 | 22.8 | 65.0 |
| 1.0000 | 26.70 | 9.80 | 2.0 | 7.4 | 23.1 | 65.0 |
| 1.0025 | 25.80 | 11.30 | 2.1 | 7.4 | 23.4 | 64.8 |
| 1.0050 | 24.90 | 12.80 | 2.2 | 7.4 | 23.7 | 64.6 |
| 1.0075 | 24.00 | 14.50 | 2.3 | 7.5 | 24.0 | 64.6 |
| 1.0100 | 23.00 | 16.30 | 2.5 | 7.5 | 24.3 | 64.4 |
| 1.0125 | 22.10 | 18.20 | 2.6 | 7.6 | 23.7 | 64.2 |
| 1.0150 | 21.10 | 20.10 | 2.8 | 7.6 | 22.6 | 64.0 |
| 1.0175 | 20.10 | 22.10 | 3.0 | 7.6 | 21.3 | 63.8 |
| 1.0200 | 19.10 | 24.20 | 3.3 | 7.7 | 20.1 | 63.6 |
| 1.0225 | 18.20 | 26.40 | 3.6 | 7.7 | 18.9 | 63.4 |
| 1.0250 | 17.20 | 28.70 | 4.0 | 7.8 | 17.8 | 63.2 |
| 1.0275 | 16.30 | 31.10 | 4.4 | 7.8 | 16.7 | 63.0 |
| 1.0300 | 15.40 | 33.50 | 4.8 | 7.9 | 15.7 | 62.8 |
| 1.0325 | 14.50 | 36.00 | 5.3 | 7.9 | 14.8 | 62.4 |
| 1.0350 | 13.70 | 38.50 | 5.9 | 8.0 | 13.9 | 62.0 |
| 1.0375 | 12.90 | 41.10 | 6.6 | 8.0 | 13.0 | 61.8 |
| 1.0400 | 12.20 | 43.80 | 7.4 | 8.1 | 12.2 | 61.6 |
| 1.0425 | 11.40 | 46.50 | 8.3 | 8.1 | 11.4 | 61.2 |
| 1.0450 | 10.80 | 49.20 | 9.2 | 8.2 | 10.6 | 60.8 |
| 1.0475 | 10.10 | 52.00 | 10.4 | 8.2 | 9.9 | 60.4 |
| 1.0500 | 9.50 | 54.90 | 11.7 | 8.2 | 9.2 | 60.0 |

**Table 1 : Performance Data for YGO3-Optimized 3-Element Array**

Fn=0.95 to 8.2 dBi at Fn=1.05. Performance data for a 10% band centered on the design frequency are shown in Table 1.

For comparison, the 3-element 10-meter Yagi described in [5] has a similar boom length, 0.232 waves, but uses tapered elements and a fourth "compensator" placed closed to D1. Its SWR is 1.7 at 28 Mhz, decreasing to just over 1 at 28.4 Mhz, then increasing to 2 at 29 Mhz. The SWR bandwidth is 3.45% (relative to 29 Mhz). The antenna's FR increases from 20.4 dB at 28 Mhz to a maximum of 23.5 dB at 28.6 Mhz, then decreases to 19 dB at 29 Mhz. Gain is 7.2 dBi at 28 Mhz, increasing slowly to 7.3 dBi at 28.6 Mhz and to 7.5 dBi at 29 Mhz.

### 4.2 Long Yagis

Designing a long Yagi requires much more consideration of the design approach than does a small array, for two reasons: (1) YGO3 is a very flexible GA that allows extensive customization; and (2) the decision space for long arrays is extremely complex (highly *multi-modal*, a very large number of peaks and valleys in the FoM). The first factor means that the long-array designer should spend sufficient time analyzing and specifying key parameters, especially run length and FoM coefficients. The second factor means that very long arrays require longer search times, so that prematurely terminating the GA inevitably leads to suboptimum results. Fortunately, there is a single, simple measure of whether or not a particular run is done, the FoM. When the figure-of-merit does not change appreciably from one generation to the next for several generations, then further improvements very likely will be minor. The designer can be confident that an optimum solution has been found when clearly this is the case. In order to illustrate some of these ideas, a 23-element array will be designed using two different approaches.

***23-Element, Design #1***: The first design approach is *iterative*. An initial run is made with a set of FoM coefficients chosen to optimize just one performance parameter, say SWR or forward gain. Subsequent runs, which are seeded with the previous runs results, use different coefficients chosen to improve the other performance measures. The idea is to control the region of FoM-space that is searched, while still allowing the GA to explore other solutions. Successive runs with different FoM coefficients can accomplish this purpose.

As an example, a 23-element array will be designed for Fo=145 Mhz. The default YGO3.CFG file is used with equal diameter elements (gene #2 min/max values were set to 0.00307 at Fo waves so that all elements have the same diameter, ½ inch). Four runs were made with the number of chromosomes, generations, and coefficient values tabulated below. Run 1 has no seed chromosome; runs 2-4 are seeded with the best chromo from the previous run (contained in file YGO3SEED.DAT). FoM1 is used because it includes the SWR, not the individual components of the input impedance. Coefficient **c** is the SWR threshold, and **b** is the SWR weighting factor. Since the purpose of the first run is to minimize SWR, the threshold is set to 1.8, and **b** is much more heavily weighted than the other coefficients.

It is important to realize that FoM coefficient values cannot be compared directly, both because of the wide range of values associated with the parameters they multiply, and because of the electromagnetic behavior of the parasitic array. Setting two coefficients to the same value does not mean that their corresponding performance factors are equally weighted. The forward gain of a

long array, for example, might be expected to lie in the range 15-18 dBi, but its FR might easily be closer to 30 dB. If these factors were considered equally important, the first thought might be to weight them more or less equally by making coefficient **a** about twice as large as **e**.

But this approach is incorrect, for the simple reason that an array with a high forward gain invariably has at least a good FR figure. The act of directing radiation away from the reflector along the arrays boom necessarily minimizes radiation leaking to the rear. Of course, this characteristic does not mean that FR can be ignored. What it does mean is that the manner in which coefficients are chosen is largely a matter of experience with the specific array being designed. After a few runs, the designer will begin to understand the relative importance of the FoM coefficients in determining overall performance.

Table 2 also shows how forward gain (dBi), SWR, array length (waves), and FR (dB) vary with successive runs. In the first run, the SWR of 1.51 is quite good, but the gain is very low at 5.5 dBi. In run 2, the gain is weighted much more heavily. The result is that G increases dramatically with a substantial improvement in FR, while the SWR changes negligibly. The coefficients in runs 3 and 4 were chosen to further enhance gain, which can only be accomplished at the expense of somewhat higher SWR, as the data show.

Progressively longer runs were used in order to be certain of FoM convergence. In run 1, the best FoM was constant from generations 38-50; in run 2, from 95-100; in run 3 , from 193-200; and in run 4, from 198-200. While there is room for further improvement, the rate at which the FoM improves begins to decrease as the run length increases. The designer must decide when to stop, based on how well the design objective has been met. YGO3 does automate some of these decisions by allowing coefficient activation, and either run termination or repopulation when the FoM begins to saturate. Even though these features are not been used in this example, they merit consideration by serious designers.

Finally, the best indicator of how well a Yagi works is undoubtedly its radiation pattern. YGO3 plots on-screen E-plane patterns. Screen captures for runs 1-4 appear below in Figures 1-4, respectively. These are standard polar pattern plots annotated with key performance parameters. After YGO3 is finished, the designer can run YGO3PLOT.EXE stand-alone to view any of the NEC input files that were saved to disk.

***23-Element, Design #2***: The second design takes a different approach, a brute force approach. FoM coefficients are chosen based on experience, and a

| | | | ----- FoM Coefficients ----- | | | | | | | | | |
|---|---|---|---|---|---|---|---|---|---|---|---|---|
| Run | Chromos | Gens | a | b | c | d | e | f | G | SWR | L | FR |
| 1 | 50 | 50 | 10 | 100 | 1.8 | 0 | 10 | 0 | 5.5 | 1.51 | 5.86 | 17.7 |
| 2 | 50 | 100 | 100 | 50 | 2.0 | 0 | 10 | 0 | 14.8 | 1.54 | 6.31 | 22.2 |
| 3 | 100 | 200 | 175 | 50 | 2.0 | 0 | 10 | 0 | 16.1 | 2.02 | 6.56 | 29.8 |
| 4 | 100 | 200 | 225 | 50 | 1.5 | 0 | 10 | 0 | 16.5 | 2.39 | 6.56 | 41.2 |

**Table 2 : Run Parameters for 23-Element Iterative Design**

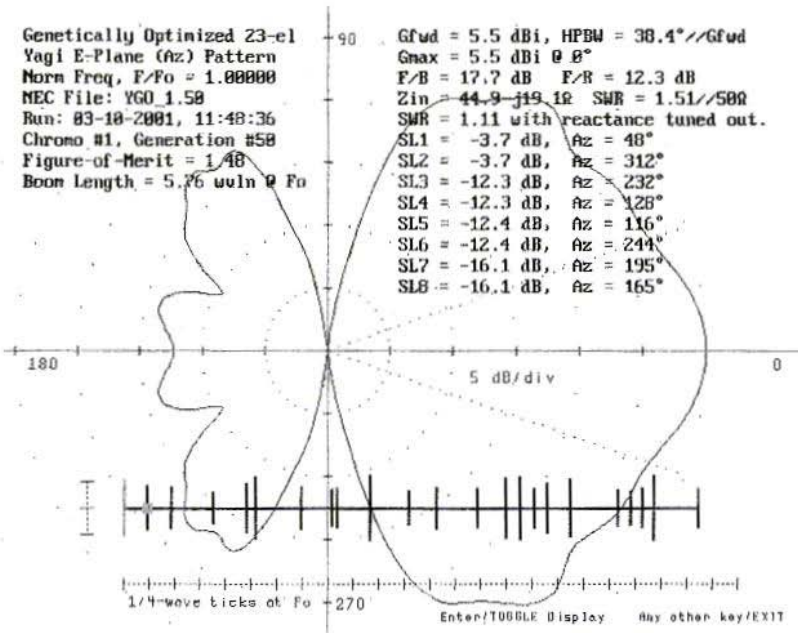


**Fig 1: Screen capture for run 1 of 23 element design #1**

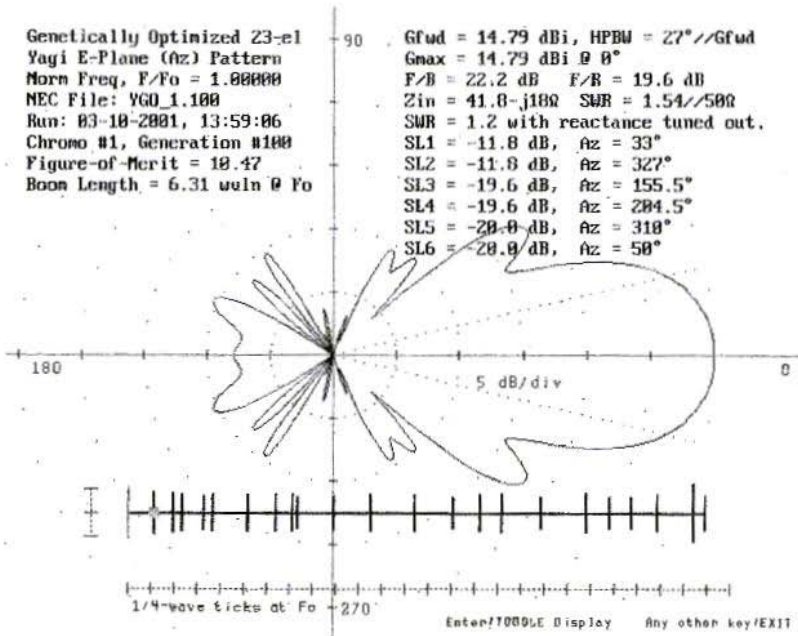


**Fig 2: Screen capture for run 2 of 23 element design #1**

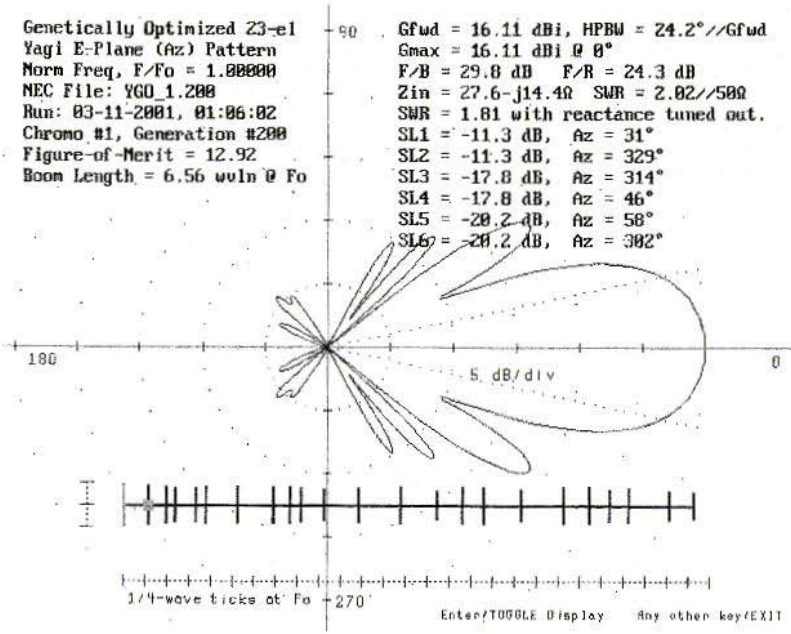


**Fig 3: Screen capture for run 3 of 23 element design #1**

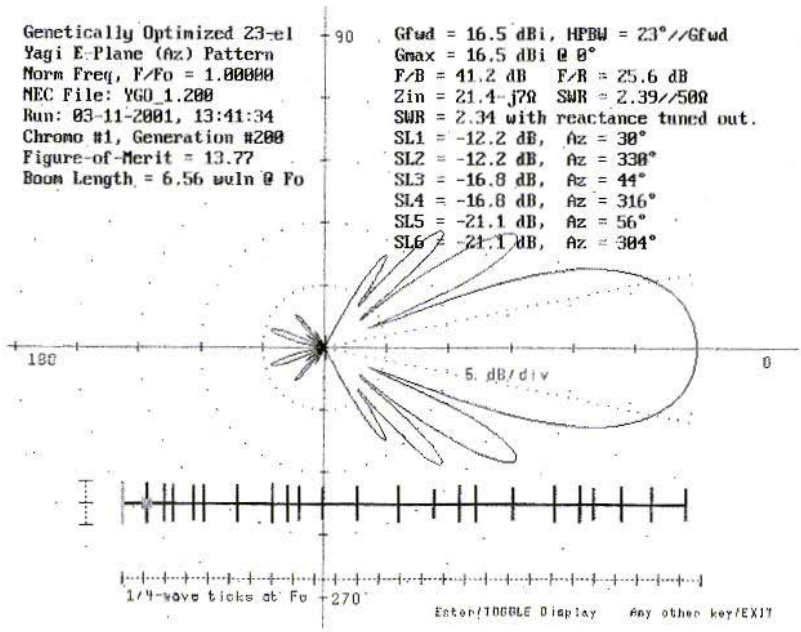


**Fig 4: Screen capture for run 4 of 23 element design #1**

very long run is made with one set of values. This design cannot be compared directly to the previous ones because there are some important differences in the run setup. Binary tournament selection was used previously, while roulette wheel was used here. Unlike the previous designs in which the element radius was always 0.00307 waves, in this example it was allowed to vary between 0.001 and 0.01 waves (min/max values of gene #2). The optimum value determined by YGO3 was 0.00611 waves, corresponding to a 1 inch diameter at Fo=144 Mhz (previously 145 Mhz). For other run parameters, the default YGO3.CFG values were used.

As the number of array elements increases, it is important to increase both the population size and number of generations, especially the number of generations. For a 23-element array, a minimum population size of, say, 100 evolved for at least 250 generations is perhaps a reasonable starting point. Too few generations will definitely result in sub-optimal designs. In this example, a population of 150 was evolved for 300 generations with no seed chromosome.

The FoM1 coefficients were **a**=150, **b**=50, **c**=2, d=0, **e**=10, and **f**=0. The resulting Yagi pattern is shown in Figure 5. The optimized array has 17.97 dBi gain with an excellent FR of 27 dB. Compared to the previous best design, this array is longer at 7.14 waves (which accounts for the increased gain); and its SWR is higher at 3.42. The input resistance of 16 ohms, however, is easily matched using a step-up balun [6], which would result in a very low SWR. Even though the balun introduces losses, there will almost certainly be a net increase in gain.

So, the question now is, which of the two Yagis is better? The answer depends, of course, on what requirements

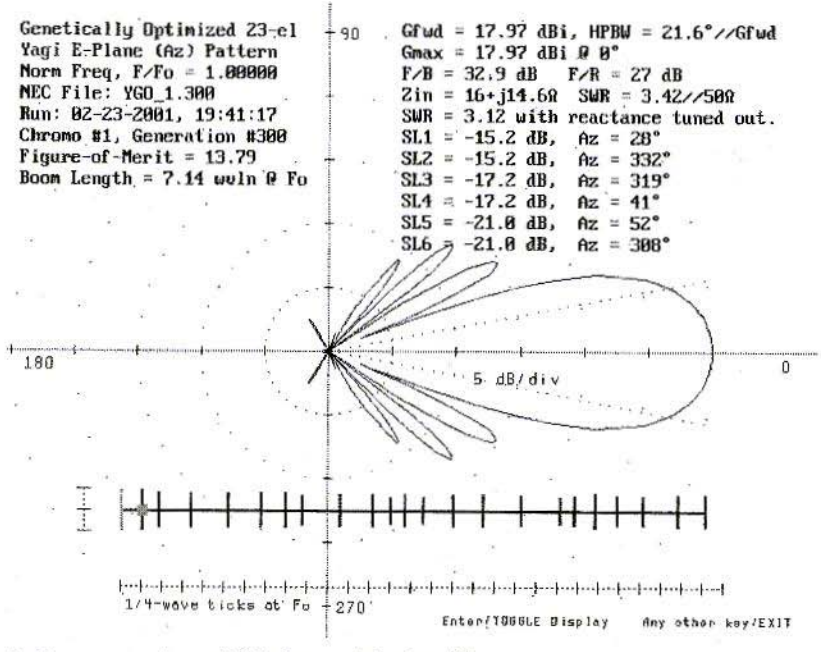


**Fig 5: Screen capture of 23 element design #2**

are imposed on the antenna. For example, if the array is to be used for weak signal work, usually EME mode, then the FB may be the key parameter because of the critical need to minimize extraneous noise pick-up from terrestrial sources. Design #1 has an FB of 41.2 dB, compared to 32.9 dB for design #2. It is conceivable Design #1s SNR would, in fact, be better than Design #2s, even though its forward gain is lower. Even within a single run, this type of trade-off analysis illustrates one of the GAs most attractive characteristics, namely, that groups of optimized designs are produced rather than just one best design.

## 5.

## Conclusion

YGO3 can generate optimized Yagi arrays that are not discoverable by any other method. Given the range of competing factors in choosing the right Yagi, genetic algorithms like YGO3 provide tremendous flexibility unavailable in traditional optimization methods. This flexibility comes at the expense of somewhat longer run times and perhaps more complicated set-up. But the results are usually well worth the effort, not to mention that experimenting with GAs is fun!

## 6.

## Bibliography

[1] NEC-2D is available from the Applied Computational Electromagnetics Society (ACES), Attn: Dr. Richard Adler, ACES Executive Officer, ECE Department, Code ECAB, Naval Postgraduate School, 833 Dyer Road, Room 437, Monterey, CA 93943-5121 USA. NEC-2 download files (source code and manuals) are also available on the web at:
.html.

[2] Haupt, R. L., & Haupt, S. E., "Optimum Population Size and Mutation Rate for a Simple Real Genetic Algorithm that Optimizes Array Factors", ACES (Applied Computational Electromagnetics) Society Journal, 15, 2, July, 2000, p.94.

[3] Beng-Kiong, & Lu, Yilong, "Array Failure Correction with a Genetic Algorithm", IEEE Transactions on Antennas and Propagation, 47, 5, May, 1999, p. 823.

[4] Linden, D. S., & MacMillan, R., "Increasing Genetic Algorithm Efficiency for Wire Antenna Design Using Clustering", ACES (Applied Computational Electromagnetics) Society Journal, 15, 2, July, 2000, p.75.

[5] Table 1, page 11-11, and Fig. 12, page, 11-10, ***The ARRL Antenna Book***, 17th Edition, R. Dean Straw, Editor, American Radio Relay League, Newington, CT 06111, 1994.

[6] ***Transmission Line Transformers***, 2nd Edition, Jerry Sevick, W2FMI, American Radio Relay League, Newington, CT 06111, 1990.

## 7.

## General References

"Design of Yagi-Uda Antennas Using Genetic Algorithms", E. A. Jones and W. T. Joines, IEEE Transactions on Antennas and Propagation, Vol. 45, No.

9, September 1997, page 1386.

"Genetic Algorithms in Engineering Electromagnetics", J. Michael Johnson and Yahya Rahmat-Samii, Antennas and Propagation Magazine (IEEE), Vol. 39, No. 4, August 1997, page 7.

"Yagi Antenna Design Using a Genetic Algorithm", Edward E. Altshuler, Derek S. Linden, and Richard A. Wing, Communications Quarterly Magazine (CQ Communications, Inc., Hicksville, NY), Vol. 8, No. 1, Winter 1998, page 11.

"Genetic Algorithm Optimization Applied to Electromagnetics: A Review", D. S. Weile and E. Michielssen, IEEE Transactions on Antennas and Propagation, Vol. 45, #3,

March 1997, page 343.

"Antennae Exotica: Genetics Breeds Better Antennas", Nathan Cohen, N1IR, Communications Quarterly (CQ Communications, Inc., Hicksville, NY), Fall 1996, page 55.

"Design of a Loaded Monopole Having Hemispherical Coverage Using a Genetic Algorithm", E. E. Altshuler and D. S. Linden, IEEE Transactions on Antennas and Propagation, Vol. 45, #1, January 1997, page 1.

**Amateur Television Quarterly**

Great articles on :
ATV
BALLOONING
PROJECTS
SSTV
ATV ACTIVITIES

VISA
M/C
AMEX

**OSCAR Satellite Report**

A great NEWSLETTER published twice a month to keep you up to date on what is happening. Sent FIRST CLASS MAIL!

**Write or check webpage TODAY for more information!**

Published by Harlan Technologies
5931 Alma Dr., Rockford, Illinois 61108 USA
http://www.hampubs.com

*Wolfgang Schneider, DJ8 ES*

# Digital Speech Store

## Instructions And Improvements To The Article In Issue 2/2001

A component value is given wrongly in the circuit diagram (Fig. 2) on Page 88 in the original article.

The value for the resistance at pin 19 of IC 2 is given as 470 Ohms, whereas the correct value is 470 kOhms!

The corrected circuit diagram is shown in Fig. 1.

The value was given correctly as 470 kOhms in the components drawing, but the resistor must be soldered to earth on one side, as shown in Fig. 2.

Programmed microcontrollers are available, see the list on the back cover of this magazine.

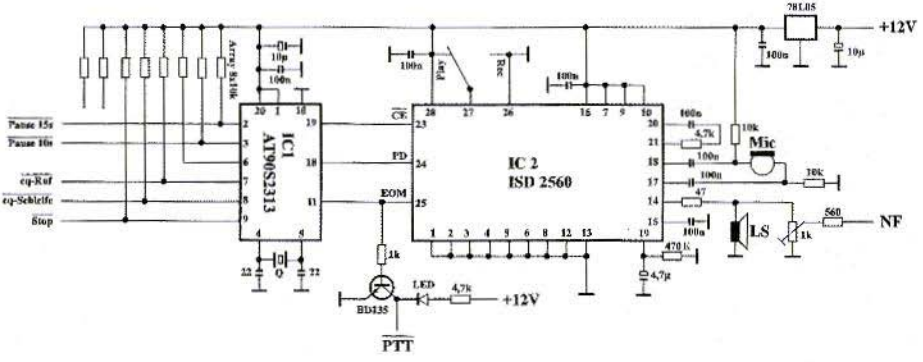


**Fig 1 : Revised circuit diagram**

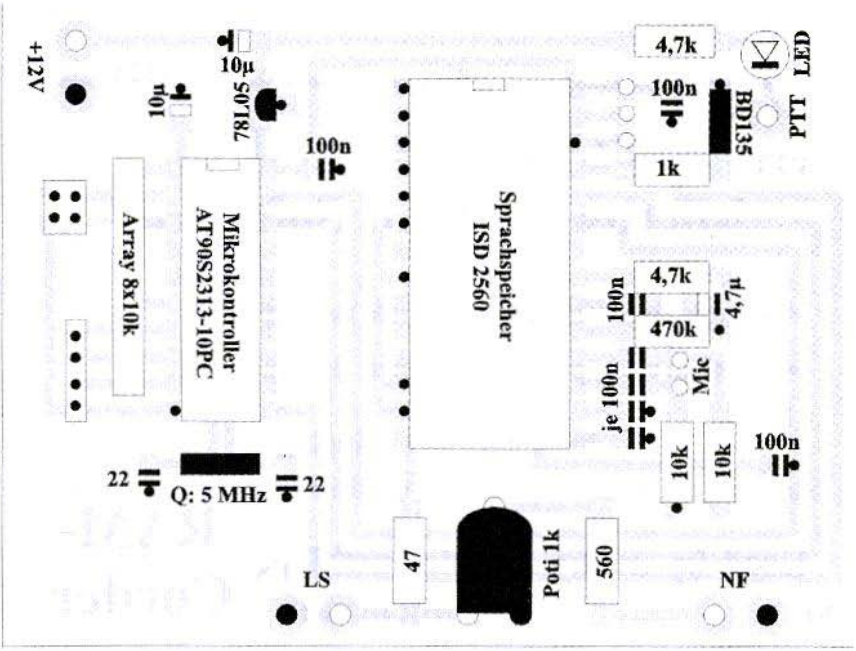

## The UK Six Metre Group

**With over 1000 members world-wide, the UK Six Metre Group is the world's largest organisation devoted to 50MHz. The ambition of the group, through the medium of its 60-page quarterly newsletter 'Six News' and through it's web site www.uksmg.org, is to provide the best information available on all aspects of the band: including DX news and reports,beacon news, propagation & technical articles, six-metre equipment reviews, DXpedition news and technical articles.**

**Why not join the UKSMG and give us a try? For more information, contact the secretary Iain Philipps G0RDI, 24 Acres End, Amersham, Buckinghamshire HP7 9DZ, UK or visit the web site.**

# PUFF version 2.1
# Microwave CAD Software

- Complete with full handbook in English
- Software supplied on 3.5 inch floppy disc

Price £23.50 + shipping
Shipping - UK £1.50, Surface mail £3.00, Air mail £5.00

## Used by many articles published in VHF Communications

# Visit the VHF Web Site - http://www.vhfcomm.co.uk

- Text of some past article.
- List of all overseas agents.
- Secure form to subscribe and order back issues or kits.
- Full index of VHF Communications from 1969 to the current issue, this can be searched on line or downloaded.
- Up to date list of back issues available.
- Links to other sites including all of those from the Internet Treasure Trove articles.
- Downloads for some articles including YGO3 the Yagi design program featured in this issue.

*Dipl.-Ing. Michael Hein, DK5FI*

# Line Sections As Capacitances Or Inductances In Microwave Range

**Appropriate technical implementation of inductances (L) and capacitances (C) is of the greatest importance in the microwave range. The article below is intended to show how starting from the elementary line theory equation we arrive at known conductor structures, and what conditions should be maintained for this.**

## 1. Supplement to Earlier Design

Supplementary notes to Design and realisation of microwave circuits Part 6 (VHF Communications, issue 4/1998, pages 194 - 209)

In [1], G.Kraus, DG8GB, demonstrates that at microwave frequencies, because of the low values required, inductances and capacitances are no longer created discretely as coil and capacitor, but can created using line sections with characteristic impedances different from the normal impedances. He starts from the formulae

$$\frac{\ell_C}{\lambda} = fCZ_e \quad \text{and} \quad \frac{\ell_L}{\lambda} = \frac{fL}{Z_L} \qquad (1)$$

and recommends that we should aim for short line sections, by selecting high values for $Z_L$ (inductance) and / or low values for $Z_C$ (capacitance), in order to avoid scatter resonances. This is not quite correct, as the rest of the article shows, as he needs to make numerous corrections to the lengths. However, there is another reason for the corrections, as shown by a detailed analysis of his example on pp. 195/196. For the required

$$|Y_{C1}| = \frac{1}{51.37\Omega}$$

we obtain, with the value of

$$\frac{\ell_{C1}}{\lambda} = 0.03097$$

specified using equation (1), the input impedance, $Z_E$ (direction of source $R_0$ seen) as [2]

$$Z_E = Z_C \frac{\frac{Z_0}{Z_C} + j\tan\beta\ell}{1 + j\frac{Z_0}{Z_C}\tan\beta\ell} \qquad (2)$$

With

$$\beta\ell = \frac{2\pi\ell_{C1}}{\lambda} = 0.1945$$

we obtain

$$Y_E = \frac{1}{48.2\Omega} + j\frac{1}{53\Omega}$$

So for the specified $\ell_{C1}/\lambda$ , we therefore already have a noticeable transformation of the real part of 50Ω (source) to 48.2Ω , and the imaginary part (capacitor) amounts to 1/53Ω , instead of the 1/51.37Ω desired. In the same way, for the required

$$|X_{L2}| = 68.85\Omega$$

using the value of

$$\frac{\ell_{L2}}{\lambda} = 0.08088$$

determined by means of equation (1), we obtain the input impedance, ZE (direction of source $R_0$ seen without $C_1$) as

$$Z_E = (62.85 + j62.3)\Omega$$

Likewise, noticeable transformations of the real part of 50Ω (source) to 62.85Ω and of the imaginary part (coil) to 62.3Ω instead of 68.85Ω . So corrections are necessary. But what is the real reason?

For an exact analysis see the appendix which demonstrates that equation (1) gives only rough approximations, although to a certain extent they are very practical. As long as the conditions:

$\tan^2 \beta\ell \ll 1$ $\quad \left(\frac{Z_C}{Z_L}\right)^2 \ll 1$ $\quad$ for $Z_C < Z_0$

and

$\tan^2 \beta\ell \ll 1$ $\quad \left(\frac{Z_0}{Z_L}\right) \ll 1$ $\quad$ for $Z_L > Z_0$

are fulfilled, equation (1) is even (almost) precise. A line section with $Z_C < Z_0$ turns into a shunt capacitance, and one with $Z_L > Z_0$ into a series inductance. And this is just ideally suited to creating filter structures, the component values of which can be comfortably taken from the catalogues of standardised filters.

But the approximations now bring it about that, when a required inductance, L, or a capacitance, C, is to be created (e.g. from the filter catalogue), the lengths of the line sections, $\ell_L$ and / or $\ell_C$ turn out to be too low as regards s regards capacitance (electric conductance too low) and too low as regards inductance (too little resistance). The decisive correction factor here is

$$\left[1 - \left(\frac{Z_C}{Z_0}\right)^2\right]$$

for the capacitance, and / or

$$\left[1 - \left(\frac{Z_0}{Z_L}\right)^2\right]$$

for the inductance.

For calibration, the lengths $\ell$ are to be multiplied by the reciprocal values. In addition, a real part transformation takes place through the $\tan^2\beta\ell$ approximation, with the essential factor

$$\left(1 + \tan^2(\beta\ell)\right)$$

and / or

$$\left(\frac{1}{1 + \tan^2(\beta\ell)}\right)$$

So for L, $R > Z_0$, and for C, $R < Z_0$. It is therefore expedient, as far as possible,

that the impedance level extremes (e.g. 140 Ω and 10Ω ) are selected for $Z_L$ and $Z_C$, for in this way ß€ remains as low as possible, and thus the approximation remains valid.

If we now combine L and C, then we arrive at the filter structures, as mentioned earlier. These are automatically all low-pass (Fig. 1). This makes the circumstances essentially more complicated, and we then have to make corrections, as acknowledged by G.Kraus, DG8GB [1].

This is where the strength of modern computer programs lies, for they can implement practically any number of corrections and iteration steps in an extremely short time. But it is all too easy to forget the basic inter-connections (or we simply don't know what they are). But they are indispensable if we want a deeper effective understanding of things. Thus we may consider whether it might not be more expedient instead of going the long way round using discrete elements and filter catalogues, and needing to make numerous corrections to dimension filters directly in accordance with the wave parameters $Z_L$ and ß€. This also works, and has already been done before [3]. For example, the low-pass filter for transmission high-level stages [4] described decades ago in VHF Communications and in Rothammel is a filter of this nature.

It is also conceivable to implement L and C as stubs. Here we have an open stub, for the electric conductance of which

$$Y_E = j\frac{\tan(\beta\ell)}{Z_L}$$

a capacitance represents an inductance in a short-circuited stub, with the impedance level

$$Z_E = jZ_L \tan(\beta\ell)$$

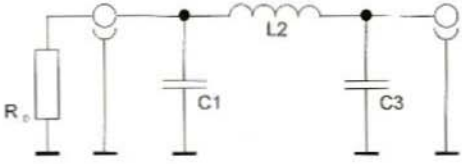


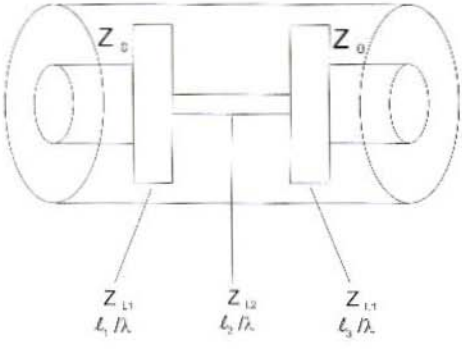

$$\frac{\ell_1}{\lambda} \approx f \cdot C_1 \cdot Z_{L1}$$

$$\frac{\ell_2}{\lambda} = f \cdot \frac{L_2}{Z_{L2}}$$

$$\frac{\ell_3}{\lambda} = f \cdot C_3 \cdot Z_{L3}$$

$Z_{L1,3}$ : practically ≥ 10Ω (microstrip)
≥ 4Ω (Coaxial)

$Z_{L2}$ : practically ≤ 150Ω (microstrip)

$\ell_{1,2,3}$ : ≤ λ/20

**Fig. 1: Low-pass with line sections**

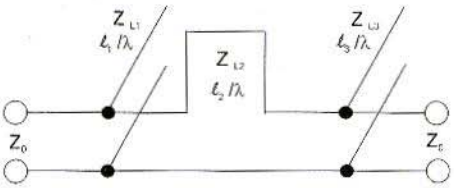


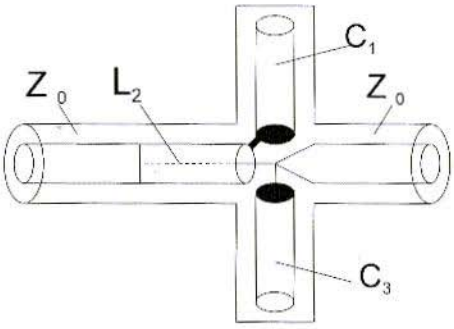


$Z_0$ : z.b. 13/30 (60Ω)
L : z.B. 1/10 (135Ω)
C : z.B. 13/16 (12Ω)

**Fig. 2: Low-pass with stubs**

It is expedient here to select $Z_L$ extreme so that $\ell$ remains constant and the resonances lie far enough away. The advantage is that both high-pass and low-pass structures are possible. The disadvantage is that the implementation can take place only using coaxial technology. Fig. 2 shows an example. In practise, this technique has certainly achieved no essential significance.

## 2. Literature References

[1] G.Kraus, DG8GB: Design and realistaion of microwave circuits,VHF Communications, issue 4/1998, pages 194 - 209.

[2] Zinke / Brunswig: High-frequency technology textbook, vol. 1, p. 50, Springer Verlag, Berlin, 1973

[3] Anon.: Wave parameter filters: programmed instruction. Darmstadt Technical College, 1975 (unpublished)

[4] H J Dohlus, DJ3OC : Coaxial low-pass filter for VHF and UHF, VHF Communications, issue 3/1970, pp. 166 - 178.

## Appendix

### Line sections with $Z_L \neq Z_0$ using line sections as capacitance or inductance of a filter

For the lossless line ($Z_L$, ß$\ell$) terminated by $Z_0$, the following applies to the input impedance $Z_E$

$$Z_E = Z_L \frac{\frac{Z_0}{Z_L} + j \tan \beta\ell}{1 + j \frac{Z_0}{Z_L} \tan \beta\ell} = \frac{Z_0 + jZ_L \tan \beta\ell}{1 + j \frac{Z_0}{Z_L} \tan \beta\ell}$$

Suppose that $Z_L < Z_0$

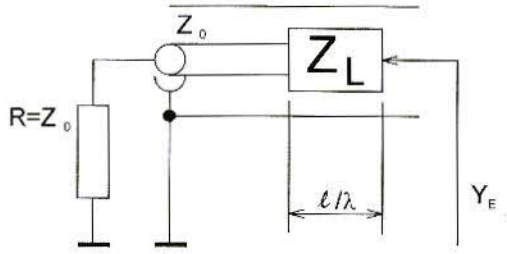


$$\beta = 2\pi/\lambda$$
$$c_0 = f\,\lambda$$

$$\boxed{Z_L < Z_0}$$

$$Y_E = \frac{1}{Z_E} = \frac{1 + j\frac{Z_0}{Z_L}\tan\beta\ell}{Z_0 + jZ_L\tan\beta\ell} = \frac{\left(1 + j\frac{Z_0}{Z_L}\tan\beta\ell\right)\left(Z_0 - jZ_L\tan\beta\ell\right)}{Z_0^2 + Z_L^2\tan^2\beta\ell} = \frac{Z_0\left(1+\tan^2\beta\ell\right) + j\tan\beta\ell\left(\frac{Z_0^2}{Z_L} - Z_L\right)}{Z_0^2\left(1 + \frac{Z_L^2}{Z_0^2}\tan^2\beta\ell\right)}$$

$$= \frac{1+\tan^2\beta\ell}{Z_0\left[\left(\frac{Z_L}{Z_0}\right)^2\left(1+\tan^2\beta\ell\right) - \left(\frac{Z_L}{Z_0}\right)^2 + 1\right]} + j\frac{\tan\beta\ell}{Z_L}\left(\frac{1 - \left(\frac{Z_L}{Z_0}\right)^2}{\left(1+\tan^2\beta\ell\right)\left(\frac{Z_L}{Z_0}\right)^2 - \left(\frac{Z_L}{Z_0}\right)^2 + 1}\right)$$

As long as it is true that $\tan^2\beta\ell << 1$ (for $\beta\ell < 0.3$ with < 7% error) with $\tan\beta\ell \approx \beta\ell$ (3% error) it follows that

$$Y_E \approx \frac{1}{Z_0} + j\frac{\beta\ell}{Z_L}\left(1 - \left(\frac{Z_L}{Z_0}\right)^2\right)$$

$Y_E$ corresponds to the electric conductance of a capacitor parallel to $Z_0 = R$, with capacitance given by

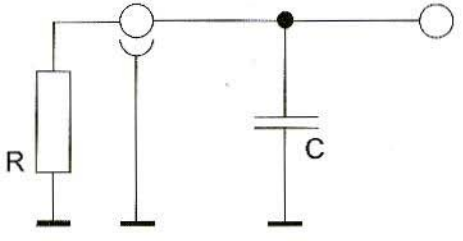


$$j\omega C = j\frac{\beta\ell}{Z_L}\left(1 - \left(\frac{Z_L}{Z_0}\right)^2\right)$$

$$C = \frac{\ell}{C_0 Z_L}\left(1 - \left(\frac{Z_L}{Z_0}\right)^2\right)$$

If it is true that $(Z_L/Z_0)^2 << 1$ (for $Z_L \leq Z_0/3$ with $\leq 10\%$ error) it follows that

$$C \approx \frac{\ell}{C_0 Z_L} = \frac{\frac{\ell}{\lambda}}{f Z_L}$$

So as long as it is true that $\tan^2\beta\ell << 1$ and $(Z_L/Z_0)^2 << 1$ the line section corresponds to a parallel-wired constant capacitance independent of $Z_0$

---

Now suppose that $Z_L > Z_0$

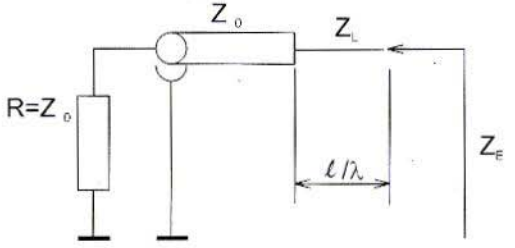


$$\boxed{Z_L > Z_0} \qquad \beta = 2\pi/\lambda \quad c_0 = f\lambda$$

$$Z_E = \frac{(Z_0 + jZ_L \tan\beta\ell)\left(1 - j\frac{Z_0}{Z_L}\tan\beta\ell\right)}{1 + \frac{Z_0^2}{Z_L^2}\tan\beta\ell} = \frac{Z_0(1+\tan^2\beta\ell) + j\tan\beta\ell\left(Z_L - \frac{Z_0^2}{Z_L}\right)}{1 + \frac{Z_0^2}{Z_L^2}\tan^2\beta\ell}$$

$$= Z_0 \frac{1+\tan^2\beta\ell}{(1+\tan^2\beta\ell)\left(\frac{Z_0}{Z_L}\right)^2 - \left(\frac{Z_0}{Z_L}\right)^2 + 1} + j\tan\beta\ell Z_L \frac{\left(1 - \frac{Z_0^2}{Z_L^2}\right)}{(1+\tan^2\beta\ell)\left(\frac{Z_0^2}{Z_L^2}\right) - \left(\frac{Z_0}{Z_L}\right)^2 + 1}$$

As long as it is true that $\tan^2\beta\ell << 1$ (for $\beta\ell < 0.3$ with $< 7\%$ error) with $\tan\beta\ell \approx \beta\ell$ (3% error) it follows that

$$Z_E \approx Z_0 + j\beta\ell Z_L\left(1 - \left(\frac{Z_0}{Z_L}\right)^2\right)$$

$Z_E$ corresponds to a coil in series with $Z_0 = R$ with inductance given by

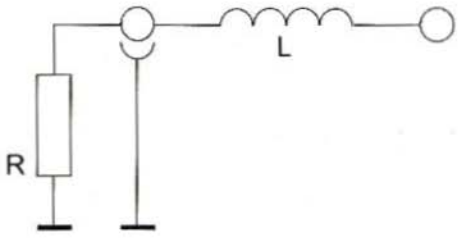


$$j\omega\ell = j\beta\ell Z_L\left(1-\left(\frac{Z_0}{Z_L}\right)^2\right)$$

$$L = \frac{\ell}{C_0}Z_L\left(1-\left(\frac{Z_0}{Z_L}\right)^2\right)$$

If it is true that $(Z_L/Z_0)^2 << 1$ (for $Z_L > 3\ Z_0$ with $\leq 10\%$ error) it follows that

$$L \approx \frac{\ell}{C_0}Z_L = \frac{Z_L}{f}\cdot\frac{\ell}{\lambda}$$

So as long as it is true that $\tan^2\beta\ell << 1$ and $(Z_L/Z_0)^2 << 1$ the line section corresponds to a series-wired constant inductance independent of $Z_0$

*Gunthard Kraus, DG8GB*

# An Interesting Program

## PCAAD21.zip - An Antenna Analysis Program

**This issue sees the introduction of a new feature entitled An Interesting Program. Against the background of the inexhaustible source provided by the Internet, these articles will be introducing and describing programs covering interesting areas.**

**A short thumbnail sketch will list all the characteristics which are important for the user, including how the program can be obtained. In the second section, its operation is described and its application is demonstrated through practical examples.**

### 1.

### Short Thumbnail Sketch

**Name:** PCAAD21

**Area of application:**

a) Analysis of individual antennas (dipole, dipole RCS, folding dipole, Yagi)

b) Design of a logarithmic-periodic antenna

c) Analysis of antenna arrays (linear array, planar array, grating lobe, finite and infinite dipole array)

d) Analysis of microstrip antennas (rectangular and circular patch, aperture coupled patch)

e) Analysis of aperture antennas (E-plane and H-plane sectoral horns, pyramidal horn, conical horn, corrugated conical horn, parabolic reflector)

f) Analysis of transmission lines and wave guides (microstrip, stripline, coaxial line, two-wire line, rectangular waveguide, surface waveguide)

**File type and file size:**

Packed DOS program (zipped) with 161 kilobytes, in unpacked condition 360 kilobytes

No problems have been detected while operating with WIN 95/98 and using a fast computer

No bugs or gross computational errors have been detected so far

**User-friendliness:**

Easy to understand and familiarise oneself with. Operation by means of simple pull-down menus; computation in metric units. Very practical structure.

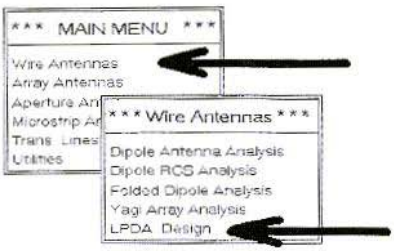


**Fig. 1: Program start for design of a logarithmic periodic antenna**

**On-line help:** None

**How to get it:**

a) Download from homepage of RFGlobalnet (http://www.rfglobal-net.com)

b) Link in VHF Commuinicatios Site Links -

**Improvements needed:**

Graphics output of directional diagrams still works in very old-fashioned way and should be brought up to Windows level. On-line help would be of practical use.

## 2.

## Working With Pcaad21

From the thumbnail sketch and the application areas listed there, it will be immediately recognised that this program can be used to analyse, review and optimise ones own antenna designs. In principle, we enter the dimensions of

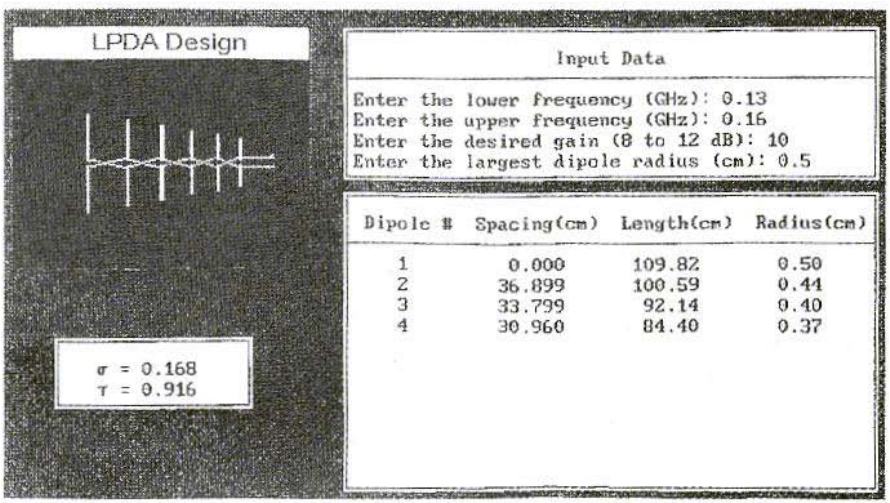


**Fig. 2: The lower table now contains all dimensions and spacing intervals for the individual LPDA antenna elements. The left-hand, longest dipole in the array is represented by the number 1**

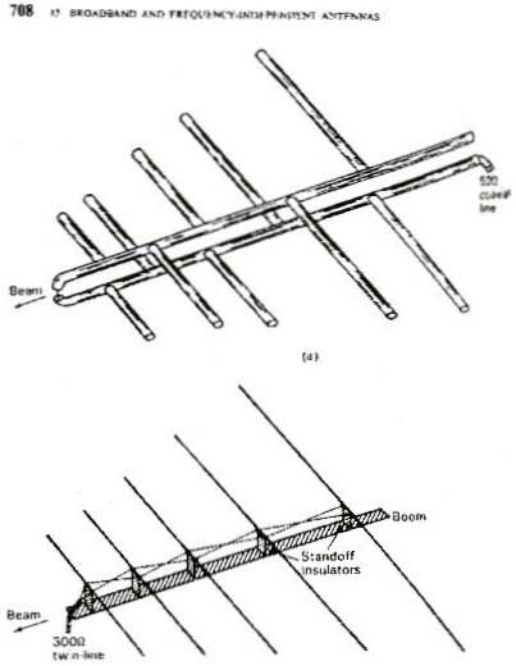


**Fig. 3: This diagram is from the book [1]. It supplies comprehensive information and gives the necessary theoretical background.**

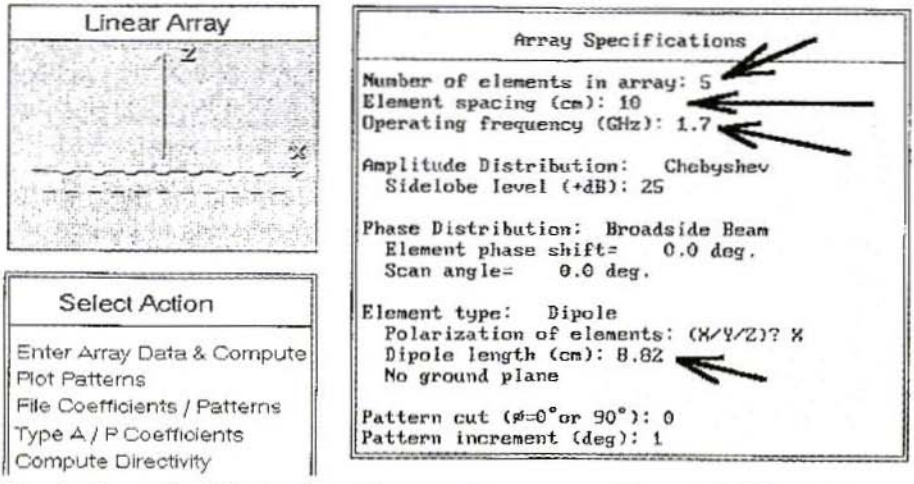


**Fig. 4: Example of design for a linear antenna array. The required inputs are marked with arrows. In the field Select action, select the next step to be taken.**

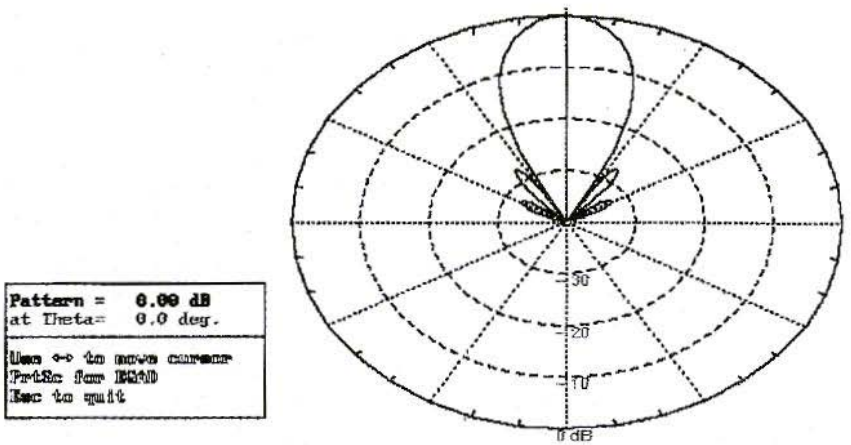


**Fig. 5: This polar diagram shows the design when Plot Pattern is called up. Unfortunately, the graphics representation is not up to normal quality of more modern software.**

the selected type of antenna and have its associated electrical characteristics calculated.

For installation, copy the software into its own directory on the hard disc and unpack it.

To start the PCAAD21 program, enter PCAAD21 and press Enter. The various application areas of the program will be displayed for you by the main menu on the screen.

Let us now go through a design from the first group. To this end, use the mouse to click on Wire Antennas (Fig. 1). Then unpack the bottom example (LPDA Design) and as an exercise design a logarithmic-periodic antenna for the frequency range from 130 MHz to 160 MHz. Then, in addition to the 2-m. amateur radio band, you can also receive NOOA weather satellite signals or any other kind of radio service.

And its so simple (see Fig. 2).

a) Key in low-end frequency (0.13 GHz)

b) Key in high-end cut-off frequency (0.16 GHz)

c) Enter desired gain (here 10 dB)

d) Select the radius of the longest antenna element (e.g. 0.5 cm.)

The complete antenna design is displayed in the bottom left-hand half of the window, with all mechanical dimensions and intervals. Mind you, you will need to be very familiar with the principle and the characteristics of the designed antennas, as there are no instructions for mechanical assembly or any clarifications of any kind concerning the abbreviations listed or the sizes displayed using Greek formula letters.

Many people will therefore just stand there not knowing what to do. The only thing which will help is to obtain appropriate technical literature and look

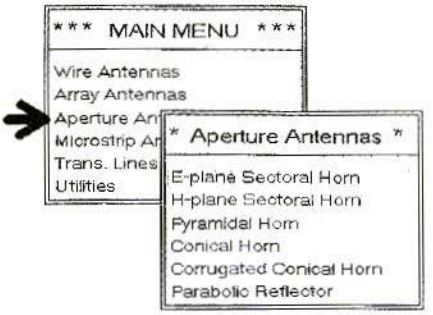


**Fig. 6: Selection menu for typical, normal microwave aperture antennas. Making a selection can be a little difficult for non-specialists at first...**

things up, or else familiarise yourself with the subject. As regards nearly all questions relating to antennas, or the search for the theoretical background, the book referred to in [1] helped me along, so I can recommend it to any ambitious antenna developer. That's where you'll find Fig. 3, if its a question of the mechanical assembly of the LPDA and its wiring.

By contrast, anyone working on array antennas will be pleased to see that Array Antennas is the next item on the menu. Fig. 4 is intended to show the design of a Linear Array (all antennas side by side in a line, like fence posts). 5 half-wave dipoles have been selected for the frequency 1.7 GHz, the interval between the individual elements is 10 cm., and the dipole length selected is a half wavelength (8.86 cm.). The program will ask you very precise questions about every detail of the design before taking you on to the point where you can finally call up the Plot Pattern option and look at Fig. 5.

Next, we should take a somewhat closer look at the menu with the Aperture Antennas (Fig. 6). Since some of the antenna forms are completely unknown, we again turned to the same technical book. And lo and behold, it has another helpful chapter [2] and one specific illustration (see Fig. 7) turned out to be very informative.

Another tip if you want to find some examples to familiarise yourself with the program, look for complete parabola or horn antenna designs, e.g., from articles in back numbers of VHF Communications (with their dimension data) and duplicate a similar component. This is a very good way for you to get used to the material, as gross divergences between the simulation result and the dimensional values already in existence are normally due to a faulty entry or a misconception on the part of the program user. Its usually then a question of time and persistence until you can work out fully all the inter-relationships.

The next menu (Fig. 8) takes you to the design options for patch antennas.

From the three options listed, we again selected the design for a rectangular patch for the Meteosat frequency 1.7 GHz. The way things go here is that you enter the length and width of the patch, the position of the feed point, and all necessary printed circuit board data, and in reply you will see the resonating frequency displayed, together with the input resistance at the feed point (Fig. 9). It is now up to the user to optimise the design by repeating the process several times with altered data. Click on the appropriate additional menu items, and PCAAD will finally calculate the directivity (the relationship between the peak value of the Poynting vector in the direction of maximum radiation and its mean value) and the directional diagram for the E-field and the H-field (Fig. 10).

Another little comment on the degrees of accuracy obtainable experience and measurements indicate that the resonating frequency can be accurately determined to within approximately 3%. For

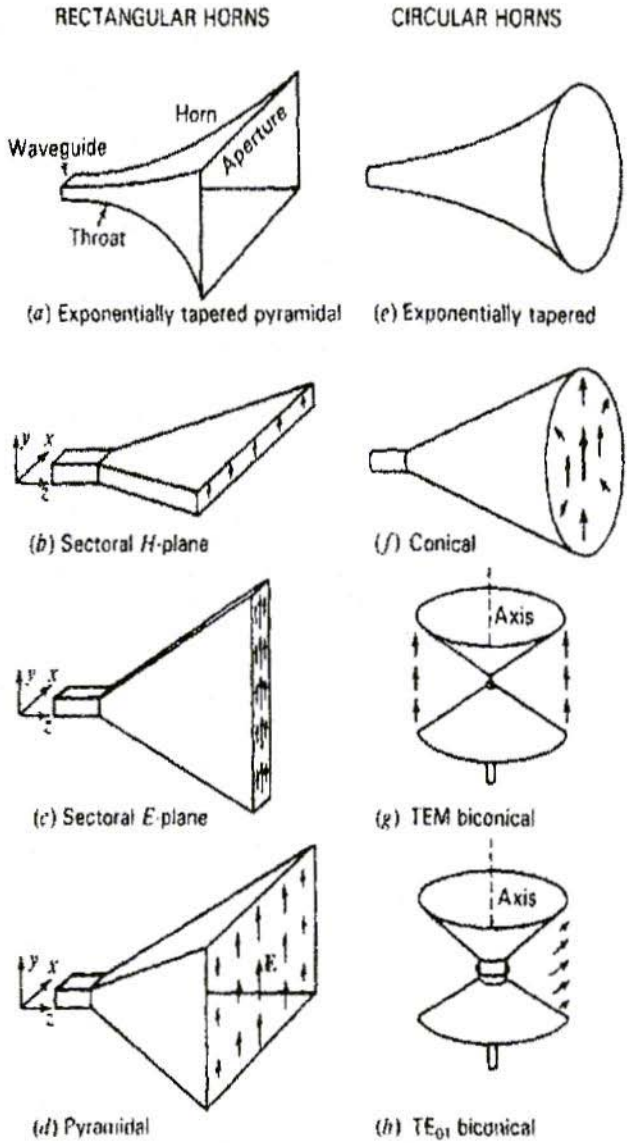


**Figure 13-20** Types of rectangular and circular horn antennas. Arrows indicate E-field directions

**Fig. 7: Helpful chart showing aperture antennas from [2]**

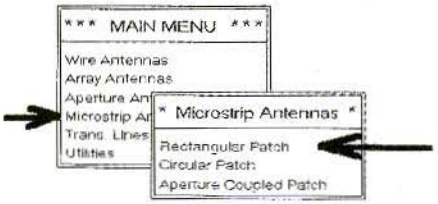


**Fig. 8: Steps in design of rectangular patch antenna**

the radiation resistance, by contrast (since the line losses of the patch are unfortunately not fully and precisely included), divergencies between 10 and 20% could arise, depending on the printed circuit board material.

Finally we come to the last menu item, which can be used to investigate high-frequency circuits of all types, including wave guides (Fig. 11). Microstrip calculations are probably needed most frequently nowadays, and here we can choose from the following options:

a) Calculation of characteristic impedance of an ideal microstrip if the dimensions and board data are entered

b) Determination of required width if a specific characteristic impedance is to be implemented for a pre-set board

c) Complete and correct modelling of a microstrip with all frequency dependencies. This enables us to investigate the characteristic impedance and the attenuation for a specific frequency and / or its frequency dependencies, using the dimensions and board data (note: this case is

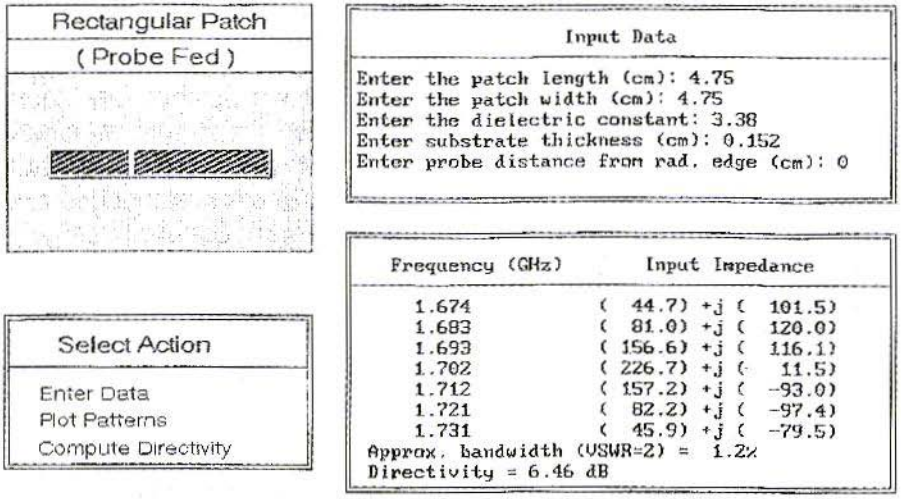


**Fig. 9: Frequency / impedance table for selected feed point (microstrip feed). The natural resonance can be clearly recognised on the smallest reactive component at 1,702 MHz; the directivity is 6.46 dBi**

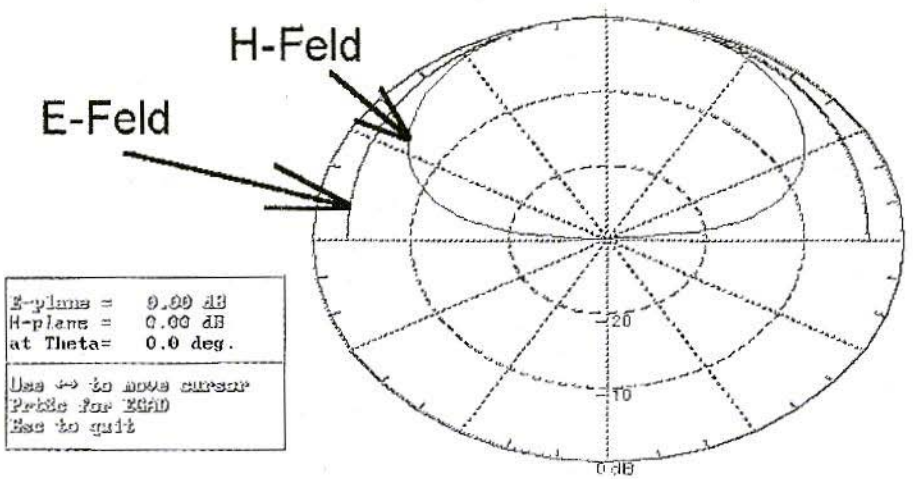


**Fig. 10: It takes only a click on the mouse to calculate the directivity and display it**

known from Puff, if the exclamation mark is placed behind the transmission line description)

Thus, in Fig. 12, the necessary conductor width for a 50-Ohm circuit, with a printed circuit board 1.52 mm. thick made from the new Rogers material R04003 (r = 3.38, loss factor = 0.001 at 2 GHz) has been determined at 3.52 mm.. In Fig. 13, a check is made on the same board (using complete modelling) as to whether the same impedance level of 50 Ohms should be selected again for the same dimensions with the same frequency. This is luckily the case, and a test simulation using Puff likewise gives the same values.

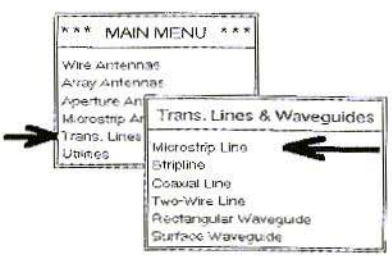


**Fig. 11: How to open the design menu for microstrip lines**

In conclusion, let us also show the analysis of an air-filled wave guide (Fig. 14). With a width of 2 cm. and a height of 1 cm., if we enter Operating frequency 10 GHz, the PC initially provides us with a list of the most important modes, together with each individual cut-off frequency. If a specific mode can arise with the operating case selected, then the third table value provides the associated propagation constants for this in radians / meter. If we press Enter and continue with the program, then when the dielectric and

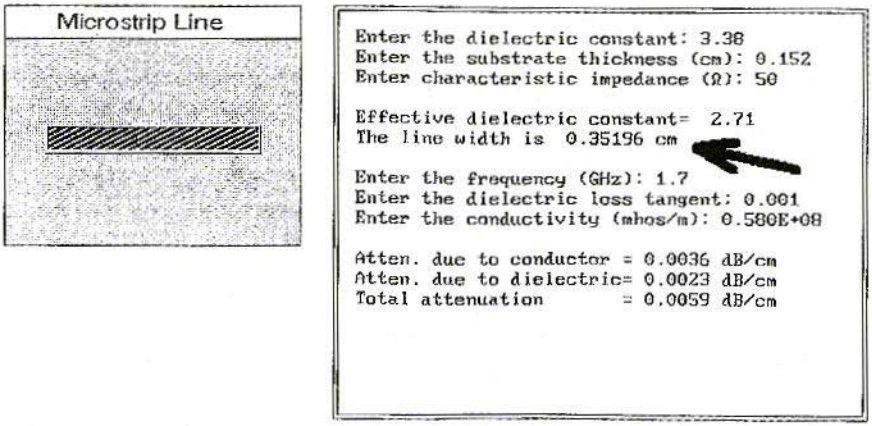


**Fig. 12: Printed circuit board data and characteristic impedance are given. We are looking for the line width. This width is given for f = 1.7 GHz, together with the individual attenuation values (conductor / dielectric / total loss)**

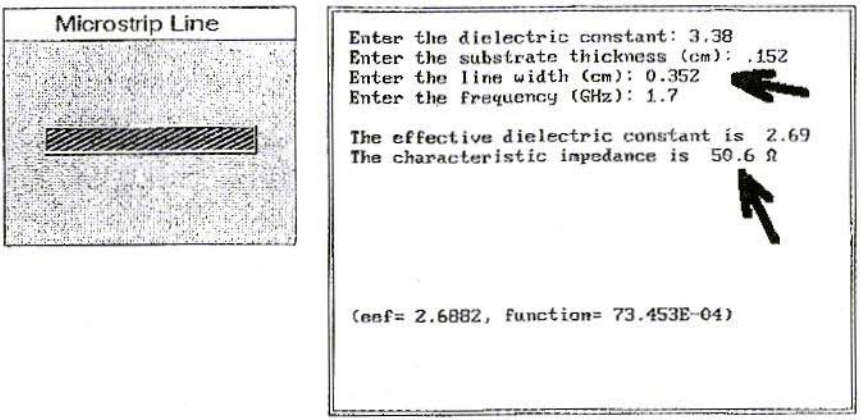


**Fig. 13: Second practical case: the printed circuit board data and the line width are known. We are looking for the characteristic impedance at a specific frequency.**

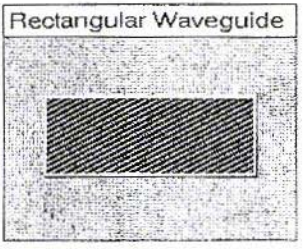


```
Enter the waveguide width (cm): 2
Enter the waveguide height (cm): 1
Enter the dielectric constant: 1
Enter the frequency (GHz): 10

Mode     fc (GHz)     ß (rad/m)
1 , 0      7.500        138.53
2 , 0     15.000       cut-off
0 , 1     15.000       cut-off
1 , 1     16.771       cut-off
0 , 2     30.000       cut-off

Enter the dielectric loss tangent: 0.0001
Enter the conductivity (mhos/m): 0.580E+08

Atten. due to conductor = 0.0014 dB/cm
Atten. due to dielectric= 0.0014 dB/cm
Total attenuation       = 0.0028 dB/cm
```

**Fig. 14: Investigation of an HL profile, 1 cm. x 2 cm. at 10 GHz. The list of possible modifications can already be recognised, with the cutoff frequencies and the associated propagation constants. The attenuation constants apply for the material and dielectric used at f = 10 GHz**

the line data have been entered the individual attenuation fractions and the overall attenuation are given in dB / meter.

**On balance:**

We have not listed all the options for PCAAD21, only the most important ones. Once you begin to get used to it, it is a very useful aid to designing or testing specific forms of antenna and its still (?) almost free, into the bargain.

## 3. Literature

[1] John D.Kraus, Antennas, McGraw-Hill International Editions 1988, Page 708. ISBN 0-07-100482-3

[2] John D.Kraus, Antennas, Page 644

*Matjaz Vidmar, S53MV*

# An improved BPSK for the 1.2Mbit/s RTX

## 1. PSK demodulator design and performance

Efficient data transmission requires efficient modulation and demodulation techniques, both for terrestrial radio links and for satellite communications. Unfortunately, most amateur transmissions still use rather inefficient FSK modulation. Although an incoherent FM transceiver may look simpler than a coherent PSK transceiver, the practical implementation of either design is equally demanding.

Coherent PSK becomes really necessary at data rates above about 100kbit/s, where the power and spectral inefficiency of incoherent FSK severely limits the performance even for short-range terrestrial links. The simpliest form of coherent PSK is Biphase-PSK or BPSK. The latter is very suitable for amateur packet-radio links.

Coherent BPSK was successfully tested already a few years ago in 1.2Mbit/s packet-radio links as described in [1]. The only disadvantage were relatively complicated 13cm BPSK transceivers, as described in [3] or [5]. In fact only the double-conversion 13cm BPSK receiver is complicated and requires lots of shielding and a complicated tuning procedure. On the other hand, it is always possible to design a direct-modulation BPSK transmitter without any frequency conversions or other complicated signal processing. The receiver radio-frequency hardware can be much simplified using a Zero-IF design as shown on figure 1. On the other hand, a Zero-IF receiver requires more complex IF signal processing. Since the latter is performed at relatively low frequencies, it only requires simple and inexpensive hardware.

BPSK or QPSK demodulation simply requires an additional phasor rotation to compensate for the frequency and phase offset of the receiver local oscillator.

A very successful 23cm Zero-IF BPSK transceiver design for 1.2Mbit/s was presented in [2], [4], [6] or [7]. This transceiver uses a Costas-loop BPSK demodulator. The phasor rotation is acheived with a pair of rotating, analog CMOS switches, while the feedback loop is built as a digital PLL, as shown on figure 2. This design results in inexpensive and highly reproducible hardware with no tuning points.

The measured bit-error rate performance of the described demodulator is compared to the theoretical performance of

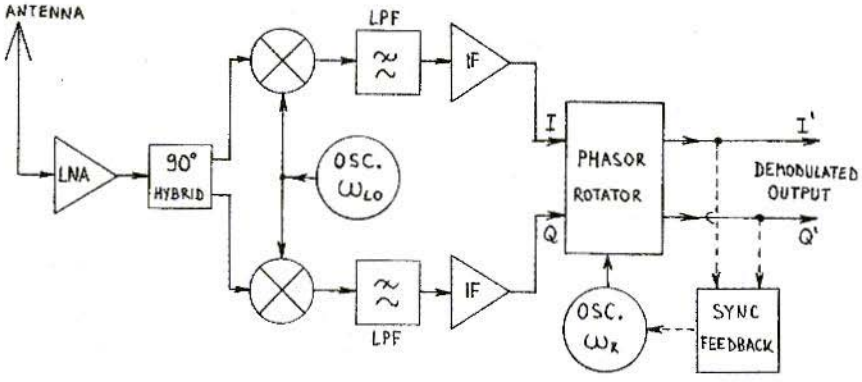


**Figure 1 - Zero-IF receiver block diagram.**

a BPSK demodulator on figure 3. The performance loss amounts to about 3...4dB and has many sources. About 0.7dB loss is caused by rotating the phasor in 16 discrete steps instead of a continuous phase adjustment. Less-than-ideal IF filtering accounts for at least 1dB of performance loss. Additional performance loss is caused by the switching transients caused by the analog CMOS switches and the non-ideal IF frequency repsonse: the IQ dual IF amplifier can not be DC coupled for many practical reasons. The effects of the latter are particularly noticeable with longer pseudo-random test sequences. With long test sequences, the performance of the demodulator may be even worse than shown on figure 3 in the particular case when the receiver LO frequency matches the transmitter frequency within a few kHz. In this particular case, the rotating switches toggle between two neigbour positions most of the time thus increasing the effects of switching glitches. The IF

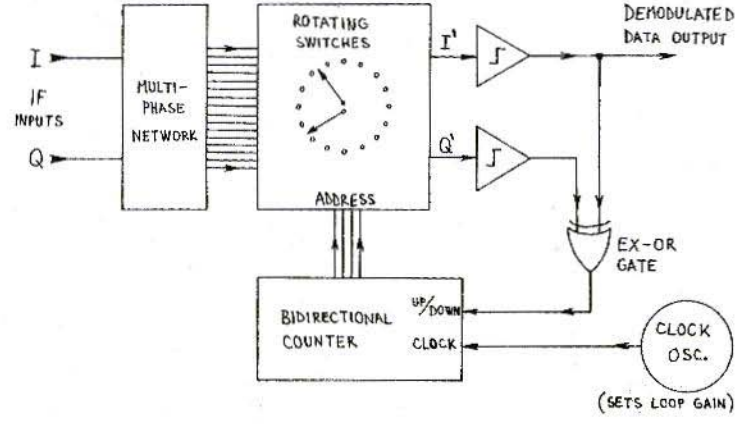


**Figure 2 - Costas-loop BPSK demodulator with rotating switches.**

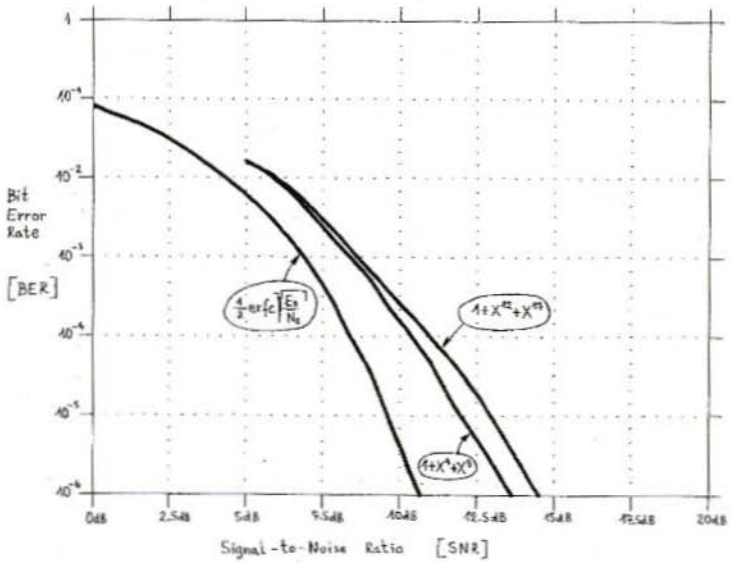


**Figure 3 - Measured BPSK demodulator performance.**

signal itself includes an increased DC component, corrupted by the AC-coupled dual IF amplifier.

In this article, an improved BPSK demodulator is described that is completely compatible with the 23cm BPSK transceiver from [2], [4], [6] or [7]. The new demodulator completely solves the problem of switching transients and requires a lower gain IF amplifier, thus reducing the signal distortion. Finally, the new demodulator actually requires less components resulting in a simplier and cheaper circuit.

## 2.

## Improved BPSK demodulator

The operation of the new BPSK demodulator is also based on a phasor rotator with rotating switches with a block diagram similar to figure 2. The main difference from figure 2 is that the multiphase network drives a number of limiting amplifiers. The rotating switches are digital selectors and the switching transients can be removed easily with D-flip-flops. A phasor rotation in 16 discrete steps requires 16 limiting amplifiers and 16-position switches. The actual hardware can be much simplified by considering that the second group of 8 limiting amplifiers provides just an inverted replica of the signals from the first group of 8 limiting amplifiers. Therefore just 8 limiting amplifiers are required in the practical implementation, followed by 8-position switches and finally EXOR gates to flip the phase of the signals when required.

The analog part of the new BPSK demodulator is shown on figure 4. The IF signals I and Q and their inverted replicas, AC coupled from the dual IF amplifier, drive a resistor network. Eight LM311 comparators are used as limiting amplifiers. Taps on the resistor network are selected to obtain eight signals with phases of 0, 22.5, 45, 67.5, 90, 112.5, 135 and 157.5 degrees.

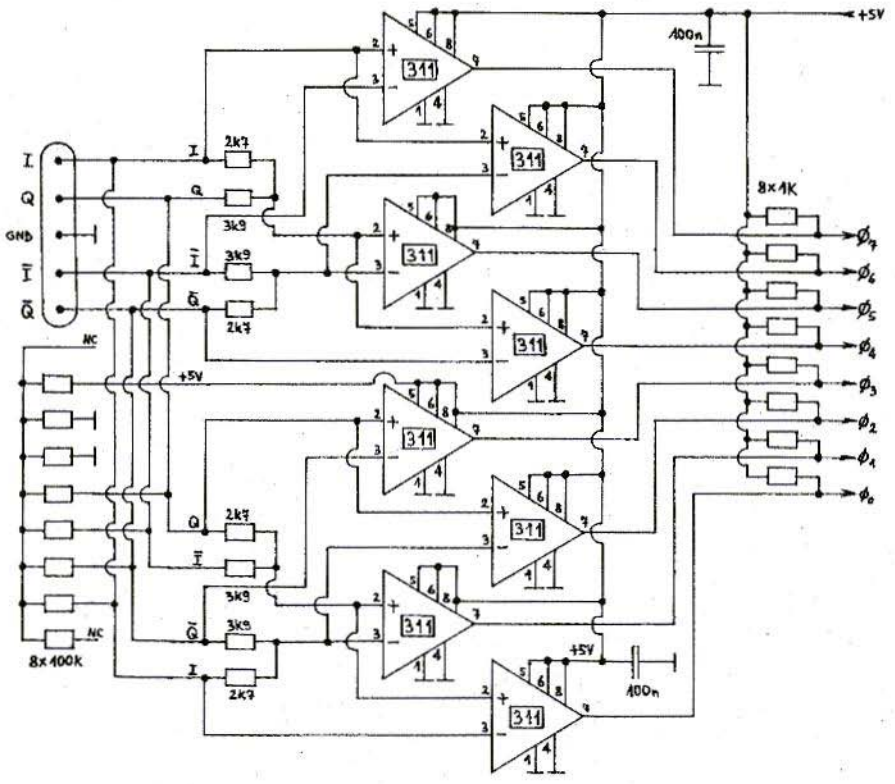


**Figure 4 - Analog part of the demodulator: 8-phase limiting IF.**

The digital part of the new BPSK modulator is shown on figure 5. Two 74HC151 multiplexers are used as rotating switches, operated with an offset of 90 degrees. The output signal phase can be futher flipped with EXOR gates (74HC86 pins 1,2,3 and 4,5,6) before the switching glitches are removed with the 74HC174 D-flip-flops. An EXOR gate (74HC86 pins 11,12,13) is also used to perform the signal multiplication, required for the feedback in a Costas loop. The bidirectional counter is identical to the one used in the old BPSK demodulator and is built with two 74HC191 devices. The overall circuit was found to operate reliably up to clock frequencies of 20MHz. Since any switching glitches are completely removed by the D-flip-flops, the actual clock frequency can be increased from 6.144MHz to 14.3MHz, resulting in an increase of the carrier capture range from +/-24kHz up to about +/-56kHz.

The new BPSK demodulator is built on a double-sided printed-circuit board with the dimensions of 60mmX120mm.

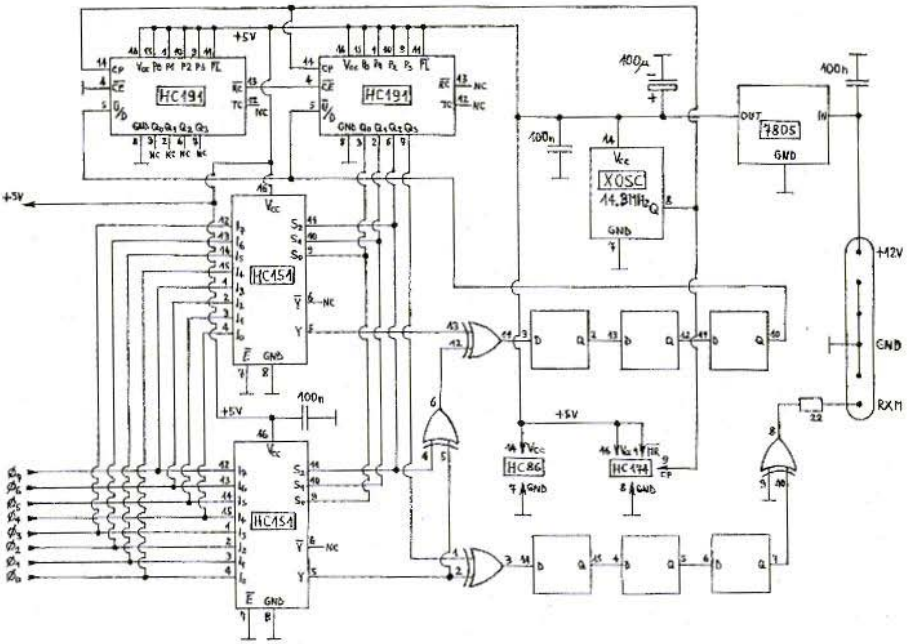


**Figure 5 - Digital part of the demodulator: digital Costas loop.**

The component (top) side of the printed-circuit board is shown on figure 6 while the solder (bottom) side is shown on figure 7. The corresponding component location is shown on figure 8. The new BPSK demodulator has exactly the same dimensions and same electrical connections as the old one thus allowing a direct replacement of the old circuit. Besides removing switching transients, the new demodulator has a much improved input sensitivity and dynamic range. The new demodulator will operate without any performance degradation with the input signals in the range from 30mVpp up to 3Vpp, corresponding to a dynamic range of 40dB. On the other hand, the old BPSK demodulator with the 74HC4067 analog switches required signals between 1Vpp and 3Vpp, corresponding to a dynamic range of only 10dB.

## 3.

## Modification of the Zero-IF amplifier

The new BPSK demodulator on its own does not bring much improvement to the receiver performance, since most of the signal degradation occurs in the IQ dual IF amplifier. Thanks to its improved sensitivity and dynamic range, the new BPSK demodulator requires less gain in the IF strip and has much released AGC requirements. Of course,

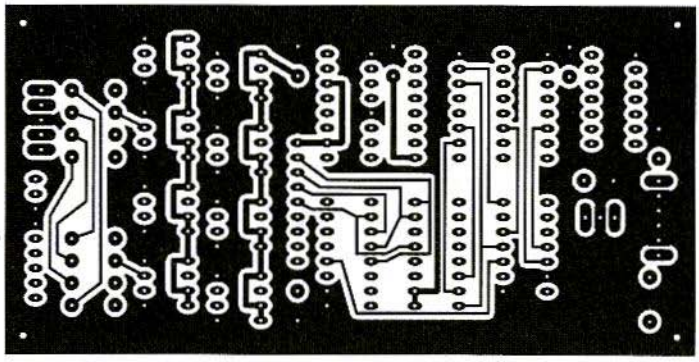

Figure 6 - Demodulator printed-circuit board, componet side.

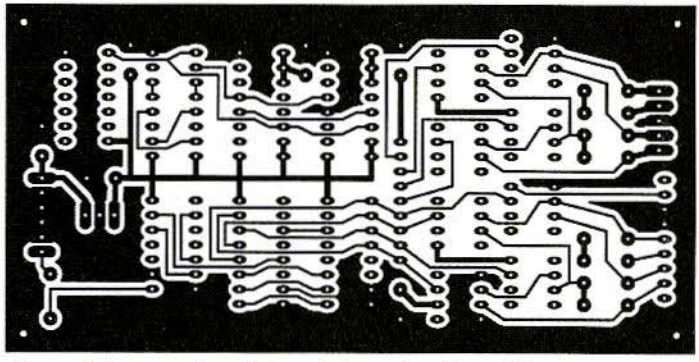

Figure 7 - Demodulator printed-cirucit board, solder side.

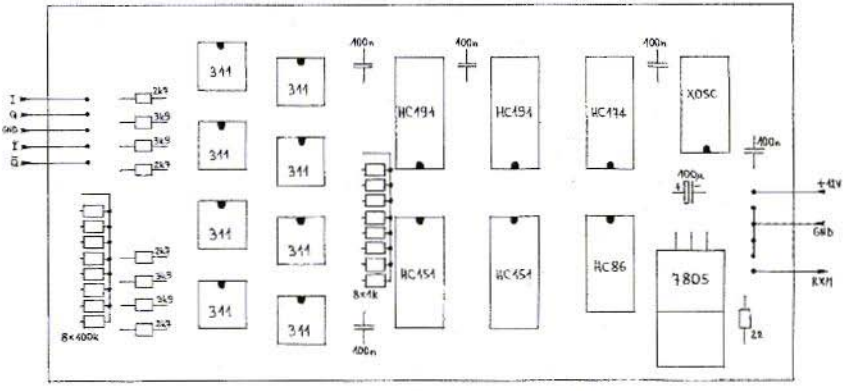


Figure 8 - Demodulator component location.

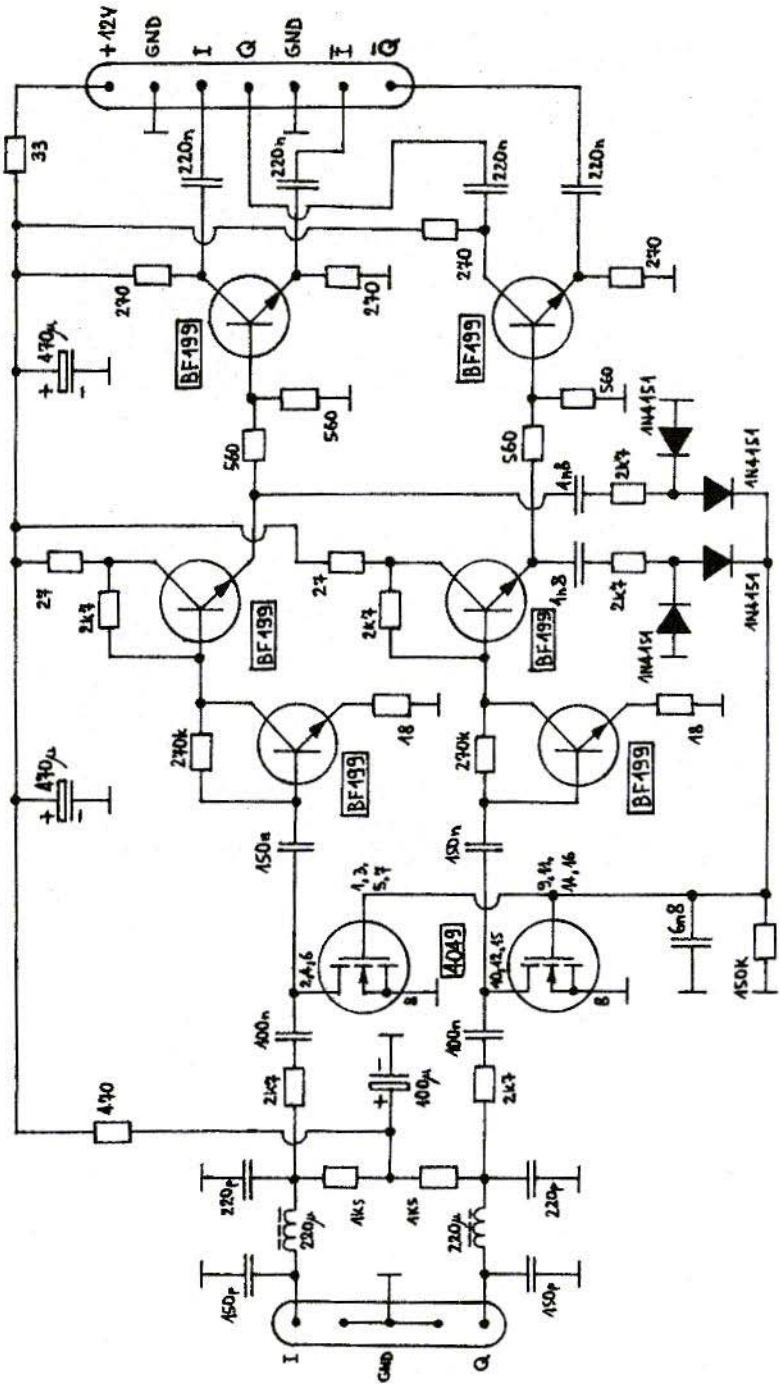
+12V
GND
I
Q
GND
Ī
Q̄
33
220n
270
BF199
560
470µ
1N4151
1n8
2k7
27
18
270k
150n
4049
6n8
150K
100n
100µ
470
220p
220µ
1K5
150p
GND

the IQ dual IF amplifier has to be modified or better completely rebuilt to make use of the improved demodulator. The simplest solution is to modify the original IF amplifier as shown on figure 9. The original amplifier has three dual stages, while the new demodulator only requires a single dual IF amplifier stage with a common AGC. Thanks to the improved dynamic range of the demodulator, the AGC remains inactive at low signal levels thus minimizing the signal distortion.

The modified IQ dual IF amplifier can be built on the same printed-circuit board as presented in the original article [2], [4], [6] or [7]. Of course, only the components of first stage are installed, while the second and the third stage are simply bridged to the output symmetrical drivers. The values of some components are changed too. In particular the power-supply decoupling must be improved due to the lower signal levels required by the new BPSK demodulator.

A better solution is to redesign the IQ dual IF amplifier as shown on figure 10. The latter uses two NE592 (or two uA733) video amplifiers that already have symmetric outputs as required by the BPSK demodulator. The new IQ dual IF amplifier is equipped with a faster AGC detector. The AGC voltage is made available on the output connector to drive a high-impedance (>50kohm) S-meter. The latter is useful during transceiver checkout or troubleshooting.

The new IQ dual IF amplifier is built on a single-sided printed-circuit board with the dimensions of 40mmX120mm as shown on figure 11. The corresponding component location is shown on figure 12. The new printed-circit board has the same length, but it is narrower than the old IF board. The electrical connectors are wired in the same way as in the old version, except for allocating an unused ground pin for the S-meter output.

Finally, it is recommended to apply some small modifications also to the quadrature IQ mixer module of the receiver, in particular to the input coupling of both IF preamplifiers. For clarity, figure 13 shows the modification of one of the two IF preamplifiers. First, the two quarter-wavelength chokes L19 and L20 on the original circuit diagram should be replaced with 47uH chokes to improve the rejection of out-of-band signals. Second, the coupling capacitors should be decreased from 4.7uF down to just 1uF to speed-up the receiver recovery after an input overload.

## 4.

## Practical applications of the BPSK radios

The described Zero-IF strip and BPSK demodulator represent a further improvement to the already successful BPSK megabit packet-radio transceiver. Besides the improved performance, the modules shown on figures 14 and 15 also feature a reduced circuit complexity and component count. Both modules were also tested succesfully in a 13cm version of the Zero-IF BPSK transceiver to be published in a future article.

In order to increase the throughput of a packet-radio network, besides increasing the transmission speed it is also necessary to increase the frame length beyond the standard limit of 256 bytes. The current choice is 1500 bytes to transport standard IP frames without fragmentation and is already implemented in the megabit TNC shown in [8] or [9]. Longer frames are more sensitive to transmission errors. Therefore improving the demodulator performance is even more important with longer frames. If the (otherwise efficient) datagram mode is used to transmit IP frames through the AX.25 network, lost frames can only be recovered by the relatively slow TCP retries.

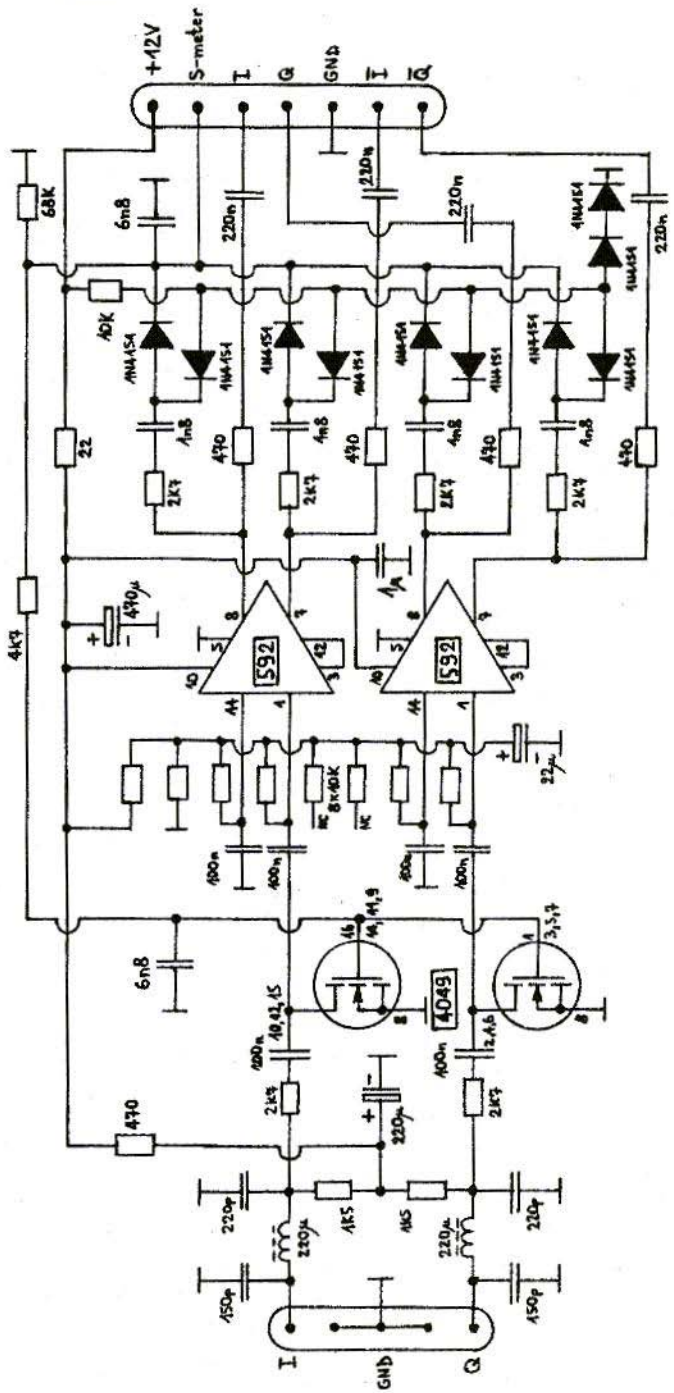


Figure 10 - New IQ dual IF amplifier.

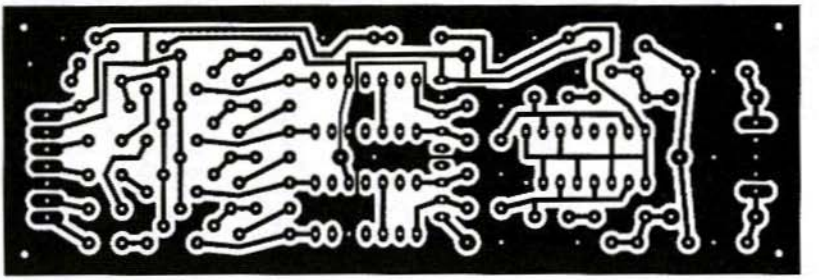

Figure 11 - New dual IF amplifier printed-circuit board.

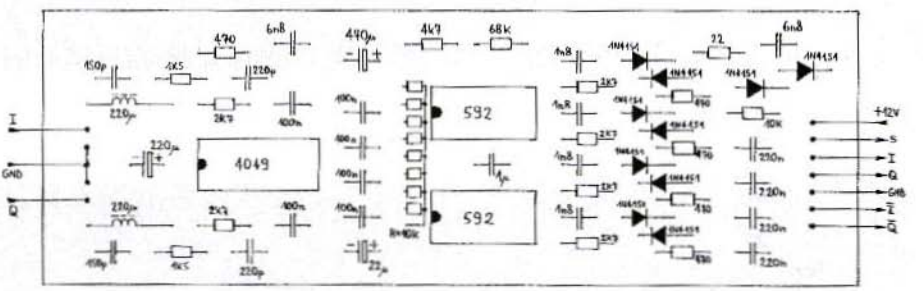


Figure 12 - New dual IF amplifier component location.

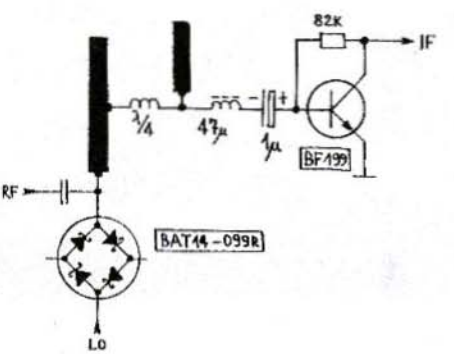


Figure 13 - Modification of the IF preamplifier.

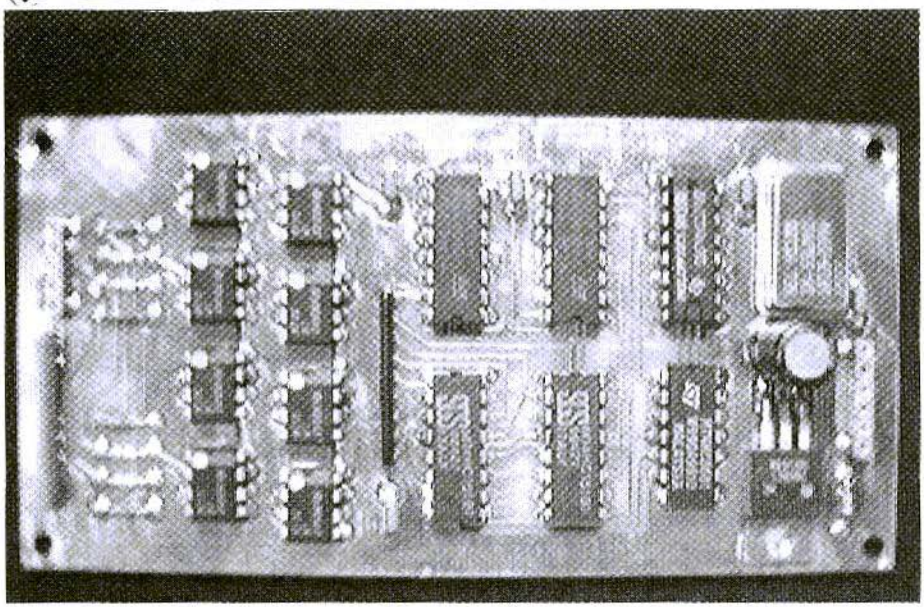

**Figure 14 - Photo of the improved PSK demodulator.**

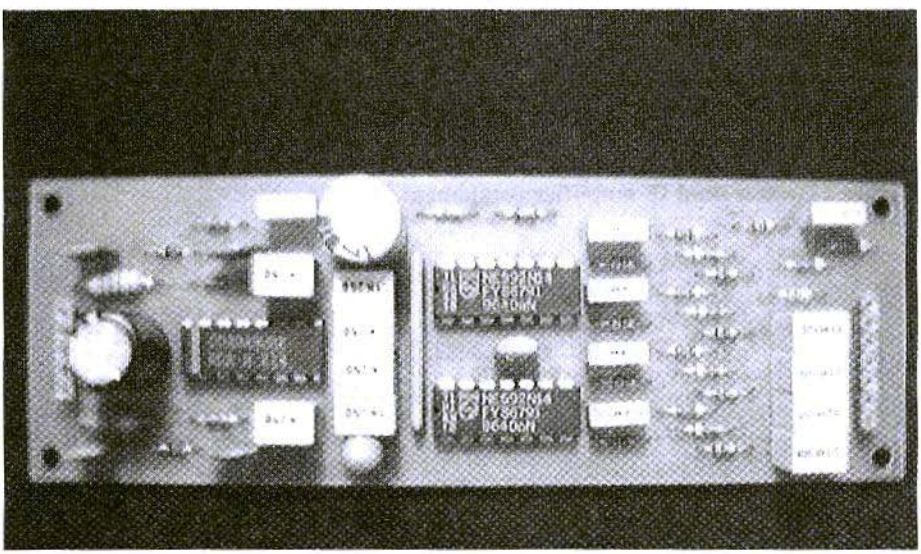

**Figure 15 - Photo of the new IQ dual IF amplifier.**

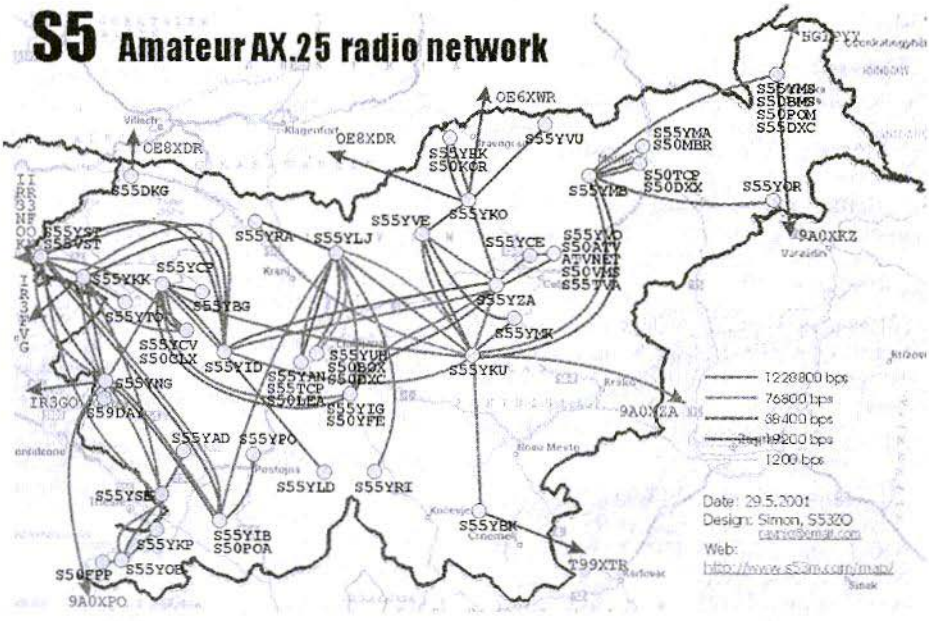


**Figure 16 - S5 amateur AX.25 radio network.**

More than one hundred 1.2Mbit/s BPSK radios for both 23cm and 13cm have been built in Slovenia, Italy and Croatia. Practically the whole Slovenian packet radio network shown on figure 16 is now based on the Zero-IF BPSK transceivers, with many more nodes in Italy and Croatia adding to the list. While upgrading the network from 256byte frames to MTU 1500, some additional margin on the radio links was required and the latter was a good reason for developing an improved BPSK demodulator.

Since the megabit packet-radio network is available, digital ATV is becoming increasingly more popular, using inexpensive "web" cameras and personal computers. In order to obtain a good-quality, live colour picture with programs like Microsoft Netmeeting, the RS-232 interface to the TNC has to be modified to at least 460kbit/s, resulting in data flows of about 30kbytes/s. With these data flows, the current packet-radio network, based on 1.2Mbit/s radios, quickly approaches congestion. One already has to think about the next step, interlinks in the 10 to 20Mbit/s range. The described BPSK demodulator could in principle work at higher speeds by using faster comparators and faster logic. The best idea is probably to burn the whole digital circuit into a field-programmable logic array. On the other hand, efficient and reliable BPSK demodulators are also required for satellite communicatons. Although the increased free-space insertion loss and tight power budget limit the data rate to less than 1Mbit/s for amateur satellites, simple and reliable hardware solutions are preferred to DSP, especially in a radiation environment like space. The described BPSK demodulator can be easily modified for lower data rates, including the 153.6kbit/s BPSK "RUDAK" output from AO-40.

## 5.

## References:

[1] Matjaz Vidmar: "1.2Mbit/s Super-Vozelj packet-radio node system", Scriptum der Vortraege, 40. Weinheimer UKW Tagung, Weinheim, Germany, 16-17 September 1995, pages 240-252.

[2] Matjaz Vidmar: "23cm PSK Packet-radio TRX for 1.2Mbit/s user access", Scriptum der Vortraege, 41. Weinheimer UKW Tagung, Weinheim, Germany, 21-22 September 1996, pages 25.1-25.15.

[3] Matjaz Vidmar: "13cm PSK Transceiver for 1.2Mbit/s Packet Radio", 15th ARRL and TAPR DIGITAL COMMUNICATIONS CONFERENCE, Seattle, Washington, USA, September 20-22, 1996, pages 145-175.

[4] Matjaz Vidmar: "23cm PSK Packet-Radio RTX for 1.2Mbit/s User Access", 15th ARRL and TAPR DIGITAL COMMUNICATIONS CONFERENCE, Seattle, Washington, USA, September 20-22, 1996, pages 176-202.

[5] Matjaz Vidmar: "13cm PSK Transceiver for 1.2Mbits/s Packet Radio", Part-1, VHF-Communications 3/1996, pages 130-147. Part-2, VHF-Communications 4/1996, pages 194-205.

[6] Matjaz Vidmar: "23-cm-Packet-Radio-Transceiver fuer 1.2-Mbit/s-Benutzerzugriffe", Part-1, AMSAT-DL Journal 3/1996, pages 42-44. Part-2, AMSAT-DL Journal 4/1996, pages 11-26.

[7] Matjaz Vidmar: "23cm PSK Packet Radio Transceiver for 1.2Mbit/s User access", VHF-Communications 2/1997, pages 74-96.

[8] Matjaz Vidmar: 'A simple TNC for megabit packet-radio links', Skriptum der Vortraege, 45. Weinheimer UKW Tagung, Weinheim, Germany, 9-10 September 2000, pages 28.1-28.19.

[9] Matjaz Vidmar: "A simple TNC for megabit packet-radio links', VHF-Communications 3/2000, pages 137-151.

*Gunthard Kraus, DG 8 GB*

# Internet Treasure Trove

## Aplac

Up in the far North, the Finns have been continually developing and improving their simulation program, and now we have version 7.6. We have already pointed out that the student version can be downloaded, together with all the documentation and manuals, from the APLAC homepage. However, if you send an E-mail and ask for the test CD, you will also receive some publicity material and a very useful application note. Using APLAC to simulate RFIC Mixers. Taking a closer look at a decidedly interesting product, we find that, not only can it simulate the standard IP point measurement with several sounds, but it even has a chapter headed Measuring Non-Linear Noise.

Naturally, due to the limitations of the student version, it can not simply be applied to investigating circuits of any size, but its certainly worth experimenting with. Operation and input procedures for this software need some getting used to, since it is a little different from the normal Windows pattern,

Address: http://www.aplac.com

## Stellex

Anyone who has anything to do with mixers, needs an SMD version quickly, or just wants information on the most recent state of the art, should just take a glance at the Stellex homepage.

The company is famous for offering the widest choice of SMD mixers and frequency doublers in the range between 10 kHz and 26 GHz.

Address:

## Sawtek

For anyone who does not yet know Sawtek: according to its own publicity, it is the right contact for anyone interested in SAW filters (surface acoustic wave filters) for all possible applications. Mostly SAW filters for the radio and mobile phone markets, and naturally in SMD formats as well. Theres always some interesting information here, which you can download as the most recent Product Brochure.

Address: http://www.sawtek.com

## Ansoft Ensemble

After Harmonica, the well-known microwave circuit simulation program, Ansoft has now also put a student version of its EM simulator, Ensemble on the Internet for testing. This can be used to analyse well-known structures such as couplers, microstrips, patch antennas, etc..

Address: http://www.ansoft.com

**Note:** Such well-known products as Sonnet, APLAC, etc. are now competing with one another for the student version market. Of course, we do not know whether all products are equally good, fast, reliable or precise. You can only test this yourself by using the different programs on a fully completed project (e.g. a patch antenna).

## Microwave Journal

The well-known trade journal has taken the trouble to post the technical articles from back numbers going back to the middle of 1997 on its homepage as the Editorial Archive a fantastic treasure trove.

There are certainly some small snags. Firstly, you have to register, giving your full user profile. Secondly, whoever is in charge has made a mistake, and so you suddenly find illustrations and diagrams are missing from many articles. Thirdly, you are offered a mixture of HTML pages, PDF files and *asp files for download, which changes from one issue to another. To make sense of this, youll need to know some tricks for downloading non-PDF format files. Any simple-minded soul who just saves an opened HTML page will wonder where all the illustrations have gone...

Heres a brief explanation of the path to follow for Netscape users:

1) Open the desired page, then mark the link (= URL and / or Internet address) and copy it into the intermediate file

2) Click on the Open page option in the File pulldown menu

3) Then copy the URL address you have just saved into the appropriate line of the screen (using <Control> + )

4) If you then switch to Composer and re-open the page, the screen is again re-structured, but this time using all the individual elements, which are connected to one another and can clearly be recognised.

5) Now go back into File, but this time select Save file it is best to save to a new folder on the hard disc, which you can quickly create

6) If you now take a look at the folder, your eyes will pop it now contains a crazy conglomeration of innumerable files

7) To inspect pages saved in this manner, use Explorer to search the folder for *html or *asp files they can then be opened quite normally using Netscape or Internet Explorer, and all the illustrations are there where they belong

Address:

## RLC

If you want to use coaxial switches in SMD format (e.g. SPDT type = single pole / double through) in your development work, you could well just take a look at this companys site. The frequency range on offer goes from DC up to 26 GHz, but there are also couplers, dividers, terminations, attenuators, DC blocks, BIAS tees, detectors, etc..

Address:

# VHF Communications Back Issues

- Most back issues available from 1969 onwards, an up to date list is maintained on the VHF Communications web site. Some difficult to obtain issues can be supplied as photocopies.
- Locate interesting articles by searching the full index on the web site, then order the magazine using the secure form.
- If you are new to VHF Communications magazine or have missed some volumes or issues, choose one of the back issue sets or individual magazines to make your collection complete.
- Keep your magazines in good condition with Blue Binders that hold 12 issues, £6.50 each + P&P
- Single issues from 1969 to 1999 £1.00 each + P&P
- Single issues from the 2000 volume £4.70 + P&P
- Complete 2000 volume £18.50 + P&P
- Back issue set 1972 to 1999 (61 magazines) £50.00 + P&P
- Back issue set 1972 to 2000 (65 magazines) £65.00 + P&P

K M Publications, 63 Ringwood Road, Luton, Beds, LU2 7BG, UK

Tel / Fax +44 1582 581051, web site

# VHF

*A Publication for the Radio Amateur Worldwide*

*Especially Covering VHF, UHF and Microwaves*

Volume No.33 Autumn Edition 2001-Q3

Publishers

KM PUBLICATIONS,
63 Ringwood Road, Luton,
LU2 7BG, United Kingdom

Tel: +44 1582 581051
Fax: +44 1582 581051

Email:
andy.@vhfcomm.co.uk

Editor

Andy Barter G8ATD

VHF *COMMUNICATIONS*

The international edition of the German publication UKW-Berichte is a quarterly amateur radio magazine, especially catering for the VHF/UHF/SHF technology. It is owned and published in the United Kingdom in Spring, Summer, Autumn and Winter by KM PUBLICATIONS.

The 2001 subscription price is £20.00, or national equivalent. Individual copies are available at £5.00, or national equivalent each. Subscriptions should be addressed to the national representative shown in the next column. Orders for individual copies of the magazine , back issues, kits, binders, or any other enquiries should be addressed directly to the publishers.

***NOTICE:*** No guarantee is given that the circuits, plans and PCB designs published are free of intellectual property rights. Commercial supply of these designs without the agreement of the Author and Publisher is not allowed. Users should also take notice of all relevant laws and regulations when designing, constructing and operating radio devices.

© KM PUBLICATIONS

All rights reserved. Reprints, translations, or extracts only with the written approval of the publishers

Translated by: Inter-Ling Services, 62 Caldecott Street, Rugby, CV21 3TH, UK

Printed in the United Kingdom by: Cramphorn Colour Printers Ltd., 15a Boughton Road Industrial Estate, Rugby CV21 1BQ, UK.

AUSTRALIA - W.I.A. South Australia Division, GPO Box 1234, Adelaide, SA 5001, Australia. Tel/Fax: 8 8522 4859

BELGIUM - UKW-BERICHTE, POB 80, D-91081 BAIERSDORF, Germany. Tel: 09133-77980. Fax: 09133-779833 Postgiro Nbg. 30445-858.

DENMARK - KM PUBLICATIONS , 63 Ringwood Road, LUTON, LU2 7BG, UK. Tel: +44 1582 581051. Fax: +44 1582 581051. Email: vhfsubs@vhfcomm.co.uk

FRANCE - Christiane Michel F5SM, Les Pillets, 89240 PARLY, France
Fax: (33) 03 86 44 08 82 Tel: (33) 03 86 44 06 91

FINLAND - KM PUBLICATIONS , 63 Ringwood Road, LUTON, LU2 7BG, UK. Tel: +44 1582 581051. Fax: +44 1582 581051. Email: vhfsubs@vhfcomm.co.uk

GERMANY - UKW-BERICHTE, POB 80, D-91081 BAIERSDORF, Germany. Tel: 09133 7798-0. Fax: 09133 779833.

GREECE - KM PUBLICATIONS , 63 Ringwood Road, LUTON, LU2 7BG, UK. Tel: +44 1582 581051. Fax: +44 1582 581051. Email: vhfsubs@vhfcomm.co.uk

HOLLAND - KM PUBLICATIONS , 63 Ringwood Road, LUTON, LU2 7BG, UK. Tel: +44 1582 581051. Fax: +44 1582 581051. Email: vhfsubs@vhfcomm.co.uk

ITALY - R.F. Elettronica di Rota Franco, Via Dante, 5 - 20030 Senago, MI, Italy
Fax: 02 99 48 92 76 Tel. 02 99 48 75 15

NEW ZEALAND - KM PUBLICATIONS , 63 Ringwood Road, LUTON, LU2 7BG, UK. Tel: +44 1582 581051. Fax: +44 1582 581051. Email: vhfsubs@vhfcomm.co.uk

NORWAY - WAVELINE AB, Box 60224, S-216 09 MALMÖ, Sweden. Tel: +46 40 16 42 66. Fax: +46 40 15 05 07. GSM: 0705 16 42 66
e-mail: waveline@algonet.se http://www.algonet.se/~waveline

SOUTH AFRICA - KM PUBLICATIONS , 63 Ringwood Road, LUTON, LU2 7BG, UK. Tel: +44 1582 581051. Fax: +44 1582 581051. Email: vhfsubs@vhfcomm.co.uk

SPAIN & PORTUGAL - JULIO A. PRIETO ALONSO EA4CJ, Donoso Cortes 58 5° -B, MADRID 15, Spain. Tel: 543 83 84

SWEDEN - WAVELINE AB, Box 60224, S-216 09 MALMÖ, Sweden. Tel: 040 16 42 66. Fax: 040 15 05 07. GSM: 0705 16 42 66 e-mail: waveline@algonet.se http://www.algonet.se/~waveline

SWITZERLAND - KM PUBLICATIONS , 63 Ringwood Road, LUTON, LU2 7BG, UK. Tel: +44 1582 581051. Fax: +44 1582 581051. Email: vhfsubs@vhfcomm.co.uk

UNITED KINGDOM - KM PUBLICATIONS , 63 Ringwood Road, LUTON, LU2 7BG, UK. Tel: +44 1582 581051. Fax: +44 1582 581051. Email: vhfsubs@vhfcomm.co.uk

U.S.A. - GENE HARLAN, ATVQ Magazine, 5931 Alma Drive, Rockford, IL 61108, USA. Tel: Toll free USA only: 800 557 9469; Elsewhere: +1 815 398 2683: Fax: +1 815 398 2688
Email: atvq@aol.com

ELSEWHERE - KM PUBLICATIONS, address as for the U.K.

**WWW:**

**ISSN 0177-7505**

# You have questions...

How many microvolts is –85 dBm at 50 ohms?
What is the spectral content of QPSK?
What the resistor color code and standard values?
How do digital IIR and FIR filters work?
What mixer spurs result from 70 MHz RF and 18.1 MHz LO?
How does an active filter work?
How do I wind a 120 nH inductor?
What capacitor resonates with 2.2 μH at 10.7 MHz?
What VSWR corresponds to 12 dB return loss?
What's the effect of reducing Q from 300 to 100?
What is Miller effect?
How do I perform two-port transformations?
How is bias set on bipolar transistors and FETs?
What are the basics of SPICE analysis?
What do all those noise parameters mean?
How do I make a 700 Hz active bandpass filter?
What are Maxwell's equations?
Can I graph the sin(x)/x curve?
What dimensions do I need for a 50 ohm microstrip?
How do I match 25 +j40 ohms to my 75 ohm system?
Where can I find a review of Kirchoff's Laws?
How much antenna gain does my system need?
How do I bias a BFR91 or 2N2222 transistor?
Will I get bad crosstalk between lines on my p.c. board?
Can I perform basic transfer function math?
How can a beginner learn about components at RF?
What's the difference between linear and non-linear?
What is the capacitance of two 1×1 cm plates spaced 1 mm?
Why do we use feedback?
I know RF, but where can I find digital basics?
Can I do vector to scalar conversons?
What is the AC impedance of a parallel R-C network?
What is a conductor's skin depth at 900 MHz?
What do those thermal resistance numbers mean?
Can I visualize the field lines between capacitor plates?
What is the mismatch loss of a 5.22:1 VSWR?
How do I simulate a darlington pair amplifier?
What are the resistor values for a 50 ohm 6 dB pad?
Should I use a pi or tee matching network in my circuit?

The Deal is Back!

# ELEKTA Professional

## has the answers!

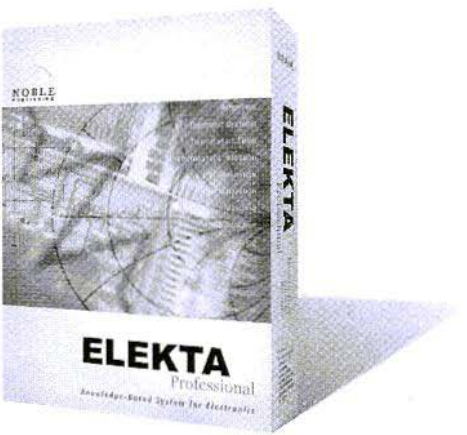


SPECIAL OFFER

**$49** plus shipping

***This Offer Expires 10/31/01 and is only available by ordering directly from Noble Publishing***

1999, CD-ROM, 55 page manual
ISBN 1-884932-08-8
NP-3. . . . . $49


FOR INFORMATION OR TO ORDER CONTACT:
NOBLE PUBLISHING CORPORATION
630 PINNACLE COURT, NORCROSS, GA 30071 US
TEL: +1 770-449-6774
FAX: +1 770-448-2839
WWW.NOBLEPUB.COM


NOBLE PUBLISHING

# COMPLETE KITS, PCB's & ICs ARE AVAILABLE FOR RECENT PROJECTS

**If the kit or PCB is not in this list please contact K. M. Publications**

| KIT | DESCRIPTION | ISSUE | No. | PRICE |
|---|---|---|---|---|
| DJ8ES-019 | Transverter 144/28 MHz | 4/93 | 06385 | £ 120.00 |
| DJ8ES-019mod | Transverter 50/28 MHz | 2/95 | 06392 | £ 120.00 |
| YT3MV | Low Noise L-Band Aerial Amplifier | 2/92 | 06358 | £ 27.50 |
| DG4RBF-007 | 4 GHz Frequency divider | 1/00 | 06117 | £ 42.00 |
| DG4RBF-008 | 100 MHz Frequency Divider | 1/00 | 06139 | £ 18.50 |
| DG4RBF-009 | Frequency Counter - including TXCO | 1/00 | 06141 | £ 105.00 |
| DG4RBF-010 | FC4000 Micro Controller (Uniboard C501) +EPROM | 1/00 | 06143 | £ 85.00 |
| DG4RBF | FC4000 Complete Kit | 1/00 | 06145 | £ 240.00 |
| DJ8ES-042 | 2 Mtr Transceiver Function Key Assembly | 1/00 | 06038 | £ 12.00 |
| DJ8ES-043 | 2 Mtr Transceiver DDS | 1/00 | 06561 | £ 65.00 |
| DJ8ES-044 | 2 Mtr Transceiver Exciter | 1/00 | 06563 | £ 95.00 |
| DJ8ES-045 | 2 Mtr Transceiver Transmit / Receive Mixer | 1/00 | 06565 | £ 90.00 |
| DJ8ES | 2 Mtr Micro Controller (Uniboard C501) +EPROM | 1/00 | 06566 | £ 85.00 |

| PCB | DESCRIPTION | ISSUE | No. | PRICE |
|---|---|---|---|---|
| DJ8ES-019 | Transverter 144/28 MHz | 4/93 | 06384 | £ 9.00 |
| DG4RBF-007 | 4 GHz Frequency divider | 1/00 | 06116 | £ 7.00 |
| DG4RBF-008 | 100 MHz Frequency Divider | 1/00 | 06138 | £ 8.50 |
| DG4RBF-009 | Frequency Counter | 1/00 | 06140 | £ 10.50 |
| DG4RBF-010 | FC4000 Micro Controller (Uniboard C501) | 1/00 | 06142 | £ 23.00 |
| DG4RBF | FC4000 Complete Kit of PCBs | 1/00 | 06144 | £ 48.00 |
| DJ8ES-042 | 2 Mtr Transceiver Function Key Assembly | 1/00 | 06037 | £ 5.00 |
| DJ8ES-043 | 2 Mtr Transceiver DDS | 1/00 | 06560 | £ 8.00 |
| DJ8ES-044 | 2 Mtr Transceiver Exciter | 1/00 | 06562 | £ 10.50 |
| DJ8ES-045 | 2 Mtr Transceiver Transmit / Receive Mixer | 1/00 | 06564 | £ 10.00 |
| DJ8ES | Micro Controller (Uniboard C501) + 2 Mtr EPROM | 1/00 | 06131 | £ 50.00 |
| S53MV | Kit of PCBs for Matjaz Vidmar Spectrum Analyser (comprises 36 PCBs) | 4/98-4/99 | S53MV | £ 55.00 |

| ICs | DESCRIPTION | ISSUE | No. | PRICE |
|---|---|---|---|---|
| DJ8ES | AT90S2313 For Digital Speech Store | 2/01 | 10354 | £ 17.25 |
| DJ8ES/DL5HAT | AT89C52 For GPS Control Of 10 MHz Standard | 1/01 | 10353 | £ 21.50 |

**Minimum shipping charge £5.00**

**K. M. Publications, 63 Ringwood Road, Luton, Beds, LU2 7BG, U.K.**

**Tel / Fax +44 1582 581051 email**

**Web Site**