SUPPLEMENT

TO THE POST OFFICE ELECTRICAL ENGINEERS' JOURNAL

Vol. 71 Part 1 April 1978

ISSN 0309-2720

CGLI & TEC:
GUIDANCE FOR STUDENTS

Contents

TECHNICIAN EDUCATION COUNCIL

Certificate Programme in Telecommunications

The following tables of references give details of the content of standard level-1 and level-2 units, together with references to model answers to past City and Guilds of London Institute examination questions that most closely match the TEC syllabi. The abbreviations used are explained on p. 4.

Back numbers of the *POEEJ* and *Supplement*, and the various model-answer books, can be ordered using the form on p. 32 of this *Supplement*. The order form shows in which issues the references made below appear.

Except for Line and Customer Apparatus 1, the topic areas and general and specific objectives are in accordance with the codes allocated in the TEC's standard unit. (A topic area is denoted by a capital letter, a general learning objective by an integer, and a specific learning objective by a decimal.)

LINE AND CUSTOMER APPARATUS 1

	Topic Areas*	*Supplement* References
A, B, C	The telephone in social and domestic use, and in commerce and industry. Role of public call offices. Extensions and switchboards. Concept and geography of telephone system. Purpose of signalling, electrical nature of signals, and requirements for transmission of speech. Charging	ETP: A1(*c*) 1972, A4(*a*) 1973, A10 1973, A5(*a*)(*iv*)(*v*) 1976, A6 1977 LPPA: A10(*a*) 1976 TTA: A8 1969, A4(*a*)(*i*) 1973
D	Forecasting. Factors affecting amounts of customer apparatus, local and junction line plant, and exchange equipment. Grade of service	ETP: A1(*a*)(*b*) 1972, A4(*b*)(*c*) 1973, A5(*a*)(*i*)–(*iii*)(*b*) 1976, A3(*b*) 1977 LPPB: A6 1974
E1–5	Principles of dial and key-pad. Multi-frequency signalling. Local-battery telephone circuit. Carbon-granule transmitter and rocking-armature receiver Central-battery systems; induction coil and regulator. Bell circuit. Tone callers. Extension arrangements	ETP: A9 1972, A6(*a*) 1975, A2 1976, A8(*b*)(*i*) 1977 RLTA: A3(*a*) 1974 TTA: A1(*a*)(*b*)(*i*) 1976 TpB: A8 1972
E6–7	Principles of cord-type and cordless switchboards. Night service. Facilities of PABXs	TTA: A5(*a*) 1974 TpB: A2 1975, A9(*c*) 1976
E8	Coin-collection and timing for public call offices	TpB: A2(*b*) 1974
F1	Signalling and transmission requirements of cables. Primary coefficents. Effect of cable materials and physical make-up on electrical and handling characteristics. Effect of resistance on DC signals. Types and uses of cable (including coaxial cable and waveguides)	ETP: A5(*a*) 1972, A8(*b*) 1976 LPPA: A6(*a*) 1976, A8(*a*) 1976, A10(*b*) 1976 LPPB: A10(*a*) 1973, A3(*a*) 1974, A6(*a*) 1975, A1(*b*)(*c*) 1976
F2	Accessibility of external plant. Local-distribution arrangements. Flexibility points. Relative advantages of overhead and underground distribution	ETP: A1(*a*) 1973, A4(*a*) 1975 LPPA: A3 1972, A5(*a*) 1972, A7(*a*) 1976, A10(*a*) 1976 RLTA: A10(*a*) 1975 LPPB: A6 1972
G	Characteristics of materials for conductors, contacts, line plant, cables and other components. Damage and interference	ETP: A2(*a*) 1972, A5(*b*)(*ii*) 1972, A2(*d*) 1973, A9(*c*) 1973, A8(*a*)(*i*)–(*iii*) 1976 LPPA: A1(*a*) 1972, A7(*c*) 1976, A8(*b*) 1976 LPPC: A3(*a*) 1972, A8(*a*) 1975

H Works planning. Selection of suitable plant. Surveys. Direct-labour contract projects	LPPA: A2 1973, A5 1976, A3 1977 LPPB: A6 1972
I Basic arithmetic. Safety. Customer relations. Legal obligations	LPPA: A1(*b*) 1972, A2(*b*) 1972, A9(*a*) 1972, A8 1973, A1 1976, A2 1976, A7(*b*) 1976, A5 1977 LPPB: A8 1972

* The topic areas and general objectives are in accordance with codes allocated in the British Post Office Vocational Training Division's booklet, *Line and Customer Apparatus 1; Learning Objectives and Suggested Sources of Teaching Material*, published in May 1977

MODEL-ANSWER BOOK REFERENCES FOR LINE AND CUSTOMER APPARATUS 1

Topic Areas	Model-Answer Book References
A, B, C	ETP: Q4 (first part) TTA: Q3.4(*a*)(*i*), Q5.1(*a*)(*b*), Q5.2 (first and second parts)
D	ETP: Q2 (third part), Q4 (second part) TTA: Q9.1(*a*)(*b*)
E1–5	ETP: Q54, Q57, Q58 (third part), Q59 (first part) TTA: Q1.7, Q3.3 (first part)
F1	ETP: Q32–34 LPPA: Q10.1, Q10.2
F2	ETP: Q13(*a*) LPPA: Q2.4 (second part) TTA: Q11.1 (first part). Q11.3 (first part)
G	ETP: Q15 (second part) LPPA: Q1.1 (first part), Q1.3
H	LPPA: Q2.1, Q2.2, Q8.1–8.3
I	LPPA: Q4.4 (second part), Q12.1, Q12.4 (second part), Q13.2 (second part)

MATHEMATICS 2

Topic Areas (TEC Standard Unit U76/033)	*Supplement* References
A Simultaneous equations. Quadratic equations. Roots	PM: A7(*a*)(*c*) 1973, A5(*a*) 1974, A1(*a*) 1975 MB: A1 1973 MA: A1 1971, A3(*a*) 1971, A1 1972, A2(*a*) 1972, A4(*a*) 1972, A6(*b*) 1972. A6(*a*) 1973, A1(*b*)(*c*) 1974, A5(*a*)(*b*) 1974, A6(*d*) 1974, A2(*a*) 1975, A5(*a*) 1975, A6(*c*) 1975, A8 1976, A9 1976, A8(*b*)(*c*) 1977, A9 1977
B3 Mid-ordinate rule. Use of planimeter. Average value of common waveforms	MA: A10 1971, A10(*b*) 1972, A9(*a*)(*b*) 1973, A8 1974, A10(*b*) 1975, A6 1976, A6 1977
B4–6 Square-law and quadratic graphs; effect of constants. Graphical solution of simultaneous and quadratic equations. Conversion of non-linear expressions to obtain straight-line graphs. Logarithmic scales. Gradients, incremental changes, rates of change, and maximum and minimum values	PM: A6(*a*)(*b*)(*i*)(*ii*) 1973, A3 1974, A7(*a*) 1976 MA: A9 1971, A6(*a*) 1972, A9 1972, A3 1973, A7 1973, A6(*a*)(*b*)(*c*) 1974, A6(*a*)(*b*) 1975 MB: A3 1972 (in association with topic area B8), A3 1973, A3 1974, A5(*c*) 1974 (in association with topic area B8), A3 1975, A3 1976, A7(*a*) 1976, A3 1977 MC: A1 1969
B7–8 Exponential tables and graphs. Napierian logarithms	PM: A5(*c*) 1973, A8(*b*)(*iii*)(*iv*) 1975 MA: A9(*b*)(*d*) 1974 MB: A3 1972 (in association with topic area B4), A5(*c*) 1973, A2 1974, A5 (*a*)(*c*) 1974 (in association with topic area B6), A6 1975, A2 1976, A4 1976, A4(*b*)(*ii*) 1977 TPB: A8(*a*) 1974
C Statistics: mean, median, mode, quartile and percentile. Probability and expectation: events, addition and multiplication laws	—
D11–12 Secant, cosecant and cotangent ratios. Tables. Reciprocal relationships. Sine, cosine and tangent graphs. Graphical addition of sine waves. Amplitude, lead and lag. Simple trigonometrical relationships	PM: A4(*a*)(*b*) 1972, A6(*a*) 1974, A7(*b*) 1974, A10(*b*) 1974, A7(*b*) 1975, A8(*b*)(*i*)(*ii*) 1975 MA: A4 1971, A5(*a*) 1971, A2(*a*) 1973, A3 1974, A4(*a*)(*c*) 1974, A3(*a*) 1975, A4(*a*)(*b*) 1975, A2(*a*) 1976, A3(*c*) 1976
D13 Sine rule. Cosine rule. Trigonometrical formula for area of a triangle	PM: A10(*a*)(*i*) 1974 MA: A7(*a*) 1971. A7(*c*) 1972, A8(*b*) 1972, A8 1973, A7 1974, A8 1975, A4 1976, A5 1977 MB: A7(*b*) 1974, A8 1975, A6(*b*) 1976, A5 1977
E Two-state concept. OR, AND and NOT functions. Truth tables. Theorems of Boolean algebra	CA: A4(*a*) 1971, A4(*a*)(*b*)(*i*) 1975 CB: A1(*a*) 1975

ELECTRICAL PRINCIPLES 2

Topic Areas (TEC Standard Unit U75/019)	*Supplement* References
A, B Units. Ohm's law in series-parallel circuits. Superposition theorem. Kirchhoff's laws	ES: A5 1976 TPA: A1 1972, A1 1973, A4 1974, A2 1975, A1 1977
C Charged bodies. Electric field strength. Dielectrics. Charge. Capacitance. Capacitors in series and parallel. Dielectric strength and working voltage. Energy stored by a capacitor. Types of capacitor	TPA: A8 1972, A5 1974, A3(*b*)(*c*) 1975, A6 1976, A5 1977 RLTA: A4 1974 TPC: A1(*i*) 1969
D Magnetic flux, flux density, magnetomotive force, magnetizing force, field strength and permeability. Ferromagnetic materials. Magnetizing curves and permeability/field-strength curves. Reluctance. Series magnetic circuits. Screening. Hysteresis, hysteresis loops and loss. Remanence, coercive force and saturation	ES: A9(*a*) 1972, A9(*a*) 1973, A9(*a*)(*b*) 1975 TPA: A2(*a*)(*c*) 1974, A1 1975 TPB: A3(*a*)(*ii*) 1972, A10 1973, A3(*a*)(*ii*)(*b*) 1974
E Lenz's law. Faraday's laws of electromagnetic induction. Motor principle: force on conductor in a field. Generator principle: EMF as a function of flux density, length of conductor and velocity. Induced EMF as result of a changing magnetic field. Self and mutual-inductance effects. Transformer principle: turns and voltage ratios. Energy stored by an inductor	ES: A9 1971, A9(*b*) 1972, A9(*b*) 1973, A10(*a*) 1974, A9(*c*) 1975, A7(*a*) 1976, A8(*a*)(*i*)(*ii*) 1977 TPA: A2 1972, A3(*a*)(*b*) 1973, A8 1974, A2(*a*)(*b*) 1976, A3(*a*)(*i*)(*b*)(*ii*) 1977, A7 1977
F Simple alternator. Sinusoidal and non-sinusoidal waveforms. Amplitude, period and frequency. Instantaneous, peak, peak-to-peak, RMS and average values. Phasor representation. Resultants. Phase angle. Equation of a sine wave. Resistive AC circuits. Graphical, phasor and algebraic solutions. Form factor. Half and full-wave rectification	ES: A7(*a*) 1972, A8(*c*) 1975, A9(*c*) 1975 TPA: A5(*a*) 1973, A3 1974, A8(*b*) 1975, A5 1976, A7 1976, A2 1977, A6(*a*) 1977
G Voltage, current and power in purely inductive and purely capacitive circuits. Reactance. Series inductance-resistance and capacitance-resistance circuits. Impedance. Phasor diagrams and impedance triangles. Series inductance-capacitance-resistance circuits. Series resonance	TPA: A4(*a*) 1972 (theoretical part), A5 1972, A7 1972, A5(*b*) 1973, A7 1974, A6 1975, A6(*b*) 1977 TPB: A1(*a*) 1973, A2(*b*) 1974, A1(*a*) 1975, A10(*b*) 1976
H Moving-iron and moving-coil instruments. Use of ammeters and voltmeters. Shunts and multipliers. Ohmmeters. Rectifier instruments. Frequency and waveform limitations. Use of multimeters, wattmeters, cathode-ray oscilloscopes and electronic voltmeters. Wheatstone bridge and potentiometer. Errors and calibration	ES: A10 1971, A8(*b*) 1972, A9 1974, A10 1976, A9 1977 TPA: A4(*a*) 1972 (practical part), A1 1974, A5 1975, A3 1976, A4 1976, A8(*b*) 1977 TPB: A10(*a*) 1976

MODEL-ANSWER BOOK REFERENCES FOR ELECTRICAL PRINCIPLES 2

Topic Areas	Model-Answer Book References
A, B	TPA: Q1–9, Q10 (second and third parts), Q11
C	TPA: Q21, Q23 (first part), Q26(*a*)(*b*), Q29
D	TPA: Q12, Q13 (second part), Q14 TPB: Q3.3, Q3.6
E	TPA: Q15–17, Q18 (first and second parts), Q19, Q20
F	TPA: Q30 (sketch (*b*)), Q32, Q33(*a*)(*b*)(*c*) and last part, Q34, Q35, Q36 (first and second parts), Q37 (in association with topic area G), Q38 (first, second and third parts), Q39 (in association with topic area G), Q40, Q59 (second and third parts), Q61, Q73 (in association with topic area H)
G	TPA: Q10 (first part), Q33 (penultimate part), Q36 (third part), Q37 (in association with topic area F), Q38 (last part), Q39 (in association with topic area F) TPB: Q5.1(*a*)(*b*), Q5.5 (first, second and third parts), Q5.6 (first part), Q5.7 (first part)
H	TPA: Q41 (first part), Q42–47, Q49–55, Q73 (in association with topic area F) TPB: Q12.3

ELECTRONICS 2

Topic Areas (TEC Standard Unit U76/010)	*Supplement* References
A1–3, B7–9 Properties of semiconductors; p and n-type material; electrons and holes; effect of temperature on conduction. Current flow in forward and reverse-biased p n junctions. Junction potentials and static characteristics of germanium and silicon diodes. Peak inverse voltage and breakdown effect. Applications of power, Zener and signal diodes. Thermionic emission. Thermionic diode: operation and anode characteristics; saturation; effect of heater current. Relative merits of thermionic and semiconductor diodes as rectifiers. Half and full-wave rectification; smoothing capacitors; waveforms. Voltage stabilization	ES: A5(*b*)(*c*) 1974 RLTA: A2(*a*)(*b*) 1974 TPA: A7 1973, A8 1975, A4 1977 TgB: A3 1973

A4–6, D12–13 Bipolar transistor: simplified physical representation; identification of emitter, collector and base. Modes of connexion; relative values of input and output resistances. Static characteristics and short-circuit current gains for common-base and common-emitter modes. Single-stage small-signal common-emitter amplifier: circuit; simple analysis of potentials; simple and automatic biasing; quiescent operating point; effect of sinusoidal input; phase inversion. Construction and use of load line. Voltage, current and power gain. Thermal runaway and heat sinks	ES: A8(*a*) 1976 RLTA: A2(*a*) 1973, A10(*a*)(*ii*) 1974, A8(*a*)(*b*)(*c*) 1975, A7 1976, A7 1977 TPA: A9 1973, A10(*c*) 1975, A9 1976, A9 1977 TPB: A5 1974, A6(*a*) 1976
B10, D14–15 Action of thermionic triode; static characteristics; input resistance, anode slope resistance, mutual conductance and amplification factor. Single-stage small-signal triode amplifier: circuit: voltages and currents in the circuit; automatic biasing; effect of sinusoidal input; phase inversion. Construction and use of load line. Voltage gain	RLTA: A5 1973, A7 1975, A10(*a*) 1976 TPA: A10 1972, A9 1974
C Principles of cathode-ray tube. Deflexion	TPC: A9(*a*)(*b*) 1973
E Shape and uses of sinusoidal, rectangular and saw-tooth waveforms. Elementary principles of a sine-wave oscillator. Frequency of oscillation. Circuits of tuned-collector and triode oscillators. Biasing	RLTA: A7 1974, A9 1975, A6(*a*) 1976, A10 1977
F Two-state devices. Information in 2-state form. Logic functions, truth tables, Boolean symbols, and current and superseded circuit symbols for AND, OR and NOT gates. Diode AND and OR gates. The transistor as a switch. Transistor NOT gate	CA: A4(*a*) 1971, A8 1972, A7 1973, A8 1974, A4(*a*)(*b*)(*i*) 1975

Note Topic D16 (not shown in the above table) concerns the automatic biasing of valve and transistor amplifiers. References for this topic have been included with those for the 2 types of amplifier and for oscillators (D12, D14 and E)

MODEL-ANSWER BOOK REFERENCES FOR ELECTRONICS 2

Topic Areas	Model-Answer Book References
A1–3, B7–9	TPA: Q56, Q57 (first part), Q58 (except part (*c*) and final part), Q59 (second and third parts), Q61, Q62
A4–6, D12–13	RLTA: Q8.1–8.5, Q8.6(*c*) and final part, Q9.3 (first part), Q9.4(*a*)(*b*)(*i*), Q9.5(*a*), Q9.6(*a*)(*ii*) TPA: Q63–66 TPB: Q8.1, Q8.2, Q8.3 (except first part), Q8.4, Q8.5 (first and second parts), Q8.6 (first part), Q8.7 (first part), Q8.9
B10, D14–15	RLTA: Q8.6(*a*) and penultimate part, Q8.7 TPA: Q67–71
E	RLTA: Q10.2–10.4

Mathematics 1, Physical Science 1 and Telecommunication Systems 1 Tables of references for these units were given in the January 1978 *Supplement*. So that the topic numbers allocated in those tables can be related to the topic areas of the standard published units, the following table of equivalents is given.

POEEJ Allocated Topic Number	Topic Area and General and Specific Objective Codes of Standard Unit		
	Mathematics 1 (U75/005)	Physical Science 1 (U75/004)	Telecommunication Systems 1 (U76/007)
1	A1–2	A2	A1
2	A3–4	B4	A2
3	B5	B5, 6·1, 6·2, 7 and 8	B
4	B6–8	C	C
5	C	D10–12	D
6	D	D13	E7
7	E	E	E8
8	F15–17	F16·1–16·3 and 16·10	E9
9	F18	G19	E10
10	G	I22	E11
11	——	I23–24	F

ABBREVIATIONS

CA, CB: Computers A B
ES: Engineering Science
ETP: Elementary Telecommunication Practice
LPPA, LPPB LPPC: Line Plant Practice A, B, C
MA, MB, MC: Mathematics A, B, C
PM: Practical Mathematics

RLTA: Radio and Line Transmission A
TgB: Telegraphy B
TpB: Telephony B
TPA, TPB, TPC: Telecommunication Principles A, B, C
TTA: Telephony and Telegraphy A

CITY AND GUILDS OF LONDON INSTITUTE

Questions and Answers

Answers are occasionally omitted or reference is made to earlier Supplements in which questions of substantially the same form, together with the answers, have been published. Some answers contain more detail than would be expected from candidates under examination conditions.

ELEMENTARY TELECOMMUNICATION PRACTICE 1977

Students were expected to answer any 6 questions.
The use of electronic pocket calculators was permitted

Q1 (a) Sketch and label the parts of a 3-position lever-type key with 2 change-over contacts, as used on telephone switchboards. Describe how reliable operation of the contacts is achieved in the design of this key.

(b) Sketch one other type of contact used on key or relay springs, and name 2 other materials commonly used for contacts.

A1 (*a*) See A1, Elementary Telecommunication Practice 1975, *Supplement*, Vol. 68, p. 86, Jan. 1976. (See also Corrections, Vol. 70, p. 8, Apr. 1977.)

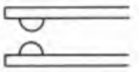

Dome-shaped contacts

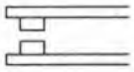

Cylindrical contacts

(*b*) Two other contact shapes commonly used are the dome and the cylinder, illustrated in the sketch. Dome-shaped contacts are generally used for light-current applications. Cylindrical contacts are usually made of tungsten and are used for carrying heavier currents.

Other materials used for contacts include gold (usually applied to the contact as a thin film) and platinum. These have excellent conductivity and corrosion-resistance, but are more expensive than tungsten or silver-gold alloy.

Q2 (a) Describe, with sketches, the construction of both of the following:

(i) a 4-wire cable used for wiring between telephone points in a customer's premises, and

(ii) a 4-wire cord used for connecting the handset and the body of a telephone. Give reasons for any differences in construction of this cord when compared with the cable described in part (i) above.

(b) Describe briefly a typical code used to identify wires or pairs for one of the following types of telephone cable:

(i) a small paper-insulated quad-trunk type of external cable, or

(ii) a plastic-insulated cable used for wiring between the main distribution frame and intermediate distribution frame in a telephone exchange.

A2 (*a*) (*i*) The construction of a 4-wire cable of the type used in subscribers' premises is shown in sketch (*a*). The PVC sheath gives resistance to the accidental mechanical damage and abrasion that may be expected in normal use. Apart from electrical requirements, the choice of wire diameter is a reasonable compromise between general strength requirements (for example, for ease of stripping and terminating) and the desirability of the cable having an acceptable and neat appearance when installed.

The 4 conductors are twisted together symmetrically, and the sheath is extruded over them. For identification purposes, the insulation of each conductor is coloured in accordance with the standard (internal) colour code: blue, orange, green and brown for a 4-wire cable.

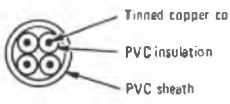

(*a*)

(*ii*) A telephone cord must have both flexibility and tensile strength. A cable with solid conductors of the type described in part (*i*) would lack flexibility, and conductors would soon break with normal use. It is necessary, therefore, to use conductors made by bunching or twisting together a number of thinner wires. These can be fine copper wires, but a more usual alternative for telephone (small-current) use is a *tinsel* form. In this form, each wire is made by winding a very fine copper tape around a terylene thread or similar synthetic fibre. This produces a fine conductor with good tensile strength and flexibility. Bundles of these fine conductors are covered with PVC insulation to form flexible wires, the insulation being coloured for identification; 4 such wires are then assembled and covered with a PVC sheath to make a cord. The cord is fitted with specially-shaped retaining grommets to ensure that any strain is taken by the cord as a whole and not by individual conductors at their terminations.

Handset cords are available pre-formed into a helical coil so that they occupy little space when not in use but can extend up to 5 times their original length.

Each conductor has a spade-type terminal which is crimped to give an effective and reliable connexion to the tinsel-form conductors, and which facilitates connexion to screw terminals in the telephone instrument. Sketch (*b*) shows a typical handset cord.

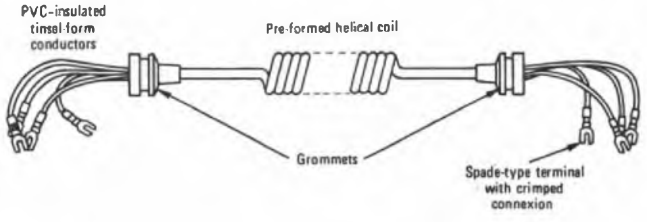

(*b*)

(*b*) (*i*) See A8, Elementary Telecommunication Practice 1976, *Supplement*, Vol. 70, p. 7, Apr. 1977.

(*ii*) See A4, Elementary Telecommunication Practice 1974, *Supplement*, Vol. 68, p. 13, Apr. 1975.

Q3 (a) A town is served by 3 automatic telephone exchanges, having ultimate capacities of 10 000, 4000 and 2000 lines. With the help of a simple diagram, describe how they may be linked together, and outline a suitable common numbering scheme.

(b) (i) Explain how the number of calls carried by a typical exchange varies throughout a normal working day. Illustrate your answer with a graph.

(ii) Explain briefly what is meant by grade of service, and why it is used.

A3 (*a*) A possible simple network for the 3 exchanges is shown in sketch (*a*). Each exchange is provided with direct access to the other 2 exchanges via junction cables. Simple common numbering could use a 5-digit scheme in which the first digit identified the exchange required and so determined the routing of the call. Thus, the 10 000-line exchange (A) could have subscribers with telephone numbers 20000–29999, the 4000-line exchange (B) numbers 30000–33999, and the 2000-line exchange (C) numbers 40000–41999.

Consider a call initiated by a subscriber on exchange A. The first digit dialled determines whether the call uses further switching in exchange A to call a subscriber with a number 2*XXXX*, or whether a junction is seized to either exchange B or exchange C if the called number is 3*XXXX* or 4*XXXX*. In the second case, switching is completed in the selected exchange.

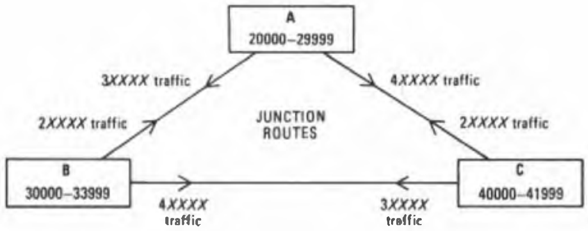

(*a*)

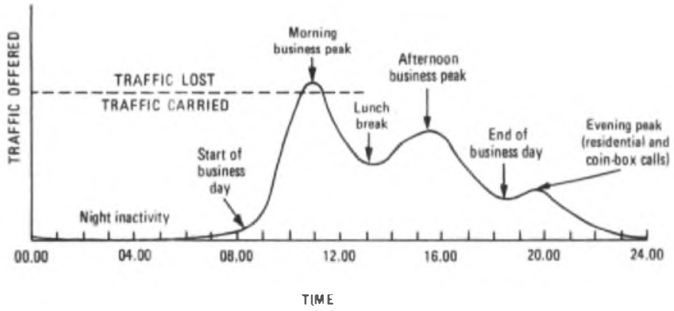

(*b*)

(*b*) (*i*) A graph showing typical traffic variations over a 24 h period is given in sketch (*b*). Reasons for the variations are marked on the graph.

(*ii*) From sketch (*b*), it can be seen that the number of calls through an exchange varies considerably during a normal day. It is uneconomic to provide sufficient equipment to handle all the calls likely to be made during the busiest period of the day, since much of the equipment would then be idle for the rest of the day. Thus, during the peak calling period, some calls are permitted to fail due to lack of equipment, as indicated in sketch (*b*). The number of calls lost in this way, expressed as a ratio of the number of calls attempted, is referred to as the *grade of service* offered.

Q4 (*a*) *Describe, with sketches, 2 ways in which conductors may be connected to a piece of apparatus without soldering. In each case, state where such a connexion would be used.*

(*b*) *List the precautions that are necessary to ensure a good soldered connexion.*

A4 (*a*) Two types of screw termination are shown in sketches (*a*) and (*b*). The main advantage of screw terminations is the ease with which the connexion can be made or remade.

Sketch (*a*) shows the simple screw-and-washer type used in terminal blocks for telephone instruments. Bare conductors or spade-type terminals can be accepted, and the washer eliminates the possibility of strain-damage to wires by reducing the rotation effect of the screw.

Another form, shown in sketch (*b*), compresses the wire between the end of a screw and the inside wall of a hole bored in a metal insert. This form is frequently used in power applications.

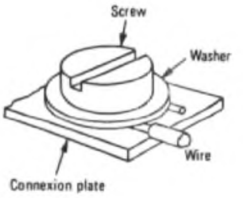

(*a*)

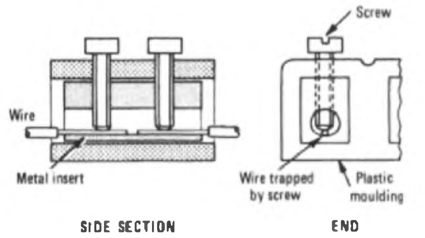

(*b*)

Wire-wrapped terminations are another common form of non-soldered joint. (See A10, Elementary Telecommunication Practice 1976, *Supplement*, Vol. 70, p. 8, Apr. 1977.)

(*b*) There are 3 important requirements for good soldering: cleanliness, correct temperature, and use of the correct flux. The procedure for a good soldered connexion is as follows.

(*i*) The wire and the tag should be clean and free from oxide film or other contamination.

(*ii*) The insulation is removed and the wire wrapped tightly around the tag. Usually, 1½ turns are sufficient to give close mechanical contact with the tag so that the solder will act as an adhesive rather than a conductor.

(*iii*) The soldering iron should have a bright, clean, tinned face and be at the correct temperature. The tinned face is applied to the wire and tag to heat them.

(*iv*) The solder, containing the resin flux, is then applied to the tag so that, as the tag and wire reach the correct temperature, the solder melts and flows evenly into the joint. As soon as the solder has melted, the iron is moved over the conductor and drawn off the tag, carrying any slight surplus of solder with it. The iron should be applied to the joint for sufficient time to ensure proper melting, but not long enough to damage the adjacent wire insulation.

Q5 (*a*) (*i*) *What is the basic difference between primary and secondary cells?*

(*ii*) *Name one commonly-used example of each type of cell, and give a typical practical example of where each would be used. In each case, give 3 reasons for your choice.*

(*b*) (*i*) *Explain what is meant by polarization in a simple primary cell, and explain how it affects the internal resistance of the cell during discharge.*

(*ii*) *Explain what is meant by specific gravity, and why it is of particular interest in connexion with the use of secondary cells.*

A5 (*a*) (*i*) In a primary cell, electrical energy is produced by an irreversible chemical action, and the cell cannot be recharged except by renewing the materials used. The chemical action in a discharging secondary cell is reversible and, if electrical current is made to flow in the opposite direction through the cell, the original chemicals are reformed; that is, the cell can be recharged.

(*ii*) The most common form of primary cell is the dry Leclanché cell. It is used for portable equipment such as multi-range meters with resistance-measurement ranges, portable gas detectors and transistorized test oscillators. Equipment of this type normally requires small or moderate currents for short periods only. For such purposes, the limited capacity and relatively high internal resistance of the dry Leclanché cell are not serious disadvantages, and the advantages of compactness, low weight and cleanness generally outweigh the problem of replacing exhausted cells.

Secondary cells, such as the lead-acid type, are heavier, but have low internal resistance and can be designed to deliver large currents. Coupled with their ability to be recharged, these factors tend to make them particularly suitable for static installations, such as the DC power source in telephone exchanges.

(*b*) (*i*) In a primary cell, the chemical action accompanying the flow of current leads to the generation of hydrogen which accumulates at the positive electrode of the cell; that is, hydrogen ions in the electrolyte carrying a positive electrical charge move towards the anode and form hydrogen gas as they give up their charge. The hydrogen gas tends to form an insulating layer on the surface of the anode and this progressively increases the internal resistance of the cell. This process is known as polarization and, unless the hydrogen is removed (for example, by oxidizing it to form water), the cell will cease to deliver current. In the Leclanché cell, the depolarizing agent has a limited life, and the internal resistance does eventually rise.

(*ii*) Specific gravity is the ratio of the mass of a given volume of a substance to the mass of an equal volume of water at 4°C.

In the lead-acid secondary cell, sulphuric acid in the electrolyte reacts with the electrodes, converting them to insoluble lead sulphate as the cell discharges. Thus, the electrolyte becomes diluted. On charging, the reverse action takes place, and the electrolyte contains more acid. Pure sulphuric acid is heavier than water so that, by measuring the specific gravity of the electrolyte, the state of charge of the cell can be determined; a high specific gravity indicates a high charge, and vice versa. The method is particularly useful because the specific gravity varies directly with the state of charge of the cell.

Q6 (*a*) (*i*) *Describe what is meant by loop-dialling, illustrating your answer with a simple circuit diagram and a graph of line-current variation with time.*

(*ii*) *List 4 signals required to set up and control a local telephone call.*

(*b*) *Describe, with reasons, an alternative to loop-dialling that would be more satisfactory for use over trunk circuits. Give an example of any code that might be used.*

A6 (*a*) (*i*) When a subscriber dials a number, the dial contacts break and remake a number of times, according to the number dialled. Each time the contacts break, current in the subscriber's loop is interrupted (see sketch (*a*)) and a pulsing relay in the exchange releases. This relay controls the setting-up of the desired connexion, and the method of signalling is known as *loop-dialling*. Sketch (*b*) shows the 3 interruptions in the loop current that result when the digit 3 is dialled.

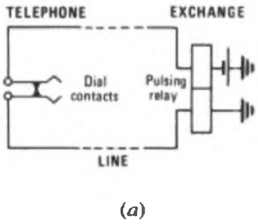

(*a*)

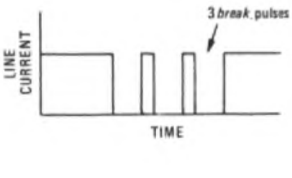

(*b*)

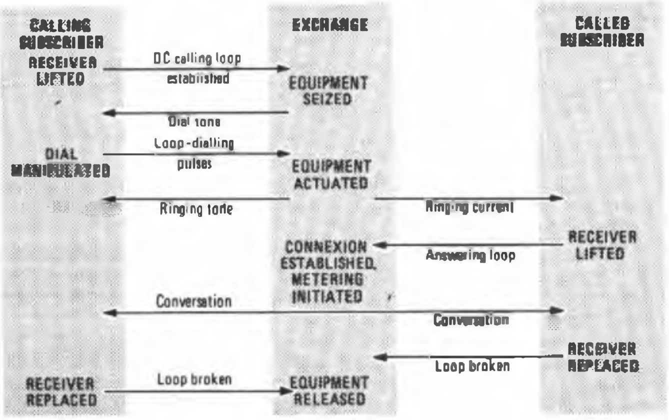

(*c*)

(*ii*) The signals required to set up and control a local telephone call are shown in sketch (*c*).

(*b*) Long circuits normally contain amplifiers, and therefore provide a path suitable only for AC signals. The DC pulses used in loop-dialling must therefore be converted to bursts of AC tone for transmission over an amplified circuit, and reconverted to DC form at the distant end.

A variation of this process is to arrange for each of the 10 possible dialled digits to be represented by different combinations of 2 tones selected from 5 available tones, designated V, W, X, Y and Z. Thus, the digit 1 might be represented by the simultaneous transmission of tones V and W, digit 2 by tones V and X, and so on.

Q7 (*a*) *Explain*

(*i*) *why heat is generated in an electrical component, and*
(*ii*) *how heat is lost by the component.*

(*b*) *A 10 W wire-wound resistor of 10 Ω, and an iron-cored inductor having a winding resistance of 10 Ω, are used in a power-supply smoothing circuit, and both carry the same direct current of 1 A. Which would you expect to be the hotter under this condition? Give the reasons for your answer by referring in general terms only to the construction of the 2 components.*

A7 (*a*) (*i*) When an EMF causes an electric current to flow through a conductor, there is always some resistance offered to the passage of electrons (at normal temperatures). The work done in overcoming this resistance appears as heat energy and is proportional to the resistance multiplied by the square of the current. Thus, in any component forming part of an electric circuit, heat is generated, the amount depending upon the electrical resistance and the current flowing.

(*ii*) Heat generated in a component is lost by heating cooler surroundings; for example, the air and adjacent components. Air immediately surrounding the component becomes hotter, expands and rises, making way for cooler, more dense air. This process is known as *convection*. Heat is also *conducted* away from the component through any cooler parts attached to it, such as connecting wires, mounting plates and heat sinks. *Radiation* of heat as electromagnetic waves (that is, infra-red radiation) also takes place.

(*b*) The resistor and the inductor carry the same current and have equal resistances. Thus, the rate at which heat is generated is the same in both. The temperature which each component attains is therefore dependent upon the rate at which heat is lost to the surroundings.

The rate of heat loss by convection and radiation increases with surface area. The rate of conduction of heat from its source (the wire windings in both cases) to the surface of the component and its attachments depends upon the thermal conductivity of the materials used.

The inductance of the resistor is required to be small (that is, the least possible number of turns should be used), while the inductor normally requires many turns of low-resistance wire to achieve the necessary inductance. Thus, the winding for the resistor will have less wire than that for the inductor, for broadly similar wire gauges, and hence rather less surface area. A resistor is generally wound on a simple former of insulating material which, while capable of working at high temperatures, is a poor conductor of heat. The inductor on the other hand, has an iron core, which is a good conductor of heat with a large surface area, and this is much more effective in heat dissipation. Therefore, the inductor dissipates heat generated in its winding much more quickly than does the resistor, so that the resistor reaches a higher working temperature than the inductor.

Q8 (*a*) *Sketch the construction of a telephone receiver of the rocking-armature type. Label the parts.*

(*b*) (*i*) *Describe how such a receiver converts an electrical signal into a sound wave.*

(*ii*) *Can the receiver also act as a microphone? Give brief reasons for your answer.*

A8 (*a*) and (*b*) (*i*) See A6, Elementary Telecommunication Practice 1975, *Supplement*, Vol. 68, p. 87, Jan. 1976.

(*b*) (*ii*) If a sound wave falls on the diaphragm of the receiver, the variations in air pressure cause the armature to rock in sympathy about its pivot. The air gap between the armature and one pole piece is increased, and that between the armature and the other pole piece is decreased, with corresponding increases and decreases in the magnetic reluctance of the air gaps. Thus, the magnetic flux in one pole piece, due to the permanent magnet, is reduced, while that in the other is increased. These changes cause an EMF to be induced in each of the coils. The directions of these EMFs are such as to induce a south pole at one pole face and a north pole at the other, to accord with Lenz's law that an induced EMF must set up a field which opposes the change causing it. Since the coils are connected in series-aiding (not series-opposition, as stated in the above reference), the EMFs are additive, producing an electrical signal corresponding to the sound wave. Thus, the receiver can act as a microphone. However, the receiver is much less efficient at converting sound energy to electrical energy than the carbon microphone normally used in telephones.

Q9 (*a*) *A relay is required to operate one or other of 2 contacts, depending upon the direction of the current flowing in its operating coil. Sketch a typical relay of this type and describe its operation, indicating clearly the path and direction of the magnetic flux.*

(*b*) *A different type of relay operates only when current flows in the coil, and is not dependent upon the direction of current.*

(*i*) *What is the essential difference between the magnetic circuit of this type of relay and the one described in part* (*a*)*?*

(*ii*) *What are the factors which affect the sensitivity of each type of relay?*

A9 See A3, Telephony and Telegraphy A 1976, *Supplement*, Vol. 70, p. 50, Oct. 1977.

Q10 (*a*) *State what the symbols shown in Fig. 1 represent.*

(*b*) *Describe, with the aid of a sketch, how one of the components can be mounted on a printed-wiring board, and describe how it is connected to other components on the same board.*

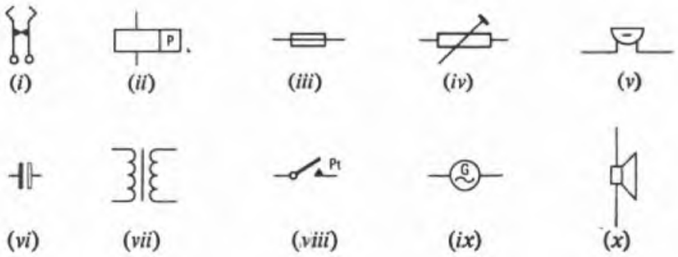

(*i*) (*ii*) (*iii*) (*iv*) (*v*)
(*vi*) (*vii*) (*viii*) (*ix*) (*x*)

Fig. 1

A10 (*a*) The symbols represent:

(*i*) a mechanically-operated pulsing-contact unit giving *break* pulses (dial-pulse contacts),
(*ii*) the coil of a polarized relay,
(*iii*) a fuse,
(*iv*) a resistor with preset adjustment,
(*v*) a DC buzzer,
(*vi*) a polarized electrolytic capacitor,
(*vii*) a transformer with ferromagnetic core,
(*viii*) a relay *make* contact unit with platinum contacts,
(*ix*) an AC generator (rotating machine), and
(*x*) a loudspeaker.

(*b*) See A3, Elementary Telecommunication Practice 1972, *Supplement*, Vol. 66, p. 6, Apr. 1973.

TELECOMMUNICATION PRINCIPLES A 1977

Students were expected to answer not more than 5 questions from Q1–8, and at least one question from Q9–10. The use of electronic pocket calculators was permitted

Q1 *(a) Use Kirchhoff's laws to obtain an equation for each of the circuits in Figs. 1 and 2.*

(b) For the battery-charging circuit shown in Fig. 3, calculate

(i) the value of R, and

(ii) the magnitude and direction of the current through the 16 V battery.

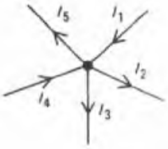

Fig. 1

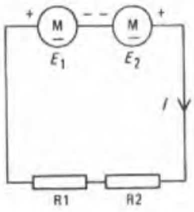

Fig. 2

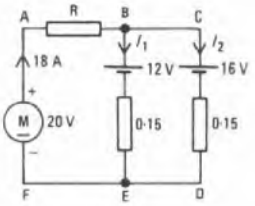

Fig. 3

A1 (*a*) Kirchhoff's first law states that the algebraic sum of all the currents at a junction must be zero. Fig. 1 shows currents I_1 and I_4 entering a junction, and currents I_2, I_3 and I_5 leaving. Therefore,

$$I_1 + I_4 = I_2 + I_3 + I_5.$$

Kirchhoff's second law states that, in any closed series circuit, the algebraic sum of the EMFs and potential differences must be zero. Fig. 2 shows a closed series circuit in which 2 opposing sources of EMF feed 2 resistors. Therefore,

$$E_2 - E_1 = I(R_1 + R_2).$$

(*b*) Let the circuit in Fig. 3 be annotated A, B, C, D, E and F as shown, and let the currents in BE and CD be I_1 and I_2 respectively, assumed to flow in the directions shown. (Note that these designations and currents are added to the given circuit at the discretion of the student; to conserve space, the circuit has not been redrawn here to show the before-and-after states.)

Applying Kirchhoff's second law to loops ABCDEFA and ABEFA:

$$20 - 16 = 18R + 0{\cdot}15I_2, \qquad \ldots\ldots \quad (1)$$

and

$$20 - 12 = 18R + 0{\cdot}15I_1. \qquad \ldots\ldots \quad (2)$$

Applying Kirchhoff's first law at junction B:

$$I_1 + I_2 = 18. \qquad \ldots\ldots \quad (3)$$

Adding equations (1) and (2), and substituting for $I_1 + I_2$ from equation (3) gives

$$4 + 8 = 36R + 0{\cdot}15 \times 18,$$

whence

$$R = 258\ \text{m}\Omega.$$

Substituting for R in equation (1) gives

$$I_2 = \frac{4 - 18 \times 0{\cdot}258}{0{\cdot}15} = -4{\cdot}29\ \text{A}.$$

The minus sign indicates that the current in CD flows in the opposite direction to that assumed for I_2.

Q2 *(a) An electric heater is designed to dissipate 30 W when operating on a 110 V DC supply. The only supply available is 220 V DC. Calculate*

(i) the value of a series resistor to enable the heater to operate at its correct rating,

(ii) the power dissipated by the resistor, and

(iii) the cost of supplying the heater for 12 h if the price of electrical energy is 3p per kilowatt hour.

(b) What is the main disadvantage of the method of voltage reduction used in part (a)?

(c) If a 110 V AC supply were available, state, with a reason, whether this would be suitable.

A2 (*a*) (*i*) The resistance of the heater, R ohms, is related to its dissipation, W watts, and supply voltage, V, by the equation $R = V^2/W$, whence $R = 110^2/30 = 403\ \Omega$.

The series resistor must have across it a potential difference of half the supply voltage of 220 V, and its resistance must therefore be 403 Ω, the same as that of the heater.

(*ii*) As the potential difference across the resistor is the same as that across the heater, the resistor must also dissipate 30 W.

(*iii*) The total power dissipated is 60 W, so that the energy consumption in 12 h is 60×12 W h $= 0{\cdot}72$ kW h. At 3p per kilowatt hour, the cost is $3 \times 0{\cdot}72 = 2{\cdot}16$p.

(*b*) It has been shown that half the power supplied is dissipated in the series resistor, so that the use of such a resistor is wasteful. Also, a large and expensive resistor would be needed to withstand the heat generated by the dissipation.

(*c*) A 110 V AC supply would be quite suitable. Unless some other value is stated, the RMS value is implied when an alternating voltage is quoted. This, by definition, is the value which gives the same heating effect as a direct voltage of the same numerical value. (This assumes the heater to be purely resistive, with no reactive component to give additional voltage drop.)

Q3 *(a) State where the energy is stored in*

(i) a current-carrying inductor, and

(ii) a charged capacitor.

For each case, state one application where the stored energy is an advantage and one where it is a disadvantage.

(b) An inductor has a resistance of 5 Ω and is designed to take cores of differing materials. With an air core, the inductance is 0·010 H. When the inductor is connected across a 25 V DC supply, calculate

(i) the steady current,

(ii) the energy stored, and

(iii) the average value of the self-induced EMF if the current in the inductor reaches 0·50 A at a time 0·10 ms after switching on.

(c) For the same supply voltage, state one way in which the stored energy in the inductor may be increased.

A3 (*a*) The energy in a current-carrying inductor is stored in the magnetic field set up by the current.

The energy in a charged capacitor is stored in the electric field in the dielectric between the plates.

Stored energy is used in the ignition coil of a petrol engine, and in the capacitor across the spark gap.

Stored energy can be a disadvantage in a relay-coil circuit, where spark-quench devices may have to be fitted to overcome its effects. Precautions against shock have to be taken for circuits containing large capacitors; the capacitors should be discharged before work is carried out.

(*b*) (*i*) For a DC supply, the steady current, I, in an inductor is determined only by the resistance of the coil and the voltage of the supply, in accordance with Ohm's law.

$$\therefore\ I = 25/5 = 5\ \text{A}.$$

(*ii*) The energy stored, E, is given by $E = 0{\cdot}5LI^2$ joules, where L is the inductance (henrys).

$$\therefore\ E = 0{\cdot}5 \times 0{\cdot}01 \times 5^2\ \text{J} = 125\ \text{mJ}.$$

(*iii*) The average induced EMF, e, is given by $e = -L \times \mathrm{d}I/\mathrm{d}t$ volts, where $\mathrm{d}I/\mathrm{d}t$ is the average rate of change of the current.

$$\therefore\ e = -0{\cdot}01 \times \frac{0{\cdot}5}{0{\cdot}1 \times 10^{-3}} = -50\ \text{V}.$$

(*c*) From the equation in part (*b*) (*ii*) of this answer, it can be seen that E may be increased by increasing L or I. But I is dependent on the supply voltage and cannot be altered. Therefore, L must be increased, and this can be done by placing an iron core in the solenoid.

Q4 *(a) Describe briefly the principle of operation of a p n junction, and hence show why it may be used as a half-wave rectifier.*

(b) Sketch a typical forward and reverse static characteristic for a low-power p n junction. Label each axis and mark in the approximate scales.

(c) Sketch 2 cycles of a sinusoidal input-current waveform and, using identical time scales, sketch the output waveform with a resistive load and without smoothing for

(i) a half-wave rectified supply, and

(ii) a full-wave rectified supply.

A4 (*a*) and (*b*) See A7, Telecommunication Principles A 1973, *Supplement*, Vol. 67, p. 23, Apr. 1974.

(*c*) For the principles of half-wave and full-wave rectification, see A8, Telecommunication Principles A 1975, *Supplement*, Vol. 69, p. 4, Apr. 1976. The required waveforms are shown in the sketch.

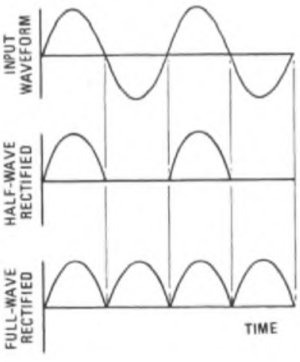

Q5 (*a*) *Upon what factors does the capacitance of a capacitor depend?*
(*b*) *A capacitor consists of 2 parallel plates, each 60 mm × 40 mm, spaced 1 mm apart. Calculate the value of the capacitor if the dielectric has a relative permittivity of 8.*
(*c*) *If the capacitor is charged to a potential difference of 200 V, calculate*

(*i*) *the potential gradient across the dielectric, and*
(*ii*) *the quantity of electricity stored.*

State the unit in each case.

(*d*) *Why is it necessary to take extra care when working on a circuit where capacitors are used?*

A5 (*a*) The capacitance, C, of a capacitor depends on the effective area of the plates, A metres^2, the reciprocal of the distance, d metres, between the plates, and the relative permittivity of the dielectric, ϵ_r, and is given by

$$C = \frac{\epsilon_0\epsilon_r A}{d}\ \text{farads},$$

where ϵ_0 is the permittivity of free space, equal to $10^{-9}/36\pi$ F/m.
(*b*) From part (*a*),

$$C = \frac{10^{-9} \times 8 \times 60 \times 40 \times 10^{-6}}{36\pi \times 1 \times 10^{-3}}\ \text{F} = \underline{169\cdot8\ \text{pF.}}$$

(*c*) (*i*) The potential difference, V, of 200 V is applied across a separation of 1 mm, so that the potential gradient is $200/1 \times 10^{-3}$ V/m = 200 kV/m.

(*ii*) The quantity of electricity (or charge stored), Q coulombs, is given by $Q = CV = 169\cdot8 \times 10^{-12} \times 200$ C = 34 nC.

(*d*) There is a risk of shock from charge that has not leaked away from large capacitors in a circuit using high working voltages. The terminals of such capacitors should first be shunted and then short-circuited before work is carried out.

Q6 (*a*) *For the circuit shown in Fig. 4, sketch a phasor diagram showing the phase relation between the current, the supply voltage and the voltages across the resistor and capacitor.*

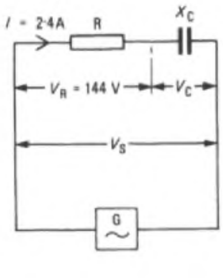

Fig. 4

(*b*) *The voltage across R is 144 V when the current in the circuit is 2·4 A. If the reactance, X_C, is 80 Ω, determine*

(*i*) *the resistance of R,*
(*ii*) *the voltage across the capacitor,*
(*iii*) *the supply voltage, V_S,*
(*iv*) *the phase angle of the circuit, and*
(*v*) *the power dissipated by the circuit.*

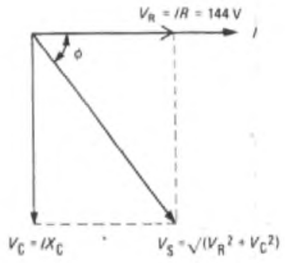

(*a*)

A6 (*a*) The phasor diagram is shown in sketch (*a*). The current, I, in a series circuit is the reference phasor, and the voltage across the resistance, V_R, is drawn in phase with I. The voltage across the capacitor, V_C, lags I by 90°, and V_S is the resultant of V_R and V_C.

(*b*) (*i*) $R = \dfrac{V_R}{I} = \dfrac{144}{2\cdot4} = \underline{60\ \Omega.}$

(*ii*) $V_C = IX_C = 2\cdot4 \times 80 = \underline{192\ \text{V.}}$

(*iii*) $V_S = \sqrt{(V_R^2 + V_C^2)} = \sqrt{(144^2 + 192^2)} = \underline{240\ \text{V.}}$

(*iv*) The phase angle, ϕ, of a circuit is the angle between the supply voltage and the current. From sketch (*a*),

$$\phi = \tan^{-1}\frac{V_C}{V_R} = \tan^{-1}\frac{192}{144} = \tan^{-1} 1\cdot33 = \underline{53\cdot13°.}$$

(*v*) Power is dissipated only in the resistance, and is given by

$$I^2R = 2\cdot4^2 \times 60 = \underline{345\cdot6\ \text{W.}}$$

Q7 *Describe one of the following experiments: either the measurement of resistance using the Wheatstone-bridge principle, or the demonstration of the effects of self and mutual inductance.*
Set out the answer in the form of a laboratory report, which should include a circuit diagram, details of the equipment used, the procedure, typical results and conclusions.

A7 Demonstration of Self and Mutual Inductance.

Self-inductance can be demonstrated by showing that an EMF is generated in a coil when its turns are cut by a changing magnetic field due to a changing current in the coil itself. Mutual inductance is the principle of the transformer, in which alternating current in a primary winding sets up a magnetic flux which cuts a secondary winding, causing an EMF to be generated in the secondary winding. Sketches (*a*) and (*b*) respectively show the equipment needed to demonstrate self and mutual inductance.

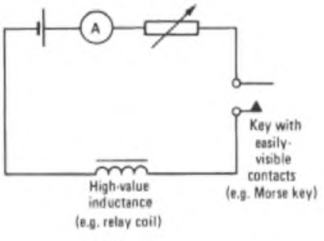

(*a*)

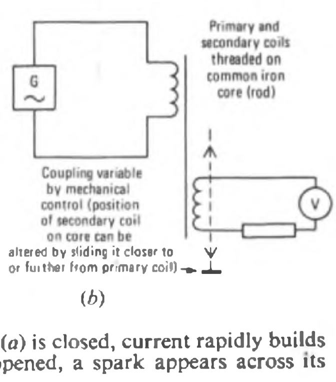

(*b*)

Procedure When the key in sketch (*a*) is closed, current rapidly builds up to a steady value. When it is opened, a spark appears across its contacts. This spark is much more intense than one which could be obtained from the battery supplying the steady-state current, and is due to a very high EMF appearing across the contacts. This EMF is the self-induced EMF generated in the coil by the rapidly-collapsing magnetic field, which can no longer be sustained when the current is disconnected.

The coupling in a transformer is *close*, so that the ratio of the secondary to primary EMFs is given by the ratio of the numbers of turns on the secondary and primary windings. In sketch (*b*), however, provision is made to vary the coupling; that is, to alter the mutual inductance between the primary and secondary coils by altering the distance between them. A constant primary voltage produces less EMF in the secondary coil as the coils are separated; that is, as the mutual inductance is reduced.

Q8 *(a) Name 3 essential features necessary for the operation of an electrical indicating instrument. Explain briefly how these are obtained in either the moving-coil or the moving-iron instrument.*

(b) A moving-coil instrument has a resistance of 75 Ω and gives full-scale deflexion with 1·0 mA flowing through it.

(i) Show how a resistor would be connected to enable the instrument to be used as a 0–20 V voltmeter.

(ii) Calculate the value of the resistor in part (i).

(iii) Of what type of material would this resistor be made? Give a reason for your answer.

A8 (*a*) Fundamentally necessary in both moving-iron and moving-coil instruments are 3 basic torques: a deflecting torque, a control torque and a damping torque.

The provision of the 3 torques for a moving-iron instrument is described in A3, Telecommunication Principles A 1976, *Supplement*, Vol. 70, p. 9, Apr. 1977.

The deflexion and control arrangements for a moving-coil instrument are illustrated in A5, Telecommunication Principles A 1975, *Supplement*, Vol. 69, p. 3, Apr. 1976. Damping forces in this type of instrument are provided by eddy currents induced in the light aluminium former on which the coil is wound. The former constitutes a single low-resistance turn which cuts flux in the radial air-gap as the coil is deflected. An EMF is therefore induced, and current flows in the former. By Lenz's law, the magnetic field set up by this current opposes the air-gap field, thus braking the movement.

(*b*) (*i*) At full-scale deflexion, the potential difference across the instrument is $1 \times 10^{-3} \times 75$ V = 75 mV. The voltage required to be measured is 20 V, so that a resistor is needed in series with the instrument to drop 19·925 V, as illustrated in the sketch.

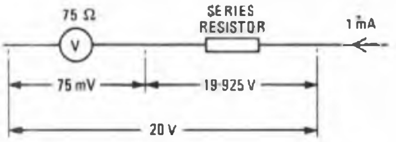

(*ii*) By Ohm's law, the value of the series resistance

$$= 19{\cdot}925/1 \times 10^{-3}\ \Omega = \underline{19{\cdot}925\ \text{k}\Omega}.$$

(*iii*) The value of the resistor must be stable under all working conditions. At full-scale deflexion, the resistor dissipates $1 \times 10^{-6} \times 19{\cdot}925 \times 10^3$ W ≈ 20 mW. This is small, and a ceramic-type resistor with a low temperature coefficient of resistance should be adequate.

Q9 *(a) Describe an experiment to determine the collector-current/collector-voltage (I_C/V_C) characteristics of a transistor connected in the common-emitter configuration. Include a circuit and a list of the measuring equipment.*

(b) Plot typical results.

(c) Draw a load line on the I_C/V_C curves representing a load resistance when the transistor is used as an amplifier.

A9 (*a*) Sketch (*a*) shows a suitable circuit for determining the I_C/V_C characteristics of a transistor in the common-emitter configuration, illustrating the equipment needed.

The operating conditions and limits specified by the manufacturer are first studied, and the base current, I_B, is set to a value (I_{B1}) within the specified range by adjusting resistor R1. By means of potentiometer R2, V_C is set to a series of values, and I_C is noted at each value, I_{B1} being maintained constant by adjusting R1 as necessary.

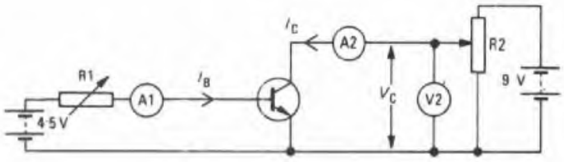

(*a*)

The value of I_B is reset to I_{B2} and the procedure repeated. A family of characteristics for different values of I_B is obtained in this way.

(*b*) Typical characteristics are shown in sketch (*b*).

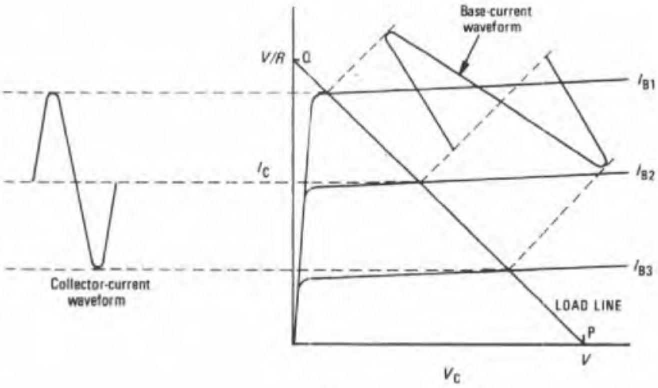

(*b*)

(*c*) When the transistor is used as an amplifier, there is a fixed collector load resistance, *R*, and a constant collector supply voltage, *V*. The load line for this condition is obtained by joining the point on the voltage axis representing $I_C = 0$ (that is, where $V_C = V$, shown as point P) to the point on the current axis representing $V_C = 0$ (that is, where $I_C = V/R$, shown as point Q, at which the whole supply voltage appears across the load resistor).

An alternating input base-current waveform, varying between I_{B1} and I_{B3} and applied to the load line, results in the output collector-current waveform shown, which has a much greater amplitude than the input waveform. The alternating input current is typically in the order of 200 μA, while the output current is in the order of 10 mA, a current amplification of 50 times.

Q10 *With the aid of simple sketches, describe the principle of operation of a moving-coil loudspeaker. Mention in particular the factors that control*

(a) the sensitivity, and

(b) the power that can be handled without excessive distortion.

A10 See A10, Telecommunication Principles A 1974, *Supplement*, Vol. 68, p. 18, Apr. 1975.

MATHEMATICS A 1977

Students were expected to answer any 6 questions.
The use of electronic pocket calculators was permitted where appropriate

Q1 *(a) A is an acute angle such that* $\cos A = 1/x$*. Find expressions in terms of x for sin A and tan A.*

(b) Express

(i) $223^\circ\,42'$ *in radians correct to 2 decimal places, and*
(ii) $3{\cdot}52$ *rad in degrees and minutes.*

(c) Find the 2 values of θ *between* 0° *and* 360° *which satisfy each of the following equations:*

(i) $\sin\theta = 0{\cdot}9026$, *(ii)* $\cos\theta = -0{\cdot}3453$, *(iii)* $\tan\theta = 1{\cdot}7532$.

(d) Find the values of:

$$(i)\ \frac{\cos^2 A + 2\sin^2 A}{2 + 2\sin^2 A}, \qquad (ii)\ \frac{(1 + 2\tan^2 A)\cos^2 A}{1 + \sin^2 A}.$$

A1 Triangle ABC is drawn such that $\cos A = 1/x$ (see sketch). By the theorem of Pythagoras, $BC = \sqrt{(x^2 - 1)}$.

$$\therefore\ \underline{\sin A = \frac{\sqrt{(x^2-1)}}{x}}, \text{ and } \underline{\tan A = \sqrt{(x^2 - 1)}.}$$

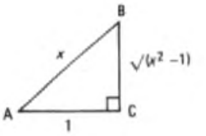

(b) *(i)* 180^c is equivalent to π rad.

$$\therefore\ 223^\circ\,42' = \frac{\pi}{180} \times 223\tfrac{42}{60} = \frac{\pi \times 223{\cdot}7}{180}\ \text{rad},$$

$$= \underline{3{\cdot}90\ \text{rad},}\ \text{correct to 2 decimal places.}$$

$$(ii)\ 3{\cdot}52\ \text{rad} = \frac{180}{\pi} \times 3{\cdot}52 = \underline{201^\circ\,41'}.$$

$$(c)\ (i)\quad \theta = \underline{64^\circ\,30'}\ \text{or}\ 180^\circ - 64^\circ\,30' = \underline{115^\circ\,30'}.$$

$$(ii)\quad \cos\theta = -\cos(180^\circ \pm \theta).$$

$$\therefore\ \theta = 180^\circ \pm 69^\circ\,48' = \underline{110^\circ\,12'}\ \text{or}\ \underline{249^\circ\,48'}.$$

$$(iii)\quad \theta = \underline{60^\circ\,18'}\ \text{or}\ 180^\circ + 60^\circ\,18' = \underline{240^\circ\,18'}.$$

$$(d)\ (i)\ \frac{\cos^2 A + 2\sin^2 A}{2 + 2\sin^2 A} = \frac{\cos^2 A + \sin^2 A + \sin^2 A}{2(1 + \sin^2 A)},$$

$$= \frac{1 + \sin^2 A}{2(1 + \sin^2 A)} = \underline{\frac{1}{2}}.$$

$$(ii)\ \frac{(1 + 2\tan^2 A)\cos^2 A}{1 + \sin^2 A} = \frac{\left(1 + \dfrac{2\sin^2 A}{\cos^2 A}\right)\cos^2 A}{1 + \sin^2 A},$$

$$= \frac{\cos^2 A + 2\sin^2 A}{1 + \sin^2 A} = \frac{\cos^2 A + \sin^2 A + \sin^2 A}{1 + \sin^2 A},$$

$$= \frac{1 + \sin^2 A}{1 + \sin^2 A} = \underline{1}.$$

Q2 *(a) Draw on the same axes the graphs of* $y_1 = 3\sin\theta$ *and* $y_2 = 2\sin 2\theta$ *between* $\theta = 10^\circ$ *and* $\theta = 70^\circ$ *at intervals of* 10°*.*

(b) Using the graphs in (a), solve the equations
(i) $3\sin\theta = 2\sin 2\theta$, *and*
(ii) $3\sin\theta - 2\sin 2\theta = 1$,
stating clearly how these solutions have been obtained.

(c) Given that $\sin 2\theta = 2\sin\theta\cos\theta$*, verify the result of (b)(i) by calculation.*

A2 For a very similar question and answer, see Q3, Mathematics A 1974, *Supplement*, Vol. 67, p. 93, Jan. 1975.
The numerical answers are given below.

$$(b)\ (i)\ \underline{\theta \approx 41^\circ\,30'}.\quad (ii)\ \underline{\theta \approx 62^\circ}.$$

$$(c)\ 3\sin\theta = 2\sin 2\theta,$$

$$= 2 \times 2\sin\theta\cos\theta = 4\sin\theta\cos\theta.$$

$$\therefore\ 3 = 4\cos\theta\quad (\text{or } \sin\theta = 0).$$

$$\therefore\ \theta = \cos^{-1} 0{\cdot}75 = \underline{41^\circ\,24'}.$$

Q3 *The neutral conductor of a 3-phase system carries the sum of 3 currents whose values and phase relationship are shown in Fig. 1.*

(a) Determine, with the aid of an accurate scale drawing, the total current in the neutral conductor and its phase relative to current I_1*.*

(b) Check the results of (a) by a suitable calculation.

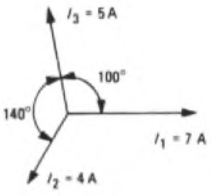

Fig. 1

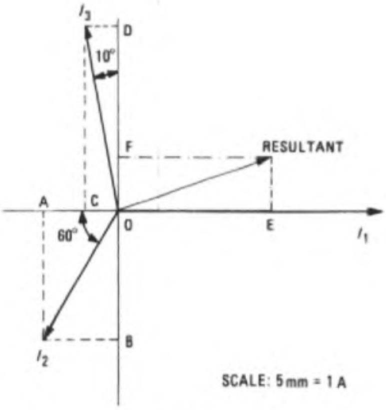

(a)

A3 *(a)* The 3 currents are shown in sketch *(a)*, drawn to scale on rectangular axes, with I_1 along the horizontal axis. Current I_2 is resolved into components OA and OB respectively along the horizontal and vertical axes, and I_3 is resolved into components OC and OD.

The net horizontal component, OE, is given by $OI_1 - OA - OC$, and the net vertical component, OF, by $OD - OB$. OE and OF are the components of the resultant, which is the neutral-conductor current. By measurement, the current in the neutral conductor is $\underline{4{\cdot}3\ A}$; its phase angle relative to I_1 is $\underline{19{\cdot}5^\circ}$.

(b) Referring to sketch *(a)*,

$$OA = OI_2 \cos 60^\circ = 4 \times 0{\cdot}5 = 2\ A,$$

and $OC = OI_3 \cos 80^\circ = 5 \times 0{\cdot}1736 = 0{\cdot}868\ A$,

so that $OE = 7 - 2 - 0{\cdot}868 = 4{\cdot}132\ A$.

Also, $OB = OI_2 \sin 60^\circ = 4 \times 0{\cdot}866 = 3{\cdot}464\ A$,

and $OD = OI_3 \cos 10^\circ = 5 \times 0{\cdot}9848 = 4{\cdot}924\ A$,

so that $OF = 4{\cdot}924 - 3{\cdot}464 = 1{\cdot}46\ A$.

The magnitude of the resultant is given by

$$\sqrt{(OE^2 + OF^2)} = \sqrt{(4{\cdot}132^2 + 1{\cdot}46^2)} = \underline{4{\cdot}382\ A,}$$

and its phase angle relative to I_1 is given by

$$\tan^{-1}\frac{OF}{OE} = \tan^{-1}\frac{1{\cdot}46}{4{\cdot}132} = \underline{19^\circ\,28'}.$$

Q4 *(a) A 50 m length of copper wire, 0·060 cm in diameter, is weighed both before and after it is coated with an insulating material. If the increase in weight is* $\pi \times 1{\cdot}95$ *g and the density of the insulation is* $1{\cdot}20$ *g/cm*^{3}*, calculate the average thickness of the insulating material.*

(b) A circular exhibition hall with minimum height 6·3 m has an internal ground area of circumference $\pi \times 56$ *m. The roof is in the form of a hemispherical shell. Calculate*

(i) the internal surface area of the roof, and
(ii) the volume of air space in the hall.

A4 *(a)* A cross-section of the wire is shown in sketch *(a)*. The volume of the uncoated 50 m length of wire

$$= \pi \times 0{\cdot}03^2 \times 50 \times 10^2\ \text{cm}^3.$$

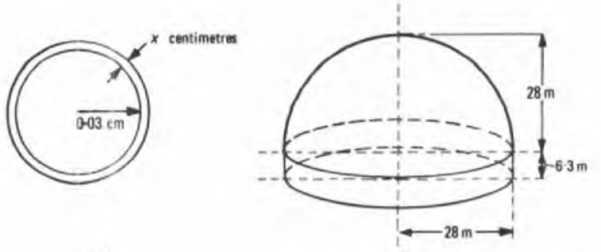

(*a*) (*b*)

The volume of the coated wire

$$= \pi \times (0\cdot03 + x)^2 \times 50 \times 10^2 \text{ centimetres}^3.$$

Therefore, the volume of the insulating material

$$= 5000\pi\{(0\cdot03 + x)^2 - 0\cdot03^2\} \text{ centimetres}^3.$$

The weight of the insulant, $1\cdot95\pi$ g, is equal to the density multiplied by the volume; that is,

$$1\cdot95\pi = 1\cdot20 \times 5000\pi\{0\cdot03^2 + 0\cdot06x + x^2 - 0\cdot03^2\} \text{ grams.}$$

$$\therefore\ 6000\,(x^2 + 0\cdot06x) = 1\cdot95.$$

$$\therefore\ x^2 + 0\cdot06x - 0\cdot000325 = 0.$$

$$\therefore\ x = \frac{-0\cdot06 \pm \sqrt{(0\cdot06^2 + 0\cdot0013)}}{2},$$

$$= \frac{-0\cdot06 \pm 0\cdot07}{2} = \underline{0\cdot005 \text{ cm.}}$$

(*b*) The exhibition hall is illustrated in sketch (*b*). Since the circumference of the circular floor is 56π m, the internal diameter is 56 m.

(*i*) The internal surface area of the hemispherical roof

$$= 2\pi \times 28^2 = \underline{4926 \text{ m}^2}.$$

(*ii*) The volume of air space in the hall is the volume of a cylinder of height 6·3 m and radius 28 m plus the volume of a hemisphere of radius 28 m, and is given by

$$\pi \times 28^2 \times 6\cdot3 + \frac{2\pi}{3} \times 28^3 = \underline{61\ 500 \text{ m}^3}.$$

Q5 Fig. 2 shows ABC, the original site of a factory. An extension, ADC, is to be considered. The total area ABCD will then be 10 000 m². If AB = 120 m, BC = 150 m and angle ABC = 62°, calculate the

(a) length of AC,

(b) area of triangle ABC,

(c) length of the perpendicular DE from D to AC, and

(d) length of AD if angle DAE = 71°.

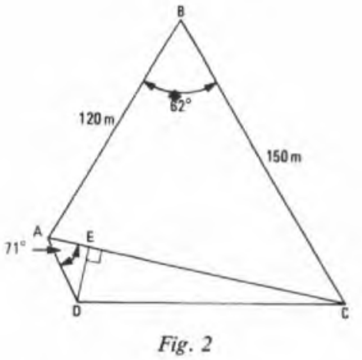

Fig. 2

A5 (*a*) Using the cosine rule in triangle ABC:

$$AC^2 = AB^2 + BC^2 - 2 \times AB \times BC \times \cos\angle ABC.$$

$$\therefore\ AC = \sqrt{(120^2 + 150^2 - 2 \times 120 \times 150 \times \cos 62°)},$$

$$= \sqrt{20\ 000} = \underline{141\cdot4 \text{ m.}}$$

(*b*) The area of triangle ABC

$$= \tfrac{1}{2} \times AB \times BC \times \sin\angle ABC,$$

$$= 0\cdot5 \times 120 \times 150 \times \sin 62° = \underline{7947 \text{ m}^2.}$$

(*c*) Now, the area of triangle ADC

$$= \text{area ABCD} - \text{area ABC},$$

$$= 10\ 000 - 7947 = 2053 \text{ m}^2.$$

But, the area of triangle ADC

$$= \tfrac{1}{2} \times AC \times DE,$$

$$\text{whence}\quad DE = \frac{2053}{0\cdot5 \times 141\cdot4} = \underline{29\cdot04 \text{ m.}}$$

(*d*) In triangle ADE,

$$AD = \frac{DE}{\sin\angle DAE} = \frac{29\cdot04}{\sin 71°} = \underline{30\cdot71 \text{ m.}}$$

Q6 (a) The power used in a manufacturing process during an 8 h shift is recorded at intervals, as given in the table below.

Time (h)	*0*	*1*	*2*	*3*	*3·5*	*4*	*4·5*	*5*	*5·5*	*6*	*7*	*7·5*	*8*
Power (kW)	*0*	*22*	*36*	*40*	*37*	*34*	*34·5*	*36*	*36*	*34*	*25*	*17*	*0*

(i) Plot the graph of power (y-axis) against time (x-axis).

(ii) Apply the mid-ordinate rule, using 8 intervals of 1 h, to determine the area of the figure.

(iii) State what the area represents and the unit in which it is expressed.

(b) Determine the average value of the periodic waveform shown in Fig. 3.

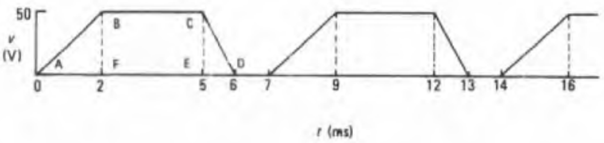

Fig. 3

A6 (*a*) (*i*) The graph of power/time is shown in sketch (*a*).

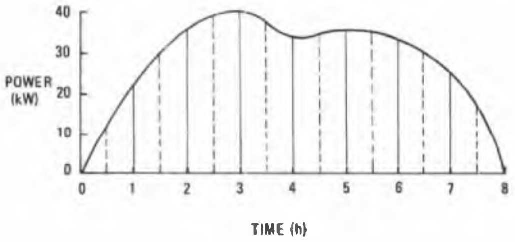

(*a*)

(*ii*) The area under the graph is divided into 8 intervals by the solid-line ordinates at the hourly intervals. Mid-ordinates (shown dashed) are erected at the mid-point of each interval. From the mid-ordinate rule, the area under the graph is given by the length of an interval multiplied by the sum of the mid-ordinates. Therefore, the area

$$= 1(12 + 30 + 39 + 37 + 34\cdot5 + 36 + 30 + 17),$$

$$= \underline{235\cdot5.}$$

(*iii*) The area under the graph is the *energy* expended. The SI unit of energy is the *joule* (1 W dissipated for 1 s) but, because the axes are shown in kilowatts and hours, a more appropriate unit here is the *kilowatt hour*. (1 kW h = 3·6 MJ.)

(*b*) Since the waveform is periodic, it is sufficient to consider only one period: say, that between $t = 0$ and $t = 7$ ms. The average value of v between 0–7 ms is given by

$$\frac{\text{area ABF} + \text{area BCEF} + \text{area CDE}}{7},$$

$$= \frac{\tfrac{1}{2} \times 2 \times 50 + 3 \times 50 + \tfrac{1}{2} \times 1 \times 50}{7} = \underline{32\cdot14 \text{ V.}}$$

Q7 *(a) Simplify the following, giving the results with positive indices only:*

(i) $(2a^{-3}b^{-2} \div 16a^3b^2)^{1/3}$, *(ii)* $\left[\dfrac{25st^2}{64s^{-5}t^4}\right]^{-1/2}$

(b) Rearrange the following formulae:

(i) $G = \dfrac{\mu R}{r + R}$ *to obtain an expression for R, and*

(ii) $\omega = \sqrt{\left(\dfrac{1}{LC} - \dfrac{R^2}{4L^2}\right)}$ *to obtain an expression for C.*

(c) The current, I amperes, in a circuit containing resistance R ohms and inductance L henrys, with an applied voltage V volts of frequency f hertz, is given by

$$I = \frac{V}{\sqrt{(R^2 + 4\pi^2 f^2 L^2)}}.$$

Calculate the value of I when V = 240, R = 40, f = 50 and L = 0·10.

A7 (*a*) (*i*) $(2a^{-3}b^{-2} \div 16a^3b^2)^{1/3} = \left(\dfrac{2}{a^3b^2} \times \dfrac{1}{16a^3b^2}\right)^{1/3},$

$$= \left(\frac{1}{8a^6b^4}\right)^{1/3} = \underline{\frac{1}{2a^2b^{4/3}}}.$$

(*ii*)
$$\left[\frac{25st^2}{64s^{-5}t^4}\right]^{-1/2} = \left[\frac{25}{64} \times \frac{s^6}{t^2}\right]^{-1/2}$$

$$= \left[\frac{64}{25} \times \frac{t^2}{s^6}\right]^{1/2} = \underline{\frac{8t}{5s^3}}.$$

(*b*) (*i*)
$$G = \frac{\mu R}{r + R}.$$

$\therefore\ G(r + R) = \mu R,$ or $Gr + GR = \mu R.$

$\therefore\ R(\mu - G) = Gr$ whence $R = \underline{\dfrac{Gr}{\mu - G}}.$

(*ii*) Squaring the given equation gives

$$\omega^2 = \frac{1}{LC} - \frac{R^2}{4L^2}.$$

$$\therefore\ \frac{1}{LC} = \omega^2 + \frac{R^2}{4L^2}, \text{ or } \frac{1}{C} = \omega^2 L + \frac{R^2}{4L}.$$

$$\therefore\ \frac{1}{C} = \frac{4\omega^2L^2 + R^2}{4L}, \text{ whence } C = \underline{\frac{4L}{R^2 + 4\omega^2L^2}}.$$

(*c*)
$$I = \frac{240}{\sqrt{(40^2 + 4\pi^2 \times 50^2 \times 0{\cdot}1^2)}},$$

$$= \frac{240}{\sqrt{(1600 + 100\pi^2)}} = \underline{4{\cdot}719 \text{ A.}}$$

Q8 *(a) Factorize each of the following into 2 linear factors:*

(i) $9x^2 - 16,$
(ii) $t^2 - 14t + 49,$ *and*
(iii) $7y^2 + 15y + 8.$

(b) Solve the following quadratic equations:

(i) $(2x - 3)^2 = 25,$
(ii) $6y^2 + 5y = 0,$ *and*
(iii) $5t^2 - 2t - 6 = 0.$

(c) An instrument panel is rectangular in shape, the length being 5·0 cm longer than the width. Two circles, each of radius 3·0 cm, are cut out to accommodate the instruments; the remaining part of the panel has an area of 180 cm². Calculate the length and width of the panel.

A8 (*a*) (*i*) $9x^2 - 16 = \underline{(3x - 4)(3x + 4).}$

(*ii*) $t^2 - 14t + 49 = \underline{(t - 7)(t - 7).}$

(*iii*) $7y^2 + 15y + 8 = \underline{(7y + 8)(y + 1).}$

(*b*) (*i*) $(2x - 3)^2 = 25,$ or $2x - 3 = \pm 5.$

$\therefore\ 2x - 3 = 5$ or $2x - 3 = -5,$ whence $x = \underline{4}$ or $\underline{-1}.$

(*ii*) $6y^2 + 5y = 0,$ or $y(6y + 5) = 0.$

$\therefore\ \underline{y = 0}$ or $6y + 5 = 0,$ whence $\underline{y = -5/6.}$

(*iii*) $5t^2 - 2t - 6 = 0.$

$$\therefore\ t = \frac{2 \pm \sqrt{(4 + 120)}}{10} = \frac{2 \pm 11{\cdot}14}{10}.$$

$\therefore\ t = \underline{1{\cdot}314}$ or $\underline{-0{\cdot}914.}$

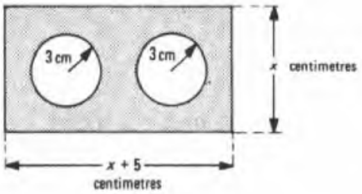

Shaded area = 180 cm²

(*c*) The panel is illustrated in the sketch; let the width of the panel be *x* centimetres, so that the length is *x* + 5 centimetres. The total area of the panel

$= x(x + 5) = 180 +$ twice the area of one circle.

$\therefore\ x^2 + 5x = 180 + 2\pi \times 3^2 = 180 + 56{\cdot}55.$

$\therefore\ x^2 + 5x - 236{\cdot}6 = 0.$

$$\therefore\ x = \frac{-5 \pm \sqrt{(25 + 946{\cdot}4)}}{2} = \frac{-5 \pm 31{\cdot}17}{2},$$

$= \underline{13{\cdot}1 \text{ cm}}$ (the negative answer being inapplicable).

Thus, the length of the panel is $\underline{18{\cdot}1 \text{ cm.}}$

Q9 *(a) The resistance, R ohms, of a coil at temperature T degrees Celsius is given by R = aT + b, where a and b are constants. When T = 120, R = 152; when T = 180, R = 177. Calculate the values of a and b, and hence determine the temperature at which R = 157.*

(b) Calculate the values of the currents I_1 and I_2 which flow as indicated in the network shown in Fig. 4.

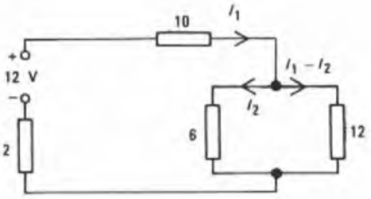

Fig. 4

A9 (*a*) Substituting the 2 sets of values into the given equation yields a pair of simultaneous equations, the solutions of which are $\underline{a = 5/12}$ and $\underline{b = 102.}$

Again substituting values in the given equation yields $\underline{T = 132°\text{C}}$ as the temperature at which $R = 157.$

(*b*) Applying Kirchhoff's second law to the network gives

$$12 = 10I_1 + 6I_2 + 2I_1 = 12I_1 + 6I_2. \quad \ldots\ldots (1)$$

Also, the voltage across each of the 2 resistors in parallel is the same.

$$\therefore\ 6I_2 = 12(I_1 - I_2) = 12I_1 - 12I_2. \quad \ldots\ldots (2)$$

The solution of simultaneous equations (1) and (2) gives

$$\underline{I_1 = 0{\cdot}75 \text{ A}} \text{ and } \underline{I_2 = 0{\cdot}5 \text{ A}}.$$

Q10 *(a) Using tables other than logarithmic tables, determine the values of*

(i) $0{\cdot}2953^2,$ *(ii)* $\sqrt{471{\cdot}3},$ *(iii)* $\dfrac{1}{0{\cdot}6445}.$

MATHEMATICS A 1977 (*continued*)

(b) By suitable approximation and cancelling, determine an estimate of the value of the expression

$$\frac{4{\cdot}93^2 \times \pi \times \sin 82^\circ}{2{\cdot}14^3 \times \sqrt{37{\cdot}42}}.$$

(Do not evaluate the expression by logarithms.)

(c) If $\log(3y - 2) + 2\log 4 = \log(y - 1) + 3$, *and all logarithms are to the base 2, determine the value of y.*

(d) Express the denary number 167 in binary notation.

(e) Evaluate the following, working throughout in binary notation, and convert the results into denary form:

(i) 11 010 × 101, *(ii) 110 111 ÷ 101.*

A10 (*a*) (*i*) $0{\cdot}2953^2 = \underline{0{\cdot}08720}.$

(*ii*) $\sqrt{471{\cdot}3} = \underline{21{\cdot}71}.$ (*iii*) $1/0{\cdot}6445 = \underline{1{\cdot}552}.$

$$(b)\quad \frac{4{\cdot}93^2 \times \pi \times \sin 82^\circ}{2{\cdot}14^3 \times \sqrt{37{\cdot}42}} \approx \frac{5^2 \times 3 \times \sin 90^\circ}{2^2 \times 2{\cdot}5 \times \sqrt{36}},$$

$$= \frac{25 \times 3 \times 1}{4 \times 2{\cdot}5 \times 6} = \underline{1{\cdot}25}.$$

(Note that the approximate value of $2{\cdot}14^3$ is taken as $2^2 \times 2{\cdot}5$ rather than 2^3. This is because the error in the cube of an approximate number is more significant than in its square, and the use of the compensating factor 2·5 facilitates cancellation between the numerator and denominator. The exact evaluation of the expression is 1·26, to 3 significant figures. Using $2{\cdot}14^3 = 8$ gives an approximate evaluation of 1·56.)

(*c*) $\log_2(3y - 2) + 2\log_2 4 = \log_2(y - 1) + 3.$

$\therefore\ \log_2(3y - 2) + \log_2 4^2 - \log_2(y - 1) = 3.$

$\therefore\ \log_2 \dfrac{16(3y - 2)}{y - 1} = 3$, or $\dfrac{16(3y - 2)}{y - 1} = 2^3.$

$\therefore\ 48y - 32 = 8y - 8$, whence $\underline{y = 3/5}.$

(*d*) To express in binary form any number on the denary scale, it is simplest to divide the number successively by the radix 2, the remainder being noted at each division. The remainders are then written down in reverse order to obtain the binary number.

	Remainder
2)167	
83	1
41	1
20	1
10	0
5	0
2	1
1	0
0	1

Thus, $\underline{167_{10} = 10\,100\,111_2}.$

(*e*) (*i*)

$$\begin{array}{r} 11\,010 \\ 101 \\ \hline 11\,010 \\ 1\,101\,000 \\ \hline 10\,000\,010 \end{array}$$

(*ii*)

$$\begin{array}{r} 1\,011 \\ \hline 101)110\,111 \\ 101 \\ \hline 1\,11 \\ 1\,01 \\ \hline 101 \\ 101 \\ \hline 000 \end{array}$$

(For an explanation of the principles of binary arithmetic, see A2 and A3, Computers A 1976, *Supplement*, Vol. 70, p. 21, Apr. 1977.)

Conversion of the results into denary form is carried out by allotting each binary digit its denary weight and summing the weights. Thus,

$$10\,000\,010_2 = 2^1 + 2^7 = 2 + 128 = \underline{130_{10}},$$

and

$$1\,011_2 = 2^0 + 2^1 + 2^3 = 1 + 2 + 8 = \underline{11_{10}}.$$

(Conversion of binary numbers to denary form is explained more fully in A3, Computers A 1975, *Supplement*, Vol. 69, p. 17, Apr. 1976.)

LINE PLANT PRACTICE A 1977

Students were expected to answer any 6 questions.
The use of a pocket calculator was permitted

Q1 (a) What 4 types of telephone exchange would you expect to have in a national telephone network? Explain their functions.

(b) State what names are given to the transmission routes between the different telephone exchanges, and to the subscriber.

(c) What item of plant is used to provide flexibility of connexion in the local network?

(d) What type of cable would be used between the item of plant in (c) and the subscriber?

A1 (*a*) Subscribers' telephones are connected to a *local* telephone exchange. The size of the exchange depends on the number of subscribers in the area that the exchange serves, and on the number and duration of the calls made. In very small communities, it is sometimes desirable to have a small *satellite* exchange linked to a local exchange serving a larger community nearby.

Local exchanges within a group are fully connected to a prominent exchange in that group. This exchange is called the *group switching centre*. It provides facilities such as automatic switching equipment for long-distance (trunk) calls, and assistance operators.

While a number of group switching centres may be interconnected, it is not practical to interconnect all such centres in a country. Switching centres are therefore necessary to carry traffic between some group switching centres. Such exchanges are called *transit switching centres*. Transit switching centres are of 2 kinds: those that are fully interconnected are called *main* switching centres, and those not fully interconnected but serving a broad area are called *district* switching centres.

(*b*) The transmission route between a local exchange and a subscriber's telephone is called the *local network*. That between local exchanges, and between a local exchange and a group switching centre, is called the *junction network*. Routes between group and/or transit switching centres form the *trunk network* (or *main network*).

(*c*) A *cross-connexion cabinet* provides flexibility in the local network.

(*d*) Polyethylene-sheathed polyethylene-insulated petroleum-jelly-protected copper or aluminium twin-conductor cables are used between cross-connexion points and subscribers.

Q2 (a) Describe 5 different methods of pole staying, stating why each is used.

(b) Describe 2 other methods of pole stabilization and state when each would be used.

(c) What is meant by the factor of safety in relation to the conductor tension? What value is used for cadmium copper and what value for covered wires?

A2 See A3 and A7, Line Plant Practice A 1976, *Supplement*, Vol. 70, pp. 17 and 19, Apr. 1977.

Q3 A 50-pair underground cable is to be provided along a country road to serve a group of houses.

(a) Describe what form the planning survey must take.

(b) List the main points that must be studied and the information that must be obtained in each part of the survey.

A3 (*a*) A *preliminary survey* should first be undertaken to determine the feasibility of the scheme. The route should be walked to obtain the necessary information. A *detailed survey* should then be made to determine the method of provision and the physical route to be taken, together with details of factors that will affect the work.

(*b*) The preliminary survey should take account of:

(*i*) the Ordnance Survey map details,
(*ii*) whether duct is required, or whether directly-buried cable can be used,
(*iii*) other undertakers' plant, including lamp standards and land drains,
(*iv*) bridges and railway crossings,
(*v*) entrances to fields that might affect the depth of lay,
(*vi*) trees and tree roots,
(*vii*) the possible need to use private property and, if so, the names of the owners,
(*viii*) the highway authorities concerned,
(*ix*) whether the duct or cable could be moleploughed, and
(*x*) road-widening schemes that might affect the route.

The detailed survey should take account of:

(*i*) the point where the cable is to be linked up with the existing network,

(*ii*) the type of road surface or grass verge,

(*iii*) whether the track can be routed to avoid going too close to a ditch or bank, or too close to the carriageway kerb-line,

(*iv*) the position of jointing points,

(*v*) the position of other undertakers' plant, so that proper clearances can be maintained,

(*vi*) whether extra depth of lay is required,

(*vii*) difficulties likely to be encountered by a moleplough (such as lamp standards or trees), and

(*viii*) whether special tools are required.

Q4 (a) Explain how you would locate accurately a full-earth fault on one conductor in a short length of cable between 2 manholes.

(b) Derive the general formula for calculating the distance from one of the manholes to the fault.

(c) In a circuit where the resistance is 15 Ω/km for a single wire, the loop resistance is 7·5 Ω. Using a suitable bridge test to measure the distance to an earth fault, what is the distance to the fault if the ratio of the bridge is 3:2?

A4 (*a*) Sketch (*a*) shows the circuit used to measure the distance to a full-earth fault on a conductor in a cable (the Murray test).

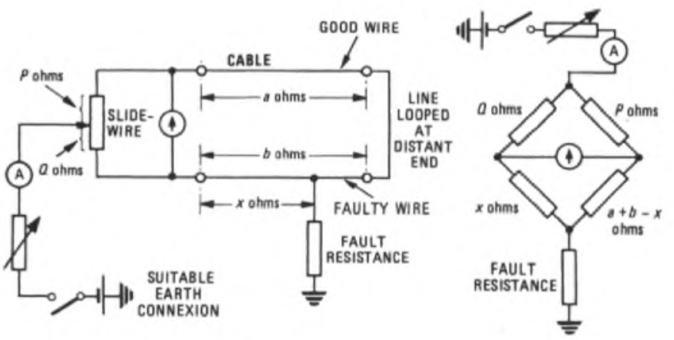

(*a*) (*b*)

The 2 sections of the slide-wire resistance, *P* ohms and *Q* ohms, and the 2 sides of the line loop to the fault, $a + b - x$ ohms and x ohms, form the 4 resistance components of a Wheatstone bridge, as illustrated in sketch (*b*). It can be seen that the fault resistance does not form part of the bridge circuit and, therefore, does not affect the balance conditions. The variable resistor allows control of the testing current.

The faulty wire is looped to a good wire at the distant end. Where possible, at the testing end, the wires are joined directly to the terminals of the slide-wire. If test leads have to be used, they should be as short as possible to avoid introducing errors. Starting with a small value of current, the slide-wire is adjusted until the galvanometer shows no deflexion. The current is then increased as necessary to enable accurate adjustment of the slide-wire.

(*b*) When the bridge is balanced, then

$$\frac{P}{Q} = \frac{a + b - x}{x}.$$

$$\therefore\ Px = Qa + Qb - Qx.$$

$$\therefore\ x(P + Q) = Q(a + b).$$

$$\therefore\ x = \frac{Q(a + b)}{P + Q}\ \text{ohms.}$$

If the resistance per unit length of the conductor is known, the resistance, x ohms, can be converted into a distance measurement.

(*c*) From the given data, $a + b = 7{\cdot}5\ \Omega$, and $P/Q = 3/2$; that is, $P = 3$ when $Q = 2$. Note that P is always greater than Q since $(a + b - x) > x$.

$$\therefore\ x = \frac{2 \times 7{\cdot}5}{3 + 2} = 3\ \Omega.$$

Since the resistance per unit length of the conductor is 15 Ω/km, the distance to the fault $= 3 \times 10^3/15 =$ 200 m.

Q5 (a) State 3 conditions of decay when a wooden pole should be declared dangerous.

(b) State 3 precautions that must be taken by a person when working at the top of a ladder.

(c) When a working area extends into the carriageway, 3 guarding actions must be taken. State what they are. What additional action is required at night?

(d) Describe the principle by which the hand-aspirated type of gas indicator operates.

A5 (*a*) Poles are declared dangerous when

(*i*) internal decay extends more than halfway round the pole,

(*ii*) the average depth of external decay is from one-eighth to one-quarter of the pole's diameter, and extends halfway round the pole, or

(*iii*) the average depth of external decay is more than a quarter of the pole's diameter, and extends a quarter of the way or more round the pole.

(*b*) (*i*) Tools or fittings required when working at the top of a ladder should be carried, or raised and lowered on lines, never thrown.

(*ii*) Care should be taken to see that lines do not foul passing vehicles.

(*iii*) While work is in progress at the top of a ladder, the area about the base of the ladder, into which tools may accidently be dropped, should be kept clear.

(*iv*) Soldering operations carried out at the top of a ladder or pole can be dangerous, so that care must be taken to see that injury is not caused by falling solder.

(*v*) Ladders must always be erected on a firm base and at the correct angle, and should be lashed to their supports.

(*vi*) When working on a pole, a safety belt must always be worn.

(*c*) (*i*) A temporary kerb-line should be formed using cones.

(*ii*) Road-works warning signs should be erected.

(*iii*) A KEEP RIGHT sign should be erected.

At night, lamps should be placed between the cones.

(*d*) An instrument suitable for detecting the presence of explosive gas is the battery-operated combustion-type detector. Using an aspirator bulb, a sample of air is drawn into the detector and passed over a filament that is electrically heated to approximately 600°C. If the sample is an explosive gas-air mixture, the gas burns, thereby further raising the temperature of the filament. The filament is arranged as one of the resistance arms of a Wheatstone bridge, and any change in resistance due to a rise in temperature can be measured. The change in resistance is indicated on a meter calibrated in terms of the concentration of the explosive gas.

Q6 (a) Describe the procedure, step by step, for hand crimp-jointing 2 polyethylene-insulated audio cables after the cables have been opened and prepared.

(b) Describe a crimp-connector used for making a hand-crimped joint.

(c) State how a correct joint in a hand-crimped joint is ensured.

A6 (*a*) (*i*) The appropriate pair is selected from each cable.

(*ii*) The 4 wires are twisted together for one complete turn approximately 30 mm from the end of the jointing gap.

(*iii*) This is repeated for each pair, with succeeding twists spaced at 30 mm intervals across the gap.

(*iv*) All conductors are cut about 25 mm from the twist.

(*v*) Each group of 4 conductors is separated into A-wires and B-wires.

(*vi*) A crimp connector is put on each pair of A-wires and B-wires.

(*vii*) When all the connectors are fitted, the joints are completed using crimping pliers.

(*viii*) The crimps are folded back against the conductors.

(*ix*) The process is completed until the cable is fully jointed.

(*b*) The connector consists of an inner serrated phosphor-bronze sleeve inserted into an outer brass sleeve, which in turn is enclosed in and insulated by a plastic sleeve. The connector is closed at one end, and is filled with petroleum jelly. The conductors are inserted into the

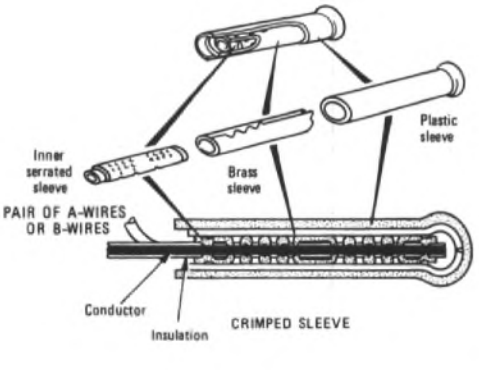

open end, and the joint effected by compressing the crimp onto the conductors with a special pair of pliers. This forces the serrations on the inner sleeve through the insulation into the metal of the conductors. The outer brass sleeve is deformed and thus maintains pressure on the conductors. The sketch illustrates a connector.

(*c*) (*i*) The correct crimp-connector must be used for the type and size of conductors.

(*ii*) The gap setting of the special crimping pliers must be checked with a gauge.

(*iii*) In operation, the pliers must be closed until a ratchet device releases them.

Q7 (*a*) *State 4 different methods of sheath closure for cable joints, and the types of cable on which they are used.*

(*b*) *Describe the making of a taped sheath closure for an in-line joint between 2 cables.*

(*c*) *What types of cable are currently used for* (*i*) *the main local network as far as the cabinets, and* (*ii*) *the distribution network between the cabinets and the subscribers?*

A7 (*a*) Six methods of sheath closure, and the types of cable on which they are used, are:

(*i*) lead-plumbing of lead sleeves on all lead-sheathed cables,

(*ii*) epoxy-resin-sealed cap-ended sleeves on polyethylene-sheathed cables,

(*iii*) expoxy-plumbed polyethylene sleeves on polyethylene-sheathed cables of all sizes,

(*iv*) tape-sealed polyethylene sleeves on small polyethylene-sheathed unpressurized cables,

(*v*) injection-welding of polyethylene sleeves on polyethylene-sheathed cables, and

(*vi*) temporary closure of lead and polyethylene cables using self-adhesive rubber sheets.

(*b*) (*i*) The cable ends are set up for jointing.

(*ii*) The sheath is cleaned with a rag moistened with methylated spirit.

(*iii*) The tapered nozzles of the polyethylene collars are cut to ensure a tight fit over the cables, and are then fitted over the cable ends.

(*iv*) A polyethylene sleeve is passed over one of the cables, and set to one side of the joint away from the jointing position.

(*v*) The cables are marked to indicate the jointing gap, and the sheaths are removed.

(*vi*) After jointing has been carried out, the sleeve is placed centrally over the completed joint.

(*vii*) The collars are moved along the cables and inserted into the ends of the sleeve.

(*viii*) To ensure that there are no longitudinal score marks on the cable, collars or sleeve (which could allow water to seep into the joint), the taping surfaces are smoothed with glass paper for a distance of 50 mm each side of the collars.

(*ix*) Each end of the joint is wrapped with self-amalgamating tape, applied with a light tension and with a 50% overlap.

(*x*) Over this tape is applied an adhesive plastic tape, also with a 50% overlap. This tape is applied tightly to compress the self-amalgamating tape to ensure that it gives a good seal.

(*c*) (*i*) In the main local network, paper-insulated polyethylene-sheathed unit-twin cables are used, protected by pressurization.

(*ii*) In the local distribution network, polyethylene-insulated polyethylene-sheathed pair-type petroleum-jelly-filled cables are used.

Q8 (*a*) *Describe a pole-erection-unit vehicular mechanical aid, and explain how it is used.*

(*b*) *Name 3 other mechanical aids used on overhead or underground cabling work.*

A8 (*a*) The pole-erection equipment is mounted on the chassis of a 4-wheel-drive diesel truck, and is completely hydraulically-powered. The unit comprises a rotating derrick mounted on the near-side rear corner of the vehicle. The derrick rotates through 360°, and can be raised to 80° above and 15° below the horizontal. The boom of the derrick is 4·1 m long from the centre of rotation to the auger, and has a centre section approximately 2·4 m long, called a *stinger*, which can increase the length to approximately 6·3 m. The auger is driven by a hydraulic motor. When not in use, the auger is folded back and stowed alongside the main derrick. This is done by attaching a steel stowing wire to the auger shaft and rotating the auger.

A hydraulic-motor-driven winch is mounted at the very end of the derrick, and is capable of lifting a load of 400 kg at the maximum radius, and 2000 kg at the minimum radius of approximately 1·8 m. Before the derrick is moved, the vehicle is stabilized by means of a hydraulic outrigger at the rear corner adjacent to the derrick, and a simple hydraulic jack fitted to the opposite side. Associated with the unit is a punner and a pole jack, and external hydraulic outlets with quick couplings are provided to supply power for these tools. The hydraulic controls for operating the equipment are situated at the rear of the vehicle. The unit is operated by 2 men, and has been designed to carry up to 9 poles (See sketch.)

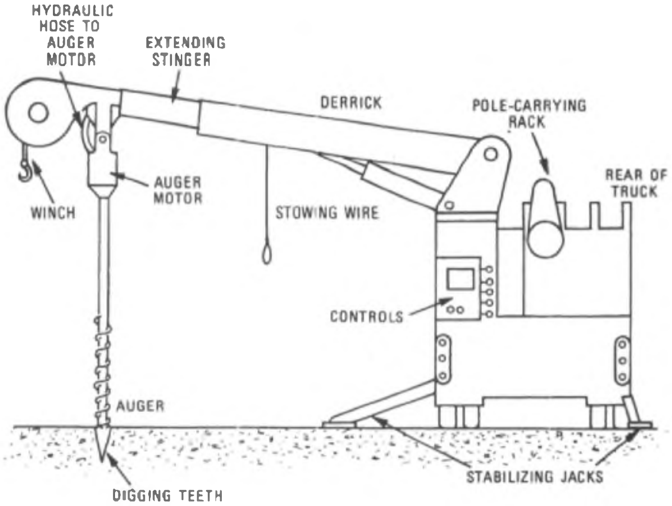

Having located the position in which it is desired to erect a pole, and having tested for the absence of other services, the vehicle is made steady by means of the stabilizing jacks. The required pole is off-loaded to a convenient position and dressed. The auger is lowered into position and lined up over the site of the proposed hole. Vertical alignment is maintained by adjustment of the stinger during boring. The auger is rotated while a steady downward pressure is applied to it by lowering the derrick in small steps. After the hole has been bored, the auger is cleaned and stowed on the derrick. The pole is placed in position by using the derrick as a crane. The earth is compacted round the pole by the mechanical punner.

(*b*) Other mechanical aids available include: an aerial cabling unit, an elevating platform, a rodding and light-cabling vehicle, a heavy cabling unit, and a thrust borer.

Q9 (*a*) *With the aid of sketches, describe the 2 basic methods of supporting loading pots on the poles of an aerial cable route.*

(*b*) *What 2 methods of joint closure and joint support are used in aerial cabling where a separate suspension strand is used with cables lashed to it?*

(*c*) *When is it necessary to use a separate suspension wire to support an aerial cable?*

Q10 (*a*) *For what purposes are jointing chambers used?*

(*b*) *What materials are used in their construction?*

(*c*) *What types of duct are commonly used between jointing chambers?*

(*d*) *What type of duct would normally be used at shallow depth?*

(*e*) *Briefly describe how the trench of a duct route in a grass verge should be back-filled.*

(*f*) *Why is it necessary to use a temporary reinstatement when constructing a duct track in the carriageway?*

(*g*) *When casting the concrete floor of a joint box or manhole, how is the thickness of concrete determined?*

A10 (*a*) Cables cannot be produced, transported or installed in exceptionally long lengths. It is therefore necessary to joint cables at points along the cable route. It is normal practice to provide manholes or joint boxes to house the joints. Jointing chambers provide access to the cables and joints for the purpose of testing for fault conditions, including pressure testing. Loading coils or amplifiers can be housed. By virtue of anchor irons and suitable rigging, cabling can be undertaken, including the renewal of existing cables.

(*b*) Materials used in the construction of jointing chambers are: reinforced concrete, brick (together with concrete slabs), and glass-reinforced cement.

(*c*) Commonly-used ducts are 90 mm bore earthenware and PVC.

(*d*) Steel duct, commonly of 100 mm bore, is used at shallow depth.

(*e*) (*i*) Soil layers should be replaced in reverse order to that in which they were removed.

(*ii*) Earth free from stones should first be placed to a depth of 75 mm above the duct and firmed down by hand.

(*iii*) Further layers of soil should be replaced in 250 mm bands and firmly punned.

(*iv*) The turf should be replaced.

(*v*) The surface should be left slightly raised to allow for settlement.

(*f*) Temporary reinstatement allows for consolidation of the back-fill (settlement) before a permanent reinstatement is made.

(*g*) The thickness of concrete is determined by setting wooden pegs in the soil, so levelled that, when concrete has been placed to the top of the pegs, the required thickness is obtained. The pegs are removed before the concrete sets.

COMPUTERS A 1977

Students were expected to answer any 6 questions

Q1 (a) Compile a list to compare the principles of operation of digital and analogue computers.

(b) With the aid of sketches, illustrate how the equation $q = 5 + 4 - 2$ would be solved on

(i) an analogue computer, and

(ii) a digital computer.

A1 (*a*) See A1, Computers A 1974, *Supplement*, Vol. 68, p. 29, Apr. 1975. In a digital computer, the input is usually via a keyboard, magnetic tape, paper tape or a card-reader. A wide range of output devices exists for the display of numerical, alphabetical and diagrammatical information. In an analogue computer, input conditions are set by adjusting potentiometers (thus allowing real-time operation), and the output is produced in graphical form, again in real time.

(*b*) (*i*) The equation is solved on an analogue computer by using the arrangement shown in sketch (*a*) of A8, Computers B 1975, *Supplement*, Vol. 69, p. 54, Oct. 1976. Analysis of the circuit shows that the output, y, is given by

$$y = \left(\frac{x_1}{R_1} + \frac{x_2}{R_2} + \frac{x_3}{R_3}\right) \times R_f.$$

Choosing suitable resistance values such that $R_1 = R_2 = R_3 = R_f$, and setting the input voltages x_1, x_2 and x_3 to $+5$ V, $+4$ V and -2 V respectively yields the solution to the given equation, with q being given by the magnitude of the output voltage, y.

(*ii*) In a digital computer, the values 5, 4 and 2 are stored in locations A, B and C respectively. The relevant instructions are also stored, as shown in the sketch.

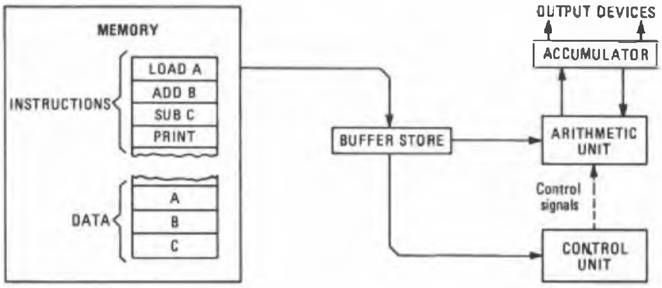

The instructions are decoded and obeyed in turn. The instruction LOAD A causes the content of store location A to be transferred to the accumulator. Instruction ADD B causes the content of store location B to be added to that of the accumulator, and the result is stored in the accumulator. Similarly, SUB C causes the content of store location C to be subtracted. The accumulator then contains the result, q, of the equation $5 + 4 - 2$, and the instruction PRINT transfers the result to an appropriate output device.

Q2 The quantities A, B and C have the following binary values:

$$A = 101\,000, \quad B = 11\,010\,010, \quad C = 100\,011.$$

Perform the following calculations in binary arithmetic, and convert the final results into denary form. Show all working.

$$(a)\ A + B - C, \qquad (b)\ \frac{A \times B}{C}.$$

A2 (*a*) The given binary numbers can be stored as 000 101 000, 011 010 010 and 000 100 011. This assumes a word length of 9 bit, where the most significant bit is used to indicate the sign of the number, and is called the *sign bit*. If the sign bit is 0, the number is positive; if the sign bit is 1, the number is negative.

A:	000 101 000
B:	011 010 010 +
$A + B$:	011 111 010

The subtraction of C from $A + B$ can be achieved by creating the negative of C and adding it to $A + B$. A negative number can be stored in a form known as *two's complement*. Each 1 is replaced by a 0, and each 0 is replaced by a 1 to create the *one's complement*; the two's complement is created by adding 1 to the one's complement, as shown below.

C:	000 100 011
One's complement of C:	111 011 100
Add 1:	1 +
$-C$:	111 011 101

The process of creating the two's complement automatically gives the correct sign bit. To obtain the required result, $-C$ is added to $A + B$, as shown below.

$A + B$:	011 111 010
$- C$:	111 011 101 +
$A + B - C$:	1 011 010 111

The most significant bit is lost since it is outside the word length used. Thus, the binary result is 011 010 111. (The sign bit indicates that the result is positive.)

The result can be converted into denary form by multiplying each digit by its weight and summing the results, as follows.

$$\begin{aligned} 11\,010\,111_2 &= 1 \times 2^7 + 1 \times 2^6 + 0 \times 2^5 + 1 \times 2^4 \\ &\quad + 0 \times 2^3 + 1 \times 2^2 + 1 \times 2^1 + 1 \times 2^0, \\ &= 128 + 64 + 16 + 4 + 2 + 1 = \underline{215_{10}}. \end{aligned}$$

(*b*) Binary multiplication can be carried out using a successive shifting-and-adding technique, as shown below.

Multiplicand (B):	011 010 010
Multiplier (A):	000 101 000 ×
Copy multiplicand, shifted 3 places	011 010 010 000
Copy multiplicand, shifted 5 places	01 101 001 000 000 +
Product ($A \times B$):	10 000 011 010 000

Binary division can be carried out by a successive shifting-and-subtracting technique, as shown below.

Quotient $\{(A \times B) \div C\}$: 11 110 000

$$\begin{array}{lr} \text{Divisor and dividend:} & 100\,011\,)\,10\,000\,011\,010\,000 \\ & 01\,000\,11 \\ \hline & 00\,111\,101 \\ & 100\,011 \\ \hline & 011\,010\,0 \\ & 10\,001\,1 \\ \hline & 01\,000\,11 \\ & 1\,000\,11 \\ \hline & 0\,000\,00 \end{array}$$

Thus, the binary result is 11 110 000.

$$\begin{aligned} 11\,110\,000_2 &= 1 \times 2^7 + 1 \times 2^6 + 1 \times 2^5 + 1 \times 2^4, \\ &= 128 + 64 + 32 + 16 = \underline{240_{10}}. \end{aligned}$$

Q3 (a) With the aid of sketches, explain the operation of an astable device such as would be used in a digital computer.

(b) Describe 2 applications of astable devices in computer systems.

A3 See A5, Computers B 1975, *Supplement*, Vol. 69, p. 54, Oct. 1976.

Q4 (a) Explain the circumstances in which parity checks are used and the reasons for using them.

(b) Devise a binary code for the numbers 0 to 9 and add a parity bit to the code to provide for

(i) even parity, and

(ii) odd parity.

(c) How can the parity bit be removed from the input word after the check has been carried out?

A4 (*a*) A parity check is a test of whether the number of ONES (or ZEROS) in an array of binary digits is odd or even.

Various codes of binary digits can be devised to represent information, and these digits may be manipulated by and stored in computers and telecommunications systems. During the process of manipulation, or transmission over a circuit, it is possible for a hardware item (such as a gate) to fail, with the consequent loss of a digit of binary data. The system is unable to recognize the loss of that digit, so that an incorrect character is passed through the system. In storage devices, environmental conditions may cause a binary number to be altered by the erasure (or possibly creation) of a digit. For example, a magnetic tape could suffer loss of a binary digit from a character due to foreign matter adhering to part of a recording head during a READ or WRITE sequence.

A *parity bit* can be added to a data word to assist in the detection of a corrupted character. The extra (parity) digit is included in the code before the character enters a situation in which it could suffer corruption, and is removed after the hazardous situation has been passed.

The value of the parity bit is determined by whether odd or even parity is chosen. For odd parity, the parity bit is set so that the number of ONES in the character is odd. For even parity, the parity bit is set so that the number of ONES in the character is even.

It is a fairly simple operation to test, on arrival of a character, that the number of bits is odd or even in accordance with the convention chosen.

(*b*) An arbitrary 4 bit binary code for the numbers 0 to 9, with even and odd parity bits, is shown below. In each case, the parity bit is joined to the code so that it occupies the least significant position.

Number	Binary Code	Even Parity Bit	Odd Parity Bit
0	0001	1	0
1	0010	1	0
2	0100	1	0
3	1000	1	0
4	1001	0	1
5	1010	0	1
6	1100	0	1
7	1101	1	0
8	1110	1	0
9	1111	0	1

5 bit code, even parity

– – – – 5 bit code, odd parity – – – –

(*c*) To remove the parity bit, the 5 bit word can be loaded into a 5 bit shift register. A to-the-right shift then causes the parity bit to be lost.

Q5 Draw a Venn diagram, write a Boolean expression and sketch a simple logic diagram for each of the following Karnaugh maps.

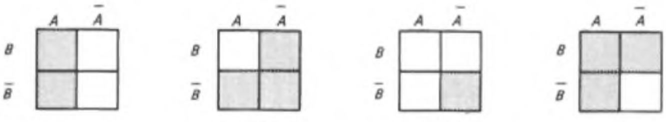

(*i*) (*ii*) (*iii*) (*iv*)

A5 Boolean expressions (*F*), Venn diagrams and logic diagrams for each of the Karnaugh maps are given below.

$F = A.$ $\quad F = \bar{A} + \bar{B},\ = \overline{AB}.$ $\quad F = \bar{A}\bar{B},\ = \overline{A + B}.$ $\quad F = A + B.$

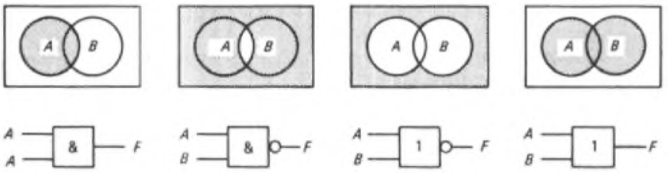

(*i*) (*ii*) (*iii*) (*iv*)

Q6 (a) A digital computer, which has a serial arithmetic unit, is programmed to add together 2 binary numbers held in store, and to output the result. With the aid of a block diagram, explain the sequence of operation and the movement of data within the computer for this function.

(b) Describe briefly the relationship between the size of the binary numbers and the speed of operation of the serial arithmetic unit.

Q7 (a) Give the 3 main reasons why flow charts are important when writing programs.

(b) Using a flow chart and a machine code of your choice, write a program to input 30 numbers and sum separately

(i) the odd numbers,
(ii) the even numbers, and
(iii) the negative numbers (odd or even).

Output the 3 results once all the numbers have been input. Give a key to your code.

A7 (*a*) A flow chart is a diagrammatic representation of a logical process. Flow charts are used

(*i*) to illustrate how a particular problem may be solved,
(*ii*) as an aid to program debugging and checking for logical errors, and
(*iii*) to assist program documentation.

(*b*) The flow chart is shown in Fig. 1. Table 1 gives a machine code that could be used to write a program to perform the flow chart's function, and a program using these instructions is shown in Table 2.

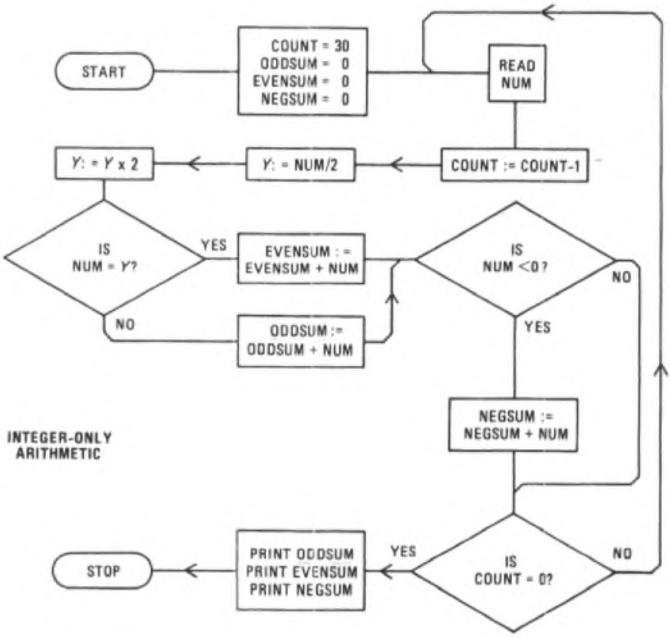

ODDSUM: Sum of odd numbers
EVENSUM: Sum of even numbers
NEGSUM: Sum of negative numbers
NUM: Next number

Fig. 1

The method of solution adopted assumes that integer-only arithmetic is used.

Table 1

Instruction	Function
LDA N	Load content of location N into accumulator
STR N	Store content of accumulator in location N
ADD N	Add content of location N to content of accumulator, leaving result in accumulator
SUB N	Subtract content of location N from content of accumulator, leaving result in accumulator
MULT N	Multiply content of accumulator by content of location N, leaving result in accumulator
DIV N	Divide content of accumulator by content of location N, leaving result in accumulator
JMP N	Jump unconditionally to address N
JNE N	Jump to address N if content of accumulator is not equal to zero
JGE N	Jump to address N if content of accumulator is greater than or equal to zero
READ	Read next number from input device into accumulator
PRINT	Print content of accumulator via output device
START	Start program
STOP	Stop program

Table 2

Label	Program	Comment
		Let location 62 hold odd sum
		Let location 63 hold even sum
		Let location 64 hold negative sum
		Let location 60 hold the value 30
		Let location 61 hold the value 2
		Let location 65 hold the value 0
		Let location 66 hold the value 1
	START	
L4	READ	Reads number
	STR 65	Stores number in location 65
	LDA 60	Loads counter
	SUB 66	Decrements counter
	STR 60	Returns decremented counter to store
	LDA 65	Loads number
	DIV 61	Divides number by 2 (integer result only permissible)
	MULT 61	Multiplies result by 2
	SUB 65	Subtracts original number
	JNE L1	If number is odd, jumps to L1
	LDA 63	Loads even sum
	ADD 65	Adds number to even sum
	STR 63	Returns new even sum to store
	JMP L2	Jumps to L2
L1	LDA 62	Loads odd sum
	ADD 65	Adds number to odd sum
	STR 62	Returns new odd sum to store
L2	LDA 65	Loads number
	JGE L3	If number greater than or equal to zero, jumps to L3
	LDA 64	Loads negative sum
	ADD 65	Adds number to negative sum
	STR 64	Returns new negative sum to store
L3	LDA 60	Loads counter
	JNE L4	If counter is not zero, jumps to L4
	LDA 62	Loads odd sum
	PRINT	Prints odd sum
	LDA 63	Loads even sum
	PRINT	Prints even sum
	LDA 64	Loads negative sum
	PRINT	Prints negative sum
	STOP	

Q8 (*a*) *With the aid of a carefully drawn and well labelled sketch of the hysteresis loop of a typical ferrite core, explain how the core may be used to store a binary digit.*

(*b*) *How many such cores would be found in an 8 k 16 bit word-length core store?*

A8 (*a*) See A6, Computers A 1974, *Supplement*, Vol. 68, p. 30, Apr. 1975.

(*b*) In computer terminology, an 8 k 16 bit word-length core store denotes a store capable of storing 8 kilowords, with each word consisting of 16 bit.

It should also be noted that, in binary arithmetic, the prefix *kilo* does not mean 1000, but is taken as $2^{10} = 1024$, which is the nearest weighted radix to 1000.

A ferrite core can store 1 bit, so that the total number of cores in the store is

$$8 \times 1024 \times 16 = \underline{131\,072.}$$

Q9 (*a*) *Explain what is meant by the following:*

(*i*) *reliability,*
(*ii*) *failure rate, and*
(*iii*) *mean time between failures.*

(*b*) *Sketch a typical bath-tub diagram and explain why the curve is that shape.*

(*c*) *How do the tolerance requirements of components compare for analogue and digital computers?*

A9 (*a*) (*i*) Reliability refers to the ability of a functional device to perform its intended function under stated conditions for a specified period.

The reliability of a device is governed by statistical assumptions made about it and its component parts, and based on its design and construction. Within the limits of the statistical assumptions, the device can be *relied* on to perform in a prescribed manner.

(*ii*) Failure rate is a measure of the expectance of failure of similar items produced under similar conditions.

A large number of items can be constructed and, given design and constructional details, an assessment can be made of the rate at which items in that group will fail. The group life can then be estimated from the failure rate and number of items.

(*iii*) Mean time between failures (MTBF) is the mean value of the lengths of time between consecutive failures under stated conditions for a stated period in the life of a functional unit.

When a device fails, the MTBF is the time after repair which will elapse before the next failure of the same device occurs. An item can be designed to have a specified MTBF, and maintenance schedules and spares quantities can be estimated from the MTBF to provide the best possible service life.

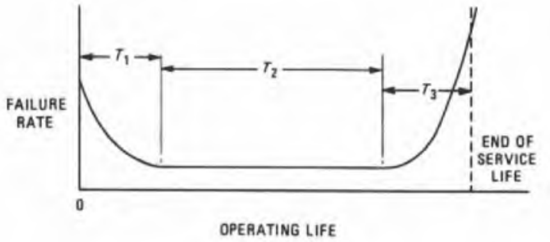

(*b*) A typical bath-tub diagram is shown in the sketch.

When a device goes into service, there can be initial failures due to constructional and component irregularities. (These *installation* failures contain a percentage of real faults; that is, real in the sense that they are not caused by installation or adjustment.) Eventually, after a time T_1, the failure rate decreases to a minimum level determined by the design and structure of the device and its component parts. The period T_2 denotes the period of lowest failure rate, when the minimum amount of maintenance is needed. Preventative maintenance may be carried out during T_2 to keep the level of failures to a minimum. It is possible for such maintenance to cause a series of small bath tubs because of interference with the device, such as replacing contacts or disc-drive bearings.

As components age, the failure rate starts to increase and, during T_3, failures increasingly occur. The rise can be over a protracted period, and the economics of maintenance finally determine the useful limit of the service life.

(*c*) The accuracy of analogue computing is limited partly by the accuracy of the values of the components, which can be made only within certain tolerances. In particular, resistors and capacitors must have values with very small variations resulting from manufacture. In addition, they must have high stability and low temperature coefficients to maintain these values over long periods and under different operating conditions.

The accuracy of digital computing is governed to a large extent by component tolerances which dictate noise immunity and switching speeds. A gate in an integrated circuit could lose a binary digit as a result of poor noise immunity, or as a consequence of slow rise time when responding to a fast pulse train.

Q10 *Draw the circuit diagram of a diode-transistor 3-input* NAND *gate which uses positive logic. With the aid of voltage and truth tables, explain its operation.*

A10 The circuit diagram of a diode-transistor 3-input NAND gate using positive logic is shown in the sketch.

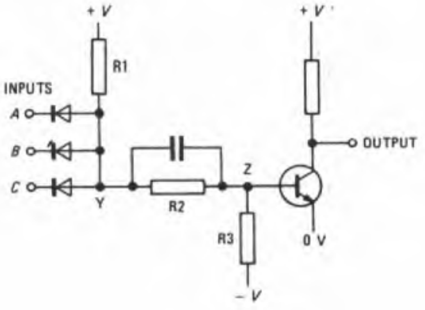

COMPUTERS A 1977 *(continued)*

If any or all of the inputs have a potential of 0 V, then current flows in resistor R1 and the forward-biased diode(s). The voltage at point Y is then about 0 V. Resistors R2 and R3 thus create a negative voltage at point Z, so that the transistor is OFF. The output is therefore about $+V$ volts. Thus, logic state ZERO on one or more inputs results in logic state ONE on the output.

If all 3 inputs are at $+V$ volts, then all the diodes are reverse biased. Resistors R1, R2 and R3 now give a positive voltage at point Z, and the transistor is turned ON. The output is then about 0 V.

From this analysis, the following voltage table can be set up, and a truth table established from it. (For positive logic, 0 V = logic state ZERO and $+V$ volts = logic state ONE.)

The truth table shows that the gate performs the NAND function.

Voltage Table

Inputs (V) *A*	 *B*	 *C*	Output (V)
0	0	0	$+V$
$+V$	0	0	$+V$
0	$+V$	0	$+V$
$+V$	$+V$	0	$+V$
0	0	$+V$	$+V$
$+V$	0	$+V$	$+V$
0	$+V$	$+V$	$+V$
$+V$	$+V$	$+V$	0

Truth Table

Inputs A	 B	 C	Output
0	0	0	1
1	0	0	1
0	1	0	1
1	1	0	1
0	0	1	1
1	0	1	1
0	1	1	1
1	1	1	0

MATHEMATICS B 1977

Students were expected to answer any 6 questions.
The use of electronic pocket calculators was permitted

Q1 (*a*) *Solve for x and y to 2 significant figures:*

$$3{\cdot}5x - 1{\cdot}9y = 14{\cdot}28, \qquad \ldots\ldots (1)$$

$$4{\cdot}1x + 1{\cdot}3y = 1{\cdot}92. \qquad \ldots\ldots (2)$$

(*b*) *Rearrange the quadratic expression* $5 + 4x - 3x^2$ *in the form* $c - a(x - b)^2$, *where a, b and c are constants. Hence determine its maximum or minimum value.*

A1 (*a*) Multiplying equation (1) by 1·3, and equation (2) by 1·9, gives

$$4{\cdot}55x - 1{\cdot}9 \times 1{\cdot}3y = 18{\cdot}564, \qquad \ldots\ldots (3)$$

and

$$7{\cdot}79x + 1{\cdot}9 \times 1{\cdot}3y = 3{\cdot}648. \qquad \ldots\ldots (4)$$

Adding equations (3) and (4) gives

$$12{\cdot}34x = 22{\cdot}212.$$

$$\therefore\ \underline{x = 1{\cdot}8} \text{ to 2 significant figures.}$$

Substituting for x in equation (2) gives

$$1{\cdot}3y = 1{\cdot}92 - 4{\cdot}1 \times 1{\cdot}8 = -5{\cdot}46.$$

$$\therefore\ \underline{y = -4{\cdot}2} \text{ to 2 significant figures.}$$

(*b*) Let

$$\begin{aligned} y &= 5 + 4x - 3x^2, \\ &= 5 - (3x^2 - 4x), \\ &= 5 - 3\left(x^2 - \frac{4x}{3} + \frac{4}{9} - \frac{4}{9}\right), \\ &= 5 - 3\left\{\left(x - \frac{2}{3}\right)^2 - \frac{4}{9}\right\}, \\ &= \underline{6\tfrac{1}{3} - 3\left(x - \frac{2}{3}\right)^2}. \end{aligned}$$

Since $\{x - (2/3)\}^2$ is a square, its smallest value is zero, and occurs when $x = 2/3$. As the term containing $\{x - (2/3)\}^2$ is negative, a maximum value of y must occur when the term has its smallest value.

$$\therefore\ \underline{y_{\max} = 6\tfrac{1}{3}}.$$

Q2 *The resonant frequency, f hertz, of a tuned circuit comprising inductance L henrys, capacitance C farads and resistance R ohms is given by*

$$f = \frac{1}{2\pi}\sqrt{\left(\frac{1}{LC} - \frac{R^2}{L^2}\right)}.$$

(*a*) *Make R the subject of this formula.*

(*b*) *Calculate, for an inductance of 7·2 mH and a capacitance of 2 μF,*

(*i*) *the approximate resonant frequency, assuming R to be negligible, and*

(*ii*) *the value of R required to give a resonant frequency of 1320 Hz.*

A2 (*a*) Squaring the formula gives

$$f^2 = \frac{1}{4\pi^2}\left(\frac{1}{LC} - \frac{R^2}{L^2}\right).$$

$$\therefore\ 4\pi^2 f^2 = \frac{1}{LC} - \frac{R^2}{L^2}.$$

$$\therefore\ \frac{R^2}{L^2} = \frac{1}{LC} - 4\pi^2 f^2.$$

$$\therefore\ \frac{R}{L} = \sqrt{\left(\frac{1}{LC} - 4\pi^2 f^2\right)}.$$

$$\therefore\ \underline{R = L\sqrt{\left(\frac{1}{LC} - 4\pi^2 f^2\right)}}.$$

(*b*) (*i*) When R is negligible,

$$f \approx \frac{1}{2\pi}\sqrt{\left(\frac{1}{LC}\right)} = \frac{1}{2\pi}\sqrt{\left(\frac{1 \times 10^9}{7{\cdot}2 \times 2}\right)} = \underline{1326{\cdot}3 \text{ Hz.}}$$

(*ii*) From part (*a*),

$$\begin{aligned} R &= 7{\cdot}2 \times 10^{-3}\sqrt{\left(\frac{10^9}{7{\cdot}2 \times 2} - 4\pi^2 \times 1320^2\right)}, \\ &= \underline{5{\cdot}84\ \Omega.} \end{aligned}$$

Q3 *The traffic accidents per day in a town were recorded, with the following results for the year.*

No. of accidents in one day (x)	*0*	*1*	*2*	*3*	*4*
No. of days in which this occurred (y)	*256*	*76*	*23*	*8*	*2*

(*a*) *By plotting a straight-line graph, show that these figures follow closely the decaying exponential relationship* $y = ae^{-kx}$.

(*b*) *From the graph, estimate values for the constants a and k.*

A3 (*a*) Taking logarithms to base e:

$$\log_e y = \log_e a - kx.$$

The relationship is now in the linear form $y = mx + c$. Plotting $\log_e y$ against x should therefore yield a straight-line graph. The required values are tabulated below.

x	0	1	2	3	4
y	256	76	23	8	2
$\log_e y$	5·545	4·331	3·136	2·079	0·693

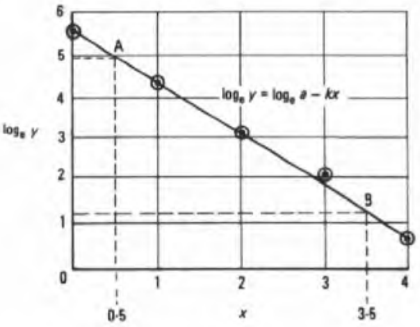

The graph is shown in the sketch, from which it can be seen that a straight line can be drawn to pass through or close to all the plotted points. Hence, the given data must satisfy the law $y = ae^{-kx}$.

(*b*) When $x = 0$, $\log_e y = \log_e a$.

$\therefore\ \log_e a = 5{\cdot}545$, whence $\underline{a = 256.}$

The gradient, $-k$, of the straight line is obtained from the co-ordinates of 2 widely-separated points, A and B, which actually lie on the graph. From the sketch,

$$-k = \frac{1{\cdot}2 - 4{\cdot}9}{3{\cdot}5 - 0{\cdot}5} = -1{\cdot}23.$$

$$\therefore\ \underline{k = 1{\cdot}23.}$$

Q4 (*a*) *From the definition of a logarithm, show that*

$$\log_{10} m - \log_{10} n = \log_{10}(m/n).$$

(*b*) *Using logarithms to base 10 only, evaluate*

(*i*) *$\log_2 25$, and*
(*ii*) *$\log_e 0{\cdot}80$ to 3 significant figures.*

(*c*) *Check the value for $\log_e 0{\cdot}80$ obtained in (b) using the series*

$$\log_e(1 + x) = x - \frac{x^2}{2} + \frac{x^3}{3} - \frac{x^4}{4} + \ldots$$

A4 (*a*) Let $\log_{10} m = p$ and $\log_{10} n = q$. Then, by definition, $m = 10^p$ and $n = 10^q$.

$$\therefore\ \frac{m}{n} = \frac{10^p}{10^q} = 10^{p-q}.$$

$$\therefore\ \log_{10}(m/n) = p - q = \underline{\log_{10} m - \log_{10} n.} \qquad \text{QED}$$

(*b*) (*i*) $\log_2 25 = \log_{10} 25 \times \log_2 10,$

$$= \frac{\log_{10} 25}{\log_{10} 2} = \frac{1{\cdot}3979}{0{\cdot}3010} = \underline{4{\cdot}644.}$$

(*ii*) $\log_e 0{\cdot}80 = \dfrac{\log_{10} 0{\cdot}80}{\log_{10} e},$

$$= \frac{\bar{1}{\cdot}9031}{0{\cdot}4343} = \frac{-0{\cdot}0969}{0{\cdot}4343} = \underline{-0{\cdot}223.}$$

(*c*) $\log_e 0{\cdot}8 = \log_e(1 + x) = \log_e(1 - 0{\cdot}2),$

$$\approx -0{\cdot}2 - \frac{0{\cdot}2^2}{2} - \frac{0{\cdot}2^3}{3} - \frac{0{\cdot}2^4}{4} \ldots,$$

$$= -0{\cdot}2 - 0{\cdot}02 - 0{\cdot}002\dot{6} - 0{\cdot}0004 \ldots,$$

$$= -0{\cdot}2230\dot{6}, \text{ neglecting terms beyond } -x^4/4.$$

The term in x^5 will affect only the fifth decimal place. Hence, to 3 significant figures, the answer of $\underline{-0{\cdot}223}$ agrees with the value obtained in part (*b*).

Q5 Two hooks, P and Q, are fixed 4·6 m apart in a horizontal beam, and steel cables OP and OQ support a load at O. If OP = 2·2 m and OQ = 3·1 m, calculate

(*a*) *angles OPQ and OQP, and*
(*b*) *the depth of O below the beam.*

A5 The arrangement is shown in the sketch; OD is the perpendicular from O to PQ.

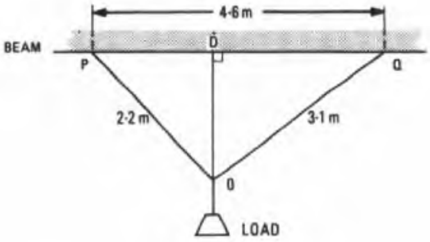

(*a*) From the cosine rule,

$$\cos\angle\text{OPQ} = \frac{\text{PQ}^2 + \text{OP}^2 - \text{OQ}^2}{2 \times \text{PQ} \times \text{OP}},$$

$$= \frac{4{\cdot}6^2 + 2{\cdot}2^2 - 3{\cdot}1^2}{2 \times 4{\cdot}6 \times 2{\cdot}2} = 0{\cdot}8098.$$

$$\therefore\ \underline{\angle\text{OPQ} = 35^\circ\ 55'.}$$

From the sine rule,

$$\frac{\sin\angle\text{OQP}}{\text{OP}} = \frac{\sin\angle\text{OPQ}}{\text{OQ}}.$$

$$\therefore\ \sin\angle\text{OQP} = \frac{2{\cdot}2 \sin 35^\circ\ 55'}{3{\cdot}1} = 0{\cdot}4163.$$

$$\therefore\ \underline{\angle\text{OQP} = 24^\circ\ 36'.}$$

(*b*) In triangle ODP, OD = OP sin $\angle$OPD,

$$= 2{\cdot}2 \sin 35^\circ\ 55' = \underline{1{\cdot}2905 \text{ m.}}$$

Q6 (*a*) *Assuming the expansions for $\sin(A + B)$ and $\cos(A + B)$ only, show that*

(*i*) *$\sin 15^\circ = \frac{1}{4}(\sqrt{6} - \sqrt{2})$, and*
(*ii*) *$\operatorname{cosec} 75^\circ = 4 \sin 15^\circ$.*

(*b*) *If $\tan(A + B) = 2$, and $B = 3\pi/4$ rad, calculate the value of $\tan A$.*

(*c*) *Sketch one complete cycle of the sinusoid $y = 20\cos(2000\pi t - \pi/3)$, where t is in seconds. Calculate the time in milliseconds at which y is first zero after $t = 0$.*

A6 (*a*) Now, $\sin(A + B) = \sin A \cos B + \cos A \sin B,$

and $\qquad \cos(A + B) = \cos A \cos B - \sin A \sin B.$

(*i*)

$$\sin 15^\circ = \sin(45^\circ - 30^\circ),$$

$$= \sin 45^\circ \cos(-30^\circ) + \cos 45^\circ \sin(-30^\circ),$$

$$= \frac{1}{\sqrt{2}} \times \frac{\sqrt{3}}{2} + \frac{1}{\sqrt{2}} \times \left(-\frac{1}{2}\right),$$

$$= \frac{\sqrt{3} - 1}{2\sqrt{2}} = \underline{\tfrac{1}{4}(\sqrt{6} - \sqrt{2}).} \qquad \text{QED}$$

(*ii*)

$$\operatorname{cosec} 75^\circ = \frac{1}{\sin 75^\circ} = \frac{1}{\cos 15^\circ} = \frac{1}{\cos(45^\circ - 30^\circ)},$$

$$= \frac{1}{\cos 45^\circ \cos(-30^\circ) - \sin 45^\circ \sin(-30^\circ)},$$

$$= \frac{1}{\frac{1}{\sqrt{2}} \times \frac{\sqrt{3}}{2} - \frac{1}{\sqrt{2}} \times \left(-\frac{1}{2}\right)} = \frac{2\sqrt{2}}{\sqrt{3} + 1},$$

$$= \frac{2\sqrt{2}(\sqrt{3} - 1)}{(\sqrt{3} + 1)(\sqrt{3} - 1)},$$

$$= \frac{2\sqrt{2}(\sqrt{3} - 1)}{3 - 1} = \sqrt{6} - \sqrt{2},$$

$$= \underline{4 \sin 15^\circ} \text{ (from part (}i\text{)).} \qquad \text{QED}$$

(*b*)

$$\tan(A + B) = \frac{\tan A + \tan B}{1 - \tan A \tan B} = 2.$$

If $B = 3\pi/4$ rad $= 135°$, $\tan B = \tan(-45°) = -1$.

$$\therefore \quad \frac{\tan A - 1}{1 - \tan A \times (-1)} = 2,$$

or $\tan A - 1 = 2 + 2\tan A$, whence $\underline{\tan A = -3.}$

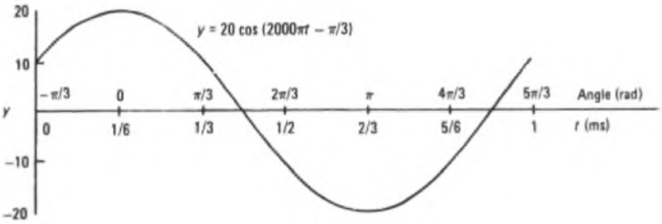

(*c*) The curve is shown in the sketch. For one complete cycle, the angle must vary through 2π rad; that is, from $t = 0$ to the time when $2000\pi t = 2\pi$, or $t = 1$ ms. The curve has the standard cosine shape, but with a phase angle of $\pi/3$ rad lagging.

When $y = 0$, $20\cos(2000\pi t - \pi/3) = 0$.

Since $\cos \pi/2 = 0$, $2000\pi t - \pi/3 = \pi/2$.

$$\therefore \quad 2000\pi t = 5\pi/6, \text{ whence } \underline{t = 5/12 \text{ ms.}}$$

Q7 *(a) Derive from first principles an expression for dy/dx when $y = 9x^2 + 2/3x$.*
(b) Show that this function has a minimum value, but no maximum value.
(c) Sketch the graph of $y = 9x^2 + 2/3x$, displaying both positive and negative values of x.

A7 (*a*) Let x increase by a small amount δx, and let δy be the corresponding change in y. Then

$$y + \delta y = 9(x + \delta x)^2 + \frac{2}{3(x + \delta x)}.$$

$$\therefore \quad \delta y = 9(x + \delta x)^2 - 9x^2 + \frac{2}{3(x + \delta x)} - \frac{2}{3x},$$

$$= 18x\delta x + 9(\delta x)^2 + \frac{2x - 2(x + \delta x)}{3x(x + \delta x)}.$$

$$\therefore \quad \frac{\delta y}{\delta x} = 18x + 9\delta x - \frac{2}{3x(x + \delta x)}.$$

$$\therefore \quad \frac{dy}{dx} = \lim_{\delta x \to 0} \frac{\delta y}{\delta x} = \underline{18x - \frac{2}{3x^2}}.$$

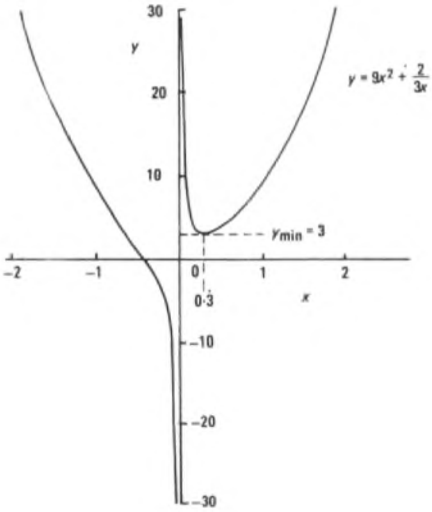

(*b*) For a maximum or minimum value, $dy/dx = 0$.

$$\therefore \quad 18x - \frac{2}{3x^2} = 0, \text{ or } 18x = \frac{2}{3x^2}.$$

$$\therefore \quad x^3 = 1/27, \text{ or } x = 1/3.$$

Also, $\dfrac{d^2y}{dx^2} = 18 + \dfrac{4}{3x^3}$.

When $x = 1/3$, $\dfrac{d^2y}{dx^2} = 18 + 36 = 54$.

Since the second derivative is positive, there is a minimum value at $x = 1/3$. As the first derivative is zero at one point only, there is no maximum value.

(*c*) The sketch shows the graph plotted from the table over the range $x = -2$ to $x = 2$.

x	-2	$-1{\cdot}5$	-1	$-0{\cdot}5$	$-0{\cdot}2$	0	$0{\cdot}1$	$0{\cdot}5$	1	$1{\cdot}5$	2
y	$35\frac{2}{3}$	$19{\cdot}8$	$8\frac{1}{3}$	$0{\cdot}92$	$-2{\cdot}97$	$\pm\infty$	$6{\cdot}76$	$3{\cdot}58$	$9\frac{2}{3}$	$20{\cdot}7$	$36\frac{1}{3}$

Q8 *An alternating voltage, $v = V\cos\omega t$, is applied across a capacitor C farads at a time t seconds.*
(a) Write as a function of t an expression for the current, i amperes, given by the formula

$$i = C\frac{dv}{dt}$$

when $V = 24$, $\omega = 4000$ rad/s and $C = 0{\cdot}3 \times 10^{-6}$. What is the peak value of this current?
(b) Calculate
(i) the current $0{\cdot}5$ ms after $t = 0$, and
(ii) the first instant after $t = 0$ at which the current reaches $+1$ mA.

A8 (*a*) Now, $\dfrac{dv}{dt} = -\omega V \sin \omega t$.

$$\therefore \quad i = -\omega CV \sin \omega t = \underline{-0{\cdot}0288 \sin 4000t \text{ amperes.}}$$

The peak value of current is $\underline{28{\cdot}8 \text{ mA.}}$

(*b*) (*i*) When $t = 0{\cdot}5$ ms,

$$i = -0{\cdot}0288 \sin(4000 \times 0{\cdot}5 \times 10^{-3}) \text{ A} = \underline{-26{\cdot}2 \text{ mA.}}$$

(*ii*) When $i = 1$ mA, $0{\cdot}001 = -0{\cdot}0288 \sin 4000t$,

whence $4000t = (180° + 1°\,59')$, $(360° - 1°\,59')$ etc.

The first instant after $t = 0$ occurs at $4000t = 181°\,59' = 3{\cdot}176$ rad,

whence $t = 3{\cdot}176/4000$ s $= \underline{0{\cdot}794 \text{ ms.}}$

Q9 *(a) Calculate the area in the first quadrant, enclosed between the curve $y = 4 - x^2$ and the x-axis.*
(b) (i) Find the function y such that $dy/dx = 4x^3 - 10x$, given that its graph cuts the x-axis at $x = 2$.
(ii) Show that this graph will also cut the axis at $x = -2$, and find 2 other such points of intersection.

A9 (*a*) The area is given by

$$\int_0^2 (4 - x^2)\,dx = \left[4x - \frac{x^3}{3}\right]_0^2,$$

$$= 8 - \frac{8}{3} = \underline{5\tfrac{1}{3}.}$$

(*b*) (*i*) If $dy/dx = 4x^3 - 10x$, then

$$y = \int (4x^3 - 10x)\,dx = x^4 - 5x^2 + c,$$

where c is a constant.

When $y = 0$, $x = 2$. Substituting these co-ordinates gives

$$0 = 16 - 20 + c, \text{ whence } c = 4.$$

Hence, the function is $\underline{y = x^4 - 5x^2 + 4.}$

MATHEMATICS B 1977 *(continued)*

(*ii*) Now, $x^4 - 5x^2 + 4 = (x^2 - 1)(x^2 - 4)$.

For y to be zero, $x^2 - 1 = 0$ (that is, $x = \pm 1$), or $x^2 - 4 = 0$ (that is, $x = \pm 2$).

Therefore, the graph also cuts the x-axis at $\underline{x = -2}$, and there are 2 other such points of intersection: at $\underline{x = -1}$ and $\underline{x = +1}$.

Q10 *(a) Express z in the form a + jb*

(i) if $z = (8 - j3)(4 + j5)$, *and*

(ii) if $z = \dfrac{3 + j4}{1 - j2}$.

(b) The admittance of a series circuit comprising R ohms and C farads is given by

$$Y = \frac{1}{R + \dfrac{1}{j\omega C}} \text{ siemens.}$$

Calculate this admittance, giving the answer in millisiemens to one place of decimals, when $R = 64$, $C = 4 \times 10^{-6}$ *and* $\omega = 10^4$ *rad/s.*

A10 (*a*) (*i*)
$$\begin{aligned} z &= (8 - j3)(4 + j5), \\ &= 32 + j40 - j12 + 15, \\ &= \underline{47 + j28.} \end{aligned}$$

(*ii*)
$$\begin{aligned} z &= \frac{3 + j4}{1 - j2}, \\ &= \frac{(3 + j4)(1 + j2)}{(1 - j2)(1 + j2)}, \\ &= \frac{3 + j6 + j4 - 8}{1 + 4}, \\ &= \frac{-5 + j10}{5} = \underline{-1 + j2.} \end{aligned}$$

(*b*)
$$\begin{aligned} Y &= \frac{1}{R + \dfrac{1}{j\omega C}} = \frac{j\omega C}{1 + j\omega CR}, \\ &= \frac{j\omega C(1 - j\omega CR)}{(1 + j\omega CR)(1 - j\omega CR)} = \frac{\omega^2 C^2 R + j\omega C}{1 + \omega^2 C^2 R^2}. \end{aligned}$$

The modulus of Y is given by

$$|Y| = \sqrt{\left\{\left(\frac{\omega^2 C^2 R}{1 + \omega^2 C^2 R^2}\right)^2 + \left(\frac{\omega C}{1 + \omega^2 C^2 R^2}\right)^2\right\}}.$$

For the values given, $\omega^2 C^2 R^2 = 6{\cdot}5536$.

$$\begin{aligned} \therefore\ |Y| &= \sqrt{\left\{\left(\frac{0{\cdot}1024}{7{\cdot}5536}\right)^2 + \left(\frac{0{\cdot}04}{7{\cdot}5536}\right)^2\right\}}, \\ &= \sqrt{(0{\cdot}0001838 + 0{\cdot}00002804)}, \\ &= 0{\cdot}01456 \text{ S} = \underline{14{\cdot}6 \text{ mS}}, \text{ to one decimal place.} \end{aligned}$$

RADIO AND LINE TRANSMISSION B 1977

Students were expected to answer any 6 questions.
The use of pocket calculators was permitted

Q1 *(a) Outline the merits of independent-sideband over double-sideband radio-telephone transmission.*

(b) Sketch the block diagram of an independent-sideband receiver, including the detector and output circuits.

(c) How are the speech channels separated in a 4-channel system?

A1 (*a*) A double-sideband radio transmission consists of a carrier wave and 2 sidebands, each of the latter conveying identical speech-channel information. An independent-sideband transmission has a much reduced carrier power (sufficient only to activate the automatic-gain and carrier-frequency-recovery circuits in the receiver), with each sideband carrying different (independent) speech channels. Frequency spectra for the 2 types of transmission are shown in sketch (*a*).

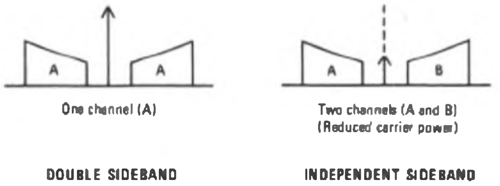

(*a*)

It is clear from sketch (*a*) that the independent-sideband system

(*i*) has twice the telephone-channel capacity for the same occupied radio-frequency spectrum,

(*ii*) has effectively half the receiver bandwidth, and consequently less receiver noise-power per channel, and

(*iii*) conserves power (by radiating a reduced carrier level, which conveys no intelligence). This can either enhance the power in the sidebands, thereby producing a higher signal-to-noise ratio at the receiver, or reduce the power-handling requirements of the transmitter.

Double-sideband transmission suffers a degradation of transmission quality when subjected to frequency-selective fading, which is the result of signal energy arriving via 2 or more paths. The deterioration is caused by

(*i*) the carrier fading below the combined level of the side-frequencies, thereby causing an effect similar to over-modulation, and

(*ii*) amplitude and phase asymmetry between corresponding side frequencies, which also causes distortion of the modulating frequency.

These effects are absent in independent-sideband transmission because the carrier is re-introduced at the receiver, and the sidebands are separated prior to demodulation.

(*b*) Sketch (*b*) shows a 4-channel independent-sideband receiver.

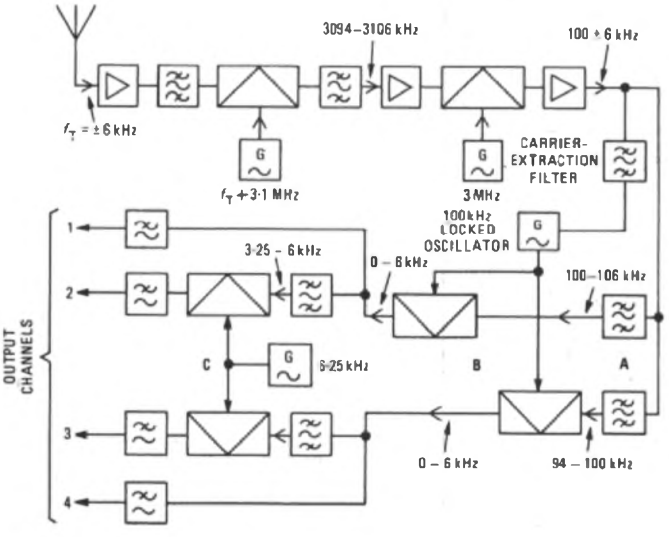

f_T: Transmitted frequency

(*b*)

(*c*) Sketch (*b*) shows that the channel separation process has the following 3 stages:

(*i*) the separation of upper and lower sidebands by filter action at point A,

(*ii*) the down-conversion of both sidebands at point B to base-bands in the range 0–6 kHz (2 speech channels: 0–3 kHz and 3·25–6 kHz), and (*iii*) down-conversion of the two 3·25–6 kHz channels at point C into the range 0–3 kHz and, after filtering, the transmission to line of all 4 channels.

Q2 (a) The voltage gain of an amplifier is μ*. Derive the modified gain of the amplifier when fraction* β *of the output voltage is fed back in antiphase to the input.*

(b) State 3 advantages of using negative feedback in a line amplifier of a coaxial line system carrying a number of telephone channels.

(c) The attenuation per unit length of a coaxial cable is 4 dB/km at 4 MHz, and increases as the square root of the frequency. Calculate the minimum gain requirement of a repeater at 12 MHz in order to obtain a repeater spacing of 5 km without loss of signal level.

A2 (*a*) The sketch shows the amplifier with feedback. For the input circuit,

$$E_{\text{in}} = V_{\text{in}} - \beta V_{\text{out}} = V_{\text{in}} - \beta\mu E_{\text{in}}.$$

$$\therefore\ E_{\text{in}} = \frac{V_{\text{in}}}{1+\beta\mu}.$$

$$\therefore\ V_{\text{out}} = \frac{\mu V_{\text{in}}}{1+\beta\mu},$$

whence the net gain $= \underline{\dfrac{V_{\text{out}}}{V_{\text{in}}} = \dfrac{\mu}{1+\beta\mu}}.$

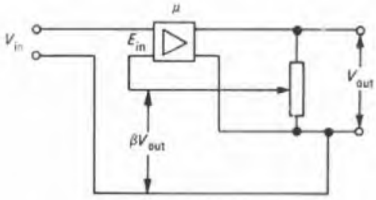

(*b*) (*i*) The net gain of the amplifier is stabilized against the effects of ageing of components and against supply-voltage variations.

(*ii*) Distortion generated within the amplifier is reduced; in particular, the effects of amplitude non-linearity are mitigated.

(*iii*) Noise and other signals (such as hum) developed within the amplifier are reduced.

(*iv*) By using frequency-conscious feedback circuitry, the gain/frequency response of the amplifier can be controlled.

(*c*) If A is the attenuation of the cable and f is the frequency, then $A = k\sqrt{f}$, where k is a constant.

$$\therefore\ \frac{A_{12\,\text{MHz}}}{A_{4\,\text{MHz}}} = \frac{k\sqrt{(12\times10^6)}}{k\sqrt{(4\times10^6)}} = \sqrt{3}.$$

At 4 MHz, the attenuation of the 5 km length of cable is 4 dB/km × 5 km = 20 dB.

$$\therefore\ A_{12\,\text{MHz}} = \sqrt{3}\times 20 = \underline{34\cdot6\text{ dB}}.$$

Q3 (a) With the aid of a sketch, describe the construction of a unipole (Marconi) aerial suitable for the transmission of low frequencies.

(b) Describe the operation of the unipole aerial, and sketch the radiation patterns in the horizontal and vertical planes.

(c) How would the transmitter be connected to the aerial in part (a)?

(d) What is the type of wave propagated?

A3 (*a*) Sketch (*a*) shows a unipole aerial suitable for low frequencies. It consists of a guyed lattice mast with a length equal to $\lambda/4$ metres (where λ is the working wavelength), supported on an insulator across which the radio-frequency power is applied. Insulators are also placed in the guy lines to ensure that the energized mast is not shorted to earth. Copper wires radiate from the earth connexion at the base to form an effective earth plane. At very low frequencies, it is often impracticable to construct a $\lambda/4$ metre high mast and, consequently, shorter structures are used. To compensate for the resulting change in the electrical properties of the aerial (which becomes capacitive), it is necessary to introduce inductance in series with, and at the base of, the mast.

(*b*) With a good reflecting earth plane, the $\lambda/4$ metre mast effectively becomes one arm of a $\lambda/2$ metre dipole aerial, the second arm being an image in the earth. The radiation pattern is illustrated in sketch (*b*).

(*c*) The physical construction of the aerial dictates that it be fed from an unbalanced feeder, and its input impedance is approximately half that of a dipole; that is, about 40 Ω. Consequently, if the transmitter output is conveyed on a 300 Ω balanced-pair feeder, then both impedance conversion and balanced-to-unbalanced conversion by a suitable transformer are required at the base of the mast.

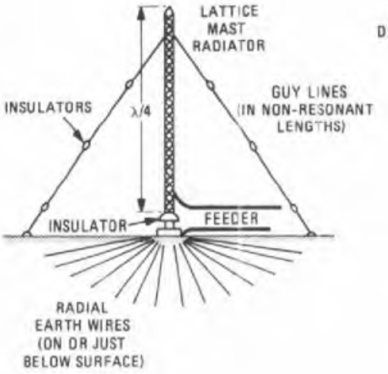

(*a*)

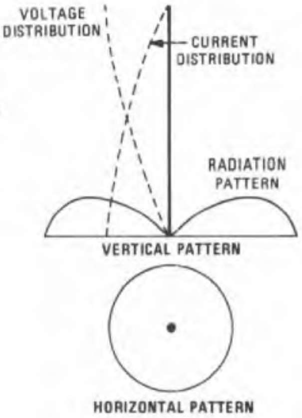

(*b*)

(*d*) The aerial radiates an electromagnetic wave as a vertically-polarized ground wave.

Q4 (a) With the aid of a sketch, briefly describe the ionosphere.

(b) How can radio propagation in the frequency band 3–30 MHz be affected by the ionosphere?

(c) Explain the following terms:

(i) skip distance,
(ii) dead zone,
(iii) critical frequency at vertical incidence,
(iv) maximum usable frequency, and
(v) optimum traffic frequency.

A4 See A4, Radio and Line Transmission B 1972, *Supplement*, Vol. 66, p. 88, Jan. 1974, and A6, Radio and Line Transmission B 1973, *Supplement*, Vol. 68, p. 10, Apr. 1975.

Q5 (a) Explain the following types of noise, which can occur in communication equipment:

(i) thermal (resistance) noise,
(ii) shot noise (shot effect),
(iii) microphony, and
(iv) flicker noise.

(b) External interference can be the result of impulse noise generated by motors or by lightning discharges. Explain why such interference affects radio communication.

A5 (*a*) (*i*) Thermal-agitation noise occurs in all conductors, and is caused by the random movement of electrons in the conductor. The noise has a uniform power/frequency spectrum and is proportional to the absolute temperature of the conductor. The noise-power level, P_n watts, is given by

$$P_n = KTB \text{ watts},$$

where K is Boltzmann's constant (equal to $1\cdot38\times10^{-23}$ J/K), T is the absolute temperature (kelvins), and B is the bandwidth (hertz).

(*ii*) Shot-effect noise in a thermionic valve is the result of fluctuations in cathode emission due to the random distribution of electrons. Although cathode current may be indicated as a steady direct current, superimposed on this are small variations due to the characteristics of electron flow. Since these variations are entirely random, the resultant noise-power/frequency spectrum is again uniform.

(*iii*) Lack of rigidity of an electrode in a valve can cause modulation of the electron stream when the valve suffers vibration. The effect is known as *microphony*, and can occur in both high-frequency and low-frequency amplifiers.

(*iv*) The phenomena that cause flicker noise are not clearly understood, but noise is produced which is inversely proportional to frequency, and which is significant only below about 100 kHz. It is believed to be caused by low-frequency variations in emission from oxide-coated cathodes in valves, but the effect is also observed in semiconductor devices.

(*b*) Impulse noise consists of intense current spikes which, because of their short duration, create an interference spectrum covering a large frequency band extending from zero to many megahertz. Since the interference covers a wide frequency range, the power received tends to be proportional to the reception bandwidth.

Such interference can enter a receiver through the aerial or by induction into the internal circuitry (especially when screening is inadequate), or by way of the power supply.

In the case of impulse noise generated by motors, the cause is arcing at the commutator but, in the case of lightning, the cause is the intense discharge in the atmosphere.

Q6 (*a*) *Draw the block diagram of a superheterodyne receiver suitable for long-distance radio communication. Describe the function of each stage.*

(*b*) *Explain the following terms used in connexion with superheterodyne reception:*

(*i*) *image channel, and*
(*ii*) *adjacent-channel rejection.*

(*c*) *State methods of achieving satisfactory image and adjacent-channel rejection in a superheterodyne receiver.*

A6 (*a*) Sketch (*a*) shows a superheterodyne receiver suitable for long-distance communication.

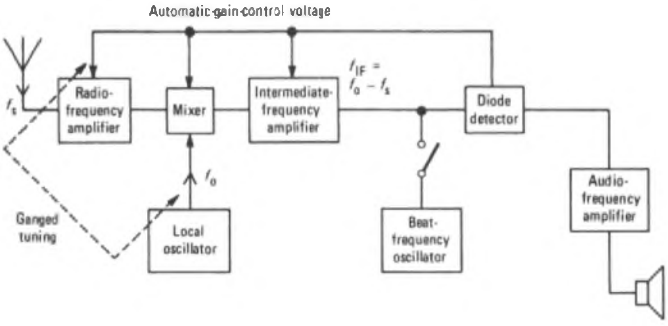

(*a*)

The radio-frequency amplifier is a low-*Q*-factor low-noise amplifier which is tuned to the required signal, f_s. Its primary functions are to reject the unwanted image channel and to provide low-noise amplification, and hence sensitivity, prior to the signal being passed to the high-noise-level frequency changer (mixer). A second signal, f_o, is applied to the frequency changer from the local oscillator such that $f_o - f_s = f_{IF}$, the intermediate frequency (IF). To keep f_{IF} constant, both the radio-frequency amplifier and local oscillator are tuned in unison, care being taken to ensure accurate tracking. The frequency changer mixes the 2 components and produces at its output f_o, f_s, $f_o \pm f_s$ and other harmonics. The required IF ($f_o - f_s$) is applied to the fixed tuned IF amplifier, whose function is to provide selectivity against adjacent-channel interference, and the bulk of the pre-detection amplification. The amplitude-modulated signal is detected in the next stage, and the detected signal is amplified to a level sufficient to drive the loudspeaker. The detector stage also provides a DC voltage whose amplitude is proportional to the received signal level. This voltage, called the automatic-gain-control voltage, can be used to control the gain of the IF and radio-frequency stages, thereby providing an audio output sensibly independent of the received signal level. If an unmodulated carrier is to be received, then, to provide an audible indication of its presence, the IF is made to beat with the output of the beat-frequency oscillator to give an audible tone.

(*b*) (*i*) The IF is the difference between the received-signal and local-oscillator frequencies. However, a third signal, f_i, may exist such that $f_i - f_o = f_{IF}$. In this situation, f_i is called the *image signal* or *image channel*.

(*ii*) Adjacent-channel rejection is the ability of the receiver to discriminate in favour of the wanted signal and against strong signals close to it. It is a measure of the selectivity of the receiver.

Sketch (*b*) shows image and adjacent-channel signals on a typical frequency spectrum for a superheterodyne receiver .

(*b*)

(*c*) Image-channel rejection is achieved by having a selective radio-frequency amplifier prior to the frequency changer to suppress the image channel. Suppression is enhanced by choosing a high IF, which moves the image channel further from the radio-frequency amplifier's passband.

Adjacent-channel rejection is provided by using a selective IF amplifier. In long and medium-wave broadcasting, the station frequencies are separated by 9 kHz. Thus, to be able to reject the adjacent channel, the IF amplifier bandwidth needs to be no wider than 9 kHz. This selectivity is more easily achieved by choosing a low IF.

Therefore, a compromise between a high IF for image rejection and a low IF for adjacent-channel rejection is necessary. In a medium-wave broadcast receiver, the chosen compromise is an IF of about 465 kHz.

Q7 (*a*) *What is the meaning of the term Q-factor?*

(*b*) *With the aid of a simplified circuit diagram, explain the operation of a Q-meter.*

(*c*) *Describe in detail a method of measuring*

(*i*) *inductance,*
(*ii*) *the Q-factor of an inductor, and*
(*iii*) *capacitance.*

A7 See A7, Radio and Line Transmission B 1973, *Supplement*, Vol. 68, p. 10, Apr. 1975, and A1, Radio and Line Transmission B 1974, *Supplement*, Vol. 68, p. 49, Oct. 1975.

Q8 (*a*) *Explain the term critical coupling as applied to coupled tuned circuits.*

(*b*) *Sketch the curve of secondary current against frequency when critical coupling is obtained. Show the effect of varying coupling about the critical value.*

(*c*) *The bandwidth, B, at the −3 dB points of a coupled tuned circuit of centre frequency* f_0 *is given by* $B = \sqrt{2} \times k_c f_0$, *where the critical coupling coefficient,* k_c, *is given by* $1/\sqrt{(Q_1 Q_2)}$. *Give values of* k_c *and the Q-factors for the identical windings of a transformer required to provide a 3 dB bandwidth of 10 kHz when* f_0 *is 465 kHz.*

A8 (*a*) Coupling between tuned circuits is said to be critical when the resistance which the secondary circuit reflects into the primary circuit is equal to the primary circuit resistance, which occurs at resonance. At critical coupling, the secondary current has a maximum value.

(*b*) The sketch shows curves of secondary current against frequency for various values of coupling coefficient, including critical coupling.

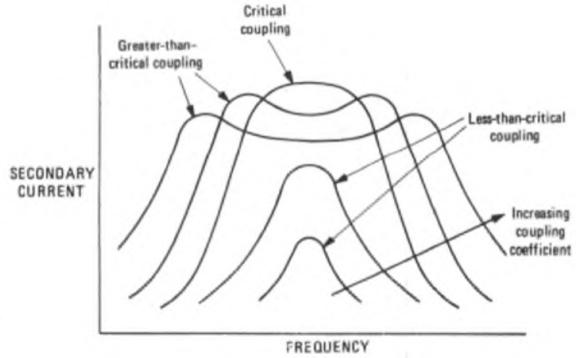

(*c*) In the formula $k_c = 1/\sqrt{(Q_1 Q_2)}$, Q_1 and Q_2 represent the *Q*-factors of the primary and secondary windings. Since the windings are identical, $Q_1 = Q_2 = Q$.

$$\text{Now,} \quad k_c = \frac{B}{\sqrt{2} \times f_0} = \frac{10^4}{\sqrt{2} \times 465 \times 10^3} = \underline{0 \cdot 0152.}$$

$$\text{Also,} \quad k_c = 1/Q, \text{ whence } \underline{Q = 65 \cdot 8}.$$

Q9 (*a*) *Sketch the circuit diagrams of 2 of the following:*

(*i*) *a diode detector for amplitude-modulated signals,*
(*ii*) *a double-balanced modulator, and*
(*iii*) *either a cathode or emitter follower.*

(*b*) *Explain the operation of each of the 2 circuits in part* (*a*).

A9 For a description of a diode detector, see A2, Radio and Line Transmission B 1975, *Supplement*, Vol. 69, p. 37, July 1976.

Double-Balanced Modulator

The circuit of a double-balanced modulator is shown in sketch (*a*).

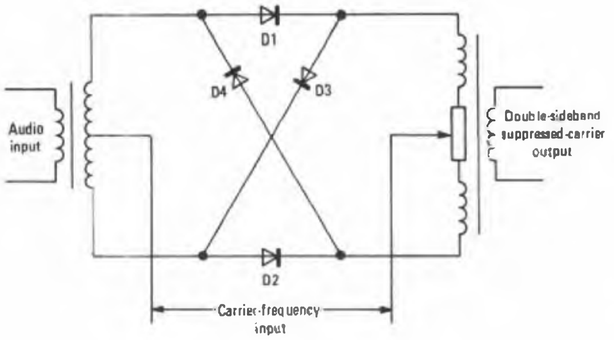

(*a*)

The carrier-frequency waveform has a much larger amplitude than that of the modulating audio signal. Consequently, the carrier waveform controls the conduction state of the diodes, alternately forward-biasing diodes D1 and D2 on one half-cycle, and diodes D3 and D4 on the next. Under these 2 biasing conditions, the effective circuits, as seen by the modulating signal, are as shown in sketch (*b*).

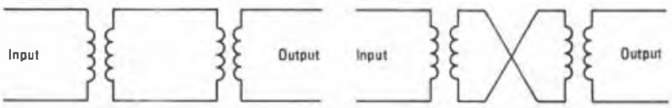

Half-cycle of carrier frequency for which left-hand end of the modulator is positive with respect to the right-hand end

DIODES D1 AND D2 CONDUCTING

Half-cycle for which the left-hand end is negative with respect to the right-hand end

DIODES D3 AND D4 CONDUCTING

(*b*)

Both conduction states occur once in each cycle of the carrier, so that the modulating signal reverses polarity at the output of the modulator for each carrier half-cycle. The resulting output waveform is shown in sketch (*c*). The amplitude of the envelope is proportional to the amplitude of the modulating signal, and the switching period is equal to the carrier period.

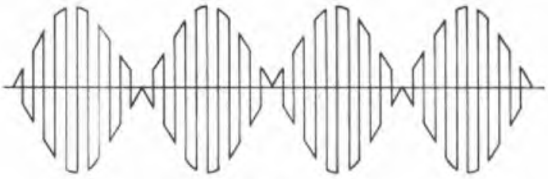

(*c*)

This type of waveform is called a *double-sideband suppressed-carrier* signal, total suppression of the carrier being achieved through careful balancing of the circuit by adjusting the potentiometer. In a correctly balanced circuit, the carrier current divides equally between the 2 arms of each of the input and output transformers, and thus produces no secondary current.

For a description of an emitter follower, see A10, Radio and Line Transmission B 1973, *Supplement*, Vol. 68, p. 12, Apr. 1975. (The circuit diagram of an emitter follower is given below in A10 of this paper.)

Q10 (*a*) *Sketch the basic circuits of transistor amplifiers in the following configurations:*

- (*i*) *common-base,*
- (*ii*) *common-emitter, and*
- (*iii*) *common-collector (emitter follower).*

(*b*) *Set out a table giving the following for the above configurations:*

- (*i*) *input impedance,*
- (*ii*) *output impedance,*
- (*iii*) *current gain, and*
- (*iv*) *principal use.*

(*c*) *With the aid of a circuit diagram, show the bias connexions of one of the types of transistor amplifier given in part* (*a*).

A10 (*a*) and (*c*) The required circuits are shown in the sketches. Bias arrangements have been included; in each case, resistors R1 and R2 provide the bias in conjunction with the emitter resistor, R3.

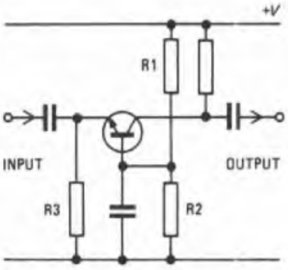

COMMON BASE

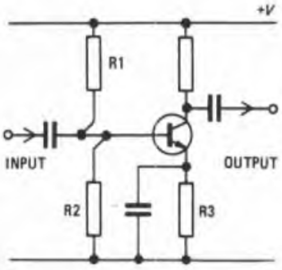

COMMON EMITTER

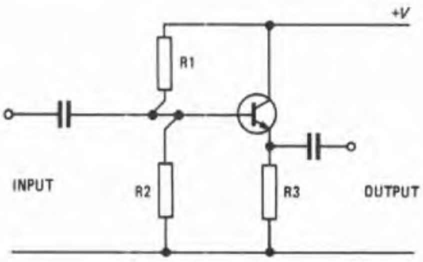

EMITTER FOLLOWER

(*b*) The required parameters are compared in the table.

Parameter	Common Base	Common Emitter	Emitter Follower
Input Impedance	50–500 Ω	1–5 kΩ	50–100 kΩ
Output Impedance	> 50 kΩ	2–10 kΩ	< 100 Ω
Current Gain	<1·0	≈ 50	≈50
Principal Use	Low-input-impedance high-frequency amplifier	General-purpose amplifier for low to medium frequencies	Buffer amplifier between high and low impedances. Power amplifier

COMPUTERS B 1977

Students were expected to answer any 6 questions

Q1 Convert the following numbers into binary form, showing all working:

(a) $1425 \cdot 65625_{10}$,
(b) 265731_8,
(c) $ABEDC109_{16}$, *and*
(d) *52346 Binary-coded decimal: weighted* $8\bar{4}21$ ·

A1 (*a*) The binary representation of 1425·65625 is obtained by repeated division by 2 of the integral part, and repeated multiplication by 2 of the fractional part, as shown in the tables.

Integral Part

Quotient	Remainder
2)1425	
712	1
356	0
178	0
89	0
44	1
22	0
11	0
5	1
2	1
1	0
0	1

Fractional Part

Result	Product
	0·65625 × 2
1	0·31250
0	0·62500
1	0·25000
0	0·50000
1	0·00000

For the integral part, the remainder is noted in reverse order (the final remainder being the most significant digit). For the fractional part, the result is noted in correct order.

$$\therefore\ \underline{1425\cdot 65625_{10} = 10\ 110\ 010\ 001\cdot 101\ 01_2}.$$

(*b*) The radix 8 gives a numbering system known as the *octal* system. Because 8 is a power expansion of 2 (that is, 2^3), each octal digit represents the denary value of a 3-digit binary number, as shown in the table

Octal	Binary
1	001
2	010
3	011
4	100
5	101
6	110
7	111
0	000

$$\therefore\ \underline{265731_8 = 010\ 110\ 101\ 111\ 011\ 001_2}.$$

(*c*) The radix 16 gives a numbering system known as the *hexadecimal* system. Alphabetic characters are used so that the numbers 10–15 can be represented in single-character form. Since $16 = 2^4$, each hexadecimal digit (including the alphabetic characters) represents a 4-digit binary number, as shown in the table.

Hexadecimal	Binary
1	0001
2	0010
3	0011
4	0100
5	0101
6	0110
7	0111
8	1000
9	1001
A	1010
B	1011
C	1100
D	1101
E	1110
F	1111
0	0000

$$\therefore\ \underline{ABEDC109_{16} = 1010\ 1011\ 1110\ 1101\ 1100\ 0001\ 0000\ 1001_2}.$$

(*d*) In a binary-coded decimal (BCD) system, each digit of the decimal number is simply replaced by its binary equivalent. A commonly-used weighting for a 4-digit binary code gives the least significant bit the value 1, the next the value 2, the next the value 4, and the most significant the value 8. Such a code is said to be weighted 8421. Thus, the BCD representation of 52346_{10} in a 4-digit code weighted 8421 is as shown below. Each decimal digit is given by multiplying each binary digit by its weighted value, and summing the results.

5	2	3	4	6
0101	0010	0011	0100	0110

In a BCD system weighted $8\bar{4}21$, the second digit takes the value -4, so that

$$\underline{52346_{10} = 1101\ 0010\ 0011\ 1100\ 1110_{\mathrm{BCD}8\bar{4}21}}.$$

Q2 (a) Using AND, OR *and* NOT *gates, draw a logic diagram of a circuit capable of detecting an* EXCLUSIVE OR *situation.*

(b) Verify the function by drawing the truth tables for each logic element used.

(c) How could the logic diagram be modified to produce an EQUIVALENCE *logic circuit?*

A2 (*a*) A logic diagram for an EXCLUSIVE OR circuit is shown in the sketch.

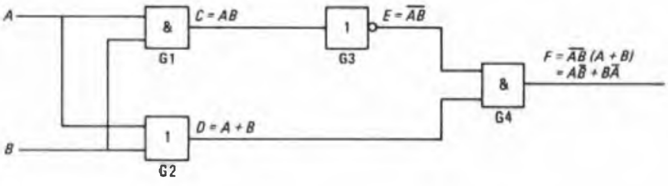

(*b*) Truth tables for each element are shown below.

G1	A	B	$C = AB$
	0	0	0
	1	0	0
	0	1	0
	1	1	1

G2

A	B	$D = A + B$
0	0	0
1	0	1
0	1	1
1	1	1

G3

C	$E = \bar{C}$
0	1
0	1
0	1
1	0

G4

D	E	$F = DE$
0	1	0
1	1	1
1	1	1
1	0	0

Thus, the overall truth table is as shown below, and can be seen to represent the EXCULSIVE OR function.

A	B	$F = A\bar{B} + B\bar{A}$
0	0	0
1	0	1
0	1	1
1	1	0

Note For the sake of completeness only, the following demonstrates that $\overline{AB}(A + B) = A\bar{B} + B\bar{A}$ using Boolean algebra (see sketch).

$$\overline{AB}(A + B) = A\overline{AB} + B\overline{AB} = A(\bar{A} + \bar{B}) + B(\bar{A} + \bar{B}),$$
$$= A\bar{A} + A\bar{B} + B\bar{A} + B\bar{B} = \underline{A\bar{B} + B\bar{A}}.$$

(*c*) The EXCLUSIVE OR function is the NON-EQUIVALENCE function. Thus, to detect an EQUIVALENCE situation, the circuit in the sketch requires its output to be inverted; that is, a NOT gate must be added after gate G4.

Q3 Draw an emitter-follower 2-input logic AND *circuit, using p n p transistors. Show typical voltages, and explain fully the action of the circuit.*

A3 The sketch shows an emitter-follower 2-input logic AND circuit, with typical supply voltages. It consists of a simple diode AND gate (D1, D2 and R1) and an emitter-follower circuit (TR1 and R2). The emitter follower has the following important characteristics:

(*i*) a very high input impedance,
(*ii*) a very low output impedance,
(*iii*) a high current gain, and
(*iv*) the output logic state is the same as the input logic state.

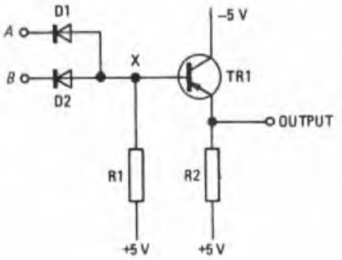

If either input A or B is at -5 V, the respective diode is forward biased and a current flows through resistor R1. Point X is therefore at approximately -5 V. This causes transistor TR1 to be turned on, and a large current flows through resistor R2. The output is therefore also at approximately -5 V.

If both inputs A and B are at $+5$ V, no current flows through resistor R1, and point X is at $+5$ V. Transistor TR1 is therefore turned off and, as no current flows through resistor R2, the output is at $+5$ V.

The operation is summarized in the voltage table below. Using positive logic, where $+5$ V is logic state 1 and -5 V is logic state 0, a truth table can be constructed from the voltage table.

Voltage Table

A	B	X	Output
-5 V	-5 V	-5 V	-5 V
-5 V	$+5$ V	-5 V	-5 V
$+5$ V	-5 V	-5 V	-5 V
$+5$ V	$+5$ V	$+5$ V	$+5$ V

Truth Table

A	B	Output
0	0	0
0	1	0
1	0	0
1	1	1

From the truth table, the circuit can be seen to provide the AND function.

Q4 (*a*) *State what is meant by the term 2's complement, and explain why it is used in digital computers.*

(*b*) *Using 2's-complement arithmetic, perform the following calculations in binary form. Convert the results to denary form. Show all working.*

(*i*) $73_{10} - 25_{10}$, *and*
(*ii*) $16_{10} - 39_{10}$.

A4 (*a*) The 2's complement of a binary number is that number which, when added to the original number, results in an all-zeros answer and a carry from the left-most bit. The 2's complement is obtained by finding the one's complement and adding 1. The one's complement is obtained by inverting each bit of the original number.

Two's-complement arithmetic is used in computers because it simplifies the process of subtraction. The 2's complement of a number is a convention used for representing negative numbers. Each number is assigned a sign bit: 0 for positive numbers and 1 for negative. To obtain the negative of a number, the 2's complement of the positive number, including the sign bit, is derived, During calculations using 2's-complement working, it is not necessary to keep a check of the sign of partial results. If the final answer is negative, as indicated by its sign bit, its 2's complement is taken as the magnitude. Hence, in 2's-complement arithmetic, subtraction is performed by addition operations.

(*b*) (*i*) $73_{10} - 25_{10}$ is the same as $\{73_{10} + (-25_{10})\}$; the 2's-complement solution of this calculation is shown below.

		Sign bit	
25_{10}:		0	0 011 001
Two's complement of 25_{10}:		1	1 100 111
Add 73_{10}:		0	1 001 001
	1	0	0 110 000

$$\therefore\ \underline{73_{10} - 25_{10} = 0\,110\,000_2}.$$

To convert the result to denary form, each bit is multiplied by its weight and the results are summed.

$$110\,000_2 = 1 \times 2^5 + 1 \times 2^4 = \underline{48_{10}}.$$

(*ii*) Similarly, the calculation $16_{10} - 39_{10}$ is shown below.

	Sign bit	
39_{10}:	0	100 111
Two's complement of 39_{10}:	1	011 001
Add 16_{10}:	0	010 000
	1	101 001

The result is negative and is therefore represented in 2's-complement form. Conversion to a negative binary number is performed by subtracting 1 to obtain the one's complement, and inverting each bit, as shown below.

Two's complement:	101 001
One's complement:	101 000
Inversion:	010 111

$$\therefore\ \underline{16_{10} - 39_{10} = -010\,111_2}.$$

Converting to denary form gives

$$-010\,111_2 = -(1 \times 2^4 + 1 \times 2^2 + 1 \times 2^1 + 1 \times 2^0),$$
$$= \underline{-23_{10}}.$$

Q5 (a) With reference to machine-code instructions, explain the difference between 1, 2 and 3-address instructions.

(b) Explain the meaning of the term microprogram. How is a microprogram related to the computer's main program?

(c) Describe 2 ways of implementing a microprogram, and give their relative merits.

A5 (*a*) A 1-address instruction consists of a FUNCTION part and an ADDRESS part, as shown in the sketch. The parts of the instruction are referred to as *fields*. If single-address instructions are used, then, for each operand, it is necessary to fetch one instruction from store to obtain the address of that operand before any arithmetic can be performed. If the result is to be placed in store, an extra instruction is required to write the result into the store at the address specified in the instruction. Therefore, to execute one operation, 3 instructions must be obtained from store.

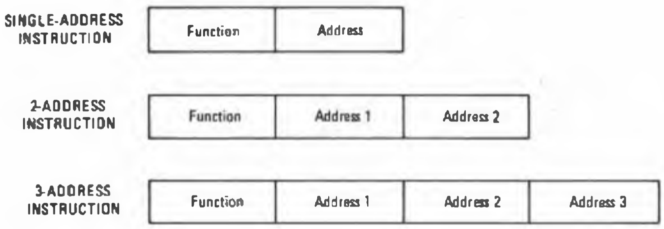

A 2-address instruction consists of a function field and 2 address fields, as shown in the sketch. The instruction contains the addresses of both operands required for the function. When a 2-address instruction is used, it is retained in the central processor until both operands have been obtained and the function performed. A further instruction is required to transfer the result to store.

A 3-address instruction contains a function field and 3 address fields (see sketch). The instruction contains the address of both operands and of the location into which the result is to be placed. When a 3-address instruction is used, it is retained in the central processor until both operands have been obtained from store, the function performed, and the result transferred back to store.

The main advantage of the multi-address instruction is increased speed due to the reduction in storage cycles involved. However, the multi-address instruction requires more complex control logic.

(*b*) In executing a program instruction, a computer performs a series of smaller steps called *micro-instructions*, which are the smallest operations that the computer can perform. A microprogram is a group of micro-instructions which allows one complete program instruction to be obeyed. The concept of microprogramming has been developed to provide a means whereby the programmer may, within limits, design the machine-code instruction-set to suit his requirements. The feature common to all forms of microprogramming is that some method is provided for specifying the individual control signals to be actuated in the computer.

The microprogram translates the machine-code instructions of the computer's main program into a greater number of micro-instructions to achieve the desired effect.

(*c*) Two ways in which microprograms may be implemented are by a diode matrix, or by software using a READ/WRITE store. In the first method, the program is *wired-in* and the control circuits are arranged so that any given binary-digit combination in the FUNCTION part of an instruction initiates a desired set of micro-instructions. The control signals are generated through arrays of diode matrices.

In the second method, the microprograms are stored in, for example, a magnetic-core store. The execution of each machine-code instruction is analogous to the functioning of a subroutine in conventional programming. Each instruction requires the execution of a number of micro-instructions held in the core store.

The advantage of the diode-matrix method is that it is fast in execution. However, once the sequence of micro-instructions has been fixed, it cannot easily be changed. The core-store method is slower but is more flexible, and it is easier to modify the microprogram.

Q6 With the aid of circuit diagrams, explain how an operational amplifier can be used as

(a) a summer, and

(b) an integrator, with provision to set initial conditions.

A6 (*a*) See A8, Computers B 1975, *Supplement*, Vol. 69, p. 54, Oct. 1976. In this reference, it is demonstrated that the result, y, is given by

$$y = \left(\frac{x_1}{R_1} + \frac{x_2}{R_2} + \frac{x_3}{R_3}\right) \times R_f,$$

where x_1, x_2 and x_3 are the input variables. If the values of the resistances are chosen such that $R_f = R_1 = R_2 = R_3$, the equation becomes

$$y = x_1 + x_2 + x_3,$$

which is that of a summer.

(*b*) See A10, Computers B 1971, *Supplement*, Vol. 65, p. 25, July 1972.

Q7 (a) Use a mapping method to minimize the following Boolean expression:

$$F = A\bar{B}CD + A\bar{B}C\bar{D} + \bar{A}B\bar{C}\bar{D} + \bar{A}B\bar{C}D + \bar{A}\bar{B}\bar{C}D.$$

(b) Draw a logic diagram to show how NAND gates only may be used to represent the minimized expression.

A7 (*a*) The function is represented on the Karnaugh map in sketch (*a*).

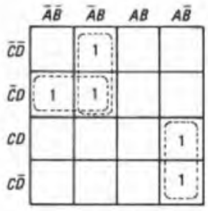

(*a*)

The logic variables can be grouped as shown by the dashed lines, resulting in the minimized expression:

$$\underline{F = A\bar{B}C + \bar{A}B\bar{C} + \bar{A}\bar{C}D.} \qquad \ldots\ldots (1)$$

(*b*) Using De Morgan's laws, equation (1) becomes

$$\bar{F} = (\overline{A\bar{B}C})(\overline{\bar{A}B\bar{C}})(\overline{\bar{A}\bar{C}D}),$$

whence

$$F = \overline{(\overline{A\bar{B}C})(\overline{\bar{A}B\bar{C}})(\overline{\bar{A}\bar{C}D})}. \qquad \ldots\ldots (2)$$

Equation (2) can be used directly to create a logic diagram using NAND gates only, as shown in sketch (*b*).

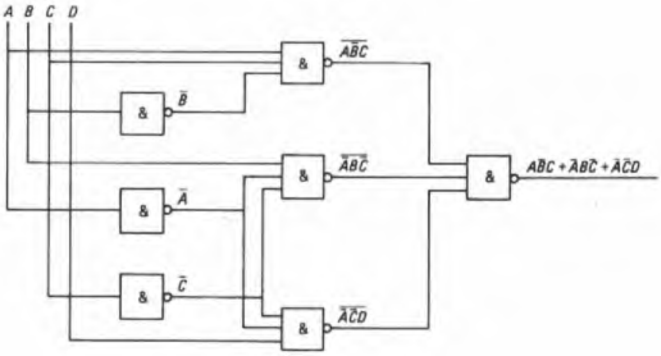

(*b*)

Q8 Write down the truth tables and draw logic diagrams for

(a) a binary full-adder, and

(b) a binary full-subtractor.

A8 A full adder is a device that adds together 2 binary numbers, one digit at a time, together with the carry digit from the previous stage of addition. The output is a sum digit and a carry digit.

In the truth table below, A and B are the 2 binary numbers to be added, C is the carry digit from the previous stage, S is the sum output and C_o is the carry output.

The full subtractor is a device that subtracts one binary number from another, one digit at a time, including the borrow digit from the previous stage of subtraction. The output is a difference digit and a borrow digit.

In the truth table below, E is the minuend, F is the subtrahend, G is the borrow digit from the previous stage, D is the difference output and G_o is the borrow output.

Full Adder					Full Subtractor				
A	B	C	S	C_o	E	F	G	D	G_o
0	0	0	0	0	0	0	0	0	0
0	0	1	1	0	0	0	1	1	1
0	1	0	1	0	0	1	0	1	1
0	1	1	0	1	0	1	1	0	1
1	0	0	1	0	1	0	0	1	0
1	0	1	0	1	1	0	1	0	0
1	1	0	0	1	1	1	0	0	0
1	1	1	1	1	1	1	1	1	1

From the truth table for a full adder, the Boolean expressions for the sum and carry outputs are:

$$S = \bar{A}\bar{B}C + \bar{A}B\bar{C} + A\bar{B}\bar{C} + ABC,$$
$$= \underline{A(\bar{B}\bar{C} + BC) + \bar{A}(\bar{B}C + B\bar{C})},$$

and $$C_0 = \bar{A}BC + A\bar{B}C + AB\bar{C} + ABC,$$
$$= BC(\bar{A} + A) + A(\bar{B}C + B\bar{C}) = \underline{BC + A(\bar{B}C + B\bar{C})}.$$

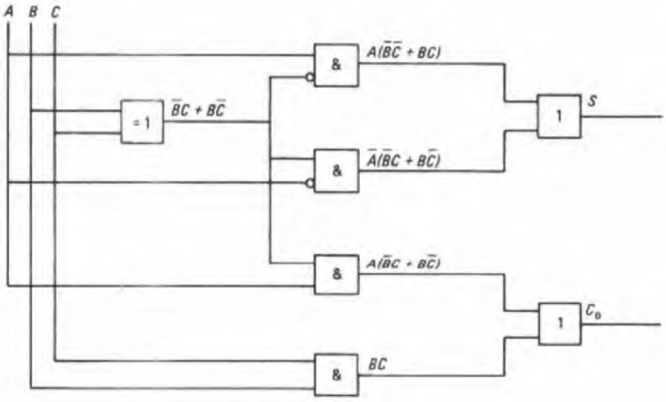

(*a*)

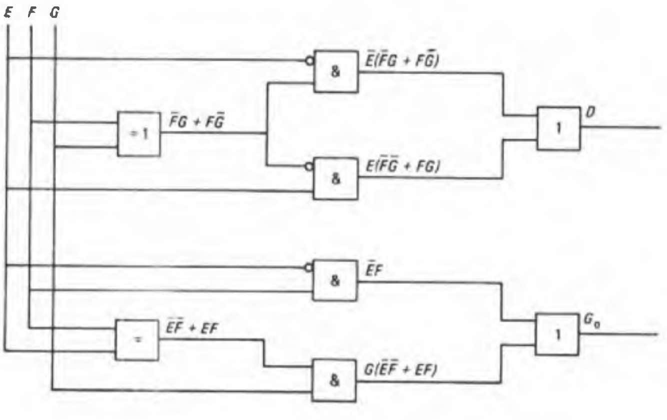

(*b*)

For the full subtractor, the Boolean expressions are:

$$D = \bar{E}\bar{F}G + \bar{E}F\bar{G} + E\bar{F}\bar{G} + EFG,$$
$$= \underline{E(\bar{F}\bar{G} + FG) + \bar{E}(\bar{F}G + F\bar{G})},$$

and $$G_0 = \bar{E}\bar{F}G + \bar{E}F\bar{G} + \bar{E}FG + EFG,$$
$$= \bar{E}F(\bar{G} + G) + G(\bar{E}\bar{F} + EF) = \underline{\bar{E}F + G(\bar{E}\bar{F} + EF)}.$$

From the expressions for S, C_o, D and G_o, logic diagrams for a full adder and full subtractor can be constructed, and are shown respectively in sketches (*a*) and (*b*).

Note $\bar{B}C + B\bar{C}$ is an EXCLUSIVE OR function, the inversion of which is the EQUIVALENCE function, $\bar{B}\bar{C} + BC$. In sketches (*a*) and (*b*), the symbol =1 denotes the EXCLUSIVE OR function, and the symbol = denotes the IDENTITY (or EQUIVALENCE) function. The symbols are in accordance with Section 21 of British Standard 3939.

Q9 (*a*) *Draw a circuit diagram of a monostable device, using n p n transistors, which will give a positive output pulse for a positive input trigger. With the aid of waveform diagrams, explain briefly the working of the device.*

(*b*) *How would a negative-going pulse of the same duration be obtained from the circuit?*

Q10 (*a*) *Name 4 types of binary-coded-decimal (BCD) weighting, and show how the denary number 7 would be represented in each of them.*

(*b*) *When adding 2 numbers in BCD form 8421, how is it arranged that a carry out from the BCD group will occur at the correct number? Give an example.*

(*c*) *Consider the following BCD numbers:*

(*i*) *101001100111,*
(*ii*) *100101100100.*

If the result of subtracting (*i*) *from* (*ii*) *is left as 103 in BCD, what could be the BCD weighting used?*

A10 (*a*) Four types of BCD weighting are given below, with the representation of 7_{10} in each.

BCD Weighting	7_{10}
5211	1100
3321	1101
2421	0111
7421	1000

(*b*) Two BCD numbers weighted 8421 are first added using the standard rules for binary addition. If the sum is greater than 9, or if a carry is generated, binary 6 is added to the result for correction. The following examples illustrate this rule.

Example 1	6_{10} :	0110
	7_{10} :	0111+
		1101 (Result > 9)
Add correction factor	(6_{10}):	0110+
		0001 0011 (Sum = 13_{10})
Example 2	49_{10} :	0100 1001
	7_{10} :	0000 0111+
		0101 0000 (Carry generated)
Add correction factor	(6_{10}):	0000 0110
		0101 0110 (Sum = 56_{10})

(*c*) The subtraction can be written as

Minuend:	1001 0110 0100
Subtrahend:	1010 0110 0111−

The result is 103_{10}. In the middle column, the minuend and subtrahend are equal. Since the middle digit of the result is zero, there is no borrow from the left-hand column, and the right-hand column does not borrow from the middle column. Thus, each column can be regarded as independent.

Assume that the BCD weighting is *wxyz*. In a BCD system, each decimal number is the result of multiplying each binary digit by its weight and summing the results. Thus, from the left-hand column,

$$w + z - (w + y) = 1,$$

or

$$z - y = 1. \qquad \ldots\ldots (1)$$

From the right-hand column,

$$x - (x + y + z) = 3,$$

or

$$-y - z = 3. \qquad \ldots\ldots (2)$$

Adding equations (1) and (2) gives

$$-2y = 4, \text{ whence } y = -2.$$

Substituting in equation (1) gives $z = -1$.

It is also clear from equations (1) and (2) that the values of w and x are irrelevant; that is, any values for w and x can be substituted without affecting the validity of the equations. The only constraint is that it must be possible to form all the denary digits 0–9 from w, x, y and z. Let $w = 8$ and $x = 4$. The BCD weighting is then $84\bar{2}\bar{1}$. The table below shows the resulting code.

Decimal Digit	BCD Code Weighted $84\bar{2}\bar{1}$
0	0000
1	0111
2	0110
3	0101
4	0100
5	1011
6	1010
7	1001
8	1000
9	1111

Comparing the codes in the table with those in the minuend and subtrahend gives the following interpretation.

	BCD Weighted $84\bar{2}\bar{1}$	**Denary**
Minuend:	1001 0110 0100	724
Subtrahend:	1010 0110 0111 −	621 −
	0111 0000 0101	103

POEEJ: SUBSCRIPTION ORDER FORM

Those wishing to subscribe to *The Post Office Electrical Engineers' Journal* can do so by completing the relevant section of the order form below. British Post Office (BPO) staff should complete the upper section and send it to their local *POEEJ* agent or, in case of doubt, to the address shown; non-BPO staff should complete the lower section. A photocopy of this form is acceptable.

SUBSCRIPTION ORDER (BPO STAFF)

To: The Local Agent (*POEEJ*), or
The Post Office Electrical Engineers' Journal (Sales),
2–12 Gresham Street, London EC2V 7AG.

Please arrange for me to receive *The Post Office Electrical Engineers' Journal*. I have completed the form opposite authorizing deductions from pay to cover the special annual subscription of £1·44.

Date .... Signature ....

Name and initials (in block capitals) ....

Rank ....

Official address ....

....

....

The Post Office Electrical Engineers' Journal:
Authority for Deduction from Pay

I, ...

(name in full, surname first in block capitals), authorize the deduction from my salary or wages, until further notice, of the sum of 12p per month/3p per week for 48 weeks for payment to the Managing Editor, *The Post Office Electrical Engineers' Journal*, on my behalf.

Date .... Signature ....

Official address ....

....

....

Rank .... Pay No. ....

Area/Dept. ....

YEARLY SUBSCRIPTION ORDER (NON-BPO STAFF)

To: *The Post Office Electrical Engineers' Journal* (Sales),
2–12 Gresham Street, London EC2V 7AG.

Please supply 4 quarterly issues of *The Post Office Electrical Engineers' Journal*. I enclose a cheque/postal order for the sum of £3·20 (Canada and the USA: $6·50) to cover the yearly subscription.

(Cheques and postal orders, payable to "*The POEE Journal*", should be crossed "& Co." and enclosed with the order. Cash should not be sent through the post.)

Name ....

Address ....

....

....

Please state with which issue you wish your subscription to commence (April, July, October or January) ....

POEEJ: SERVICE TO STUDENTS

For nearly 50 years, the *POEEJ*'s *Supplement* has been helping students studying CGLI courses, and the panel below shows those examinations for which model answers are still available in back numbers. Past answers, and those included in the *Journal*'s series of model-answer books, can also be used as practice material by students following TEC programmes. The tables of references currently being published in the *Supplement* give details of CGLI questions that closely match the TEC syllabi. The panel below shows in which issues those questions appear, and may be used to order appropriate back numbers and model-answer books.

The *POEEJ* plans to begin publishing model answers for level-1 TEC programmes next winter. If you do not receive the *Journal* regularly, may we draw your attention to the order form on p. 31 of this *Supplement*. A regular subscription will help you keep up to date across the range of telecommunications activities: from external works to communication satellites. (As a glance at recent issues of the *Journal* will show, advanced technology is being applied in both the fields mentioned.) In addition, we will continue, in the *Supplement*, to give all the help we can with your studies.

CGLI & TEC: GUIDANCE FOR STUDENTS

Back numbers of the *POEEJ* are available, complete with *Supplements* containing model answers to past examinations of the City and Guilds of London Institute Telecommunication Technicians' Course, and tables of references to those answers that most closely match the syllabi of the Technician Education Council's Certificate Programme in Telecommunications.

The price of back numbers is 80p each, including the *Supplement* and postage and packaging. (*Supplements* are not sold separately.)

July 1970	TpB^{Q4-10}, TTA, CB, LPPB, TgB, MC, TPC^{Q1-5} (1969)	☐
Oct. 1970	TPC^{Q6-10}, TgC, TpC, LTC, LPPC, BMCC, CRC^{Q1-7} (1969)	☐
Apr. 1972	ES^{Q3-10}, TgB, TpB, MA, CA, CB^{Q1-8} (1971)	☐
Apr. 1973	PM^{Q3-10}, ETP, ES, TPA, TpB, TPB^{Q1-6} (1972)	☐
July 1973	TPB^{Q7-10}, TgB, LPPA, MA, CA, TPC^{Q1-7} (1972)	☐
Oct. 1973	TPC^{Q8-10}, CRC, TgC, MB, CB, BMCC, TpC^{Q1-3} (1972)	☐
Jan. 1974	TpC^{Q4-10}, MC, LPPB, RLTB, TTA, LTC^{Q1} (1972)	☐
Apr. 1974	LTC^{Q2-10}, LPPC (1972); ETP, PM, ES, RLTA, TPA (1973)	☐
July 1974	MA, TTA, LPPA, CA, MB, TpB, TgB^{Q1-6} (1973)	☐
Oct. 1974	TgB^{Q7-10}, LPPB, CB, MC, CRC, LTC, TpC^{Q1-9} (1973)	☐
Jan. 1975	TpC^{Q10}, TPC, TgC, LPPC, BMCC (1973); PM, ES, MA^{Q1-9} (1974)	☐
Apr. 1975	MA^{Q10}, RLTA, ETP, TPA, TTA, LPPA, MB, CA (1974); TPB, RLTB (1973)	☐
July 1975	TgB, TpB, LPPB, CB^{Q1-9} (1974)	☐
Oct. 1975	CB^{Q10}, RLTB, TPC, CRC, LTC, TpC, TgC, MC, LPPC^{Q1-7} (1974)	☐
Jan. 1976	LPPC^{Q8-10}, BMCC (1974); ETP, PM, ES (1975)	☐
Apr. 1976	TPB (1974); TPA, MA, RLTA, LPPA, CA, TPB, MB (1975)	☐
July 1976	TTA, RLTB, TpB, TgB (1975)	☐
Oct. 1976	LPPB, CB, TPC, MC, CRC, TgC, TpC, LTC (1975)	☐
Jan. 1977	LPPC, BMCC (1975); PM, RLTA (1976)	☐
Apr. 1977	ES, ETP, TPA, MA, LPPA, CA, MB, TPB (1976)	☐
July 1977	TpB, TgB, CB, LPPB (1976)	☐
Oct. 1977	TTA, TPC, MC, TpC, TgC, BMCC, LPPC, LTC (1976)	☐
Jan. 1978	[M1, PS1, TS1]; CRC (1976); PM, ES, RLTA (1977)	☐
Apr. 1978	[LCA1, M2, EP2, E2]; ETP, TPA, MA, LPPA, CA, MB, RLTB, CB (1977)	☐

CGLI

BMCC: Basic Microwave Communication C
CA, CB: Computers A, B
CRC: Communication Radio C
ES: Engineering Science
ETP: Elementary Telecommunication Practice
LPPA, LPPB, LPPC: Line Plant Practice A, B, C
LTC: Line Transmission C

MA, MB, MC: Mathematics A, B, C
PM: Practical Mathematics
RLTA, RLTB: Radio and Line Transmission A, B
TgB, TgC: Telegraphy B, C
TpB, TpC: Telephony B, C
TPA, TPB, TPC: Telecommunication Principles A, B, C
TTA: Telephony and Telegraphy A

TEC

[ ] Denotes tables of references
M1, M2: Mathematics 1, 2
PS1: Physical Science 1
LCA1: Line and Customer Apparatus 1
TS1: Telecommunication Systems 1
EP2: Electrical Principles 2
E2: Electronics 2

Model-Answer Books A series of model-answer books is also available, in which selected answers from past examinations have been collected together to cover the following subjects.

Elementary Telecommunication Practice	60p	☐	Radio and Line Transmission A	85p	☐
Telecommunication Principles A	60p	☐	Telephony and Telegraphy A	85p	☐
Line Plant Practice A	60p	☐	Telecommunication Principles B	85p	☐

Orders, by post only, should be addressed to *The Post Office Electrical Engineers' Journal* (Sales), 2–12 Gresham Street, London EC2V 7AG. This panel, or a photocopy, may be used as an order form by marking the appropriate boxes. Cheques and postal orders, payable to "*The POEE Journal*", should be crossed "& Co." and enclosed with the order. Cash should not be sent through the post.

Published by *The Post Office Electrical Engineers' Journal*, 2–12 Gresham Street, London EC2V 7AG, and
printed in Great Britain at the Gresham Press by Unwin Brothers Limited, Old Woking, Surrey