THE
RADIO REVIEW

A MONTHLY RECORD OF SCIENTIFIC
PROGRESS IN RADIOTELEGRAPHY
AND TELEPHONY

VOL. II JUNE, 1921 No. 6

Editor:
PROFESSOR G. W. O. HOWE, D.Sc., M.I.E.E.
Assistant Editor:
PHILIP R. COURSEY, B.Sc., F.Inst.P., A.M.I.E.E.

CONTENTS

Editorial

Directional Measurements with the R.A.F. System J. HOLLINGWORTH, M.A.

Measurement of the Signals Received in Washington from the Lafayette Station . . . . . Dr. L. W. AUSTIN

A Use for the Valve in Wireless Measurements . . H. J. ROUND

The Manufacture of Radio Apparatus in France

Triode Oscillation Generators with Coupled Oscillatory Circuits F. HARMS

Review of Radio Literature:—
- **Abstracts of Articles and Patents**
- **Book Reviews**
- **Book Received**

Correspondence

Five Shillings Net

THE

RADIO REVIEW

A MONTHLY RECORD OF SCIENTIFIC PROGRESS IN
RADIOTELEGRAPHY AND TELEPHONY

Editor: Prof. G. W. O. HOWE, D.Sc., M.I.E.E. Asst. Editor: PHILIP R. COURSEY, B.Sc., A.M.I.E.E.

SUBSCRIPTION RATES.—£3 per annum, post free. Single copies, 5/-, or post free, 5/3.

Vol. II. No. 6 Registered at the G.P.O. for transmission by Magazine Post to Canada and Newfoundland. **JUNE, 1921**

Contents

PAGE

Editorial (Earth Antennæ) 281

Directional Measurements with the R.A.F. System. By J. Hollingworth, M.A. 282

Measurement of the Signals Received in Washington from the Lafayette Station. By Dr. L. W. Austin 301

A Use for the Valve in Wireless Measurements. By H. J. Round . . 303

The Manufacture of Radio Apparatus in France 307

Triode Oscillation Generators with Coupled Oscillatory Circuits. By F. Harms 313

Review of Radio Literature :—

Abstracts of Articles and Patents 322

Book Reviews :

"Admiralty Handbook of Wireless Telegraphy, 1920" 334

"Het draadloos Zendstation voor den Amateur (Telegrafie en Telefonie)." By J. Corver 335

Book Received 335

Correspondence :—

H. J. Round on "The Heterodyne Method of Wireless Reception, its Advantages, and its Future" 336

THE RADIO REVIEW

INFORMATION FOR CONTRIBUTORS

All correspondence relating to contributions should be addressed to The Editor, The " Radio Review," 12 & 13, Henrietta St., Strand, London, W.C. 2.

Correspondence intended for publication in the " Radio Review " must be accompanied by the full name and address of the writer, not necessarily for publication if a " nom-de-plume " is added, and should reach the Editor not later than the 7th of the month, for publication in the next issue.

The copyright of all articles accepted for publication in the " Radio Review " becomes the property of The Wireless Press, Ltd., unless special arrangements are made with the author at the time the article is submitted. Limited portions or abstracts of articles, or editorial notes, may however be reprinted on the express condition that specific reference is made to the " Radio Review " as the source of such material.

All manuscripts will be acknowledged as soon as received. The Editor will not be responsible for the return of manuscripts unless they are accompanied by a stamped addressed envelope, or by an international postage coupon in the case of foreign contributions. Manuscripts should be as complete as possible, with all necessary diagrams and illustrations. Line diagrams accompanying manuscript should only be in rough form, and will be redrawn before publication. Illustrations of apparatus should not be too small. They are best for reproduction when in the form of good photographic prints, wherever possible on glossy paper.

In articles involving the use of mathematical expressions and formulæ, the internationally recognised standard symbols should be employed wherever possible, and be given their most generally accepted significations.

Reprints of articles published in the " Review " can be supplied to authors at the following rates if they are ordered when returning the corrected proofs of the article.

RATES FOR REPRINTS (*postage extra*).

No. of Copies.	4 Pages.			6 Pages.			8 Pages.			10 Pages.			12 Pages.			14 or 16 Pages.			Extra for Cover.		
	£	s.	d.	£	s.	d.	£	s.	d.	£	s.	d.	£	s.	d.	£	s.	d.	£	s.	d.
25 . . .	1	4	9	1	19	9	2	15	0	3	10	0	3	19	9	4	13	6	0	16	6
50 . . .	1	5	9	2	1	0	2	16	3	3	12	0	4	2	3	4	16	3	0	18	0
75 . . .	1	6	6	2	2	6	2	18	3	3	14	3	4	4	9	4	19	0	0	19	3
100 . . .	1	7	3	2	3	9	3	0	0	3	16	6	4	7	3	5	1	9	1	0	9
150 . . .	1	9	0	2	6	6	3	3	3	4	0	9	4	12	3	5	7	3	1	3	6
200 . . .	1	10	9	2	9	3	3	6	0	4	5	0	4	17	0	5	12	9	1	6	3
250 . . .	1	12	3	2	12	0	3	10	0	4	9	9	5	2	0	5	18	3	1	9	0

THE
RADIO REVIEW

VOL. II JUNE, 1921 NO. 6

Editorial.

Earth Aerials.—One of the most surprising features of the war was the long-sustained resistance of the enemy forces in German East Africa. Considerable light is thrown upon one aspect of the campaign by the publication in the current number of *Telegraphen- und Fernsprech-Technik* of an article entitled "Earth Antennæ and their Use in German East Africa." The author was in charge of the wireless station at Dar-es-salam, which possessed an umbrella aerial 100 metres high. This was demolished, however, on August 8th, 1914. Although this prevented further long distance transmission, it actually improved the reception of signals, as it forced the author to experiment with long earth antennæ, with which better results were obtained than with the umbrella aerial. The signals from Nauen had always been so weak as to be almost unreadable. On the night of July 31st, Kamina (Togoland) commenced to transmit, and thus kept Dar-es-salam informed of the progress of events until it fell in September. Windhuk, in German South-West Africa, was first heard at Dar-es-salam on August 2nd, and transmitted information until its capture in May, 1916. By this time, however, East Africa was almost independent of African transmitting stations, because properly adjusted earth antennæ and the introduction of amplifiers led to such improved signals that Nauen could be received directly. Special listening posts equipped with earth antennæ received the messages from Zanzibar, Congo, Massowah, Durban, and the principal military stations of the Allied forces. The information thus received played a large part in the German success in evading the encompassing forces. The aerials employed consisted apparently of a wire suspended at a short distance above the earth. In some cases the wire was connected to earth at one end through the coil of the receiving apparatus, the tuning being done by means of a condenser placed in series or in parallel with the coil. When the length of the wire was about a quarter of the wavelength it was found that this arrangement, contrary to expectations, had very little directive effect, but received signals from Nauen when broadside on to the direction as good as those received on the large umbrella aerial. Better results were obtained on lengthening the wire until one of its harmonics corresponded to the received wave ; this not only gave stronger signals but gave the system a pronounced directive effect, the signals being strongest, of course, when the wire was in the direction of the transmitting station. The receiving apparatus may be inserted in the wire at a potential node without any connection to earth. If it is inconvenient to lengthen the wire it may be arranged as a fork or side wires can be run

Y

out at right angles to it to increase its collecting power. It was found possible to prevent interference between signals of the same wavelength from stations separated by fifteen degrees by running out two separate wires in the directions of the transmitting stations, and making them so long that the third harmonic was set up. Such directive action not only cuts out disturbing stations but also reduces interference due to atmospherics. The subject of earth aerials is one which requires systematic investigation, and one must admire the contribution made to the subject by the German wireless engineers under such great difficulties.

Directional Measurements with the R.A.F. System.*

By J. HOLLINGWORTH, M.A.

I. INTRODUCTORY.

The R.A.F. system of W/T directional measurements is now sufficiently well known to make a detailed description unnecessary.

It has been fully treated as far as war-time developments are concerned by the inventor, Captain J. Robinson, R.A.F.,† and the present paper is in a sense a supplement to this. That such a further development is necessary, is clear from the conditions of the case. Being entirely a war-time product the primary need was its practical application; it was not possible to investigate it scientifically. At the same time it is this stage of its development with which most of those who can claim any practical experience with the system are acquainted; with the result that its capabilities and limitations are not fully understood. To investigate these in fuller detail has been the object of this paper; and to see what results could be expected with proper care in the design. This may in some cases have resulted in a considerable departure from the original ideas and methods of the paper referred to above; but this is inevitable in any subject while in process of development.

At the commencement a short historical note will not be out of place. The system was invented during the war for use in aeroplanes, which is of course a very specialised application, with its own set of conditions. For instance, in the small aeroplanes to which it was originally applied, the primary need was a loud signal in order to overcome the various engine noises. Accuracy was a secondary consideration as with such small machines, except on a very calm day, the pilot could not hold the machine sufficiently steady to make an accurate reading possible. Later it was applied to larger machines; but for many reasons its full capabilities were not investigated at the moment. At the time of its invention in 1917 the need for some such system was extremely

---

* Received November 24th, 1920.

† Paper read before Section G of the British Association, 1919—see RADIO REVIEW, 1, pp. 39—42, October, 1919, for abstract; also pp. 213—219, February, 1920, and pp. 265—275, March, 1920, for fuller description.

urgent. As soon as it was found to be practicable it had to be brought into use; there was not time to investigate the many points of minor importance which always arise in a new system. Production and experiment had to go on simultaneously; with the result that none but minor modifications could be introduced without upsetting the production.

Also during this period there were generally not more than two experimenters at work on the subject; and all their time was taken up with the mechanical question of installation in new types of machines and the overcoming of the more obvious troubles and difficulties which presented themselves. Naturally under these conditions detail work was out of the question; many interesting points were, as a matter of fact, noted and deliberately put aside for consideration in less strenuous times.

There was no general body of experience to guide the investigators, they had to rely, both in theory and application, almost entirely on their own personal experiences.

It is not of course claimed that the results are in any way complete even yet, there are still applications and conditions which have not yet been touched.

II. GENERAL DETAILS OF THE SYSTEM.

(*a*) *Constructional.*

The set on which most of the work in the paper has been carried out is home-made. It consists of a wooden stand about 6 feet high and 6 feet long with a cross-bar about 2 feet from the floor carrying the lower bearing. Being intended for general experimental work, it is constructed to give as much flexibility as possible. In most coil sets the bearings are connected directly to the coil frames, but in this set they are fastened to two wooden platforms each 1 foot square; the upper one being adjustable for height. The coils are fastened to these platforms by means of thumbscrews so that any coil system, within certain size limits, can rapidly be fixed in position. This gives great freedom for experimental work, but only at a sacrifice of a certain amount of mechanical accuracy and rigidity. It was not expected when the coil was built that such a high sensitivity would be reached as has been actually obtained, so that now it is seen that sturdier construction would have been advisable. It was originally designed for the purpose of investigating the well-known temporary variations in the directions of W/T signals and for this purpose it was hoped to reach an accuracy of about 1°. With careful handling however the set can be worked to $\frac{1}{4}$°.

The leads to the coil are carried through the lower spindle, which is hollow, and then cleated to the frame; the necessary gear being fastened to one of the upright sides. The coils are of box form, the main coil (adopting the usual notation) being 3 feet 6 inches square, the auxiliary 5 feet 6 inches long and 3 feet 6 inches high. Theoretically there is an electrical difference between coils of different patterns but when the set was built this was left for later consideration.*

---

* A. S. Blatterman, *Journal of the Franklin Institute*, 188, pp. 289—362, September, 1919—RADIO REVIEW Abstract No. 144, January, 1920.

As at present arranged the set works over a wavelength of 2,000—15,000 metres, and with a home-made amplifier a sensitivity of ¼°, representing a movement of about ⅐ inch of the outside edge of the coil, can be obtained. (To avoid confusion in the later part of the paper it is necessary to draw a definite distinction in the use of the words " sensitivity " and " accuracy." A sensitivity of say ¼° will invariably mean that if a balance be obtained and the coil frame then shifted ¼° the signals on reversal will be audibly out of balance. It has no direct connection with accuracy of direction, which will mean that the direction obtained is the true direction, of the incoming waves. It is thus often possible to have high sensitivity together with low accuracy.)

Two great points that can be urged in favour of the system are simplicity and portability.

The set referred to throughout this paper is self-contained in a wooden frame about 6 feet high and 6 feet long. Excluding the amplifier and its accessories the entire gear weighs about 40 lbs., and could probably be constructed for £10 to £20. The whole apparatus could be put on a truck, taken to a new place, and, with the help of a compass or point of sight to obtain correct orientation, would be ready to take bearings a few minutes after its arrival. It requires no outside connections and can be used in any room reasonably free from metal work which might cause distortion. For special and more permanent purposes coils have sometimes been mounted above the roof of a special hut and rotated by gear from inside. On the electrical side it contains only one tuned circuit, accurate tuning of which is unessential except in very special cases.

(*b*) *Operational.*

The actual direction, as is well known, is obtained by finding the point at which the signal strength is unaltered on reversing the connections of one of the two coils. It is thus a definite point and does not require the taking of the mean between two positions. This is especially useful when watching for variations on a particular station, as it is not necessary in this case to be continually taking fresh readings. The set is balanced on the station at the start, and then all that is necessary is an occasional movement of the reversing switch. As long as the signals still remain of equal intensity there is no necessity for any further movement of the coil, and the bearing is known not to have changed; but as soon as a variation is noticed, the coil is shifted to the new position, giving at once the change of direction which has occurred.

One of the objections which is most frequently brought against the system is what is known as the 90° ambiguity; that is, that it is theoretically possible to obtain a balance of signal strength at a position exactly 90° away from the true bearing. Cases of this have undoubtedly happened. With the original coils and apparatus it was much easier than it is now; and most of the causes of such error which did occur were with partly trained operators on one of their early flights.

Under such conditions errors are bound to arise, but with a better designed coil it is far more difficult to obtain a wrong bearing than a correct one.

As this is a point of great importance it really needs to be discussed in more detail. The original standardised way of eliminating this error was by the use of what was known as a balancing coil. By moving a switch the auxiliary coil is cut out and replaced by a small coil of the same inductance which is supposed to pick up no energy. A rough maximum is then found, the auxiliary coil is switched back, and balancing proceeds in the usual manner. This worked moderately well when the two coils were of nearly equal size, and if they are exactly the same size it is essential. Now however the tendency is to make the auxiliary coil considerably larger than the main coil (the question of the exact ratio will be considered later), and as this difference in size increases, the difficulty of obtaining the true bearing by this method grows very rapidly. The reason is as follows. The preliminary search is for a maximum signal; and owing to the well-known flatness of such maxima it is often impossible to be sure of getting an accuracy of more than 10° at the best. Now with a large auxiliary coil it does not take a deflection of many degrees from its zero position to produce in it an E.M.F. actually greater than the E.M.F. in the main coil. So that when an approximate maximum is found and the auxiliary coil switched back, it may introduce into the circuit an E.M.F. greater than the one in the main coil. Under these conditions reversal produces quite abnormal effects. Moving the coil frame in one direction (the direction which tends to reduce the auxiliary coil E.M.F.) results in a decrease of signal strength for both positions of the reversing switch, the weaker one falling rapidly to zero, the other more slowly. Operators do not understand that if this happens they must pass through the position in which one signal is zero; as soon as they find the difference between the signal strengths getting greater they start moving the coil in the opposite direction. Movement in this other direction causes an increase for both positions of the reversing switch, though the difference between the two signal strengths decreases owing to the E.M.F. of the main coil becoming negligible compared with that in the auxiliary coil, which occurs at or near the 90° error bearing. So that if, owing to the flatness of the maximum signal, the approximate bearing first selected is more than a few degrees separated from the true bearing, this method of search actually leads directly to the 90° error unless the operator has a sufficient theoretical understanding of the method to grasp what has happened. But by adopting a slightly different method of search this trouble is entirely eliminated. The very conditions which cause a decrease in the case of working the first method increase the certainty of this second method, which only fails when the two coils are exactly equal. It has been pointed out that this is never the case with a modern coil set. Also this method requires no balancing coil or switch. The following are the operations required:—

(1) Put the reversing switch to one side and find very roughly the minimum position (unlike the previous method an error of 5° is quite unimportant).

(2) Move over the reversing switch, the signal will increase in strength.

(3) Find roughly the new minimum position *nearest to the old one*. In coils with modern ratios there will be no ambiguity here, these zeros are 15°—20° apart whereas the wrong zero is of course 70°—75° away. If necessary, however, (3) can be written in another form which is perfectly definite by saying:—

Turn the coil in the direction which causes a decrease in signal strength until the new zero is reached.

(4) The true position is between these two zeros and is found in the usual way.

This method is invariably used by the author, and by several operators who thoroughly understand the system and have deduced it for themselves. It is just as quick as the old method and far easier to work in coils of normal ratios. It also eliminates a trouble sometimes present in the old method, that on powerful stations the pick-up of the balancing coil and its leads was not negligible, which flattened the maximum even more. In actual working the whole operation can be picked up in two minutes by anybody of average intelligence, and once grasped it becomes automatic in a very short time. Of course in coils constructed for an abnormally high sensitivity it requires more care, but this is a fact which holds equally truly for any physical measurement of any sort whatever; unskilled observers can never get results of high accuracy.

III. Errors.

Some attention must now be given to the errors which are likely to arise in any D.F. system. These can be divided into two classes: (*a*) amplifier and reactive troubles, (*b*) extraneous E.M.F.'s induced in various parts of the circuit.

(*a*) When this set was first constructed trouble was experienced with the amplifier. This was a home-made resistance type amplifier with six valves. It showed considerable tendency to oscillate unless its amplifying power was kept low, and, what was more serious, movements of the operator when reaching out to turn the coils altered the capacity distribution sufficiently to shift the apparent bearing 2°, and often to set the amplifier oscillating. This was probably largely due to the design of the amplifier, but it was cured by fitting a two-valve note amplifier, and by inserting a radio frequency transformer between the coil and the amplifier, so that the leads to the amplifier no longer formed part of the tuned circuit, and also a transformer in the telephone circuit. A resistance amplifier was adopted intentionally, as it had previously been found that with the transformer amplifier on a table close to the coil, radiation from the transformers into the coils upset the readings, especially on wavelengths near the natural frequency of the amplifier transformers, which is generally the point at which such amplifiers are intended to work. This could no doubt be cured either by shielding the transformers or by having the coils on the roof at some distance from the amplifier, but where simplicity and portability are required a resistance amplifier seems to be the simplest solution.

(*b*) Extraneous E.M.F.'s are caused either by small E.M.F.'s induced in the leads of the coil circuits or any subsidiary circuits which may exist (especially if the latter have any tendency to a natural frequency near the working frequency); by what is known as " vertical " or " antenna " effect, the whole system acting as a capacity to earth; or by the effect of certain factors depending on the size and shape of the coils. Theoretically they may be divided into two classes according as to whether they are in phase with the working E.M.F. or 90° out of phase with it, and it is therefore sufficient to consider these two cases only.

(i.) E.M.F.'s in phase with the signal. Provided such E.M.F.'s do not reverse with the operation of the reversing switch, which means that the leads from the coil under reversal must receive special attention, the only effect of such "pick-ups" is to cause a slight alteration in the apparent strength of the main coil. They have in this case no effect on the directional accuracy. In a pure minimum system such E.M.F.'s of course produce a false zero, the coil has to be displaced until an E.M.F. is induced in it to exactly counterbalance the disturbing E.M.F. They are also extremely difficult to detect.

(ii.) E.M.F.'s 90° out of phase with the signal. The effect of E.M.F.'s 90° out of phase, is, as is well known, to blunt the minimum effect, so that for accurate work on a minimum method special care has to be taken to eliminate them. In the R.A.F. system it will now be shown that unless they are abnormally large the difference they make in sensitivity is negligible.

Consider for simplicity displacements of 5° on either side of the zero position of the auxiliary coil, over this range the E.M.F. induced in this coil may be taken as proportional to the angle of displacement. In Fig. 1 let the vector 0A represent the E.M.F. at a displacement of $-5°$; then 0A′ represents the E.M.F. at $+5°$, intermediate lengths representing the E.M.F.'s at the corresponding intermediate angles. Now any such 90° E.M.F. which may be present will be represented by a constant vector 0C at right angles to 0A; so that the total E.M.F. at $-5°$ is given by the vector CA, at $+5°$ by CA′ and similarly at other points. The resulting signal strength merely depends on the length of these vectors and not on their sense, so that it may be shown in a more convenient form as in Fig. 2. In this figure the abscissæ are as in Fig. 1 the angular displacements of the coil.

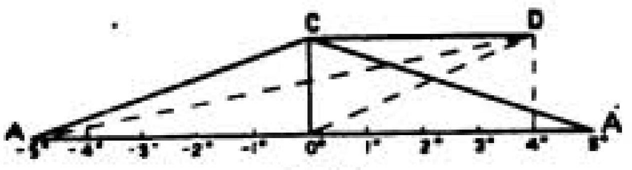

FIG. 1 (*a*).

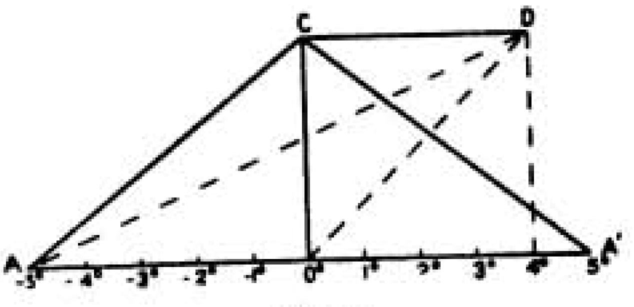

FIG. 1 (*b*).

The ordinates are the appropriate signal strengths, *i.e.* the ordinate at $-5°$ in Fig. 2 is equal in length to CA, at 0° to C0, at $+5°$ to CA′. In this way a curve is constructed giving the magnitudes of the E.M.F.'s induced in the coil system at various angular positions; and so, neglecting the amplifier factor, giving the signal strengths of these positions.

This curve has been constructed for two cases.

(1) Small vertical effect, producing an E.M.F. equal in magnitude to the displacement of the coil through 1°. (Curve B.)
(2) Large vertical effect four times as great as in case (1). (Curve A.)

These two curves give therefore the E.M.F.'s of the coil in the neighbourhood of its minimum position and show the extreme flattening of the minimum especially in case (2). Now, returning to Fig. 1, consider the case of the R.A.F. system. The addition of the main coil will produce a third E.M.F. in the circuit. This E.M.F. will be practically constant over the range considered, since the main coil is in its maximum position and will be in phase with 0A, it can therefore be represented by a vector CD of constant length parallel to AA′. The E.M.F.'s induced in the coil system will now be, for the various displacements, given by DA, D0, DA′, instead of CA, C0, CA′ as previously.

These have been plotted in Fig. 2 in the same way as for the minimum coil. It will be seen that in both the minimum and the R.A.F. systems the slope of the curve at 0° is a measure of the sensitivity of the system considered. (Curves C and D.)

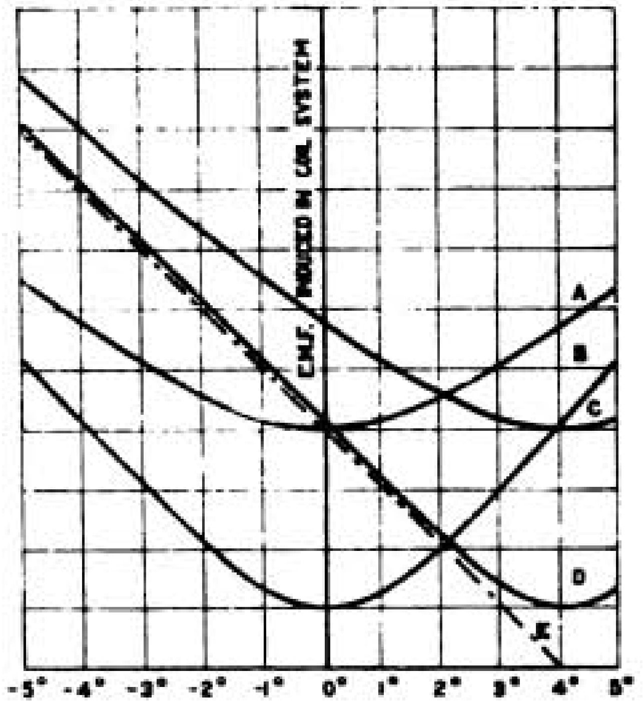

FIG. 2.

This is obvious in the ordinary method and in the R.A.F. method it follows from the fact that owing to the symmetry of the vector diagram the curves obtained in Fig. 2 on reversal are the images in the y axis of those obtained before reversal. For the purpose of comparison another curve has been plotted in Fig. 2 for the case of the R.A.F. system when the vertical effect C0 is zero. (Curve E.)

Now on examining the curves for the R.A.F. system at the 0° position it will at once be seen that the effect on the slope of the curves at this point, even when considerable vertical effect is present, is quite small, whereas the effect on the corresponding cases for the minimum coil is considerable. Moreover the value taken for the main coil E.M.F., CD in Fig. 1, is probably smaller than that actually used, and from the diagrams it follows by inspection that the larger CD is in comparison with C0, the smaller the departure from the ideal case due to antenna effect. Hence the R.A.F. system is only slightly affected in sensitivity by the presence of such extraneous E.M.F.'s and no special adjustable compensating devices are required to eliminate them.

The question has now to be discussed as to where in the circuit such E.M.F.'s are likely to occur: their phase relations and the methods of detecting and eliminating them. They may be expected in more or less degree in the following places :—

(I.) Pure " coil effects " (*i.e.* in phase with the signal) in the leads and connections of the main coil.
(II.) Ditto in the leads and connections of the auxiliary coil.
(III.) Pure " vertical " or " antenna " effects in these coils.
(IV.) E.M.F.'s induced directly in the primary or secondary windings of the radio-frequency transformer.
(V.) Coil shape effects.
(VI.) Re-radiation from the transformer into the revolving system and *vice versâ.*
(VII.) Re-radiation from the amplifier.
(VIII.) Variable capacity effects.

Each of these has to a large extent its own distinctive symptoms and effects, and requires its special cure. (It will be assumed at present that the auxiliary coil is the one which undergoes reversal.)

Errors (I.) have no effect on the directional accuracy, they merely cause a slight change in the apparent strength of the signal. They do not need therefore further discussion. (II.) Owing to their occurrence in the part of the circuit which undergoes reversal these E.M.F.'s cause a definite error in the directional accuracy. As however the only part of the system in which they can possibly occur is in the leads between the terminals of the coil undergoing reversal and the reversing switch, these leads should be as short and as close together as possible. By mounting the reversing switch on the coil frame they can be entirely eliminated, but in general it is hardly necessary to do this.

Unlike certain other errors they do not cause any 180° inaccuracy, that is if a bearing be taken with the coils turned round it is exactly 180° from the original bearing. This makes them extremely difficult to detect and the following procedure has been adopted which, though not absolutely proving their absence, makes it likely. The bearing and reversed bearing are taken, and if no other errors are present they should be exactly 180° apart. (For this purpose it is best to work on a wavelength near the upper limit of the set.) The connections are now changed so that the main coil undergoes reversal and the two bearings again taken. If the bearings now obtained are different from the previous ones but retain their 180° accuracy it means that the pick-up in the main coil leads is different to that in the auxiliary coil leads. But if they are the same it means that these two pick-ups are exactly equal which is unlikely since they come from different parts of the circuit which can be arranged in different positions on the frame. It is then assumed, though the proof is not absolute, that these pick-ups are negligible.

Though affecting the absolute accuracy they do not affect the sensitivity.

(III.) " Vertical " effect is in general 90° out of phase with the signal E.M.F. and is practically independent of the orientation of the coils. It produces a flattening of the minimum, and in some cases affects the 180° accuracy of the reversed bearing which will be dealt with later. It has already been shown that the first of these, unless excessive, has very little effect on the R.A.F. system. In general it is probably much less in the case of a coil of small dimensions than with a large aerial: Blatterman[*] states that it is roughly proportional to the height of the coil. Various methods have been suggested for eliminating it if necessary but some of them are rather complex and in the case of the R.A.F. system its effect is probably negligible for sensitivities of ½° and over, especially if, as suggested by Captain Round,[†] the tuning condenser is not of too small a value. Any appreciable errors with this phase relation which occur probably come from other parts of the system.

(IV.) These errors are due to the presence of the transformer and it would seem that the easiest way of eliminating them would be to omit it. This brings in still worse errors. If it is not there the leads to the amplifier form part of the tuned circuit, and consequently pick up E.M.F.'s far more easily than they would do if untuned. It must not be forgotten that though the main tuning inductance of an oscillating circuit may be completely shielded, small leads in that circuit have a picking-up effect out of proportion to their actual size compared with what they would have in an untuned circuit. Also it brings the coil windings into direct metallic connection with the amplifier circuits, and so through the telephones with the operator, so that any movements of his tend to vary the capacity of the system to earth to a serious extent.

It also eliminates a trouble frequently found in the early sets that momentary bad contacts in the switch during reversal caused loud crashes and howls in the amplifier due to isolation of the grid of the first valve. This interferes with the judgment of signal strength.

E.M.F.'s induced in the primary of the transformer are in phase with the main E.M.F. and as this is a non-reversing part of the circuit they are similar to those in case (I.) and can be neglected. But if induced in the secondary winding it can be seen from a study of the phase relations that they produce a current 90° out of phase with the signal current and thus produce the same results as " vertical error." As in that case if small they can be neglected, but to guard against any danger it is well to design the transformer so that its natural wavelength when connected to the amplifier is well below the lowest wavelength to be used.

This is not difficult if the required wavelength range is small, but if a large range is required it is not easy to get a transformer with a sufficiently high natural frequency which will at the same time transfer sufficient energy at lower frequencies. (V.) and (VI.) produce similar very distinctive effects, and it was some time before their cause was suspected. (VI.) is of course more prominent when the direction of the station is such with regard to the frame that one side of one of the coils is near the transformer. In the case where the effects were most observed the transformer was unsatisfactory owing to its natural wavelength being too long so that the effect of (VI.) was

---

[*] *Loc. cit.*

[†] H. J. Round. Direction and Position Finding. (*Journal of the Institution of Electrical Engineers*, 58, pp. 224—257, March, 1920.)

large compared with that of (V.) and with a more suitable transformer the effect was reduced, but except in special cases it still remains owing to (V.). In the case observed the auxiliary coil was nearer the transformer and if reversal were made on the auxiliary coil, of the two minima referred to on p. 285, one was extremely blunt, and the other sharp; the same holding for the reversed (180°) bearings. If however the reversal were made on the main coil, one pair of minima were very sharp, the other pair very blunt.

Now both (V.) and (VI.) can be shown to produce this effect. (V.) is caused by currents passing through the main condenser and then across the coil due to capacity between turns.

The driving E.M.F. of these currents arises from the fact that in a box coil the voltage between successive turns is not zero since these turns are in different planes. "Coil shape" effect thus causes a current which, being untuned, is 90° out of phase with the signal current and it is also directive reaching the maximum in the position where the main signal coil E.M.F. is zero and *vice versâ*. With a pancake coil it is zero always. It thus behaves in the neighbourhood of the true bearing position like a "vertical" effect which is constant for small displacements but which changes sign if the coil be tuned through 180°.

Since the pure "vertical" E.M.F. does not change sign under these conditions and the two are in phase it follows that for one position of the coil the resultant E.M.F. is the sum of these two, but for the 180° position it is the difference.

If therefore these two can be made equal, perfectly sharp zeros will be obtained for one pair and very blunt for the other pair. Either of these pairs will lead to a true bearing provided no other errors are present though of course the sensitivity of the blunt pair will be much lower, it is only important to see that the "coil shape" E.M.F. does not reverse on operating the reversing switch. This can be ensured by always reversing the main coil, since owing to its few turns this current in it must be very small. As regards (VI.) it will be seen that if the auxiliary coil be reversed the relative phases of the E.M.F.'s induced in the secondary of the transformer due to direct inductance from the auxiliary coil and from the primary of the transformer will also be reversed, but this will not occur if reversal is made on the main coil which is so much smaller than the auxiliary coil that its inductive effect can probably be neglected. Hence if a box coil be used of such proportions that the "vertical" E.M.F. is equal to the "coil shape" E.M.F. sharp errors will be obtained. Both these effects diminish rapidly as the wavelength and the main tuning capacity increase.

(VII.) opens up the whole question of the amplifier. There is no doubt that for directional work the ideal for the amplifier is very different to that which is required for ordinary work. In the latter the main object is maximum amplification, subject to reasonable ease in operating. For directional work everything else has to give way to stability. There must be no risk of variations in the amplifier. For this reason any effect involving reactive coupling or critical adjustments must be viewed with the utmost suspicion, and it appears likely that the most suitable form is a resistance amplifier with a large number of valves to compensate for their being worked under stable and so relatively inefficient conditions.*

In a transformer amplifier also, there is, as referred to above, the effect of radiation from the transformers into the receiving coils and their own picking-up effect if worked (as they generally are) near to their natural frequency. Such errors may have any phase relations depending on the amplifier connections and adjustments.

(VIII.) has been partially referred to on p. 286; but comes in in another form also. The "vertical" effect has been assumed constant for all positions of the coil. There is no direct evidence on this point and it would be extremely difficult to obtain, but it is well to note that if it does vary (for instance when the coil is close to one of the side frames), the effect would be to cause the curve in the neighbourhood of the zero to be unsymmetrical, so that the true bearings would not be half way between the points of equal intensity. There is however little experimental evidence of such an occurrence so that it is at present fair to assume the zero to be symmetrical.

Effect of Stray E.M.F.'s on Absolute Accuracy.

In the above discussion with the exception of case (II.) the effect of the induced E.M.F.'s considered has been to affect the sensitivity rather than the absolute accuracy. There is much evidence to show that in certain cases the latter is also affected, and some of the assumptions made above require slight revision.

The question of equal intensity of "vertical" E.M.F. for all positions of the coil has already been mentioned, but it has also been assumed that the various circuits have either been exactly tuned or that the currents induced in them have been exactly 90° out of phase with the E.M.F.'s. Now many of these circuits have an appreciable resistance so that the possibility of an intermediate phase angle is always present. Also while the phase relation between incoming wave and "antenna" current is fixed, that between incoming wave and working current depends on the tuning of the main circuit. Thus theoretically it is possible, by varying this tuning, to produce any required phase relation between the "vertical" current and the main current.

Now if from any cause such an E.M.F. produces a component of current in phase with the main current, the effect may come under case (II.) and produce a false bearing. Moreover if the coil be tuned through 180° all the E.M.F.'s with the exception of this E.M.F. will be reversed when there will be produced not only a false bearing but one not at 180° from the other one.

It has been found by actual experiment that by varying the tuning of the main circuit these effects can be sometimes produced. The zero or point of balance can be shifted at will and also it is possible by slight mistuning to find a point where the zero is very sharp. Unfortunately this is by no means necessarily the position of true bearing, it merely shows that any "vertical"

---

* C. L. Fortescue. The Design of Multiple-stage Amplifiers using Three-electrode Thermionic Valves. (*Journal of the Institution of Electrical Engineers*, 58, pp. 65—82, January 1920.)

effect which may be present is practically in phase with the main current and therefore that its disturbing effect on the bearing is maximum.

The above discussion of errors is long, but an attempt has been made to deal fairly fully with their diagnosis and cure. Some of the deductions may be incorrect as it is very often impossible to vary the conditions in just such a way as to give absolute proof. It is rather a case of drawing inferences from a limited number of data available. Generally speaking, elimination of errors seems to be rather a question of careful design than of the use of special devices.

Summarising these results the following precautions appear to be advisable.

(*a*) If possible when working on the lowest point of the wavelength range have a fair value of tuning capacity.

(*b*) Always reverse the main coil.

(*c*) If sharp and blunt minima occur readings taken on the sharp side will be accurate provided they do not vary as the value of the main tuning condenser is shifted.

The "coil shape" effect can be eliminated by using a "pancake" coil; but only at the expense of an increased "vertical" effect. If the box coil can be so arranged that the two balance the results will be satisfactory.

IV. Design.

In the early days of the system coils were of course constructed mostly by guesswork, and in many cases their chief dimensions were fixed by the size of the space available for their reception. More careful study has now made it possible for them to be more truly designed; and, given a free hand in dimensions, it should be possible to construct a coil to a given performance specification. The general lines of such design will now be given.

Coil Sizes.

The early rule was to work from the maximum permissible inductance and divide this between the two coils so as to give a pre-determined ratio between them.

This is the method suggested by Captain Robinson in his paper, but the objection to it is that his constant K has to be arbitrarily determined. This constant, as will be seen later, is a function of coil size as well as of sensitivity required, so that a large amount of experimental information is required in order to determine K for a given accurate value of sensitivity.

With small cramped coils this is still the only possibility; but where more space is available the problem should be treated rather differently. The fundamental quantity is of course "area-turns" of a coil (the summation of the frame area for the number of turns) this being the quantity which determines the E.M.F. induced in it. Now for a given value of area-turns, the smaller the coil frame the larger the inductance, hence in small spaces it is often difficult to get the value of the area-turns sufficiently high without getting near to the safe limit of capacity required to keep the amplifier from oscillating. In this case special care has to be taken to keep down the capacity of leads, etc.

When space permits it is better not to work to the full limit of inductance available. The question of leads is not then such an important factor and also the set will be much more stable. Longer waves can be obtained by increased capacity, as the efficiency of an amplifier does not fall off very rapidly with increased capacity in the circuit. Quite a good signal has been obtained from **P O Z** on a coil about 3 feet square with 48 jars across its terminals though this was an extreme case.

Naturally a set which is only required to work on a single wavelength can be made much more efficient than one which has to give reasonably good results over a big range, both as regards amplifier and the coils.

When more freedom as regards dimensions is possible, the design of coil size should be tackled as follows.

The area-turns of the main coil determine the signal strength ; those of the auxiliary coil the sensitivity. Hence each should be considered on its merits, bearing in mind that there is a limit to the value of their combined inductance. With coils above a certain size, depending on the wavelength to be received, the inductance of the main coil will not be more than about 10 per cent. of that of the auxiliary coil since the inductance falls off nearly as the square of the number of turns.

Consequently the area-turns of the main coil can be varied within considerable limits without making much alteration to the total inductance, so that the two coils can be designed nearly independently.

The area-turns of the main coil are settled by the required signal strengths on a given station. This of course must be roughly known for the particular amplifier employed. Now if the set is to be sensitive to, say, less than 1°, the area-turns of the auxiliary coil must be of such a value that by a displacement of 1° an E.M.F. will be induced in them sufficient to make an audible change in the signal strength.

The area-turns of both having been thus determined the coil dimensions can be calculated from the inductance available. But this involves a factor which has only recently been made the subject of experiment. The problem may be stated thus :—

(I.) For a given signal strength what is the least change which is distinctly audible ?

(II.) How does the magnitude of this change vary with the original signal strength ?

The answer to this involves three factors, the operator, the telephones and the amplifier. The last is a purely W/T problem, but the first two together form a partly physical and partly physiological problem which can only be answered by experiment.

Such an experiment has therefore been conducted on the following lines. Signals from a buzzer or audio-frequency alternator are passed into a telephone circuit, their strength being directly under control of the listener, who varies the adjustments until a definite change in intensity is audible, when the change is measured electrically.

The difficulty of measuring un-amplified radio-frequency signals to any degree of accuracy is sufficient to require a second experiment to itself, and it would only make the experiment described below impossibly complicated; so that it was decided to investigate the factors separately rather than in combination.

In Fig. 3 A is a buzzer or alternator providing the test signals. The working current is controlled by a resistance R of about 40 ohms. This serves two purposes; it regulates the current in the buzzer to its best working value, and also allows the range of test signals to be varied considerably. Shunted across R is a potentiometer P consisting of two barrels each of 37 ω connected in parallel. Each barrel has its separate slider. These sliders are connected to the back and front contacts of the Morse key K. The centre contact of the key is connected to the telephones T and back to one end of the potentiometer. L is a coupling coil by which interference signals from the buzzer A_1 can be introduced if necessary.

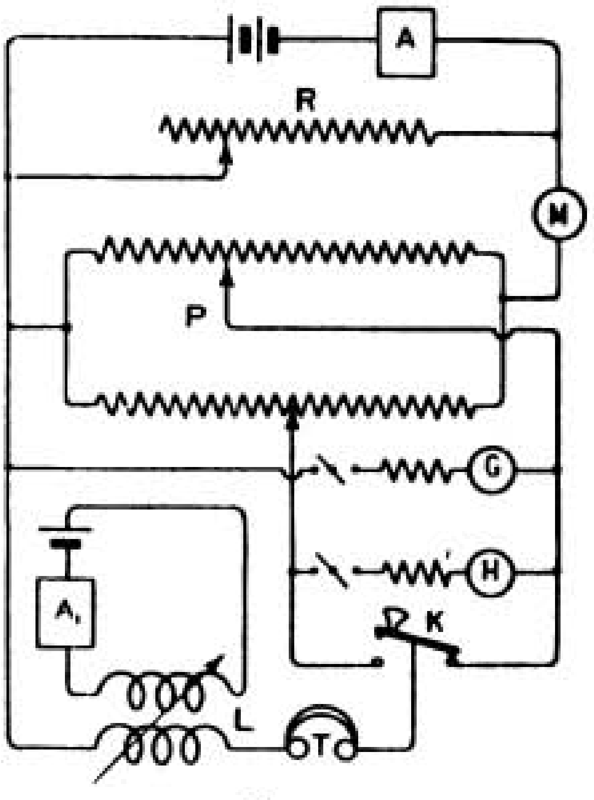

FIG. 3.

The action is as follows: The buzzer A is set working and the current taken by it produces a difference of potential between the terminals of R. This difference of potential also occurs in P, which is across the terminals of R. A sound will then be heard in the telephones whose strength depends on the position of the upper slider. But if the key K be pressed the strength of the sound will be determined by the position of the lower slider.

The upper slider is set to any convenient signal strength, and the listener then operates the key, and moves the lower slider until the least definite difference of signal strength is noticed for the two positions of the key K. H is a microammeter of known resistance with a key, the depression of which gives the difference of voltages between the two sliders. At the same time the potential between the upper slider and the end of the potentiometer is given by depressing the key of the high resistance reflecting galvanometer G. The ratio of the reading of H to the reading of G when multiplied by the instrument constants thus gives the ratio of the difference between the two resistances under the potentiometer sliders to that under the top slider. Now whatever be the relation between the current and the signal strength, if one assumes that the pulsating current giving the signal is proportional to the displacement of the potentiometer slider, this ratio of H to G is the ratio between the increment of signal strength and the original signal strength. This assumption is probably true since a potentiometer "divides" alternating current in the same ratio as continuous current so long as the end effect of the inductance formed by potentiometer barrel is negligible, or the inductive effect is negligible compared with the resistance effect.

The readings of G are comparative values of signal strengths, provided that the buzzer does not vary appreciably during the test. To ensure this as far as possible a buzzer which gives an extremely steady note is used, and also a milliammeter is placed at M, and readings only taken when this is steady at a definite value. Even when using the alternator the battery is retained in order to operate the galvanometer, its function then being merely to provide the necessary C.C. potential difference for the resistance measurements. It has no direct influence on the signal which in turn has no direct effect on the galvanometers whose moving parts have high moments of inertia. To obtain a comparison between tests at different times, at some time during the test the top slider is moved to the extreme left and a bottom slider adjusted until a just audible signal is obtained. The ammeter H then gives the volts drop corresponding to a just audible signal. This was of course a very rough comparison, and did not give very satisfactory results owing to slight leakages of signal current ; with the present arrangement it is not possible to use a shunted telephone method owing to the disturbance which would be caused in the voltage distribution by such shunting. To employ this a telephone transformer would have to be used, but fortunately, as will be seen later, the results come in such a form that accurate comparison is not essential.

The telephones at present being used for the test have a total resistance of 5,600 ohms so that their shunting effect on the potentiometer is negligible. For low resistance telephones the transformer would again be required. The instruments H and G only take a few microamperes each and as the current in M is of the order of 10 milliamperes their shunting effect can also be disregarded.

The results obtained are exceedingly interesting but require careful consideration. Many factors such as fatigue, external noises, and the psychological factor of self-deception come in, so that a certain number of readings obtained are bound to be abnormal. Moreover H measures a small difference in voltage to a high degree of accuracy, far higher indeed than the ear can detect, so that quite large variations in H are bound to occur. The apparatus is intentionally arranged so that it is almost impossible for the observer to adjust his results either consciously or unconsciously to the desired value. During the actual determination of the slider position neither galvanometer is reading, and even after their readings have been obtained they indicate little until various arithmetical operations have been carried out on them.

The first series of tests were taken in a moderately quiet laboratory without interference from the buzzer A_1 ; and the range of signals was from practically inaudible to about " R-10," *i.e.* within the ordinary working range. Two of the observers were accustomed to the use of the R.A.F. system and were also trained scientific observers, while the third was a laboratory assistant, who had been an operator during the war but had had no experience in such measurements. Naturally, the results of the first two were at first more consistent than those of the third who has however improved rapidly with practice.

The curves are given in Figs. 4 to 9.

Before discussing them in detail it is necessary to explain them slightly. The abscissæ (which are really milli-volts measured on galvanometer G) are taken as proportional to signal strength as mentioned above.

The same proportion holds for all the points on any one sheet but does not necessarily hold between the curves on different sheets owing to different adjustments for different buzzers.

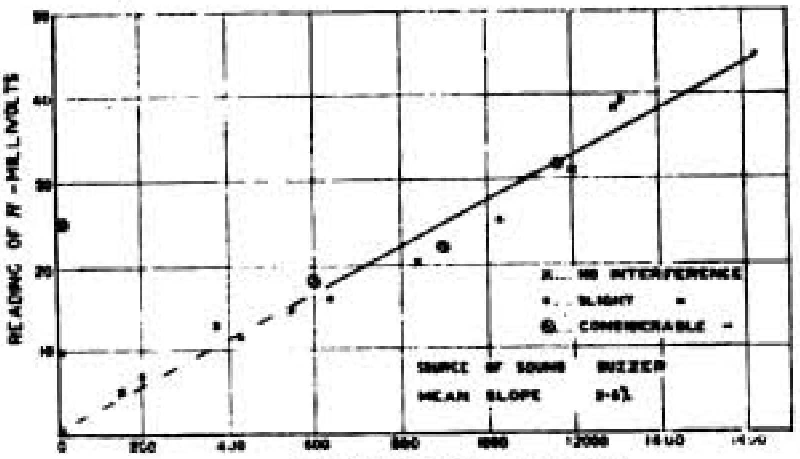

FIG. 4.

The results all correspond to signals of a maximum intensity of about "R-10" and as will appear later owing to the particular shape of the curves obtained the absolute value is of secondary importance.

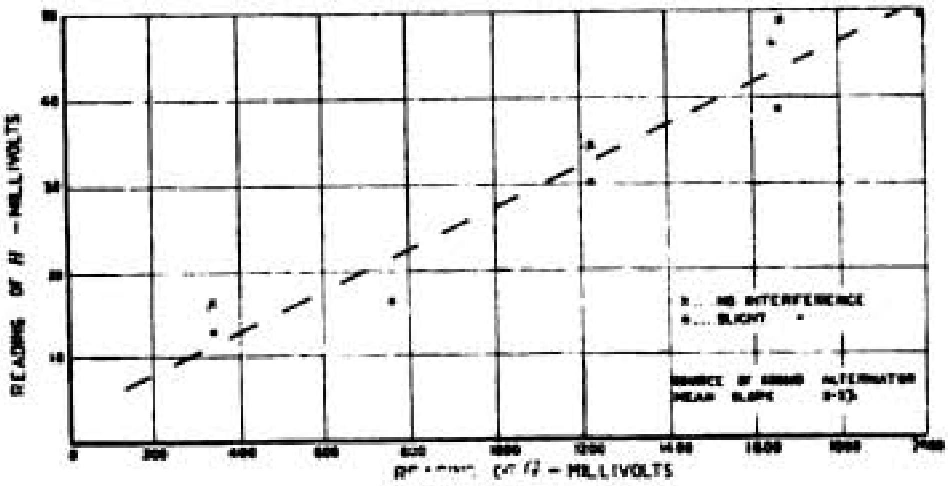

FIG. 5.

The ordinates are the milli-volts measured by galvanometer H, so that the ratio of ordinates to abscissæ gives in every case the percentage change in signal strength which is just audible at that particular signal strength. This will in future be referred to as the "critical change." It is owing to this ratio being approximately constant for each single experiment that the question of accurate absolute determination of signal strength is not so vital. Each sheet contains the tests by a single observer on the same buzzer under various conditions of interference. The two sources of sound were :—

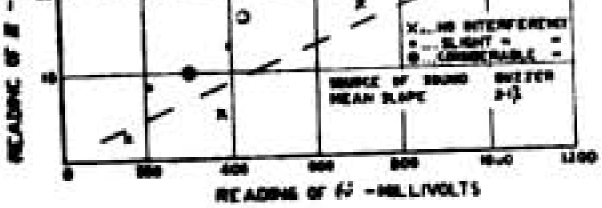

FIG. 6

A buzzer giving a high pitched musical note.

An alternator giving a very pleasant mellow musical note nearly an octave below the buzzers.

The interference in each case consisted of a constantly vibrating buzzer of low frequency producing a whirring noise. "Slight interference" corresponds to a signal strength about "R-3," "considerable interference" to one of about "R-7." The difference in the quality of the sound was so great that no possible confusion could arise. In discussing these curves the personal factors will be considered first. Figs. 4 and 5 were obtained by the author, 6 and 7 by his assistant, 8 and 9 by a colleague. The mean curves on each sheet have been drawn as fairly as possible, but it will at once be admitted that in measurements of this type which contain other than purely mathematical factors the accuracy and consistency will not be very high. The vertical scale is also large compared with the horizontal.

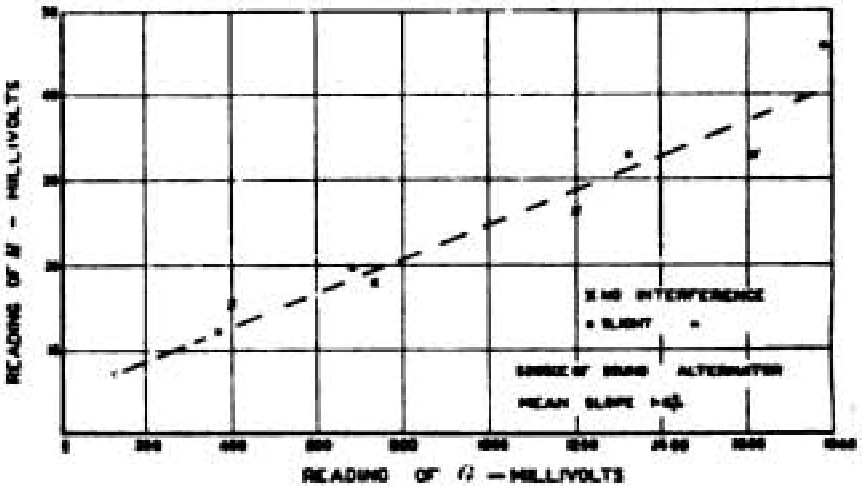

FIG. 7.

The first four are approximately straight lines, but the author's lines in each case give definitely steeper slope.

This is probably due to two causes; the author has found that his hearing is slightly less keen than that of the average operator, and also his experience has led to his always working for a very definite variation in audibility. In this experiment, as the difference between the signal strengths for the two key positions is increased, one passes from a stage of no audible difference, through a stage of barely perceptible difference to a stage of definite difference. The range of the second stage varies so much with such factors as fatigue that it is always safer to work to the third stage. The figures may be larger but they are far more consistent. As a matter of fact each point shown is the mean of several readings, and by working always to the third stage the individual results approach much closer to the mean. The curves of Figs. 8 and 9, however, show a distinct upward tendency. They were obtained by his colleague Mr. Hoyle who has had considerable W/T experience and who admits that he has a great physical dislike to loud signals and always works with the weakest signals possible; so that this upward curve is probably a directly physiological effect. If the signal strengths were much increased it is likely that everybody

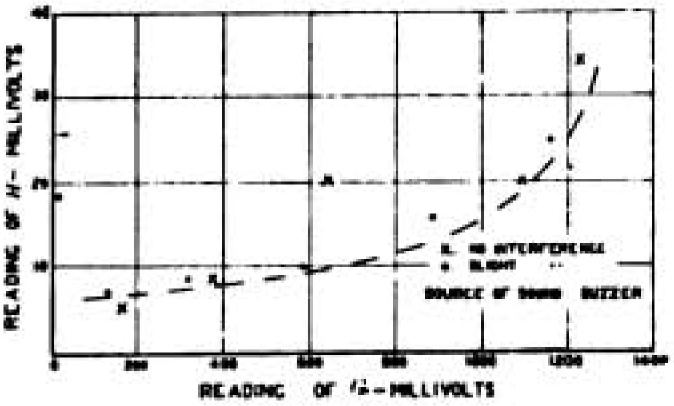

FIG. 8.

would show a similar effect, but the point at which it occurs varies with individuals.

Further tests have since been carried out on people who had had no experience whatever with the reception of audible signals.

At first their results are very irregular, due probably to the strangeness of such a form of measurement, but though the variations of separate readings are large the mean of a considerable number is but little different to that of a trained observer. Sensitivity appears to be innate and it is consistency which improved by practice.

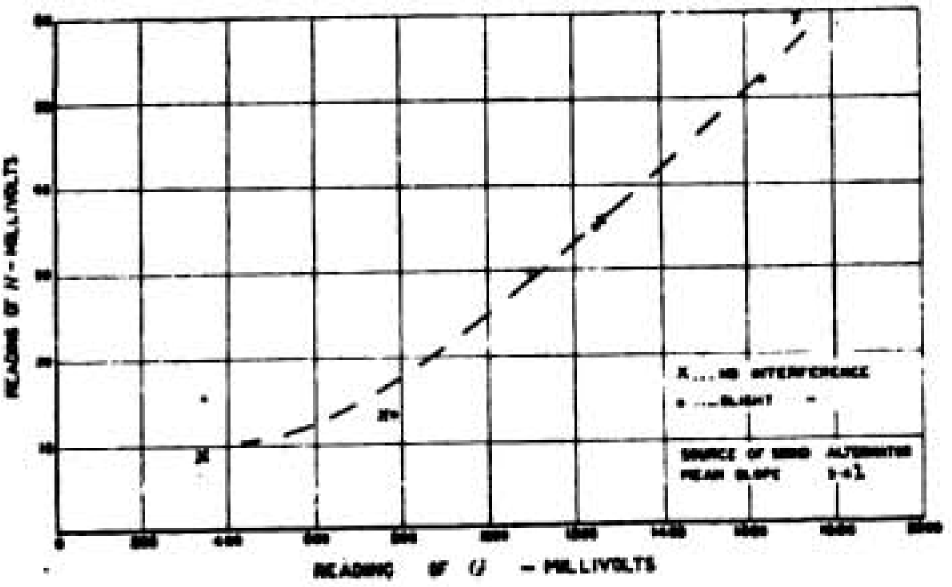

Fig. 9.

After allowing for all these factors the following very interesting results emerge :—

(1) Except at very weak signals (about "R-2") the critical change is a definite percentage of the signal strength. At very low signal strengths the critical change appears to become constant with no interference or to rise if interference is present, but especially in the former case these measurements are extremely difficult to obtain, and the time for which each signal must be listened to is much greater. On very loud signals the percentage appears to increase.

(2) This percentage varies with different observers and with different sources of sound from 2 per cent. to 4 per cent. Captain Robinson gives this as 8 per cent. derived from actual experience. It is very probable that in the air the 2 per cent. to 4 per cent. should be increased, but in the coil sets from which his results are drawn, it is likely that the "pick-ups" in the leads and amplifier were considerable. This of course produces an apparent increase in the percentage value as deduced from coil dimensions.

(3) Above a certain weak signal strength reasonable interference does not affect the sensitivity, and this strength is far below the strength of the interference signal, provided that the quality of the sounds is different. This is a striking and surprising result.

(4) Interference enormously increases the minimum audible signal strength as will be seen by the points on the axis. The strength of

signal given by these points is excessively weak, the presence of the signal was just noticeable but no message could have been read.

(5) When interference is present the critical change at low signal strengths is actually less than the signal strength required to give the minimum audible sound.

It will be noticed that in this experiment the least audible difference is the factor which has been submitted to measurement, whereas in actually measuring directions it is equality of signals which is used. This procedure was adopted intentionally as it was thought that there would probably occur a certain range over which the signals appeared equal, and it would require a great number of " equality " measurements to determine the limits of this range. The " critical change " however marks the limit of this range and so gives definitely the limit of accuracy which can be obtained. That is to say that if the " critical change " is 2 per cent. and an apparent equality of balance is obtained it means that the two signals must actually differ by *less* than 2 per cent. Hence this method gives a definite but conservative measure of the true sensitivity.

These results, though theoretical, have a very direct bearing on the efficiency and working conditions of the R.A.F. system.

Considering first an existing coil of definite dimensions (1) shows that the sensitivity of the set is unaffected by the signal strength within fairly wide limits, since a definite displacement of the set from the zero position of the auxiliary coil produces a definite percentage change in the total E.M.F. in the circuit whether this E.M.F. be large or small. As a result of this provided the amplifier remains unsaturated its actual characteristic is not important. (2) Shows that for signals of fair strength the accuracy is not affected by constant interference noises such as valve noises or commutation hum from a neighbouring supply system. Directive interference is of course as serious as in all systems.

Returning now to the converse problem, that of design, these results will be of great assistance in the determination of the area-turns of the two coils. Since (1) shows that the exact signal strength is not of importance, it is well, when possible, to design the main coil so as to give a signal of fair strength on the weakest station on which measurements are required to be made. In many cases it is desirable to provide about 50 per cent. more turns which can be brought into action by a switch in order to enable measurements to be carried out if necessary under unfavourable circumstances, but these extra turns when not in use should be completely isolated from the coils to avoid vertical effect from the over-hanging turns.

Having fixed the main coil the area-turns on the auxiliary coil can now be determined by use of the percentage value obtained in (2).

In choosing the exact figure the designer will of course have to use his discretion.

This comprises the outline of the method of design for coils working on this system. The question of the exact size and shape of coil and of size of wire will not be dealt with here further; it is one which has been considerably discussed in America especially by Blatterman in the paper referred to above.

As in all designs considerable latitude has to be left to the discretion and experience of the designer, what is required is not a series of figures to enable an inexperienced person to produce some sort of a result; but a discussion of the various vital points and their relative importance. One interesting fact may be noted here. The coil frame referred to in the paper was constructed before this system was organised. Working backwards however from the actual measured sensitivity of the set and the known value of the area-turns it gives a figure for the critical change of 3 per cent., which is well in agreement with the figures obtained from the theoretical considerations.

The foregoing description and discussion covers all that has been experimentally investigated up to the present.

On the one hand it is incomplete in many particulars; the problems of continuous waves and of short wave work will no doubt bring in many special difficulties of their own.

On the other hand some points may seem to have been dealt with in unnecessary detail. The aim underlying the whole investigation has been to reduce the problem as far as possible to one of systematic design. Sets may, and have, no doubt been built which have given satisfactory results but in which many of the smaller points have been disregarded. It may be taken that for a sensitivity of 1° or over very few precautions either in design or operation need be taken. From 1° to $\frac{1}{2}$° more care is required, but below $\frac{1}{2}$° the possible errors multiply very rapidly. With skill and practice in operation many of these can be reduced or eliminated; but a system can hardly be regarded as satisfactory unless the calls on the operator's skill have been reduced to the minimum. This can only be done by close investigation, and by the incorporation of the protective measures in the design to the greatest possible extent, so as to open the power of accurate measurement even to those whose skill and experience in the particular type of work involved are less.

Measurement of the Signals Received in Washington from the Lafayette Station.*

By Dr. L. W. AUSTIN

(U.S. Naval Research Laboratory).

The sending tests of the Lafayette Station during August and early September, 1920, have given an opportunity for a further trial of the radio transmission formula at a wavelength much greater than has been hitherto investigated.

The method of reception was essentially that described in the measurements on Nauen † except that the measurement telephones are now placed

---

* Received January 26th, 1921.

† Quantitative Measurements at Washington on the Signals from the German Radio Stations at Nauen and Eilvese. *Journal of the Franklin Institute*, 182, pp. 605—611, November, 1916.

in series with the plate battery of the oscillating vacuum tube. The shunting resistance is of a type devised by G. W. Pickard which throws impedance into the line as the telephone is shunted, so as to keep the total impedance nearly constant. The receiving set is calibrated in essentially the same manner as has been already described[*] except that now a shunted galvanometer and detector[†] are placed directly in the artificial antenna circuit for the measurement of the calibrating antenna current instead of being coupled as formerly. As an additional check on the calibration, audibilities were taken on signals from Arlington using a few milliamperes in the antenna. At this distance, a little more than a wavelength away from the laboratory, no errors due to direct action on the secondary of the receiving set, or of absorption, can enter into the calculation of the field at the receiving station. The two methods of calibration were in complete agreement.

Full descriptions of the Lafayette Station have appeared in a number of the scientific journals.[‡] The effective height of the antenna has not been announced but it may be safely assumed to be approximately seven-tenths of the height of the masts, or one hundred and seventy metres.

The observations on the audibility of the received signals are shown in Table I., while the necessary data for calculation and the calculated values of received current and audibility are given below. For comparison, the average audibilities of Nauen and Lyons, taken between 9 and 10 a.m. on the same days, are included. It is seen that the agreement between observed and calculated values is satisfactory, as of course the formula only claims to represent average results of observations extending over long periods of time.

Table I.

Lafayette received in Washington.

Date.	Observed Audibility.	
	8 a.m	12 noon.
Aug. 25	3,000	1,500
,, 26	3,000	2,000
,, 27	2,000	1,500
,, 28	3,000	1,500
,, 29	1,500	1,000
,, 30	2,000	800
,, 31	800	800
Sept. 1	1,000	600
,, 2	2,000	1,500
,, 3	—	3,000
Average audibility . .	1,700	

---

[*] *Proceedings of the Institute of Radio Engineers*, 5, p. 239, 1917.

[†] *Proceedings of the Institute of Radio Engineers*, 7, p. 257, 1919.

[‡] See pp. 85—93 of the February issue.

Data for Calculation.

$$\text{Received current } I_r = 377 \frac{I_s h_1 h_2}{\lambda d R} \epsilon^{-0\cdot0015d/\sqrt{\lambda}} \text{ amp.}$$

Data for Lafayette:—

Sending current $I_s = 475$ amps.
Receiving height $h_2 = 0{\cdot}0164$ km.
Distance $d = 6{,}160$ km.
$\epsilon^{-0\cdot0015d/\sqrt{\lambda}} = 0{\cdot}148$.
Power for unit audibility $= 1{\cdot}5 \times 10^{-15}$

Sending height $h_1 = 0{\cdot}170$ km.
Wavelength $\lambda = 23{\cdot}4$ km.
Receiving resistance $R = 135$ ohms.
E_0 = Field intensity, volts per metre.
Audibility proportional to $\sqrt{\text{Power}}$.

Data for Nauen:—

$I_s = 320$ amps.* $h_1 = 0{\cdot}150$ km.† $\lambda = 12{\cdot}5$ km.
$R = 83$ ohms. $d = 6{,}650$ km. $\epsilon^{-0\cdot0015d/\sqrt{\lambda}} = 0{\cdot}059$.

Data for Lyons:—

$I_s = 250$ amps.* $h_1 = 0{\cdot}120$ km.† $\lambda = 15{\cdot}0$ k.
$R = 90$ ohms. $d = 6{,}460$ km. $\epsilon^{-0\cdot0015d/\sqrt{\lambda}} = 0{\cdot}081$.

TABLE II.

	Lafayette		Nauen.		Lyons.	
	Calculated.	Observed.	Calculated.	Observed.	Calculated.	Observed.
Audibility ...	1,130	1,700	600	467	420	167
I_r amps ...	$3{\cdot}79.10^{-6}$	$5{\cdot}7.10^{-6}$	$2{\cdot}54.10^{-6}$	$1{\cdot}98.10^{-6}$	$1{\cdot}72.10^{-6}$	$6{\cdot}85.10^{-7}$
E_0 volts/metre	$3{\cdot}11.10^{-5}$	$4{\cdot}67.10^{-5}$	$1{\cdot}29.10^{-5}$	$1{\cdot}01.10^{-5}$	$9{\cdot}45.10^{-6}$	$3{\cdot}75.10^{-6}$

A Use for the Valve in Wireless Measurements.‡

By H. J. ROUND.

A method of signal measurement has been in use in the Marconi Company during the last ten years which has recently been extended and developed for other purposes than that of pure signal measurement.

The original method is shown in Fig. 1. J is the oscillatory circuit, in which the strength of signals is to be measured. A Fleming valve F, the filament current of which is supplied by the battery B_1, is placed in series with the potentiometer device P B_2 and the telephone attachment T C across the condenser of the circuit J.

If extremely weak signals are now induced into J such that they are just

---

* Reported.
† Estimated.
‡ Received in final form, January 29th, 1921.

audible at one point only on the potentiometer P B_2, this position of the potentiometer can be called the zero point. The voltmeter reading is taken when this zero point is reached and is found to be, say, V_0. The normal signals to be measured are then produced and the slider of the potentiometer moved towards the negative end of the battery B_2 until signals again just vanish.

A second reading V_1 of the voltmeter is now taken and the value $V_1 - V_0$ gives the maximum voltage of the signal; $V_1 - V_0$ being known as the "slide-back" voltage.

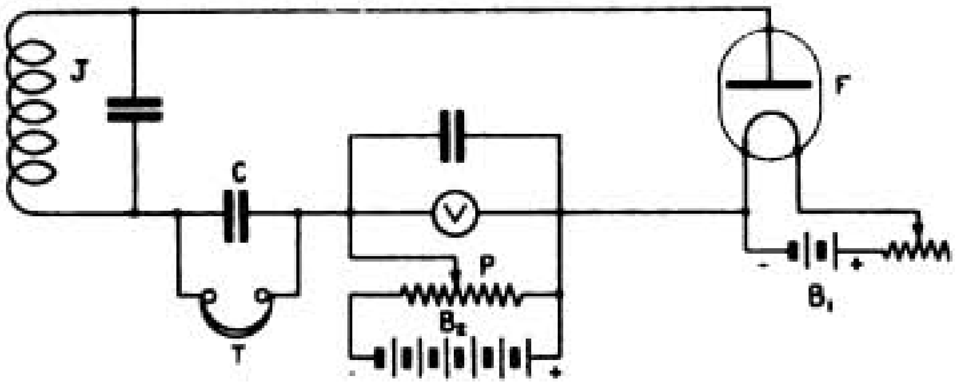

FIG. 1.

Fig. 2 represents a rectifying characteristic of a Fleming valve. A represents a weak signal for determining the zero and B represents a stronger signal, the slide-back voltage having been adjusted so that there is only a trace of rectification, namely when the wave train is at its maximum amplitude. The voltage $V_1 - V_0$ is indicated by the distance x and is obviously approximately equal to the maximum voltage of the signal.

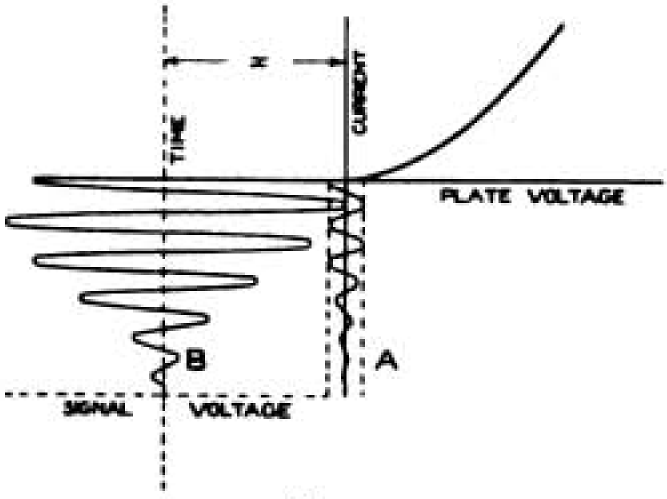

FIG. 2.

A series of graphs taken in 1911, between oscillatory current in J and the slide-back voltage gave straight lines through the origin up to values of voltage of 50, beyond which they were not taken. These original measurements, when the device was first adopted, were taken on spark stations and exactly what one was measuring, if spark frequency and damping varied, was difficult to say, but for the measurement of attenuation with increase of distance between the receiver and a source of signals of uniform strength—such as a high power Spark Station working on programmes—the method was simple in operation and gave consistent results.

With continuous waves the case is altered and the peak voltage corresponding to $V_1 - V_0$ may be taken as a measure of the R.M.S. voltage of the received signals. There is an element of doubt owing to the introduction of the small damping of the Fleming valve when used at a point at which telephone signals were just audible and this difficulty has been surmounted by the use of the three-electrode valve with a modified circuit.

This modification is particularly adaptable for measurements in circuits of very low damping, and the usual arrangement is shown in Fig. 3. The Fleming valve is replaced by the three-electrode valve D, the signals in the circuit J being applied to the grid in series with which is a considerable negative E.M.F. so that during the operation no grid current whatever can flow. The presence of any grid current is indicated by the galvanometer G_1. A second galvanometer G_2 is placed in the anode circuit in series with which is a battery B_3 which must be of sufficient voltage to enable plenty of indication of current in G_2 when no grid current is flowing in G_1.

On sliding the potentiometer P towards the negative end a point can be found such that the galvanometer G_2 indicates a condition of zero anode current. The potential difference between the potentiometer slider, when in this position, and any other arbitrary point of fixed potential, may be taken as a measure of the voltage V_0.

Now on applying signals to J in the form of spark or continuous wave, a further negative slide-back will be required in order to reduce the anode current to zero again and the new voltage, V_1, of the potentiometer slider, measured as before, will now be greater than V_0 by the amount of the peak voltage of the alternating E.M.F. induced in J by the signal.

A fairly close mesh valve with the mesh well enclosing the filament tends to give definite zeros, but a Marconi V-24 or a French valve, if chosen so that the filament is not sticking out at the ends of the grid too much, is quite good. With these two latter valves, the two galvanometers can be Weston Model 375 or Paul Unipivot 5-ohm type. One galvanometer only need be used with a switch which enables it to be inserted occasionally in the grid circuit to make sure that no current is flowing.

The potentiometer battery can be about 25 volts and B_3 up to 20 volts.

Since the method only involves readings taken when no anode current is flowing, the possibility of reaction effects being introduced by the valve may be neglected.

With unearthed circuits of small capacity, care has to be taken that the

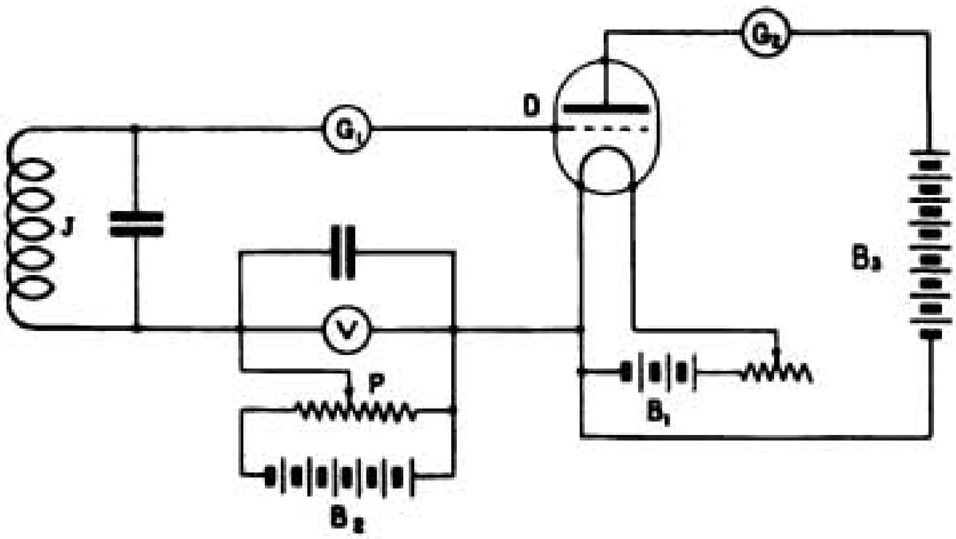

FIG. 3.

battery system is not influencing the readings, and in circuits with a considerable amount of distributed capacity, the effect of this must be taken into account.

Referring to Fig. 3, if J is an oscillatory circuit such as an aerial—the valve being tapped off some part of the inductance of the circuit and not necessarily all—its resistance can be determined immediately if a constant source of oscillations is obtainable. Such a source may be obtained from one or two French type valves with a 200 volt supply from the mains or from large dry cells the whole arranged to give oscillations of the desired frequency.

To measure the resistance of J it is necessary to induce into J from the oscillator, with J tuned up, and measure the slide-back voltage, subtracting the zero voltage reading which was obtained with the oscillator not working. Then insert two or three values of non-inductive resistance r into J and measure the slide-back volts again. As net slide-back is proportional to current, and as the induced E.M.F. is constant, a simple calculation gives the value of R, the resistance of J. The values given when using different resistances should correspond.

When this substitution method is being used with a hot wire instrument, some difficulty is always experienced in tuning up to get maximum readings, but with this null method, it is easily seen that it is merely necessary to go through the point of tune watching for any slight kick of the galvanometer G_2. When measuring a swaying aerial of very low damping, this point is of considerable importance.

Instead of reading the value of $V_1 - V_0$ with a galvanometer G_2, a telephone with a make and break on the anode circuit can be used, or a telephone and a very weak separate heterodyne. The latter has turned out to be a very useful modification when measuring the resistances of large aerials where the current values induced by stations such as Eiffel Tower are sufficient to give big slide-back voltages. The use of the heterodyne makes it possible to concentrate only on one's own induced current from the oscillator, and also to watch whether the oscillator is too tightly coupled to J in which latter case a perceptible change of heterodyne note occurs as J is passing through the resonance value of the oscillator, and this should be avoided. The heterodyne method is also preferable in measurement of signal strength from other stations but the heterodyne should be so loosely coupled as to have a negligible value of $V_1 - V_0$ and in this case the normal large ratio of heterodyne current to signal is reversed, a condition unsuitable for weak signal measurement.

Coupling should be made from the oscillator, by means of a few turns in the oscillatory circuit next to the batteries (*i.e.*, the low potential end) brought near to the circuit being measured, the remainder of the oscillator circuit being a few feet away (see Fig. 4).

The apparatus used is simple and with the possible exception of the voltmeter, is all ordinary receiving circuit equipment. It may also be mentioned that only about a fifth the power is necessary that would be required to operate a thermo-ammeter.

Without the introduction of amplifiers, this slide-back method is not of much use for the measurement of modern signals as the latter are of such small voltages unless amplified and then the measurement of the law of the amplifier introduces considerable possibilities of errors.

The same slide-back method can be used for determining the voltage across various pieces of apparatus without disturbing the apparatus unless the capacity of the latter is of too small an order. For instance, the voltage magnification steps can be measured on a high frequency or low frequency amplifier or telephone voltages can be read across resistances or inductances on telephone lines—or of course, actual aerial currents in a receiver can be measured.

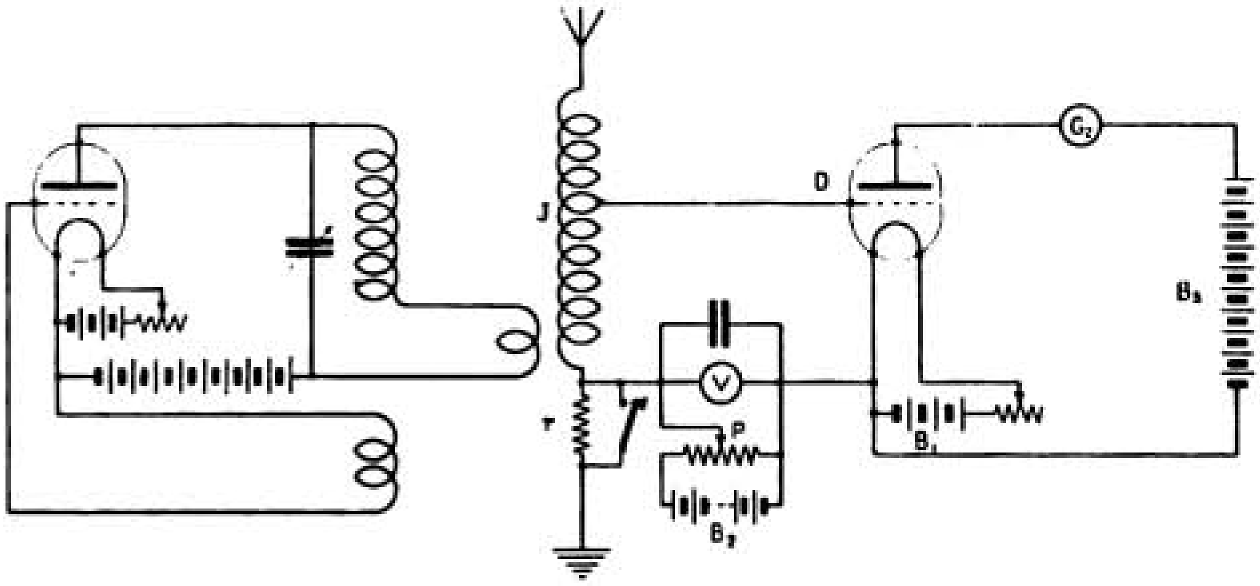

FIG. 4.

The above method suggested that the valve can be used for other measurement purposes, for instance if high voltages have to be read, a null method using a valve with a high "μ" value can be used (where $\mu = -\frac{\partial e_p}{\partial e_g}$ with a constant value of plate current). The valve can be operated with its filament so dull that the saturation current is just sufficient to give a distinct indication on G_2 (see Fig. 3). The amount of slide-back on P multiplied by the value of μ is the voltage V.

The various ways of obtaining the value of μ have been so thoroughly described that it is not necessary to go into them here.

The Manufacture of Radio Apparatus in France.

We have received from the Société Française Radio-Électrique some interesting photographs and particulars of the works maintained by that company in conjunction with the Compagnie Générale de Télégraphie sans Fil and the Compagnie d'Exploitation Radio-Électrique. These three companies are now associated with one another to specialise both in the construction and operation of radio installations.

Fig. 1.—Front View of the Machine Shop, Offices, etc., of the Levallois Works.

The works at Levallois of which we published an illustration in the March issue of the Radio Review (p. 132) cover an area of 12,000 square metres and are devoted to the manufacture of all kinds of radio apparatus with the exception of the largest machines. Experimental research is also conducted at these works. Another view of the front of the offices and workshops is shown in Fig. 1 in which illustration one of the antenna supporting towers may also be seen. A permanent radio station is fitted

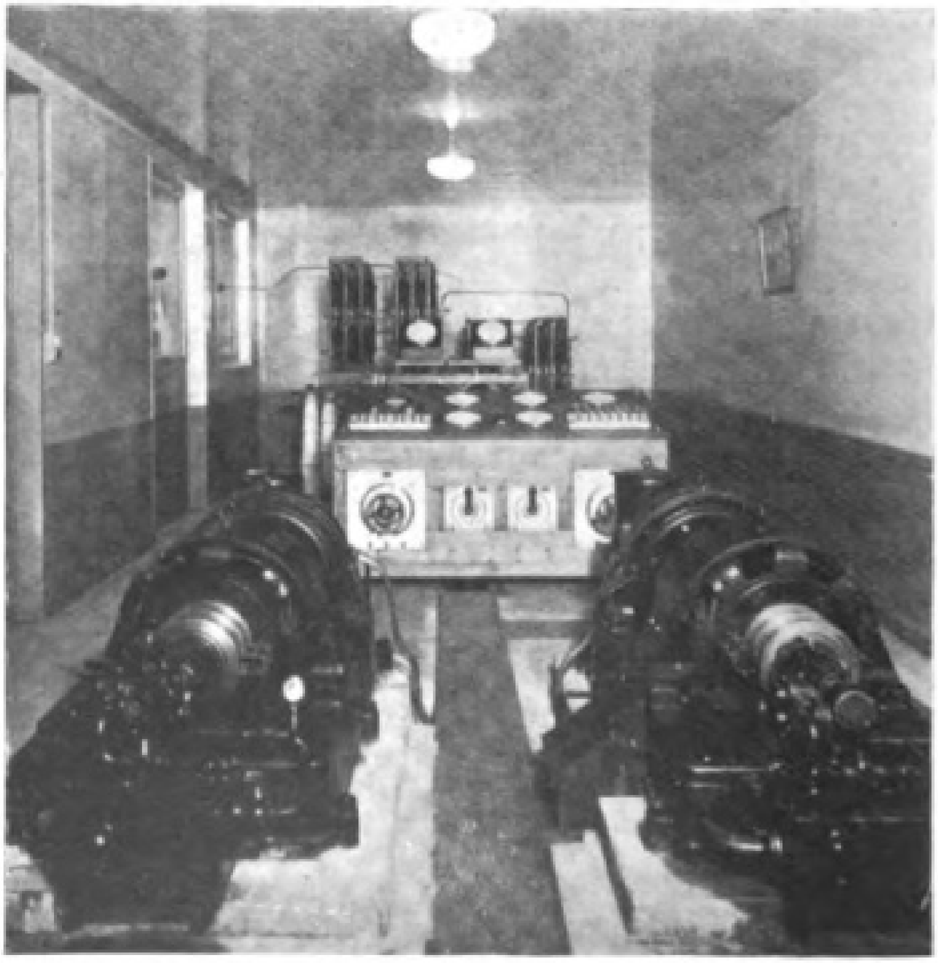

Fig. 2.—50-kW Transmitting Installation at the Levallois Works.

FIG. 3.—Drawing Office—Levallois Works.

up in these works capable of an output of about 50 kW in the antenna using either of two sources of energy—H.F. alternators or valves. Fig. 2 illustrates this installation and shows the two H.F. alternators each of 25 kW output. These may be operated in parallel with high speed transmission.

The works themselves consist of three bays comprising the machine shops, despatching room, test rooms, experimental reception rooms, laboratories, offices, drawing offices, stores, etc. Some of these departments are illustrated in Figs. 3, 4, 5 and 6.

FIG. 4.—Machine Shop—Levallois Works.

Fig. 5.—Finished Parts Stores—Levallois Works.

The works at Lyon-Venissieux cover an area of 27,000 square metres and are devoted entirely to the manufacture of antenna towers. An exterior

Fig. 6.—Miscellaneous Stores—Levallois Works.

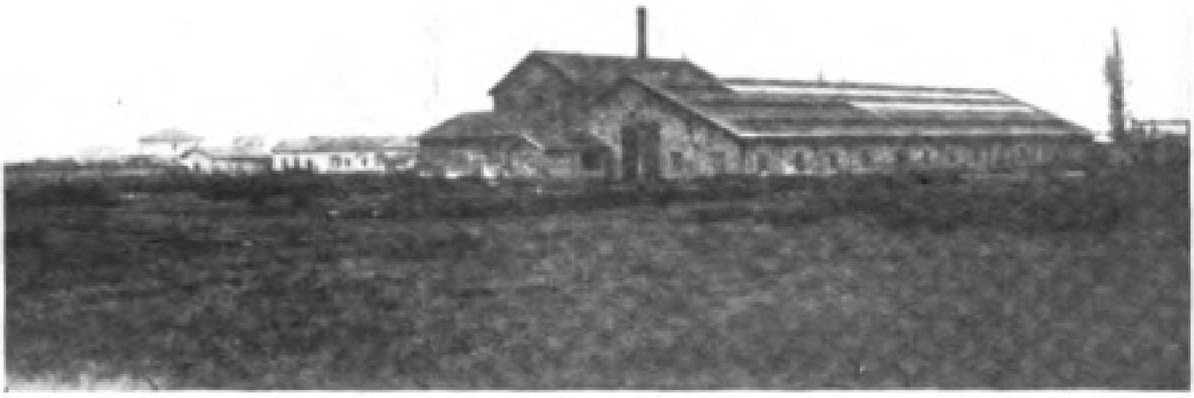

FIG. 7.—General View of the Venissieux Works, showing Aerial of Experimental Stations.

view of these works is shown in Fig. 7, together with the supporting tower for the umbrella aerial which is used for experimental work. This tower is 100 metres high and the antenna can be excited by a 25 kW H.F. alter-

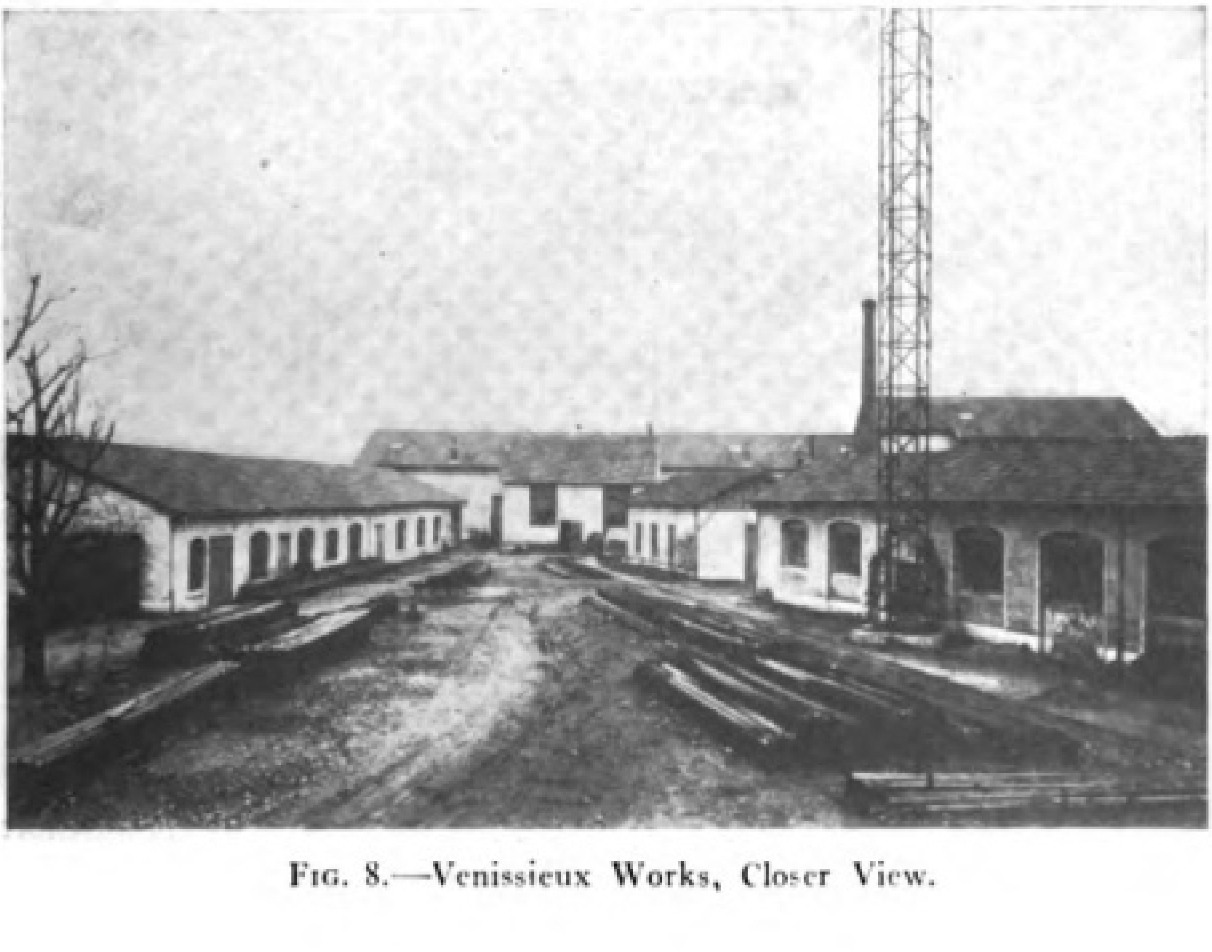

FIG. 8.—Venissieux Works, Closer View.

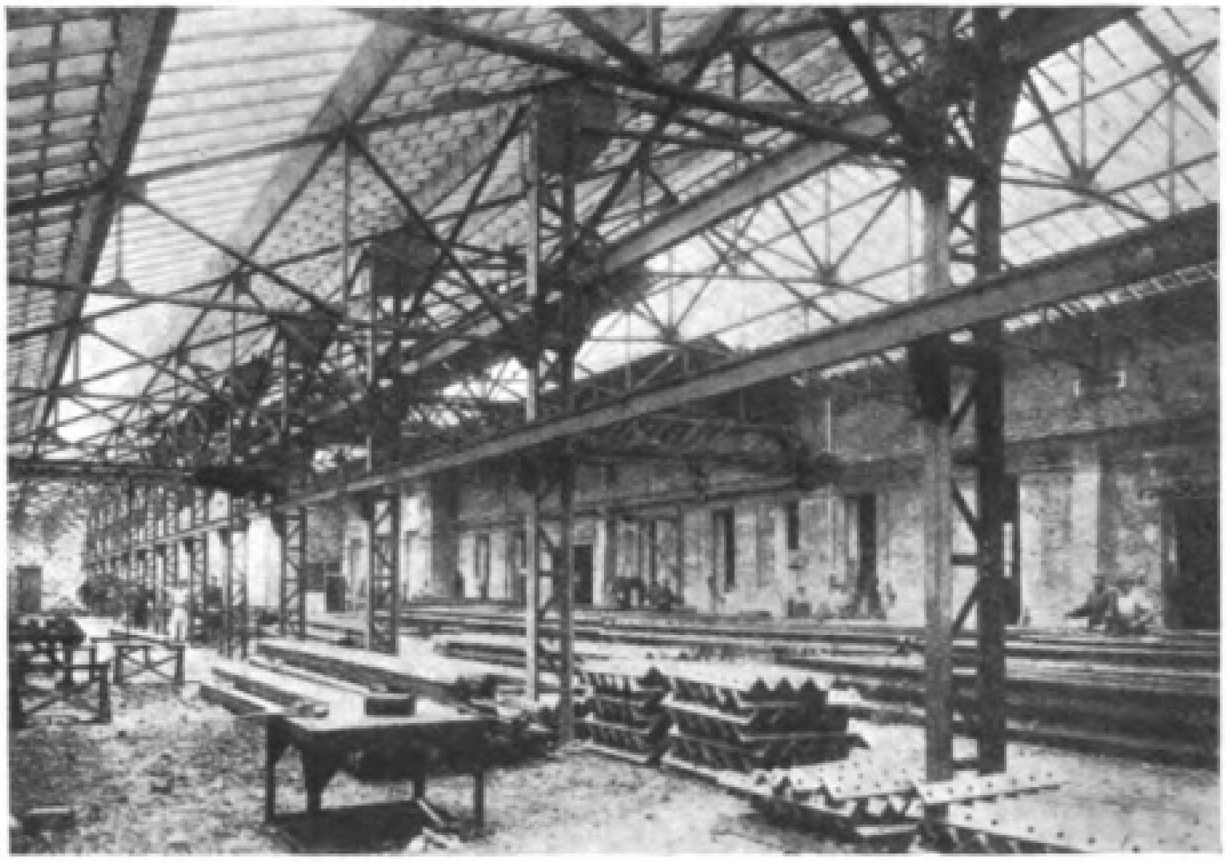

FIG. 9.—Mast Assembly Shop—Venissieux Works.

nator or by a valve transmitter. Fig. 8 is a closer view of the buildin and Fig. 9 shows the assembling shop in these works.

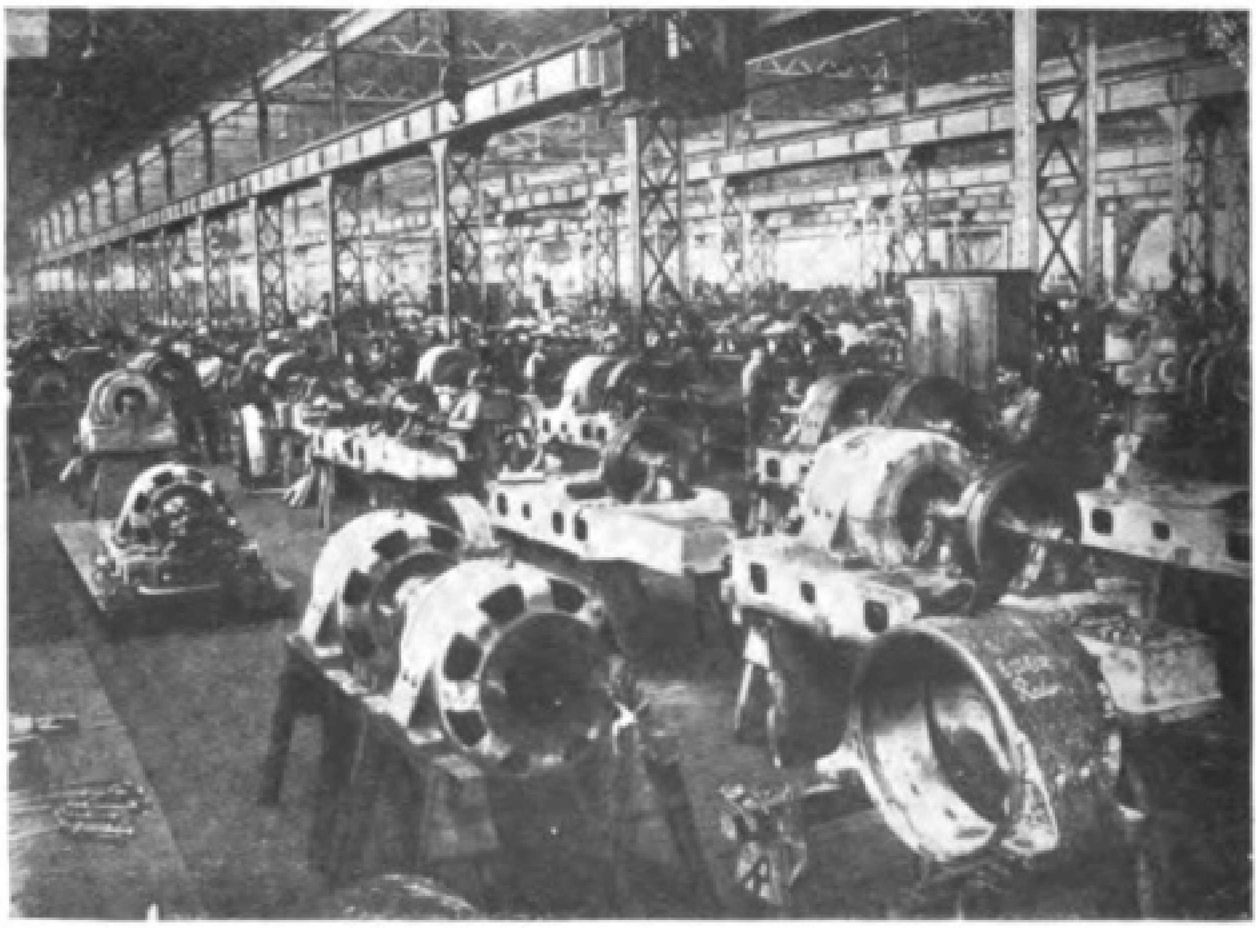

FIG. 10.—Assembly Shop for Medium Power H.F. Alternators—Belfort Works.

The H.F. alternators and large electrical machinery are manufactured in the Belfort Works of the Société Alsacienne de Constructions Mécaniques which firm is associated with the Société Française Radio-Électrique. A group of H.F. alternators under construction in these works was illustrated on p. 129 of the March issue of the RADIO REVIEW. The assembly shop for medium power H.F. alternators may be seen in Fig. 10. These works have for many years been engaged in the construction of both electrical and mechanical machinery of all sizes such as turbines, turbo-dynamos, locomotives, etc., and certain sections of the works are now devoted entirely to the construction of the machines for the Société Française Radio-Électrique.

Triode Oscillation Generators with Coupled Oscillatory Circuits.*

By F. HARMS.

A well-known phenomenon when tuning an antenna to an oscillatory circuit maintained by a triode is the sudden jump which occurs in both the current and the frequency as the inductance or capacity of the aerial circuit passes through a certain value. On passing back to the previous condition the jump occurs for a different value of the adjustable inductance or capacity. In Fig. 1 the antenna current is plotted against the capacity of the secondary or aerial circuit in a certain case. On increasing C_2 the current follows the curve 123456, whereas on decreasing C_2 it follows 653721.

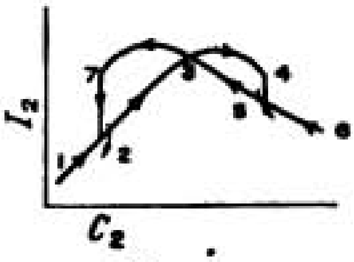

FIG. 1.

I. Production of Oscillations by Means of a Triode.

Before considering the case of the two coupled oscillatory circuits, we shall consider the simple triode circuit shown in Fig. 2. We have the following equations:—

$$i_a = Sv_g + \frac{1}{R_i} v_a + c \quad . \quad . \quad . \quad . \quad . \quad . \quad . \quad . \quad (1)$$

where $$S = \left(\frac{\partial i_a}{\partial v_g}\right)_{v_a \,=\, \text{constant}}$$

and $$R_i = \left(\frac{\partial v_a}{\partial i_a}\right)_{v_g \,=\, \text{constant}}$$

in other words S is the slope of the characteristic, and R_i is the internal resistance of the triode.

---

* Abstracted from the *Jahrbuch Zeitschrift für drahtlose Telegraphie*—see Abstract No. 1927 in this issue for references.

$$R_1 i_L + L_1\frac{di_L}{dt} = \frac{1}{C_1}\int i_C dt = v \quad \ldots\ldots\ldots \quad (2)$$

where v is the voltage across the condenser

$$i_a = i_L + i_C \quad \ldots\ldots\ldots\ldots \quad (3)$$

$$v_a = E_a - \left(R_1 i_L + L_1\frac{di_L}{dt}\right) = E_a - v \quad \ldots\ldots \quad (4)$$

where v_a is the anode voltage.

$$v_g = E_g - M\frac{di_L}{dt} \quad \ldots\ldots\ldots\ldots \quad (5)$$

where v_g is the grid voltage, the grid current being assumed so small that the effect of L_g is negligible.

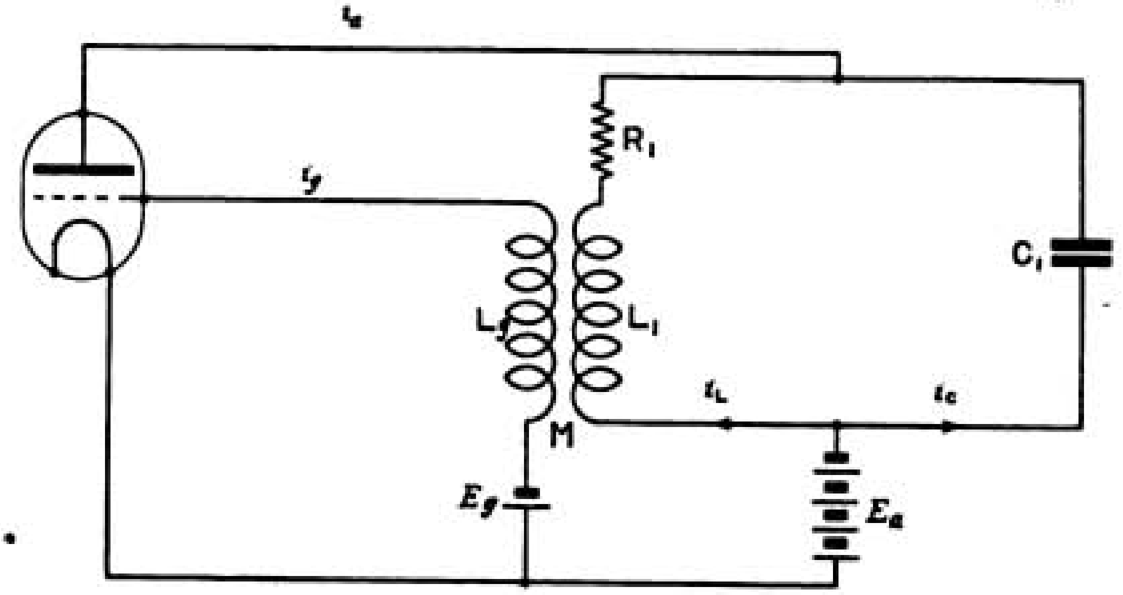

FIG. 2.

When the circuit is not oscillating we have the steady condition represented by the formula

$$I_a = SE_g + \frac{1}{R_i}(E_a - R_1 I_a) + c \quad \ldots\ldots\ldots \quad (1a)$$

By elimination from these six equations we get

$$\alpha\frac{d^2v}{dt^2} + \beta\frac{dv}{dt} + \gamma v = \epsilon \quad \ldots\ldots\ldots \quad (6)$$

where $\alpha = C_1 L_1 \qquad \beta = C_1 R_1 + SM + \frac{L_1}{R_i} \quad \ldots\ldots \quad (7)$

$$\gamma = 1 + \frac{R_1}{R_i} \qquad \epsilon = I_a R_1\left(1 + \frac{R_1}{R_i}\right) \quad \ldots\ldots\ldots \quad (8)$$

On comparing this equation with that for the ordinary oscillatory circuit it will be seen that to get zero damping, that is, a sustained oscillation, β must vanish, and therefore

$$-SM = C_1 R_1 + \frac{L_1}{R_i} \quad \ldots\ldots\ldots\ldots \quad (9)$$

For the oscillation to build up, SM must have a larger value than this, that is to say, omitting the negative sign

$$SM > C_1R_1 + \frac{L_1}{R_i} \quad . \; . \; . \; . \; . \; . \; . \; . \; . \; . \quad (9a)$$

From (7) and (8), the frequency of the sustained oscillations is seen to be

$$f = \frac{1}{2\pi}\sqrt{\frac{1 + R_1/R_i}{C_1L_1}}$$

in which R_1/R_i is practically negligible.

II. Maximum Amplitude of the Oscillation.

As the oscillation builds up the anode current passes beyond the knee of the characteristic and the slope of the curve is variable; as an approximation one may assume that the curve is replaced by a straight line through the end points as in Fig. 3. The equivalent steepness will then be*

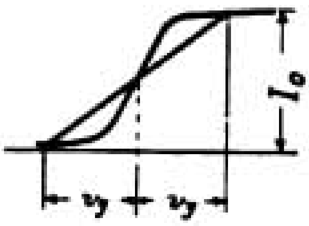

FIG. 3.

$$S = \frac{I_0}{2v_g} \quad . \; . \; . \; . \; . \; . \; . \quad (10)$$

and

$$v_g = \frac{I_0}{2} \cdot \frac{1}{S} \quad . \; . \; . \; . \; . \; . \; . \quad (11)$$

Substituting for S from equation (9) we have

$$v_g = \frac{I_0}{2} \frac{M}{C_1R_1 + L_1/R_i} \quad . \; . \; . \; . \; . \; . \; . \; . \quad (11a)$$

From equation (5) we have for the amplitude of the steady oscillation of grid potential

$$\hat{v}_g = \omega M \hat{i}_L \quad . \; . \; . \; . \; . \; . \; . \; . \; . \; . \; . \; . \quad (12)$$

[*Note.*—The sign ∧ represents maximum or crest values.]

From equations (11a) and (12)

$$\hat{i}_L = \frac{I_0}{2\omega} \cdot \frac{1}{C_1R_1 + L_1/R_i} \quad . \; . \; . \; . \; . \; . \; . \; . \; . \quad (13)$$

It must be remembered that the denominator must not exceed a certain value (equation (9)) or oscillations become impossible. In consequence of this, on varying the constants of the circuit, the oscillations do not start up with gradually increasing amplitude, but suddenly with a considerable amplitude.

It follows from (13) that the amplitude is a maximum when

$$\frac{L_1}{C_1R_1} = R_i \quad . \; . \; . \; . \; . \; . \; . \; . \; . \; . \; . \; . \quad (14)$$

---

* Rukop has pointed out (*Jahrbuch*, March, 1921, p. 218) that equation (10) is incorrect owing to neglect of the variable anode voltage. This modifies several of the following equations and conclusions.

III. Forced Oscillations in Two Coupled Circuits.

If a periodic E.M.F. $e.\epsilon^{j\omega t}$ act on the first circuit (Fig. 4) the differential equations for the currents in the two circuits are

$$\left.\begin{aligned} L_1\frac{d^2i_1}{dt^2} + R_1\frac{di_1}{dt} + \frac{1}{C_1}i_1 + M\frac{d^2i_2}{dt^2} &= j\omega e\,.\,\epsilon^{j\omega t} \\ L_2\frac{d^2i_2}{dt^2} + R_2\frac{di_2}{dt} + \frac{1}{C_2}i_2 + M\frac{d^2i_1}{dt^2} &= 0 \end{aligned}\right\} \quad . \; . \; (15)$$

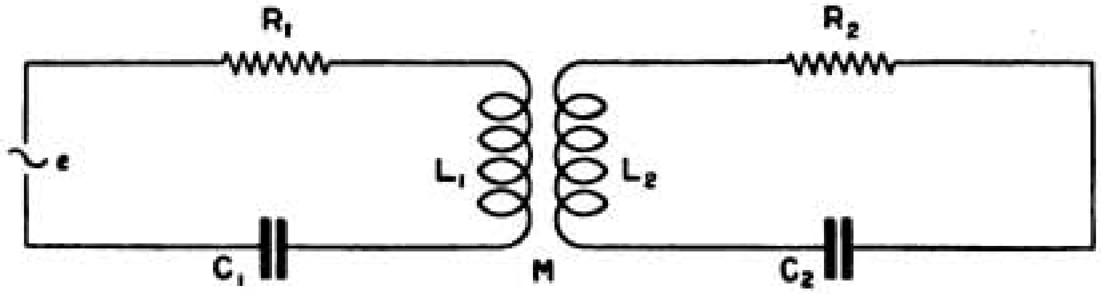

FIG. 4.

If a stationary condition is possible it will be given by

$$i_1 = A_1\epsilon^{j\omega t} \text{ and } i_2 = A_2\epsilon^{j\omega t} \quad . \; . \; . \; . \; . \; . \; . \; . \; (16)$$

Substituting these in equations (15) we obtain

$$\left.\begin{aligned} -L_1A_1\omega^2 + R_1A_1j\omega + \frac{1}{C_1}A_1 - MA_2\omega^2 &= ej\omega \\ -L_2A_2\omega^2 + R_2A_2j\omega + \frac{1}{C_2}A_2 - MA_1\omega^2 &= 0 \end{aligned}\right\} \quad . \; . \; (17)$$

Introducing now an equivalent resistance R and an equivalent inductance L, such that

$$R = R_1 + \omega^2M^2\frac{R_2}{Z_2^2} \text{ and } L = L_1 - \omega^2M^2\frac{L_2 - \frac{1}{\omega^2C_2}}{Z_2^2} \quad . \; . \; . \; (18)$$

where $$Z_2^2 = R_2^2 + \left(\omega L_2 - \frac{1}{\omega C_2}\right)^2$$

the equation for the first circuit is seen to be the same as if the second circuit were absent except that it has these equivalent values of L and R which, however, depend on the frequency. It is thus found that

$$\left.\begin{aligned} \hat{i}_1 &= \frac{\hat{e}}{\sqrt{R^2 + \omega^2\left(L - \frac{1}{\omega^2C_1}\right)^2}} \\ \hat{i}_2 &= \hat{i}_1\frac{\omega M}{Z_2} \end{aligned}\right\} \quad . \; . \; . \; . \; . \; . \; (19)$$

We have seen that the frequency of a transmitting valve set is approximately the undamped frequency of the circuit. Putting $R_1 = R_2 = 0$ and $e = 0$ in (15) we have the well-known equation

$$\omega^4(1 - k^2) - \omega^2(\omega_{10}{}^2 + \omega_{20}{}^2) + \omega_{10}{}^2\omega_{20}{}^2 = 0 \quad . \quad . \quad . \quad . \quad (20)$$

the solution of which gives the two possible frequencies,

$$\omega^2 = \frac{\omega_{10}{}^2 + \omega_{20}{}^2}{2(1 - k^2)} \pm \sqrt{-\frac{\omega_{10}{}^2\,\omega_{20}{}^2}{1 - k^2} + \left(\frac{\omega_{10}{}^2 + \omega_{20}{}^2}{2(1 - k^2)}\right)^2} \quad . \quad . \quad (21)$$

The values of the two coupled frequencies calculated by this equation for a particular example are plotted in Fig. 5 for various values of C_2. They lie outside the natural frequencies of the two circuits, and except for very loose coupling, differ considerably from them.

IV. The Conditions for the Oscillation of Coupled Valve Circuits and the Current in the Secondary Circuit.

Except that the equivalent values L and R have to be substituted for L_1 and R_1, the equations already established and especially (9) and (13) are unaltered. Since, however, L and R depend on the frequency, different values will be obtained for them and for the conditions for the setting up of oscillations and for the amplitude of the current, depending on which of the two coupled frequencies ω' and ω'' be employed. We thus obtain the following equations which enable us to explain all the discontinuous phenomena of valve oscillators with magnetic coupling.

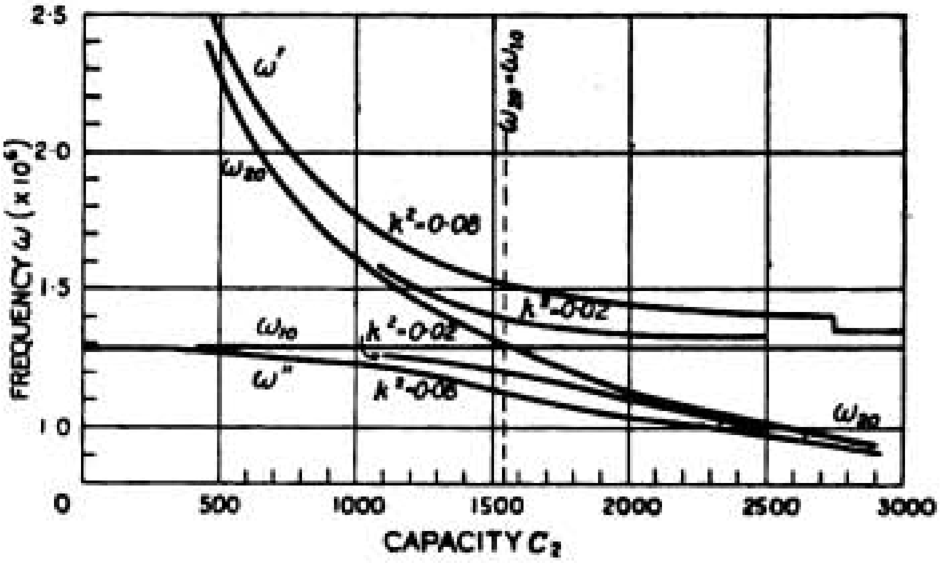

FIG. 5.

For the oscillation of frequency $\omega'/2\pi$

$$SM > \frac{L'}{R_i} + C_1R'$$

$$i_L = \frac{I_0}{2\omega'} \cdot \frac{1}{\dfrac{L'}{R_i} + C_1R'}$$

For the oscillation of frequency $\omega''/2\pi$ . . . . (22)

$$SM > \frac{L''}{R_i} + C_1R''$$

$$i_L = \frac{I_0}{2\omega''} \cdot \frac{1}{\dfrac{L''}{R_i} + C_1R''}$$

From these equations and (19) we have

$$\left.\begin{aligned} i_2' &= \frac{I_0}{2} \cdot \frac{M}{\frac{L'}{R_i} + C_1R'} \cdot \frac{1}{Z_2} \\ &= \frac{I_0}{2} \cdot \sqrt{L_1L_2} \cdot \frac{k}{Z_2\left(\frac{L'}{R_i} + C_1R'\right)} \\ \text{and} \qquad i_2'' &= \frac{I_0}{2} \sqrt{L_1L_2} \frac{k}{Z_2\left(\frac{L''}{R_i} + C_1R''\right)} \end{aligned}\right\} \quad \ldots\ldots (23)$$

In these equations R' and L' are the values of R and L for the coupled frequency ω', and R'' and L'' those for the coupled frequency ω''.

V. A Numerical Example.

We assume a triode with $S = 10^{-4}$, $R_i = 10^5$ and therefore a voltage ratio of 10; we take the mutual inductance M between the anode and grid circuits to be 2 . 10^5 cm. We calculate for the range $C_2 = 1{,}000$ to 2,500 cm the values of ω'^2 and ω''^2 from equation (21) and the corresponding values of Z_2, L and R. We then calculate the values of A, where

$$A = \frac{L}{R_i} + C_1R \quad \ldots\ldots\ldots (24)$$

and of

$$\frac{k}{ZA} \quad \ldots\ldots\ldots (25)$$

which is proportional to the amplitude of the secondary current.

The so calculated values are given in Tables I. and II. on the assumption that

$L_1 = 4 \,.\, 10^5$ cm. $\quad C_1 = 1{,}360$ cm. $\quad R_1 = 1$ ohm.
$L_2 = 3{\cdot}5 \,.\, 10^5$ cm. $\quad R_2 = 7{\cdot}3$ ohm.

In the first table $k^2 = 0{\cdot}08$ and in the second $k^2 = 0{\cdot}02$, the change being effected by moving the coils relatively to one another without varying their self-inductances.

The curves of A and i_2 are plotted in Figs. 6 and 7 in which the dot-dash straight line shows the value of $SM (S = 10^{-4}$ ohm^{-1}; $M = 2.10^{-4}$ henry $\therefore SM = 2.10^{-8})$. Oscillations are possible whenever the A curve lies below this line. For $k^2 = 0{\cdot}08$ the oscillation ω' with the greater frequency and therefore shorter wavelength, is possible for values of C_2 above 1,400 cm, those with the longer wavelength for values of C_2 below 1,630 cm. Between 1,400 and 1,630 cm both oscillations are possible. On switching on in this range both oscillations are present at first, but that with the smaller value of A increases more rapidly in amplitude and reaches sooner that value of grid potential for which the anode current is nearly independent of the grid

TABLE I.—$k^2 = 0{\cdot}08$.

C_2 cms	$\omega_{20}^2 \times 10^{12}$	$\omega'^2 \times 10^{12}$	$\omega''^2 \times 10^{12}$	$Z_2'^2$ (ohm)^2	$Z_2''^2$ (ohm)^2	$L' \times 10^5$	$L'' \times 10^5$	R' ohms	R'' ohms	$A' \times 10^{-8}$	$A'' \times 10^{-8}$	i_2' $\times 10^{-5} \times \frac{I_0}{2} \times \sqrt{L_1L_2}$	i_2''
500	5·14	5·8	1·60	96	980	1·14	4·14	41	2·0	6·1	0·57	4·86	5·1
1,100	2·34	2·90	1·45	114	254	2·35	4·52	19	2·8	3·07	0·87	7·8	12·4
1,300	1·98	2·56	1·39	132	178	2·64	4·75	13	4·7	2·21	1·19	9·4	12·9
1,500	1·71	2·37	1·29	150	133	2·85	5·00	9·6	7·4	1·74	1·62	10·5	12·7
1,700	1·51	2·20	1·20	168	100	3·00	5·24	7·5	11·4	1·44	2·24	11·3	12·2
1,900	1·35	2·14	1·13	186	76	3·13	5·56	6·0	17·0	1·22	3·13	12·0	11·5
2,100	1·22	2·08	1·04	204	58	3·22	5·90	5·0	24·5	1·08	4·29	12·4	11·0
2,300	1·12	2·04	0·99	222	45	3·30	6·36	4·3	37·5	0·98	6·34	12·5	9·6
2,500	1·03	1·99	0·94	240	37	3·34	7·10	3·8	65	0·91	10·5	12·5	7·0
3,000	0·86	1·96	0·79	275	28	3·57	8·4	3·1	201	0·82	31·2	12·1	3·1

TABLE II.—$k^2 = 0{\cdot}02$.

C_2 cms	$\omega_{20}^2 \times 10^{12}$	$\omega'^2 \times 10^{12}$	$\omega''^2 \times 10^{12}$	$Z_2'^2$ (ohm)^2	$Z_2''^2$ (ohm)^2	$L' \times 10^5$	$L'' \times 10^5$	R' ohms	R'' ohms	$A' \times 10^{-8}$	$A'' \times 10^{-8}$	i_2' $\times 10^5 \times \frac{I_0}{2} \times \sqrt{L_1L_2}$	i_2''
1,100	2·34	2·49	1·59	34	236	2·74	4·14	45	1·6	7·07	0·65	5·85	9·24
1,300	1·98	2·17	1·55	46	121	3·09	4·28	22	3·2	3·66	0·91	8·45	12·9
1,500	1·71	1·97	1·48	64	67	3·39	4·52	11	7·8	1·96	1·63	11·3	13·0
1,700	1·51	1·86	1·38	90	39	3·57	4·83	5·7	19	1·22	3·37	12·9	10·6
1,900	1·35	1·80	1·27	118	26	3·70	5·17	3·7	40	0·92	6·51	13·0	8·35
2,100	1·22	1·78	1·16	147	21	3·75	5·50	2·7	56	0·79	8·95	12·3	7·6
2,300	1·12	1·76	1·08	169	15	3·79	5·66	2·3	95	0·72	14·9	11·6	6·2
2,500	1·03	1·74	1·00	189	13	3·81	5·80	2·0	126	0·69	19·5	10·6	5·7

potential and therefore of the small fluctuations of grid potential due to the weaker oscillation. The anode current therefore fails to reinforce the weaker oscillations in the grid circuit, and this oscillation dies out leaving only the other one. $C = 1{,}530$ cm is the critical point at which it appears uncertain which oscillation would be established.

If, however, the oscillation is first set up and then C_2 gradually varied, this oscillation will persist until it becomes impossible, the wavelength and current will then suddenly jump to the values corresponding to the other oscillation. In Fig. 6 for example, with large values of C_2 the first oscillation (ω') is obtained; as C_2 is diminished the aerial current increases, passes through a maximum which has nothing to do with resonance, then follows the curve 6, 5, 4, 7, when it suddenly jumps up to point 2, increases slightly and then decreases through 1. If one now increases C_2, the current follows the curve 1, 2, 3, then suddenly falls to 4 and increases through 4, 5, and 6 and so on. If the crossing point 5 lies within the region defined by the points 2, 3, 4, 7, the sudden changes of current are both in the same direction.

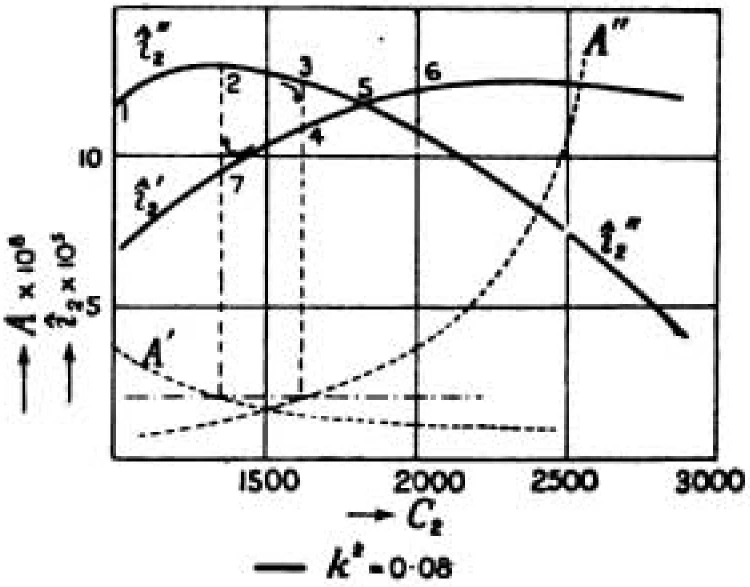

FIG. 6.

The essentially important magnitude in the phenomenon under discussion is A which is plotted in Fig. 8 for various values of the coupling. In the limiting case of infinitely loose coupling, the A curves become two horizontal lines which turn sharply vertical at $\omega_{20} = \omega_{10}$; in this case the two current curves coincide and there is no discontinuity. As soon as the coupling is tight enough to distinguish the two coupled frequencies, a jump in wavelength and current always occurs in the neighbourhood of $\omega_{20} = \omega_{10}$.

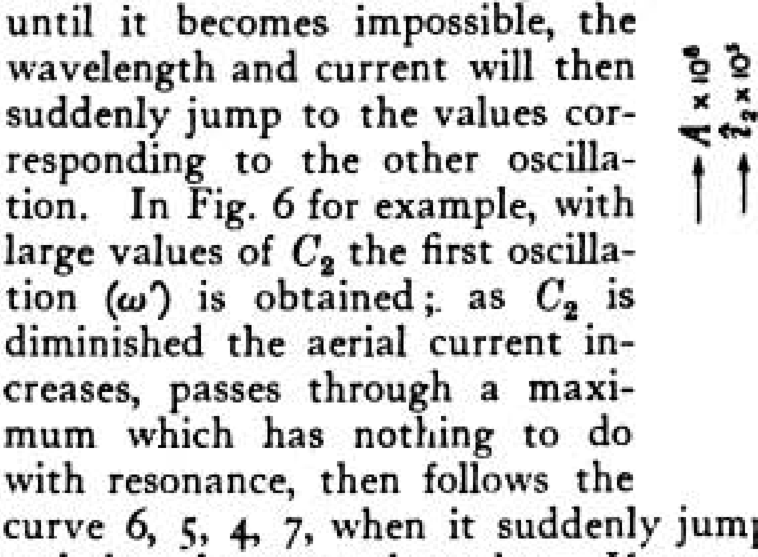

FIG. 7.

The effect of the ratio of L_1 to C_1 in the primary circuit on the nature of the phenomenon is shown in Fig. 9. The natural frequency of the circuits is the same in each case, but in the first case L_1 is small and in the second large. In the first case the antenna current jumps from a small to a large value, whereas in the second case the jump is in the reverse direction. The jump in the frequency is, however, always up when increasing C_2 and down when decreasing it. The ratio of L_1 to C_1 can be chosen such that the two current curves almost coincide with the result that the jump in the current is almost imperceptible; the jump in the frequency still occurs, however, and the aerial may therefore show the same current with the same value of C_2 on two occasions but be oscillating at a different wavelength.

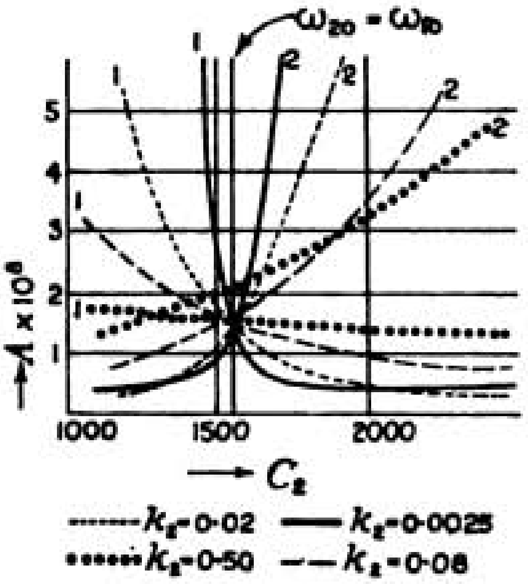

FIG. 8.

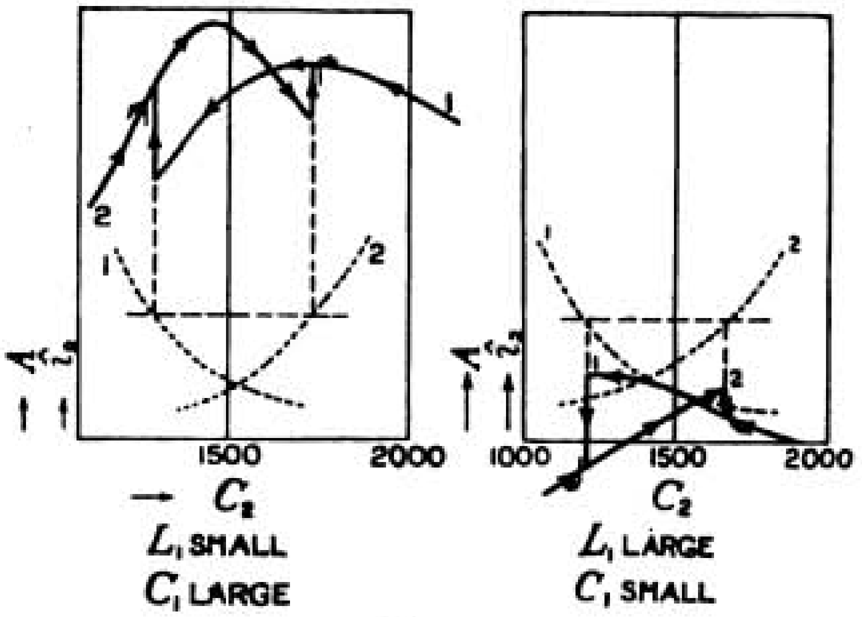

FIG. 9.

Equation (24) shows that a similar effect to that of varying the ratio L_1/C_1 may be obtained by varying R_i say by altering the filament current. The first case in Fig. 9 corresponds to a low temperature of filament and a consequently large value of R_i. All these results have been confirmed by experiments made by Seitz.*

The Current in the Primary Circuit.

From equation (22) we have

$$\hat{i}_L = \frac{I_0}{2\omega} \frac{1}{(L/R_i) + C_1 R}.$$

Since this contains in the denominator the expression $\frac{L}{R_i} + C_1 R$ which we have designated by A, it is obvious that i_L changes suddenly at the same moment as i_2. It is noteworthy that the two values of i_L plotted against C_2 show no maximum except for $C_2 = 0$ and $C_2 = \infty$. This is seen in Fig. 10 in which the arrows show the order in which the curves are followed on increasing or decreasing C_2.

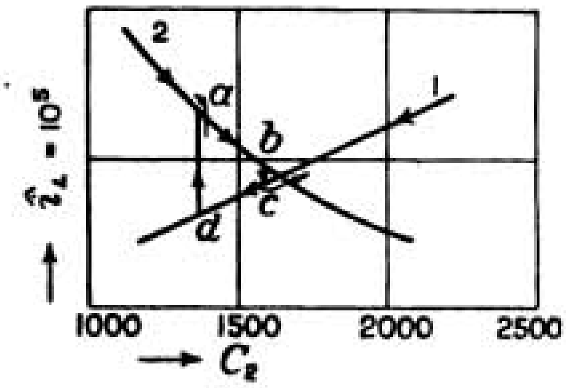

FIG. 10.

No reference has been made to energy

---

* W. Seitz, *Jahrbuch Zeitschrift für drahtlose Telegraphie*, 15, p. 460, 1920—see Abstract 1605, March, 1921.

relations. This would require a more accurate assumption as to the valve characteristic, a consideration of the grid current and of the fact that the grid circuit has a natural period which may fall within the range here considered.

The object of the present paper was to show how the experimentally observed facts can be explained on the simplest assumptions.

Review of Radio Literature.

1. Abstracts of Articles and Patents.

(F.) **Thermionic Valves** (and Valve Apparatus).

(3) THEORY AND PHYSICS OF THERMIONIC VALVES.

1891. **L. C. Pocock.** Distortion in Thermionic Tube Circuits. (*Electrician*, 86, pp. 246—247, February 26th, 1921.)

In some uses of thermionic tubes as amplifiers there is little concern for faithful reproduction of the input waveform, yet for telephone amplification and similar purposes, distortion is a great disadvantage. This article discusses mathematically the distortion in such tubes arising in the grid and in the anode circuits, primarily through the variation of the impedance of the inter-electrode capacities with variation of the frequency of the input E.M.F. Distortion of the waveform of the input E.M.F. may arise from the non-linear nature of the tube characteristic if the amplitude is too great. A milliammeter in the plate circuit gives a useful indication of this distortion, as for minimum distortion there should be no change in its reading whether or not the alternating input E.M.F. is applied to the tube.

1892. **D. Owen and R. M. Archer.** The Quickness of Response of Current to Voltage in a Thermionic Tube. (*Proceedings of the Physical Society of London*, 33, pp. 104—115, February 15th, 1921.)

Steady voltages were applied between the hot and cold electrodes of a thermionic tube, for intervals of time which could be varied from 0·00001 second to a minute or longer. The mean current during the interval was measured by the Wheatstone bridge, using a null ballistic method. Both soft and hard valves were employed. The results point to the practical conclusion that in order to avoid phase difference between the current and the applied voltage, and consequent distortion at telephonic frequencies of signals transmitted through the tube, the vacuum should be as high as possible.

1893. **E. V. Appleton.** A method of Demonstrating the Retroactive Property of a Triode Oscillator. (*Proceedings of the Physical Society of London*, 33, pp. 100—103, February 15th, 1921.)

An approximate mathematical treatment (suggested by the work of Vallauri) is given of the conditions which give rise to retroaction between the grid and anode circuits of a triode valve, and expressions are given for the oscillation times of the circuit with and without retroaction. A simple lecture method of demonstrating the difference between these times is described. It consists in charging a condenser from a battery and discharging it through a coil included in the grid circuit of a triode. The natural frequency of the circuit is adjusted to be within the audible limits, and a marked difference is noticeable in the time during which the oscillation persists when the valve circuits are coupled and when they are separated.

1894. **W. Schottky.** Back-coupling in Double Grid Valves with Anode Protective Grids. (*Jahrbuch Zeitschrift für drahtlose Telegraphie*, 17, p. 51, January, 1921.)

Barkhausen has said that the danger of unavoidable back-coupling in amplifiers is greater with this type of valve than with the ordinary single grid type. Schottky states that by suitable design of the leads in the bulb and also of the socket, the capacity between the grid and anode circuits can be so reduced that there is no danger of self-excitation due to back-coupling.

1895. **G. Stead.** On the Design of Soft Thermionic Valves. (*Philosophical Magazine*, 41, pp. 470—482, March, 1921.)

An account is given of experiments which led up to the design of a satisfactory soft valve for naval uses. The chief points considered in the paper are: (1) The effect on the valve characteristic of the position of the grid with respect to the filament, and of the closeness of the grid structure. (2) The effect of the pressure and nature of the gas on the valve characteristics and on the production of oscillations. Nitrogen, argon, and helium were studied from this point of view, and it was found that there were serious objections to the first two gases, but that helium was very satisfactory. (3) A method of estimating the pressure of the gas in a sealed valve is given, and the effect of nitrogen and helium in cooling the filament by conduction and convection is considered.

1896. **A. Marcus.** Calculation of the Amplification Constant of the Weagant Thermionic Vacuum Tube. (*Physical Review*, 17, pp. 1—6, January, 1921. *Electrical World*, 77, p. 441, February 19th, 1921. *Technical Review*, 8, p. 142, February 8th, 1921—Abstract.)

The Weagant thermionic tube has the control electrode on the outside and because of the presence of the glass wall amplification is not possible for constant grid potentials. By making some simplifying assumptions, it has been found possible to develop a theoretical expression for the amplification constant which involves the dimensions of the tube and the resistivity of the glass wall. When the resistivity is either very high or very low, the amplification is small; in the latter case it is shown to depend solely on the dimensions.

1897. **W. Bragg.** Electrons. (*Journal of the Institution of Electrical Engineers*, 59, pp. 132—137, January, 1921. *Engineering*, 111, pp. 120—122, January 28th, 1921—Abstract.)

The full paper corresponding to abstract references No. 1595, March, 1921.

1898. **J. S. Townsend.** Collisions of Electrons and Molecules of a Gas: Distribution of Velocity of Electrons Moving under an Electric Force. (*Philosophical Magazine*, 40, pp. 505—511, October, 1920. *Science Abstracts*, 24A, pp. 128—129, Abstract No. 290, February 28th, 1921—Abstract.)

A criticism of Pedersen's method of calculating ionisation potentials. See RADIO REVIEW Abstract No. 800, September, 1920.

1899. **F. Horton and Miss A. C. Davies.** An Experimental Determination of the Critical Electron Velocities for the Production of Radiation and Ionisation on Collision with Argon Atoms. (*Proceedings of the Royal Society*, 97A, pp. 1—23, March 1st, 1920.)

1900. **F. Horton and Miss A. C. Davies.** The Effects of Electron Collision with Atmospheric Neon. (*Proceedings of the Royal Society*, 98A, pp. 124—146, October 1st, 1920.)

1901. **G. Breit.** The Calculation of Detecting and Amplifying Properties of an Electron Tube from its Static Characteristics. (*Physical Review*, 16, pp. 387—407, November, 1920; and 15, p. 553, June, 1920—Abstract. *Science Abstracts*, 24A, p. 218, Abstract No. 516, March 31st, 1921—Abstract.)

In the calculation of the detecting efficiency of an electron tube it is assumed that the static characteristics are available and that the constants of the circuits used with the tube are also known. From these quantities the average change in the plate current for a given amplitude of impressed grid voltage is derived. The input impedance is also calculated for the case of both positive and negative grid voltages. The amplification due to a single tube is given by the expression

$$\xi = \frac{1}{\frac{1}{r_p} + \frac{1}{(1/jC_{2\omega})}}$$

where r_p is the internal resistance C_2 is the grid-plate capacity and $\omega/2\pi$ is the frequency. The majority of the formulæ derived are too complex to be abstracted.

1902. **E. O. Hulburt and G. Breit.** The Detecting Efficiency of the Single Electron Tube. (*Physical Review*, 16, pp. 408—419, November, 1920; and 15, pp. 552—553, June, 1920—Abstract. *Science Abstracts*, 24A, pp. 218—219, Abstract No. 517, March 31st, 1921—Abstract.)

Reference is made to an earlier paper on the detecting efficiency of the electron tube amplifier.* In the present paper the detecting efficiency of a single tube is investigated, theoretically and experimentally. If the grid potential E_g is given by $A \cos \omega t$ then it is found that the detecting efficiency

$$= \frac{r_p^2 \dfrac{\partial^2 I_p}{\partial E_g^2}}{4\left(1 + \dfrac{R_0}{r_p}\right)[(R_p + r_p)^2 + X_p^2]}$$

where I_p is the plate current, R_0 is the D.C. resistance of the plate circuit, R_p is the resistance of the plate circuit at frequency $\omega/2\pi$, X_p is the reactance of the plate circuit at frequency $\omega/2\pi$, and r_p is the internal resistance of the tube, and where the derivative $\partial^2 I_p/\partial E_g^2$ is taken with the assumption that E_p is kept constant and is to be evaluated for values of E_p and E_g when $A = 0$.

The formulæ for detecting efficiency were tested by inserting an inductance shunted by a variable condenser in the plate circuit of the tube thus making R_p large. Qualitative agreement with the formulæ was then shown and it was found that exact agreement could not be obtained unless the internal capacities of the tube were taken into account. The sudden drop in signal strength observed sometimes with Armstrong's tuned plate circuit is explained by the theory in the paper.

1903. **E. O. Hulburt and G. Breit.** The Detecting Efficiency of the Electron Tube Amplifier. (*Physical Review*, 16, pp. 274—281, October, 1920; 15, pp. 551—552, June, 1920—Abstract.)

A paper read before the American Physical Society in which it was shown that the general problem of investigating the behaviour of an amplifier requires consideration of two other problems, firstly the action of the amplifier itself and secondly the effect of the reaction between the amplifier and the external input circuit. The first is termed the problem of detecting efficiency, and the second that of the input impedance. The paper deals particularly with the detecting efficiency of the amplifier. Experiments were arranged to effect measurements of the input and output currents of a three-valve high-frequency transformer coupled amplifier. The experimental values of the detecting efficiencies were measured for various wavelengths and the amplification due to each tube of the amplifier was measured. It was found that the sound intensity in the telephones was increased in the ratio of 1,000 to 1 owing to the use of the first three tubes.

1904. **C. Davisson and H. A. Pidgeon.** The Emission of Electrons from Oxide-coated Filaments. (*Physical Review*, 15, pp. 553—555, June, 1920.)

A tungsten or other metallic filament coated with only a very minute quantity of barium oxide exhibits when heated thermionic activity comparable with that of oxide filaments coated in the usual way. Measurements on such a thinly-coated filament are described in the paper. The results show that the maximum emission occurs when the number of molecules deposited on the metal filament is not more than 30 per cent. of the number required to form a layer one molecule deep.

1905. **F. L. Mohler and P. D. Foote.** The Ionisation and Resonant Potentials of Nitrogen, Oxygen and Hydrogen. (*Physical Review*, 15, pp. 555—556, June, 1920.)

Abstract of a paper read before the American Physical Society. The results obtained are set out in tabular form.

---

* RADIO REVIEW Abstract No. 1903.

1906. **L. M. Hull.** Operation of an Electron Tube as an Amplifying Receiver. (*Physical Review*, 15, pp. 557—559, June, 1920.)

Abstract of paper communicated to the American Physical Society.

Expressions are derived for the rectification and amplification given by a three-electrode tube for two conditions of operation as a detector—when rectification is obtained by (1) utilising the curvature of the grid-current characteristic and (2) by utilising the curvature of the plate-current characteristic the main grid voltage being maintained at a negative voltage value by means of a battery. The effects of the tubes upon the receiving circuit are considered separately.

1907. **R. D. Duncan.** Stability Conditions in Vacuum Tube Circuits. (*Physical Review*, 17, pp. 302—314, March, 1921.)

After reviewing the fundamental requirements for the production of sustained oscillations in three-electrode vacuum tube circuits, the fundamental equation for the plate current of a tube with a linear volt-ampere characteristic is differentiated and an expression obtained giving a general relation between the constants of any oscillating circuit. This expression is evaluated for five standard types of circuit—the Hartley circuit, the Colpitt's circuit, the Meissner circuit and circuits having a tuned plate and a tuned grid. It is experimentally verified for the first two.

1908. **I. G. Barber.** Secondary Electron Emission from Copper Surfaces. (*Physical Review*, 17, pp. 322—338, and p. 393, March, 1921.)

Experiments are described for measuring the emission of secondary electrons from a copper surface bombarded by electrons. The method used was to measure the current flowing to the bombarded plate as a function of the grid potential. The coefficient of secondary emission was found to increase somewhat with the energy of the primary electrons up to 500 volts. The coefficient was increased by heat treating of the plate and was greatly decreased by raising the temperature of the plate. The shape of the curves obtained indicates that the secondary electrons have not been reflected from the plate.

1909. **J. G. Frayne.** The Dynamic Characteristics of Three-electrode Vacuum Tubes. (*Physical Review*, 17, pp. 391—393, March, 1921.)

Abstract of paper presented to the American Physical Society. Expressions are derived for the fundamental and harmonic components of the plate current by means of van der Bijl's expression for the dynamic characteristics when a resistance is included in the plate circuit. Measurements of these harmonics have been made, and they were found to agree in general with the theoretical values. The results show that the assumption that the static and dynamic equations are identical must be true.

Similar measurements were also made with an inductance included in the plate circuit. The experimentally-determined amplitudes were of the same numerical order of magnitude as those predicted by the equations for this case. Similar mathematical solutions for the cases when various combinations of resistance capacity and inductance are used are promised in the complete paper to be published later.

1910. **O. Kopplus.** A Comparison of the Thermionic and Photoelectric Work Function from Platinum. (*Physical Review*, 17, pp. 395—397, March, 1921.)

1911. **K. T. Compton and P. S. Olmstead.** Note on the Radiating and Ionising Potentials of Hydrogen. (*Physical Review*, 17, pp. 45—53, January, 1921.)

1912. **F. L. Mohler and P. D. Foote.** Electron Currents in some Non-metallic Vapours. (*Physical Review*, 15, pp. 321—322, April, 1920.)

1913. **C. Davisson and L. H. Germer.** The Emission of Electrons from Oxide-coated Filaments under Positive Bombardment. (*Physical Review*, 15, pp. 330—332, April, 1920.)

Curves are given summarising the results of experiments on the emission from oxide-coated filaments. It is shown that in well-exhausted tubes the secondary emission under positive bombardment is in general less than $\frac{1}{100}$ of 1 per cent. of the thermionic emission.

1914. **F. Horton and Miss A. C. Davies.** Note on the Resonance and Ionisation Velocities for Electrons in the Monatomic Gases. (*Physical Review*, 15, pp. 498—504, June, 1920.)

(4) AND (5) DESIGN AND CONSTRUCTION OF VALVES; AND TESTS AND MEASUREMENTS ON VALVES.

1915. **H. Mignet.** The Manufacture of Three-electrode Vacuum Tubes by an Amateur. (*La T.S.F. Moderne*, 1, pp. 221—232, October, 1920; pp. 261—274, November, 1920; pp. 303—312, December, 1920; and 2, pp. 14—21, January, 1921.)

Full details are given as to the construction of the apparatus necessary for easily building three-electrode valves.

1916. **The Connecticut Telephone and Electric Company.** Rectifier. (*French Patent* 500376, June 4th, 1919. Published March 10th, 1920.)

In a vacuum tube rectifier the anode is mounted outside the valve. The anode is of non-polarising material and the grid is in the form of a spiral surrounding the filament.

For further particulars see RADIO REVIEW Abstract No. 79, December, 1919.

1917. **V. J. F. Bouchardon and M. A. Lesage.** Valve Construction. (*French Patent* 502628, August 14th, 1919. Published May 21st, 1920.)

The specification describes a construction of grid for three-electrode valves. The grid is constituted by two parallel toothed rings braced by a number of metal rods, and a thin metal wire forming a continuous winding over the rings and accommodated in the notches.

1918. **Société Française pour l'Exploitation des Procédés Thomson-Houston.** Valve Construction. (*French Patent* 503385, August 30th, 1919. Published June 9th, 1920.)

The grid is in the form of a wire wound around a frame and interposed between the cathode and the anode. The cathode consists of a straight or V-shaped filament. See also *British Patent* 147616, of July 8th, 1920. Convention date March 20th, 1914. (British Thomson-Houston Company, assignees of **W. C. White.**)

1919. **General Electric Company, U.S.A.** (British Thomson-Houston Company). Anodes for Vacuum Tubes. (*British Patent* 143630, February 26th, 1919. Patent accepted May 26th, 1920.)

It is proposed to construct the anodes of rectifying and similar valves of an alkali metal such as an alloy of one part of sodium to two parts of potassium by weight. The container may be of glass and may be exhausted or may contain argon, hydrogen or other inert gas.

1920. **V. J. F. Bouchardon and M. A. Lesage.** Relay. (*French Patent* 504849, July 2nd, 1918. Published July 17th, 1920.)

The specification describes a vacuum tube relay containing an incandescent filament and a cold anode. A metal cylinder encircles the tube and variations in the potential of the cylinder cause a variation of the electronic current which is established between the filament and the anode.

1921. **Société Française pour l'Exploitation des Procédés Thomson-Houston.** Rectifier. (*French Patent* 506212, November 18th, 1919. Published August 17th, 1920.)

The incandescent cathode, grid and anode are so spaced in the tube that with a definite potential applied to the grid, the current between the anode and cathode varies proportionately with the anode potential over a definite range. The arrangement may be used with a continuous current ammeter for measuring alternating voltages applied to the anode circuit through a transformer connected in series with the ammeter.

There is a corresponding British Application No. 147819, of July 9th, 1920 (British Thomson-Houston Company, assignees of **W. C. White.** Convention date October 31st, 1917) the patent on which has not yet been granted.

1922. **Le Matériel Téléphonique.** Relay. (*French Patent* 506580, February 10th, 1915. Published August 25th, 1920.)

The relay is of the "audion" type and the novel feature consists in separating the hot cathode and the grid by a space only just sufficient to insulate them, so that a large amplifying ratio is obtained. For further particulars see *British Patent* 1694/1915.

1923. **Le Matériel Téléphonique.** Relay. (*French Patent* 506893, February 10th, 1915. Published August 31st, 1920.)

Two unidirectional thermionic valves are connected in such a manner that each amplifies one half of the wave. The two valves may be combined in a single structure having one heated cathode. For further particulars, see *British Patent* 275/1915.

1924. **E. M. Terry and C. M. Jansky.** The Construction of Three-element Power Electron Tubes. (*Physical Review*, 15, p. 142, February, 1920.)

A short note *re* a new pattern of three-electrode valve. Further particulars are promised later.

1925. **M. Kimura and J. Nagahata.** Unilateral Conductivity of Tubes having a Salt Electrode. (*Memoirs of the College of Science, Kyoto (Japan) Imperial University*, June, 1920. *Electrical World*, 77, p. 441, February 19th, 1921.)

An examination of the conditions of rectification in vacuum tubes having coated electrodes and an explanation of the process of the action.

1926. **S. L. Brown and C. E. Normand.** Characteristics of Vacuum Tubes. (*Physical Review*, 16, p. 365, October, 1920.)

Abstract of a paper contributed to the American Physical Society. The results of measurements on six different patterns of three-electrode valves are summarised in tabular form.

(6) APPLICATION TO GENERATION OF OSCILLATIONS.

1927. **F. Harms.** Theory of Coupled Oscillatory Circuits with Triode Generators. (*Jahrbuch Zeitschrift für drahtlose Telegraphie*, 15, pp. 442—457, June, 1920. *Technical Review*, 7, p. 290, November 30th, 1920—Abstract. *Science Abstracts*, 23B, p. 445, September 30th, 1920—Abstract. *Radioélectricité*, 1, p. 59D, November, 1920—Abstract.)

See pp. 313—322, in this issue for abstract.

1928. **W. C. White.** Electron Power Tubes and some of their Applications. (*General Electric Review*, 23, pp. 514—526, June, 1920. *Electrical World*, 76, pp. 536—537, September 11th, 1920—Abstract. *Science Abstracts*, 23B, p. 444, Abstract No. 846. September 30th, 1920—Abstract. *Radio News*, 2, pp. 204—205, October, 1920, *L'Elettrotecnica*, 8, pp. 14—15, January 5th, 1921—Abstract. *Revue Générale de l'Électricité*, 9, pp. 58D—59D, February 19th, 1921—Abstract.)

A full exposition is given of the factors of design and construction that determine the output of three-electrode valves for transmitting purposes. These include :—

(1) Dissipation of energy in the form of heat at the anode, which causes deterioration of the vacuum.

(2) Insufficient electron emission, resulting in a definite limitation of the anode current and of the energy input to the tube.

(3) Insufficient exhaust.

(4) Insufficient dielectric strength in the materials holding the electrodes and in the lead-in wires and terminals.

(5) Insufficient mechanical strength to withstand the mechanical force due to electrostatic fields.

(6) Improper geometrical design or construction.

The properties of oscillating circuits suitable for high-power tubes are discussed and illustrated. Descriptions are given of various forms of valve transmitting units using as many as thirty tubes in parallel.

1929. A Tube Set operated on A.C. without Rectification. (*Everyday Engineering Magazine*, 10, pp. 62—63, October, 1920.)

Details are given of a valve transmitter designed by the Bureau of Standards.

1930. **W. C. White.** Some Practical Operating Features of Tungsten Filament Electron Tubes. (*General Electric Review*, 23, pp. 840—846, October, 1920.)

This article discusses some of the unusual effects which often occur in the experimental operation of valve transmitting apparatus. These are considered under the following headings : The Filament ; The Grid ; The Plate or Anode ; Bulb and Glass ; Vacuum Conditions ; Vacuum Tube Circuits and their Operation ; Power Supply. A number of practical hints are given.

1931. **Le Matériel Téléphonique.** Continuous Wave Transmitter. (*French Patent* 503718, September 11th, 1919. Published June 16th, 1920.) Also **Western Electric Company.** (*British Patent* 152811, August 7th, 1919.)

The system described is one employing a thermionic oscillation generator and a thermionic modulator for modulating oscillations in accordance with the low-frequency signal fluctuations. The three electrodes of the generator are connected to points of different potential in the aerial circuit, so that the frequency generated is primarily determined by the constants of that circuit. For instance both the anode and grid of the valve may be connected to tapping points on the aerial tuning inductance (the latter through a blocking condenser), the valve filament being earthed and a condenser being connected between the lower end of the aerial tuning inductance and earth. The "choke" control method of modulation is shown in the circuit diagrams.

1932. **Le Matériel Téléphonique.** Continuous Wave Transmitter. (*French Patent* 505108, September 11th, 1918. Published July 23rd, 1920.)

In transmitting apparatus in which the oscillations are generated by a thermionic generator, the signal producer, for example a microphone or an amplifier of the microphone current, is connected across the battery and choke coil supplying current to the plate circuit of the generator. For further particulars see *British Patent* 133366.*

1933. **Société Française pour l'Exploitation des Procédés Thomson-Houston.** Continuous Wave Transmitter. (*French Patent* 506979, April 10th, 1919. Published September 2nd, 1920.)

For the production of currents of two or more frequencies one or more of which may be audible and the others of radio frequency, a three-electrode vacuum tube is employed in the manner indicated in Fig. 1, which shows the arrangement for the generation of radio frequency currents having an audible group frequency. The circuit $L_1C_1L_2C_2$ is tuned to the radio frequency, and the circuit $L_3C_3L_4C_2$ to the audio frequency. G is the H.T. generator supplying the plate circuit. For further particulars see *British Patent* 152365.

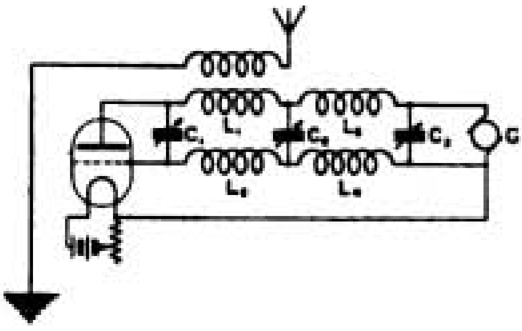

FIG. 1.

1934. **G. Leithauser and K. Hoegner.** The Production of Alternating Current by means of Two Triodes. (*Jahrbuch Zeitschrift für drahtlose Telegraphie*, 17, pp. 21—39, January, 1921. *Verhandlungen der deutschen Physikalischen Gesellschaft*, 1, p. 89, December 31st, 1920.)

A study of methods of generating A.C. in which the phase of the anode P.D. of the first valve has to be reversed in the second valve before back-coupling to the grid of the first valve. The coupling between the first anode and second grid is by means of anode resistance or reactance and a grid tapping through a condenser; the back coupling from the second anode to the first grid is by pure capacity, *i.e.*, two condensers in series, tapped off to the grid from their junction point. The circuits are investigated mathematically and their advantages discussed.

1935. **E. Takagishi.** Behaviour of a Three-electrode Vacuum Tube as an Oscillation Generator. (*Electrician*, 86, pp. 346—348, March 25th; pp. 374—375, April 1st, 1921.)

A mathematical study of the generation of oscillations with a three-electrode tube from the standpoint of the dynamic characteristics. It is pointed out that the derived characteristics can be obtained from the constants of the circuits with which the tube is used; and equations are developed for the oscillation current, power output, etc. Experimental measurements confirming the theory are set out in detail with curves.

1936. **J. Scott-Taggart.** The Production of Continuous Oscillations in Circuits which contain Capacities of High Value. (*Electrical Review*, 88, pp. 7—8, January 7th, 1921.)

In order to overcome the difficulty frequently experienced with a three-electrode valve

---

* RADIO REVIEW Abstract No. 338, May, 1920.

arranged for oscillation generation that the oscillations cease when the capacity of the oscillation circuit is varied over a wide range, it is proposed to employ one or more amplifying valves to magnify the retroactive impulses from the anode back to the grid. Circuit diagrams are shown using one or two extra valves for this purpose, and a resistance is included in the anode circuit of the last amplifying valve to provide the necessary retroactive coupling back to the grid of the first or main oscillator valve.

1937. **J. Scott-Taggart.** A Vacuum Tube Oscillator. (*Wireless Age*, 8, p. 20, January, 1921.
Refers to the use of an ordinary three-electrode vacuum tube as a dynatron for generating continuous oscillations. (See also RADIO REVIEW, 2, p. 220, April, 1921.)

1938. **A. N. Goldsmith.** The Production and Control of Radio Frequency Oscillations. (*Wireless Age*, 8, pp. 19—20, December, 1920.)
An arrangement is described using six three-electrode valves for radiotelephonic transmission purposes, one being employed for oscillation generation, one for modulation by the constant current control method, one for low-frequency amplification of the microphone currents and three for high-frequency amplification of the modulated radio frequency currents.

1939. **E. J. Jones.** A Wireless Telephony Set. (*Wireless Age*, 8, pp. 23—26, December, 1920.)
Detailed constructional details are given.

1940. **J. Scott-Taggart.** Radiotelephony Systems employing Thermionic Vacuum Tubes. (*Wireless Age*, 8, pp. 17—18, January, 1921; pp. 17—19, February, 1921; pp. 21—23, March, 1921; and pp. 17—18, April, 1921.)
Descriptions are given of various modulation arrangements using three-electrode valves.

1941. **R. A. Heising.** A Vacuum Tube Transmitter. (*Wireless Age*, 8, p. 23, March, 1921.)
The modulation arrangement involves the use of a double grid tube for effecting the modulation of the high-frequency energy. Voltage impulses from the H.F. source are impressed upon one grid whilst the transmitting microphone is inductively coupled to the second.

1942. **R. Dubosq.** An American Wireless Telephone Installation. (*La T.S.F. Moderne*, 1, pp. 298—302, December, 1920.)
An illustrated description, giving details of the mode of construction.

---

(7), (8) AND (9) MISCELLANEOUS APPLICATIONS OF TWO- AND THREE-ELECTRODE VALVES, AND ACCESSORIES FOR VALVE CONSTRUCTION (PUMPS, ETC.).

1943. **R. L. Smith-Rose.** Some Applications of Thermionic Valve Rectifiers. (*Beama Journal*, 7, pp. 567—571, June, 1920; pp. 20—24, July, 1920.)
Continues a previous description of the kenotron and its application to X-ray tubes and the measurement of peak voltages. The two-electrode valve is also discussed as a low-voltage rectifier. Many circuit diagrams and sketches of rectifying tubes are also included.

1944. **V. J. F. Bouchardon and M. A. Lesage.** Relay. (*French Patent* 503935, December 4th, 1917. Published June 21st, 1920.)
The specification describes an incandescent cathode relay which consists of a vacuum tube containing two electrodes (an incandescent filament and a cold anode) and a solenoid to produce a magnetic field, the said solenoid being excited by the incoming current. The field of the solenoid is employed to modify the trajectory or path of the electrons and cause a variation of the electronic current. A field produced by a continuous current is employed to give stability to the electron field.

1945. **S. Butterworth.** The Maintenance of a Vibrating System by means of a Triode Valve. (*Proceedings of the Physical Society of London*, 32, pp. 345—360, August 15th, 1920. *Nature*, 105, p. 842, August 26th, 1920—Abstract.)
The paper gives a mathematical analysis of an arrangement previously described by Dr. Eccles whereby vibrations of a tuning fork are maintained by means of a triode valve. The original should be referred to for details.

1946. **R. Whiddington.** Wireless Valve Circuits as applied to the Measurement of Physical Quantities. (*Wireless World*, 8, pp. 739—745, January 22nd, 1921. *Electrical World*, 77, p. 611, March 12th, 1921—Abstract.)

Paper read before the Wireless Society of London on Tuesday, December 21st, 1920. See also RADIO REVIEW Abstract No. 1629, March, 1921.

1947. **A. Bailey.** An Improved Form of McLeod Gauge. (*Physical Review*, 15, pp. 319—320, April, 1920.)

1948. **S. Dushman and C. G. Found.** Studies with the Ionisation Gauge. I. Construction and Method of Calibration. (*Physical Review*, 17, pp. 7—19, January, 1921; also 15, pp. 133—134, February, 1920—Abstract.)

1949. **S. Dushman and C. G. Found.** Studies with the Ionisation Gauge. II. Relation between Ionisation Current at Constant Pressure and Number of Electrons per Molecule of Gas. (*Physical Review*, 15, pp. 134—135, February, 1920.)

1950. A New Form of High Vacuum Pump. (*Iron Age*, May 6th, 1920. *Technical Review*, 7, p. 389, December 21st, 1920—Abstract.)

A new form of high-vacuum pump not requiring oil immersion is described. The apparatus is designed to give a vacuum suitable for incandescent lamps, X-ray tubes, etc.

1951. **R. B. Walles.** Production of High Vacua in the Laboratory. (*Experimental Science*, 1, pp. 53 and 62, August, 1920.)

A description of the Langmuir mercury vapour pump.

1952. **S. Dushman.** The Production and Measurement of High Vacua. (*General Electric Review*, 23, pp. 493—502, June; pp. 605—614, July; pp. 672—683, August; pp. 731—740, September; pp. 847—855, October, 1920; also 24, pp. 58—68, January, 1921; pp. 244—252, March; pp. 436—443, May, 1921.)

This article first discusses the fundamental principles of the kinetic theory of gases which are of importance in connection with the discussions of methods for production and measurement of high vacua, with which the remainder of the article deals in detail. Sections are devoted to the Number of Molecules per Unit Volume; The Rate at which Molecules Strike a Surface; Mean Free Path of Molecules; Molecular Diameters, including Tables of Molecular Diameters for various Gases; Laws of Molecular Flow; Laws of Flow at High Pressure; Thermal Molecular Flow. The various methods for the production of high vacua are classified, and illustrated descriptions are given of many different types of high vacuum pump. The measurement of high vacua is next considered and descriptions are given of different types of manometers including theoretical discussions of various methods of measuring high vacua. The types of manometers particularly considered are mercury manometers such as Rayleigh's gauge and the McLeod gauge; mechanical manometers; viscosity manometers; radiometer gauges—Crooke's radiometer, Knudsen's gauge and its modifications; resistance radiometers including the Pirani-Hale gauge; and ionisation gauges. The adsorption of gases by charcoal and palladium-black is also discussed, together with their use at very low temperatures for improving the vacuum in sealed-off tubes. A number of experimental results are included in the form of tables and curves of adsorption by charcoal. The composition and quantities of residual gases evolved by glass and metals *in vacuo* are discussed at length, and mechanical methods of removing these residual gases are also considered together with the electrical "clean-up" phenomena occurring at low pressures.

(G.) Transmitter Control or Modulation.

1953. **E. H. Shaughnessy.** The Use of a Spacing Wave in Continuous Wave Wireless Telegraphy. (*Post Office Electrical Engineers' Journal*, 14, pp. 30—32, April, 1921.)

Refers to the development of the Poulsen arc, and the use of a spacing wave for signalling with high-power arcs. Contrary to usual opinions, the use of a spacing wave is regarded as advantageous if the wavelength change is small (0 8 per cent. is mentioned as suitable for 15,000 metres wavelength), as its use introduces fewer harmonics and less disturbance of the æther than when the aerial circuit is keyed directly at high speeds. The disadvantages of using more power may be much more than outweighed by the possibility of crowding more stations into the total available zone of wavelengths.

1954. **J. H. Hammond.** Hammond's Selective Receiver. (*Wireless Age*, 8, p. 18, November, 1920.)

A method of signalling which consists in varying the coupling between the primary and secondary of the transmitting jigger by rotating the primary coil relative to the secondary by means of an electromagnetically operated crank.

1955. **Société Française pour l'Exploitation des Procédés Thomson-Houston.** Continuous Wave Transmitter. (*French Patent* 506988, April 14th, 1919. Published September 2nd, 1920.)

The specification describes a wireless signalling system employing continuous waves in which amplitude pulsations of the oscillations in the antenna are produced by a series of alternating currents of different frequencies, of a lower order than the wave frequency.

For further particulars, see *British Patent* 128682. (RADIO REVIEW Abstract No. 30 November, 1919.)

1956. **J. Brun.** The Application of High-speed Telegraphic Apparatus to Radio Work. (*Radioélectricité*, 1, pp. 432—440, February; pp. 477—487, March, 1921.)

A good description is given of the arrangements that may be used, and includes a preliminary consideration of duplex working with high-power stations.

The arrangements of high and low-frequency amplifiers are described and the connection schemes given for coupling them to the relays necessary for operating the printing mechanism. The Wheatstone, Creed, and Baudot apparatus are described and illustrated.

1957. **L. Levy.** Secrecy Systems of Wireless Signalling. (*British Patent* 143583, August 2nd, 1918. Patent accepted June 3rd, 1920.)

A secrecy method of wireless signalling is described depending upon the use of a supersonic heterodyne, as well as an ordinary heterodyne for telegraphic signalling; and a similar method, with the omission of the lowest frequency heterodyne for telephonic work. The oscillations of the main transmitting valve are modulated by means of another valve oscillating at a supersonic frequency, and the signalling currents, whether telephonic or telegraphic, are impressed upon this medium frequency oscillator so as to modulate its output. Various arrangements of the receiving apparatus are also described.

1958. **E. S. Purington.** The Load on the Modulator Tube in Radio Telephony Sets. (*Physical Review*, 15, pp. 556—557, June, 1920.)

Abstract of a paper contributed to the American Physical Society in which it is pointed out that the load on the modulator tube in a radio telephone transmitter usually approximates to a resistance, but reactive components may arise through imperfections in the choke coil included in the H.T. supply circuit; through the use of a choke coil of high radio frequency reactance in series with the oscillating valve; and through the power necessary to change the electromagnetic energy associated with the antenna or oscillating circuits. The first of these three effects is usually the most important in short range telephone sets but the others become increasingly important with higher-powered installations.

1959. **R. A. Heising.** Heising's Modulator Method. (*Wireless Age*, 8, pp. 20—21, November, 1920.)

The arrangement consists essentially in the use of a valve amplifier between the modulating microphone and field windings of a high-frequency alternator used to supply the energy to the transmitting aerial.

1960. **Société Française pour l'Exploitation des Procédés Thomson-Houston.** Continuous Wave Transmitter. (*French Patent* 506982, April 10th, 1919. Published September 2nd, 1920.)

For the production of an electric wave of radio frequency, a source of alternating current of radio frequency is connected to the aerial through two parallel circuits containing magnetic controllers of a particular type. For further particulars, see *British Patent* 16443/1915.

1961. **Société Française pour l'Exploitation des Procédés Thomson-Houston.** Transmitter. *French Patent* 506983, April 12th, 1919. Published September 2nd, 1920.)

The specification describes a system for the control of high-frequency alternating currents such as are used in wireless signalling, in which a special form of magnetic controller is employed. The signalling or controlling windings of the controller are arranged to cover substantially the whole of the magnetic circuit of the high-frequency windings, which are so arranged that their inductive effect on the controlling windings is neutralised. In one form of the controller illustrated the high-frequency windings are wound separately on two parallel bars and are completely surrounded by the controlling winding. For further particulars, see *British Patent* 103842.

1962. **W. S. Tucker** and **E. T. Paris.** A Selective Hot-wire Microphone. (*Transactions of the Royal Society*, 221A, pp. 389—430, March 3rd, 1921.)

A description with an account of tests on the instrument.

1963. **The Magnavox Company.** Telephone Transmitter. (*French Patent* 499748, July 5th, 1918. Published February 20th, 1920.)

The specification describes a telephone transmitter.

1964. **Gesellschaft für drahtlose Telegraphie.** Circuit for Wireless Telephony. (*German Patent* 305027, September 1st, 1917. Patent granted January 13th, 1920. An addition to *Patent* 300783. *Jahrbuch Zeitschrift für drahtlose Telegraphie*, 16, p. 306, October, 1920—Abstract.)

A "quiescent aerial" arrangement in which oscillations are only generated when the microphone is spoken into.

1965. **E. B. H. Wade.** Meniscus Microphones. (*Engineer*, 131, p. 442, April 22nd, 1921.)

Describes a special form of liquid microphone in which the resistance variations take place in an orifice 0·3 mm diameter in a glass tube just touching the surface of a liquid meniscus.

1966. Connecting Wire and Wireless Telephones. (*Elektrotechnische Zeitschrift*, 42, p. 160, February 17th, 1921.)

Refers to a connection established between a vessel in the Atlantic and the radio telephone exchange at Catalina Island.*

1967. **Long-distance Telephony.** (*Nature*, 107, pp. 241—242, April 21st, 1921.)

Refers to some long-distance wire telephone tests (5,500 miles), part of the route being the wireless link between Catalina Island and the mainland.

1968. **G. Valensi.** The Telephonic Relays of the Western Electric Company. (*Annales des Postes, Télégraphes et Téléphones*, 10, pp. 63—101, March, 1921.)

A description of various thermionic valve relay arrangements, with characteristic curves of the tubes, and a mathematical discussion of their conditions of operation.

1969. **E. W. Scripture.** Nature of Vowel Sounds. (*Nature*, 106, pp. 664—666, January 20th, 1921.)

A continuation of an earlier article—see RADIO REVIEW Abstract No. 1647, April, 1921. The artificial manufacture of vowel sounds by means of a puff syren is described; while the remainder of the article is devoted to a study of the structure of vowel sounds and includes formulæ for representing the wave forms.

1970. **H. Fletcher.** The Relative Difficulty of Interpreting the Spoken Sound of English. (*Physical Review*, 15, pp. 513—516, June, 1920.)

An investigation of the errors in the interpretation of speech sounds which were transmitted over an electrical system including thermionic valve amplifying apparatus. The results are given in the forms of tables and curves.

(H.) Radio Receiving Apparatus.

(1) GENERAL ARTICLES ON RECEIVING APPARATUS.

1971. **F. O. Read.** A Short Wave Receiver. (*Wireless World*, 8, pp. 477—478, October 2nd, 1920. *Technical Review*, 7, p. 358, December 14th, 1920.)

1972. A New Receiving Arrangement. (*Radioélectricité*, 1, pp. 57—58, June, 1920. *Telegraphen- und Fernsprech-Technik*, 9, pp. 96—97, August, 1920.)

Refers briefly to tests of a new receiver developed by the *Société Française Radioélectrique*, with which it is claimed that transatlantic messages can be received and photographically recorded without the use of any aerial (antenna, or frame) external to the apparatus itself. Sample records are reproduced. Simultaneous reception of a number of stations can be

---

* See RADIO REVIEW Abstract No. 1060, November, 1920.

effected if the wavelengths differ by more than 2 per cent. Judging from the photographic illustration nine valves are apparently used. Almost perfect freedom from atmospheric interference is claimed.

(See also RADIO REVIEW, pp. 130—132, March, 1921, where further reference is made to the use of this receiving apparatus.)

1973. **M. Adam.** Time Signal Reception. (*Radioélectricité*, 1, pp. 97—101, July, 1920.)
Describes several simple forms of receiving apparatus.

1974. **M. Adam.** The Adjustment of Receiving Aerials. (*Radioélectricité*, 1, pp. 148—153, August; pp. 205—210, September, 1920.)

1975. **M. Adam.** The Reception of Damped Waves. (*Radioélectricité*, 1, pp. 262—266, October, 1920.)

1976. **P. Maurer.** Wireless Receiving Circuits. (*L'Électricien*, 52, pp. 151—153, April 1st, 1921.)
The main forms of simple receiving circuits are outlined.

1977. **C. G. Crawley.** Wireless Reception. (*St. Martin's le Grand*, 31, pp. 69—74, April, 1921.)
A popular article covering similar ground to that referred to in Abstract No. 1081, November, 1920.

1978. **A. A. Isbell.** Radio Taste Reception. (*Annales des Postes, Télégraphes et Téléphones*, 10, p. 187, March, 1921.)
Refers to similar experiments to those described in Abstract No. 1379, January, 1921.)

1979. **J. G. Reed.** Lighting Valve Filaments with A.C. (*Sea, Land and Air*, 3, pp. 124—126, May, 1920.)
Constructional details are given for the necessary transformers.

1980. **J. G. Reed.** Long Wave Receivers. (*Sea, Land and Air*, 3, pp. 682—684, January, 1921.)
Abstract of lecture delivered before the Wireless Institute of Australia, and giving constructional and design details for receiving apparatus.

1981. The Universal Wavelength Receiver. (*Wireless Age*, 8, pp. 26—27, November, 1920.)
A simple form of receiver is described in which the various coils are placed in circuit by means of telephone plugs and jacks.

1982. **H. S. Pyle.** A Sensitive and Compact Multiple Receiver. (*Wireless Age*, 8, p. 22, December, 1920.)

1983. **G. N. Garrison.** Efficient Design of Regenerative and Amplifier Circuits. (*Wireless Age*, 8, pp. 21—22, January, 1921.)

1984. **H. Riegger.** Reception of Electric Waves. (*German Patent* 297935, June 16th, 1914. Patent granted December 10th, 1919. *Jahrbuch Zeitschrift für drahtlose Telegraphie*, 16, p. 153, August, 1920—Abstract.)
A two-circuit receiver with large coefficient of coupling K, natural frequencies N_2 and N_3, and decrements δ_2 and δ_3. The values of these constants are so arranged that if N is the frequency of the sending station the following relations hold

$$\frac{N_2^2}{N^2} - 1 = -\frac{1}{\pi}\sqrt{\frac{\delta_2}{\delta_3}(\pi^2K^2 - \delta_2\delta_3)}$$

$$\frac{N_3^2}{N^2} - 1 = -\frac{1}{\pi}\sqrt{\frac{\delta_3}{\delta_2}(\pi^2K^2 - \delta_2\delta_3)}.$$

1985. **H. Abraham.** On Recent Progress in the Reception of Long Range Wireless Signals. (*Bulletin de la Société Française des Électriciens*, 10, pp. 387—395, November, 1920.)
The full paper to which reference has been made in RADIO REVIEW Abstract No. 1384, January, 1921.

(3) SPECIAL ELECTRON-TUBE DETECTORS AND RECEIVERS.

1986. **Société Française pour l'Exploitation des Procédés Thomson-Houston.** Valve Detector. (*French Patent* 506984, April 12th, 1919. Published September 2nd, 1920.)
A receiving circuit is connected to a vacuum tube having a negative resistance. The

vacuum tube is connected in series with a battery and telephone across the condenser of the resonant receiving circuit. For further particulars, see *British Patent* 114539.

1987. **J. Scott-Taggart.** Some New Circuits for Radiotelegraphy employing a Double Grid Vacuum Tube. (*Electrician*, 86, pp. 87—98, January 21st, 1921.)

A description is given of a double grid vacuum tube designed by the writer of the article (*British Patent* 153681). The application of this valve to the amplification of low-frequency impulses and the reception of continuous waves is discussed in the article and circuit diagrams are given for three different arrangements. The incoming oscillations are applied between the filament and one of the grids, while the second grid may be employed for a retroactive coupling for further amplification or for the generation of heterodyne oscillations. In the latter case the circuit is practically non-radiating.

2. Books.

ADMIRALTY HANDBOOK OF WIRELESS TELEGRAPHY, 1920. (London: *H.M. Stationery Office.* 1920. Pp. viii + 477. $9\frac{1}{4}'' \times 6''$. Price 7*s*. 6*d*. net.)

It is usual for elementary books on wireless telegraphy to contain a few preliminary chapters on electricity and magnetism by way of introduction to the subject. These are usually too brief for the uninitiated to gather any real knowledge of the subject, and so elementary as to be useless to those already possessing some electrical knowledge.

This statement cannot, however, be made of the "Admiralty Handbook of Wireless Telegraphy, 1920," in which the remedy has been taken of increasing the preliminary portion to such an extent that over two-fifths of the book is devoted to general electrical engineering.

The work commences with an elementary discussion of sound and æther waves, and the theory of electricity and magnetism is introduced immediately by way of the electronic constitution of matter; a point of importance in view of the wide use of thermionic valves at the present time. The laws of electricity and magnetism are then dealt with, and the units involved and the principles of measuring instruments are described. Further chapters deal in a very complete manner with the essential principles of electromagnetic generators of both direct and alternating currents, and a chapter is given on transformers. No mathematical theory is introduced but all the fundamental formulæ for making calculations are given and their use well illustrated by a liberal sprinkling of numerical examples throughout the text.

Turning to the more wireless portion of the book, this deals in a very clear though elementary manner with the generation of electrical oscillations and the radiation of electromagnetic waves for wireless signalling purposes. Without mention of any particular system, it deals with the various methods of generating both damped and undamped oscillations, emphasising the advantage of the latter. For the receiver, the various types of rectifying detectors are described, and the circuit arrangements in which they may best be used. A novel feature of this chapter, at least so far as the writer is aware, is the graphical explanation of the action of a rectifier on a train of damped oscillations, by the method so often adopted for valve circuits.

The valve is introduced from the standpoint from which it first found use in the Navy, viz., as a feeble generator of oscillations for heterodyne reception. The applications as rectifier and amplifier are then described giving the various typical circuit arrangements which may be employed. Finally a chapter is given on a complete modern transmitting valve circuit, illustrating the functions of the various parts of apparatus used. A distinctive feature of these "valve" chapters, is that all explanations are given very clearly by the aid of diagrams which are presumably actual, and not hypothetical, characteristic curves. The co-ordinates of these characteristics are marked off in the correct units, an important feature in conveying an idea of the magnitude of the quantities involved, such as, *e.g.*, the relative strengths of anode and grid currents.

The chapter on radiotelephony is rather short, particularly in view of the probable large development of this branch for short range communication in the naval and air services. A fundamental idea of the propagation of electromagnetic waves and the influence of the earth and the atmosphere is conveyed by a chapter on "The Æther and the Atmosphere." The book concludes with three very good and practical chapters on "Aerials and Earths," "Wavemeters," and "Care and Maintenance of W/T Installations," which should be found particularly useful to the operator in charge of a ship's wireless set. Some notes on mathematics and mechanics for the elementary student, and a number of useful tables and formulæ are given as appendices.

Altogether the book is an excellent description of the principles of wireless telegraphy, presented in a good style with few misprints. The text is liberally interspersed throughout with a large number of extremely clear and accurate diagrams. An improvement in this direction might have been achieved by the introduction of a few photographs of typical apparatus, or at least some more line drawings, such as that of an armature on p. 96, or the receiving valves on p. 292, which serve to give a more concrete idea of the apparatus described.

The chief fault of the book lies with the index, which is neither full enough, nor arranged to the best advantage. The principle adopted here, of giving references to paragraphs instead of to pages is a bad one, particularly when the paragraph numbers in the text are not emphasised by heavy type. As an example of bad indexing, that of paragraph 474 may be noted. This paragraph deals with the radiation of waves and the term wavelength is illustrated by a diagram, the symbol λ, not being mentioned for the first time. The reference to this paragraph, however, is to be found under "Lambda," and not under "Wave," or "Wavelength."

As a service handbook it is notably free from any reference to service apparatus, and descriptions of sets of the "M C 2" variety, with which such handbooks are usually filled. Although it is naturally written for the use of naval ratings, and one or two terms are introduced which are not in general use outside the service, it forms one of the best up-to-date text-books on wireless available at the present time. It can well be recommended to the general student and at the price of publication it is very cheap. It is rather to be regretted that no names are mentioned in the book, as the work undoubtedly reflects great credit upon the author or authors responsible for its production. A last commendable feature of the book is that the symbols used throughout are in accordance with the adoptions of the International Electrotechnical Commission.

R. L. SMITH-ROSE.

HET DRAADLOOS ZENDSTATION VOOR DEN AMATEUR (TELEGRAFIE EN TELEFONIE). By J. Corver. ('s-Gravenhage: *N. Veenstra.* 1920. Pp. 106. 9½″ × 6¼″. Price not stated.)

This book contains a non-mathematical account of the various transmitting systems, old and new, from the point of view of the experimental amateur. Freehand sketches are given showing how the various pieces of apparatus may be constructed. When the use of a few mathematical symbols is unavoidable, as in dealing with the calibration of a wavemeter, the matter is put in small type as an appendix to the chapter.

The first system described is the buzzer transmitter; this is followed by a description of the Ruhmkorff coil and its use first with a plain aerial, and then with a coupled aerial. Wavelength, logarithmic decrement and the effects in coupled oscillatory circuits are described in very simple language, and with the help of mechanical analogies. Fundamental and harmonic oscillations of aerials and solenoids are described and illustrated. Several chapters are then devoted to valve transmitting systems, and the heterodyne wavemeter is also described. Two chapters are devoted to radiotelephony transmitters, and in the concluding chapter the question of earthing is discussed, and also measurements to be made on the antenna, its effective height, radiation resistance, and the efficiency of the antenna as a radiator of energy.

The book will doubtless be of use to Dutch amateurs. The author is a frequent contributor to *Radio Nieuws*, the organ of the wireless amateur movement in Holland.

G. W. O. H.

Book Received.

ELECTRICITY AT HIGH PRESSURES AND FREQUENCIES. By H. L. Transtrom. (Chicago: *The Joseph G. Branch Publishing Co.* Second Edition. 1921. Pp. xi + 247. 7¼″ × 5″. Price $2.50.)

Correspondence.

"THE HETERODYNE METHOD OF WIRELESS RECEPTION, ITS ADVANTAGES, AND ITS FUTURE."

To the Editor of the "Radio Review."

SIR,—In reply to M. Latour's letter and the mistake No. 1 which he states I have made, I will quote one part of my own letter :—

"About the simplest method of modulation is to transmit simultaneously with two wavelengths say from two C.W. stations near to one another. If the wavelengths are separated by a frequency n, then a receiver without a heterodyne at a distance will hear a musical note of frequency n. If one of these stations stops sending Morse and makes a long dash, at the receiving end no difference will be noted as far as the signals are concerned. X's will, however, be slightly altered by the action of the dash from the one transmitter during the spacing intervals. *It can, however, be easily imagined that this dash cannot seriously affect the X, particularly when the signal is weak.* Consequently there is no apparent difference between the two methods of sending.

"Now the receiver could not tell if this dash sent by the one C.W. station were replaced by a heterodyne at the receiving station giving the same current and frequency to the receiving aerial particularly if the heterodyne were arranged to simulate direction as well as strength and frequency. So that obviously the modulation which M. Latour suggests is a property of the transmitting station resolves itself into a clumsy way of heterodyning—without several of the good properties of the heterodyne."

I have marked in italics one particular sentence. I think sufficient justification exists for this sentence as we are hardly discussing the cases of X's and signals when the former are equal to or of less value in instantaneous current than the latter and unless the heterodyne has at least a strength equal to the instantaneous value of the X, the magnification of the X is quite small (see paper by Edwin H. Armstrong presented before the Institute of Radio Engineers, New York, October 4th, 1916), even in the case when a very resonant note amplifier is in use like M. Latour's devices.

Admitted that with the second wave of the transmitter now replaced by the heterodyne, and the latter strengthened up to the optimum value, there is a great strengthening up of X's in the space, *but the signal is at least proportionately strengthened.*

M. Latour's argument that I have made a mistake in case No. 2 also falls to the ground.

Suppose we assume he is receiving his modulated wave made up with two transmitters, transmitting f_1 and f_2, and he is tuned to $\frac{f_1 + f_2}{2}$, what is the decrement of his aerial system? On that will depend the spectrum of the result of his X and his signal acting on one another. (I will leave out the fact that this is not the only action of the X.) He makes a serious mistake in assuming the result of the X is a note of $\frac{f_1 - f_2}{2}$. It is a damped oscillation with a period $\frac{f_1 - f_2}{2}$ which can act on the note circuit tuned to $f_1 - f_2$. The nearer and nearer the X is turned into a pure note $\frac{f_1 - f_2}{2}$ the less will be its action on the circuit tuned to $f_1 - f_2$, but to obtain this result the lower and lower his aerial damping will have to be made, and that means that the mistuning of his aerial system (for his signal is of frequency f_1 and f_2 while his aerial is tuned to $\frac{f_1 + f_2}{2}$) will have more influence on the ratio between the value of the signal received and what could be received if the signal wave and aerial system were in tune.

So that again, although M. Latour has dodged the X at its maximum, he has also obtained proportionately weaker signals.

I think even if M. Latour does not accept this last argument quantitatively, he must admit that by choosing a weak heterodyne of frequency f_2 and retaining all his tunings the same as before, he can produce the same result as if the second transmitter f_2 were in actual use.

H. J. ROUND.

London. *May 17th*, 1921.