THE RADIO CONSTRUCTOR

Vol. 23 No. 1 AUGUST 1969 THREE SHILLINGS

Miniature Oscilloscope

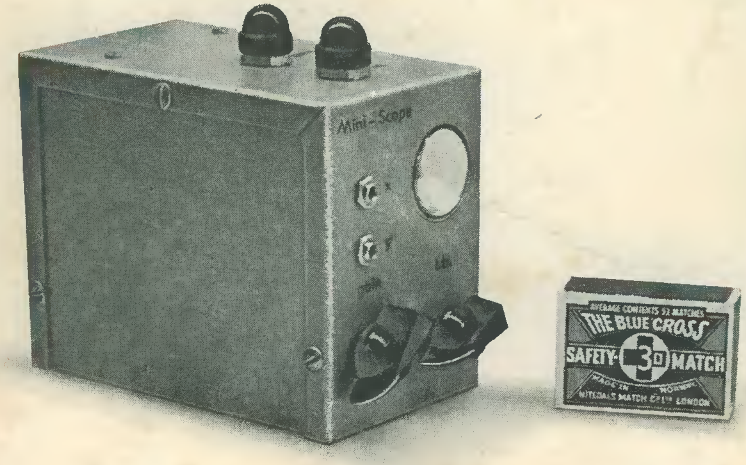

FEATURED IN THIS ISSUE

Inertia Switching Circuit

The "Kangaroo" Radiogram

SPECIAL

R. Constructor Motoring Offer

L.S.T. ELECTRONIC COMPONENTS LTD.

SEMI-CONDUCTORS, BRAND NEW AND FULLY GUARANTEED

1N914	2/–	2N4255	8/6	BCZ11	10/4	OC19	5/–
1S113	3/–	2S018	8/6	BD121	19/6	OC20	33/–
1S120	2/6	2S024	25/–	BD123	23/6	OC22	13/–
1S130	2/6	2S034	15/–	BD124	17/–	OC23	15/–
1S131	2/6	AC107	14/6	BF152	13/6	OC24	10/–
1S132	2/6	AC126	6/6	BF167	6/6	OC25	6/8
2G301	4/–	AC127	6/–	BF173	7/6	OC26	12/–
2G302	3/9	AC128	4/–	BF181	7/6	OC28	12/–
2G339A	5/–	AC176	7/6	BF184	7/6	OC29	15/–
2G374	5/–	AC187	12/–	BFW57	7/6	OC30	7/–
2G381	5/–	AC188	12/–	BFW58	7/6	OC35	9/6
2G371	3/–	ACY17	5/8	BFW59	6/6	OC36	13/–
2N385A	15/–	ACY18	3/4	BFW60	6/6	OC41	3/6
2N388A	15/–	ACY19	4/4	BFX13	4/8	OC42	4/–
2N696	6/–	ACY20	3/8	BFX29	8/5	OC44	3/–
2N697	6/–	ACY21	4/–	BFY50	6/–	OC45	3/–
2N698	4/6	ACY22	2/4	BFY51	6/–	OC71	3/–
2N706	3/–	AD140	15/–	BFY52	6/–	OC72	4/6
2N706A	6/6	AD149	11/8	BFY53	6/–	OC73	3/–
2N708	4/–	AD161	6/–	BSX20	3/3	OC75	5/–
2N711	7/6	AD162	6/–	BSX21	8/–	OC76	2/6
2N711A	7/6	ADT140	12/6	BSY27	4/–	OC77	8/8
2N929	5/6	AF102	18/–	BTX39/600	120/-	OC810	3/–
2N930	6/6	AF114	4/4	BUY11	15/–	OC82	4/6
2N1131	9/6	AF115	4/4	BSY95A	3/4	OC82D	3/–
2N1132	7/6	AF116	4/4	BY100	5/–	OC83	4/–
2N1302	4/6	AF117	4/4	BYX10	4/9	OC84	4/–
2N1303	4/6	AF118	16/6	BYZ10	9/–	OC123	7/–
2N1304	5/–	AF124	6/–	BYZ12	6/–	OC139	8/–
2N1305	5/–	AF127	4/–	BYZ13	5/–	OC140	12/–
2N1306	6/6	AF139	15/–	GET102	6/–	OC169	6/–
2N1307	6/6	AF186	11/–	GET103	4/6	OC170	4/–
2N1308	8/–	AF239	12/–	GET113	5/–	OC171	6/–
2N1309	8/–	AFZ12	11/9	GET573	7/6	OC200	6/–
2N1613	6/6	ASY26	5/8	GMO290	10/–	OC201	10/–
2N2147	17/–	ASY27	5/8	GMO378B	6/–	OC202	16/6
2N2148	12/6	ASY28	4/4	MAT120	5/–	OC203	8/–
2N2160	14/–	ASY29	4/4	MAT121	5/6	OC204	8/–
2N2368	6/6	ASZ21	11/–	MPF102	9/–	OC205	9/–
2N2369	5/6	AUY10	39/6	MPF103	9/–	OC206	10/6
2N2369A	7/6	BA115	2/8	MPF104	9/–	OC207	7/6
2N2646	10/–	BA130	3/–	MPF105	9/–	ORP60	8/–
2N2696	6/6	BAY31	2/6	NKT216	10/5	ORP61	8/–
2N2924	5/–	BAY38	3/–	NKT217	10/5	ORP63	9/–
2N2925	5/6	BC107	2/9	NKT261	4/3	SX631	7/4
2N2926:–		BC108	2/9	NKT262	4/3	SX636	10/8
Green	2/–	BC109	2/9	NKT264	4/3	SX638	12/–
Yellow	2/–	BC113	5/–	NKT271	4/3	SZ20C	15/–
Orange	2/–	BC114	18/–	NKT272	4/3	SCC1	17/4
Red	2/–	BC115	13/6	NKT274	4/3	C426	8/3
2N3053	8/–	BC118	5/–	NKT275	3/6	P346A	6/–
2N3054	15/–	BC125	14/–	NKT276	2/6	V405A	9/3
2N3055	15/–	BC126	14/–	NKT281	5/6	EC401	5/–
2N3702	4/–	BC134	5/–	NKT403	15/–	EC402	4/8
2N3703	4/–	BC147	6/–	NKT405	15/–	C111E	18/–
2N3704	4/6	BC148	4/–	NKT713	5/6	C400	9/–
2N3705	4/–	BC149	6/–	NKT773	5/4	2C111	45/9
2N3706	3/–	BC154	12/–	NKT774	5/4	2C425	32/–
2N3707	4/–	BCY30	7/–	OA5	3/8	EA403	3/6
2N3708	3/–	BCY31	9/–	OA47	1/6	EB383	3/6
2N3709	3/–	BCY32	16/–	OA70	1/6	MJ491	30/3
2N3710	4/–	BCY33	4/8	OA73	1/6	MJ481	27/–
2N3711	4/–	BCY34	6/4	OA79	1/6	40361	13/3
2N3819	8/–	BCY38	8/–	OA81	1/6	40362	16/3
2N3820	23/6	BCY39	27/4	OA85	1/6	OAZ241	3/6
2N4058	7/–	BCY40	13/4	OA90	1/6	OAZ242	3/6
2N4059	6/–	BCY54	15/3	OA91	1/6	OAZ269	3/6
2N4060	6/–	BCY70	4/4	OA95	1/6	OAZ270	3/6
2N4061	6/–	BCY71	8/8	OA200	2/–	OCP71	18/3
2N4062	6/–	BCY72	6/6	OA202	2/–	ST140	3/–
2N4254	9/6	BCY87	86/9	OA210	6/4	ST141	5/–

BC107/8/9 NPN **2/9**

2N3819 TEXAS FET **8/-**

2N2646 UNI-JUNCTION **10/-**

2N4871 UNIJUNCTION
SIMILAR 2N2646
BEN 3000, ETC.
25+ 5/3 100+ 4/9 **6/9**

CRS3/40AF STC 400V 3A SCR **12/6**

TD716 TUNNEL DIODE **12/-**

D13T1 PROGRAMMABLE UNIJUNCTION TRANSISTOR **10/-**

2N3055 115 WATT
POWER SILICON NPN
25+ 13/– 100+ 11/– **15/-**

2N2926 POPULAR PLANAR NPN **2/-**

BF180 **6/-**
MULLARD UHF AMPLIFIER

FAIRCHILD μ LOGIC

	1–6	7–11	12+
uL900	11/–	9/6	8/4
uL914	11/–	9/6	8/4
uL923	14/–	12/6	11/9

Five Page Data and Circuits article 2/6

Larger quantity prices (100+ and 1,000+) on application.

LINEAR AMP. IC'S

CA3020 ½ Watt output 9 volt supply . . . . . . 30/6 (Price includes free circuit for Guitar/PA Amplifier ! !)

TAA263 Tiny Mullard linear only **17/6** – data on request.

CA3012 Wide band with built-in regulation . **27/6**

CA3014 3 stage amp. with Darlington output . . **32/6**

SL701 Plessey lin. amp. for PE circuits **18/–**

ULTRASONIC TRANSDUCERS

Operate at 40kc/s. Can be used for remote control systems without cables or electronic links. Type 1404 transducers can transmit and receive.

FREE: With each pair our complete transmitter and receiver circuit.

PRICE **£5.18.0** Pair
(Sold only in pairs)

CHEAPEST EVER SOLID-STATE SALE

BEST VALUE IN BRITAIN

40	Silicon Planar Transistors. TO-18 case. NPN & PNP mixed. Similar V405A, P346A, etc. Not tested or coded. Guaranteed minimum 50% good	10/–
40	Silicon Planar Transistors. TO-18 case. NPN type similar 2N706, BSY95A, etc. Not tested or coded. Guaranteed minimum 50% good	10/-
10	PNP Silicon Planars. Similar BSX40/2N2904/A. 3 Watts. 100 Mc/s. Fully tested. Uncoded	10/–
30	Silicon Planar Transistors. TO-18 case. NPN type similar BC107/8/9 range. Not tested or coded. Guaranteed minimum 50% good	10/–
3	Silicon Power Transistors similar to BUY11. TO-3 case. Not tested or coded. Gold plated cases	10/–
20	Germanium Transistors 2G371B. Case SO-2. Fully tested to makers' specifications PNP. Equal to OC71 range. Not coded	10/–
25	Silicon NPN VHF Transistors. TO-18 case. Similar to BSY27, etc. Not tested or coded	10/–
20	Silicon Planar Transistors. Plastic type. NPN. Similar to 2N3705/7 range. Not tested or coded. Guaranteed minimum 50% good	10/–
20	Silicon Planar Transistors. Plastic type. PNP. Similar to 2N3702. Not tested or coded. Guaranteed minimum 50% good	10/–
16	Silicon Rectifiers. Top-Hat case. 750mA + @ 100 — 1000 piv. Guaranteed minimum 80% good	10/–
12	Silicon Avalanche Rectifiers. Top-Hat case. 1½ Amp @ up to 1200 piv. Guaranteed minimum 80% good	10/–
15	Silicon Epitaxial Planar Diodes—Sub-miniature. Type SD19 Plessey. Exact substitute for 1N914, etc. 100% perfect. Not coded	10/–
30	Part made Top-Hat Rectifiers (top connection broken, but plenty room to solder) 750mA up to 800 piv. Guaranteed minimum 80% good	10/–

2G371B and SD19 are Manufacturers' tested devices.
Other un-coded stock are given type numbers as a guide only.
Money refunded if not satisfied.
All above packs post free in UK.
EXPORT SPECIAL: 10% of the above SALE goods are reserved for export until August 1969.

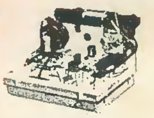

S·DeCs

Single "DeC" with accessories and project manual ... **29/6**

"2-DeC" kit contains two "DeCs" component tray, accessories, instruction book, all packed in attractive plastic box **69/6**

"4-DeC" kit contains four "DeCs", accessories, manual, etc. ... **117/6**

BOOKS FROM STOCK

General Electric Transistor Manual, 660 pages of data & circuits	29/6
RCA Transistor Manual, 554 pages, includes SCR circuits ...	28/–
Designers' Guide to British Transistors. Excellent data book lists over 1,000 common types plus Computer-selected substitution chart	25/–

(ADD 2/6 POST & PACKING FOR ALL BOOKS)

NEONS

Signal neons for many types of circuit, type "N".
Price 1/6 each or 16/– dozen.

HEATSINKS. Suitable for 2 x OC35, etc. As used in commercial equipment. Type 10D ... ... 6/–.

ALUMINIUM CHASSIS

6 x 4 x 2½" with reinforced corners **6/9** each (P & P. 1/6). Ally panel to fit **1/6.** Paxolin panel to fit **2/–.** Many other sizes in stock up to 12 x 8 x 2½" (see catalogue).

X·LINE

MODULES YOU CAN OPEN!

X-161	2 Watt Amplifier	35/-
X-461	Siren	35/-
X-471	Burglar Alarm	35/-
X-661	Metronome	30/-
X-761	Morse Oscillator	20/-
X-691	Lamp Flasher (Double)	30/-

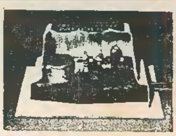

Generous discounts to retailers given on all 'X'-Line products. Send for details now.

SILICON RECTIFIERS

PIV	200mA	750mA	2 Amp	10 Amp
50	6d	1/–	2/3	—
100	9d	1/6	2/3	4/6
200	1/3	2/–	2/9	5/–
400	2/–	2/6	4/–	8/–
600	—	3/–	4/6	9/6
800	3/–	3/9	5/–	11/3
1000	—	6/–	6/6	14/–

THYRISTORS - SCRs

PIV	1A	3A	10A	30A	100A
50	7/6	9/–	7/6	—	20/–
100	—	10/–	10/–	—	22/–
200	8/6	—	12/6	42/–	35/–
300	—	11/–	—	—	—
400	9/6	12/6	15/–	60/–	45/–
600	—	—	20/–	84/–	120/–
800	—	—	—	—	—

ZENER DIODES

¼ Watt 10% Tolerance—
Voltages:

3·0	4·7	7·5	12	ALL
3·3	5·1	8·2	13	ONE
3·6	5·6	9·1	15	PRICE:
3·9	6·2	10	16	3/6
4·3	6·8	11		each

See IR Panel for 1 Watt types.
Full range 5 Watt also in stock.

IOR

SOLAR CELLS

B2M	0·2–0·4 volts @ 2mA Selenium type	12/6
B3M	0·2–0·4 volts @ 1½–2½mA Selenium type	15/–
S1M	0·3–0·4 volts @ 10–16mA Silicon	19/–
S4M	0·3–0·4 volts @ 25–40mA Silicon	33/6

SOLAR DRIVE MOTOR

EP50A Runs from sunlight activity on S4M cells (above) 39/6

PHOTOCONDUCTIVE CELL

CS120 20v 0·4 Watts Dark Res 110k ohms Min. R @ 10FC = 7·2k R @ 100 FC = 800 ohms 19/8

SOLAR CELL KITS

DD190	Contains 4 Selenium photocells and free 24-page handbook	9/11
K-421	Super assortment of 7 cells, 3 Selenium, 2 Silicon and 2 Sulphide, plus 24-page manual	58/6

TRANSISTOR KITS

DD180	Contains 2 Audio and 1 RF Transistor plus free manual	11/4
DD184	Contains Audio, RF, and Power transistors, Silicon solar cell and germanium diode. With FREE manual	33/6

SILICON RECTIFIER KITS

DD175	Contains 4 100 piv ½ amp diodes	9/11
DD176	Contains 2 200 piv ½ amp diodes	5/11
DD177	Contains 2 400 piv ½ amp diodes	9/11

ALL INCLUDE FREE 24 PAGE MANUAL

ZENER DIODES

Available in the following voltages with a dissipation of 1 watt and tolerance on 10%. All supplied with free manual describing many interesting projects
3·9v, 4·7v, 5·6v, 6·8v, 8·2v, 10v, 12v, 15v, 18v, 22v, 27v
ALL ONE PRICE 7/11

ZENER KIT

DD170 Bargain pack—contains 5 popular 1 Watt diodes plus free project manual 19/6

TRANSISTOR SUBSTITUTION

Our TR01-C to TR10-C range are universal replacements for over 700 JEDEC (2N———) types. Prices in our FREE Catalogue.

FULL SEMICONDUCTOR CENTRE LISTINGS.

DOZENS OF INTERESTING DEVICES IN OUR CATALOGUE.

COMPONENTS

RESISTORS ¼ or ½ Watt 5% LOW NOISE CARBON FILM 10, 12, 15, 18, 22, 27, 33, 39, 47, 56, 68, 82 ohms and decades (x10, x100, x1,000, x10,000) 1 Meg etc. to 8·2 Megohms (10% tolerance). PRICES: 1–25 **4d,** 26–99 **3d,** 100+ **2d** (your selection ½ and/or ¼ Watt mixed).

SKELETON PRESET POTS. 20% Tol. Linear. Low noise. Available in sub-miniature or standard size, horizontal or vertical. 100, 250, 500, 1k, 2·5k, 5k, 10k, 25k, 50k, 100k, 250k, 500k, 1 Meg, 2·5 Meg, 5 Meg. NEW PRICE: **1/–** each or any selection of 12 pieces **10/–.**

ELECTROLYTIC CAPACITORS (Mullard). −10% to +50% tol.
Subminiature (all values in μF)

4V	8	32	64	125	250	400
6·4V	6·4	25	50	100	200	320
10V	4	16	32	64	125	200
16V	2·5	10	20	40	80	125
25V	1·6	6·4	12·5	25	50	80
40V	1	4	8	16	32	50
64V	0·64	2·5	5	10	20	32
Price	1/6	1/3	1/2	1/–	1/1	1/2

MIN. POLYESTER CAPACITORS. Printed circuit type 250 Vdc working. 0·01, 0·015, 0·022, 7d each; 0·033, 0·047, **8d** each; 0·068, 0·10, 9d each.

VEROBOARD 0·15" Matrix FLUX COATED
2½ x 3¾", 3/3. 2½ x 5", 3¾ x 3¾", 3/11. 3¾ x 5", 5/6. 3¾ x 18", 18/–. BARGAIN PACK of 36 square inches all good size pieces only **10/–** pack.

VEROBOARD 0·1" Matrix, 3¾ x 2½", 3/9.

VEROPINS for 0·15", 36 pieces 3/–.

VERO-CUTTER, 9/– each plus FREE SAMPLE PIECES.

LST. **7 COPTFOLD ROAD**
BRENTWOOD
ESSEX

Telephone: **BRENTWOOD 226470/1**

Prices quoted are current at time of going to press and may be subject to variation. Semiconductors offered bear Manufacturers' original markings and are subject to our full replacement guarantee if not to published specifications. We DO NOT offer "Re-marked" semiconductors. Catalogue (1969) shortly available. Post & Packing (First class) 1/- per order. Retail and Trade supplied. Export enquiries particularly welcome.

Giro No. 388–3159.

VALUE ALL THE WAY

INTEGRATED CIRCUITS

BI-PAK MONOLITHIC DIGITAL CIRCUITS (10 lead TO-5)

BP305A, 6-Input AND gate, **9/6** each.
BP314A, 7-Input NOR gate, **9/6** each.
BP315A, Dual 3-Input NOR gate, **9/6** each.
BP316A, Dual 2-Input NOR gate (expandable), **9/6** each.
BP320A, J-K-Binary element, **11/6** each.
BP332A, Dual 3-Input OR gate, **9/6** each.

BI-PAK MONOLITHIC AMPLIFIERS (TO-5 8 lead)

BP709C, Operational amplifier, **15/–** each.
BP701C, Operational amplifier (with Zener output), **12/6** each.
BP702C, Operational amplifier (with direct output), **12/6** each.
BP501, Wide band amplifier, **18/–** each.
BP521, Logarithmic wide band amp., **14/–** each.
BP210C, General purpose amplifier (TO-5 8 lead), (voltage or current amp.), **12/6** each.

I.C. Operational Amplifier with Zener output. **Type 701C.** Ideal for P.E. Projects. 8 Lead TO-5 case. Full data.

Our price 12/6 each

5 off 11/- each. Large Qty. Prices quoted for.

OTHER MONOLITHIC DEVICES

BP424, Zero voltage switch, **8/6** each.

This device is a monolithic I.C. that acts as combined threshold detector and trigger circuit for controlling a triac. It is designed to pulse the gate of a thyristor at the point of zero supply voltage, and therefore eliminate radio frequency interference when used with resistive loads.

D13D1 Silicon Unilateral switch **10/–** each.

A Silicon Planar, monolithic integral circuit having thyristor electrical characteristics, but with an anode gate and a built-in "Zener" diode between gate and cathode. Full data and application circuits available on request.

FAIRCHILD (U.S.A.) RTUL MICROLOGIC INTEGRATED CIRCUITS

Epoxy case T8-5 lead temp. range 15°C. to 55°C. UL900, Buffer, **10/6** each.
UL914, Dual two-input gate, **10/6** each.
UL923 J-K-flip-flop, **14/–** each.

Complete data and circuits for the Fairchild I.C.'s available in booklet form priced **1/6**.

MULLARD I.C. AMPLIFIERS

TA A243, Operational amplifier, **70/–** each.
TA A263, Linear AF amplifier, **18/6** each.
TA A293, General purpose amplifier, **21/–** each.

CA3020 RCA (U.S.A.) LINEAR INTEGRATED CIRCUITS

Audio Power Amplifier, **30/–** each.

Owing to the mass of I.C. printed matter often required by customers in connection with the I.C.'s themselves we ask you to help us in the cost of reproducing this literature by adding 2s. towards same. This is only necessary when a number of different sheets are required.

Sil. trans. suitable for P.E. Organ. Metal TO-18 Eqvt. ZTX300 1/– each. Any Qty.

AD161 *NPN*
AD162 *PNP*

MATCHED COMPLEMENTARY PAIRS OF GERM. POWER TRANSISTORS.
For mains driven output stages of Amplifiers and Radio receivers.
OUR LOWEST PRICE OF **12/6** *PER PAIR.*

HIGH POWER SILICON PLANAR TRANSISTORS.
TEXAS 2S034 NPN TO-3.

VCB100	Ic 4A fT. 15M/cs
VCE100	Ptot. 40W
VEB8	hFE(min.) 60

Price 15/– each

FREE
One 10/– Pack of your own choice free with orders valued £4 or over.

SEMICONDUCTOR HANDBOOK (VOLUME 2)

With introduction to basic circuits, registered transistor and diode types, full specifications. Eleven languages including English, Dutch, French, German, Swedish, Spanish and Italian. 240 pages of semiconductor information.
Price **28/6**. Money refunded if not fully satisfied.

NPN DIFFUSED SILICON PHOTO-DUO-DIODE TYPE 1S701 (2N2175) for Tape Readout, high switching and measurement indicators, 50V, 250mW. OUR PRICE **10/-** EACH, 50 OR OVER **8/6**. EACH. FULL DETAILS.

KING OF THE PAKS **Unequalled Value and Quality**

SUPER PAKS NEW BI-PAK UNTESTED SEMICONDUCTORS

Satisfaction GUARANTEED in Every Pak, or money back.

Pak No.		
U1	120 Glass Sub-min. General Purpose Germanium Diodes	10/–
U2	60 Mixed Germanium Transistors AF/RF	10/–
U3	75 Germanium Gold Bonded Diodes sim. OA5, OA47	10/–
U4	40 Germanium Transistors like OC81, AC128	10/–
U5	60 200mA Sub-min. Sil. Diodes	10/–
U6	40 Silicon Planar Transistors NPN sim. BSY95A, 2N706	10/–
U7	16 Silicon Rectifiers Top-Hat 750mA up to 1,000V	10/–
U8	50 Sil. Planar Diodes 250mA OA/200/202	10/–
U9	20 Mixed Volts 1 watt Zener Diodes	10/–
U11	30 PNP Silicon Planar Transistors TO-5 sim. 2N1132	10/–
U12	12 Silicon Rectifiers EPOXY BY126/127	10/–
U13	30 PNP-NPN Sil. Transistors OC200 & 2S104	10/–
U14	150 Mixed Silicon and Germanium Diodes	10/–
U15	30 NPN Silicon Planar Transistors TO-5 sim. 2N697	10/–
U16	10 3-Amp Silicon Rectifiers Stud Type up to 1000 PIV	10/–
U17	30 Germanium PNP AF Transistors TO-5 like ACY 17-22	10/–
U18	8 6-Amp Silicon Rectifiers BYZ13 Type up to 600 PIV	10/–
U19	30 Silicon NPN Transistors like BC108	10/–
U20	12 1·5-amp Silicon Rectifiers Top-Hat up to 1,000 PIV	10/–
U21	30 A.F. Germanium alloy Transistors 2G300 Series & OC71	10/–
U22	10 1-amp Glass Min. Silicon Rectifiers High Volts	10/–
U23	30 Madt's like MAT Series PNP Transistors	10/–
U24	20 Germanium 1-amp Rectifiers GJM up to 300 PIV	10/–
U25	25 300 Mc/s NPN Silicon Transistors 2N708, BSY27	10/–
U26	30 Fast Switching Silicon Diodes like IN914 Micro-min	10/–
U28	Experimenters' Assortment of Integrated Circuits, untested. Gates, Flip-Flops, Registers, etc., 8 Assorted Pieces	20/–
U29	10 1 amp SCR's TO-5 can up to 600 PIV CRS1/25-600	20/–
U30	15 Plastic Silicon Planar trans. NPN 2N2924-2N2926	10/–
U31	20 Sil. Planar NPN trans. low noise Amp 2N3707	10/–
U32	25 Zener diodes 400mW D07 case mixed Volts, 3-18	10/–
U33	15 Plastic case 1-amp Silicon Rectifiers IN-4000 series	10/–
U34	30 Sil. PNP alloy trans. TO-5 BCY26, 2S302/4	10/–
U35	25 Sil. Planar trans. PNP TO-18 2N2906	10/–
U36	25 Sil. Planar NPN trans. TO-5 BFY50/51/52	10/–
U37	30 Sil. alloy trans. SO-2 PNP, OC200 2S322	10/–
U38	20 Fast Switching Sil. trans. NPN 400Mc/s 2N3011	10/–
U39	30 RF Germ. PNP trans. 2N1303/5 TO-5	10/–
U40	10 Dual trans. 6 lead TO-5 2N2060	10/–
U41	30 RF Germ. trans. TO-1 OC45 NKT72	10/–
U42	10 VHF Germ. PNP trans. TO-1 NKT667 AF117	10/–

Code Nos. mentioned above are given as a guide to the type of device in the Pak. The devices themselves are normally unmarked.

QUALITY-TESTED PAKS

6	Matched Trans. OC44/45/81/81D	10/–
20	Red Spot AF Trans. PNP	10/–
16	White Spot RF Trans. PNP	10/–
5	Silicon Rects. 3 A 100-400 PIV	10/–
2	10 A Silicon Rects. 100 PIV	10/–
2	OC1 140 Trans. NPN Switching	10/–
1	12 A SCR 100 PIV	10/–
3	Sil. Trans. 2S303 PNP	10/–
4	Zener Diodes 240mW 3-12V	10/–
3	200 Mc/s Sil. Trans. NPN BSY26/27	10/–
3	Zener Diodes 1W 33V 5% Tol.	10/–
4	High Current Trans. OC42 Eqvt.	10/–
2	Power Transistors 1 OC26 1 OC35	10/–
5	Silicon Rects., 400 PIV 250mA	10/–
4	OC75 Transistors	10/–
1	Power Trans. OC20 100V	10/–
10	OA202 Sil. Diodes Sub-min.	10/–
2	Low Noise Trans. NPN 2N929/30	10/–
1	Sil. Trans. NPN VCB 100 ZT86	10/–
8	OA81 Diodes	10/–
4	OC72 Transistors	10/–
4	OC77 Transistors	10/–
4	Sil. Rects. 400 PIV 500mA	10/–
5	GET884 Trans. Eqvt. OC44	10/–
5	GET883 Trans. Eqvt. OC45	10/–
2	2N708 Sil. Trans. 300Mc/s NPN	10/–
3	GT31 LF Low Noise Germ Trans.	10/–
6	IN914 Sil. Diodes 75 PIV 75mA	10/–
8	OA95 Germ. Diodes Sub-min. IN69	10/–
3	NPN Germ. Trans. NKT773 Eqvt.	10/–
2	OC22 Power Trans. Germ.	10/–
2	OC25 Power Trans. Germ.	10/–
4	AC128 Trans. PNP High Gain	10/–
4	AC127/128 Comp. pair PNP/NPN	10/–
3	2N1307 PNP Switching Trans.	10/–
7	CG62H Germ. Diodes Eqvt. OA71	10/–
3	AF116 Type Trans.	10/–
12	Assorted Germ. Diodes Marked	10/–
4	AC126 Germ. PNP Trans.	10/–
4	Silicon Rects. 100 PIV 750mA	10/–
3	AF117 Trans.	10/–
7	OC81 Type Trans.	10/–
3	OC171 Trans.	10/–
5	2N2926 Sil. Epoxy Trans.	10/–
7	OC71 Type Trans.	10/–
2	2S701 Sil. Trans. Texas	10/–
3	12 Volt Zener 400mW	10/–
2	10 A 600 PIV Sil. Rects. 1S45R	10/–
3	BC108 Sil. NPN High Gain Trans.	10/–
1	2N910 NPN Sil. Trans. VCB 100	10/–
2	1000 PIV Sil. Rect. 1·5 A R53310 AF	10/–
3	BSY95A Sil. Trans. NPN 200Mc/s.	10/–
3	OC200 Sil. Trans.	10/–
2	GET880 Low Noise Germ. Trans.	10/–
1	AF139 PNP High Freq. Trans.	10/–
3	NPN Trans. 1 ST141 & 2 ST140	10/–
4	Madt's 2 MAT100 & 2 MAT120	10/–
3	Madt's 2 MAT101 & 1 MAT121	10/–
4	OC44 Germ. Trans. AF	10/–
3	AC127 NPN Germ. Trans.	10/–
1	2N3906 Sil. PNP Trans. Motorola	10/–
2	Sil. Power Rects. BYZ13	15/–
1	Sil. Power Trans. NPN 100Mc/s. TK201A	15/–
6	Zener Diodes 3-15V Sub-min.	15/–
1	2N1132 PNP Epitaxial Planar Sil.	15/–
3	2N697 Epitaxial Planar Trans. Sil.	15/–
4	Germ. Power Trans. Eqvt. OC16	15/–
1	Unijunction Trans. 2N2646	15/–
2	Sil. Trans. 200Mc/s 60Vcb ZT83/84	15/–
1	Tunnel Diode AEY11 1050 Mc/s	15/–
2	2N2712 Sil. Epoxy Planar HFE225	15/–
8	BY100 Type Sil. Rects.	20/–
25	Sil. and Germ. Trans. Mixed, all marked, New	30/–

SIL. G.P. DIODES

300mW	30	10/–
25PIV (Min.)	100	25/–
Sub-Min.	500	£5
Fully Tested	1,000	£9

Ideal for Organ Builders.

CADMIUM CELLS

ORP60 ORP61 **8/–** each
ORP12 **8/6**

FULL RANGE OF ZENER DIODES VOLTAGE RANGE 2-16V.

400mW (DO-7 Case) . **2/6** each
1-5W (Top-Hat) ..... **3/6** each
10W (SO-10 Stud) ....**5/–** each
All fully tested 5% tol. and marked state voltage required.

TRANSISTOR EQVT. BOOK

52 pages of cross references for trans. and diodes, types include British, European, American and Japanese. Specially imported by BI-PAK .... 10/– each

BRAND NEW TEXAS GERM. TRANSISTORS

Coded and Guaranteed

Pak No.		EQVT.	
T1	8 2G3710	OC71	10/–
T2	8 2G374	OC75	10/–
T3	8 2G3744A	OC81D	10/–
T4	8 2G381A	OC81	10/–
T5	8 2G382T	OC82	10/–
T6	8 2G344A	OC44	10/–
T7	8 2G345A	OC45	10/–
T8	8 2G378	OC78	10/–
T9	8 2G399A	2N1302	10/–
T10	8 2G417	AF117	10/–

PRINTED CIRCUITS

EX-COMPUTER

Packed with semiconductors and components, 10 boards give a guaranteed 30 trans. and 30 diodes. Our price 10 boards **10/–**. Plus 2/- P. & P.

GERM. RECTIFIER SINGLE-PHASE BRIDGE. Mullard type. GEX541-B.P. Output Vlts. 48V. Output I.C. 5A. List Price 58/-. OUR PRICE **12/6** EACH.

2N2060 NPN SIL. DUAL TRANS. CODE D1699 TEXAS. OUR PRICE **5/–** each.

---

120 VCB NIXIE DRIVER TRANSISTOR Sim. BSX21 & C407. 2N1893 FULLY TESTED AND CODED ND120. 1-24 **3/6** each. TO-5 NPN 25 up **3/–** each.

PLEASE NOTE. To avoid any further Increased Postal Charges to our Customers and enable us to keep our "By Return Postal service" which is second to none, we have re-organized and streamlined our Despatch Order Department and we now request you to send all your orders together with your remittance, direct to our Warehouse and Despatch Department, postal address: **BI-PAK SEMICONDUCTORS, Despatch Dept., P.O.BOX 6, WARE, HERTS.** Postage and packing still 1/- per order. Minimum order 10/-.

FET'S

2N 3819.....10/–
2N 3820.....25/–
MPF105 ..... 8/–

OCP71 Type. 8/6

UNIJUNCTION

UT46. Eqvt. 2N2646, Eqvt. TIS43. BEN3000

7/6 EACH

25-99 5/– 100 UP 4/–

TESTED SCR'S

PIV	1A	7A	16A	30A
25		7/6		30/–
50	7/6	8/6	10/6	35/–
100	8/6	10/–	15/–	45/–
200	12/6	15/–	20/–	55/–
300	15/–	20/–	25/–	
400	17/6	25/–	35/–	80/–
500	30/–	40/–	45/–	95/–
600		40/–	50/–	

SIL. RECTS. TESTED

PIV	750mA	3A	10A	30A
50	1/–	2/9	4/3	9/6
100	1/3	3/3	4/6	15/–
200	1/9	4/–	4/9	20/–
300	2/3	4/6	6/6	22/–
400	2/6	5/6	7/6	25/–
500	3/–	6/–	8/6	30/–
600	3/3	6/9	9/–	37/–
800	3/6	7/6	11/–	40/–
1000	5/–	9/3	12/6	50/–
1200	6/6	11/6	15/–	

500, Chesham House,
150 Regent Street,
LONDON, W.1.

KING OF THE PAKS BI-PAK GUARANTEE SATISFACTION OR MONEY BACK

build the

RM 'SINGLET'

SUPERHET RECEIVER

for RADIO CONTROL!

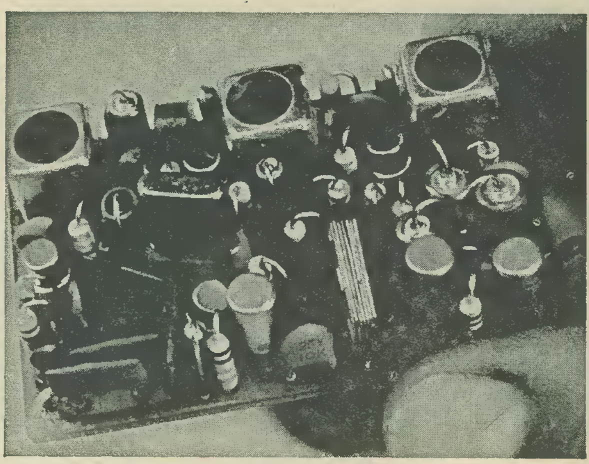

SPECIAL OFFER: Two issues of "RADIO MODELLER"
containing fully illustrated constructional features
both for ONLY 5/– (normally 3/6 each)
Also available: reprints of suitable transmitter – 1/- extra
Send P.O. to: **"RADIO MODELLER" (Dept. SO),**
64 WELLINGTON ROAD, HAMPTON HILL, MIDDLESEX

A LONG COOL LIFE

for your valuable components with the S.D.C. DeC range of SOLDERLESS breadboards

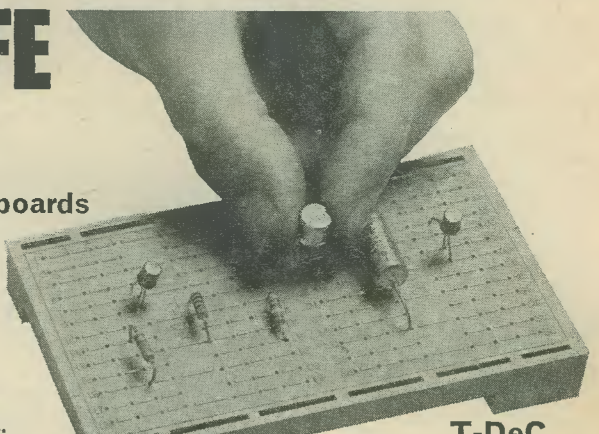

T-DeC

S-DeC Available as single packs with accessories and control panel @ 29/6d or the DeCSTOR double pack containing 2 S-DeCs, accessories, control panel, all in a plastic storage container. Only 67/6d. A 4 DeC pack is available, only 117/6d.

T-DeC Now available to the amateur. 208 connection points. 38 independent junctions. Accommodates I.Cs using standard carriers. Three times the capability for only twice the price! Unit pack with control panel 50/-d.

μ-DeC Primarily for use with integrated circuits; further details on request.

T-DeCs, S-DeCs and Accessories are all obtainable from leading suppliers throughout the U.K. In case of difficulty complete the coupon and mail without delay. *Post to:*

S.D.C. Electronics (Sales) Ltd.,
34, Arkwright, Astmoor Industrial Estate,
Runcorn, Cheshire. Tel: Runcorn 5041

Please send me:
..........................T-DeC Pack ....S-DeC Single Pack
..........................DeCSTOR Pack ....4-DeC Pack
Tick here if you require further details of the μ-DeC
I enclose PO/Cheque/Money Order value £ / / d.
Money refunded if not satisfied.
Name..........................
Address..........................

BARGAIN OFFERS!

EXCLUSIVE MOTORING ACCESSORIES

FOR OUR READERS

★ ROOF RACK

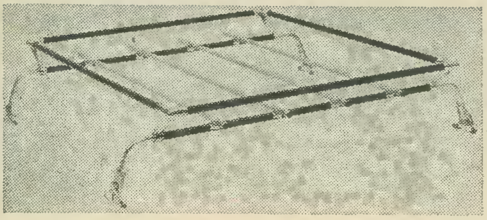

The Classic – a really new and handsomely designed roof rack. Made with high quality steel tubing and alloy castings. A fully collapsible model requiring only four bolts and four wing nuts supplied for its complete and rapid assembly. The framework is covered with a durable P.V.C. and the rack stands on the very latest type of gutter mountings. These mountings have very wide feet for maximum stability and are fixed to the car roof gutters via isolating polythene sleeves to prevent rusting. Carrying platform of 40" x 34" wide. List Price 99/6. **OUR PRICE 65/–** plus carriage 8/6

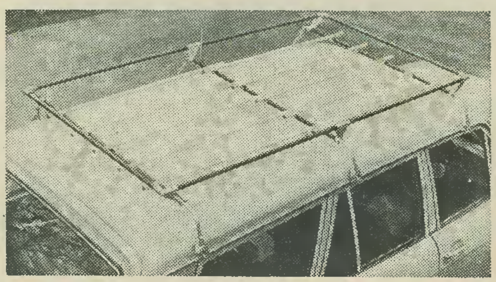

★ ESTATE CAR CONVERSION KIT

This converts the saloon kit into an estate car kit. Carrying platform becomes 75" x 34" wide.

List Price 99/6. **OUR PRICE 65/–** plus carriage 8/6

If roof rack and conversion kit ordered together – carriage free

★ HEAD REST

For comfort and safety! Latest Finnish design. Suitable for all types of seating. Upholstered in first quality foam and covered in extremely durable P.V.C. Fully and easily adjustable for the widest range of height and angle. Available in black or red. List Price 59/6 **OUR PRICE 39/6** plus p. & p. 6/–

★ MASERATI AIR HORNS

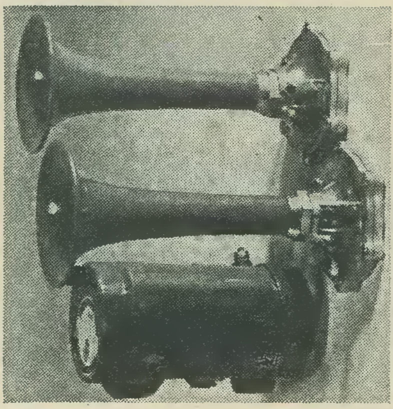

TS Sprint. Ideal for Motorway or Continental driving. Will fit under the bonnet of any car. Available in 6, 12 or 24 volts. This unit incorporates a new extra powerful compressor, which is only available with Maserati Air Horns. Extra tough red plastic trumpets, both 6⅛" long, base diameter of each 3". Compressor height 4½", diameter 2¼". Total weight, including box, 4¼ lbs. Complete with relay, tubing, securing nuts and bolts and fixing instructions. List Price 5 gns. **OUR PRICE 69/6** plus p. & p. 6/–

The above car accessories are first grade, high quality, and are covered by a SEVEN-DAY MONEY BACK GUARANTEE

Please send the following:—
(Please tick where applicable)

☐ Classic Roof Rack ☐ Head Rest
☐ Estate Car Conversion Kit ☐ Maserati Air Horns Please state voltage required ....

I enclose cheque/crossed postal order for................................

Please make remittances payable to our distributors

IVORYET LTD. **and send to:**

RADIO CONSTRUCTOR SPECIAL OFFER, 57 MAIDA VALE, LONDON W.9

DENCO (CLACTON) LIMITED

355-7-9 OLD ROAD, CLACTON-ON-SEA, ESSEX

Our components are chosen by Technical Authors and Constructors throughout the World for their performance and reliability, every coil being inspected twice, plus a final test and near spot-on alignment as a final check.

Our General Catalogue showing full product range	2s. 6d.
DTB4 Transistor & Valve circuitry for D.P. Coils	2s. 6d.
DTB9 Valve Type Coil Pack Application circuitry	2s. 6d.
MD.1 Decoder Circuitry for Stereo Reception	4s. 0d.

All post paid, but please enclose S.A.E. with all other requests in the interests of retaining lowest possible prices to actual consumers.

BOUND VOLUME No. 22 — Available End of August

of "The Radio Constructor" ➡ FOR YOUR LIBRARY

AUGUST 1968 to JULY 1969
Comprising 800 pages plus index

PRICE 35/- Postage 4/6

Special discount of 10/- for regular readers

Just cut the heading from each month's contents page, including title and month of issue, and this will be sufficient evidence of readership to qualify for the discount.

Thus regular readers will still retain their copies for workbench use, while having a splendid bound volume containing issues in mint condition.

PRICE 25/- Postage 4/6

Limited Number of Volume 21 – Price 35/- Postage 4/6

(August 1967 to July 1968) still available

We regret earlier volumes now completely sold out.

Available only from

DATA PUBLICATIONS LTD., 57 MAIDA VALE, LONDON, W.9

THE MODERN BOOK CO

101 SEMICONDUCTOR PROJECTS FOR THE HOME CONSTRUCTOR

18/- **By R. M. MARSTON** *Postage 1/-*

Radio, Illustrated Teach Yourself by David Gibson. **12s. 6d.** *Postage 1s.*

Solution of Problems in Electronics & Telecommunication by C. S. Henson. **38s.** *Postage 2s.*

Questions and Answers Colour Television by J. A. Reddihough. **10s.** *Postage 6d.*

Questions and Answers Radio and Television by H. W. Hellyer. **8s. 6d.** *Postage 6d.*

Hi-Fi In The Home by John Crabbe. **40s.** *Postage 2s.*

Amateur Radio Circuits Book by R.S.G.B. **10s. 6d.** *Postage 1s.*

Amateur Radio Techniques by R.S.G.B. **12s. 6d.** *Postage 1s.*

Tape Recorder Servicing Manual by H. W. Hellyer. **63s.** *Postage 3s. 6d.*

Transistor Electronic Organs For The Amateur by S. Astley. **20s.** *Postage 1s.*

Colour Television Pal System by G. N. Patchett. **40s.** *Postage 1s.*

Questions and Answers Electronics by Clement Brown. **8s. 6d.** *Postage 6d.*

Questions and Answers Transistors by Clement Brown. **8s. 6d.** *Postage 6d.*

Audio Amplifiers by J. R. Davies. **10s. 6d.** *Postage 6d.*

The A.R.R.L. Antenna Book by A.R.R.L. **28s. 6d.** *Postage 2s.*

The Radio Amateur's Handbook 1969 by A.R.R.L. **45s.** *Postage 4s.*

The Designer's Guide to British Transistors by I. J. Kampel. **25s.** *Postage 1s.*

We have the Finest Selection of English and American Radio Books in the Country

19-21 PRAED STREET (Dept RC) LONDON W2

Telephone PADdington 4185

BUMPER CONSTRUCTORS PARCEL

BUMPER CONSTRUCTOR'S PARCEL
Two 1½" dia. moving coil speakers. One 12 volt heavy duty DPDT relay. Up to 20 amp handling capacity. High current double pole contacts plus numerous low current contacts. 12 wire wound resistors. One 5ft. whip aerial. 12 electrolytic condensers. One brand new radiation meter. One telephone dial. One 10 henry 60 mA smoothing choke. 12 small plastic boxes suitable for building your transistorised equipment into. One ex-Govt. parachute – brand new & complete with full cords. Over 100 sq. ft. of silky material. **All this for only 25/-, p&p 5/-**

STANDARD DESK TELEPHONE SALE
Another scoop purchase enables us to offer a limited quantity of these standard desk telephones at a fraction of their original cost. Complete with dial, magneto, cradle, line, connection block, receiver etc. not new but workable. Suitable for all applications. Only **19/6** each p.p. 5/-. Two for **39/6** post free. Four for **65/-** post free.

MIN. TRANSISTORISED BFO UNITS
A miniature transistorised BFO unit (tunable) that will enable your set to receive CW & SSB reception. Compact single hole fixing. This small unit will fit anywhere. Ideal for all Ex-Govt. & commercial receivers. Complete with fitting instructions. **49/6** post free.

"SMOOTHING UNITS"
Cure your hum problems. Beautifully made pieces of equipment. 12 volts or 24 volts DC input gives a fully smoothed, fully regulated DC output. Worth £30 each. Robust metal cabinet. Brand new in makers cartons. Only 55/- carr. & ins. 10/-.

MINIATURE MOVING COIL SPEAKERS
1½in. dia. Only **3/6** each p.p. 1/6d. Two for **8/6** p. free. 4 for **15/-** p. free

GOVT. SURPLUS WIRELESS EQUIPMENT HANDBOOK
Gives detailed information and circuits on most British and American equipment price only **35/-** p.p. 5/-.

TANNOY MIKES. As new 9/6 ea. p.p. 3/6. (Heavy duty, ideal for P.A. work)

AIRCRAFT— *PLUS* **GENERAL V.H.F. TELECOMMUNICATIONS BAND REC.**

Listen to the thrills of Aircraft, Pilots and Airports at work. Also Civil Depts., Fire and Ambulance services. Gas and Electricity Depts. Ideal for receiving 2 metre amateurs. Gives super reception within the range of all transmissions. A fully transistorised receiver covering 97-147mc/s VHF broadcasts. Robust attractive 2-tone finish metal cabinet size approx. 7" x 4" x 4". Operates from a 9-volt internal battery. Speaker or earphone output plus chrome telescopic aerial. Only **£8.19.6** carr. & insurance 10/6. C.W.O. or C.O.D. Callers welcome for a demonstration.

GLOBE SCIENTIFIC LTD

All orders & callers to
38 Bridge End, Meadow Lane, Leeds 1

HEATHKIT

For Electronic kits

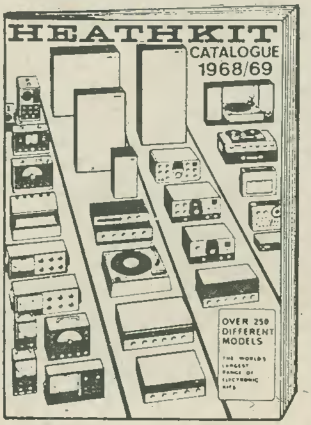

Build your own
Stereo Hi-Fi,
Test Instruments,
SW Receivers,
Amateur Gear.

A model for everyone and every interest.

and you SAVE money !

SEND FOR THE
FREE
CATALOGUE
TODAY !

Please send me the FREE Catalogue.
Name.....................................
Address.....................................

DAYSTROM LTD.
Dept. RC-8
GLOUCESTER
GL2 6EE

BI-PRE-PAK
LIMITED

FULLY TESTED AND MARKED

AC107	3/–	OC170	3/–
AC126	2/6	OC171	4/–
AC127	2/6	OC200	3/6
AC128	2/6	OC201	7/–
AC176	5/–	2G301	2/6
ACY17	3/–	2G303	2/6
AF114	4/–	2N711	10/–
AF115	3/6	2N1302-3	4/–
AF116	3/6	2N1304-5	5/–
AC117	3/6	2N1306-7	6/–
AF186	10/–	2N1308-9	8/–
AF139	10/–	2N3844A	5/–
AF239	12/6	**Power Transistors**	
BFY50	4/–		
BSY25	7/6	OC20	10/–
BSY26	3/–	OC23	10/–
BSY27	3/–	OC25	8/–
BSY28	3/–	OC26	5/–
BSY29	3/–	OC28	7/6
BSY95A	3/–	OC35	5/–
OC41	2/6	OC36	7/6
OC44	1/11	AD149	10/–
OC45	1/9	AUY10	30/–
OC71	2/6	2N3055	15/–
OC72	2/6	**Diodes**	
OC73	3/6	AAY42	2/–
OC81	2/6	OA95	2/–
OC81D	2/6	OA70	1/9
OC83	4/–	OA79	1/9
OC139	2/6	OA81	1/9
OC140	3/6	IN914	1/6

FREE! Packs of your own choice up to the value of 10/– with orders over £4.

TRY OUR X PACKS FOR UNEQUALLED VALUE

XA PAK

Germanium PNP type transistors, equivalents to a large part of the OC range, i.e. 44, 45, 71, 72, 81, etc.

PRICE £5 PER 1,000
POST & PACKING 4/6 U.K.

XB PAK

Silicon TO-18 CAN type transistors NPN/PNP mixed lots, with equivalents to OC200-1, 2N706a, BSY27/29, BSY95A.

PRICE £4.5.0 PER 500 £8 PER 1,000
POST & PACKING 2/6 U.K.

XC PAK

Silicon diodes miniature glass types, finished black with polarity marked, equivalents to OA200, OA202, BAY31-39 and DK10, etc.

PRICE £4.10.0 PER 1,000
POST & PACKING 2/6 U.K.

ALL THE ABOVE UNTESTED PACKS HAVE AN AVERAGE OF 75% OR MORE GOOD SEMI-CONDUCTORS. FREE PACKS SUSPENDED WITH THESE ORDERS. ORDERS MUST NOT BE LESS THAN THE MINIMUM AMOUNTS QUOTED PER PACK.

NEW TESTED & GUARANTEED PAKS

B2	4	Photo Cells, Sun Batteries. Inc. book of instructions.	10/-
B77	2	AD161–AD162 NPN/PNP Trans. Comp. output. Pair	10/-
B79	4	1N4007 Sil. Rec. Diodes. 1000 Piv. 1 amp Miniature.	10/-
B81	10	Reed Switches. Mixed types large and small.	10/-
B89	2	5SP5 Light Sensitive Cells. Light res. 400Ω. Dark 1MΩ.	10/-
B91	8	NKT163/164 PNP Germ. to —5. Equiv. to OC44, OC45.	10/-
B92	4	NPN Sil. Trans. A06=BSX 20, 2N2369, 500 MHz, 360 mW.	10/-
B93	5	GET113 Trans. equivalent to ACY17-21 PNP Germ.	10/-
B94	6	NPN Sil. Planar Epitaxial Trans. CS4 similar to BSY38 or BC108.	10/-
B96	5	2N3136 PNP Sil. Trans. TO-18. HFE100-300. IC.600mA. 200 MHz.	10/-
B98	10	XB112 & XB102 equiv. to AC126, AC156, OC81/2, OC71/2, NKT271, etc.	10/-
B99	200	Capacitors, Electrolytics, Paper, Silver Mica, etc. Postage on this pak 2/6.	10/-
H2	2	2N2067 Matched Pair PNP Germ. 12 Watts.	10/-

HUGE CLEARANCE OF UHF/VHF TUNER UNITS REJECTS

Stocks Almost Exhausted! Place Your Orders NOW!!!

Fantastic Transistor Value!

TU.2. Containing 2 AF186's & 2 AF178's **PRICE 10/– each Unit**

TU.3. Containing 2 AF186's & 2 AF178's PLUS Waveband Slider Switch **PRICE 12/6 each Unit**

P & P 2/6 each Unit. All the Units have many other components, e.g. Capacitors, Resistors, Coils and Tuning Condensors, etc. **Connection data supplied with all Tuner Units.**

Return of the unbeatable P.1 Pak.

Now greater value than ever

Full of short lead semiconductors and electronic components, approx. 170. We guarantee at least 30 really high quality factory marked Transistors PNP and NPN, and a host of diodes and rectifiers. Mounted on printed circuit panels. Identification chart supplied to give some information on the transistors.

P.1 PLEASE ASK FOR PAK P.1 ONLY **10/-**
2/- P & P on this Pak.

NEW UNMARKED UNTESTED PAKS

B78	12	Integrated Circuits, Data & Circuits of types, supplied with orders.	10/-
B80	8	Dual Trans. Matched O/P pairs NPN. Sil. in TO-5 can.	10/-
B82	10	OC45, OC810 & OC81 Trans. Mullard glass type.	10/-
B83	200	Trans. Makers rejects. NPN/PNP. Sil. & Germ.	10/-
B84	100	Silicon Diodes DO-7 glass equiv. to OA200, OA202.	10/-
B66	150	High quality Germ. Diodes. Min. glass type.	10/-
B86	50	Sil. Diodes sub. min. IN914 & IN916 types.	10/-
B87	100	Germ. PNP Trans. equiv. to OC44, OC45, OC81, etc.	10/-
B88	50	Sil. Trans. NPN, PNP. equivalent to OC200/1, 2N706A, BSY95A, etc.	10/-
B60	10	7 Watt Zener Diodes. Mixed voltages.	10/-

PRE-PAK. N.605 POWER TRANSISTOR EQUIVALENT TO NKT301-2-3-4 **5/- each**

COMPLEMENTARY SET NPN/PNP GERM. TRANS. **2/6 pair**

MAKE A REV. COUNTER for your Car. The 'TACHO BLOCK'. This encapsulated block will turn any 0-1mA meter into a perfectly linear and accurate rev. counter for any car. State 4 or 6 cylinder. **20/- each**

FREE CATALOGUE AND LISTS for:–

ZENER DIODES
TRANSISTORS, RECTIFIERS
FULL PRE-PAK LISTS
& SUBSTITUTION CHART

MINIMUM ORDER 10/-. CASH WITH ORDER PLEASE. Add 1/- post and packing per order. OVERSEAS ADD EXTRA FOR AIRMAIL.

THERE IS ONLY ONE
BI-PRE-PAK LTD
BEWARE OF IMITATIONS

FREE! A WRITTEN GUARANTEE WITH ALL OUR TESTED SEMICONDUCTORS

BI-PRE-PAK LTD
DEPT. C, 222-224 WEST ROAD, WESTCLIFF-ON-SEA, ESSEX
TELEPHONE: SOUTHEND (0702) 46344

... you need the

HOME RADIO CATALOGUE

It's the finest, most comprehensive Catalogue we have ever produced – this latest edition. It has 330 pages, over 8,000 items listed, over 1,500 of them illustrated. Everything for the keen constructor – including tools and test gear. With each Catalogue we supply a 30-page Price Supplement, a bookmark giving electronic abbreviations, and an order form. All for only 8/6d plus 3/6 post, packing and insurance. Moreover, every catalogue contains 6 vouchers, each worth 1/- when used as directed.

Please write your Name and Address in block capitals

Name ______________________________

Address ____________________________

____

____

HOME RADIO (COMPONENTS) LTD., Dept. RC,
234-240 London Road, Mitcham, Surrey CR4 3HD.

POST THIS COUPON NOW
with cheque or P.O. for 12/-

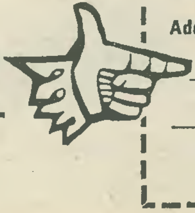

The price of 12/- applies only to catalogues purchased by customers residing in the U.K.

THE **Radio Constructor**

Incorporating THE RADIO AMATEUR

AUGUST 1969

Vol. 23 No. 1

Published Monthly (1st of Month)
First Published 1947

Editorial and Advertising Offices
57 MAIDA VALE LONDON W9

Telephone 01-286 6141
Telegrams Databux, London

Annual Subscription 42s. (U.S.A. and Canada $5) including postage. Remittances should be made payable to "Data Publications Ltd.". Overseas readers please pay by cheque or International Money Order.

Queries. We regret that we are unable to answer queries other than those arising from articles appearing in this magazine nor can we advise on modifications to equipment described. Queries should be submitted in writing and accompanied by a stamped addressed envelope for reply.

Correspondence should be addressed to the Editor, Advertising Manager, Subscription Manager or the Publishers as appropriate.

Opinions expressed by contributors are not necessarily those of the Editor or proprietors.

Production.—Letterpress.

CONTENTS

Published in Great Britain by the Proprietors and Publishers, Data Publications Ltd, 57 Maida Vale, London, W.9.
The *Radio Constructor* is printed by Kent Paper Company Ltd, London and Ashford, Kent.

SEPTEMBER ISSUE WILL BE PUBLISHED ON SEPTEMBER 2nd

THE "KANGAROO" RADIOGRAM

by

SIR DOUGLAS HALL, K.C.M.G., M.A.(Oxon)

This ingenious design consists of a record player and a medium and long wave receiver combined in a single cabinet. The receiver section may be removed, if desired, and operated on its own as a completely separate portable receiver

SOME TIME AGO THE AUTHOR DESCRIBED A DESIGN for a car radio which he had made for one of his daughters.[1] The apparatus in the present article was made for another daughter, the specification in this case being a mains driven radiogram capable of giving good quality from records and from stations in the broadcast bands without the use of an aerial, and having a tuner section which was immediately removable and capable of being used as a self-contained portable receiver powered by its own internal battery. The result has been called the "Kangaroo" radiogram as it carries its baby in a pouch.

The circuit is shown in Fig. 1. That part to the left of the three pairs of contacts designated 'X', 'Y' and 'Z' comprises the portable section. The part to the right is the mains driven amplifier which also provides power for the tuner section when required.

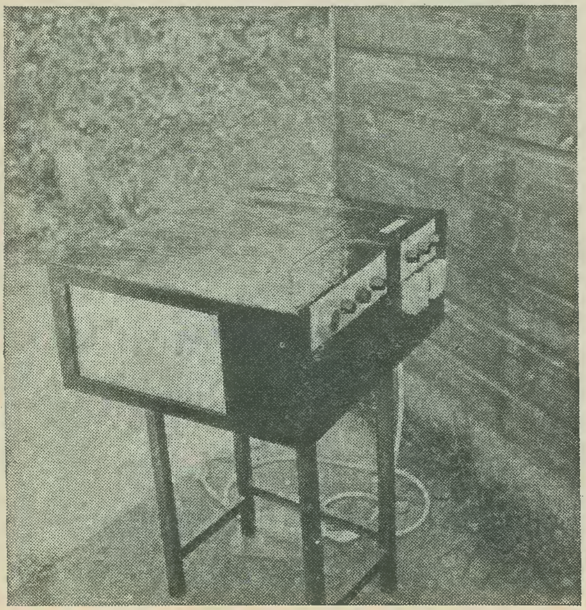

The complete radiogram with the receiver section in place

PORTABLE SECTION

The circuit of the portable section is virtually that described by the author under the title 'Developing the "Miniflex" Circuit.'[2] For those who do not have the relevant issue of the magazine by them, TR1 and TR2 are silicon n.p.n. transistors, TR1 functioning first as a common collector amplifier at radio frequency, the signal being applied by the tuned ferrite rod aerial given by L1, L2 and VC1. C1 provides a capacitance tap into the circuit. The signal then passes from the emitter of TR1 to the base of TR2 which functions as a common emitter radio frequency amplifier, the output appearing across the choke L3. D1 demodulates the signal and applies the resultant audio frequency current to TR1 and TR2 which, in cascade, form a super alpha pair. D1 is a special selenium diode with a very much higher resistance than is given by either a silicon or germanium device, *and must be used.* Regeneration takes place because of the capacitance tap due to C1 and is controlled by VR1, which is a combined r.f. and a.f. volume control. The output transistor, TR3, is a germanium device, as there is insufficient voltage from the battery to allow the use of a silicon transistor in this position. C1 ensures that correct regeneration occurs, and that oscillation takes place with VR1 slider fairly near its maximum position, at the TR1 emitter end of the track. At the low frequency end of the medium wave band further control is obtained by carefully adjusting the angle of L3 in relationship to the aerial rod. To set up the receiver, L3 should be oriented by twisting it on its leads so that oscillation starts with VR1 at as constant a position as possible throughout the medium wave range.

When S1 is switched for long waves, trimmer capacitor VC2 is connected across L3, and is adjusted so that Radio 2 on 1,500 metres is just free from oscillation with VR1 at or near maximum. Other stations on the long wave band will not be received at maximum efficiency, though one or two may be received quite well in some parts of the country.

Battery current varies with the intensity of the received carrier and the setting of the volume control. With a local station turned up to overload point

---

[1] Sir Douglas Hall, "Design for a Universal Car Radio", 'The Radio Constructor', April 1969.

[2] See: "The 'Miniflex' Dual Purpose Personal Receiver", 'The Radio Constructor', June 1968; and "Developing the 'Miniflex' Circuit", 'The Radio Constructor', July 1968.

some 30mA or so may pass from the battery; but with a less powerful station turned down to bedside listening level, only about one-third of this current will be drawn. A useful economy effect is thus incorporated.

Rx will be discussed later. It should be omitted when the portable section is first built and tried out.

It is important that TR1, TR2, TR3 and D1 should all be as specified. So far as the transformers are concerned, some alternatives are permissible. (See note at end of article). Again, those readers who wish to modify a receiver built to the author's earlier design in the July 1968 issue may use the Ardente interstage transformer and the Colne Electric output transformer specified for that receiver. These would now appear in the T1 and T3 positions respectively. Whilst on the subject of using components from earlier designs, the mains transformer specified for the author's 'Pentonlector' circuit[3] may similarly be used here, R6 being omitted. The earlier transformer may cause some increase in noise. TR4 may also be the transistor specified for the 'Pentonlector', or an AD140, though the high amplification OC22 specified here will probably give better results. In fact, any constructor who has made both the earlier receiver and the 'Pentonlector' amplifier, and wishes to arrange a marriage between the two, will have very few components to buy.

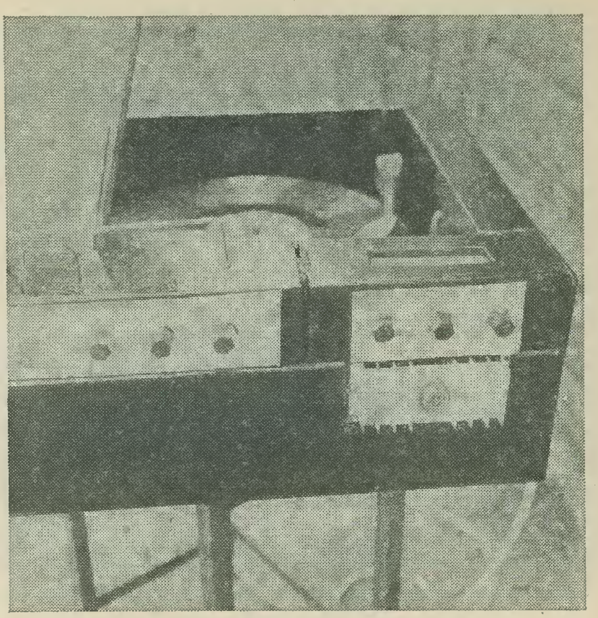

A closer view showing the position taken up by the pickup and turntable. Also visible are the carrying handle for the receiver section and the amplifier heat sink. It is intentional that the latter be positioned at the cabinet surface

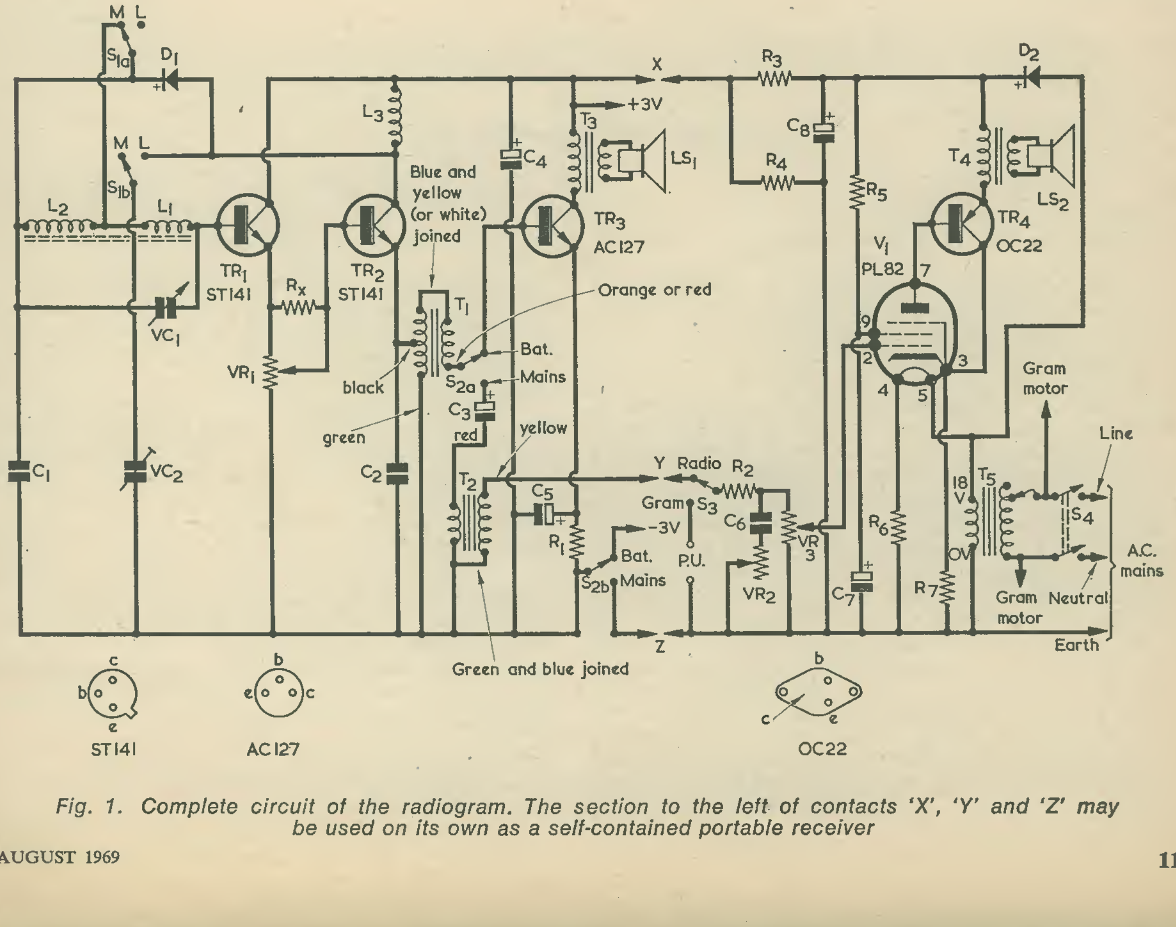

Fig. 1. Complete circuit of the radiogram. The section to the left of contacts 'X', 'Y' and 'Z' may be used on its own as a self-contained portable receiver

---

3. Sir Douglas Hall, "The 'Pentonlector' Record Player Amplifier Circuit", 'The Radio Constructor', July 1966.

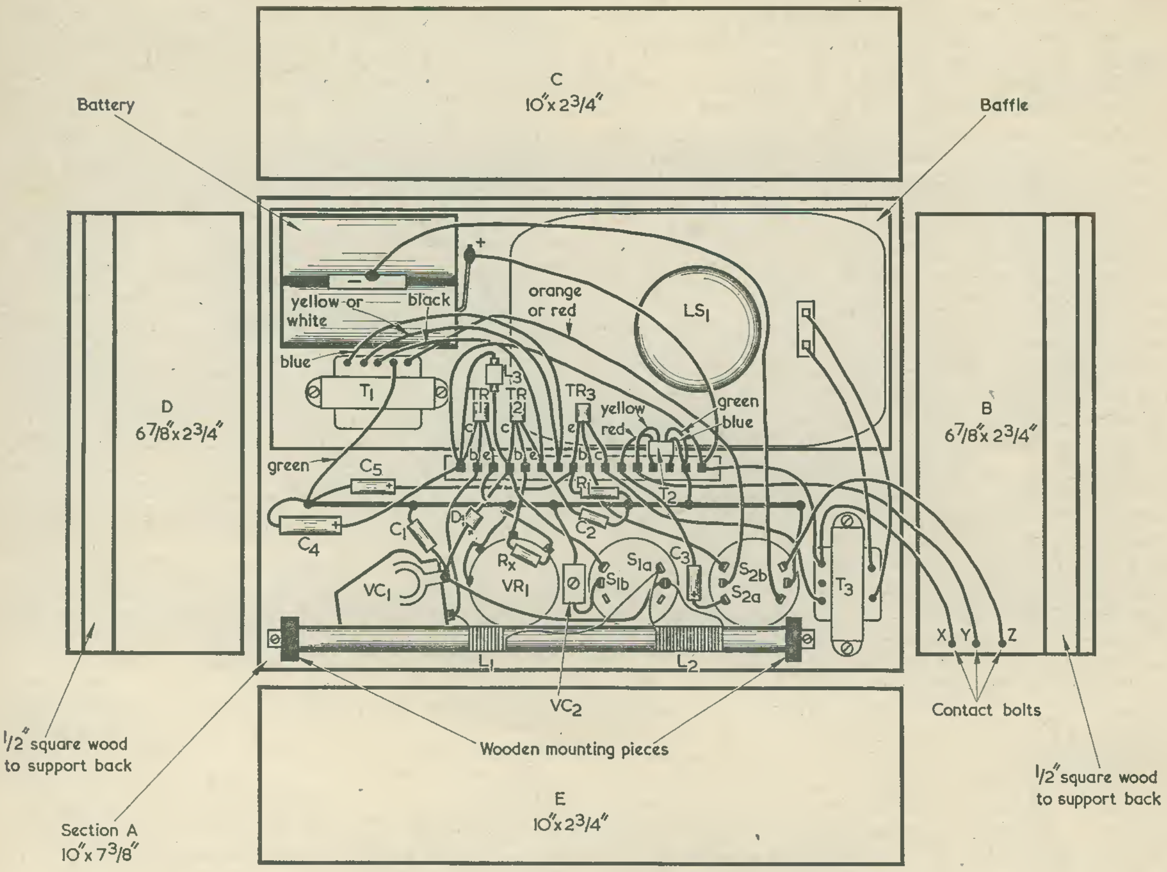

Fig. 2. Layout and wiring of the receiver section

COUPLING TO THE AMPLIFIER

It will be seen that turning S2 to the 'Mains' position switches the receiver off when it is used as a portable, and this is the position for S2 when the receiver is slipped into place in the radiogram, a procedure which joins up the contacts 'X', 'Y' and 'Z'. The output from T1, which is connected as a 1 : 4 autotransformer, now feeds into the low inductance winding of T2, whose usual function is to couple a crystal microphone to a transistor amplifier input. T2 is connected here to give a step up of 1 : 32 (it bears no resemblance to an output transformer, incidentally!) and it passes the signal to the grid of V1. The overall step up of impedance between the emitter of TR2 (at about 50Ω), and the grid of V1, is about 15,000 times, and a voltage step up of 128 times is provided. Readers need not be afraid that T1 and T2 which, in effect, form a single transformer with a ratio of 1 : 128 will introduce distortion. Transformers frequently do bring about this effect; but this is nearly always due either to poor components, to using transformers with windings totally unsuited to the task they are supposed to fulfil, or to the presence of too much capacitance in the form of strays or otherwise, across a high inductance winding. In the present case quality will be found to be excellent.

It should be emphasised at this point that the d.c. resistance of that part of the winding of T1 between the emitter of TR2 and the negative supply line is of importance, since this winding forms the emitter resistor and should have a resistance of between 100Ω and 150Ω. Most other transformers (apart from the alternative mentioned above) will not be suitable for T1. C3 is included in circuit to prevent the other transformer windings being in parallel, at d.c., with the one which provides the emitter resistance. It also prevents d.c. passing through the low inductance winding of T2, which is a tiny component. C3 will have about 0.5 volt across it, this being ample for polarisation.

The amplifier section uses the 'Pentonlector' circuit, but a modification to the tone control circuit has been made which, incidentally, will improve any 'Pentonlector' amplifiers already made for record players or other use. It will be seen that there is now a resistor, R2, in series with the volume control VR3, and that the tone control, consisting of VR2 in series with C6, is taken to the junction of R2 and VR3. This results in a considerable improvement as the

COMPONENTS

Resistors

(All fixed values ½ watt 10% unless otherwise stated. Low-noise "moulded" potentiometers are preferred for VR2 and VR3).

R1	15Ω
R2	100kΩ
R3	820Ω
R4	330Ω
R5	1kΩ
R6	4.7Ω, 1 watt
R7	4.7Ω
VR1	5kΩ potentiometer, wirewound
VR2	1MΩ potentiometer, log track, with switch S4
VR3	1MΩ potentiometer, log track
Rx	See text

Capacitors

C1	0.005μF, paper or plastic foil
C2	0.01μF, paper or plastic foil
C3	100μF electrolytic, 2.5V wkg.
C4	500μF electrolytic, 6V wkg.
C5	500μF electrolytic, 2.5V wkg.
C6	0.003μF, paper or plastic foil
C7	100μF electrolytic, 25V wkg.
C8	2,500μF electrolytic, 25V wkg.
VC1	300pF variable, Dilecon (Jackson Bros.)
VC2	750pF trimmer, postage-stamp type

Inductors

L1, L2	See text
L3	2.5mH choke type CH1 (Repanco)
T1	Repanco transformer type TT4 (Cat. No. TRC32—Home Radio)*
T2	Ardente transformer type D102 (Cat. No. TRC16C—Home Radio)*
T3	Repanco transformer type TT56
T4	Repanco transformer type TT12
T5	Mains transformer, secondary 0-9-18V at 1.25A (R.S.C. Hi-Fi Centres Ltd., 102 Henconner Lane, Bramley, Leeds 13)

* See note at end of article.

Valve

V1	PL82 (Mullard)

Semiconductors

TR1	ST141 (Sinclair)
TR2	ST141 (Sinclair)
TR3	AC127 (Mullard)
TR4	OC22 (Mullard)
D1	Diode type M3 (available as "half-wave meter rectifier" from Henry's Radio, or under Cat. No. MR50 from Home Radio)
D2	DD000 (Lucas)

Heat Sink

Heat sink type H10 (Henry's Radio)

Switches

S1	2-pole 2-way, rotary
S2	2-pole 2-way, rotary
S3	1-pole 2-way, rotary
S4	d.p.s.t., part of VR2

Speakers

(See text re depth)

LS1	3Ω, 6in. x 4in.
LS2	3Ω, 10in. x 6in.

Battery

3-volt cycle lamp battery type 800 (Ever Ready)

Miscellaneous

Single-play record motor, turntable and pickup
Ferrite rod 8in. x ⅜in. diameter
16-way tagstrip
B9A valveholder
Knobs, material for cabinet, etc.

tone control is now constant for different settings of the volume control.

The audio frequency signal is amplified by V1 which has a good amplification factor even with the low voltage applied to its anode and screen. The anode is directly coupled to the base of the output transistor, TR4, which acts as a common collector device. The quality given by this amplifier is outstandingly good, and the overall result on radio, with three of the four audio frequency amplifying stages using the common collector configuration with its inherent negative feedback, is most pleasing.

The mains transformer in the original 'Pentonlector' amplifier was a charger transformer and this, being used for a purpose not intended by its makers, was apt to be a little noisy. The transformer specified for T5 in the present design is very quiet and is working so well within its limits that it scarcely becomes warm. The OV and 18V secondary terminals are used, and R6 causes 16.5V to be applied to the heater of V1. R3 and R4, in company with the current drawn by TR1 and TR2, cause about 3 volts to be applied to the tuner section.

PRACTICAL DETAILS

It is suggested that the portable section be built first and tried out before the rest of the work is tackled. As this section is a complete receiver in its own right, some readers may like to spread the expense in this way.

With the exception of the speaker, LS1, and T1, all components are mounted on panel A of Fig. 2. This panel, together with panels B, C, D and E is made of ¼in. plywood. At this stage, panels B, C, D and E are not fitted. Panel A is the front panel of the receiver and its requires a suitable aperture for the speaker. Details of the layout on panel A are shown in Fig. 2. A 16-way tagstrip is used for most of the components. Note that T2 is held in position by soldering the ends of its clamp to two adjacent tags.

The ferrite rod is 8in. long with a diameter of ⅜in. and is mounted in two holes drilled in two pieces of wood, each about 2in. by 1in. by ⅜in. thick, and provided with a small bracket for mounting, as shown in Fig. 2. L1 has 75 turns of 32 s.w.g. enamelled wire closewound; whilst L2 has 300 turns of 38 s.w.g. enamelled wire wound in a pile about 1½in. long. Both windings are wound in the same direction. L1 and L2 should be on separate sleeves of paper or "Contact" free to slide on the rod. The rod should not be mounted until all other components are in position and wired up, and it should leave sufficient room for panel E to be fixed in place later.

T3 is fixed by means of tags soldered to the small extensions of the clamp. Use short screws throughout, remembering that the other side of the panel will be the visible front of the receiver.

The speaker should not be more than 2½in. deep or all the dimensions, including those of the radiogram cabinet, will have to be changed. It can be glued or otherwise affixed to a hardwood baffle measuring 9½ by 4in. This baffle is then screwed to the panel with a piece of speaker fabric in between. Remember that room must be left for panels B, C and D to be fitted in place. A clip or rubber band can be used to hold the battery in position. Transformer T1 is also mounted on the baffle.

The receiver, as wired up on panel A, and with no further panels added, can be adjusted for medium and long waves as already described. It should receive a large number of stations after dark, and several during daylight hours, and will give very good quality with local stations. A piece of white card can be placed under the knobs, suitably inscribed with Panel-Signs or by hand. If hand capacitance effects manifest themselves, a piece of metal foil can be placed under the white card, and held in place by the locking nuts of VR1, S1 and S2. It must not touch the nut of VC1, or no signals will be heard! The foil can be earthed by taking a lead from the metal cover of VR1 to the negative line.

At this stage Rx can be tried. Provided that oscillation starts at a fairly constant position of VR1 throughout the tuning range, Rx can spread out the useful arc of VR1 and make adjustments for distant stations more easy to carry out. The value cannot be predicted with accuracy but is likely to be of the order of 1kΩ. If it is too large it will have little effect. If too small it will cause oscillation to start at a very low setting of VR1, and sensitivity will suffer. The value should be chosen with a new battery in use.

The top, bottom and sides, E, C, B and D, can now be screwed and glued to the inside edges of the panel A, but first three 4BA bolts should be fitted to B as shown. The heads are on the outside, and one or more washers will be needed under each bolt head. The bolts should be separated from each other

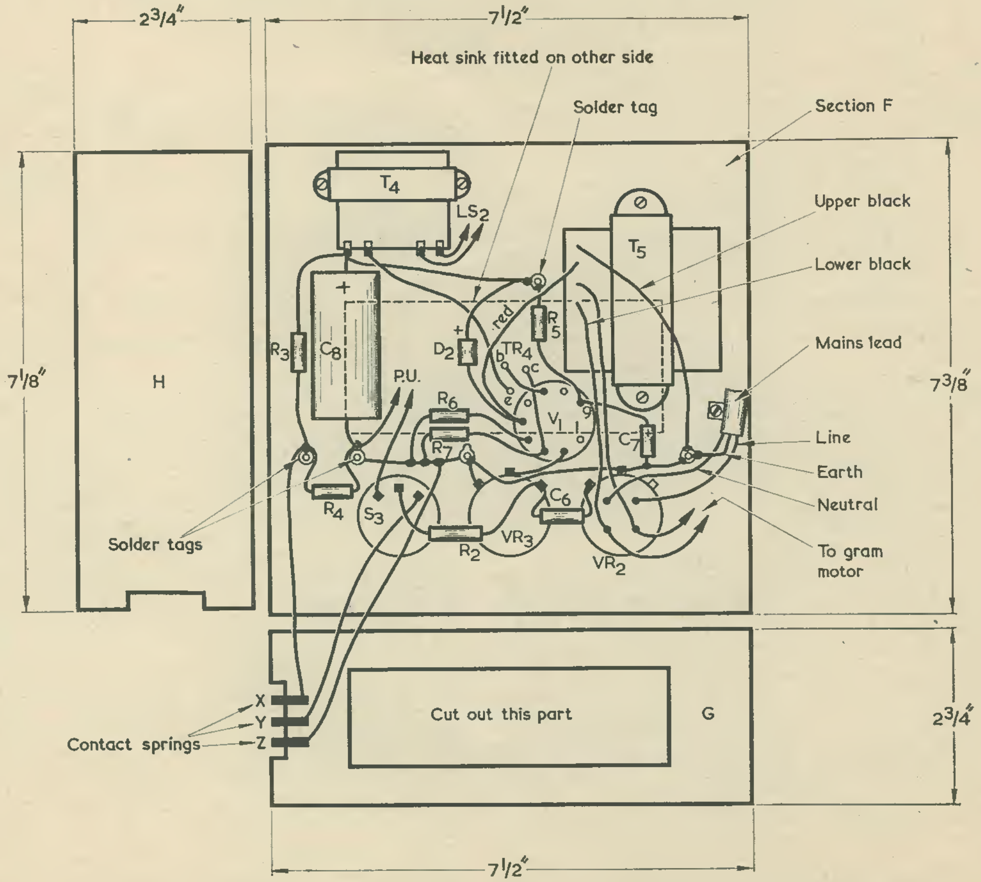

Fig. 3. The wiring and components in the amplifier and mains power supply section

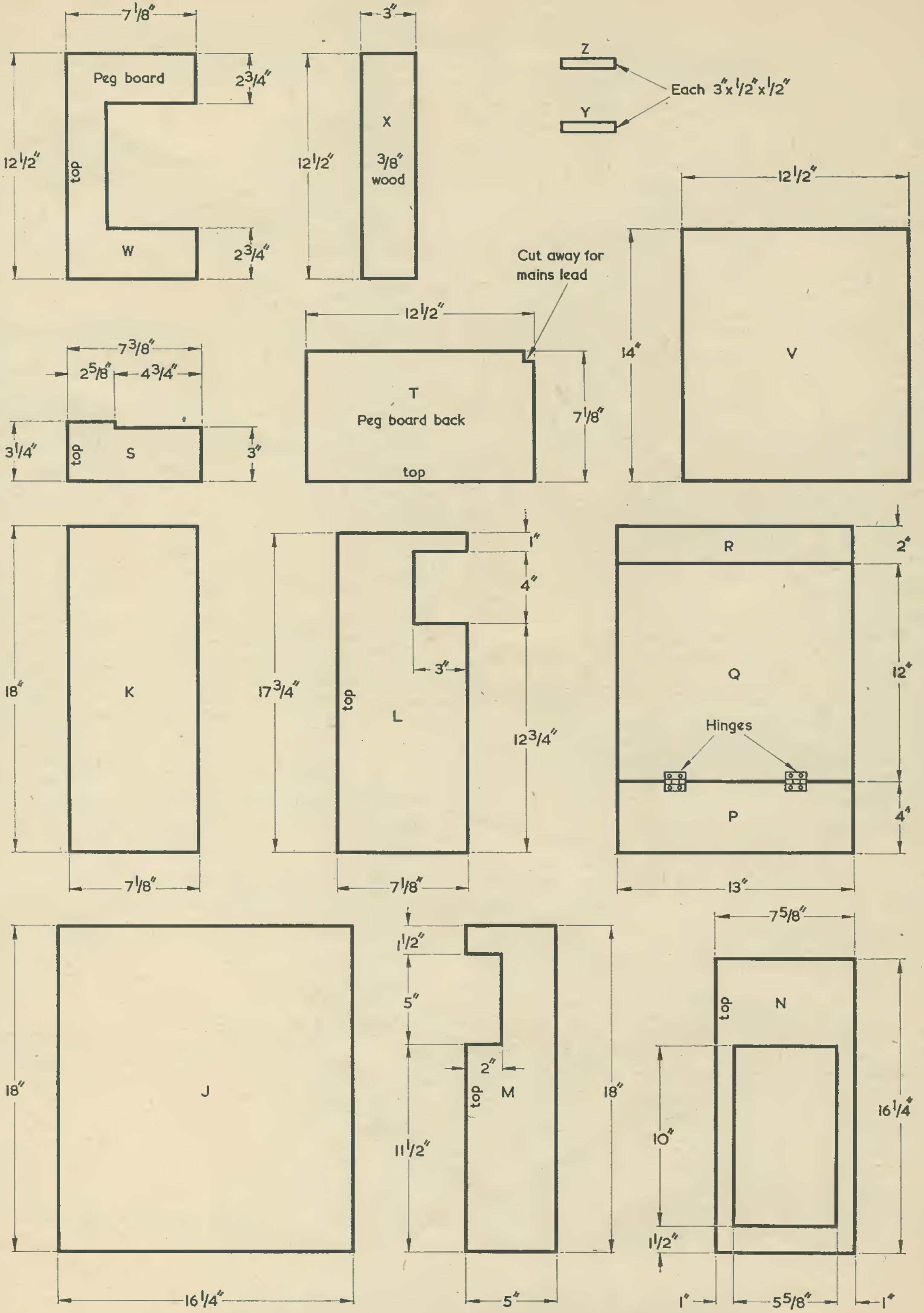

Fig. 4. The component parts of the cabinet and motorboard assembly

by about ½in., and their purpose is to make contact with springs to be fitted to the amplifier section later. Note that it is panel E, and not C, which is the top of the receiver when it is fitted to the radiogram cabinet. A simple handle should be devised and fitted to panel E, in order to make it easy to pull the portable section out of the radiogram cabinet. Lengths of square section wood are glued to the sides B and D, as shown in Fig. 2, and the receiver back is screwed to these. The back consists of a panel of pegboard measuring 9½in. by 6⅞in. and fits flush.

ASSEMBLING THE AMPLIFIER

The amplifier section is made as indicated in Fig. 3. Components are fitted to panel F and wired up as shown. The valve lies on its side, over R6 and R7. The valveholder is illustrated turned through 90° for clarity, its socket tag side being shown. It should be fitted to a small bracket, so that the valve projects sideways towards C8. Note that the heat sink for TR4 is screwed on the other side of panel F and that this should not be mounted finally into position until the cabinet has been made, to ensure that it fits neatly into the cut-out section of M in Fig. 4. Short screws must be used as the sink is at collector potential, and these must *not* touch T5. Section G in Fig. 3 has a rectangular part cut out for ventilation, and this cut-out should have a piece of speaker fabric affixed to its inside. Note also the three pieces of springy brass, 'X', 'Y' and 'Z', which are screwed to section G. The contacts from old 4.5 volt flash light batteries were used in the prototype. One layer of the plywood is cut away for each spring to prevent sideways movement, and a single bolt holds each in place. Note also the small sections cut away from G and H to allow for these contacts. It will be seen that the panel for the amplifier has only a top and one side attached to it. There is no bottom and no back. When the amplifier section is fitted in the cabinet, panel G is at the top.

The colours of three of the leads from T5 are indicated in Fig. 3, and the fourth should be chosen to suit the mains voltage. *However, before wiring up this component, check the colours as shown by the manufacturers of the transformer, in case there have been changes. All unused leads must be carefully taped up.*

Before making connections to the mains on-off switch, S4, check the tag positioning with the aid of a continuity tester or ohmmeter. This precaution is necessary as the tag positioning on some switches may vary from that shown in Fig. 3.

A piece of suitably inscribed card can be placed under the three controls.

COMPLETE CABINET

Next the cabinet for the radiogram should be made up, following the information given in Figs. 4 and 5. All the panels are ¼in. plywood, apart from sections T and W which are pegboard, and section X which is ⅜in. thick. The part cut away from section M has already been discussed. The area cut away from section L provides ventilation and also eases the process of screwing the amplifier section to the inside of the cabinet. The sections P, Q and R are cut from one piece of wood to give a neat finish. Section J is the bottom.

Parts V to Z are for the gram motorboard assembly and can be made after the cabinet is assembled. The notes given later concerning the motorboard should be read, also, before parts V to Z are cut out.

It is important to note that the dimensions in Fig. 4 assume a plywood thickness of ¼in. and that there is very little tolerance or allowance for error. Before marking out, check that the 18in. dimension of part J will satisfactorily take the receiver and amplifier *as built*, plus a thickness of the plywood to be used and, if not, adjust this and the corresponding dimensions of other parts accordingly. Similarly check that the depth of the receiver can be accommodated

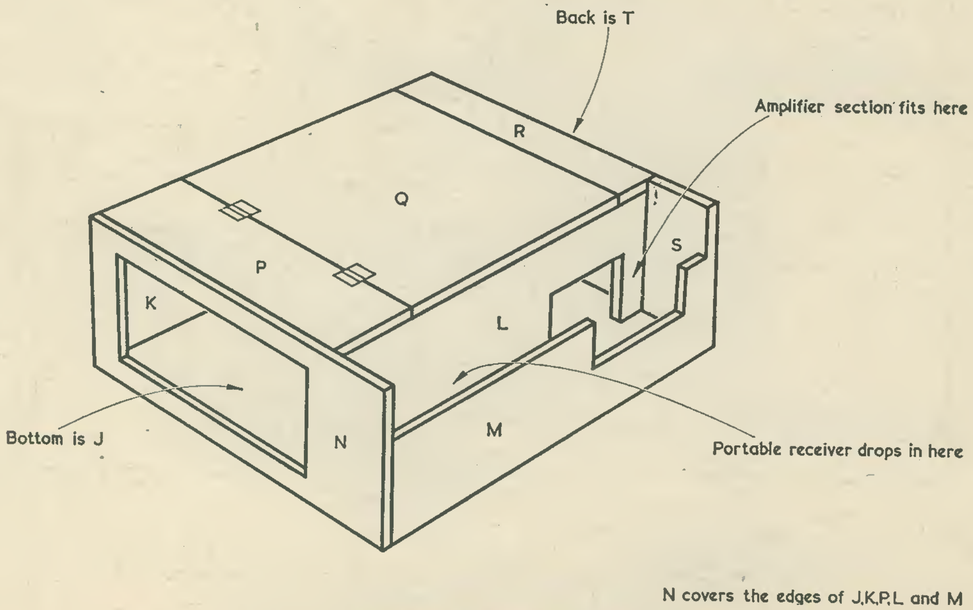

Fig. 5. The cabinet is assembled as shown here

by about ½in., and their purpose is to make contact with springs to be fitted to the amplifier section later. Note that it is panel E, and not C, which is the top of the receiver when it is fitted to the radiogram cabinet. A simple handle should be devised and fitted to panel E, in order to make it easy to pull the portable section out of the radiogram cabinet. Lengths of square section wood are glued to the sides B and D, as shown in Fig. 2, and the receiver back is screwed to these. The back consists of a panel of pegboard measuring 9½in. by 6⅞in. and fits flush.

ASSEMBLING THE AMPLIFIER

The amplifier section is made as indicated in Fig. 3. Components are fitted to panel F and wired up as shown. The valve lies on its side, over R6 and R7. The valveholder is illustrated turned through 90° for clarity, its socket tag side being shown. It should be fitted to a small bracket, so that the valve projects sideways towards C8. Note that the heat sink for TR4 is screwed on the other side of panel F and that this should not be mounted finally into position until the cabinet has been made, to ensure that it fits neatly into the cut-out section of M in Fig. 4. Short screws must be used as the sink is at collector potential, and these must *not* touch T5. Section G in Fig. 3 has a rectangular part cut out for ventilation, and this cut-out should have a piece of speaker fabric affixed to its inside. Note also the three pieces of springy brass, 'X', 'Y' and 'Z', which are screwed to section G. The contacts from old 4.5 volt flash light batteries were used in the prototype. One layer of the plywood is cut away for each spring to prevent sideways movement, and a single bolt holds each in place. Note also the small sections cut away from G and H to allow for these contacts. It will be seen that the panel for the amplifier has only a top and one side attached to it. There is no bottom and no back. When the amplifier section is fitted in the cabinet, panel G is at the top.

The colours of three of the leads from T5 are indicated in Fig. 3, and the fourth should be chosen to suit the mains voltage. *However, before wiring up this component, check the colours as shown by the manufacturers of the transformer, in case there have been changes. All unused leads must be carefully taped up.*

Before making connections to the mains on-off switch, S4, check the tag positioning with the aid of a continuity tester or ohmmeter. This precaution is necessary as the tag positioning on some switches may vary from that shown in Fig. 3.

A piece of suitably inscribed card can be placed under the three controls.

COMPLETE CABINET

Next the cabinet for the radiogram should be made up, following the information given in Figs. 4 and 5. All the panels are ¼in. plywood, apart from sections T and W which are pegboard, and section X which is ⅜in. thick. The part cut away from section M has already been discussed. The area cut away from section L provides ventilation and also eases the process of screwing the amplifier section to the inside of the cabinet. The sections P, Q and R are cut from one piece of wood to give a neat finish. Section J is the bottom.

Parts V to Z are for the gram motorboard assembly and can be made after the cabinet is assembled. The notes given later concerning the motorboard should be read, also, before parts V to Z are cut out.

It is important to note that the dimensions in Fig. 4 assume a plywood thickness of ¼in. and that there is very little tolerance or allowance for error. Before marking out, check that the 18in. dimension of part J will satisfactorily take the receiver and amplifier *as built*, plus a thickness of the plywood to be used and, if not, adjust this and the corresponding dimensions of other parts accordingly. Similarly check that the depth of the receiver can be accommodated

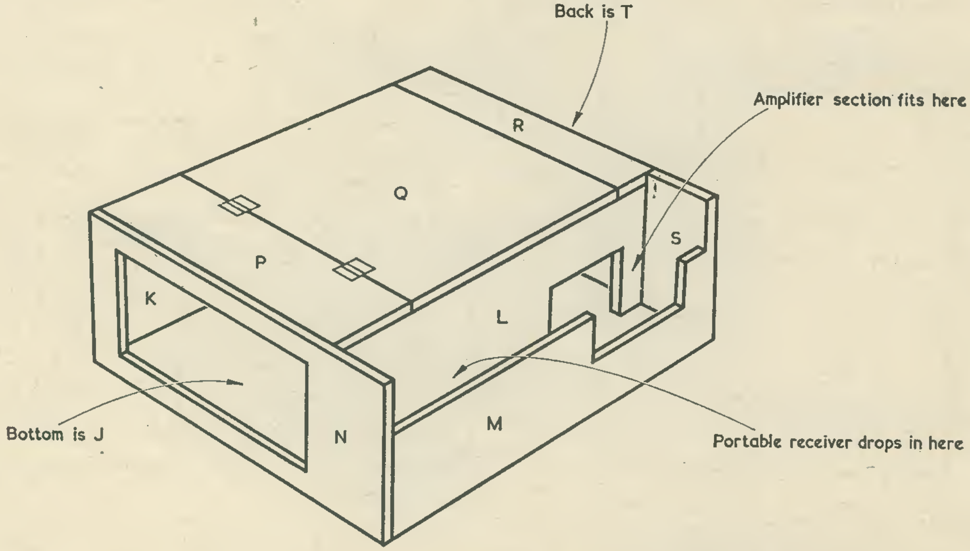

N covers the edges of J,K,P,L and M

Fig. 5. The cabinet is assembled as shown here

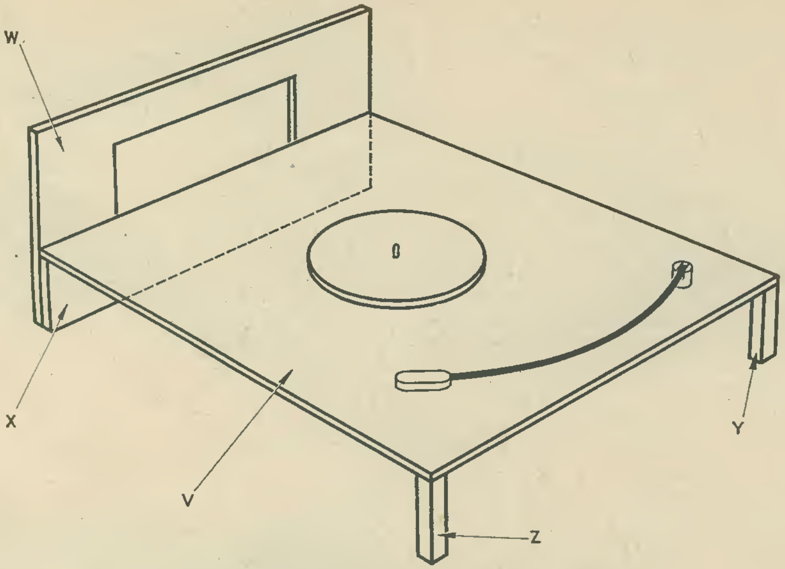

Fig. 6. Details of the motorboard assembly

and, later, the 12½in. dimension of parts V, W and X.

The cabinet should be screwed and glued together and sanded down, the edges rounded off, plastic filler used as required, and varnished and painted. It is a neat plan, when the glue is dry, and before sanding and varnishing, to replace the screws with matchsticks dipped in glue.

LS2 is first fitted to a suitably cut baffle of hardboard measuring 11in. by 7in., which, in its turn, is fitted over a piece of speaker fabric to the inside of N. Finally the motorboard should be made. See Figs. 4 and 6. If the depth of the speaker is greater than about 3½in. it may be necessary to cut out a section of V to accommodate the magnet, and to widen the cut-out area of W to allow room for a 12in. record. It may also be necessary to lengthen Y and Z and to widen X in order to ensure that a 12in. record rides above the speaker magnet, if this is of large diameter. The record deck may be chosen by the constructor, but the dimensions of the cabinet do not allow for the use of an auto-changer. The pickup should have a high output crystal cartridge. The B.S.R. type TC8H is used in the prototype.

The leads from the amplifier section to the motor, pickup and speaker can be passed through the cut-out section of L. It is convenient for the connections to be soldered at the amplifier end last, this section being held partly free from its slot and the leads made long enough to allow for this. The deck section can then be pushed into position and fixed to the inside of the cabinet by screws passing through the back into Y and Z. The other end of this deck section is held in position because W fits under P.

It may be found that selectivity suffers when the receiver is used on the mains. If so, it can be brought up to the same level as is enjoyed in portable use by placing a Repanco 2.5mH choke type CH1 in each of the three leads to the mains. These chokes can be mounted on a small 3-way tagstrip, two of the choke

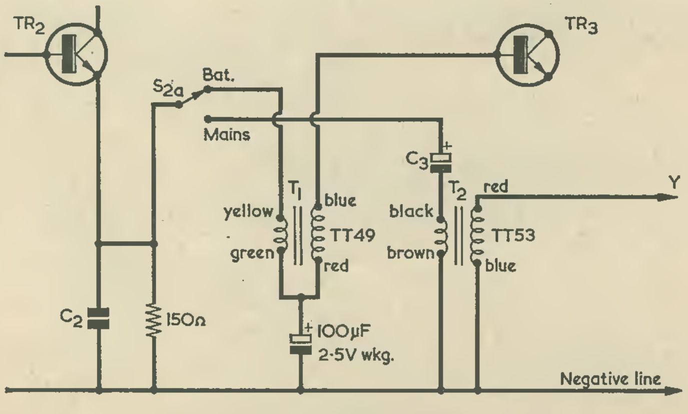

Fig. 7. Circuit changes involved when alternative transformers are employed for T1 and T2

leads being soldered direct to the switch contacts on VR2. They will prevent the mains leads from introducing unwanted signals to the receiver.

ALTERNATIVE TRANSFORMERS

Since this article was written and prepared for publication, it has come to the author's attention that either one or both of the transformers specified in the Components List for T1 and T2 may become difficult to obtain. If the Ardente transformer specified for T2 cannot be obtained, a Repanco TT53 can be used in its place. It is wired up in the same manner except that its brown and blue leads are taken to the negative line, the black lead to C3 and the red lead to contact 'Y'.

Should it be impossible to obtain the TT4 transformer specified for T1, an alternative is the Repanco TT49. This has to be wired in differently, and the circuit changes involved are shown in Fig. 7. Note that two extra components are required, these being a 100μF 2.5V wkg. electrolytic capacitor, and a 150Ω resistor. There are, also, changes to two of the connections to S2(a).

Fig. 7 shows both of the alternative transformers in circuit between TR2 and TR3. If only the TT49 is employed as an alternative, the circuit of Fig. 7 is used with the Ardente D102 in the T2 position. If only the TT53 is employed as an alternative, follow the circuit of Fig. 1 using the TT53 connections just mentioned. ■

SUGGESTED CIRCUIT No. 225

INERTIA SWITCHING CIRCUIT

by G. A. FRENCH

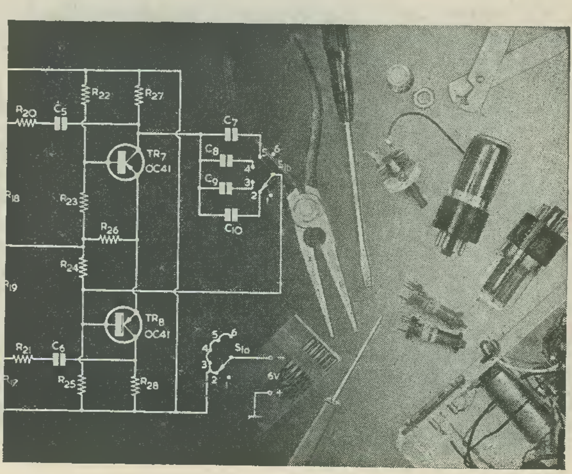

THIS MONTH'S "SUGGESTED CIRcuit" takes advantage of simple inertia - operated switches, which may be very easily made up by the home-constructor. As presented here, the circuit is intended to be assembled in the form of two units coupled together by a length of 3-core flex. One unit comprises a 6 volt battery, a thyristor (or "silicon controlled rectifier"), a 6.5 volt pilot lamp, an on-off switch and a 470Ω resistor. The other consists of a small case housing two inertia switches whose operating directions are at 90° to each other.

When the lamp unit is switched on, the lamp can be made to light up by lightly tapping one side of the inertia switch unit case against any surface (or against the palm of the unoccupied hand). The lamp is then extinguished by turning the inertia switch unit case through 90° and lightly tapping it against the surface once more. This process may be repeated as many times as is desired. When the inertia switch unit case, with the initial orientation is tapped against the surface the lamp lights up; if the switch unit case is then turned through 90° and tapped once more the light becomes extinguished again.

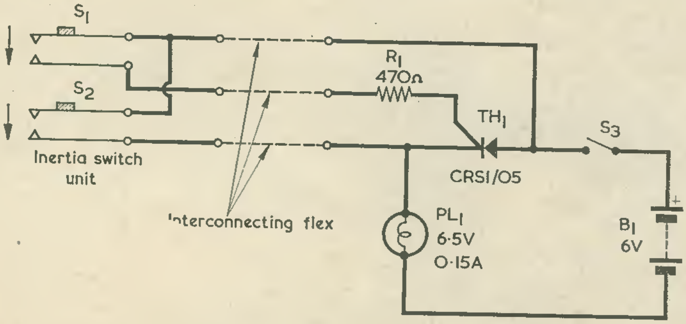

Fig. 1. A simple circuit which illustrates the capabilities of inertia switches

This is a "novelty" application for inertia switches and it is mainly intended to offer an introduction to the performance which they can provide. Nevertheless, the assembly of the simple circuitry involved can be both instructive and amusing, the latter being particularly true if the device is used to mystify electrically-minded friends. In this instance the inertia switches should be completely enclosed within their case, whereupon the friends can be asked to guess what exactly the case contains. The circuit can also be adapted for more useful purposes and two applications which occur to the writer are the switching off of all or part of the electrics in a radio controlled boat if it should accidentally encounter an unexpected obstacle, or in a radio controlled aircraft if it should land heavily or crash. So far as the boat is concerned, an inertia switch circuit could alternatively be employed to cause the boat to go astern automatically when the bow hits an obstacle. As may be gathered, there are quite a number of variations on the basic theme.

THE CIRCUIT

The circuit of the switching device appears in Fig. 1, the two inertia switches being shown as S1 and S2. For the time being it is merely necessary to accept the fact that the contacts of S1 close momentarily when the inertia switch unit case is tapped with the initial orientation, and that the contacts of S2 close momentarily when the case is tapped after having been turned through 90°.

An important component in the circuit is the thyristor TH1. In order that its electrodes may be identified these are named, against the thyristor symbol, in Fig. 2. Fig. 2 also shows the lead-out layout for the particular thyristor specified for TH1.

S3 in Fig. 1 is an on-off switch and, when it is closed, the positive terminal of the battery is applied to the anode of TH1. The cathode of TH1 couples to the negative terminal of the battery via PL1 and, under the existing circuit conditions, the thyristor does not conduct. It can, however, be made to conduct by applying to the gate a firing current from any point which is positive of the cathode. In the diagram this firing current is provided by closing the contacts of S1, whereupon the firing current flows to the gate from the positive terminal of the battery via limiting resistor R1. The closure of S1 contacts need be momentarily only since, once the thyristor has been triggered by the firing current, it remains in the conductive condition. In consequence, lamp PL1 becomes illuminated and stays illuminated.

The thyristor can be restored to its non-conducting state by either disconnecting the battery or by momentarily short-circuiting together its anode and cathode. Inertia switch S2 carries out this second process. When S2 contacts close the anode and cathode are short-circuited, whereupon the thyristor becomes non-conductive. As soon as S2 contacts open again the lamp becomes extinguished and remains extinguished.

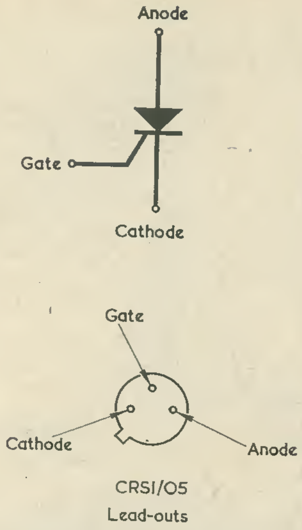

Fig. 2. Identifying the electrodes of the thyristor in Fig. 1. Also shown is the lead-out layout

Thus, with the aid of the thyristor, a momentary closure in S1 causes the lamp to become illuminated, whilst a momentary closure in S2 causes the lamp to be extinguished again.*

THE INERTIA SWITCHES

Inertia switches of the type intended for use in Fig. 1 have the basic construction illustrated in Fig. 3(a). This diagram shows two contact leaves, one of which is made of springy material and has a weight affixed to it. The other contact may be made of similar springy material, but it carries no additional weight. If the mounting base for the two contacts is made to travel in the direction of the arrow and is then caused to stop abruptly, the additional momentum acquired by the weighted contact causes it to swing further in the direction of the arrow than does the unweighted contact, whereupon the two contacts close momentarily, as is shown in Fig. 3(b). The length of time during which the contacts remain closed depends on a number of factors including, in particular, the original velocity of the contact mounting base and the additional mass affixed to the weighted contact. There may, also, be several cycles of contact bounce. The length of contact closure and the presence of contact bounce are of no consequence when the contact set fires or disables a thyristor, since the thyristor condition changes at the initial instant of closing.

An alternative approach to inertia switch contact set design is shown in Fig. 3(c). Here, the contact leaf which moves the greater distance after contact velocity ceases is made springy, whilst the other contact consists of a more rigid material. In this case, the springy contact is displaced by reason of its own mass. A combination of the approaches shown in Figs. 3(a) and (c) can also be used.

So far as the home-constructor is concerned, an extremely simple method of obtaining suitable inertia switches consists of using contact

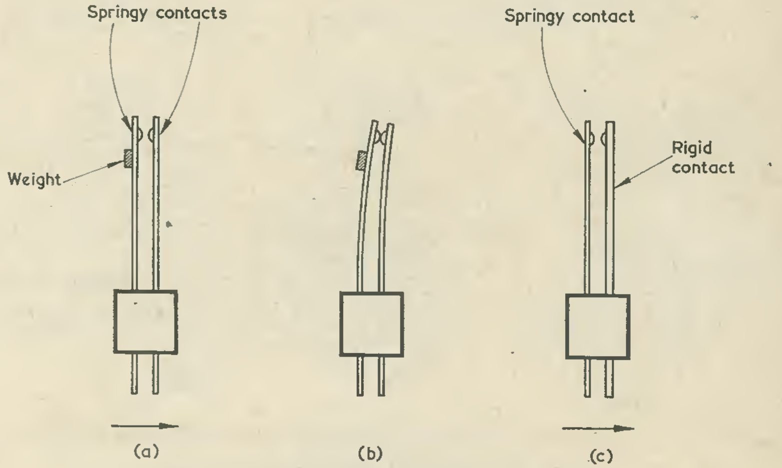

Fig. 3(a). A basic inertia switch
(b). When the velocity of the switch suddenly ceases, the contacts close
(c). An alternative approach to inertia switch design

---

* Regular readers may note that the thyristor is inserted into the lamp circuit by means of a series connection similar to that described in "Suggested Circuit No. 217—Thyristor Alarm Switch", published in the December 1968 issue.

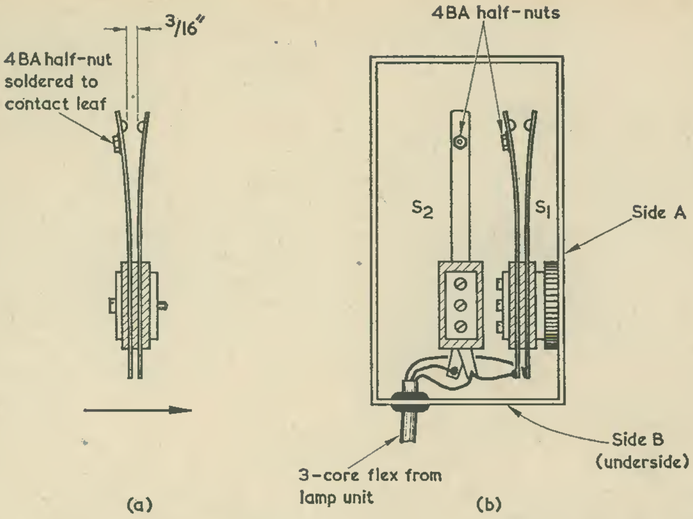

Fig. 4(a). Modifying a contact set taken from a P.O. 3000 relay (b). How the two inertia switches of the prototype were fitted inside the switch unit case. The direction of operation for S2 is away from the reader

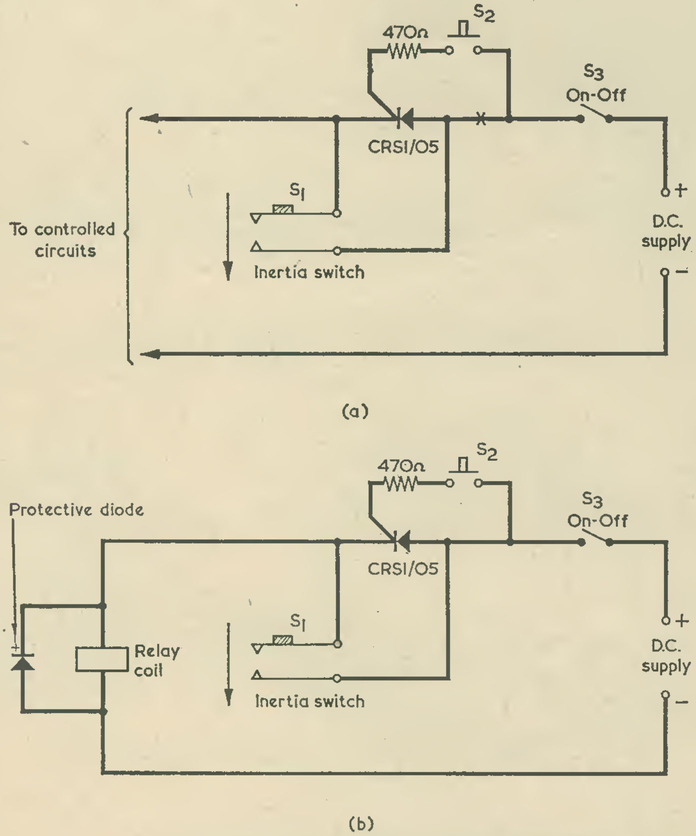

Fig. 5(a). An inertia switch for radio controlled models (b). If the circuit controls a relay, a protective diode must be connected across the relay coil

sets taken from a P.O. 3000 relay. These contact sets offer an excellent choice here because they are already fitted to an insulated mounting base which can be readily unscrewed from the relay yoke and mounted elsewhere, because they employ springy contact leaves, and because the actual contact points are specifically intended to make good electrical contact to each other under arduous conditions.

The writer used two such contact sets in the prototype design, these being modified as shown in Fig. 4(a). The contact sets were initially of the "make" type (i.e. the contacts made when the associated relay energised) and they were carefully opened out so that a gap of 3/16in. was given between contact points. It was found that the extra mass which had to be added to the contact leaf having the greater momentum was surprisingly small, adequate mass being given by soldering a 4BA brass half-nut to the contact leaf as illustrated.

The two modified contact sets were then fitted in a small case as shown, with the cover removed, in Fig. 4(b). As will be appreciated, when side A of the case is tapped against a surface, S1 momentarily closes, causing the lamp of Fig. 1 to become illuminated. The lamp is then extinguished by tapping side B of the case (the underside in Fig. 4(b)) against the surface. With the contact sets modified as in Fig. 4 (a), the circuit was actuated by quite light taps of the case against the surface.

ALTERNATIVE APPLICATIONS

The sensitivity of the switches can be varied by adjusting the spacing between the two contacts and the mass added to the weighted contact. When contacts taken from a P.O. 3000 relay are employed, contact point spacing should be at least ⅛in.

If an inertia switch is required to turn off the electrics in a model aircraft or boat it should be mounted such that it is actuated by a sudden cessation in forward motion. A suitable circuit appears in Fig. 5(a). Here, the thyristor is fired by pressing push-button S2 after the on-off switch S3 has been closed. The thyristor will, then, only become non-conductive if either S3 is opened or if the inertia switch S1 closes. The thyristor specified is suitable for supply voltages from 6 to 24 volts at continuous forward currents up to 1.25 amps. It would probably be advisable to fit a small heat clip for currents greater than 0.5 amp. If the circuit switched by the thyristor has a high value electrolytic capacitor connected across its supply rails, a surge limiting resistor should be inserted between S3 and the anode of the thyristor at the point marked by a cross. This resistor may have a value of 2Ω for supply voltages up to 9 volts, 4Ω for supply voltages up to 18 volts, and 6Ω for supply voltages up to 24 volts.

Should the thyristor be used to energise a relay, the coil of the latter must have a protective diode connected across it to prevent the formation of high back-e.m.f. voltages when it de-energises. See Fig. 5(b). This diode may be any germanium or silicon component having a p.i.v. greater than the supply potential. Care must be taken to connect the diode into circuit with correct polarity as, otherwise, excessive current will flow.

RESULTS WITH THE PROTOTYPE

Returning to the prototype circuit shown in Fig. 1, it was found that this worked completely reliably in the manner already described. The leakage current passed by TR1 in the non-conductive state was 30μA only, whilst the voltage dropped across the thyristor when conductive was 0.7 volts.

As indicated in the diagrams, the thyristor employed is a CRS1/05. This is a small component encapsulated in a TO-5 can, and is available from Henry's Radio, Ltd. The 470Ω resistor, R1, can be a ¼ watt component with a tolerance on value of 10%. PL1 is a standard 6.5 volt 0.15 amp pilot lamp on an m.e.s. base.

■

NEW LOW-COST THYRISTORS

An important extension to the range of thyristors offered by ITT Electronic Services is the new, low-unit-cost type BRY from S.T.C. Semiconductors.

The BRY 42, BRY 43 and BRY 44 are 1A thyristors designed for consumer applications. Voltage ratings of 250V, 400V and 500V are available. They are robustly constructed in a new low-line tab package suitable for mounting to a convenient surface, preferably a heat sink.

Prices commence at a unit cost of 8s 6d for hundred-up quantities. Available ex stock from ITT Electronic Services, Edinburgh Way, Harlow, Essex (Harlow 26777; telex 81146).

NEWS . . . AND .

NEW ELECTRONIC MULTIMETER

The Comark portable Electronic Multimeter Type 1231, is an accurate, high sensitivity instrument which has high input impedance and wide bandwidth. It has more than 70 different measurement ranges and readings are clearly indicated on a robust 5 in. meter.

The overall accuracy of the 1231 is ±2% of f.s.d. for d.c. measurements and ±3% of f.s.d. for a.c. measurements over a bandwidth from 10Hz to 100kHz (3Hz to 250kHz for −3dB). Voltage sensitivity is from 1mV f.s.d. to 300V in 12 ranges, with an input resistance of 1MΩ/Volt at d.c. The maximum current sensitivity is 1μA f.s.d. with a meter volt drop of less than 12mV. Resistance is measured to an accuracy of ±5% of reading from 1Ω to 100MΩ and greater accuracy (±2%) may be achieved using the linear ohms ranges. Centre-zero operation may be selected on all d.c. ranges, providing facilities for use as a galvanometer or differential voltmeter.

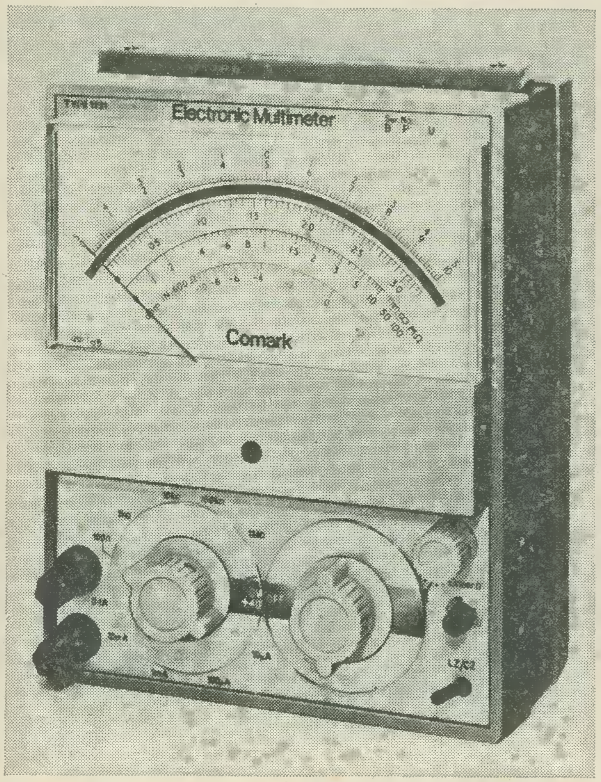

Powered by dry cells, the Multimeter has no power lead or earth current problems. U.K. list price £50.

Manufactured by Comark Electronics Ltd., Brookside Avenue, Rustington, Sussex.

1969 S. G. BROWN AWARD

The equipment which enabled television viewers in Britain and Western Europe to receive live colour transmissions from the Olympic Games in Mexico City has gained for inventor Robin Davies of the BBC Research Department the Royal Society's S. G. Brown Award and Medal for 1969.

Known as the field-store standards converter, the system provides signals conforming to the European 625-line 50-field PAL colour system which are derived from the American 525-line 60-field NTSC colour system. It is only by using a standards converter that international exchanges of live TV programmes and videotape recordings can be made.

Mr. Davies was born in 1935 and was educated at Chichester High School, Sussex. He went up to Merton College, Oxford, and graduated in 1956 with a first class honours degree in mathematics.

After spending two years with Decca Radar he joined the BBC Research Department, Kingswood Warren, Tadworth, Surrey as an assistant to the mathematical consultant in 1958. However, Mr. Davies showed an increasing interest in electronics, and in 1962 transferred to the television group (now called the electronics group).

By 1964 he had proposed a solution to the problem of converting one television standard to another in the extreme case where the picture repetition rate of the two standards differed as well as the number of scanning times. His invention was developed by a team in which he played a leading role and culminated in the development of the field store standards convertor.

The Award and Medal will be presented to Mr. Davies by a representative of the Royal Society at the Institution of Electrical Engineers on Thursday, 9th October, 1969, on the occasion of the inaugural address of the newly installed IEE President for 1969-70 Session, Mr. D. Edmundson.

PRE-ELECTRICAL RECORDING

"I stood on a platform on wheels in front of a gigantic horn, and when I came to the top notes they had to wheel me back about 25 ft. away from the horn, so that my voice didn't shatter the recording instruments". — Opera singer the late Florence Austral, recalled in a tribute broadcast by the BBC.

. . . COMMENT

ELECTRONIC BROKERS LTD. MOVE TO NEW PREMISES

A section of the special exhibition recently held by Electronic Brokers Ltd. in their new showrooms

Electronic Brokers Ltd., specialists in low cost electronic and scientific test equipment and components, have moved to larger premises at King's Cross, London, N.W.1.

The new premises at 49-53 Pancras Road, incorporate a 5,000 sq. ft. warehouse, and a 1,000 sq. ft. showroom, where a large variety of equipment is on permanent display.

To mark the opening of the new premises, the company recently staged a special one week exhibition of new and overhauled equipment in the showroom. Visitors from all parts of the United Kingdom and Europe were able to view Britain's first Electronic Supermarket, where everything from a computer to a valve was on sale at highly competitive prices.

Said Electronic Brokers' Managing Director, Peter Fraiman: "Since the company was formed 12 months ago, we have outgrown our premises at least four times. Demand for low cost electronic and scientific equipment, particularly from Universities and Research Organisations has increased enormously. Delay in supplying new equipment, and rising prices has caused a boom in our type of business. Because we can supply equipment from stock, we are able to meet this need".

RADIO & TV SERVICING JOBS OPEN TO YOUNG PEOPLE

The Department of Employment and Productivity has produced a guidebook* on careers in radio and television servicing.

The booklet says that most homes contain radio and television and in many cases a record player and tape recorder. It is essential, therefore, that adequate repair facilities are available, and, with such a vast field to cover "there are excellent prospects for the keen young man who has the aptitude for the job, applies himself wholeheartedly to learning it thoroughly and is prepared to keep abreast of current developments.

"Prospects are not limited to servicing only; those with ability who extend their knowledge through further study and training may qualify for executive and administrative posts."

It is pointed out that there are jobs with airways corporations—radio mechanics and technicians are responsible for the maintenance of radio receivers and transmitters, weather radar sets, direction and position finding equipment and a wide range of electronic safety and navigational aids. There are also jobs with independent and multiple retailers, with the Service organisations, with manufacturers' servicing departments, rental and relay companies, the radio and television organisations and Government Departments.

There are openings for girls—on production, sometimes with servicing, and semi-skilled work.

The booklet is amply illustrated with photographs showing the branches of the work.

*Choice of Careers Booklet No. 66—Radio and Television Servicing. H.M. Stationery Office, price 1/9.

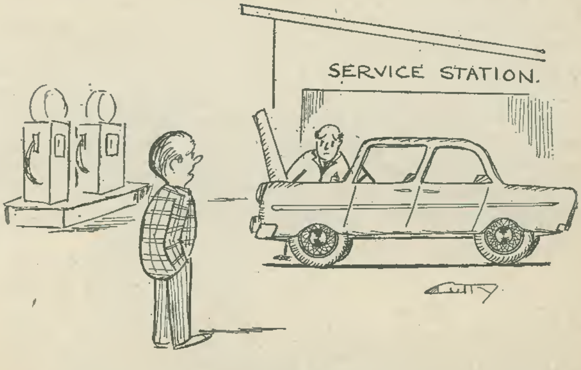

"The valves gone! Blimey haven't they transistorised these things yet?"

TRANSISTOR AMPLIFIER FOR BATTERY OR MAINS

by

G. W. SHORT

This high-efficiency low-distortion transformerless audio amplifier can be used either as a 2-watt battery-operated circuit with low standby current running from an 18 volt supply, or as a 4-watt mains amplifier operated from a 24 volt supply. For many purposes it is suitable for use without a pre-amplifier

THE CIRCUIT OF THE AMPLIFIER TO BE DESCRIBED is shown in Fig. 1 and, although it may look a little odd to some readers, it is rapidly becoming one of the standard arrangements. There are four very good reasons for this. First, it is tolerant of gain variations in the transistors. Second, it achieves just about the maximum possible efficiency. Third, it can be easily designed to have a fairly high input impedance (around 50kΩ), which means that radio tuners and high impedance dynamic microphones can drive it directly, without a pre-amplifier. (The sensitivity is also right for this kind of usage.) Last, but not least, it is economical of components.

CIRCUIT OPERATION

The input transistor TR1 is a low-noise silicon planar type and operates here at a low collector current of around 100μA. It is direct-coupled to the driver, TR2, this being a high-gain silicon n.p.n. type (BC168). TR2, in turn, is direct-coupled to the output stage, which comprises a complementary matched pair of germanium transistors, AD161 and AD162. These are small power transistors especially designed for the job. They operate in class B push-pull, and one of their particular virtues is that they have a reasonable gain at low collector currents (a few milliamps). This means that the standby current can be reduced, an important factor in battery amplifiers. The small current needed to combat crossover distortion is set up by the bias voltage which appears across the germanium gold-bonded diode, D1.

Readers who have experimented with direct-coupled multi-stage amplifiers will realise that it is asking for trouble to use this technique unless something is done to stabilise the d.c. conditions. Any small departure from the correct current in the first stage is amplified many times by the following stages and the end result is that the current in the last stage varies wildly.

This trouble does not occur in the present circuit, for two reasons. First, the input stage uses a silicon transistor. Silicon transistors have very small collector-base leakage currents, so small that at room temperatures they are almost negligible, and this fact greatly reduces "drift". Secondly, the circuit incorporates 100% d.c. negative feedback, which effectively reduces the d.c. voltage gain to 1. In fact, the first and second stages form the amplifier part of a sort of stabilised voltage supply which keeps the "output voltage" (i.e. the direct voltage at the emitters of the output transistors) at half the supply-line voltage. This permits equal swings of the output voltage (the a.f. voltage this time) which is what is needed for maximum undistorted output.

The desirable state of affairs just described is brought about in the following manner. The base voltage of the input transistor is set at a fixed fraction of the supply voltage, and it stays put at this voltage irrespective of the gain and collector current of the transistor, or the temperature. The base voltage is the "reference voltage" of the voltage-stabiliser just referred to. Note that it is not a fixed voltage in the strict sense, but only a fixed *fraction* of the supply voltage. To use a fraction of the supply voltage is desirable, because what is needed is to fix the emitters of the output pair at half the supply voltage, *whatever this may be*. The supply voltage will always vary a bit as, say, the battery runs down, but by adopting the "sliding" reference voltage scheme the circuit not only copes with this small change, but will operate with quite a large range of supply voltages. The prototype worked at 6 to 25V, though operation at the lower voltage is not of much interest since the power output is then very low.

The emitter of TR1 is taken to the emitters of the output pair. Any variation of voltage at the output therefore causes the emitter current of TR1 to increase or decrease. The resulting change in the collector current of TR1 is passed on to TR2, which amplifies and phase-inverts it, and thence to the output, where it arrives with the right polarity to counteract the original variation.

The reference voltage at the base of TR1 is set by the resistance chain R2, R3 and R4. The current which flows through these resistors is much larger than the base current of TR1, so any variations in voltage which might arise from the variations in base current of different samples of the same transistor type are swamped, and the circuit will work with any sample. The reference voltage is not exactly half the supply voltage, because allowance has to be made for the base-emitter voltage of TR1 and the drop across R6.

SIGNAL-FREQUENCY FEEDBACK

Readers may be wondering why R6 is needed at all. Why not just connect the emitter of TR1 directly to the output emitters? The most obvious reason is that C3 would then partially short-circuit the output by connecting all a.c. voltages directly to the negative rail via R7. But, of course, C3 could also be omitted, so this is not much of an objection. Or is it? If C3 were indeed left out, the whole of the a.c. output voltage of the amplifier would also be fed back negatively to TR1, and this would reduce the gain of the amplifier to 1!

The purpose of R6 is now clear. It forms, with R7, an a.c. potential divider which reduces the a.c. negative feedback.

If R7 were left out and C3 connected straight down to the negative rail, the gain would be maximised and, with typical transistors, would probably be between 1,000 and 2,000. Most constructors are inclined to try to obtain the utmost gain from their amplifiers, but in practice this is seldom a wise course. What is needed is consistent, highly predictable gain, and low distortion. Both are obtained by introducing plenty of negative feedback.

In the present case, with R6 a hundred times larger than R7, the gain is stabilised at about 100. This is a perfectly usable amount of amplification, not too little and not too much. (It can be varied if need be by changing R7; values less than 10Ω or more than 100Ω are not recommended, however, unless the constructor has the means of measuring the resultant effects on the frequency response.)

COMPONENTS

(Fig. 1)

Resistors
(All resistors ¼ watt 5%)

R1	1kΩ
R2	39kΩ
R3	100kΩ
R4	100kΩ
R5	10kΩ
R6	3.3kΩ
R7	33Ω
R8	22Ω
R9	1kΩ
R10	33Ω

Capacitors

C1	0.22μF paper or plastic foil, 250V wkg.
C2	50μF electrolytic, 25V wkg.
C3	250μF electrolytic, 16V wkg.
C4	0.01μF paper or plastic foil, 250V wkg.
C5	1,000μF electrolytic, 16V wkg.
C6	10μF electrolytic, 30V wkg.

Semiconductors

D1	OA5, or similar gold-bonded germanium diode	
TR1	2N4058	
TR2	BC168B or BC168C	
TR3	AD161	matched pair
TR4	AD162	

Switch

S1	s.p.s.t. toggle

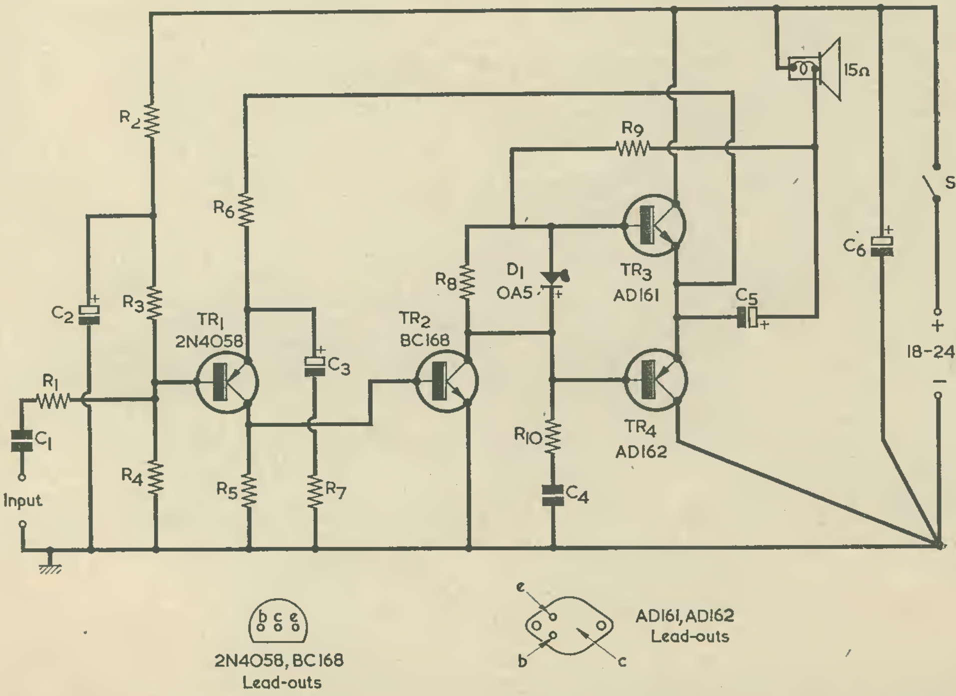

Fig. 1. The circuit of the transistor amplifier. This may operate from an 18V battery or 24V mains supply

The input voltage needed for full output is very easily estimated, once the gain is known. The first step is to estimate the peak output voltage. This is just half the supply voltage, because the emitters of the output stage are at half the supply voltage, and can only swing down to zero or up to the full supply voltage, giving half-supply-voltage negative and positive peaks. Let us assume a supply voltage of 18. With this supply, the output is 9V peak. Since the gain is fixed at 100 by the negative feedback, the input voltage must be a hundredth of the output; i.e. 0.09V or 90mV. This is the peak signal input voltage. The corresponding r.m.s. sine-wave input is 63mV. These figures show that the amplifier is fairly sensitive. The usual sources of a.f. signals produce 1mV to 1V, so it would appear that at least some of them should be able to drive the amplifier fully without any pre-amplification. Before we can be certain of this point, however, we need to know the input impedance of the amplifier. If it were too low, the signal source might be so badly mismatched that it could not deliver its rated output.

The input impedance can easily be estimated, thanks once again to the use of a large amount of negative feedback. The effect of the particular feedback arrangement used here is to increase the apparent input impedance of TR1 so much that to a first approximation TR1 can be said to approach infinite input impedance. The only impedances across the input are then R3 and R4, which are in parallel as far as a.c. is concerned. Thus the input impedance is 50kΩ to a first approximation. The input impedance of the prototype amplifier was measured at 40kΩ, which shows that the approximation is quite good enough for most purposes.

Several a.f. signal sources can deliver the required voltage of about 60-70mV r.m.s. to about 40kΩ; e.g. high impedance dynamic microphones, radio feeder units, and some dynamic pickups. Crystal pickups are in a rather different category. The usual cheap high-output types produce about 1 to 2V into an infinite load, but need a load of around 1MΩ or more if anything like their full output potential is to be obtained, and without loss of bass response. Fortunately, only a small fraction of the full pickup output is needed with this amplifier, and so it is possible to use a high-output crystal pickup by inserting a high resistance in series. The correct value has to be found by trial and error, but there is a very easy way of taking the effort out of this process. It is simply to put a high-resistance volume control ahead of the amplifier and use this with all inputs, whatever their impedance. The correct setting for the crystal pickup is then found automatically when the volume is adjusted. This, of course, is not an approach to the problem which will satisfy hi-fi addicts, but the writer has tried it in practice with a 2.5MΩ control, and it works! Hi-fi addicts will undoubtedly not be satisfied until they have built a pre-amplifier with proper equalisation, anyway.

BATTERY ECONOMY AND EFFICIENCY

It might be thought that battery economy and efficiency go hand in hand, but this is not so. The best way to reduce battery consumption in a class B amplifier is to cut down the idling current (standby current), because even when fairly loud speech or music is being reproduced the amplifier is without input signals for a lot of the time (during the intervals between words, etc.). When it is being driven, of course, there is no way to reduce consumption except to turn down the volume.

It so happens that the circuit arrangements which make for minimum standby current are usually the ones that are not very efficient, so we can have efficiency, or we can have low standby current, but unless something rather complicated is envisaged, we can't optimise both at the same time.

This fact is made clear when the possibilities for reducing the current through each stage in turn are considered. We can dismiss TR1 at once. It only passes 100μA anyway. When we look at TR2 we find that we cannot tell how much current it must pass until we know something about the output transistors. How much base drive do TR3 and TR4 need? TR2 has to drive the output pair during both the negative and positive half-cycles of the signal, so it must operate in class A. In fact, the d.c. collector current of TR2 must be at least equal to the peak base drive current needed for the output pair. This in turn depends on the gains of the output transistors (the higher the gain the lower the drive), and it also depends on the loudspeaker impedance and the supply voltage.

The starting point for the design, so far as standby economy is concerned, is the peak output current. This is just half the supply voltage divided by the load impedance, and with an 18V supply and 15Ω load it works out at 600mA. The peak base drive to TR3 and TR4 is therefore 600mA divided by the gain. In this context "gain" means the large-signal current amplification factor hFE measured at a collector current of 600mA. If hFE were 10, then the peak base drive would be 60mA and the collector current of TR2 would have to be at least 60mA. This makes it quite clear that for low standby current in this type of circuit the output transistors must have high hFE. If hFE were increased to 100, the driver need only pass 6mA, which is a much more attractive proposition than 60mA. The AD161/AD162 complementary pair specified for this amplifier has hFE up to several hundred, but this is quite irrelevant. What matters is the *minimum* hFE, since the amplifier has to be able to deliver full power even with the lowest-gain transistors. Readers may see hFE figures as low as 30 quoted for AD161/AD162, but it is quite easy to obtain pairs with minimum hFE of 80 (this is the low limit for Mullard transistors, for example), and this figure is taken here. The makers quote hFE at a collector current of 500mA, which is near enough to the design figure not to make much difference. In any case 600mA is a theoretical limit, not quite attainable in practice, because the collector voltage of TR2 cannot swing right down to zero. When allowance is made for this and one or two other limitations, 500mA becomes a more realistic figure.

The peak base drive to the output pair is, then, 500 divided by 80 or approximately 6mA. In practice, however, not quite all the collector current swing of TR2 passes into the output pair. Some is lost in R9, and to allow for this and component tolerances the collector current of TR2 is set at just under 9mA by suitable choice of R9. There remains the quiescent current of the output pair. This must not be too low, because at very low currents the output is reduced and a form of crossover distortion can occur even though TR3 and TR4 are not biased beyond cut-off. A quiescent current of about 3mA is enough to reduce this effect to negligible proportions with the AD161 and AD162.

The total standby current is thus about 12mA. It will vary from circuit to circuit unless R8 is selected each time. R8 bypasses a little of the bias current through D1 and so acts as a fine control on the bias voltage. If R8 is replaced by a 50Ω preset variable resistor, the quiescent current can be set exactly, or even reduced a little. Bearing in mind the fact that a 2-watt output calls for big batteries anyway, it is doubtful whether this is worth the trouble. The standby current is not likely to exceed 15mA even with an unlucky combination of components, and the battery ought to be able to stand this drain.

Turning now to the question of efficiency, the vital need in these transformerless circuits is to get as large an undistorted output voltage swing as possible. The reason is simple enough: power is proportional to the square of the voltage, so a mere 30 per cent reduction in voltage cuts the power to half.

The output pair acts as a compound emitter-follower with a gain of 1, so the output voltage cannot exceed the voltage provided by the driver, TR2. This must be maximised. One limiting factor is the "knee" voltage of the transistor. The transistor cannot work with a collector-emitter voltage less than this, so it is important to choose a type having a low "knee" voltage. With the BC168, the "knee" voltage at Ic=18mA (the peak collector current in this circuit) is typically 200mV. This means that the effective value of an 18V supply voltage is reduced to 17.8V, so the voltage swing at the collector is reduced 100mV in each direction. This is not the only loss, however. A much more serious one is the base-emitter drop of the output transistors, which reaches about 650mV peak. A further 200mV or so is wasted in the bias diode, so altogether the peak output voltage is roughly 1V less than it would be with perfect transistors having no losses.

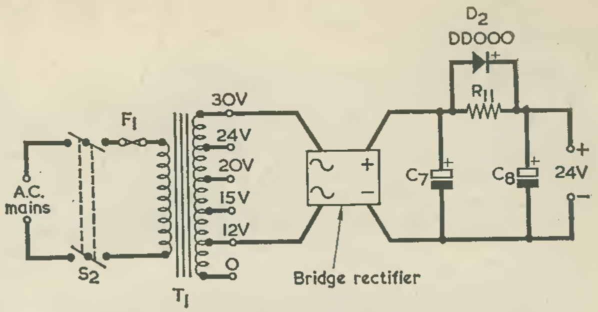

Fig. 2. A suitable mains power supply unit. The value of R11 may require adjustment, as described in the text

COMPONENTS

(Fig. 2)

Resistor
R11 22Ω, $\frac{1}{4}$ watt 5% (see text)

Transformer
T1 Mains transformer, Douglas type MT.112AT (G. W. Smith & Co. (Radio) Ltd., 3-34 Lisle St., London, W.C.2)

Switch
S2 d.p.s.t. toggle

Fuse
F1 500mA cartridge fuse and holder

Diode, Rectifier
D2 DD000 or similar silicon diode
Bridge rectifier: type B30 C700/450 (Amatronix, Ltd.)

TABLE

PERFORMANCE DATA

Power output: 2 watts r.m.s. (18V operation)
4 watt r.m.s. (24V operation)
Voltage gain: 100 (40dB)
Input impedance: 40kΩ
Load impedance: 15Ω
Distortion: 10% approx. at full output (2% at 1.5 watt with 18V supply, and at 3 watt with 24V supply)
Frequency response: −3dB at 30c/s and 50kc/s
Standby current: 12mA (18V); 20mA (24V)
Noise: −66dB below 2 watt

Readers will have seen amplifier circuits employing "intermediate drivers" between the main driver and the output stage. These circuits have the advantage that the intermediate drivers can operate in class B, with very little quiescent current. Since the first driver need only provide enough base drive for the intermediate ones, its collector current can be reduced to 1mA or so. Unfortunately, by introducing the intermediate driver stages extra base-emitter voltage drops are placed between the driver proper and the output, and also much more d.c. bias voltage is needed for the combination, since both the intermediate drivers and the output stage need biasing. All these add up to a very serious loss of output voltage (perhaps 3V), and of course the efficiency of the amplifier as a whole suffers. This is not only bad in itself, but it means that for a given power output more power is dissipated in the transistors, which aggravates the cooling problem. In the present design the overall efficiency in terms of a.c. output and total d.c. input is 60%, which compares favourably with the usual figure of around 50% for this type of circuit. Higher efficiency is obtained if the amplifier is over-driven so that some degree of limiting occurs, but the effect on quality is bad.

The main performance data are given in the accompanying Table. A detail not included in the Table is concerned with power consumption at full output. For sine-wave drive and full output, current consumption is approximately 170mA for 2 watts output from the 18V supply and approximately 250mA for 4 watts output from the 24V supply. However, on typical speech and music inputs these currents may be divided by three, the lower currents being those at which transient peak clipping becomes apparent. Thus, for ordinary "programme" inputs the drain on 18V is about 60mA at full output and on 24V it is about 80mA at full output.*

CONSTRUCTION AND TESTING

The same circuit is used for both the 18V, 2 watt battery version and the 24V, 4 watt mains version. The output transistors AD161 and AD162 are mounted on a common heat sink made from a rectangle of ⅛in. aluminium sheet measuring 4½ x 2¾in. (The exact shape is unimportant provided that long, thin heat sinks are avoided, and provided that the area is at least as great). The AD161 is mounted directly on the heat sink, with no insulating washer (this puts the sink at the potential of the positive rail), and the AD162 is insulated with the usual mica washer and bushes for the bolts. Two separate heat sinks may also be used, as may any size large than that just mentioned. If operation in warm surroundings is contemplated, insert a resistor of about 0.5Ω in the emitter lead of each output transistor. The exact resistance is not important. Up to 1Ω can be used without serious loss of output. It is, however, important that the two resistors should be equal in value.

The rest of the circuit can be built up on any of the usual baseboards, the cheapest being a piece of hardboard or plywood with pins knocked in to form anchorage points for the components. (This form of construction need not be nearly as crude as it sounds!)

The following hints should be borne in mind.

1. Use thick wire for the negative rail and keep the negative connections short. If possible, run separate negative leads straight to the battery from the high-level and low-level parts of the amplifier, as indicated in Fig. 1. Use a single-pole on-off switch, with the contact in the positive supply lead. (All these precautions are designed to prevent instability due to coupling between output and input caused by small amounts of wiring impedance in the earthy side of the supply. This is a common fault in transistor power amplifiers, and destroys more output transistors than anything else.)

2. Keep the output wiring (speaker leads, etc.) clear of the input. If possible, use screened input leads, with the screening connected to the negative rail of the low-level part of the circuit; e.g. the negative tag of C2.

3. If an actual earth connection is used, this too should be made to the input part of the amplifier (or the pre-amplifier if one is used).

4. For 24V operation, loads (speakers) of less than 15Ω must *not* be connected, except via a matching transformer which presents 15Ω to the amplifier. Loads of more than 15Ω may be used. With an 18V supply it is permissable to use loads down to 8Ω, whereupon the output power increases to about 3 watts maximum.

5. If a meter is used to check the supply current, connect it in the *positive* lead, between the battery and C6.

6. If a pre-amplifier is used, supplied by the same source as the main amplifier, insert a decoupling network between the two. This will consist of the usual series resistor with parallel capacitor across the pre-amplifier. The value of the resistor depends on the pre-amplifier design, and the parallel capacitor should be some 50 to 500μF. It is unlikely that a pre-amplifier gain of more than 100 will be needed.

MAINS POWER UNIT

A suitable power unit for the mains version is shown in Fig. 2. The mains transformer is a Douglas type MT.112AT having a tapped low voltage secondary rated at 500mA. The 12V and 30V tappings are used here, to provide 18V a.c. for the rectifier. The usual precautions should be taken with the mains wiring.

It is important not to apply too much voltage to the amplifier, since the transistors are now operating near the limit of their collector-emitter voltage rating. The constructor is strongly advised to test the output voltage of his power unit before connecting it to the amplifier. To do this, connect a 1.2kΩ resistor across the d.c. output of the power unit to simulate the amplifier quiescent current (20mA for a 24V supply). The output voltage should not now exceed 28V. If it does, disconnect D2, and increase R11 until the right voltage is obtained. Then replace D2 by two or more silicon diodes in series, one for each 0.5V dropped across R11 when the amplifier is quiescent; i.e. when the current drawn is 20mA.

The power unit shown in Fig. 2 can supply two of the amplifiers of Fig. 1 for stereo, if desired. In this case, C7 and C8 should be doubled in value and R11 halved. The check for d.c. output voltage before use is then carried out with an external resistance of 620Ω (to simulate 40mA quiescent current) before actually connecting up the amplifiers.

The amplifier may, of course, be supplied by a mains power unit which gives less than 24V. Operation down to 12V is feasible, with reduced power output.

■

---

*Transistors type AD161 and AD162 are available in matched pairs from Amatronix Ltd. After carrying out further work with the circuit, the author informs us that transistor type 2N4289 may be substituted, if desired, for the 2N4058 listed for TR1.—Editor.

THE POSISTOR

We are informed by Messrs. Electronic Materials Ltd. of Fossway, Newcastle-upon-Tyne, 6, that they have now taken over the manufacture of these devices. The trade name 'posistor' has been discarded in favour of 'ptc thermistor' or 'positive temperature coefficient thermistor'.

'The Posistor' was published on page 693 of our June issue.

FOR THE BEGINNER . . .

CHASSIS METALWORK

by

FRANK A. BALDWIN

This article deals with the preparation of a chassis prior to the securing of the main components into their respective positions. The methods used by the writer may be followed by the beginner – for whom this article has been specially written – and carried through to completion as described here. The beginner will find, in these paragraphs, several hints and tips that will be of assistance to him during his first session of chassis preparation

CHASSIS PREPARATION — OR "chassis bashing" as it is more popularly termed—is usually regarded by the beginner to home construction as something of an onerous task. This need not, however, be the case provided a logical sequence is followed and the correct tools for the job are obtained.

The most commonly used type of chassis in radio work is made of 18 s.w.g. aluminium sheet. Aluminum is malleable and easily worked by the home constructor equipped with a few simple tools.

Some constructors bend up their own chassis from a flat sheet of aluminum but it is more usual these days to purchase a ready-made blank chassis from a component house, several of whom specialise in the supply of metalwork. A glance at the advertisements in this journal will acquaint the beginner with this fact. Blank chassis are supplied off the shelf in a range of standard sizes.

Having obtained the size required for a constructional project together with a front panel and/or cabinet, the first task is to mark out the required measurements on the chassis from the drawing being followed. However, before describing this process, a word is required about the tools which should be used when engaged in a session of "chassis-bashing".

THE TOOLS

The tools required ideally for chassis work are as follows:—a 12in. ruler (transparent plastic for preference); a pencil; a metal centre-punch (ideally of the self-tapping type); a small hand-drill with ¼in. chuck; a set of high speed steel twist drills of the following sizes—1/16, 3/32, 1/8, 5/32, 3/16, 7/32, and 1/4in. (i.e. 1/16 to 1/4in. by 1/32in. steps); a carpenter's brace fitted with a 7/16in. steel twist drill; valve hole chassis cutters for B7G (5/8in.), B9A (3/4in.) and octal (1 1/8in.); and a set of small files (flat and half-round).

Most of the tools mentioned in this article can be obtained from Home Radio (Components) Ltd.—see advertisement opposite Contents page—and are described, together with illustrations, in their latest catalogue.

Additionally, the following materials will be of great use once drilling has been completed. A supply of lighter fuel, some clean waste rag and an aerosol cellulose spray of a colour to the individual choice.

These, then, are the basic requirements for "chassis-bashing" if both ease of working and a satisfactory result are to be achieved. Also, it is ideal if the beginner owns or has access to a workbench fitted with a vice. If a vice is to be purchased, the writer would recommend a carpenter's type (Record No. 50 is ideal). This type of vice can be made very versatile when fitted with two blocks of wood sized 6½in. x 5in. x ½in. The wood blocks can be placed between the vice jaws temporarily when marking and drilling a chassis, the latter being gripped between the blocks, thereby avoiding

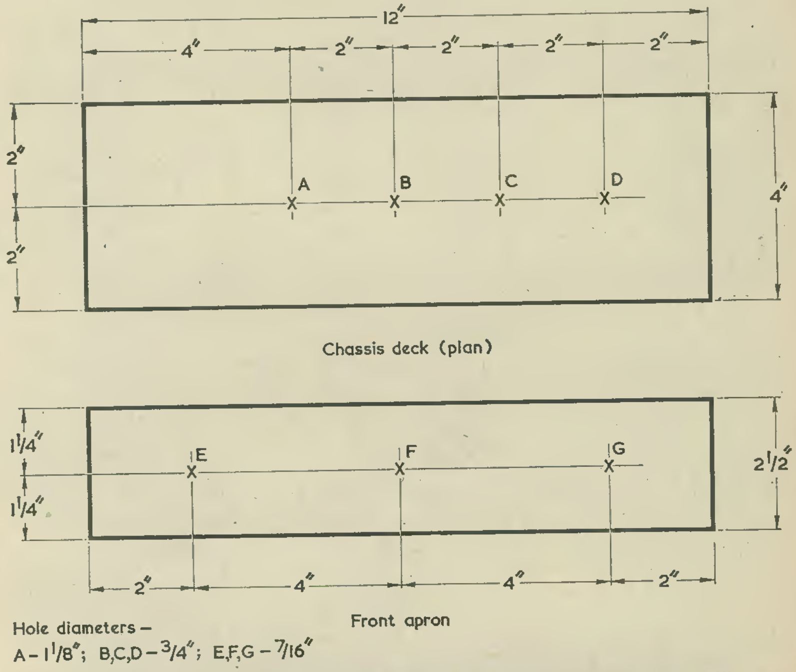

Chassis deck (plan)

Front apron

A typical chassis drilling diagram with which the beginner will soon become familiar and learn to work from. In this example, the chassis is for a three-valve audio amplifier any unsightly scratch marks that would otherwise result. A set of wooden blocks of differing sizes may be used according to the size of chassis being dealt with, either the chassis front, rear or side aprons being gripped according to the requirements of the job in hand.

MEASURING AND MARKING THE CHASSIS

Most beginners, when working on their first chassis, will be following a published drawing such as that shown, as an example of what is required, in the diagram. This drawing represents the chassis drilling details for a three valve amplifier and can be related to the illustration showing the chassis before and after drilling has been completed.

The first necessity is to mark the various drilling points shown in the diagram on the chassis deck using the ruler and pencil, and with the chassis firmly gripped between wood blocks in the vice. Measure the chassis deck mid-position (2in.) at each end of the deck and draw a pencilled line along the whole length. Next, laying the ruler along this line and working from the left, mark off in pencil the centre points of the four holes A, B, C and D (4in. 2in., 2in., and 2in.). Remove the ruler and mark each hole centre with the centre-punch.

Employing the hand-drill and an ⅛in. drill, drill at these four points. Use these ⅛in. holes as guide-holes and re-drill with the 7/16in. drill fitted to the carpenter's brace. This re-drilling procedure is suggested here since few beginners will have access to a complete range of twist drill sizes to suit all occasions, let alone a drill chuck capable of taking the larger sizes often required. It is for this last reason that the carpenter's brace is recommended.

In our example we shall assume that hole A has a diameter of 1⅛in., and will in practice take, not an octal valveholder, but an upright-mounting dual smoothing capacitor. Components of this nature normally require a chassis hole around 1⅛in. diameter, and a chassis cutter intended for octal valveholders is ideal for making this hole. Holes B, C and D are for three B9A valveholders and are cut out to a diameter of ¾in. Again, a chassis cutter is employed.

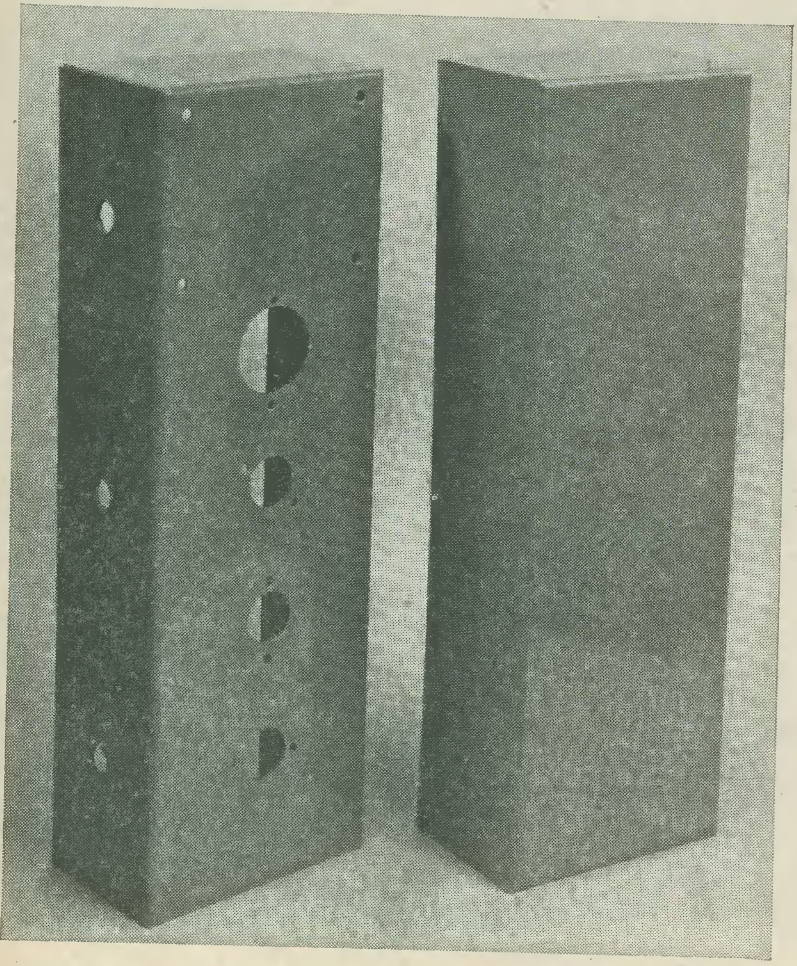
The chassis before and after drilling and spraying

To the left of these holes, on the chassis deck, is a space for a mains transformer. In the illustration four holes are shown in this space and these are intended for securing the transformer into position at a later period of construction. The positions of these holes are ascertained by using the transformer itself as a template. Additional holes to those shown will also be needed to allow leads from the transformer to pass through to the underside of the chassis deck. Such holes must always be fitted with suitably sized rubber grommets to prevent the wires chafing on the sharp metal edges. The desired orientation of the transformer (i.e. which way round it is fitted) should be decided before drilling any of these holes, so as to ensure that primary and secondary leads pass through to the most convenient positions underneath the chassis.

The next task is to find the best orientation for the three valveholders. If this is not indicated in the design to which the constructor is working, he should turn the valveholders experimentally in the holes already cut out to determine the orientation which will give shortest anode and grid wiring. Mark the mounting holes for the valveholders, using the valveholders themselves as templates, centre-punch each hole, then drill them out with a ⅛in. drill for 6BA bolts and nuts. The mounting clip for the dual capacitor will normally have two holes intended for 4BA bolts and nuts. These are marked out on the chassis deck, centre-punched, and drilled 5/32in. diameter.

When all the small holes have been drilled in the chassis deck, the swarf should be removed by rotating a drill of larger size in each of them. This completes the chassis deck drilling in our example and the following task is to deal with the chassis front apron.

The presumed amplifier design for which we are drilling this chassis, entails the inclusion of three controls, these being the on/off switch, the volume control and the tone control. These are fitted to holes E, F and G shown in the diagram.

The front apron should be measured and marked in a similar manner to the chassis deck, a line being drawn along the mid-position of the apron (1¼in.) and the three control hole centres marked with the centre-punch at the measurement points indicated in the diagram. Drill these firstly with the ⅛in. drill and then with the 7/16in. drill. Clean the swarf from the holes with a half-round file passed through them.

It will probably be found that each of the controls has a locating lug for which a second small hole is required in the apron. The lug passes through this hole and its function is to ensure that the control body cannot turn if, later, excessive force is applied to the control knob, or if its bush mounting nut loosens. First fit the bush of each control (with bush mounting nuts removed) into the 7/16in. hole already drilled, orient it so that the tags take up the best position for wiring, then mark the approximate postion required for the lug hole on the *outside* of the apron. The control is then removed and passed through the hole from the outside, and the hole position finally marked off accurately, working from the component itself. In most cases, locating lug holes will lie on the centre line of the apron. The holes are made with a drill whose diameter is the same as the lug width of the particular control concerned.

THE FINAL TASK

The final stage in chassis preparation is a question of individual choice, since quite a few constructors call it a day when the last hole has been drilled! If it is to be carried out, and the process is well worth the effort, this last job consists of cleaning the chassis to remove finger marks, grease and the various pencilled lines, and then finishing off with a colour spray. A suitable spray is given by an aerosol cellulose. The cleaning should be carried out in the open and away from naked lights, using a small amount of lighter fuel and small pads of waste rag. Once the chassis has been cleaned in this manner, it should be gripped between pieces of rag to prevent hand contact, placed in a convenient position, and sprayed with the aerosol cellulose and allowed to dry. Do not stand down wind! Furthermore, if in the open, ensure that rain is not imminent and that there are no dust-laden winds. If the spraying is carried out in a workshop or garage, set the chassis on old newspaper with plenty of the same material as a background unless it is intended to colour the adjacent walls! *Do not spray the chassis underside.*

Once dry, ensure that the underside of the chassis exhibits nothing other than bright aluminium, so that good chassis connections will be given later when chassis tags are secured into postion.

This article has been intended to explain the art of "chassis-bashing". It is really not such a hard job as the beginner might at first imagine. ■

RAF COMPUTERISED SYSTEM — LARGEST IN THE WORLD

The RAF computerised Records and Pay Office system, recently introduced at RAF Innsworth near Gloucester, is the largest and most technically advanced of its kind in the world.

Completion of the system was formally marked by Air Marshal Sir Andrew Humphrey, Air Member for Personnel, of the Air Force Board, who fed into the computer the last batch of basic data required for the enormous magnetic files on which the system is based. These file records relate to the personnel and pay of 100,000 airmen and airwomen and some 20,000 officers, and also to those of the RAF reserves. They are also used to keep track of manpower allocation in every RAF unit and for production of a large number of statistical analyses.

Personnel records for the Royal Air Force relate to every aspect of the individual from religion to domestic affairs. There are, for example, 186 different types of entry relating to pay alone. Among the documents produced by the system are weekly payrolls for every unit in the UK and overseas.

To handle work like this, a computer must be fast, have a big internal memory capacity and be equipped with high-speed random access files. These files, in the RAF's "UNIVAC 1107" system, are big magnetic drums which revolve so fast in their hermetically sealed cabinets as to appear to be stationary.

The design of these drums, the way information is recorded on them and the manner in which computer programs are constructed enable the computer to retrieve within a tiny fraction of a second any part of any record; and, when necessary, to rewrite it in amended form on the drum at the same high speed. A special building was designed and erected at Innsworth to house the computer and the scores of RAF technical men and women associated with it. The computer area is temperature and humidity controlled, free from vibration and air contamination and is surrounded by offices and storages areas.

Cover Feature

MINIATURE OSCILLOSCOPE

by

R. STARKSFIELD

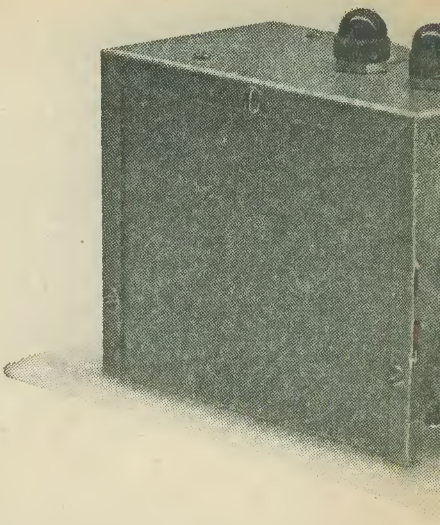

This tiny instrument has been made possible by the omission of some of the circuits normally associated with oscilloscopes, together with the use of an extremely simple timebase. The design is primarily intended for the more experienced constructor who is capable of devising his own wiring layout. By dint of winding the mains transformer and using mu-metal screening, the author built the prototype within a case measuring 3in. x 4in. x 5in.; but, even without these two aids to miniaturisation, units built up to the circuit need only be marginally larger in size

THIS SMALL SCOPE WAS BUILT TO ENABLE TRACES TO be examined in the alignment and repair of radios and amplifiers. Some people prefer to work with an oscilloscope as it shows distortion and its causes more readily than is possible when judging by ear. This oscilloscope is, as can be seen from the diagrams, within the 'scope' of most people who have had some experience in the field of electronics.

Although the tube is only 1 inch in diameter, this is sufficient for most purposes.

The Y amplifier is capable of a respone from 5Hz to 150kHz ± 3dB, the useful response including 465kHz. 2V peak-to-peak input at OdB attenuation fills the screen from top to bottom.

The timebase generator provides sweeps from 30Hz to 150Hz. There is also an X input for examination of Lissajous figures.

The prototype measures only 3in. by 4in. by 5in., and is easily carried around and used for on-site repairs. It was decided to simplify the normal circuitry considerably, doing away with sync., brightness, focusing and astigmatism controls. There are two preset controls, one for X gain and the other for trace linearity.

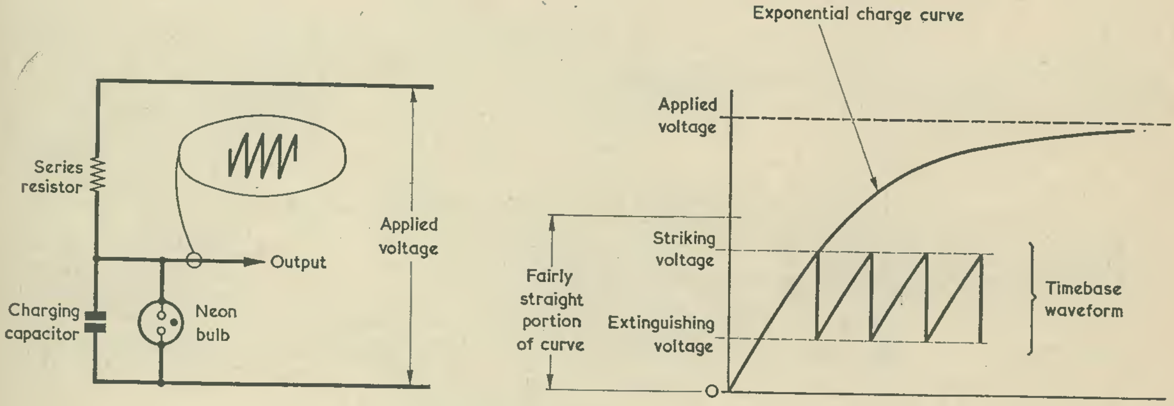

(a)

(b)

Fig. 1(a). The basic neon relaxation oscillator

(b). Illustrating the relationship between applied voltage and linearity of the sawtooth waveform produced by the neon oscillator

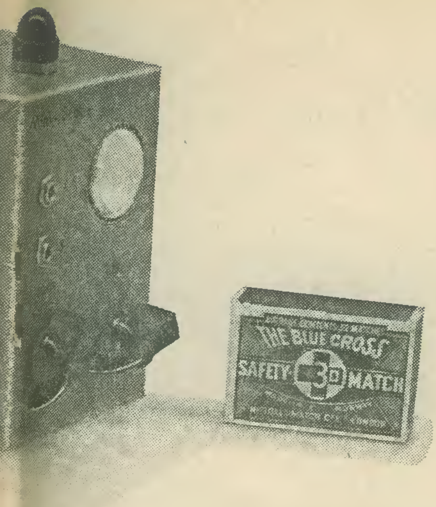

It was at first planned to transistorise the unit. However, as the tube heater took 0.3 amp and some form of e.h.t. supply would be required, this would make a heavy drain on a battery. If, therefore, a mains supply was to be used, why not employ valves? There seemed little point in using transistors just to 'transistorise' the design.

THE CIRCUIT

Since audio frequencies only were to be examined, it was decided to use a neon relaxation oscillator for the timebase. Although the Miller sawtooth generator is best for this application, to use it to its full benefit one would really need a larger tube.

A neon relaxation oscillator is very simple to build and, with careful selection of the neon, can provide a very linear sawtooth waveform. The operation of the neon relaxation oscillator has been covered often enough in the technical press and in text books, and the basic circuit employed is shown in Fig. 1(a).

From Fig. 1(b) it can be seen that the higher the voltage applied to the series resistor, the lower is the portion of the exponential curve which is used. Unfortunately, if the applied voltage is too high the neon will strike and remain illuminated, with the glow probably appearing at one end of the electrodes and having a purplish tinge instead of the orange tint normally associated with a neon bulb. Some neons are better than others in this respect. The neon used in the prototype was one of the wire-ended indicating type (Home Radio Cat. No. PL32A) and was selected from five bulbs of the same type for best practical results in the circuit.

In the full circuit diagram of Fig. 2 the neon relaxation oscillator circuit is given by RV1, R1, RV2, C1 and V1. Here, RV1 is the linearity control and it functions as a potential divider applying a preset voltage to R1 and RV2. The latter is the horizontal frequency control. RV1 is set so that, at the highest frequency selected by RV2 (where it inserts minimum resistance into circuit) the neon is just below the 'splash' point just mentioned. In the prototype, the slider of RV1 was set nearly at the h.t. positive end of its track.

The timebase signal is taken via the X input jack socket to the X gain control, RV3, and thence to

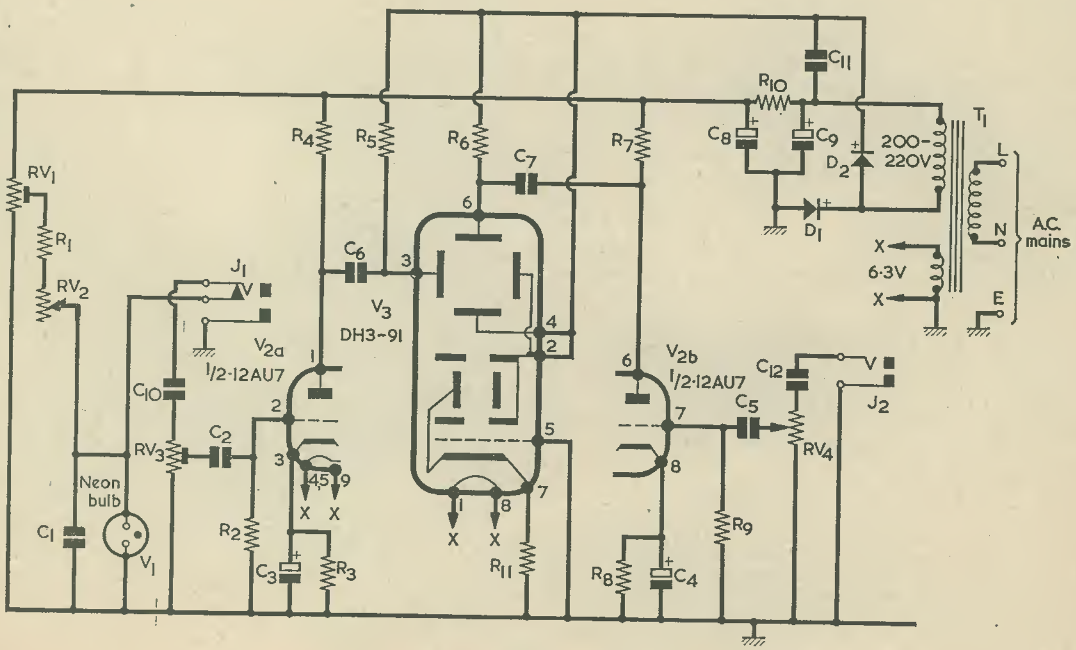

Fig. 2. The circuit of the miniature oscilloscope

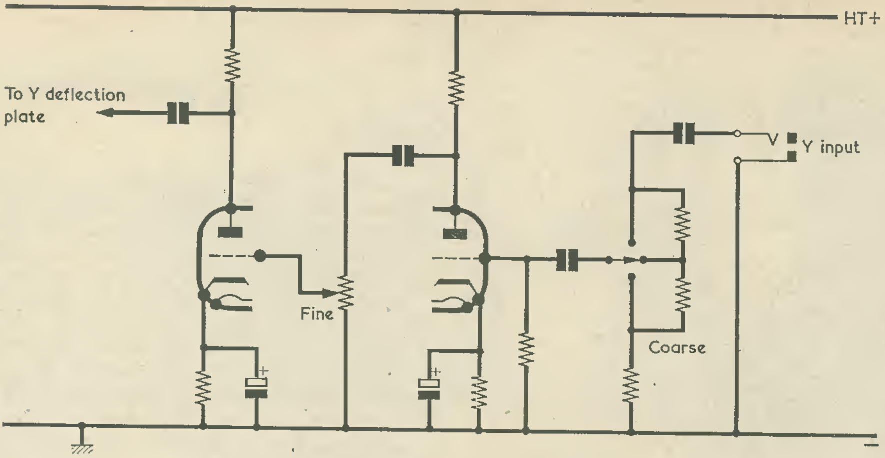

Fig. 3. Basic circuit for an alternative Y amplifier

one half of a double triode, V2(a). This is the X amplifier. Upon inserting a jack plug into the X input socket, J1, the timebase signal is cut off and an external X signal can be injected.

The double triode could have been used as a 2-stage Y amplifier only, as shown in basic form in Fig. 3. This would have increased the Y sensitivity considerably, but would have meant that the neon was driving the tube direct, and as there is only about 30V between striking and extinguishing voltages this is not really sufficient for a full sweep. Nevertheless, the idea is suggested for those who wish to experiment.

By using the double triode for both X and Y amplifiers, relatively low signals can be fed into the X socket. Both amplifiers are identical. To obtain a good low frequency response C6 and C7 should have a high value, as specified.

The valve used is a 12AU7. This is a medium gain valve. The range of double triodes provided by the 12AT7, 12AU7 and 12AX7 is a very useful one and can offer a lot of advantages, particularly as all three valves have the same pin connections, making them interchangeable. With the prototype, the 12AU7 gave highest frequency coverage.[1]

The tube itself, a DH3-91, is ideal for this type of project owing to its small size, being only about 4in. long. Assymetrical deflection was used, and as the brightness was about right for normal viewing and no focusing was necessary (the tube is a self-focusing type) no e.h.t. potential chain was needed. No centralising control is required, the spot being comfortably central provided that C6 and C7 have very low leakage. The pin connections to the tube shown in Fig. 2 cause the usual X and Y plate functions to be transposed. (In normal usage, the X plates are pins 4 and 6, and the Y plates are pins 2 and 3.).[2]

POWER SUPPLY

The mains transformer should have an h.t. secondary offering about 200 to 220V, together with a 6.3V heatetr winding. D1 acts as a half-wave rectifier and supplies h.t. voltage for the two triodes and the neon oscillator. In company with D2 it also appears in a voltage doubling circuit allowing a doubled e.h.t. voltage to be available for the final anode and deflector plates.

Not having access to a mains transformer of suitable size, the writer decided to try hand-winding one. This really isn't as bad as people make out! By taking care he had only one break in the secondary, which used 50 s.w.g. wire.

The core employed was salvaged from a heater transformer in an old radio, and the lamination dimensions are given in Fig. 4. The central core size was ⅜in. by ¾in., and the laminations were interleaved (i.e. the core was made up of alternate E's

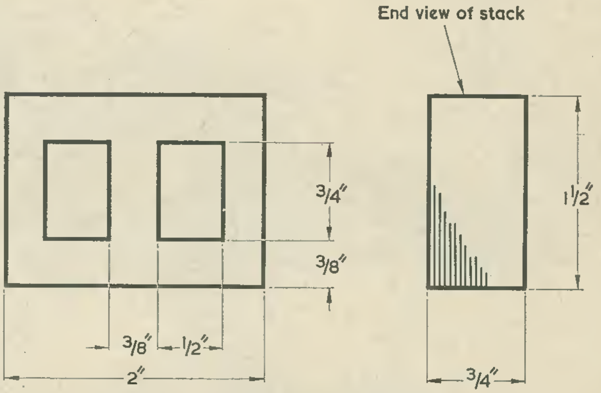

Fig. 4. Dimensions of the laminations used for the home-wound mains transformer. The stack size is ¾in.

---

[1] The rather high value specified for V2(b) cathode bias resistor, R8, is that employed in the prototype and was found to be optimum for gain and linearity. However, it means that the valve runs at a very low anode current and it may be found that R8 may have to be reduced in value by quite a considerable amount with some 12AU7's. R3 may be similarly reduced in value if it is found that an improvement in X gain and linearity results.—Editor.

[2] The true X plates of the DH3-91 are intended for symmetrical deflection and the true Y plates for asymmetrical deflection. Because of this difference, and since the electrode connections employed in Fig. 2 give the required centring in practice, these connections should be employed (although the use of the X and Y plates for their intended function could, of course, be checked out experimentally if desired). The DH3-91 is a current Mullard c.r.t. and may be purchased through radio retailers in the normal manner.—Editor.

and I's). The transformer was wound in the following manner.

Primary: 2,880 turns of 40 s.w.g. enamelled copper wire.

Secondaries: 2,400 turns of 50 s.w.g. enamelled copper wire, and 85 turns of 26 s.w.g. enamelled wire.

These secondaries give an output of 210V a.c. and 6.3V a.c. respectively.

For those who do not wish to wind the transformer some very small ready-made components are suitable, although they may not be quite as small as that made up by the writer.[3] The power required by the oscilloscope circuits is very low. Heater current is O.6A and h.t. current is only of the order of a milliamp.

If the constructor plans to wind the transformer himself it is a good idea to use a winder of some type. This can be anything from a hand drill held in a vice to a professional motor driven winder. It is fairly easy to make an adequate winder from bits of scrap wood, etc., and Fig. 5 shows a typical example. The writer's winder was fitted with a G.P.O. electromagnetic counter driven by a switch on the handle. A handy source of interleaving paper can be found in non-metallised paper capacitors.

CONSTRUCTION

The dimensions of the case in which the complete oscilloscope is housed depend to some extent upon the size of the mains transformer. The prototype, using the author's home-wound transformer, was housed in an Imhof 'Minibox' measuring 3in. by 4in. by 5in.[4] Suitable alternative cases may be made up following normal metal-working techniques.

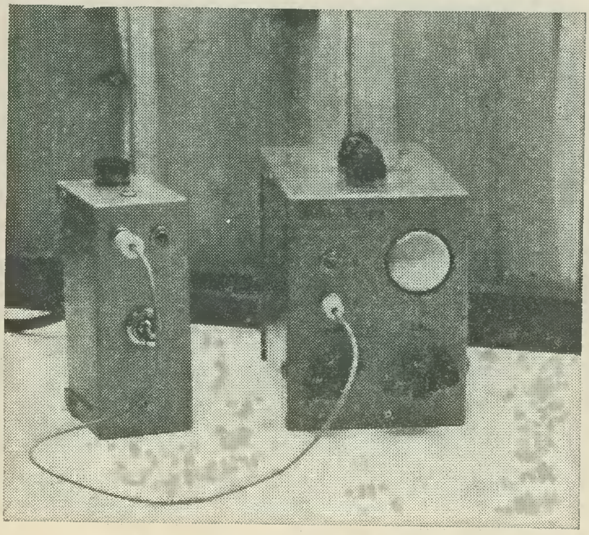

The oscilloscope coupled to a home-built a.f. oscillator

COMPONENTS

Resistors

(All fixed values $\frac{1}{4}$ watt 10%)

R1	470kΩ
R2	1MΩ
R3	33kΩ (see text)
R4	270kΩ
R5	1MΩ
R6	1MΩ
R7	270kΩ
R8	33kΩ (see text)
R9	1MΩ
R10	20kΩ
R11	560kΩ
RV1	1MΩ pot., linear, preset (see text)
RV2	1MΩ pot., linear
RV3	1MΩ pot., linear, preset (see text)
RV4	1MΩ pot., linear

Capacitors

C1	0.1μF paper, 250V wkg.
C2	0.1μF paper, 250V wkg.
C3	10μF electrolytic, 30V wkg.
C4	10μF electrolytic, 30V wkg.
C5	0.1μF paper, 250V wkg.
C6	0.1μF paper, 500V wkg.
C7	0.1μF paper, 500V wkg.
C8	4μF electrolytic, 350V wkg.
C9	4μF electrolytic, 350V wkg.
C10	0.1μF paper, 500V wkg.
C11	0.2μF paper, 350V wkg.
C12	0.1μF paper, 500V wkg.

Transformer

T1	Mains transformer, secondaries: 200 to 220V and 6.3V (see text)

Valves, C.R.T.

V1	Neon bulb, Home Radio Cat. No. PL32A (see text)
V2	12AU7
V3	DH3-91 (Mullard)

Rectifiers

D1	BY100
D2	BY100

Sockets

J1	3.5mm jack socket with open-circuit leaf (see Fig. 2)
J2	3.5mm jack socket
	Jack plug (for input test lead)

Miscellaneous

B9A valveholder
B8G valveholder (for c.r.t.)
2 pointer knobs
Metal case (see text)
Material for valveholder bracket
Wire, 3-core mains lead, etc.

---

[3] A particularly suitable transformer here would be the Osmabet component available from Home Radio under Cat. No. TM26. This has secondaries of 200V at 25mA and 6.3V at 1A, and its dimensions are $1\frac{7}{8}$in. by $2\frac{1}{8}$in. by 2in., with $2\frac{1}{2}$in. fixing centres.—Editor.

[4] The 'Minibox' referred to is type M3030 and is available by mail order from Alfred Imhof Limited, Ashley Works, Cowley Mill Road, Uxbridge, Middlesex. It should be mentioned that orders for 'Miniboxes' and other Imhof instrument cases and housings under £5 are subject to 25% surcharge, and carriage and packing is extra.—Editor.

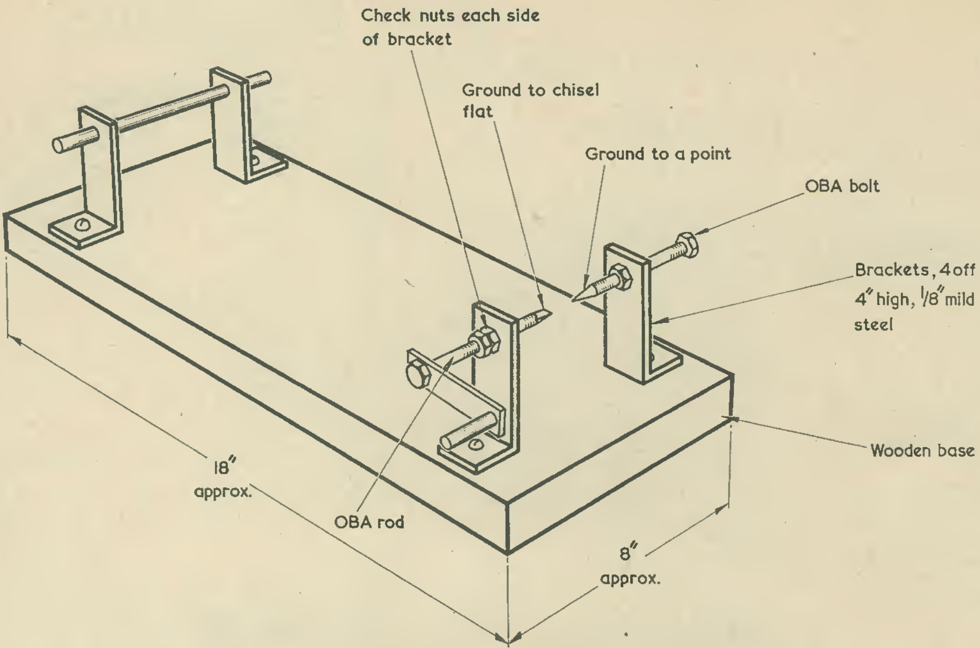

Fig. 5. A simple hand winder for winding coils and transformers

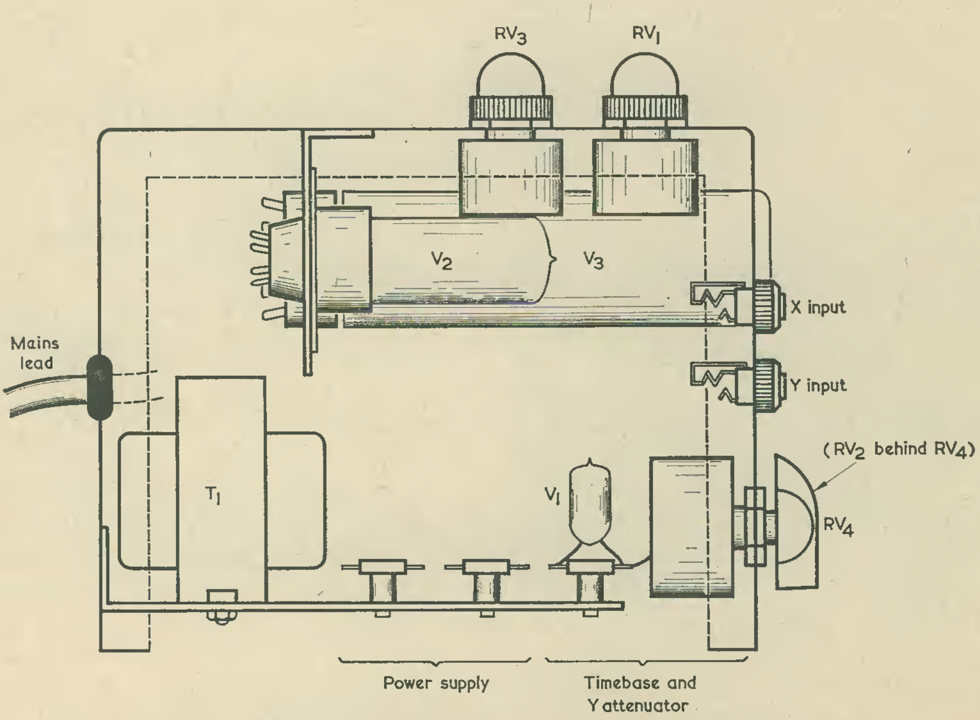

Fig. 6. The layout of the principal components inside the case

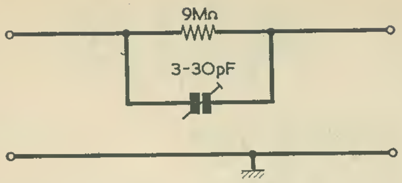

Fig. 7. A simple 'divide by 10' probe, which can be used externally

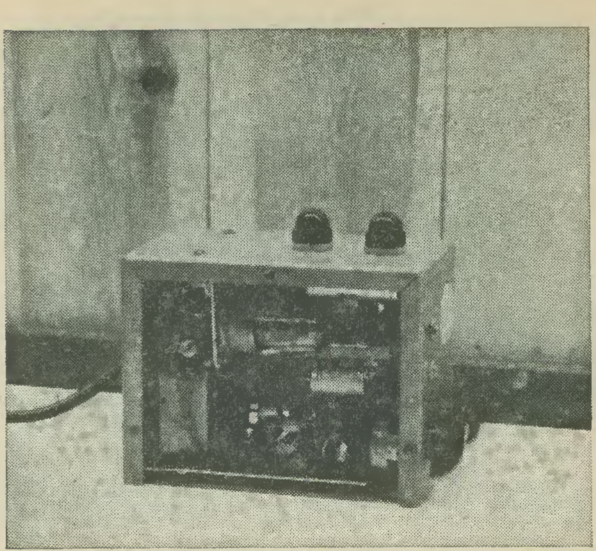

Side view, showing the internal components of the oscilloscope

As can be seen from Fig. 6, V2 and V3 are mounted on a small bracket and hang from the top of the box. Most of the components associated with the valve and the c.r.t. are mounted directly on to the valve and c.r.t. bases.

The ideal position for the mains transformer would have been with the laminations in line with the tube; however, in the position shown there is very little magnetic hum pick-up, and this can be cured by screening the transformer with small pieces of mu-metal. A word of warning is required here. Don't bend mu-metal more than can be avoided or it loses its marvellous screening properties.[5]

The lower part of the case is used for the power supply and timebase circuits. Several small tagstrips are adequate for mounting the components concerned.

In the side view of Fig. 6, RV4 is mounted on the front panel, with RV2 behind. RV1 and RV3 are panel-mounting preset potentiometers with plastic covers fitted over their spindles. (These covers were non-standard items found in the writer's spares box and are not, of course, essential.) A saving in space could be given if miniature skeleton preset potentiometers were employed instead, these being positioned inside the case with access when the case side is removed.

A 3-core mains lead passes through a grommet at the rear of the case and allows for connection to the mains via a 3-way plug. The mains lead ensures also that the metal case of the oscilloscope, which is common to the chassis line in Fig. 2, connects reliably to the mains earth. There is no on-off switch in the oscilloscope itself, this function being carried out by the switch at the mains socket to which it is connected.

ATTENUATOR PROBE

A 'divide by 10' attenuator probe can be very useful in some instances and it consists of a 9MΩ resistor bypassed by a 3-30pF trimmer, as shown in Fig. 7. The trimmer is set so that, when a square wave is fed in, there is no overshoot on the leading edges (i.e. there is a flat frequency response).

CONCLUSION

In conclusion, the writer would like to state that the prototype has given no trouble and, at the time of writing, has had about 200 hours running as a monitor coupled to a stereo amplifier in addition to a demonstration at the Shefford Radio Club and other usage. Also, despite the small size of the mains transformer and the winding details (2,500A per sq. in.), the unit runs very cool.

■

---

[5] Mu-metal has been available in the form of govt. surplus c.r.t. shields and the like, but it may be a little difficult to obtain these days by readers who rely on general mail-order suppliers for components. If no mu-metal can be obtained it would be better to design the case so that the mains transformer can be mounted with its laminations in line with the c.r.t.—Editor.

CAN ANYONE HELP?

Requests for information are inserted in this feature free of charge, subject to space being available. Users of this service undertake to acknowledge all letters, etc., received and to reimburse all reasonable expenses incurred by correspondents. Circuits, manuals, service sheets, etc., lent by readers must be returned in good condition within a reasonable period of time.

Eddystone 990R Receiver.—D. R. Coppen, 45 Vine Street, Romford, Essex — purchase of handbook.

Impedance Bridge.—G. M. Watson, 2 Winn Court, Southampton SO2 1UZ—operating instructions required, loan or purchase, for Marconi Universal Impedance Bridge Type TF373C.

R209 Receiver.—T. R. Smith, 50b Aldershot Road, Guildford, Surrey—handbook, circuit or any other information.

MOBILING AND MOBILEERS

by

A. S. CARPENTER, G3TYJ

In his earlier article, "Amateur Radio and Radio Amateurs" (published in our April 1969 issue), A. S. Carpenter gave a fascinating insight into amateur transmission and reception. Here he takes the story a stage further by giving an outline on station operation from a vehicle

IN THE EARLIER ARTICLE, "AMATEUR RADIO AND Radio Amateurs", some aspects of SWL'ing (short wave listening) and operating a transmitter from a fixed location were considered. There are, however, alternative modes of working and /P (Portable) operating can also prove very rewarding. One of the more popular operating modes is (/M Mobile) and year by year the number of Mobile licences issued by the G.P.O. increases proportionately with the traffic QRM!

"On the move" /M operating is obviously hazardous compared to working from a stationary vehicle but both types are indulged in during the so-called summer months.[1]

Although operators wishing to transmit from a vehicle are required to be G.P.O.-licensed radio Amateurs—the Mobile licence is merely an extension of the existing Amateur (Sound) licence but requiring an additional fee of 30s.—SWL's require no licence and are not called upon to pay a fee additional to the normal broadcast licence fee necessary for a fixed car radio installation.

AMATEUR BANDS USED FOR /M WORKING

Although practically any of the Amateur bands could be used for Mobile working, 2 metres and "Top Band" (160 metres) are the most popular, and at the various Amateur Motor Rallies held up and down the country during summer months "Talk-in" stations are always active on these two bands to help guide in intending visitors.

Type A3 emission (a.m. double sideband phone) is normally used because of its simplicity, and a little thought soon reveals that s.s.b. (single sideband) is unacceptable due to the difficulty of resolving s.s.b. signals clearly in a moving vehicle. Satisfactory reception of s.s..b. entails the use of a b.f.o. and/or product detector and many mobile rigs are without either; in any case the precise b.f.o. control setting necessary to make s.s.b. readable is not easily achieved whilst driving—or from the passenger seat!

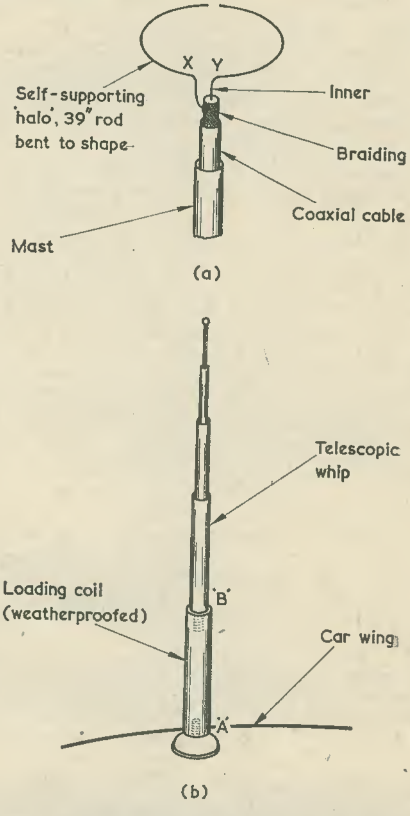

Fig. 1(a). A simple aerial such as this may be employed for 2 metre mobile operation (b). A whip aerial, with loading coil, for work on Top Band

---

[1] As is pointed out by the R.S.G.B., mobile equipment and operation must not distract the driver's attention from the all-important task of controlling his vehicle. There could be no valid defence if it were proved that an accident was due to the operation of Amateur Radio equipment by the driver of a vehicle.—Editor.

It is probably true to say that the majority of Amateur Mobile activity takes place on Top Band since the equipment needed is both simple and comparatively inexpensive.

THE AERIAL

An aerial of suitable type is necessary, and for simple listening need, perhaps, be nothing more than a conventional car aerial of suitable length. An aerial properly designed for the band required is nevertheless a distinct advantage, even for listening, and it is essential for transmitting. For 2 metre Mobile work the aerial is but a small problem and a resonant "halo" type as shown in Fig. 1(a) is adequate. This consists of a half-wave dipole 39in. long bent to form an incomplete circle. An insulated mounting is required at points X and Y in the diagram, and the coaxial cable is pulled down into the mast.

For Top Band the problem is rather more tricky, for even a quarter-wave aerial to resonate around the mid-band frequency of 1,900kHz would need to be about 123ft. long! It is necessary to effectively compress the aerial into a more convenient length of 12ft. or less, and for this purpose a "loading coil" is used. This makes the overall system resonant at the desired frequency. The loading coil may be positioned at the base, centre or top of the whip, the design and number of turns the coil requires being governed largely by the position it is to occupy. Visit an Amateur Radio Mobile Rally and you will see a wide variety of Top Band whip aerials with coils of various shapes and sizes, for the really keen types spend many hours patiently trying to make the perfect mobile aerial. Whilst some of the aerials seen will not be overpleasing to the eye others again will be unobtrusive. Commercially made Mobile aerials will also be seen and one maker marketing a base-loaded whip makes provision for it to be unscrewed from the car wing—see Fig. 1(b)—at point A, whilst the whip section can also be unscrewed at point B. The assembled aerial is quickly resonated by adjusting the telescopic section and the whole aerial can be rapidly removed and stowed in the car for safety when leaving it.[2] Unfortunately this does not guard the car itself against theft!

RECEIVING EQUIPMENT

The receiving equipment can either be built specially for the band required or alternatively an existing car radio receiver may be employed by adding a converter as an outboard item. Most Top Band mobile QSO's take place between 1,870 and 1,930kHz. Consider a transmission appearing at around 1,920kHz. If a converter were built to change this signal to a new frequency of say 1,600kHz or so, this could be fed to the aerial socket of a broadcast band receiver tuned to the high frequency end of its medium waveband scale and resolved easily. Such a converter may be either valved or transistorised, and could be quite small in physical size. The scheme outlined in Fig. 2 shows a convenient set-up, the ganged switches S1(a) and S1(b) enabling either converter or receiver to be used at will.

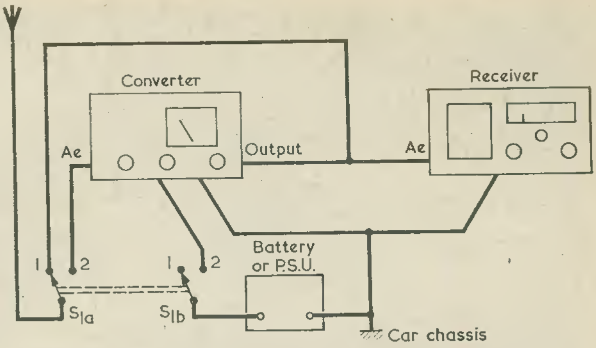

Fig. 2. A converter makes it possible to use the existing car radio for Top Band reception

TRANSMITTER

A simple Top Band transmitter capable of working at the maximum permissible d.c. input of 10 watts can be put together fairly easily, and many suitable designs have appeared in this and other similar publications from which to choose. Physical size is usually of considerable importance but when modern miniature valves are utilised the whole transmitter need be no larger than about 8in x 4in. x 4in. Valves type 6BW6 are excellent for p.a. and modulator output, and smaller valves, such as the familiar ECC81 and ECC83 for example, may be used for v.f.o./doubler and speech amplifier stages. Miniature transistorised transmitters are also on the increase and are available commercially for Top Band.[3]

ARRANGING A MOBILE INSTALLATION

It will be appreciated that there are several units in a complete mobile installation and that it pays to give considerable thought to the matter of arranging them in a vehicle. It is easy to become over-enthusiastic and push in items anywhere they will fit; the result of this is a bird's nest of twisted cables, causing badly strained nerves when something goes wrong! Function switching requires careful consideration, and ease of operation should always be sought. Design the rig to the vehicle and spend a lot of time beforehand taking measurements; this time will not be wasted.

In some cases it may be possible to assemble all units neatly together as a single item which can be slid in and out of the vehicle at will. The writer did just this on one occasion in connection with a Morris Traveller by utilising the passenger side shelf compartment. Such an assembly is easily conveyed from car to shack and vice versa; it can also be tested and operated from the shack when required.

CONCLUSION

Doubtless a great deal of time is spent and much pleasure derived by the radio amateur fraternity

---

[2] This particular aerial assembly is available from Halson Radio, 2 Sefton Street, Blackpool.

[3] A. S. Carpenter has already described a suitable mobile Top Band transmitter, constructional details being given in "A Top Band Solid State Transmitter" published in the June, 1969, issue A matching receiver "Top Band Transistor Superhet" was described in the July, 1969, issue.—Editor.

playing around with mobile equipment. Taking the car to a high point, either when on holiday or during free time, and enjoying QSO's with others similarly interested—or even just listening in to QSO's—can be a pleasurable and relaxing pastime. TVI is absent too! Many mobileers also enjoy a friendly natter on their way to and from work or contacting fixed stations *en route* for other parts. The ultimate enjoyment is normally a visit to a Mobile Rally and some keen types motor hundreds of miles to make an appearance and contact.

Mobile to mobile ranges depend on operating locations and, because of this, tend to vary considerably. Distances are greater with mobile to fixed-station operatings. 20 to 30 miles is not unreasonable across good country.

Yes, mobiling is a good way of life (almost on a par with fixed station c.w.!) and if by now you are feeling the bug biting—well, you will find plenty of interesting information to help you if you look around. 73! ■

The "Kaknas Tornet"

by

MAURICE WALTERS

Our contributor gives facts and figures on the Stockholm Telecommunications Tower, which may be looked upon as the Swedish counterpart of our own Post Office Tower

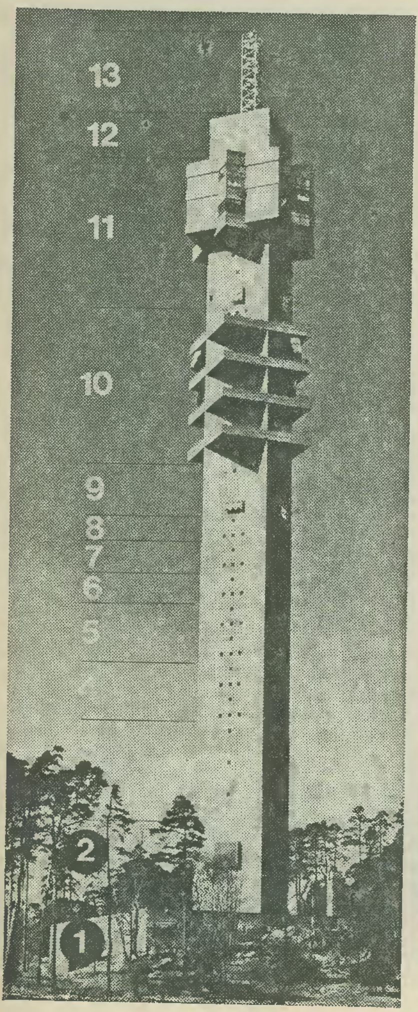

View of the complete Telecommunications Tower, with all the sections numbered

THE WORDS "KAKNAS TORNET" are Swedish and they mean the Tower of Kaknas (which is a suburb of Stockholm, the Capital of Sweden).

This telecommunications tower was planned and designed by the early sixties and construction started in the autumn of 1963. The official opening ceremony was held in 1967 on May 12th.

As can be seen from the photograph, there are certain similarities between the Swedish tower and our own Post Office Tower in London. Perhaps to some the Swedish counterpart may be less elegant than the G.P.O. Tower but it certainly embodies all the latest design techniques. The London Tower is 580ft. high and the Swedish one 455ft.—these figures being for the main structures. Both towers have trellis masts, the G.P.O. one being 40ft. and the Swedish one being 52.5ft. Therefore, with a quick bit of maths it can be seen that, in total, the Swedish tower is 507.5 against the G.P.O. version of 620ft.

The Swedish tower consists of a square-shaped radio-relay tower and a surrounding three-level ground structure which also takes the form of a square. The sides of the tower measure 10 metres.

At a height of 80 to 100 metres are situated four balconies, placed diagonally, where radio-relay aerials are located, while at 120-130 metres above the ground there are four levels shaped as an eight-pointed star and intended for the general public.

There are two high-speed lifts which move at a rate of five metres

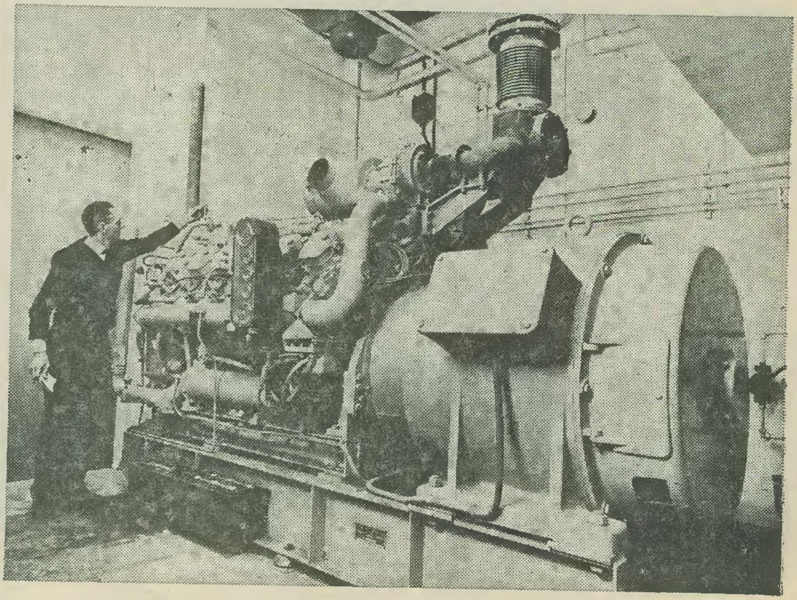

The 500kW emergency power unit which ensures reliable operation. Should the mains supply fail the diesel unit starts automatically and, after some 20 seconds, is ready to supply the plant with power. In the meantime the power supply is maintained by batteries a second, so before you have had time to catch up your stomach you are on the top floor! Each of these lifts can take 13 persons at a time, and are said to be the fastest in Europe!

THE ENTRANCE LOBBY

In the entrance lobby of the ground structure (No. 1 on the photograph) which visitors have to pass on their way to the lifts, two walls are covered by a work of art called "Playroom Futurum" produced by Walter Bengtsson, a renowned Swedish sculptor. The material he used is nickel-plated and partially enamelled copper; the subject of the artistry alluding to human communications. The concrete exterior of the tower is also adorned with relief designs which refer to television techniques.

PURPOSE OF THE TOWER

The telecommunication tower is designed to serve as a switching centre for the Swedish Telecommunications Administration's country-wide network for the distribution of sound broadcasting and television programmes. The tower contains radio-relay equipment for television, sound broadcasting and multi-channel telephony, as well as power supply and ventilation equipment, etc.

The Stockholm broadcast control centre is installed in the ground structure and this acts as the central operational point of contact between the Telecommunications Administration and the Swedish Broadcasting Corporation. Here are performed switching and supervision of programme circuits covering the whole of Sweden. In addition this ground structure houses a remote control centre for the technical operation and control of communication circuits and transmitter stations in a large part of eastern Sweden.

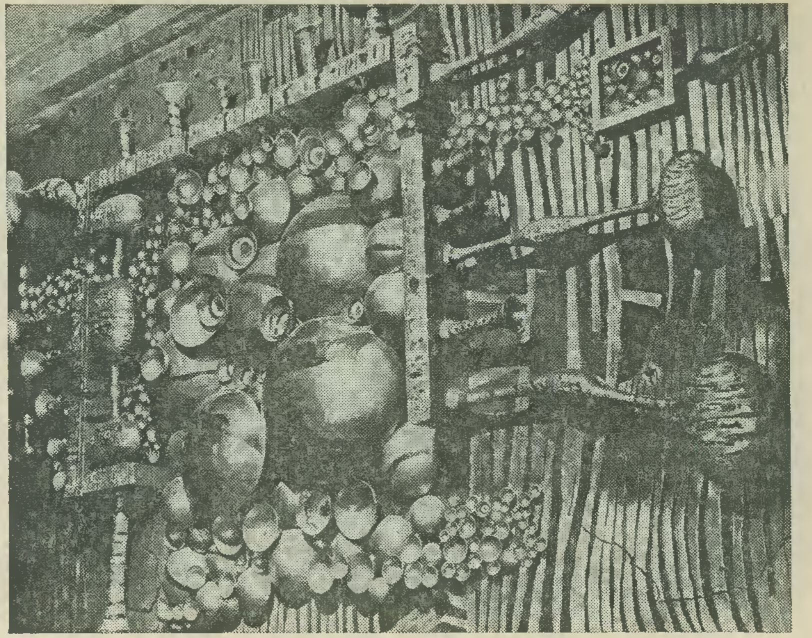

The Swedish sculptor, Walter Bengtsson, produced this work of art, called "Playroom Futurum", which is situated in the entrance lobby of the Tower. It is made of nickel-plated and partially enamelled copper, and the motif is human communication. This picture shows a section of the big sculpture which covers two walls

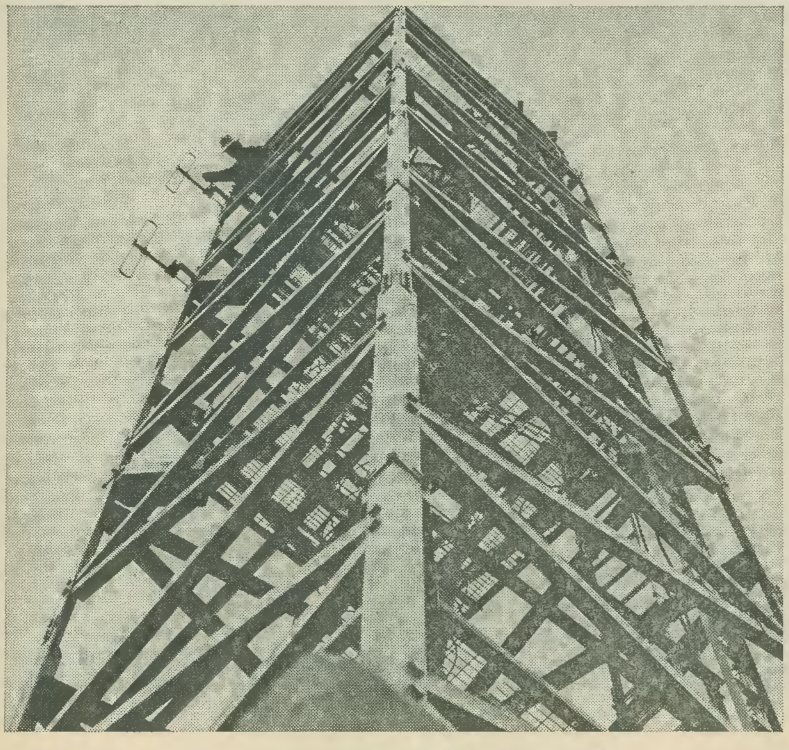

A close-up view of the top mast on the tower

COLOUR TV AND STEREO

The tower has, from the outset, been provided with equipment for the future distribution of colour television and stereophonic sound radio. There are some 80 people stationed in the Telecommunications Administration's section of the tower building. They work in shifts because 24-hour supervision is essential at the control desks.

THE COST OF IT ALL

The cost of the whole tower — including the technical equipment— has been estimated at about 30 million Swedish Krona (and 1 Krona is worth 1s. 11d. now), and the city of Stockholm has contributed towards the costs and is also in charge of the restaurant and belvedere galleries. It is also estimated that over 200,000 persons visited the tower in the first two months after it had been built.

Two young ladies on the open viewing balcony of the Tower. In the background can be seen the seaway that leads out into the Gulf of Bothnia

WHAT EVERYTHING IS

There are 13 sections of the Stockholm Tower and these are indicated by the numbers on the photograph.

1. The ground structure of the Kaknas Tornet houses the offices and operational premises of the Swedish Telecommunications Administration's Broadcast Control for the Stockholm region. Here are performed the selection, switching and supervision of sound broadcasting and television circuits between the studios of the Swedish Broadcasting Corporation and transmitter stations located in various parts of the country. Also controlled are circuits used by the Corporation for the gathering and recording of programme components, together with circuits used in the International exchange of broadcast transmissions. The ground structure also contains remote control equipment for the technical operation of a large number of transmitter and radio-relay stations in Sweden. The emergency power plant, a diesel unit starting automatically about 20 seconds after a mains failure, is located in the basement, as also is the entrance to the lifts.

2. On this level are located the installations for air-conditioning.

3. This level houses power supply control plant, including voltage stabilisers. In case of mains failure the batteries of this plant supply power until the emergency generator takes over. Also at this level is power supply apparatus for the battery-fed telecommunications equipment.

4 Storage rooms for technical equipment.

5. Offices and archives.

6. Storage rooms.

7. Premises for test and repair of radio-relay equipment.

8. Sundry radio equipment.

9. Ventilation equipment for the radio-relay rooms.

10. This number identifies five levels housing radio-relay equipment for sound broadcasting and television, as well as for multichannel telephony. Four levels are provided with balconies where large parabolic aerials for radio-relay links are positioned.

11. This section includes one glass-enclosed and one open-air belvedere gallery, as well as the restaurant and its appurtenant premises (eight levels).

12. Ventilating plant, lift engines and base of top tower.

13. This is a 52.5ft. lattice tower whose apex is 507.5ft. above the ground. It is intended for aerials which have to be placed higher than balcony levels (No. 10). It is provided with fixed rotating lights to warn aircraft.

If any readers of *The Radio Constructor* are contemplating a trip to Scandinavia for their holidays, a visit to the Stockholm Telecommunications Tower is a MUST! ■

NEW EMI COLOUR TELECINE

EMI Television have introduced a new item of equipment, EMI Colour Telecine type 414, to produce high-quality colour television signals from film suitable for NTSC, PAL or SECAM systems. Either simplex or multiplex arrangements can be supplied; the latter comprise a combination of three film or slide projectors. The film projectors can be either 16mm or 25mm types, or a mixture of both.

The EMI Colour Telecine type 414 employs the new Colour Camera type 2002, a modified version of the world famous type 2001, and has many outstanding features. These include a special fast-acting multiplexer, automatic light control, forward and reverse run film projectors, fully random access slide projector, interlock for unmarried sound and a film loop facility. The projectors are started and stopped automatically by means of a preset cue system, and both film contrast characteristic correction and aperture correction are adjustable. The equipment, which can be remotely controlled from a telecine control console and the production control room, handles colour positive film, black and white positive film, and black and white negative film.

UNDERSTANDING RADIO

$f=\frac{1}{2\pi\sqrt{LC}}$

CRYSTAL FILTERS

by W. G. Morley

In last month's article in this series we introduced the quartz crystal as used for frequency control of r.f. oscillators or, as we shall see this month, for filters intended to improve the selectivity of superhet i.f. amplifiers. We noted that the quartz crystal can be represented as an inductance, a capacitance and a resistance in series, with the capacitance of the crystal holder connected across these three. The crystal has two resonant frequencies. These are the series resonant frequency, given by the inductance and capacitance in series, and the parallel resonant frequency, given by the combination of series inductance, capacitance and resistance shunted by the capacitance of the holder. The series resonant frequency is lower than the parallel resonant frequency.

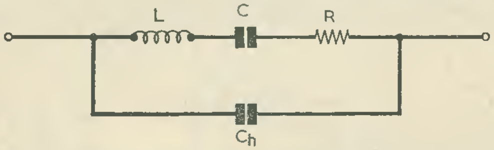

Fig. 1. The equivalent circuit for a quartz crystal

We concluded by examining typical crystal controlled oscillators. These operate at -the parallel resonant frequency of the crystal, which may then be looked upon as being a parallel tuned circuit having an extremely high value of Q.

We turn now to the manner in which a quartz crystal is employed for enhancing the selectivity of the i.f. stages of a superhet receiver.

CRYSTAL I.F. FILTERS

For convenience, we shall reproduce the equivalent circuit for a crystal which was shown last month, this appearing in Fig. 1. In this diagram, Ch is the capacitance of the crystal holder. When the crystal is resonant at its series resonant frequency the inductance and capacitance exhibit zero impedance, whereupon the only impedance offered by the crystal is the resistance. The latter may, typically, be of the order of 1kΩ to 2kΩ.

If we wished to employ the crystal to select a small band out of a wide range of signal frequencies, what might appear to be a useful starting point, working from first principles, could consist of employing a circuit similar to that shown in Fig. 2. Here, the crystal appears between the anode of one amplifying valve and the signal grid of a succeeding valve. The blocking capacitor is included merely to provide d.c. isolation, and has negligible reactance at the signal frequencies appearing in the circuit.

It is evident that the crystal will offer minimum impedance at its series resonant frequency, whereupon signals at or very close to that frequency will suffer less attenuation in their passage from the anode to the following grid than signals whose frequencies are spaced well away. Unfortunately, the crystal does not exhibit a very high impedance at frequencies well removed from its series resonant frequency, and signals at such frequencies may still pass through the crystal to the succeeding grid, albeit at reduced amplitude.

It is interesting to note that the performance of the circuit of Fig. 2 can be varied by changing the value of the grid resistor following the crystal. To take an example, let us assume that the crystal in the circuit offers an impedance at series resonance of 2kΩ and an impedance at frequencies well removed from series resonance of about 100kΩ. If, under these circumstances, the grid resistor in Fig. 2 has a value of say 100kΩ, signals far removed from the series resonant frequency of the crystal will, in effect, be applied to a

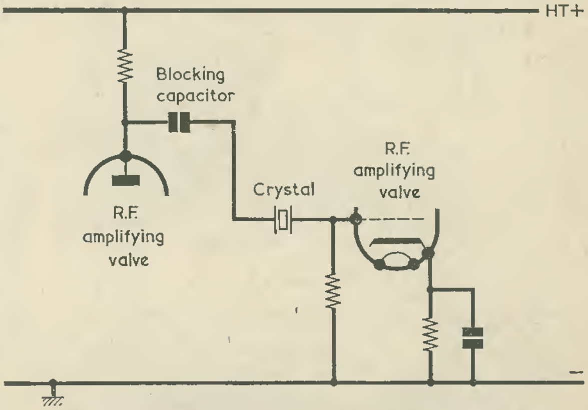

Fig. 2. The performance of a crystal connected in this circuit is discussed in the text

potentiometer consisting of 100kΩ, given by the crystal, and a second 100kΩ, given by the grid resistor. This situation is shown in Fig. 3(a), where it may be seen that (ignoring the effect of circuit capacitances such as the grid-cathode capacitance of the following valve) the signal amplitude at the grid is one-half that at the preceding anode. Fig. 3(b) shows the situation at series resonance, where the crystal offers an impedance of 2kΩ. The signal amplitude at the grid is now 100/102 times that at the previous anode. The circuit conditions in Figs. 3(a) and (b) illustrate that signals at the series resonant frequency suffer negligible attenuation, whilst signals far removed from the series resonant frequency suffer 50% attenuation only. The difference in attenuation between the two classes of signal frequencies is very small, and is certainly far too low for the crystal circuit, as represented to be of any practical use.

Performance is improved in Figs. 3(c) and (d), in which diagrams the value of the grid resistor has been arbitrarily reduced to 2kΩ. Fig. 3(c) shows the circuit condition for frequencies well removed from the series resonant frequency, and demonstrates that, in this case, 2/102 of the anode signal appears at the succeeding grid. At the same time, as is illustrated by Fig. 3(d), one-half of the signal at the series resonant frequency of the crystal is fed to the succeeding grid. In this case the signals at frequencies removed from the series resonant frequency suffer about 25 times more attenuation than do those at the resonant frequency. Although by no means perfect, this performance is considerably better than that exemplified by Figs. 3(a) and (b); and it follows that the performance of a crystal filter improves when the value of the impedance which follows the crystal is reduced.

We have not so far mentioned the value required in the anode load of the preceding valve nor the r_a presented by that valve. Without complicating the discussion to too great an extent it can be seen that, if the improved performance given in Figs. 3(c) and (d) is to be realised, the series impedance at the anode should be relatively low in order that anode signal voltages do not fall excessively when changing from the set of circumstances in Fig. 3(c) to those in Fig. 3(d). We previously assumed constant signal amplitude at the anode for both Fig. 3(c) and (d). Actually, the anode signal voltage will fall when changing from Fig. 3(c) to Fig. 3(d), and this will reduce the effective selectivity given by the crystal. Thus, the selectivity offered by the crystal improves as the series impedance at the anode decreases.

Figs. 3(a) to (d) have demonstrated an important basic feature concerning the crystal when it is used

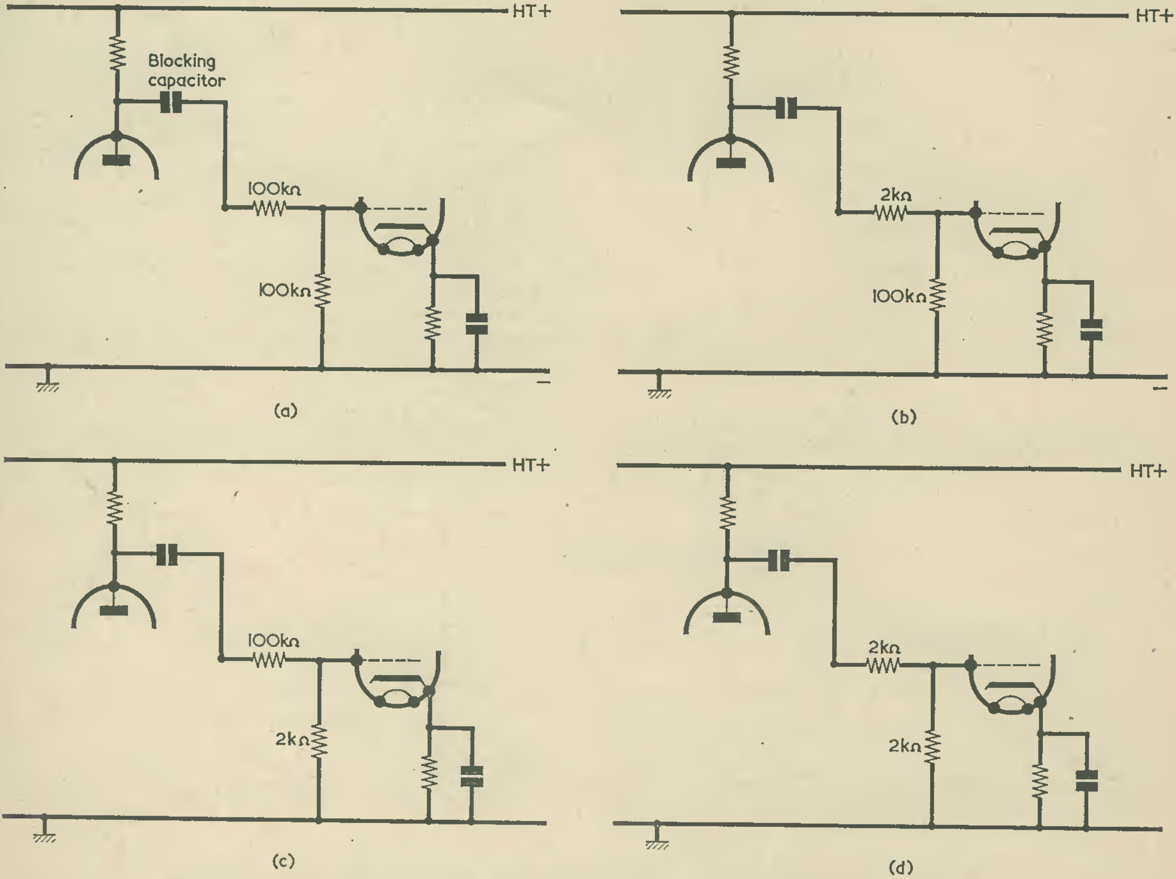

Fig. 3. Analysing the performance of the circuit of Fig. 2 with assumed values of crystal impedance at frequencies well spaced from series resonance ((a) and (c)) and at the series frequency ((b) and (d)

in its series resonant mode as a selective filter. This feature is that the crystal causes a decrease in signal amplitude from the preceding anode to the subsequent grid at *all* frequencies, and it exhibits its selective qualities by reason of the fact that this decrease is less at the series resonant frequency than at the other frequencies. Before proceeding further it must be emphasised that the numerical impedance values we chose for our examples are intended only for purposes of illustration and that they by no means represent accurately the actual impedances which will be encountered in practical crystal filter circuits. Nevertheless, they do demonstrate the importance of the impedance values on either side of the crystal and the fact that selectivity improves as these impedances reduce.

We have also assumed that the crystal offers a constant high impedance at frequencies well removed from the series resonant frequency. In practice, this impedance will vary at different frequencies, although it will always be much higher than the impedance at series resonant frequency.[1]

As is to be expected from what we have seen, the crystal filter can offer a dramatic increase in sensitivity over a range of signal frequencies close to series resonance. The increase in selectivity for frequencies well spaced from series resonant frequency is not so marked. In a practical i.f. amplifier, the selectivity required for attenuation of the well spaced signal frequencies is mainly provided by normal i.f. tuned circuits and transformers.

When discussing the circuits of Figs. 3(a) to (d) we did not mention the parallel resonant frequency of the crystal. At the parallel resonant frequency the crystal behaves in the same manner as a parallel tuned circuit having an extremely high Q, whereupon the crystal offers a very high impedance. A consequential effect is that the crystal will offer very high attenuation to signal frequencies close to, or at, the parallel resonant frequency.

PRACTICAL FILTER CIRCUIT

A practical crystal filter circuit is illustrated in Fig. 4. Here, the anode of the first valve couples into an i.f. transformer whose secondary winding is tuned by two equal-value capacitors in series. A chassis connection is made to the centre junction of these two capacitors, with the result that the signal voltage with respect to chassis at the lower end of the secondary winding is exactly out of phase with the signal voltage at the upper end. Both the primary and the secondary are tuned to the series resonant frequency of the crystal. The upper end of the secondary connects to the crystal and thence to a further tuned circuit, also tuned to the series resonant frequency of the crystal, and to the grid of the succeeding valve. The last tuned circuit has a variable resistor in series with the coil and this component offers a control of the selectivity offered by the crystal. When the variable resistor inserts minimum resistance the tuned circuit presents a high impedance and the selectivity offered by the crystal is at minimum. When the variable resistor inserts maximum resistance the tuned circuit presents a low impedance and the crystal offers maximum selectivity. This is the effect which was illustrated in simplified form in Figs. 3(a) to (d). There is no impedance-varying control in the input circuit feeding the crystal, although detuning of the i.f. transformer secondary will lower the impedance it offers and further increase crystal selectivity. Normally, sufficient control of selectivity is achieved with the aid of the variable resistor only.

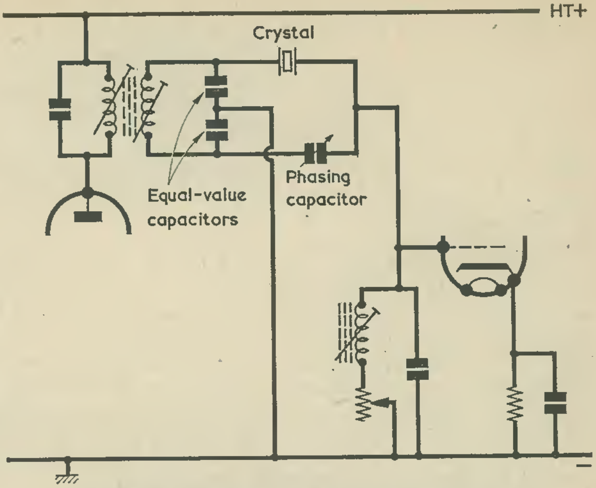

Fig. 4. A practical crystal filter circuit incorporating both phasing and selectivity controls. The selectivity control is given by the variable resistor in the grid tuned circuit

In the equivalent circuit for the crystal shown in Fig. 1 we have the capacitance due to the crystal holder, which is identified as Ch. It is the existence of

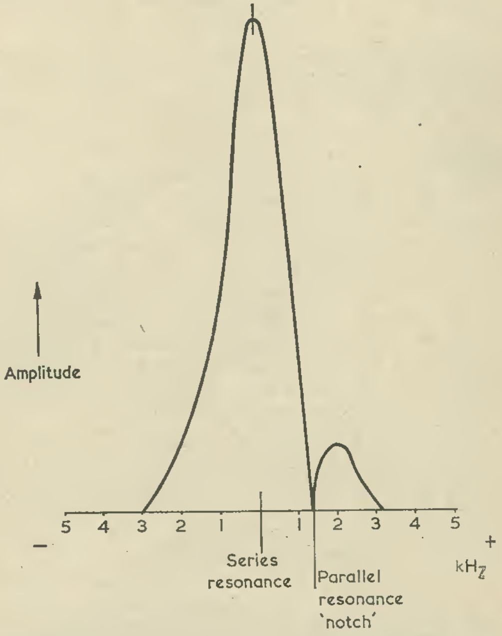

Fig. 5. Response curve for a crystal filter of the type shown in Fig. 4. The parallel resonance "notch" may be shifted either side of the series resonant frequency by means of the phasing capacitor

---

[1] This statement should be qualified by mentioning that a crystal may have subsidiary resonances at frequencies other than its nominal frequency. When the crystal is used in a filter circuit, such subsidiary resonances will, however, be well outside the band of frequencies passed by the i.f. transformers in the i.f. amplifier.

this capacitance which enables the crystal to offer a parallel resonant frequency. If we could add what would effectively be a "negative capacitance" to Ch it would be possible to cancel out its effect completely, whereupon the crystal would function as a series tuned circuit only. This "negative capacitance" is applied in Fig. 4 by way of the *phasing capacitor* between the lower end of the i.f. transformer secondary winding and the right-hand terminal of the crystal. The "negative capacitance" concept is acceptable here because the signal voltage applied to the phasing capacitor is exactly out of phase with that applied to the crystal. As, starting from minimum, the capacitance of the phasing capacitor is increased, more and more "negative capacitance" is applied across Ch until it is eventually neutralised and the crystal behaves purely as a series resonant circuit. This will occur, in a truly symmetrical circuit, when the capacitance of the phasing capacitor is equal to Ch.

Let us next examine more closely the result of adjusting the phasing capacitor.

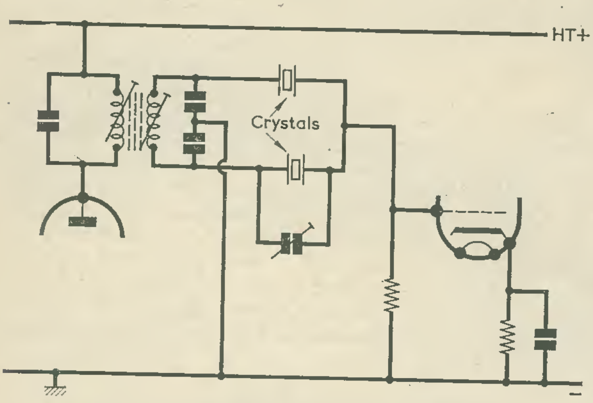

Fig. 6. A band-pass crystal filter. The grid resistor has a value which enables the desired response curve to be obtained

When, starting from minimum, the value of this capacitor is increased, the first effect is that the parallel resonant frequency offered by the crystal decreases until it closely approaches the series resonant frequency. The parallel resonant effect then disappears, and a very slight further increase in phasing capacitance causes Ch to be completely neutralised. If, however, we continue to increase the phasing capacitance, the parallel resonance effect reappears once more, but this time the parallel resonant frequency is *below* the series resonant frequency. The phasing capacitor therefore provides two facilities. Firstly, it may be set up so that parallel resonance disappears completely and the crystal functions purely as a series tuned circuit. Alternatively, it may be set up so that the very high impedance associated with parallel resonance appears at any frequency, within the limits of control, either above or below the series resonant frequency. This second facility is of greater value than the first. Should there be an interfering signal frequency close to the series resonant frequency, the phasing control can be adjusted to offer maximum rejection to that frequency.

It is usual to give the phasing capacitor a maximum value of about twice Ch. This enables the parallel resonant frequency to cover an equal range on either side of the series resonant frequency.

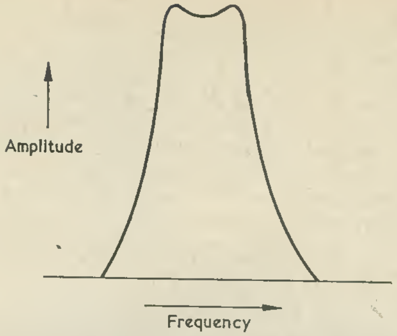

Fig. 7. Idealised band-pass response, as would be provided by the filter of Fig. 6

Fig. 5 shows a representative response curve, as offered by a crystal filter with associated tuned windings such as that shown in Fig. 4. As will be seen, there is a "notch" at one side of the main curve. This "notch" is due to the parallel resonance in the crystal and it can be made to travel along the curve on either side of the series resonance frequency by adjusting the phasing capacitor accordingly. When the phasing capacitor is at, or very near, the capacitance required for neutralising Ch, the notch disappears and the response curve becomes symmetrical.

BAND-PASS CRYSTAL FILTERS

A filter employing a single crystal, as in Fig. 4, is of greatest use for c.w. reception, where it is desired to receive a single frequency only. It is of less use for amplitude modulated signals because the selectivity it offers is too high to allow the modulating sidebands to be passed to the succeeding stage.

A high level of selectivity for amplitude modulated signals can be provided by employing two crystals in a circuit of the type shown in Fig. 6. The two crystals have series resonant frequencies spaced by the approximate bandwidth of the signals it is intended to receive, and the circuit exhibits the characteristic double-humped band-pass curve shown in Fig. 7. The crystal across which the preset variable capacitor is connected is that having the higher series resonant frequency, and the trimmer is adjusted for best overall response curve shape. In general, the trimmer will cause variation in parallel resonant frequency for both crystals.

The band-pass crystal filter of Fig. 6 is frequently referred to as a "half-lattice" filter. In a "full-lattice" filter, a further crystal follows the two band-pass crystals. More complex filter circuits are also feasible, a typical example being given by adding crystals which are connected directly across the i.f. transformer secondary of Fig. 6. If these further crystals have series resonant frequencies on either side of the band of frequencies it is desired to pass, they are capable of steepening the sides of the response curve.

I.F. AMPLIFIER FILTER POSITION

An important feature in the design of an i.f. amplifier incorporating a crystal filter is the choice of stages between which it should appear. A crystal filter should be incorporated at as early a point in the i.f. amplifier as possible, since there is less risk of cross-modulation with low level signals.[2] On the other hand, a crystal filter circuit offers considerably less gain than does a standard i.f. transformer, and it can be undesirable to have the crystal filter circuit immediately after the frequency changer stage if signal-to-noise ratio is low at this point of the receiver.

NEXT MONTH

In next month's issue we shall deal with another method of improving receiver i.f. selectivity, and shall discuss the Q-multiplier.

■

---

[2] Cross-modulation is given when one signal is modulated by another and occurs when both signals are applied to a device which causes distortion of their waveforms.

In your workshop

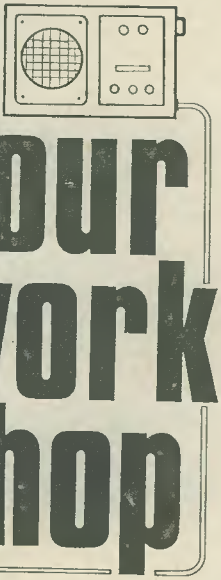

As is their custom every August, Dick and Smithy leave the cares of work behind them and sally forth for the day to sample the pleasures of the outside world. On this occasion they exchange the dusty atmosphere of the Workshop for that salty and invigorating air which is always ready to welcome the lusty sons of a seafaring nation

WITH THE CALL OF SEAGULLS ringing in his ears, Smithy applied himself diligently to the controls of the crane. Under the Serviceman's skilful hands the arm swung gracefully outwards, the claws at the end of its cable descending delicately towards the load they were to lift. Whilst the siren of a passing tug sounded its mournful wail the claws opened, then closed firmly upon the container.

Tense now, Smithy carefully watched the load as it was carried upwards. All seemed well and he allowed the thin confident smile of one who has complete mastery of the machine he commands to hover momentarily about his lips.

Then — the load shifted Smithy wrenched feverishly at the controls, but his dismayed eyes could only watch helplessly as the load slipped still further. For an agonising moment the claws appeared to grip once more, but then they finally relinquished their hold completely. The load fell heavily, crashing down to the surface below.

"Blast it," snorted Smithy, irritably thumping the glass case which housed the crane. "That's another hard-earned tanner gone."

"What I can't understand," remarked Dick, who had been watching the proceedings with airy detachment, "is why you were trying to pick up a lady's lipstick holder anyway. What on earth do you want a lady's lipstick holder for?"

"It was the only darned thing," replied Smithy irately, "that was sticking upwards. All the rest of the prizes in this infernal contraption are lying on their sides."

SHADING RING

Dick glanced carelessly at the heterogeneous array of objects laid out within the glass case containing the crane, then nonchalantly took a sixpenny piece from his pocket and placed it in the slot of the machine. Some 20 seconds later there was a gratifying clatter from the front of the case, whereupon Dick stooped down to retrieve his prize. He examined it critically.

"That's not *too* bad for a tanner," he pronounced. "A ball point pen of the type that costs three to four bob in the shops."

He took an old envelope from his pocket and tested the pen.

"Hmm, it writes quite nicely too," he remarked, clipping the pen into his shirt pocket. "Shall we try something else, Smithy?"

"Oh, all right then," growled the Serviceman. "Hallo, what's this?"

The pair stood and inspected an automated roulette wheel which went through continuous cycles of starting, stopping and paying out or otherwise, without benefit of croupier or any other human agency. Each change of function was accompanied by a vigorous clatter of relays.

"Blimey," commented Dick, impressed by this audible evidence of high power electrics at work. "Those relays aren't half clapping away there in *this* box of tricks."

"They certainly," chuckled Smithy, forgetting for the moment his unfortunate experience with the crane, "seem to be closing good and hard when they energise. I should imagine that there are a few solenoids in there as well as relays."

"Will they all," asked Dick, "be working direct from the a.c. mains?"

"I should imagine so", replied Smithy. "I don't know exactly what's fitted in this particular machine, of course, but I would think that, for the simple sequential operations that are required here, a.c. relays and solenoids would be perfectly satisfactory."

A frown appeared on Dick's face.

"Do you know, Smithy," he stated, "I can easily visualise an a.c. solenoid because I've seen plenty of these used for line standard switch changing in TV sets. But I've never quite understood the functioning of an a.c. relay."

Idly, Smithy dropped a penny into a slot in the machine. After several seconds the roulette wheel commenced to revolve.

"Why not?" he asked absently.

"Because," replied Dick, "the energising current in the relay winding will drop to zero twice during the a.c. cycle. What holds the armature in the energised position when the current in the winding is at zero?"

The roulette wheel slowed down and stopped. Smithy had lost, and there was a rattle as his penny joined the many previous ones in the maw of the machine. Smithy inserted another coin.

"That problem is overcome," he said over his shoulder, "by providing the relay with a shading ring."

"A shading ring?"

"That's right," confirmed Smithy. "It's fitted at the armature end of the core and it acts rather like a shorted turn."

"Well," commented Dick sarcastically. “I must say that that is an *extremely* helpful bit of information. Previously I didn’t know how an a.c. relay operated. I’m no wiser now and, what’s more, I’m saddled with the further fact that I don’t know how a shading ring works either!”

“We are,” Smithy reminded him gently, as his penny fruitlessly followed the preceding one into the interior of the roulette machine, “*supposed* to be having a day away from the Workshop. Presumably, that means having a holiday from electrical and electronic matters as well.”

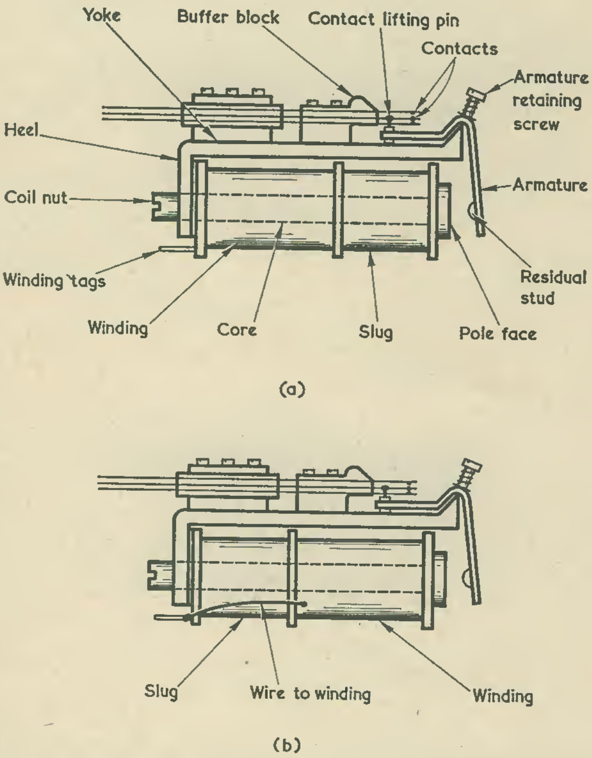

Fig. 1(a). A relay which is slugged so as to be slow to energise and de-energise
(b). Having the slug at the heel end of the core makes the relay slow to de-energise only

The Serviceman put yet another penny into the roulette machine then grandiosely waved his arm to indicate how much the scene around them differed from their usual workday surroundings. Gaily dressed young people strolled past them whilst, outside the small enclosure which housed the slot machines, the hot August sun beat down brightly. Beneath them they could hear the whispering murmur of the surf as it lapped against the piles of the pier to which, after having paid their sixpences, the pair had been allowed admittance. They had strolled the length of the pier several times and then had finally succumbed to the temptation of the slot machines. Smithy had armed himself with a small quantity of pennies from the attendant but Dick had declined to change any of his own money.

The spinning roulette wheel again came to a stop and, once more, the machine claimed Smithy’s offering without making any reciprocal payment. Grimly, Smithy inserted another coin.

“Surely,” said Dick, warming to his theme, “there’s no harm in explaining just *one* simple technical point to me. All that I want to know is this: how does the shorted turn effect provided by the shading ring enable the a.c. relay to operate?”

“You’re like nerve gas,” responded Smithy wearily. “You’re persistent, mate. The snag about answering your query is that I can’t explain how the shading ring works without first having to explain how slugs are used on d.c. relays to delay their energising or de-energising.”

“Fair enough,” replied Dick promptly. “Then let’s start off with slugs on d.c. relays.”

“All right, I give in,” sighed Smithy. “Well now, we’ll begin with those slugs. As I dare say you can imagine, some relay circuit applications require that a d.c. relay be slow to energise or slow to de-energise. The requisite time delay can be provided by components external to the relay. However, if the time delay required is short, as would occur for instance if it was desired that another relay fed from the same energising supply should operate before the delayed relay does, the delay can be provided by fitting the relay with a slug. In relay parlance a slug consists of a solid piece of copper, brass or a similarly highly conductive metal. It has a cylindrical outline and a hole down its centre, and it is fitted over thte core of the relay. A common position for the slug is at the armature end of the core.” (Fig. 1(a)).

Smithy absent-mindedly inserted another penny into the slot of the machine at his side. This action had become virtually automatic.

“Now,” he continued, “when a d.c. voltage is applied to the winding of a relay a magnetic field commences to build up. With a normal relay it builds up in a very short time but, with the slugged relay, the expanding lines of flux cut the metal slug and induce a current in it which sets up an opposing magnetic field. Thus, the slug opposes the build-up of the magnetic field and an appreciable time elapses before the field is sufficiently strong to allow the relay to energise.”

“I see,” commented Dick. “I must say that that sounds quite a crafty way of getting a time delay without using external components.”

“The energising time delay,” stated Smithy, “is not very long and can typically be about a tenth of a second. However, that’s just about all that is required in many relay circuits. The main snag with slugged relays is that the length of the delay varies according to the mechanical condition of the relay, together with such relay characteristics as the spacing between the armature and the core when the relay is de-energised and the contact spring pressure against which the armature has to work. In consequence, slugged relays are only used where a wide variation in the time delay is permissible.”

ALTERNATIVE SLUG POSITION

“If,” said Dick thoughtfully, “the slug opposes the build-up of the magnetic field on energising, does it also oppose the collapse of the field on de-energising?”

“Oh, definitely,” stated Smithy. “When the energising voltage is removed the collapsing field once more induces a current in the slug, and this in turn sets up an opposing field. The result is that the relay is slow to de-energise as well as being slow to energise. Since, when the relay is energised, there is almost a complete magnetic circuit given by the core, the yoke and the armature, the delay on de-energising is usually quite a lot longer than the energising delay and it may be of the order of half a second in some cases."

"It seems a pity," commented Dick, "that the slug causes a delay in de-energising as well. I should imagine that there are some applications where it would be of advantage to have a delay only when the relay energises."

"I'll agree," said Smithy, "that the slugged relay *does* have its limitations. There is a variation on the idea I've just described to you, though. This consists of a slugged relay which is slow to de-energise only."

"How does that work?"

"The de-energise delay is obtained by putting the slug at the heel end of the core. (Fig. 1 (b)). This time there is no slug between the winding and the armature and, whilst the slug still delays the build-up of the magnetic field at the heel end, it doesn't prevent the length of core near the armature becoming sufficiently magnetised to pull the armature over without a delay. You'll need a somewhat higher energising voltage to do this than would be needed if the slug were not fitted, but you still get a quick energising action. Once the armature has moved to the energised position an almost complete magnetic circuit is made up. When, therefore, the energising voltage is removed, the slug opposes the collapse of the magnetic field and the relay is slow to de-energise."

"That's neat," remarked Dick approvingly.

"It is, rather," agreed Smithy. "Anyway, now that I've told you how relays can be slugged to make them slow to energise and de-energise, or just slow to de-energise, I can at long last get on to a.c. relays."

"Blimey," said Dick, "I'd nearly forgotten about them! Let's recap a moment. Didn't you refer to a shading ring?"

"I did," agreed Smithy.

For the moment, he ceased his automatic insertion of pennies into the machine alongside him, and dug around in the pocket of his trousers. Eventually he produced a grubby and crumpled paper packet containing several small objects of indeterminate shape.

"What on earth have you got there?"

"It's a packet of fruit drops I bought last Christmas," replied Smithy. "Since we're having a break from work today, I thought it would be a good time to finish the last few off. Would you like one?"

Repressing a shudder, Dick hastily refused. The fruit drops were firmly stuck to the packet but Smithy managed to remove one, together with a thin shaving of paper. He popped the fruit drop into his mouth and proceeded to suck it vigorously. After some moments he put his fingers to his lips and delicately removed the sliver of paper, which had now become detached from the sweet.

"Honestly, Smithy," pronounced Dick with disgust, "it's impossible to take you anywhere. You're just *revolting*."

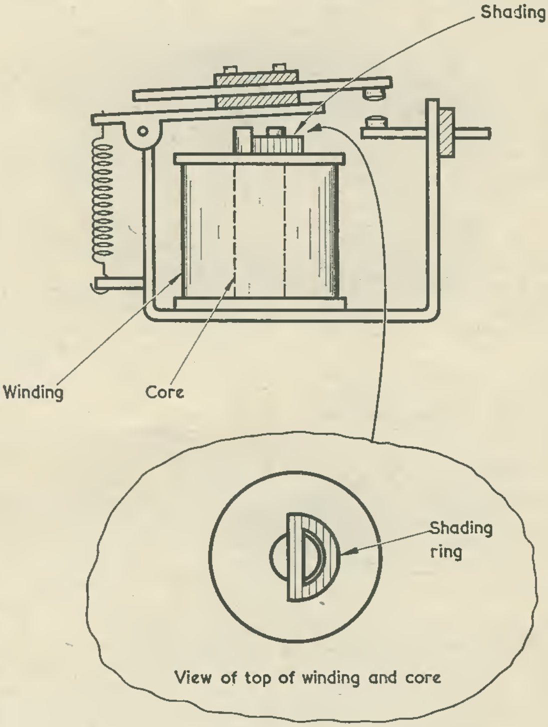

Fig. 2. A typical a.c. relay with shading ring

"Nonsense," replied Smithy briskly. "Lend me that pen you've just won so that I can next show you how the shading ring operates."

Smithy placed the paper packet on the top of the roulette machine, smoothed it out and, avoiding the humps imparted by the few remaining fruit drops, scribbled out a quick sketch. (Fig. 2).

"Here we are," he said. "Now this is a typical a.c. relay. It looks just like a d.c. relay with the exception that the core is laminated and there is a slot along the centre of the armature end of the core into which is fitted the shading ring. This is made of copper and it forms a shorted turn around half the end of the core. You can look upon it as being a mini-slug around the section of the armature it encloses, with the result that it similarly produces delays in change of flux."

"I think I can see what happens here," broke in Dick. "When the current in the relay winding goes through zero the armature will still be held in the energised position, this being due to the delayed magnetism maintained in that part of the core face which is encircled by the shading ring."

"You've got it," confirmed Smithy. "If you didn't have this shading ring, the armature would chatter away like billy-oh. Since the armature isn't held in the energised position as efficiently as occurs with a relay energised by d.c., it's usual to apply an alternating voltage to the winding of an a.c. relay which, on peaks, is quite a lot higher than the direct voltage equivalent would be. That's why some a.c. relays tend to energise with a heftier thump than do their d.c. counterparts."

ENERGISING CURRENT

The Serviceman put his hand in his pocket to extract a further penny. An exasperated expression suddenly appeared on his face.

"Darn it," he snorted, "this is my very last penny. I had at least 1s. 6d. worth of pennies left before I came up to this machine, and now they've all gone without my winning a single penny back. Oh well, I suppose I might as well put this last one in as well."

Smithy inserted his penny. After a due interval it, like its predecessors, disappeared fruitlessly into the bowels of the machine.

Dick turned and re-examined the machine with interest. After some thought he produced a penny of his own and inserted it, then waited for the whirling roulette wheel to stop. As soon as the wheel ceased turning, the machine obligingly disgorged 12 pennies. Picking up one of these, Dick reinserted it, and continued to watch the rotating wheel. Once again the wheel came to rest and, once again, there was a clatter as 12 more pennies rattled out of its workings. Nonchalently, Dick picked up all the pennies and put them in his pocket.

Smithy glared at his assistant furiously.

"Ye gods," he snorted, "you might as well have taken that money direct from my own pocket."

"The fact that I've won," replied Dick airily, "is just the luck of the draw."

"Perhaps it is," agreed Smithy reluctantly, "But it's still jolly infuriating so far as I'm concerned. Aren't you going to put in another penny?"

"I don't think I'll bother," replied Dick. "I've got enough from this machine now."

"Just put in one," wheedled Smithy. "Just put in one more penny, so that I can have the pleasure of seeing you lose."

"Oh, all right then," conceded Dick.

He took a penny from the jangling collection in his pocket and placed it in the slot of the machine. Five seconds later, the accommodating machine ejected a further 12 pennies.

"And that," said Dick firmly, "is all I'm going to put in. I don't believe in over-playing my luck."

Followed by a fuming Smithy, Dick wandered over to a line of five one-armed bandits, each of which was intended to operate with pennies. He placed a penny in one, pulled its handle, and received a prize of five pennies. He then wandered over to another and played two pennies successively. He pocketed his winnings of three pennies from the first penny and ten pennies from the second.

"Well," he remarked in a satisfied tone. "That's got the one-armed bandits done."

Smithy looked at his assistant with a wary respect.

"Is that all you're going to do," he asked. "Just play a couple of the machines and leave it at that?"

"Of course," said Dick. "It's the only way to win. If you play the machines *continually* you're bound to lose, because the machines are designed to pay out only a certain percentage of what goes in."

"Well, I'm going to have a go at them myself," said Smithy with determination. "Can you change a half-crown for me?"

"Certainly," replied Dick.

Carefully, he counted out 30 of his newly-won pennies and passed them to Smithy in exchange for the Serviceman's half-crown. The Serviceman turned round and squared up to the bandits.

"Seeing," he remarked, "that you're the gen-man on these gadgets, perhaps you can suggest to me how I should play them."

"Well," replied Dick thoughtfully, "you *could* put eight pennies in the first, six in the second, five in the third and seven in the fourth. That'll leave you four pennies for the fifth one. But don't blame me if you don't win anything."

Eagerly Smithy followed Dick's suggestion. But every penny he inserted simply disappeared without trace.

"This just isn't my day," he groaned disconsolately as the last of the machines clicked up its profitless array of fruit.

"I think," stated Dick slowly, "I might have another try at them myself now."

He walked along the machines inserting a penny in each. Every machine paid out a profit which he nonchalently pocketed. After completing this ritual he considered the entire row of machines pensively, then walked to the centre one, placed another penny in its slot and pulled its handle. It produced a further six pennies.

"You," growled Smithy, who had been observing this performance with mounting rage, "must be the jammiest blighter going. What annoys me most of all is the fact that it was *me* who set those darned bandits up for you."

"I warned you not to expect too much," returned Dick carelessly. "Would you like to have another half-dollar's worth of pennies?"

"No *thank* you," retorted Smithy shortly. "I'd rather gas on about technical things even. I've had enough of seeing you enrich yourself at my expense."

"As you like," said Dick, turning away from the one-armed bandits. "Well, we *were* talking about relays just now, so it might be worthwhile my telling you about something that happened when I was measuring the coil resistance of a relay recently. I'm not entirely certain about this, but I got a distinct impression that the ohmmeter needle was slightly more sluggish in reaching its final position than it was when I measured an ordinary resistor of the same value as the coil resistance."

"The meter needle quite probably *was* a bit sluggish," said Smithy, turning with relief, this time, to a subject on which he held the ascendancy over his assistant. "There's a fair bit of inductance in the coil of a common-or-garden relay and this could quite easily slow the movement of the meter needle a wee bit. If you want to see the same effect in a more pronounced manner you should try measuring the resistance of the primary of a large mains transformer with its secondaries open-circuit. You'll find that the ohmmeter needle takes a surprisingly long time to reach its final setting."

"Why's that?" asked Dick. "I don't seem to remember that mains transformer primaries have exceptionally high values of inductance."

"They haven't," confirmed Smithy. "Rough check, they're of the order of 10 henrys or so. However, what you have to remember is that they're wound with fairly thick wire, with the result that they have a low resistance. The time constant in an inductive circuit increases as inductance goes up and as resistance goes down."

INDUCTIVE TIME CONSTANT

"Hey, hang on a minute," broke in Dick. "What's all this talk about time constant? We're talking about resistance and inductance, not about resistance and capacitance."

"You get a time constant," Smithy explained patiently, "with series resistance and inductance in much the same way as you do with series resistance and capacitance. If you have a pure inductance in series with a resistor and you apply a battery across them (Fig. 3(a)) the time constant is the time needed for the current in the circuit to reach 63 per cent of the value which would flow through the resistance on its own. The rise in current follows an exponential curve in just the same way as does the voltage across a capacitor when you apply a voltage to it by way of a resistor. (Fig. 3(b)). I hardly need to remind you that, with the capacitor, we say that the time constant is equal to the time needed for the voltage across the capacitor to rise to 63 per cent of the applied voltage."

"And *that* time constant, in seconds," chimed in Dick confidently, "is equal to the capacitance in farads multiplied by the resistance in ohms."

"Correct," said Smithy. "If you're working with practical components it's easier, incidentally, to use microfarads and megohms, whereupon the time constant still comes out in seconds. Now, with inductance and resistance the time constant in seconds is equal to $\frac{L}{R}$, where L is in henry's and R is in ohms. So far as this relationship is concerned we know that the inductance in a coil offers opposition to a change in current, and this fact covers the fairly obvious point that time constant increases as inductance increases. At the same time, if we

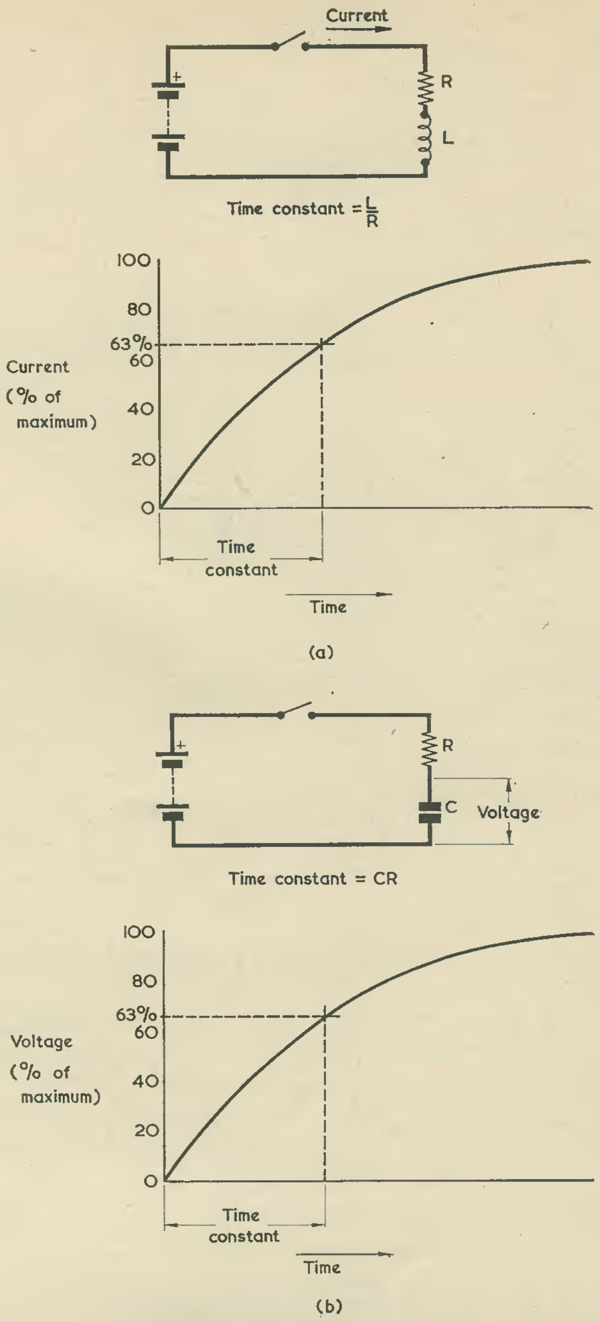

Fig. 3(a). Illustrating time constant in a circuit containing resistance and pure inductance

(b). The more familiar concept of time constant, with resistance and capacitance

have pure inductance in series with resistance the current increases until the voltage across the inductance is zero. The current is then at the maximum value, which is dictated by the series resistance, and it follows that if the resistance is low the current will take longer to reach its final value than if the resistance is high. And *that* is why the time constant of an inductance and resistance in series goes up as the resistance goes down."

"You mentioned a pure inductance just now," said Dick. "By that do you mean an inductance with no resistance or self-capacitance?"

"That's right," confirmed Smithy. "We can usually ignore the self-capacitance in an inductor when we're talking about time constant. But we can't ignore the resistance, because the turns of wire which make up the inductance provide a relatively high value of resistance. We can look upon a practical inductor in terms of a pure inductance in series with a resistor. That resistor has the same value as the resistance of the inductor winding."

"If," said Dick thoughtfully, "current takes an appreciable time to increase to its final value in an inductor, it means that a relay can never energise immediately the energising voltage is applied to its coil."

"It can't," agreed Smithy. "The relay must take a finite period to energise, although this period, with specialised high-speed relays, can be very short indeed. Reverting to normal relays having the conventional armature which is pulled towards the core, the existence of a time constant explains why these energise quicker when the energising voltage increases. They still take the same time to reach 63 per cent of the maximum current, as dictated by the resistance of the winding, but this maximum current increases as energising voltage increases. As a result the *rise* in current after the energising voltage is applied is steeper, and the increasing current passes the level which operates the relay earlier."

"That's an interesting point," remarked Dick musingly. "I've always noticed how much more quickly a relay can energise when the energising voltage is increased, but I'd never realised that this was due to the time constant of the coil inductance and its resistance."

"Well, you do now," chuckled Smithy. "An intriguing thing about the windings of normal relays is that they have two time constants!"

"*Two* time constants? How on earth does that happen?"

"When," said Smithy in reply, "the relay is de-energised, there is a relatively large gap between the core and the armature, with the result that the only iron increasing the air-cored inductance of the coil is that in the core. But when the relay energises the armature comes up close to the core, whereupon there is almost a complete magnetic circuit of iron around the coil. The inductance of the coil can then increase by as much as five times or so."

"Blimey," commented Dick, impressed. "That's something I hadn't thought about before. Does this have any effect on energising current?"

"There's no important practical effect," replied Smithy, "but the change in inductance does cause the

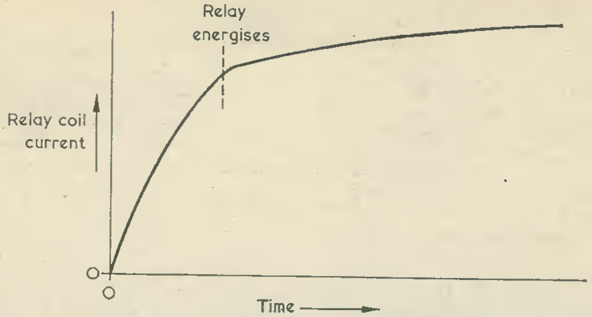

Fig. 4. Curve showing the increase of coil current in a relay from the instant of applying energising voltage

curve showing energising current against time to have rather a peculiar shape. (Fig. 4). When the energising voltage is initially applied the relay coil has a relatively low inductance, whereupon the current rises fairly quickly. As soon as the relay energises the inductance increases, as also does the time constant. The result is that the current increases to its final value at a lower rate. The overall curve consists of two exponential curves, one changing to the other when the relay energises and the armature pulls in."

DOMESTIC SERVICE

By now, the pair had left the enclosure with the gaming machines and were once more out in the open, wandering along the length of the pier.

"Do you feel," asked Dick, "like having a bash at some more slot machines?"

"Not blooming likely," replied Smithy promptly. "And certainly not when there's someone like you around. It's a wonder that the slot machine proprietors don't have you barred from their premises."

They passed a row of ancient and dilapidated machines which, presumably, were not considered worthy of protection from the wind and rain. A gleam appeared in Smithy's eye.

"Wait a minute, though," he remarked. "Perhaps I *might* speculate just a little after all. Give me six of those ill-gotten pennies of yours, Dick."

Surprised at Smithy's abrupt change in attitude, Dick handed over the pennies and received Smithy's sixpence in return. He then followed the Serviceman as the latter approached the weather - beaten machines. Dick surveyed them with youthful and uncomprehending eyes.

Suddenly, as Smithy's penny disappeared into the entrails of the first machine, a penny similarly dropped for Dick.

"Why, Smithy," he ejaculated, in shocked and outraged tones, "you *dirty* old man!"

But Smithy had no ears for his assistant, and he had now surrendered himself to the Edwardian sumptuousness of an earlier time, when domestic service offered at least as much in perquisites as it did in payment.

We may in consequence now leave the Serviceman as he busily cranks the handle of his machine, and we can be fully confident that his day has at long last been made complete. For Smithy's pennies were revealing to him some of those domestic perks of yesteryear. He had entered the forbidden world of 'What The Butler Saw'. ■

RECORD CHANGERS FOR JAPAN

BSR, leading manufacturers of record changers, are for the first time sending a large consignment of record changers in four huge freighter containers overland by the Trans-Siberian Railway through Russia to their destination in Japan.

The consignment of MA.65 automatic changers left BSR's Stourbridge Factory on June 30th and travelled across Belgium, West Germany, Switzerland, Austria, Hungary and Russia before arriving at the Sony factory in Japan, 40 days and 8,000 miles later.

BSR are completely container minded because the problems of possible damage and pilferage are eradicated and in addition this provides the best door-to-door service. They have been forced into this position because containers have not yet been made available on the sea journey between England and Japan. BSR already use containers to U.S.A., Canada, South Africa, Australia and Europe.

The watchword of the Company is reliability and they take every possible precaution to ensure that the units arrive at the customer's factory in perfect condition.

The consignment is expected to take only two weeks longer than the sea journey. The Trans-Siberian railway will convey the goods right across Russia to the port of Nakhodka and then the consignment will be shipped to Yokohama in Japan.

BSR, renowned for its export achievements, already claim nearly 50 per cent of the Japanese market as well as supply almost half the total of the world demand for Record Changers.

HIGH FREQUENCY CRYSTAL CONTROLLED OSCILLATORS

by

J. B. DANCE, M.Sc.

Some notes on crystal controlled transistor oscillators running either on crystal fundamental frequency or overtones

CRYSTAL CONTROLLED OSCILLATORS ARE OF CONsiderable importance both to the professional engineer and to the amateur experimenter. They are, of course, used whenever a stable output frequency in the range of a few kHz to a few hundred MHz is required. Two very useful (but very simple) circuits will be described which have been designed by the Fairchild Company for use at relatively high frequencies. Each of these circuits employs only one transistor, this being a C444 silicon planar type which is readily available at a very economical price.

10 MHz CIRCUIT

The circuit of Fig. 1 is designed for use with a series resonant type crystal of an equivalent resistance of about 20Ω and of a frequency of about 10 MHz. In practice, however, the type of crystal and the frequency is not critical. This design has the advantage that no tuned circuit (other than the crystal itself) is employed and therefore the constructor does not need to bother with coil winding and arranging suitable screening for the coils.

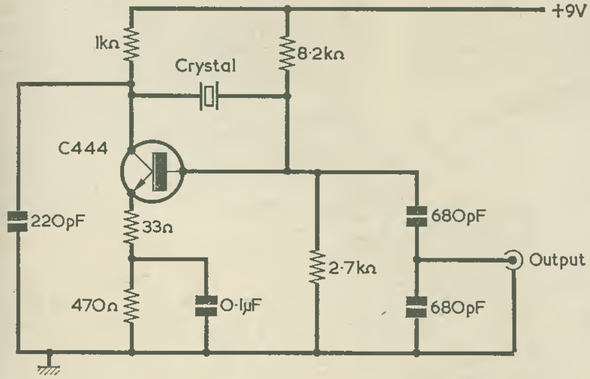

Fig. 1. A simple 10MHz crystal controlled oscillator

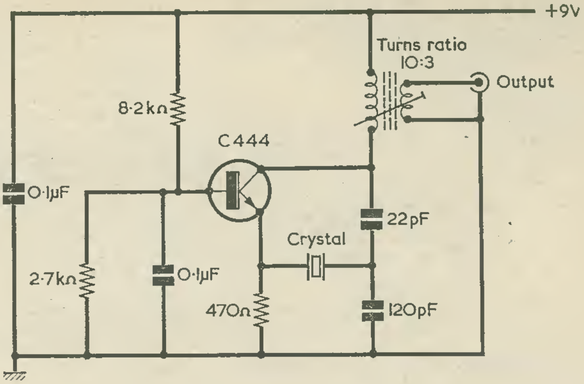

Fig. 2. An oscillator employing an overtone crystal

Frequency selective feedback occurs from the collector of the transistor through the crystal to the base. With a 10 MHz crystal the circuit provides an output of about 1 volt peak-to-peak with a 50Ω load. The frequency stability is about one part per million for power supply variations of ±20%. The power consumption is only 4.5mA at 9 volts.

50 MHz CIRCUIT

At frequencies above about 20-30 MHz crystal oscillators operate on a harmonic of the fundamental crystal frequency. A tuned circuit is employed to select a suitable harmonic and to reject all other unwanted harmonics together with the fundamental frequency. A circuit of this type which can be used with the highest overtone crystal frequencies available (up to about 200 MHz) is shown in Fig. 2. The particular circuit shown is designed for use at about 50 MHz.

As in the case of the circuit of Fig. 1, a Fairchild C444 transistor is employed, but the base is earthed with respect to high frequencies. Frequency selective feedback takes place from the collector via the 22pF capacitor and the crystal to the emitter of the transistor. The output transformer may be tuned for maximum output of the required harmonic voltage.

The circuit of Fig. 2 provides an output of about 0.2 volts at 50 MHz with a load resistance of 50Ω. The power consumption is about 3.5mA at 9 volts.

Suitable crystals for both circuits may be selected from the Cathodeon range. It is recommended that the resistors used in these circuits should be 5% ½ watt types.

Reference

Fairchild Industrial Circuit Handbook, First issue, June, 1967.

EDITOR'S NOTE

The full address of the crystal manufacturing company mentioned is Cathodeon Crystal, Ltd., Linton, Cambridge. The C444 transistor may be obtained from L.S.T. Electronic Components, Ltd.

■

FOR THE SWL . . .

QSL'ing

by

FRANK A. BALDWIN

The subject of QSL'ing is a large one and could not possibly be dealt with here in full. However, some aspects of the subject could be aired and one of these is the problem – to whom should the s.w.l. send a report.

In the main, with Amateur band devotees, most reports are nowadays to s.s.b. operators and these, with few exceptions, are well aware of their aerial transmitter capabilities. As the vast majority of s.w.l. operators use this mode of reception, it is an obvious fact that the s.s.b. transmitting fraternity are flooded with unwanted and unsolicited s.w.l. reports. It follows therefore that relatively few listeners will receive a QSL card in return, although there must be some exceptions to this general rule. Some of these exceptions will be where the transmitting enthusiast has erected a new aerial or installed a new transmitter or, alternatively, has made some modification to these installations and is interested to know the results being achieved. Another obvious exception is the reception of a new licence holder's signal.

The listener operating over the s.s.b. portions of the various amateur bands would do well to report on those transmissions where new equipment has been installed and where the operator is specifically asking for such reports.

A better report/reply ratio may be achieved by sending a QSL card and a report sheet, together with an International Reply coupon direct to the transmitting address by air mail. A QSL card alone does not convey sufficient information to enable the operator of the station concerned to make a balanced judgement of his station's efficiency and radiation pattern according to the conditions prevailing at the time of transmission.

A much better method of obtaining the coveted QSL card is where the s.w.l. operates over the c.w. parts of the bands. A c.w. transmitting enthusiast receives far less s.w.l. reports than does his a.m. or s.s.b. counterparts. Two recent examples of this were the writer's c.w. reports to PZ1DD who replied with his card and a most appreciative letter by air mail. This report was sent for the reason that, during a 14MHz QSO, he stated he was a brand new callsign holder a week old. He could therefore have had little idea of his aerial radiation pattern.

The second occasion was that of a c.w. report to W3TV on 1804kHz during the Trans-Atlantic Top Band Tests earlier this year. This is what W3TV had to say – "Years ago I decided to QSL only for two-way contacts but your card is different. Appreciate very much your comments about my transmissions on 1804kHz 1-26-69". (26-1-69). "I had raised a W6 earlier so was trying again. Didn't think I could be heard in UK. Your card therefore was a pleasant surprise, also thanks for the comparisons with other W's you heard".

The above quoted paragraph tells its own story. The moral would appear to be – if you want an excellent report/reply ration, learn the Morse code and select those stations likely to be appreciative of a report.

If you are an a.m. and an s.s.b. only s.w.l. the writer would suggest that you commenced QSL'ing operations on that band most neglected by listeners – this being Top Band (1.8 to 2.0MHz). It is a sad fact that very few listeners pay any attention to this band but it will be found to be quite active, often carrying many s.s.b. transmissions that have a Dx rating. Dx is, among other considerations, relative to the band in use and, where the s.w.l. is situated over 150 miles from the transmitter, it can be generally be said that the received transmission represents relative Dx. Many of the transmitting fraternity commence operations by radiating their signals on this band and the writer often regards Top Band as a "nursery" for many of the new licence holders.

From the foregoing, it is apparent that many of these transmitting enthusiasts, newly on the air, are greatly interested in their aerial radiation characteristics and are often intrigued to learn of the stations which called them in reply to their CQ calls but were not worked. A short period report to a newly licenced transmitter will almost certainly bring an appreciative reply.

A great deal of enjoyment and fun may be had by the listener who sets out to verify as many counties as possible in the U.K. – some of which are extremely difficult to receive, not only by virtue of distance but also by the apparent scarcity of Top Band operators in a particular county and Dxpeditions are often engaged in to put such counties on the map. During such Dxpeditions, all sorts of fun and games are apparent – and on several occasions the writer has listened to phone transmissions being radiated from a fine aerial wire suspended from a balloon! On one occasion, during the hours of darkness, the transmitting operator was astonished to find that his signal was being satisfactorily received at good signal strength despite the fact that subsequent investigation by him revealed that the balloon and wire were resting on the ground!

Many years ago, the writer once listened to an a.m. transmission between a local licence holder and a local pirate station – the latter using language not exactly that of the drawing room! The pirate being held in conversation, another call-holder toured the area with a DF receiver searching for him. He was located and effectively silenced!

The writer, on another occasion, listened to a.m. transmission of a portable station situated atop a high hill. It was pouring with rain, blowing half a gale and the relief operators and s.w.l's were struggling manfully to re-erect blown down tents. Sitting in the comfort of the shack, one could well imagine the plight of these doughty enthusiasts!

A list of UK counties may be found in *Radio Amateur Operator's Handbook* available from the publisher's of this magazine. For those listeners requiring full information on QSL'ing, they should obtain a copy of the *Art of QSL'ing* published by the ISWL – see small advertisement for the address. ■

WORLD RADIO–TV HANDBOOK

The 1969 Summer Edition of this well-known publication is now available and may be obtained, ex-stock, from the Modern Book Company, 19 Praed Street, London, W.2, price 17/6 plus 1/- postage and packing. Among the 184 pages will be found a complete short wave Broadcast Station List together with much other useful information.

Radio Topics

By Recorder

THERE APPEARS TO BE QUITE A lot of controversy these days amongst the amateur radio fraternity concerning the relative merits of valves and transistors. Despite the fact that the valve has gained the description of being "old-fashioned", many of the enthusiasts who design and build their own equipment prefer to stick to this device, mainly on the grounds that valve circuits are easier to understand and to get into working order. Also, long familiarity with valves has enabled the probable performance of a new valve design to be readily assessed before it is actually built.

VALVES Vs. TRANSISTORS

Speaking for myself, nearly all my recent constructional projects have employed transistors, but by no means does this mean that I am against the use of valves for home-constructor equipment. The main reason why the gadgets I've been knocking up have used transistors is because they have nearly all required electronic switching devices, for which function transistors are far, far better than are valves. Had the projects consisted of equipment requiring r.f. and a.f. oscillators, or r.f. and a.f. amplifying stages, my hand could well have strayed towards the drawer in which I keep my ⅝in. (for B7G valveholders) and ¾in. (for B9A valveholders) Q-Max chassis cutters. Indeed, having been brought up in a generation which would have looked at the innards of a present-day u.h.f. transistorised TV tuner with incredulous disbelief, I feel that it is very pleasant every now and again to settle back into a world where all the cathodes glow away benignly, and where all the electrons nip off smartly towards the anodes without encountering a single hole travelling in the opposite direction.

Really, of course, this transistor versus valve argument operates at two quite distinct and separate levels. One level applies to the equipment manufacturer, whilst the other applies to the home-constructor.

Let us take the equipment manufacturer first. If he is engaged in strictly commercial manufacture as occurs, for instance, if he produces domestic radio and TV receivers, he has no option other than that of making products which sell at least as well, and preferably better, than those of his competitors. In consequence he has to manufacture products of acceptable price, performance and reliability. There is little doubt that price can be kept down, performance maintained at at least the same level, and reliability increased by using transistors instead of valves. In consequence, the manufacturer *has* to go from valves to transistors. I will agree at this point incidentally, that the change-over from valves to transistors has not been so fast in TV receivers as with sound radios; but until recent years a TV set normally required at least one valve for the line output stage, whereupon it was reasonable to expect to find a few other valves on the chassis with it. As a result, TV transistors appeared initially in the tuner section and in the i.f. strip.

If the manufacturer is producing specialised items such as measuring or medical equipment, the question of cost is not so relatively important as are those of performance and reliability. These last two factors still, nevertheless, inexorably steer the manufacturer away from the valve and towards the transistor.

Thus, like it or not, the manufacturer has little alternative but to

go from valves to transistors. Since, manifestly, the transistor does the job in this field better than does the valve it follows that, at manufacturing level, the transistor is superior to the valve. And that is that.

THE HOME CONSTRUCTOR

When we turn to the home-constructor we find that we have to argue against a completely different set of parameters. Let us start with cost. Unlike the manufacturer, who buys his components in terms of thousands, tens of thousands and hundreds of thousands, the home-constructor buys his components in quantities ranging from 1-off to a dozen. The home-constructor hunts around and buys his valves for a few bob each or his transistors for a few bob (sometimes considerably less) each. With projects requiring up to half a dozen valves or half a dozen transistors, there's not a great difference either way. At first the valve enthusiast loses out so far as the requisite power supplies are concerned, since he requires a mains transformer, a rectifier and smoothing capacitors, instead of the simple and ubiquitous PP9 battery employed for much transistor equipment. However, after you've got through a dozen or so PP9 batteries, there isn't all that much saving *there*, either!

It is possible, but by no means probable, that the assembly at home of a piece of equipment employing valves takes longer than does the assembly of its transistor equivalent. But the extra time is usually due to the chassis-work involved, and the keen constructor normally *enjoys* bashing out his chassis. He does not, like the manufacturer, have to think of assembly time in terms of pounds, shillings and pence.

Again, a finished job using valves will be a lot larger in physical size than its transistor counterpart. So far as the manufacturer is concerned, physical size has to be paid for in terms of the metal involved, the cabinet dimensions and such things as the space taken up by production line jigs. All these are factors to which the home-constructor need pay very little attention at all.

Performance comes next. If, as occurs in many cases, a similar performance is possible with either transistors or valves, why should not the constructor choose valves?

Finally, there is the question of reliability. To my mind, a well-designed item of equipment incorporating transistors has higher inherent reliability than has a similarly well-designed item of equipment incorporating valves. Even if we ignore the comparative reliability of transistors and valves themselves, this last statement must be true because transistor equipment uses lower supply voltages and runs cooler. Against this argument is the fact that the finished equipment, whether incorporating valves or transistors, will usually be kept under the fond eye of its builder, who will soon root out any component which, over the years, ceases to perform as well as it should do.

My notes up to now seem to present most of the salient arguments in this transistor versus valve controversy. To sum up let me say that, in manufactured equipment, valves have been almost completely replaced by transistors because tran-

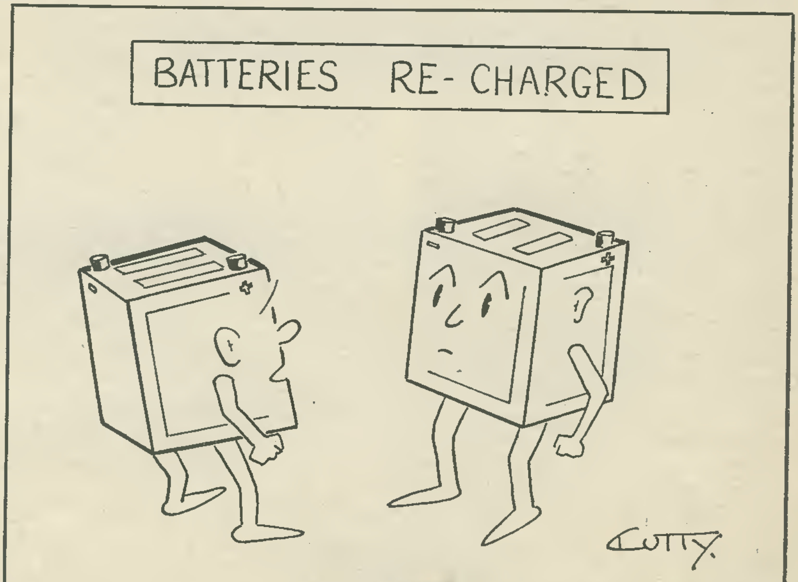

" How revolting ! "

sistors ensure lowered costs and increased reliability. So far as the home-constructor is concerned, however, the cost factor does not significantly apply, with the consequence that the only argument against his using valves is that the reliability of the equipment he builds may be lower.

I haven't yet dealt with one of the charges that is frequently levelled against the home-constructor who prefers to build with valves instead of transistors. The accusation is that he is refusing to follow "progress". But the "progress" which the home-constructor is expected to follow is mainly dictated by economic factors which don't even apply to him. Besides, the home-constructor is indulging in a hobby, and if he enjoys his hobby more fully by sticking to valves then he is perfectly entitled to do so, and jolly good luck to him, too.

So I, for one, although personally orientated rather more towards the transistor than towards the valve, do *not* concur with the argument that the valve should be ousted by the transistor from home-constructor projects. On the contrary, I support the valve-user to the full and consider that, if he wants to employ valves in his hobby, he is perfectly justified in his choice.

I similarly, of course, support the transistor enthusiast who prefers to use transistors. There is plenty of room in this vastly rewarding hobby of ours for both valves and transistors, and I am certain that there are many exciting home-constructor design approaches yet to come which will take advantage of the best points given by either of these two basic amplifying devices.

F.E.T. PRECAUTIONS

A minor point which has been intriguing me a little recently has to do with field effect transistors. These have been available on the home-constructor market for quite some time now, the types most commonly encountered being n-channel f.e.t.'s. Some, like the R.C.A.40468, have insulated gates. Others, such as the Motorola MPF103, MPF104 and MPF105 have junction gates which are reversed biased from the channel by the circuits in which they are inserted.

Most of us know that it is necessary to ensure that high static voltages are not applied to the gate of an insulated-gate type of f.e.t., or the gate insulation may break down. The minimum requirement is that the tip of the soldering iron used for soldering such f.e.t.'s into circuit should be reliably earthed. Otherwise, the voltage on the soldering iron tip, due to leakage resistance and capacitance between the element and the soldering iron body, could well destroy the gate insulation. Some insulated-gate f.e.t.'s are supplied with a piece of metal foil inserted between the lead-out wires, this being removed after it has been soldered into position. The 40468 is supplied with its leads short-circuited together by a metal eyelet.

It is evident that very great care has to be used when soldering in these insulated-gate f.e.t.'s. My own approach is to wrap a piece of thin wire around the leads to short-circuit them during soldering, removing this afterwards. An alternative scheme, mentioned by G. A. French in recent "Suggested Circuit" articles, is to wire up a transistor holder and insert the f.e.t. into this after all connections to the holder have been made.

Is it necessary to observe similar safeguards with a junction f.e.t.? One has to be guided here by the makers, who do not take quite the same elaborate precautions as they do with insulated-gate f.e.t.'s. It would seem safe to wire in a junction f.e.t. without initially short-circuiting its leads together, but it would definitely still be necessary to use an earthed soldering iron. Incidentally, all supplies in the equipment in which the f.e.t. is being installed should be out of circuit during soldering, including in particular any connections to the mains supply which may exist. There's no point in using an earthed soldering iron if the circuits to which the f.e.t. is being connected carry the fatal voltage! ■

EMI—ANOTHER NEW PRODUCT

As an addition to their range of associated equipment, the Valve Division of EMI Electronics has taken on the exclusive distribution in the United Kingdom of a line of photomultiplier cooling chambers, manufactured by Products for Research, Inc, U.S.A.

In astronomy, spectrophotometry, scintillation counting, biology and other low light level work, these versatile chambers permit maximum dark current reduction for optimum data.

Thermoelectric units are available for continuous cooling to −30°C and, by means of the automatic temperature stabilising circuitry, the cathode temperature can be maintained within ± 0.5°C, allowing remote station operation. Dry ice models are also available for cooling to −70°C.

AUDIO AMPLIFIERS

16 Transistor and Valve Designs for the Home Constructor

Amplifiers for Tuner Units, Record Players, Tape Recorders, Public Address, etc., etc.

Includes contributions by such well know authors as A. S. Carpenter, A. Kinloch, E. Govier, G. A. French, F. G. Rayer, P. F. Bretherick, K. Jones, D. Aldous, R. Murray-Shelley, C. Swires, G. A. Stevens and V. E. Holley.

Specially selected from The Radio Constructor

Edited by J. R. Davies

PRICE 10s. 6d.

124 pages *Postage 8d.*

TO DATA PUBLICATIONS LTD 57 Maida Vale London W9

Please supply..........................copy(ies) of "Audio Amplifiers," Data Book No. 18

I enclose cheque/crossed postal order for....................

NAME ....

ADDRESS ....

....

....

....

BLOCK LETTERS PLEASE

SMALL ADVERTISEMENTS

Rate: 9d. per word Minimum charge 12/-
Box No. 2/- extra.

Advertisements must be prepaid and all copy must be received by the 4th of the month for insertion in the following month's issue. The Publishers cannot be held liable in any way for printing errors or omissions, nor can they accept responsibility for the *bona fides* of advertisers. (Replies to Box Numbers should be addressed to: Box No. ——, *The Radio Constructor*, 57 Maida Vale, London, W.9.)

SERVICE SHEETS. Radio. Television. Transistors. Tape Recorders. Record Players (1925-1969). S.A.E. enquiries.—Hamilton Radio, 54 London Road, Bexhill, Sussex.

BUILD IT in a DEWBOX robust quality plastic cabinet. 2in. x 2½in. x any length. S.A.E. for details. D.E.W. Ltd., 254 Ringwood Road, Ferndown, Dorset. Write now—right now.

PROFESSIONALLY MADE CONTROL PANELS from 4d. sq. inch. 16/18 gauge aluminium, cut, drilled, spray painted and legend. Send full size drawing for quotation. C. S. Conduit, 7 Millbrook, Salisbury, Wilts.

UFO DETECTOR CIRCUITS. Data, 10s. (refundable). Para-physical Laboratory (UFO Observatory), Downton, Wilts.

YOU CAN EARN EXTRA CASH in the comfort of your own home. Send now for free details to: Pittville Products, (RC51), 41 Canterbury Walk, Cheltenham, GL51 5HN.

BOOST! B.B.C.1-I.T.A. VHF Amplifier, Setside, battery powered. 50/-. Specify channels.

BOOST! UHF Amplifier, Setside, battery powered. 55/-. Covers all stations in area. Specify channels. B.K. Equipment, 7 St. George's Road, Belton, Gt. Yarmouth, Norfolk.

JOIN THE INTERNATIONAL S.W. LEAGUE. Free Services to members including Q.S.L. Bureau, Amateur and Broadcast Translation, Technical and Identification Dept.—both Broadcast and Fixed Stations, DX Certificates, contests and activities for the SWL and transmitting members. Monthly magazine, *Monitor*, containing articles of general interest to Broadcast and Amateur SWLs, Transmitter Section and League affairs, etc. League supplies such as badges, headed notepaper and envelopes, QSL cards, etc., are available at reasonable cost. Send for League particulars. Membership including monthly magazine, etc., 35s. per annum. Secretary ISWL, 60 White Street, Derby.

"MEDIUM WAVE NEWS" Monthly during DX season. —Details from: K. Brownless, 7 The Avenue, Clifton, York.

MUSICAL MIRACLES. Send s.a.e. for details of Drum Sound Modules, versatile bass-pedal accompaniment unit, self-contained with unique effects. Kits for Waa-waa pedals 47/-. Also 50μA meters 25/- each. New. D.E.W. Ltd., 254 Ringwood Road, Ferndown, Dorset.

FOR SALE: Newnes *Radio & TV Servicing*. Volumes 1 to 5. £7 10s. Marchant, 27 Long Street, Tetbury, Glos.

LARGEST SUPPLIERS OF SERVICE SHEETS: TV, Radio, Tape, Recorders, Record Players, Transistors, Stereograms, Radiograms. Only 5/- each, plus s.a.e. Uncrossed P.O.'s please, returned if service sheets not available. We have the largest supplies of service sheets (strictly by return of post). Please state make and model number alternative. Mail order only. Please mention *The Radio Constructor* when answering this advert. Mr. C. Caranna, 71 Beaufort Park, London N.W.11.

continued on page 61

BENTLEY ACOUSTIC CORPORATION LTD.

38 Chalcot Road, Chalk Farm,
LONDON, N.W.I.
01 - 722 9090

The Old Police Station
Gloucester Road
LITTLEHAMPTON, Sussex
PHONE 6743

Please forward all mail orders to Littlehampton

5V4G	7/6	EBF89	6/3	EY87	6/-	PY82	5/-	X41	10/-	BF163	4/-
5Z4G	6/9	EC92	6/6	EZ40	7/3	PY83	5/6	2N404	6/-	BY100	3/6
6AT6	4/-	ECC81	3/9	EZ80	4/3	PY88	6/3	2N1756	10/-	BY126	5/-
6/30L2	12/6	ECC82	4/6	EZ81	4/6	PY800	6/6	2N2147	17/-	BY127	5/-
6BW6	12/9	ECC83	4/6	HVR2	8/9	PY801	6/6	2N2297	4/6	BYZ11	5/-
6BW7	11/-	ECC84	5/6	KT88	29/-	U19	34/6	2N2369	4/3	BYZ12	5/-
6F1	8/9	ECC85	5/-	KTW62	10/-	U25	13/-	2N2613	7/9	BYZ13	5/-
6F23	13/3	ECC88	7/-	PABC80	7/3	U26	11/9	2N3053	6/6	OA81	1/9
6L6GT	7/9	ECC189	9/6	PC86	9/6	U33	29/6	2N3121	50/-	OA95	1/9
10F1	15/-	ECF80	6/6	PC88	9/6	U35	16/6	2N3703	3/9	OA182	2/-
10P13	13/-	ECF82	6/6	PC95	8/3	U37	34/11	2N3709	4/-	OA200	1/-
20D1	13/-	ECF86	9/-	PC97	8/6	U45	15/6	2N3866	20/-	OC22	5/-
20L1	13/-	ECH42	10/-	PC900	8/3	U191	12/6	2N3988	10/-	OC23	5/-
20P4	18/6	ECH81	5/9	PCC84	6/-	U251	16/-	AC113	5/-	OC24	5/-
30C15	13/6	ECH83	8/-	PCC85	6/6	U301	11/-	AC127	2/-	OC25	5/-
30C17	12/6	ECH84	7/-	PCC88	9/9	U404	7/6	AC154	5/-	OC26	5/-
30C18	8/9	ECL80	6/6	PCC89	9/6	U801	18/-	AC156	4/-	OC28	5/-
30F5	13/6	ECL82	6/-	PCC189	9/6	U4020	6/9	AC157	5/-	OC30	5/-
30FL1	15/-	ECL83	9/-	PCF80	6/6	UABC80	5/9	AD140	7/6	OC35	5/-
30FL12	16/-	ECL86	8/-	PCF82	6/-	UBC81	7/-	AD149	8/-	OC36	7/6
30FL14	12/6	EF22	12/6	PCF84	8/-	UBF80	5/9	AD162	9/-	OC38	11/6
30L15	13/9	EF37A	7/-	PCF86	9/-	UBF89	6/9	AF114	4/-	OC41	10/-
30L17	13/-	EF41	9/6	PCF801	7/-	UC92	5/6	AF119	3/-	OC44	2/-
30P4	12/-	EF80	4/6	PCF802	9/-	UCC84	8/-	AF125	3/6	OC45	1/9
30P4MR	17/6	EF85	5/3	PCL82	7/-	UCC85	6/6	AF139	11/-	OC46	3/-
30P12	13/-	EF86	6/-	PCL83	9/-	UCF80	8/3	AF180	9/6	OC70	2/3
30P19	12/-	EF89	4/9	PCL84	7/6	UCH21	9/-	AFZ12	5/-	OC71	2/-
30PL1	15/-	EF91	3/3	PCL85	8/3	UCH42	9/9	ASY29	10/-	OC72	2/-
30PL13	15/-	EF183	6/-	PCL86	8/6	UCH81	6/6	BA102	9/-	OC75	2/-
30PL14	15/-	EF184	6/-	PEN45DD	12/-	UCL82	7/-	BA115	2/8	OC78	3/-
AC2PEN	19/6	EH90	6/6	PFL200	12/-	UCL83	10/-	BA129	2/6	OC78D	3/-
AC2PENDD	19/6	EL32	3/6	PL36	9/6	UF41	9/6	BA130	2/-	OC81	2/-
CL33	18/6	EL33	12/-	PL81	7/3	UF42	9/-	BC107	4/-	OC81D	2/-
CY31	7/6	EL41	9/3	PL82	6/6	UF80	6/9	BC108	3/6	OC82	2/3
DY87	5/9	EL84	4/6	PL83	6/6	UF85	6/9	BCY10	5/-	OC83	2/-
E88CC	12/-	EL95	5/-	PL84	6/3	UF86	9/-	BCY12	5/-	OC84	3/-
EABC80	6/-	EM80	5/9	PL500	12/-	UF89	6/3	BCY33	5/-	OC123	4/6
EAF42	8/9	EM81	6/9	PL504	12/6	UL41	9/6	BCY34	4/6	OC169	3/6
EB91	2/3	EM84	6/-	PL509	28/9	UL84	6/6	BCY38	5/-	OC172	4/-
EBC41	8/6	EM85	11/-	PL802	15/-	UM80	5/-	BCY39	4/6	OC200	4/4
EBC81	5/9	EM87	7/3	PY32	9/6	UY41	6/9	BFY50	4/-	OC202	4/6
EBF80	6/-	EY51	6/9	PY33	9/6	UY85	5/6	BFY51	4/-	OC203	4/6
EBF83	8/-	EY86	6/-	PY81	5/3	VP4B	10/6	BFY52	4/6	OC205	7/6

Terms of business: Cash with order only. No C.O.D. Post/Packing 6d. per item. Orders over £5 post free. All orders despatched same day as received. Complete catalogue including transistor section and components with terms of business 10d. Any parcel insured against damage in transit for 6d. extra.
Business hours 9 a.m.–5.30 p.m. Saturdays 9 a.m.–1 p.m.

TECHNICAL TRAINING by ICS IN RADIO, TELEVISION AND ELECTRONIC ENGINEERING

First class opportunities in Radio and Electronics await the ICS trained man. Let ICS train YOU for a well-paid post in this expanding field.

ICS courses offer the keen, ambitious man the opportunity to acquire, quickly and easily, the specialized training so essential to success.

Diploma courses in Radio TV Engineering and Servicing Electronics, Computers, etc. Expert coaching for:

- * C. & G. TELECOMMUNICATION TECHNICIANS CERTS.
- * C. & G. ELECTRONIC SERVICING
- * R.T.E.B. RADIO AND TV SERVICING CERTIFICATE
- * RADIO AMATEURS EXAMINATION
- * P.M.G. CERTIFICATES IN RADIO TELEGRAPHY

Examination Students Coached until Successful.

NEW SELF-BUILD RADIO COURSES

Build your own 5-valve receiver, transistor portable, signal generator, multi-test meter and professional-type valve voltmeter—all under expert guidance.

POST THIS COUPON TODAY and find out how ICS can help YOU in your career. Full details of ICS courses in Radio, Television and Electronics will be sent to you by return mail.

MEMBER OF ASSOC. OF BRITISH CORRESPONDENCE COLLEGES.

INTERNATIONAL CORRESPONDENCE SCHOOLS

Dept. 248, Intertext House, Stewarts Road, London, S.W.8.

NAME ....
Block Capitals Please
ADDRESS ....
.... 8.69

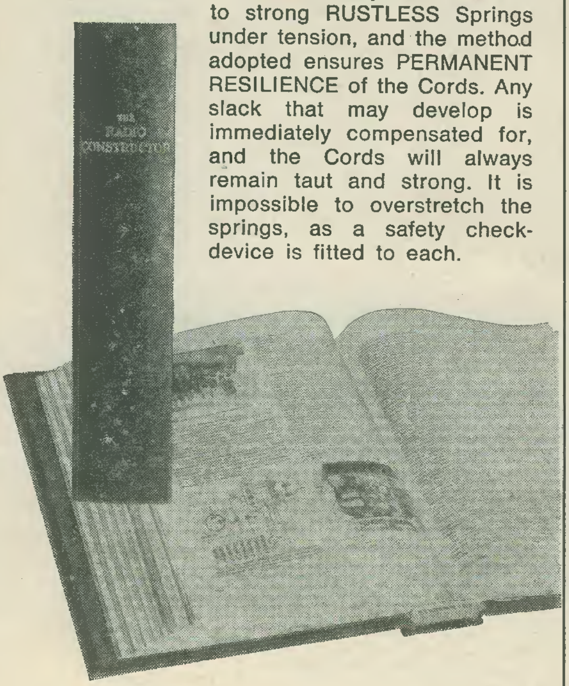
THE RADIO CONSTRUCTOR

SMALL ADVERTISEMENTS

Continued from page 59

PERFECT 30 WATT HI-FI AMPLIFIER for guitar, etc., £8. 13 watt amplifier £3. 2½in. oscilloscope £10; similar ex-government £4. — 4 Riversley Road, Gloucester.

FOR SALE: 77 copies *The Radio Constructor*, 1954-1963, complete volumes 8, 9, & 11. 17 copies *Practical Wireless*, 1962-1963. Offers? D. J. Norris, 7 Sawtry Close, Carshalton, Surrey.

BOOKS FOR SALE: *Radio Astronomy*, Bernard Lovell & J. Clegg 12/6d. *Earth's Envelope*, Theo Lobsack 10/-, *Space Research & Exploration*, D. R. Bates 15/-, *Practical Yacht Racing*, Schiottz 15/-, *Yacht Racing*, Sturgess £1, *Faster Sailing*, Bavier 10/-, *The Story of Atomic Energy*, Soddy 7/6d., *Radioisotope Laboratory Techniques*, Faires 7/6d., *Atomic Medicine*, Behrens 15/-, *Medical Radiation Biology*, Ellinger £1, *Sunday Times & Life World Library Volumes: Brazil, S.E. Asia, Israel, Italy, Russia, Mexico, Greece, Africa, Germany, France, India, Britain, Japan, Scandinavia*, 12/6d. each, *Life Science Library: Wheels, Mathematics, Man & Space, Planets, Energy*, 12/6d. each, *The Colour of Canada*, £1, *Science Survey 3*, Vista Books £1, *Science Today & Tomorrow* 10/-. Box No. F364.

WORLD DX CLUB covers all aspects of SWLing on Amateur and Broadcast Bands through its monthly bulletin *"Contact"*. Membership costs 25s. a year. Enquiries to Secretary, WDXC, 17 Taunton Road, Bridgwater, Somerset.

WANTED. Glass paperweights. Please send details and price to Box No. F365.

POSTAL ADVERTISING? This is the Holborn Service. Mailing lists, addressing, enclosing, wrappering, facsimile letters, automatic typing, copy service, campaign planning, design and artwork, printing and stationery. Please ask for price list.—The Holborn Direct Mail Company, Capacity House, 2–6 Rothsay Street, Tower Bridge Road, London, S.E.1. Telephone: 01–407–1495.

CLEARING LABORATORY. Oscilloscopes, VTVM's, VOM's H.S. recorders, transcription turntables, electronic testmeters, calibrators, p.s.u.'s, pulse generators, d.c. null-potentiometers, bridges, spectrum analysers, voltage regulators, sig-gens, CCTV monitors, M/C relays, components, etc. Telephone: Lower Beeding 236.

FOR SALE: "Premier" Cine Film storage cases, grey hammer enamel finish, carrying handle, lock. Size 12in. x 7½in. x 7½in. to take 10 400ft. reels and cans at £1. Size 11in. x 6in. x 6in. to take 11 200ft. reels and cans at 15/-. Box No. F375.

FOR SALE: Radio Control model M.T.B. Aerokit Patrol Torpedo Boat, 40in. x 11in. Good detail. Taplin Twin engine. Twin rudders. Steering and speed control on throttle fitted. Raven Flight Electronics new R/C equipment, needs installing. £50 o.n.o. Box No. F372.

FOR SALE: 110 used valves. 4–9 pins. £7 o.n.o. Telephone: 01–467–5091.

INNOVATION IN DX CLUBS ANNOUNCED! Formed in October, 1965, the Radio New York Worldwide Listeners Club now has 3,600 members in 86 countries! A unique club offering shortwave listeners monthly magazines containing listening tips and technical features, numbered wallet-sized membership cards and gold 8½in. by 11in. membership certificates. Multilingual report forms available for cost of postage. "We must be doing something right!" Find out . . . join now!" Send 7s. 2d. (crossed domestic money order) for one year's membership to: The Radio New York Worldwide Listeners Club, 485 Madison Avenue, New York 10022, U.S.A.

continued on page 62

PLAIN-BACKED NEW STYLE SELF-BINDERS

for your other magazines

(max. format 7½" x 9½")

The "CORDEX" Patent Self-Binding Case will keep your copies in mint condition. Issues can be inserted or removed with the greatest of ease. Specially constructed Binding cords are made from Super Linen of great strength, very hard twisted and twice doubled. They are attached to strong RUSTLESS Springs under tension, and the method adopted ensures PERMANENT RESILIENCE of the Cords. Any slack that may develop is immediately compensated for, and the Cords will always remain taut and strong. It is impossible to overstretch the springs, as a safety check-device is fitted to each.

COLOURS: MAROON OR GREEN

(Please state choice)

PRICE 13/6 **Postage 1/6**

Available only from:–

Data Publications Ltd.
57 Maida Vale London W9

SMALL ADVERTISEMENTS

Continued from page 61

GREEN ELECTRONICS FOR COILS & TRANSFORMERS wound to your specification, assembly and wiring of circuits. S.A.E. for details. "Templecombe", Cleveland Road, Worcester Park, Surrey.

MAGAZINES FOR SALE: *Wireless World* July to September 1965 inc., March, July and September 1966, 1967–January & February, May, June, August and September. *Radio Constructor* January 1966 to March 1968 inclusive. *Practical Wireless* 1964 February to April inc., June, 1965–March to September inc. plus November & December; 1966–January to April inc. *Practical Television* 1965–January, April, July & August; 1966–January to July inc., plus September & October. *Short Wave Magazine* 1965–March, July, September to December inc.; 1966–January to November inc. *R.S.G.B. Bulletin* 1965–January, March, June, August, September, November & December; 1966–January to September inc., plus November. *Hi-Fi News* 1965–May, August to October inc., November & December; 1966–January to October inc. *Amateur Tape Recording* 1965–May, August, September, October & December; 1966–January to April inc., June to August inc.; 1967–April, May, June to September inc. What offers? Will sell in lots or separately. Can be collected in London. Box No. F370.

ESSEX GARDENERS. Buy your bedding and rock plants, shrubs, etc., also cacti from May's Nurseries, 608 Rayleigh Road, Hutton, Brentwood, Essex. Callers only. Monday to Saturday.

FOR SALE: Disposing of small collection of 78 r.p.m. records. Classical, semi-classical and light music (some musicals). Many collector's items. S.A.E. for list. Box No. F369.

FOR SALE: Two re-entrant type loudspeakers, fitted back to back on common base. Suitable public address or pop group. Powerful. 15 ohm input. Spare diaphragms. £5. Box No. F373.

FOR SALE: *The Radio Constructor*, Volume 15 bound, Volumes 16 and 17 unbound. Postage 7/6d. Offers to Box No. F374.

FOR SALE: H.T./L.T. Transformer. Outputs up to 1050V, O.5A. Ex-computer, excellent condition. £6 o.n.o. Box No. F376.

FOR SALE: Revspeed revolution counter £3. Box No. F378.

FOR SALE: Metal Rectifier, Radiospares Type REC22, 30/-. Push-pull Interstage transformer, Repanco Type TT4, 7/6d. Pair Mullard OC36 transistors, unused, 35/-. Heat sink to match, 10/-. 0-200mA meter, 2½in. diam., flush mounting, 10/-. 0-40mA meter, 2in. sq. f.m., 15/-. 50 assorted resistors, £1. 25 assorted capacitors, £1. Box No. F379.

FOR SALE: Four Mullard RG1–240A rectifier valves, with high voltage insulation filament transformer, suitable use in pairs. £5. Box No. G100.

FOR SALE: 813 valve and socket. 50/-. Box No. G101.

ASSORTED LOTS OF USED COMPONENTS. Resistors 15/- for 50. Capacitors 10/- for 20. Box No. G102.

PROPERTIES for sale and to let in London and suburbs. Apply to Maggs & Stephens, Estate Agents, 229 Maida Vale, London, W.9. MAIda Vale 8123.

2.5kV SOLID STATE POWER SUPPLY for sale. As per description in *The Radio Constructor*, August 1966 issue. In cabinet 8in. wide x 11in. deep x 9½in. high. Matsunaga Variac and 0-3000V d.c. meter. £25 o.n.o. Box No. G103.

TOROIDS FOR SALE: 550, 475, 500, 395, 480, 210, 185, 110, 92mH. 5/- each. Box No. G104.

CHASSIS
and
CASES by

Smith's of EDGWARE ROAD

H. L. SMITH & CO. LTD.
287/9 Edgware Road
London W2
TEL: 01-723 5891

CASES ALUMINIUM, SILVER HAMMERED FINISH

Type	Size	Price	Type	Size	Price
N	8x6x2"*	18/-	W	12x7x7"	37/6
N	6x6x3"	17/6	W	15x9x8"	48/6
N	4x4x2"	11/-	Y	8x6x6"	29/-
U	4x4x4"	11/-	Y	12x7x7"	45/-
U	5½x4½x4½"	17/-	Y	13x7x9"	50/6
U	8x6x6"	23/-	Y	15x9x7"	53/6
U	9¼x7½x3½"	24/-	Z	17x10x9"	72/6
U	15x9x9"	49/-	Z	19x10x8½"	78/-
W	8x6x6"	23/-			*Height

Type N has removable bottom, Type U removable bottom or back, Type W removable front, Type Y all screwed construction, Type Z removable back and front. Plus p. & p.

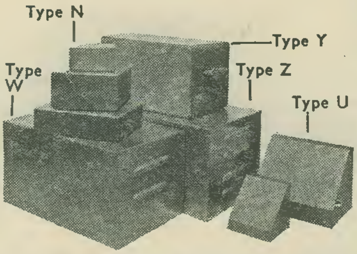

BLANK CHASSIS

FOUR-SIDED 16 SWG ALUMINIUM

Size	Price	Base	Size	Price	Base
6x4x2"	6/3	2/11	10x8x2½"	12/-	5/6
7x4x1½"	6/-	3/2	12x7x2½"	12/-	5/11
7x5x2"	7/6	3/5	12x9x2½"	13/9	7/-
8x4x2"	7/-	3/4	13x8x2½"	13/9	6/11
8½x5½x2"	8/-	3/9	14x7x3"	14/6	6/6
9x7x2"	9/3	4/10	14x10x2½"	16/-	8/7
10x4x2½"	9/-	3/9	15x10x2½"	16/6	9/1
12x4x2½"	10/-	4/3	17x10x3"	19/6	10/1
12x5x3"	12/-	4/9			

TO FIT OUR CASES

Size	Price	Base	Size	Price	Base
7x5¾x1½"	7/-	3/9	12x6¾x2"	10/9	5/11
7x5¾x2"	7/9	3/9	14x8¾x2"	13/6	7/11
11x6¾x1½"	10/-	5/6	15¾x9¾x2½"	17/-	9/6
11x6¾x2"	10/-	5/6	17¾x9¾x2½"	18/6	10/6

Plus post & packing

PANELS: Any size up to 3ft. at 6/- sq.ft. 16 s.w.g. (18 s.w.g. 5/3). *Plus postage and packing.*

YUKAN SELF-SPRAY *SO PROFESSIONAL THE YUKAN AEROSOL WAY–*

Get these NOW! *air drying* ***GREY HAMMER OR BLACK WRINKLE (CRACKLE)*** *finishes*

Yukan Aerosol spraykit contains 16 ozs. fine quality, durable easy instant spray. No stove baking required. Hammers available in grey, blue, gold, bronze. Modern Eggshell Black Wrinkle (Crackle) all at 15/11 at our counter or 16/11, carriage paid, per push-button self-spray can. Also Durable, heat and water resistant Black Matt finish (12 ozs. self-spray cans only) 13/11 carriage paid.
SPECIAL OFFER: I can plus optional transferable snap-on trigger handle (value 5/-) for 18/11, carriage paid. Choice of 13 self-spray plain colours and primer (Motor car quality) also available.

Other Yukan Air Drying Aerosols, 16 ozs. at 16/11 carr. paid include:
Zinc Chromate
Clear Lacquer
Metallics: Grey, Blue, Bronze and Gold.

Please enclose cheque or crossed P.O. for total amount direct to:

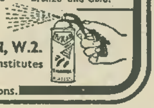

DEPT: N/4 YUKAN, 307a, EDGWARE ROAD, LONDON, W.2.
We supply many Government Departments, Municipal Authorities, Institutes and Leading Industrial Organisations—We can supply you too.
Open all day Saturday. Closed Thursday afternoons.

THE WILSIC REVERBERATION UNIT KIT

Self-contained, 6 transistor, reverberation chamber to which microphones, instruments, tuners or tape recorders may be connected for added dimensional effect. The output is suitable for most amplifiers and the unit is especially suitable for use with electronic organs. A ready-built spring and transducer assembly is used (58/11 if bought separately).
Complete, easy-to-build kit with constructional notes and circuits: £7.10.0. Pre-drilled and printed case 34/- extra. All parts available separately. Send 1/- for circuit and construction details.

THE WILSIC SIGNAL INJECTOR

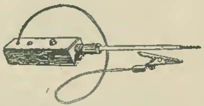

Miniature transistorised square wave signal injector, ready for use, only 19/6 including battery. P. & P. 1/6.

Send 1/- for our catalogue of components, testmeters, musical electronics & more details of the above items. Callers welcome.

WILSIC ELECTRONICS LIMITED
6 Copley Road, Doncaster, Yorkshire

SMALL ADVERTISEMENTS

Use this form for your small advertisement

To: **The Advertisement Manager, Data Publications Ltd., 57 Maida Vale, London, W.9**

Please insert the following advertisement in the ....issue of THE RADIO CONSTRUCTOR

16 words at 9d. = 12/-

ALL WORDING IN BLOCK LETTERS PLEASE

I enclose remittance of .... being payment at 9d. a word. MINIMUM 12/-
Box Number, if required, 2/- extra.

NAME..
ADDRESS..
....

Copy to be received four weeks prior to publication. Published on the 1st of every month.

Please mention **THE RADIO CONSTRUCTOR** when writing to advertisers

THE RADIO CONSTRUCTOR

Price 3/- each, postage 6d.

Annual Subscription 42/-, post free.

Bound Volumes Vol. 21. August 1967 to July 1968 **35/-**, postage **4/6.**
Vol. 22. August 1968 to July 1969 **35/-**, postage **4/6.** (Available end of August)

Cordex Self-Binders With title "The Radio Constructor" on spine,
maroon, **14/-**, postage 1/6.
With no title on spine, maroon or green. **13/6**,
postage 1/6.

DATA BOOK SERIES

DB5 **TV FAULT FINDING**
124 pages. Price **8/6**, postage 8d.

DB6 **THE RADIO AMATEUR OPERATOR'S HANDBOOK**
64 pages. Price **6/-**, postage 6d.

DB15 **TWENTY SUGGESTED CIRCUITS**
48 pages. Price **3/6**, postage 5d.

DB16 **RADIO CONTROL FOR MODELS**
192 pages. Price **15/-**, postage 1/-.

DB17 **UNDERSTANDING TELEVISION**
512 pages. Price **37/6**, postage 3/-

DB18 **AUDIO AMPLIFIERS**
128 pages. Price **10/6**, postage 8d.

PANEL-SIGNS TRANSFERS

Six sheets in each set

Set 3: **WORDING**—White

Set 4: **WORDING**—Black

Set 5: **DIALS**—Control Panels have a clear background

Set 6: **DIALS**—Control Panels have a black background

Price per set **4/6**, postage 4d.

I enclose Postal Order/Cheque for...in payment for...

NAME ....

ADDRESS ....

....

(Please use Block Capitals for both name and address)

Postal Orders should be crossed and made payable to Data Publications Ltd.
Overseas customers please pay by International Money Order
All publications are obtainable from your local bookseller

Data Publications Ltd., 57 Maida Vale, London W.9

RADIO CONSTRUCTORS DATA SHEET

29

SQUARES OF NUMBERS

The Table lists squares of numbers from 1 to 100.

Number	Square	Number	Square	Number	Square	Number	Square	Number	Square
1	1	21	441	41	1,681	61	3,721	81	6,561
2	4	22	484	42	1,764	62	3,844	82	6,724
3	9	23	529	43	1,849	63	3,969	83	6,889
4	16	24	576	44	1,936	64	4,096	84	7,056
5	25	25	625	45	2,025	65	4,225	85	7,225
6	36	26	676	46	2,116	66	4,356	86	7,396
7	49	27	729	47	2,209	67	4,489	87	7,569
8	64	28	784	48	2,304	68	4,624	88	7,744
9	81	29	841	49	2,401	69	4,761	89	7,921
10	100	30	900	50	2,500	70	4,900	90	8,100
11	121	31	961	51	2,601	71	5,041	91	8,281
12	144	32	1,024	52	2,704	72	5,184	92	8,464
13	169	33	1,089	53	2,809	73	5,329	93	8,649
14	196	34	1,156	54	2,916	74	5,476	94	8,836
15	225	35	1,225	55	3,025	75	5,625	95	9,025
16	256	36	1,296	56	3,136	76	5,776	96	9,216
17	289	37	1,369	57	3,249	77	5,929	97	9,409
18	324	38	1,444	58	3,364	78	6,084	98	9,604
19	361	39	1,521	59	3,481	79	6,241	99	9,801
20	400	40	1,600	60	3,600	80	6,400	100	10,000

ENGLANDS LEADING COMPONENT & EQUIPMENT CENTRES

SOLID STATE–HIGH FIDELITY
AUDIO EQUIPMENT

Mono or Stereo Audio, Equipment developed from Dinsdale Mk.II—each unit or system will compare favourably with other professional equipment selling at much higher prices.

COMPLETE SYSTEMS
FROM
£15.5.0

THE FINEST VALUE IN HIGH FIDELITY—
CHOOSE A SYSTEM TO SUIT YOUR
NEEDS AND SAVE POUNDS

All units available separately.

SEND FOR *FREE BROCHURE* (No. 21) *TODAY!*
DEMONSTRATIONS DAILY AT '303' EDGWARE ROAD

INTEGRATED TRANSISTOR AMPLIFIERS

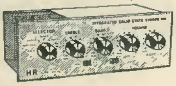

for complete listening satisfaction choose either the—

6 WATTS MONO
MA66 12 WATTS STEREO

We are pleased to offer two new designs with the choice of either mono or stereo systems. These BRITISH DESIGNED UNITS favour the user in so many ways—with fantastic power and quality with far greater adaptability, with freedom for battery or mains operation.

MA7 MONO OR STEREO **£8.10.0** POST PACKING 5/- EITHER MODEL
MA66 **£16.10.0**
OPTIONAL MAINS UNIT PS20 62/6d. pp 4/-

Illustrated leaflets 12 and 14 FREE on request

ELECTRONIC ORGANS
KITS TO BUILD YOURSELF AND COMPLETE UNITS

THE MAYFAIR *Acclaimed by everyone*

THE MAYFAIR 99 GNS.
BROCHURE 9

A completely new development in portable electronic musical instruments and a new field for the home constructor. The 'MAYFAIR' produces a multitude of the most pleasing sounds with a wide range of tone colours suitable for classic or popular music. **The organ is fully polyphonic, that is full chords can be played over the entire keyboard.** Supplied as a kit of parts which includes 165 transistors, printed circuit panels, special fully spring and depth of touch adjusted keyboard, attractive vynair covered cabinet with carry handle.

COMPLETE KIT Deposit **£29.19.0**
Deferred terms available
12 monthly payments of **£7.** Total **£113.10.0**
BUILT AND TESTED
Deposit **£36.8.0** and
12 monthly payments of **£9.** Total **£144.8.0**

A complete detailed and illustrated construction manual is provided, covered circuits and full parts list. All items may be purchased separately. All parts supplied are fully guaranteed. Full after sales service.

THE GROSVENOR

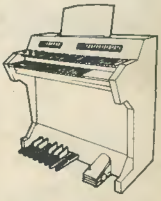

THE GROSVENOR
KITS FROM £220 terms available
BROCHURE 9B

THE GROSVENOR is designed for the more ambitious musician and has a much wider range than most commercial organs. **It comprises two four-octave (49 note) keyboards and a thirteen note pedal board.** It has four pitches (i.e. 8ft., 4ft., 2ft., 1ft.) on the upper or solo keyboard, three pitches (i.e. 16ft., 8ft., 4ft.) on the lower or accompaniment keyboard, two pitches (i.e. 16ft., 8ft.) on the pedal board. Variable sustain on the solo keyboard and variable vibrato on both keyboards. It has 15 voices in the solo tone-forming unit, 10 voices in accompaniment tone forming unit and 4 voices in the pedal tone-forming unit. **All components and kit sections are available separately including the Oak Console at £65.18.0.**
A complete detailed and illustrated construction manual is provided with circuits and full parts list. All items may be purchased separately. All parts supplied are fully guaranteed. Full after sales service and advice freely available.

Once built the 'MAYFAIR' or 'GROSVENOR' will then provide years of enjoyable entertainment. Call in–See them for yourself!

PRACTICAL ELECTRONICS—ELECTRONIC ORGAN KIT
We are able to supply Parts as described in this series. Details on request

ORGAN COMPONENTS: COMPLETE RANGE IN STOCK • 49 AND 61 NOTE KEYBOARDS • 2 TO 5 AMP GOLD CONTACTS • COILS AND CHOKES • REVEBERATION SPRINGS & UNITS • STOP TABS & ASSEMBLIES • PEDAL BOARDS • RHODIUM & GOLD CLAD WIRE, ALSO PRINTED CIRCUITS ETC. COMPLETE RANGES FOR TRANSISTORISED ORGANS. ASK FOR NEW PRICE LISTS WITH DETAILS. LEAFLET 9B. All enquiries to: ORGAN DEPT.—MR. ELVINS

DO IT YOURSELF MW/LW PORTABLE

New printed circuit design with full power output. Fully tunable on both mw/lw bands. 7 transistors plus diode, push-pull circuit. Fitted 5 inch speaker, large ferrite aerial and Mullard transistors. Easy to build with terrific results. All local and Continental stations.

TOTAL COST TO BUILD £6.19.6. P.P. 4/6
Send for Brochure 1

NEW MODELS
NOMBREX
TRANSISTORISED
Test Equipment

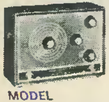

MODEL		PRICE £	s.	d.	Leaflet No.
22	Power Supply	14	0	0	22
30	Audio Generator	19	10	0	24
31	R.F. Generator	12	10	0	25
32	C.R. Bridge	10	10	0	26
33	Inductance Bridge	20	0	0	29

Send for descriptive illustrated Brochure.

QUALITY CAR RADIOS

A precision engineered car radio that's perfect company for long hours on the road. Has quick push-button operation for immediate station selection and choice of Medium or Long wave frequency. Output of 3½ watts ensures crisp, top quality sound even at high motoring speeds. Includes full accessories and instructions.

POSITIVE/NEGATIVE EARTH PRICE £12.12.0. pp. 4/6
MANUAL as above **£8.19.6.** but with single MW/LW push Button. Brochure 15

*SCOOP! **STARR RECORD PLAYER** Deck. Plays 33, 45, 78 records. 9 volt operated. With mono cartridge. Brand new. As illustrated. **59/6** post 3/6

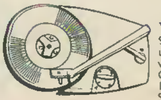

***MULLARD 1 WATT AMPLIFIER**
9 volts, 5 transistor unit complete with volume control. Output to 3 ohms. Ideal for use with Starr Record Deck.

Send for leaflet 2. **45/-** post 3/-

BUILD A QUALITY TAPE RECORDER

To get the best out of your MAGNAVOX DECK, you need a MARTIN RECORDAKIT. This comprises a special high quality 6 valve amplifier and pre-amplifier which comes to you assembled on its printed circuit board—in fact everything needed down to the last screw FOR MAKING A SUPERB TAPE RECORDER, which, when built, will compare favourably with instruments costing twice as much, yet you need no experience or technical skill to bring this about. THE INSTRUCTIONS MANUAL MAKES BUILDING EASY AND SUCCESS ASSURED

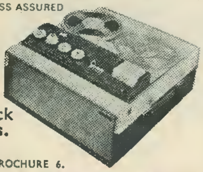

4 Track
39 gns.

P.P. 22/6
ASK FOR BROCHURE 6.

Kit comprises: Deck, Amplifier, Cabinet and speaker, with MICROPHONE 7 in 1,200 ft. tape, spare spool.
ALL UNITS AVAILABLE SEPARATELY. "Nothing more to buy." Today's Value £60.

VHF FM SUPERHET TUNER MKII

*5-MULLARD TRANSISTORS & 4 DIODES * 300 Kc/s BANDWIDTH * PRINTED CIRCUIT CONSTRUCTION * HIGH FIDELITY REPRODUCTION MONO AND STEREO

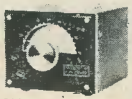

A popular VHF FM Tuner now used throughout the country for quality reception of monophonic and, with the decoder stereophonic broadcasts. There is no doubt about it—VHF FM gives the the *real sound*. Excellent stability economically priced.

PARTS TOTAL **£6.19.6** DECODER £5.19.6
(CABINET 20/– EXTRA) ASK FOR LEAFLET 3.

TRANSISTORS
MANUFACTURERS—DISTRIBUTORS

We publish a **QUANTITY, SEMI-CONDUCTOR BULLETIN** listing over 500 different devices available FROM STOCK in medium to large quantities at KEEN PRICES coupled with PROMPT DELIVERIES.
TO OBTAIN YOUR COPY, WRITE TO US (on Company Headed Notepaper please) requesting our SEMI-CONDUCTOR BULLETIN. For TELEPHONE QUOTATIONS, PHONE (01) 723 1008/9 Extn. 4 (01) 723 0401 Extn. 4.

We purchase medium to large quantities of Transistors and Devices excess to Manufacturers and Distributors requirements.
Write or phone Extn. 4

NEW—MALLORY LONG LIFE MERCURY BATTERIES 50% OFF LIST PRICES

*RM12 1.35 volts 3600 m/aH, size 2"x½" dia. **OUR PRICE 5/- each**

*RM625 10.35 volts 350 m/aH. Pack of 8. Size 2¼ x ½ dia. **OUR PRICE 10/- each**

Easily split into eight 1.35v. cells. These cells are ideal for any application where SMALL SIZE HIGH CAPACITY and LONG LIFE are required. QUANTITIES AVAILABLE

TRANSISTORS—SEMICONDUCTORS

COMPLETELY NEW 1969 LIST OF 1000 types. Send for your FREE COPY TODAY. (list 36)

S.C.R.'s from 5/-
Field Effect Transistors from 9/6
Power Transistors from 5/-
Diodes and Rectifiers from 1/6

GARRARD RECORD DECKS

BRAND NEW All below list price

	£	s.	d.
2025 Mono/Stereo GKS 25	7	19	6
3000 LM Mono/Stereo 9 TAHC	9	19	6
SP25 Mk II	11	19	6
AT60 Mk II	13	0	0
AP75	19	0	0
SL55	11	19	6
SL65	14	14	0
SL75	29	0	0
SL95	35	0	0
A70 Mk II	12	12	0
B.S.R. UA25 Mono	5	19	6
,, MA65	9	19	6
,, MA70	12	12	0
,, MA75	15	5	0
401 Garrard	28	10	0

Carriage/Packing 7/6d. all models
Complete range of accessories available
Send for New 8 page brochures 16, 17.

HI-FI equipment to suit EVERY POCKET

VISIT OUR NEW HI-FI CENTRE at 309 EDGWARE ROAD AND SAVE UP TO £25 ON SEPARATE UNITS OR THE SYSTEM OF YOUR CHOICE

for all leading makes

- **AMPLIFIERS**
- **TUNERS**
- **DECKS**
- **SPEAKERS**
- **MICROPHONES**
- **TEST EQUIPMENT**
- **HEADPHONES**
- **CARTRIDGES, etc.**

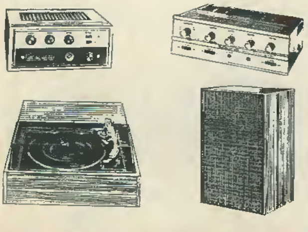

All with Terrific Savings

It will PAY YOU to pay us a VISIT!

COMPLETE SYSTEMS from £46–Saves £12.10.0!
Send for new 8-page Illustrated Hi-Fi List 16/17

Fully Illustrated CATALOGUE

COMPLETELY NEW 9th EDITION (1969)

The most COMPREHENSIVE—CONCISE—CLEAR COMPONENTS CATALOGUE

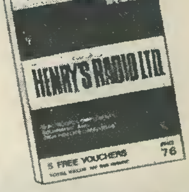

Complete with 10/- worth discount vouchers
FREE WITH EVERY COPY

* 32 pages of transistors and semi-conductor devices, valves and crystals.
* 210 pages of components and equipment.
* 70 pages of microphones, decks and Hi-Fi equipment.

6,500 ITEMS
320 BIG PAGES

Send today 7'6 Post etc 2/-

HENRY'S RADIO LTD HR

OPEN MON.–SAT. 9 a.m.–6 p.m. THURS. 9 a.m.–1 p.m.

303 Edgware Road, London, W.2. Mail Order Dept. all types of Components, Organ Dept. (01) 723-1008/9
309 Edgware Road, London, W.2. High Fidelity Sales, P.A. and Test Equipment, Record Decks (01) 723 6963