Introduction to HAM RADIO

3/6

A. G. WOOD, G5RZ

BERNARDS RADIO MANUALS ★ No. 92

INTRODUCTION
TO
HAM RADIO

by A. G. WOOD, G5RZ

L Hall
VS1JR

LONDON
BERNARDS (Publishers) LTD

BERNARDS RADIO MANUALS No. 92

General Editor: W. J. MAY

★ ★ ★ ★ ★ ★ ★ ★

FIRST PUBLISHED 1950

Printed for Bernards (Publishers) Ltd., The Grampians,
Western Gate, London, W.6, by Lake, Sison & Brown, Ltd.,
132-3, Upper Thames Street, London, E.C.4.

Foreword

This book is intended for the beginner in Ham Radio—one who has just obtained or is hoping to obtain a transmitting licence. The author has touched on most of those problems which have worried us all at one time or another and about which we are sometimes diffident to seek information for fear of appearing too ignorant in the eyes of the more experienced.

The author has endeavoured to express himself as simply as possible and has used mathematics only when absolutely necessary. Ham Radio is a fine hobby—if not the finest—and it should not be necessary for the would-be ham to have to study calculus to enjoy the fruits of his work. There are many able text-books available to those who wish to go more deeply into the subject.

It was not thought out of place to add a chapter on operating technique and a code of conduct. The ham who learns to operate his station efficiently and with a thought to the pleasure and enjoyment of tens of thousands of fellow hams will forge a bond of friendship with an ever-widening circle.

CONTENTS

Chapter One

INTRODUCTORY

In dealing with the propagation of wireless waves it is difficult to find a better analogy than the old one of the stone being dropped into the middle of a pond. The ever-widening circle of ripples gradually decreasing in amplitude will eventually agitate a cork floating on the water some distance away from the original disturbance. In like manner a sudden alteration in electrical strain along the length of a transmitting aerial will cause similar ripples of an electrical nature to be hurled into space which will induce very minute alterations in potential in a receiving aerial at a distant point. Here the analogy ends because the propagation of electromagnetic waves depends upon a vast number of factors. Broadly speaking, and dealing with the ordinary range of high frequencies about which we are concerned in this book, the transmitted signal will reach the receiver in one of two ways: the ground wave, when in most cases the range of the transmitter is limited to the power employed, and will vary considerably according to local conditions; and the reflected wave which, with an input of only a few watts, and given suitable conditions can be made to travel to diametrical points of the earth. This is brought about by the presence of an ionised layer or layers a considerable distance above the atmosphere. The reflected wave rising at an angle to the horizontal will eventually strike and be reflected from one of these layers and diverted back to the surface of the earth, at which point it will become audible in a suitably tuned receiving apparatus. It may even bounce off the earth at this point; be reflected again still further away and return to earth once more at an even more remote point. It should

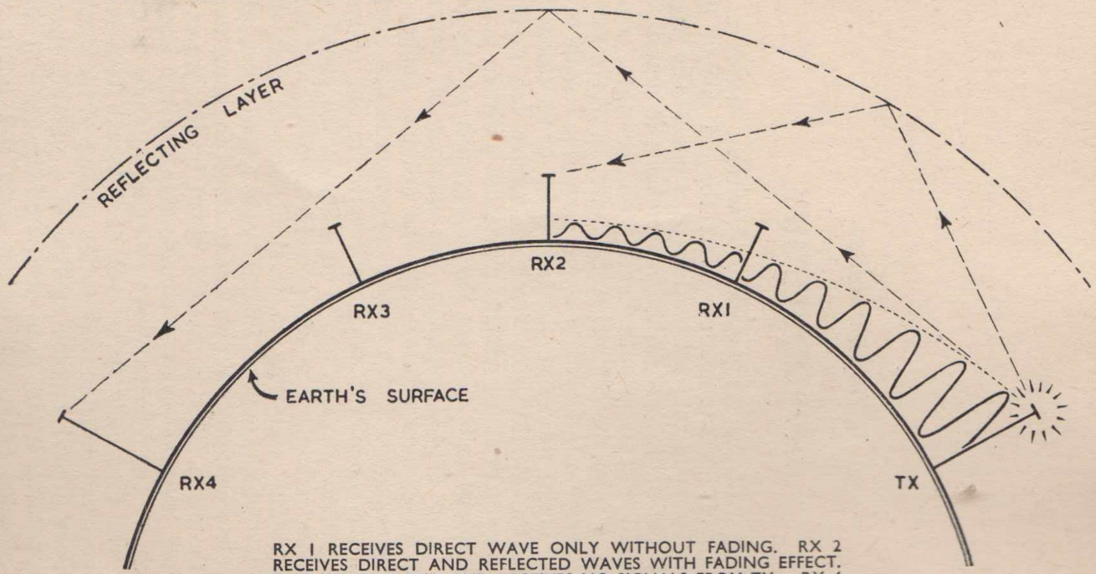

RX 1 RECEIVES DIRECT WAVE ONLY WITHOUT FADING. RX 2 RECEIVES DIRECT AND REFLECTED WAVES WITH FADING EFFECT. RX 3 IS INSIDE SKIP, AND RECEIVES NO SIGNALS FROM TX. RX 4 RECEIVES REFLECTED WAVE ONLY AT GREAT DISTANCE FROM TX. NOTE THAT THE DIRECT WAVE IS ATTENUATED AND GROWS WEAKER WITH INCREASING DISTANCE FROM TX.

Fig. 1. *Illustrating " skip " and fading. TX is the transmitter* be noted that in the absence of a ground wave or at a distance where the ground wave has already been attenuated or used up in its journey along the surface, no signals will be received except in those favoured areas where it has returned to earth. This is known as the " skip " effect and accounts for the fact that a transmitter may be heard up to a radius of, say, 100 miles (by direct wave), while between 100 miles and 1,500 miles nothing will be heard. Possibly then there may be a further gap of silence and the signal reappears at 3,000 or more miles distance. Most listeners will be conversant with the effect of fading, sometimes slow, sometimes fast. This can be caused by the fact that the receiver is taking both the direct and reflected waves simultaneously. Owing to the fact that the latter has a considerably greater distance to travel it arrives at the receiving antenna somewhat behind the ground wave—it is, in fact, out of phase, and the two waves tend to cancel out or counteract one another at the point of reception. See Fig. 1.

There are ways of causing the transmitted wave to be transmitted more strongly in one direction than in another, i.e., to alter the angle of radiation so that it stands a greater chance of favourable reflection to give results at the greatest distance. Different types of aerials will have different radiation patterns, at the higher frequencies rotating beams can be employed which will cause the maximum amount of energy to be transmitted in any given direction at the will of the operator. It is not proposed to go deeply into this aspect in the present book as a beginner is far more likely to be interested in getting any results and will not worry about directional arrays until at a later stage in his development.

Let us then turn to the wavebands available for the beginner and the results that may be reasonably expected from them. Neglecting the very high and ultra-high frequencies that are available, because of the specialised equipment required for operating at those frequencies, there are five main bands to be considered.

The " top band," or 1·75 megacycle band, is limited to an input of ten watts for all. The day-time range is somewhat limited and the " service area " might be described as a radius of about fifty miles. At night this range is considerably extended, but reliable communication is not usually reckoned with beyond 100-150 miles. Moreover, at this low frequency, efficient radiators have to be well in the clear and of considerable length, and for this reason alone, perhaps, the band is not so thickly populated as are the higher frequencies.

The 3·5 mc. band is mostly used for communication throughout Great Britain and the nearer parts of the Continent during daylight and is extended to cover most of Western Europe and Scandinavia at night. Numerous amateurs have achieved great success with Transatlantic and even Australasian contacts at night; but generally speaking these greater distances are only possible with somewhat greater power than we are considering, and then only in the small hours when few are using the band. The maximum power allowed on this and the subsequent bands is limited to 150 watts for a fully licenced amateur and 25 watts to the beginner; but in point of fact except under extreme conditions the smaller power is more than ample for very satisfactory work at this frequency. In a recent low power contest held on this band when inputs were limited to 5 watts, many amateurs found that, somewhat to their surprise, reports they received varied very little from those obtained under conditions of higher input. In fact, it is surprising how great a distance can be covered with powers even as low as 1 watt.

Next we have the 7 mc. band. This is a strange mixture and is characterised by the intense interference to be expected from commercial and broadcast services. It is a " free for all " band and is either a firm favourite amongst amateurs or else studiously avoided. Nevertheless, interference permitting, daylight yields similar results to the night range on 3·5 mcs., while the night range is extended well into the DX zone and will permit of very satisfactory trans-Continental contacts.

The fourth band is the 14 mcs. It suffers from a temperament but will generally enable trans-Continental contacts to be effected during day and night. Under the best conditions —during night-time—local and near-local stations fade out owing to the " skip " effect mentioned previously, while the more distant stations increase considerably in strength. It is therefore one of the ideal frequencies for DX operating. Maximum power is as before (both grades of licence) and the whole world can be covered with the 25-watt limit under suitable conditions.

Finally, we have the 28 mc. band. This is a problem child. There are days on end when nothing can be heard. Suddenly within half-an-hour the band will be filled with stations from all parts of the world roaring in at maximum strength, only to fade away later on just as quickly. Even when the band appears to be " dead " a CQ call will often produce an unexpected response from the queerest of places. The same power considerations apply; but, frequently, exactly the same results can be achieved with only a fraction of the maximum permitted.

These, then, are the five main bands at the disposal of the newcomer. It will be seen that they are in harmonic relationship with one another and reference to Fig. 2 will illustrate this point more clearly. This factor is made use of to a very great extent in amateur practice, as will be seen later; but it would, perhaps, be helpful to explain this matter of harmonics as it is of very great importance.

As is well known an aerial system in order to radiate has to be excited by the application of an alternating current of a very high frequency. In the case of our long-wave broadcast station on 1,500 metres the frequency chosen is 200,000 cycles every second, whilst in the band of frequencies we are considering the range is between 1,600,000 and 30,000,000 cycles per second, all of which, of course, are well beyond the range of audio frequencies. Therefore, in precisely the same manner as a violin string can be made to resonate at a certain frequency to emit an audible note, so can a radiating system be made to resonate at a much higher frequency to emit electro-magnetic or wireless waves. The same way that the violin string can produce overtones or harmonics so can a transmitter radiate overtones or harmonics—that is to say, signals of a frequency bearing a direct relationship to the fundamental or basic frequency, thus two, three, four times and so on. While this fact can be of considerable service to us in designing and operating radio transmitters, it can also be a menace if suitable care is not taken to prevent the radiation of an unwanted harmonic. It may so happen that the unwanted harmonic may coincide with the frequency chosen by another transmitter, or by a television service, in which

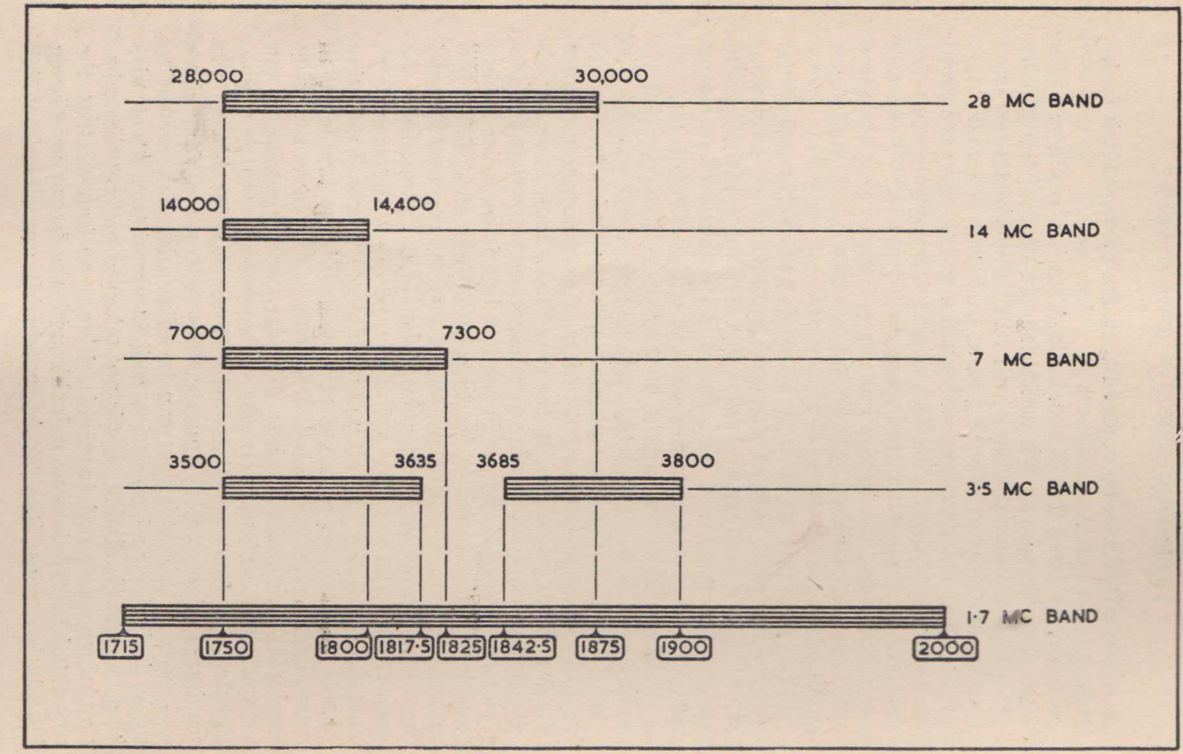

Fig. 2. Illustrating the harmonic relationship between the amateur bands.

case considerable and widespread interference will be caused. It is the duty of every transmitting amateur to be absolutely certain that the frequency he is operating on is known to him at all times and is within the band prescribed by the terms of his licence and, further, that he is not radiating unsuspected harmonics.

At a later stage it will be shown how preventive steps can be taken. Enough has been said on the general principles and theory covering wave propagation, and attention can be turned to the means of producing these high frequency alternating currents.

Chapter Two

OSCILLATORS

An oscillator is a means of generating these currents and is an absolute essential with every transmitter. There are no truly mechanical means of producing alternations of the frequencies under consideration, but fortunately the development of the thermionic valve has given us the means of doing this. The simplest form (but by no means the most satisfactory) is to tune the grid and anode circuits of an ordinary triode valve to approximately the same frequency. The interelectrode capacity of the valve itself will provide sufficient coupling between the two circuits and with application of a high tension supply to the anode and some means of heating the cathode, the valve will oscillate or generate these h.f. alternations. This type of oscillator is known as the Tuned Plate Tuned Grid or T.P.T.G. type and in modern practice is not so widely used as it is somewhat unstable and, moreover, the frequency produced is dependent to some extent upon changes in the valve capacities which will vary according to temperature. It must be the aim of every transmitting amateur to make absolutely certain that the frequency chosen to operate on remains quite constant when on the air.

Failure to do this will mean that his signal will creep or drift across the band with resultant interference with neighbouring stations and almost certainly a lost contact with the receiving station who will be unable to follow a steady change in frequency. With the exception of a much modified version of this type of oscillator, it is not proposed to deal closely with this type of circuit. At the same time it will be realised that an oscillator whose frequency is controlled by any form of tuning mechanism is capable of being pre-set to any desired frequency. Thus it can be placed at a spot free from interference and will provide the operator with a better chance of achieving contacts in a crowded band. Any oscillator where the frequency can be varied in this manner is known as the Variable Frequency Oscillator or V.F.O. in this country, and as a Signal Shifter in the United States and certain other countries.

It cannot be too strongly emphasised that whilst the V.F.O. in capable hands can improve operating efficiency and actually reduce interference, it can, in inexperienced hands, be the worst possible menace and can easily cause the operator to lose his licence by operating outside his allotted band. In considering the application, therefore, of the various types of V.F.O. described in the following pages, this all-important point must be constantly borne in mind.

Some years ago it was discovered that the crystal quartz had the peculiar property of changing its physical dimensions to a minute extent but at a very high frequency, when subjected to electrical stress. Further, that the frequency of this vibration was dependent upon the thickness of the crystal, and that over very wide variations in temperature the frequency remained constant or almost constant. This very soon led to the development of the Crystal Oscillator, the basic circuit of which is shown in Fig. 3. Unfortunately, the higher the frequency the thinner the crystal with the increased risk of fracture, so that means were developed of generating the initial frequency comparable with a satisfactory crystal thickness and then developing and amplifying a suitable harmonic to correspond with a frequency in the desired operational band. One great advantage of the harmonic relationship basis referred to earlier may now be seen. By its use a crystal with a fundamental frequency of, say, 3,500 kcs. may be chosen. The output from this can either be amplified sufficiently to radiate signals at the fundamental (in this case, 3,500 kcs.) or any one of the harmonics on 7,000 kcs., 14,000 kcs. or 28,000 kcs. can be selected and used to drive a transmitter operating on these bands.

Fig. 4 illustrates a basic means of achieving this object, this circuit being known as the Tri-tet oscillator. The grid, together with its associated coupling circuit and crystal, will

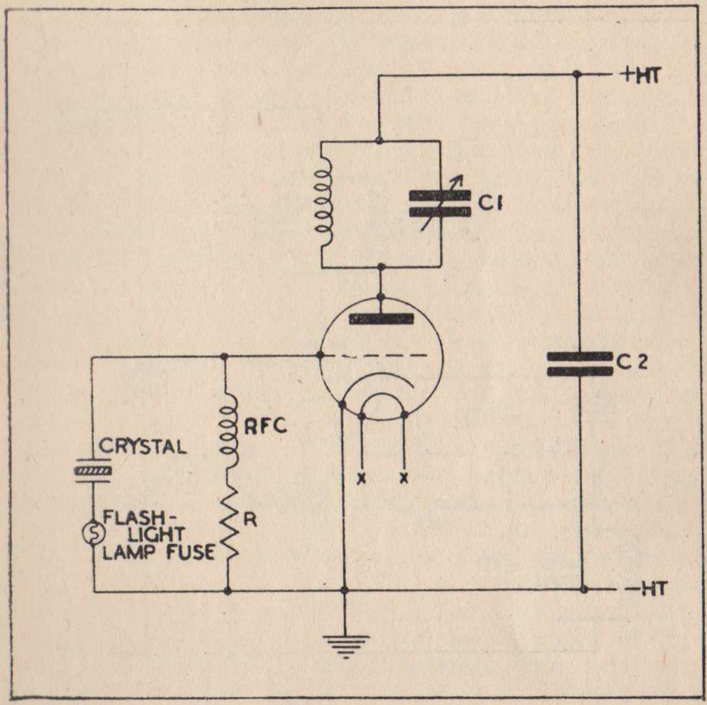

Fig. 3. *The Basic Crystal Oscillator Circuit.*

CIRCUIT CONSTANTS

R ; 2,200 to 10,000 ohms for high mu valves. 10,000 to 27,000 ohms for medium or low mu valves. C1 ; 100 to 150 pFd variable condenser. C2 ; ·001 mfd fixed condenser. Anode coil to suit the crystal frequency, being tuned by C1 to the resonant frequency. The fuse is to protect the crystal from fracture should excessive current flow in this circuit. It will quite frequently glow when the set is in an oscillating condition but should not be allowed to burn brightly.

oscillate at the fundamental frequency of the crystal and this frequency will be to all intents and purposes entirely independent of any variations in valve capacities or external variations in the circuits. The circuit in the anode of this valve is tuned to exactly twice the crystal frequency and the

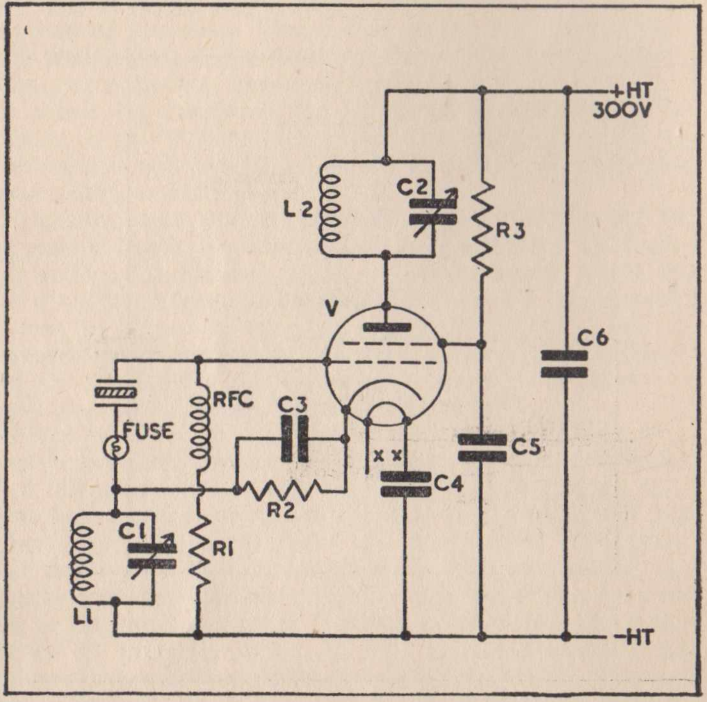

Fig. 4. *The Tri-tet Circuit.*

CIRCUIT CONSTANTS

V ;	Mullard QQVO4-7
C1 ; C2 ;	200 pFd variable condensers
C3 ; C4 ;	C5 ; C6 ; ·01 mfd
R1 ;	47,000 ohms
R2 ;	1,200 ohms
R3 ;	22,000 ohms

COIL DATA :

1½" dia. formers.

L1 ;	3·5 mcs.	25 turns
L2 ;	3·5 mcs.	25 ,,
	7·0 mcs.	12 ,,
	14·0 mcs.	12 ,,

harmonic so produced is amplified if necessary and fed to the next stage.

The chief advantages of crystal control are the assurance that one really is operating within the permitted band; knowledge of one's exact frequency; freedom from drift or creep and the greater ease with which it is possible to secure a decent note; and, finally, the relative simplicity of circuit design and construction. The great disadvantage is the inability to change frequency should it be found that signals are superimposed on those of another station; and also the modern tendency for stations calling CQ to listen only within a few kcs. of their own frequency for replies. Thus should you happen to be some distance removed from the station with whom you wish to communicate, it is improbable that he will hear your reply and will come back to some other station calling him close to his own frequency. These disadvantages can be overcome to a great extent by making use of a battery of crystals all of different frequencies and wired to a multipole switch so that any one can be brought into operation at will at the touch of a switch. This, however, adds to the cost of the equipment, and even then is not a complete answer to the problem. A compromise is to select two crystals having frequencies corresponding to the extreme limits of frequency within which it is proposed to work and to make provision for a V.F.O. drive in addition. Thus for normal working either one of the crystals can be brought into use and a change over to V.F.O. made should the distant station ask you to QSY or change frequency, to avoid interference. There is also the safeguard of these two " marker beacons " clearly indicating, when using your receiver as a monitor, the limits of frequency between which you must keep.

Let us now consider the choice of a suitable V.F.O., bearing in mind the ideal requirements — extreme stability — reasonable output—good keying characteristics—simplicity.

The Franklin or Relaxation type of oscillator has attained considerable popularity in this country and is noted for its very stable characteristics and good keying qualities. It makes use of two triodes, one of which acts as a high gain feedback amplifier which is very loosely coupled to the single tuned circuits by means of two condensers of very small capacity. This coupling is so weak that the valve circuit has little if any effect upon the frequency control tuned circuit, hence good stability is achieved. In place of two separate triodes a single valve of the double triode type can be substituted as shown in Fig. 5. This oscillator has two defects. The first is that output from it when run under ideal conditions is very small and substantial amplification is required to produce sufficient drive for the power amplifier. The second is that when an attempt is made to utilise

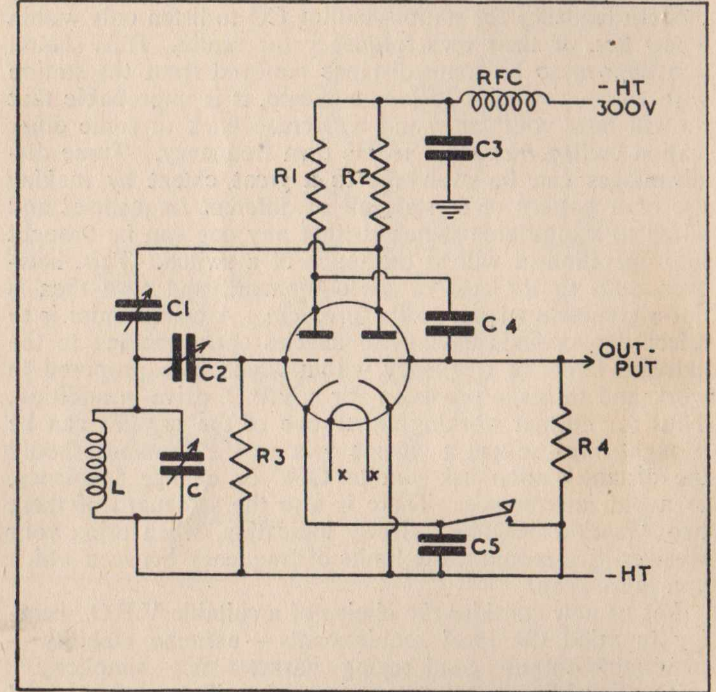

Fig. 5. The Franklin Oscillator.

CIRCUIT CONSTANTS

C1 and C2 ; small neutralising variables about 4 pFd each. C3 and C5 ; ·01 mfd C4 ; ·0001 mfd R1 and R2 ; 27,000 ohms. R3 and R4 ; 100,000 ohms. Valve ; Mullard ECC32. L/C to suit frequency.

it at the higher frequencies it develops a tendency to "squeg" or to oscillate at audio frequencies, a tendency which can be minimised by making the tuning capacity large in relation to the inductance. However, carefully designed and operated within its limits it makes a very fine oscillator.

Another type which has world-wide popularity is the E.C.O. or electron-coupled oscillator. In this circuit a tetrode valve is so employed that the screen grid is used as an anode in conjunction with the grid and cathode in an ordinary triode oscillator circuit, the screen being by-passed to earth for radio frequency by a suitable capacity in order that it may act

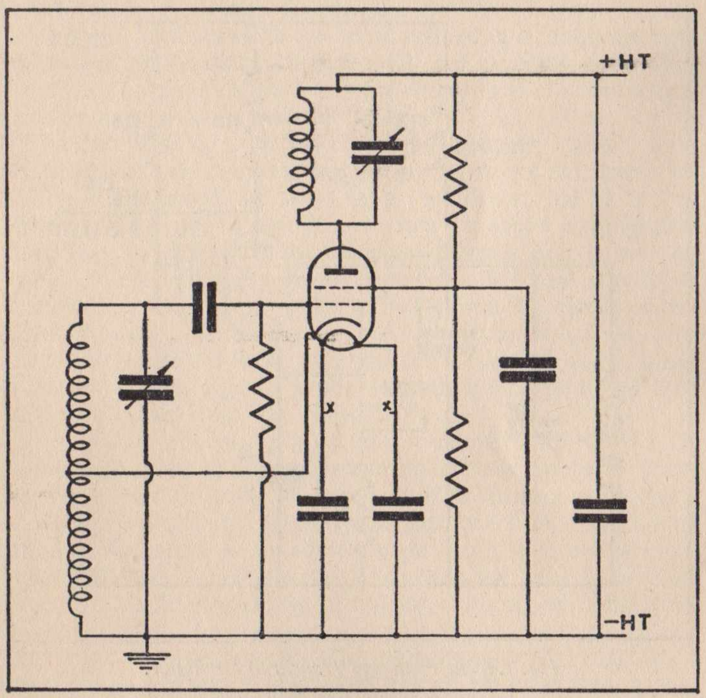

Fig. 6. *The Basic Electron-coupled Oscillator or E.C.O.*

N.B. The filament leads should be by-passed to earth and the voltage regulation on the screen should be good.

as a shield between the oscillating circuit and the actual anode of the valve. A further tuned circuit is incorporated in the anode circuit from which the output is taken and this may be tuned either to the fundamental frequency or to a harmonic. Fig. 6 illustrates the basic circuit of the E.C.O. Properly handled this circuit can be very effective; but, judging from some of the notes heard on the air emanating from stations employing these oscillators, they are not so straightforward as might at first appear.

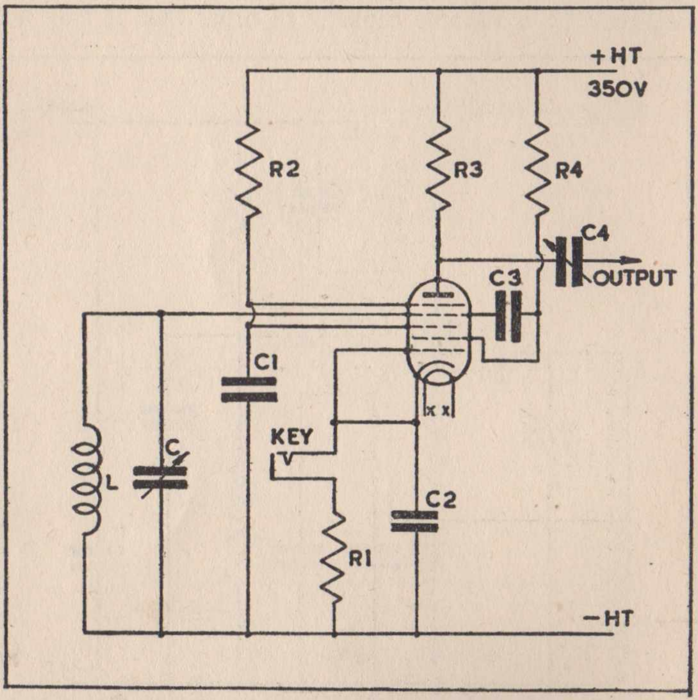

Fig. 7. The Pentagrid Transitron Oscillator.

CIRCUIT CONSTANTS

R1 ; 470 ohms. R2 ; 100,000 ohms. R3 ; 10,000 ohms. R4 ; 47,000 ohms. C1 ; C2 ; ·01 mfd C3 ; ·002 mfd C4 ; 100 pFd variable. Valve 6A8. L/C combination according to frequency.

A type developed and used extensively by the author with considerable success is the Pentagrid Transitron oscillator, which is one form of negative resistance oscillator. A pentode valve is used in the simple Transitron and a pentagrid in the type illustrated in Fig. 7. If the suppressor grid of a pentode is made negative in respect to the cathode it will return electrons to the screen which would otherwise have passed through the suppressor to the anode. This increases the screen current and produces negative resistance between the screen and suppressor grids to an extent which will permit the tuned circuit to oscillate readily up to relatively high frequencies of the order of 15 mcs. It also has excellent keying characteristics and appears to be not at all critical in its requirements as regards components. In fact, with one possible exception, the author considers it the best of a wide range of types which have been tried from time to time.

The exception is a circuit which has recently gained wide popularity in this country, largely owing to its extreme simplicity. It is known as the Clapp oscillator, but it is believed that the circuit has been known for some considerable time. Fig. 8 shows the basic circuit from which it will be seen it is built round a single triode, the internal capacities of which are isolated from the tuned circuit by virtue of the capacity bridge. It is very stable; very economical in consumption; simple to build and operate; keys well and is quite indifferent to the type of triode utilised. It will be noted that output is taken from the cathode.

It should be borne in mind that whatever form of V.F.O. is decided upon, basic design considerations apply to them all. They have to fulfil the function of producing oscillations of the highest possible stability, so that every care should be taken in designing to avoid vibration and the effect of local heating on any tuned circuit. This calls for very rigid construction: thick connecting wires for the coil or coils; firm suspension for any components and the avoidance of any long leads to avoid mechanical vibration; careful placing of the valve in relation to the tuned circuit to avoid heat transference; careful screening of the entire circuit from any outside effect; and adequate ventilation around the valve to allow the heat to dissipate readily.

The question of screening is very important. Operating in very close proximity to the V.F.O. may well be a high power r.f. amplifier working up to 150 watts input. The field from such an amplifier is quite considerable apart from any possible radiation from aerial lead-in. Unless the V.F.O. is adequately screened both as regards the circuit itself and its supply leads, there are considerable chances of a phenomenon known as radio frequency feedback taking place and should this occur it is impossible to achieve a nice, clean, chirp-free note.

All V.F.O.s and most crystal oscillators require at least one isolating or buffer stage between the oscillator and the final amplifier and it is good practice to build the V.F.O. with its associated buffer or buffers, together with its own power supply into a self-contained metal cabinet with screened input

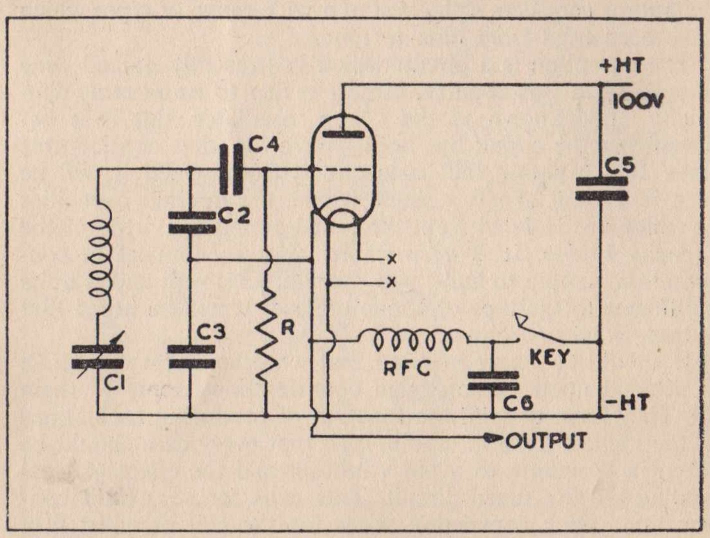

Fig. 8. *The Clapp Oscillator.*

CIRCUIT CONSTANTS

C1 ; 150 pFd variable. C2 ; C3 ; ·001 mfd C4 ; 100 pFd. C5 and C6 ; ·01 mfd R ; 100,000 ohms. Valve ; any triode. The fixed condensers C2, C3 and C4 should be of good quality mica construction, otherwise frequency drift may be experienced.

cables from the main supply and co-axial output to the following stage. A good slow motion tuning condenser with a large scale should be a feature of the design and the completed product can then be placed together with the receiver in a convenient position for operating, where changes of frequency can be controlled without effort.

One other point of importance. The average amateur delights in spending a considerable part of his existence in building or rebuilding different parts of his equipment. No matter what eventual design is decided upon, a well designed and carefully built self-contained V.F.O. can become a permanent piece of the station's equipment, and, if it is carefully calibrated, the operator will always be in a position to place his transmitter on the air exactly where he wants it to be and with the minimum of time wasted. Of course, in designing the V.F.O. the frequency range selected should be the lowest upon which it is intended to operate.

Having regard to the special conditions for top band working, and the consequent relatively infrequent use one will make of that band, the author prefers to use 3·5 mcs. as the basic frequency for his V.F.O. from which it is a simple matter to double into the 7 mc. band or quadruple into the 14 mc. band. For maximum stability it is usually recommended that the oscillator works on at least one frequency range lower than the actual transmitted frequency and this is correct: but, provided care is taken in the V.F.O. design as already indicated and remembering that higher powers are not likely to be employed on 3·5 mcs., the author considers this frequency to be the ideal one to select for the V.F.O. operation.

Chapter Three

BUFFERS AND FREQUENCY DOUBLERS

It is now time to consider the question and function of a buffer amplifier or frequency doubling valve and, to understand the importance of correct adjustment and operation, a certain amount of theory is necessary. Dealing first with the buffer, as its name implies it buffers or isolates the oscillator from the subsequent stages in the transmitter. It is safe to say that every V.F.O. and some crystal oscillator circuits will give greater satisfaction if at least one, and preferably two, buffer stages are incorporated, because it is vitally important that alterations in tuning or load in the subsequent stages are in no circumstances reflected back into the oscillator circuit, if a perfectly stable and steady note is required. The output from the average V.F.O. is small and is derived from a high resistance source. Consequently any load placed on this output will immediately cause a substantial voltage drop with a corresponding reduction in drive and an alteration in the frequency generated. Consider the characteristic static curve of a simple triode as shown in Fig. 9 which illustrates the relationship between anode current and grid voltage. In the illustration chosen it will be seen that the anode current varies from nil at -8 volts grid bias to 15 m/A. at 0 volts grid bias; and since most valves start passing grid current only when the grid bias swings over into the positive side, it follows that an alternating current of 4 volts peak applied to the grid will not require power to be supplied from the drive, since no current will flow during any part of the cycle. This curve, however, is not linear over the whole of its length which means that the response during one half cycle of the applied drive will be different from the other half, and unwanted distortion will be present in the amplified voltage appearing at the anode. To overcome this only

Fig. 9. Plate current/grid voltage characteristics of typical triode, showing application of grid drive for Class A operation.

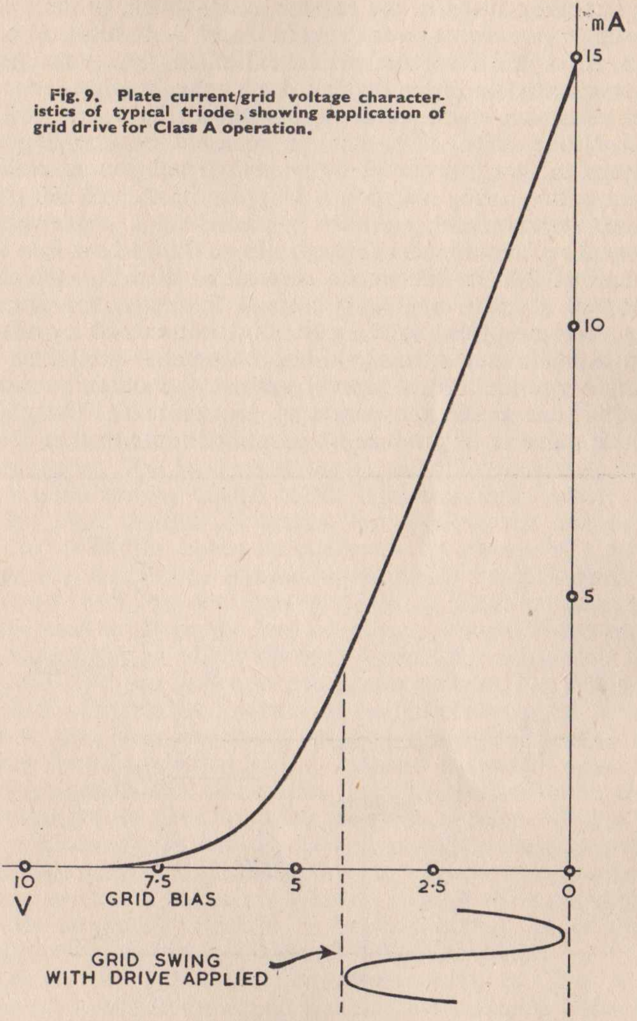

the straight portion of the curve is used, which, in the example under consideration is between 0 and – 4 volts grid bias; thus the applied voltage must be limited to 2 volts peak. Consequently, in order that no drain may be placed on the high resistance source of drive, first the buffer valve must be biased to 2 volts. This can be achieved by applying this voltage to the grid circuit from an external source such as a dry battery or by inserting a dropping resistor of 200 ohms in the cathode lead, suitably by-passed by a condenser to allow the r.f. component through. From Ohm's Law E = I × R and at 2 volts the anode current is 10 m/A.; therefore 10R = 2 × 1,000 or R = 200 ohms. Secondly, the alternating voltage applied to the grid must not exceed 2 volts so that at one extremity the grid bias becomes – 4 (still on the straight portion of the curve) and at the other extremity 0 volts (but not in the region of grid current). The object of this valve is to produce an amplified reproduction of the

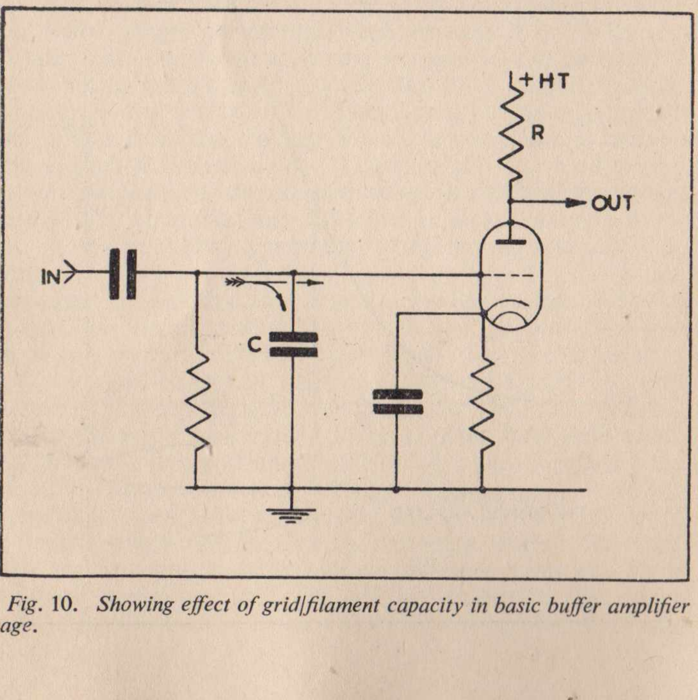

Fig. 10. *Showing effect of grid/filament capacity in basic buffer amplifier stage.*

voltage applied to the grid across the anode load resistance R in the theoretical circuit (Fig. 10) without placing any load on the drive. To obtain the maximum results the value of R should be theoretically, three to five times the plate resistance of the valve. Unfortunately, the average high gain valve has a very high plate resistance—a megohm or more—so that it becomes impracticable to make the load resistance anything like the value it should be. The grid to cathode capacity of the valve, represented by condenser C in the diagram, acts more as a pure resistance at the frequencies being considered and consequently will tend to " drain off " to earth a considerable part of the voltage fed to the grid from the oscillator. This capacity, therefore, acts as a load—which is just what is to be avoided in designing the buffer. This defect can be minimised as much as possible by choosing a valve having very low internal capacity values, and the Mullard EF50 high gain short-based pentode acts as a very effective compromise. The load resistance R should be made as high as possible having regard to the available H.T. supply.

The ideal method of testing for overload on this valve and to check for optimum output, is by means of a valve voltmeter; but as this piece of apparatus is not possessed by every amateur, the next best method is to listen to the signal in the receiver when the feed condenser is varied from minimum upwards. A slight change in oscillator frequency will indicate that the buffer is being over-driven. The effect of placing a suitable load across the output of the buffer should also be observed, the object being to adjust the input to the highest point consistent with a constant frequency when the load is applied. It is worthwhile spending a considerable time in making these tests, for upon their effectiveness will depend the production of a perfectly steady note when the transmitter is in operation. Another check is to observe the measured anode current of this stage with or without drive. It should remain absolutely constant. A valve operating under these conditions is known as a Class A voltage amplifier.

The second buffer, though still operating in Class A, is designed to handle power to produce the necessary drive for the final amplifier, so that a valve having a low amplification factor and consequently a low plate resistance should be chosen. The Mullard EL32 output pentode is a very suitable type to use in this position, having a plate resistance of 70,000 ohms. It should be biased to approximately half cut-off, which, with 250 volts on the anode and screen, is –18 volts. The anode circuit can be tuned to the resonant frequency and a four or six turn link coupled to the " earthy " end of this coil for taking the r.f. output away to the next stage. Similar checks should be made with this stage to make sure the valve is operating correctly.

Even where frequency doubling is to be resorted to, it is generally advisable to incorporate these two buffers with the V.F.O. in one integral unit. In some of the crystal stages, such as the Tri-tet circuit for example, where doubling is taking place in the anode of the same valve, it is sometimes permissible to omit the buffers and to use the output from the Tri-tet to drive the final power amplifier directly. This is because the crystal has a locking effect on the frequency and the output from a Tri-tet is considerably greater than can be expected from the average V.F.O. and is sufficient to drive the final stage without further amplification.

The theory concerning the operation of doubler stages is somewhat complex and is perhaps best avoided in this book; but it should be remembered that this type of operation requires a bias several times in excess of cut-off value—cut-off being that value of grid bias which will prevent anode current from flowing. Consequently valves having amplification factors of from 20 to 200 are preferable for this type of work. For this reason tetrodes or pentodes make very good doublers while, on the whole, triodes are unsuitable. It also follows that unlike the Class A amplifier, a doubler will require a considerably higher voltage applied to its grid. Moreover, a milliammeter in the anode circuit will register current only when drive is applied and nothing at all when the drive is removed. Grid bias is best applied from an outside source such as an ordinary high tension battery; but since no current is drawn from this battery it will last for an indefinite period.

Chapter Four

POWER AMPLIFIERS

The choice of a power amplifier which supplies energy to the aerial system is very wide, depending upon the operating power, the amount of drive available, the source of high tension supply and many other factors. This chapter deals with the subject as broadly as possible. For illustration only, examples are given of lay-outs which are best left until later by the beginner until experience has been gained with simpler circuits.

Before becoming too deeply immersed in power amplifier design it will be as well to consider the problem of stability, since this can present formidable problems in buffers as well as final amplifiers (although in doublers to a lesser extent).

It has already been described how a triode will self-oscillate if its anode and grid circuits are tuned to resonance, the necessary feedback being accomplished by reason of the internal capacity of the valve, or by direct magnetic coupling between the two coils when suitably displaced or by capacity in the wiring. Where a valve is operating as a frequency doubler this is less likely to happen since the two circuits are tuned to different frequencies. In any case it is not required to happen at all in any stage except the actual oscillator and careful steps must be taken to stabilise all stages. Much can be done by careful disposition of the components, such as making sure that the axis of the grid coil is at right angles to that of the anode coil (thereby presenting minimum coupling); by separation and/or screening of these two circuits; and by careful lay-out of the wiring to reduce any possible capacity inter-action. Even with every care a triode will still self-oscillate under the stated conditions by virtue of the internal capacity between grid and anode causing sufficient energy from the anode circuit to be fed back into the grid, in proper phase, to build up and sustain oscillation. Screen grid, beam tetrode or pentode types of valves are less liable to this trouble because the screen element is at earth potential with regard to radio frequency and effectively prevents this small transfer of energy. Oscillation, if it does take place with these types, can generally be traced to one of the lay-out faults already described. If a triode is used, however, the trouble must be overcome in a different manner and this is done by a method called neutralisation. If it were possible to feed a small amount of energy back to the grid, equal to but opposite in phase to that reaching it via the internal capacity, the two currents would cancel one another and the valve would cease to oscillate. This is obtained with a single valve stage by centre-tapping the anode coil and connecting the end remote from the anode via a very small variable condenser to the grid. Figs. 11B and 11C illustrate this. Push-pull stages are neutralised by coupling the ends of the anode coil via two small condensers to the opposite grids.

The procedure for neutralisation is as follows: Insert a low reading milliammeter in the grid circuit of the amplifier under test, disconnect the H.T. supply, light the filament and apply grid drive from the preceding stage. Tune the grid until maximum reading is obtained on the meter and slowly tune the anode through resonance. At resonance the grid current will fall sharply in an unneutralised circuit. Adjust the small neutralising condenser slightly, re-tune both grid and anode circuits and compare the amount of dip on the meter. As the circuit approaches neutralisation this will become less until at complete neutralisation there will be no movement on the meter at all while the anode circuit is swung through resonance. This setting will hold good over a fairly wide range of frequencies—sufficient at least for operation over a large portion of any particular band. An amplifier which is incompletely neutralised will most likely be triggered into action when the drive is applied and will emit spurious radiations on another than the desired frequency. These may or may not continue when the drive is removed. At best it will cause bad keying characteristics; at worst considerable interference at one or more unwanted frequencies, so it is essential that this tendency should be controlled.

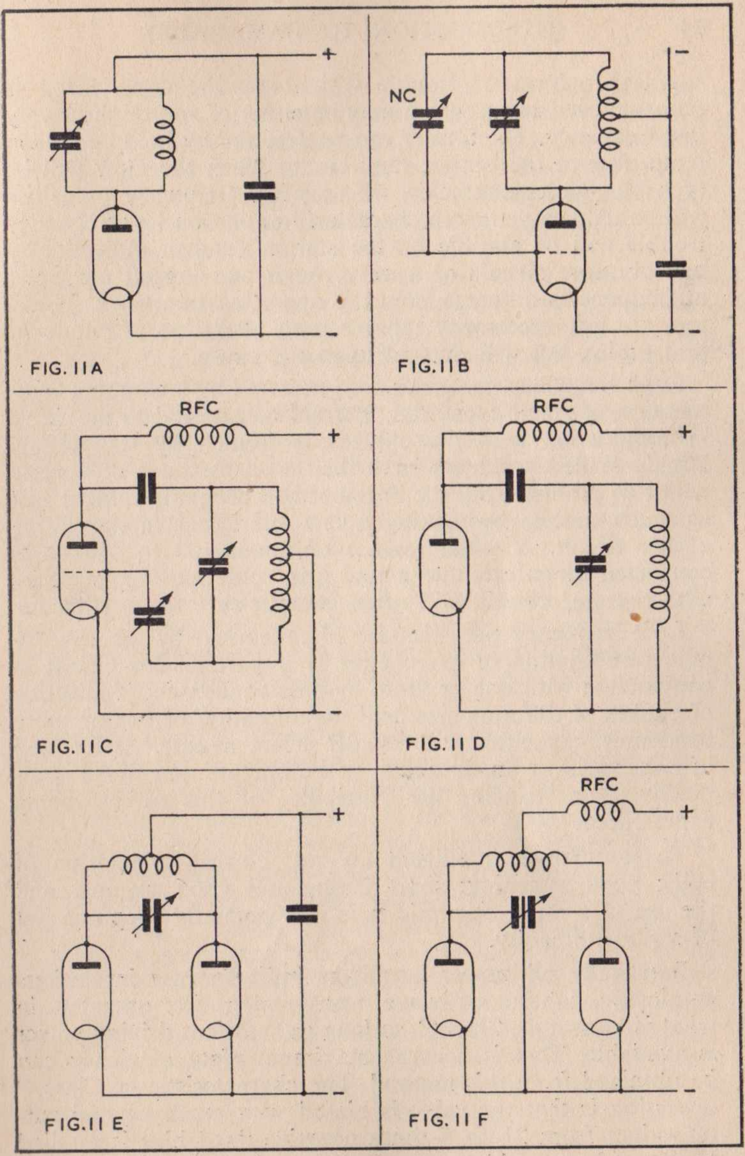

FIG. 11A

FIG. 11B

FIG. 11C

FIG. 11D

FIG. 11E

FIG. 11F

Various basic tank circuits: see text.

Another form of trouble which may be experienced is parasitic oscillation, which may be either of very high or very low frequency. The former can be detected by holding a neon lamp near to the output tank circuit when the glow will be of a blue-violet character, whereas low frequency parasitics will be reddish-yellow in character. In addition low frequency trouble will be audible on the station receiver indicated by one or more signals of a very rough and jagged character at frequencies different from the operating frequency. These, too, are not necessarily tunable with alteration of anode or grid tuning but will depend upon the cause.

High frequency parasitics are generated by a complex combination of small capacities, internal or external to the valve in conjunction with the inductance formed by the wiring. Highly skilled amateurs have their own methods of dealing with this problem; but the beginner will probably achieve just as much success by making a few alterations in the wiring of his circuit. A small resistor of about 100 to 470 ohms connected directly to the actual grid soldering tag, in series with the grid circuit, will often effect a cure for a parasitic.

Low frequency parastics are often caused by an unfortunate combination of r.f. chokes in a parallel fed circuit in conjunction with one or more by-pass condensers. The fitting of chokes of differing size, and the alteration of one or more condenser capacities will usually effect a cure. Series feed in either grid or anode circuit will eliminate one choke completely, thus reducing the possibility of this trouble being experienced.

To summarise, intelligent lay-out; correct orientation of coils; good screening; short wiring and good spacing, and the use of a multi-electrode tube will generally keep one out of serious difficulty.

Practically all power amplifiers built for use in stations employing continuous wave transmission are operated in what is known as Class C, so long as sufficient driving power is available. This is because maximum plate efficiency can be obtained from this method. The characteristic of Class C operation is that the valve is biased very much beyond cut-off value; from 2½ to 5 times negative fixed bias is applied to the grid as would be necessary to reduce the plate current to zero under no drive conditions. Let us examine what happens under slow-motion conditions. As drive is applied and the applied grid voltage starts to rise in a positive direction, an appreciable portion of time is spent in balancing out the excessive negative fixed bias. As this increase begins to approach its peak and the cut-off position is reached the anode current begins to flow.

For a very short time, as the grid curve reaches and passes its peak value, the grid is driven well into the positive zone and a very high anode current flows—so high, in fact, that the instantaneous power input is very much in excess of the capabilities of the valve. If this point were maintained for more than a fraction of time, irretrievable damage would be done to the valve and the anode would most probably melt. Before this has had time to take effect, however, the grid swing is on the return journey and it has to make an equal excursion into the opposite direction before once more returning to the attack on the next cycle. The effect of this is that a 10-watt valve, for example, is probably producing a power in the neighbourhood of 100 watts peak, in the form of a series of short, sharp impulses; but owing to the long time lag between each impulse, the actual rating of the valve (mean value) is not exceeded and the valve will not suffer any damage.

In order that full advantage may be taken of this method of operation it is necessary to see that the relative tuned circuits are very efficiently constructed. If they contained a high degree of internal resistance the damping effect would be such that each pulse would be quenched before the next one made its appearance. A low-loss circuit will exercise a flywheel effect and maintain oscillations during the intervening " dead " periods. The measure by which a circuit can be relied on to achieve this end is known as its " Q " or its factor of merit; and since the Q of a condenser is generally much higher than that of the best coil, it is the coil which is generally the controlling factor. Q is the ratio of the reactance to the total (not just D.C.) resistance and is expressed by the term $Q = 2\pi fL$ divided by the total resistance. It is of interest to note one reason for keeping losses low in the plate or " tank " circuit of the amplifier, when it is considered that the value of circulating current in this circuit at resonance is nearly Q times the anode current. For example, with an anode current of 100 milliamps and a Q of 20, almost 2 amperes of r.f. will be circulating in this circuit. Equally, the voltage across the tank circuit is a function of Q and very high voltages can be developed in a high Q circuit even with moderate anode current. Sometimes trouble is experienced with arcing across the tank condenser and this can usually be overcome by increasing the capacity with a corresponding reduction in inductance, thus reducing the Q value. A too high a Q may be troublesome and too low a Q will create conditions of inefficiency and tend to pass and radiate harmonics of the fundamental frequency, which is to be avoided.

In most transmitters of the single valve type—as opposed to push-pull circuits—a good figure to aim at is about 12 and this is achieved by careful low-loss design of coil; short, thick, connecting leads to the condenser and a correct ratio between the two. In no circumstances should the Q be reduced to the desired figure by adding resistance; aim at the lowest possible resistance loss and if necessary reduce the number of turns and increase the capacity. At this point it should be mentioned that frequency doubling circuits operate more efficiently with a high L/C ratio—that is to say, with a small capacity in parallel with a large inductance, while power amplifier tanks for C.W. work and Class C operation are more efficient with a medium to high L/C ratio.

Turning now to the various forms in which amplifier tank circuits can be arranged, Fig. 11A shows the conventional series feed arrangement. It is simple and avoids the use of and r.f. choke (avoiding possible parasitics), but has the disadvantage that both sides of the tuning condenser are " live " so that the rotor must be insulated from the chassis front panel and from any possibility of the operator touching it when tuning up. Fig. 11B is basically the same circuit but rearranged for use with a triode, so that neutralisation may be accomplished. Fig. 11D is the shunt fed arrangement. In this arrangement one side of the condenser is at earth potential and mechanical construction is thereby simplified. Fig. 11C is the same circuit arranged for triode neutralisation. Fig. 11E is one form of lay-out for push-pull operation. The condenser is " live " and must be protected. Fig. 11F employs a split stator tuning condenser with the rotor earthed. Neutralisation can be accomplished in either of these circuits by cross-coupling the anodes to the opposing grids as previously described.

While push-pull operation need not be attempted by the amateur building his first transmitter, it has very definite advantages over the single-valve type, apart from the more involved wiring and cost of the extra components. An analogy is the horizontally-opposed flat twin internal combustion engine. Instead of an impulse being applied once in every cycle, as in the case of the single-valve amplifier, it is applied twice in each cycle, alternately to each valve, which allows for a reduction of half in the required Q of the tank circuit. There is greater efficiency, and symmetrical layout with regard to earth. Moreover, where neutralisation is required, it is usually more effectively done with a push-pull circuit than with a single-valve amplifier. Although omitted from the diagram the grids also operate with similar tuning arrangements, and feeding is usually by means of link coupling to the centre or earth potential point of the grid coil. Coupling arrangements will be dealt with at a later stage. However, inefficiency can arise from a choice of badly matched valves, where one valve is doing all the work, and for this and other reasons it is advisable to gain experience on single valve circuits and leave push-pull until higher power operation is contemplated.

Chapter Five

COUPLING AND P.A. TUNING

The transference of power or drive from one stage to its succeeding stage must be provided for and is done in three main ways: (1) By direct inductive coupling between the anode coil of one valve to the grid coil of the driven valve. This is by no means ideal and is rarely used. (2) By capacity coupling. This is widely used in lower power stages, such as coupling the oscillator to its buffer, and if the condenser is made variable some measure of control is possible. However, unless the impedance of the two circuits is very similar there will be a serious mis-match which can only be adjusted by tapping down on one of the two coils. (3) Energy can be transferred by means of link coupling and is, perhaps, the best method of all, particularly as it lends itself very readily to the power spacing of the components on the chassis in correct physical relationship to each other, and allows for the transfer of energy over quite considerable distances with very small loss. It provides a means of adjusting impedance between the two circuits and is readily made variable so that the degree of coupling can be varied from almost nil to maximum. Fig. 12 A-B-C shows these methods. The wire used in the connecting link can be twisted pair (for very short runs and moderate frequencies); co-axial cable, which consists of a single wire moulded in P.V.C. surrounded by a flexible braided copper sheath and surmounted by an insulated covering; balanced twin feeder which is two-core suitably insulated; or by means of one of the flat 300 ohm insulated transmission line types. The co-axial and balanced twin types usually run 75-85 ohms and can therefore transfer a relatively high current at low voltage with less risk of radiation or pick-up effects. The link coils usually consist of from two to six turns space wound heavy gauge wire, suitably mounted so that either or both may be adjusted in relation to the coils they are coupled to, and they should be coupled to that end of the coil which has the lower r.f. potential—the " earthy " end in the case of a shunt fed circuit or the end remote from the anode in the case of a series fed circuit. In push-pull circuits the couple should be at the centre tap position. The pick-up link actually behaves as one side of a transformer in relation to the exciter coil and since the turns are few there is a voltage step-down effect. At the grid of the driven stage the second link transforms up the voltage in accordance with the turns ratio, with a corresponding reduction in current. Because of the low voltage existing in the connecting leads there is very little likelihood of unwanted coupling effects taking place in the body of the transmitter. This method of r.f. power transmission is almost invariably

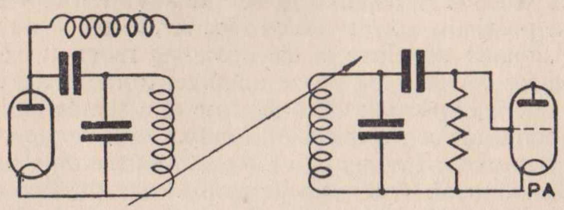

FIG. 12A.

DIRECT COUPLING

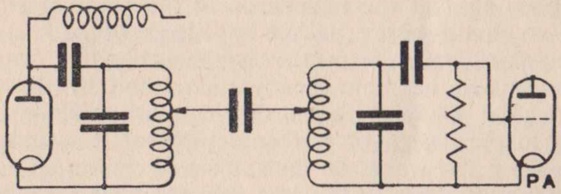

FIG. 12B.

CAPACITY COUPLING SHOWING PROVISION (*A*) FOR MATCHING THE TWO CIRCUITS BY TAPPING DOWN AND (*B*) ADJUSTABLE DRIVE BY MAKING THE COUPLING CONDENSER VARIABLE.

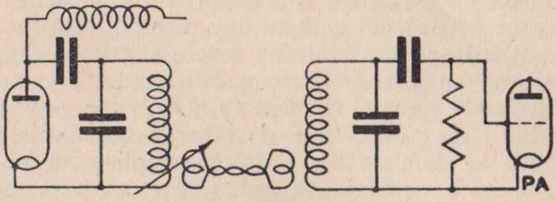

FIG. 12C.

LINK COUPLING. NOTE ONE COUPLING COIL IS MADE VARIABLE.

adopted when it is required to couple a V.F.O. unit placed in close proximity to the station receiver, to the main transmitter situated elsewhere in the operating room. It can also be used for coupling the power amplifier to the aerial tuning unit if one is employed; or in the case of a simple half wave dipole aerial for conveying the r.f. output over very considerable distances for feeding into the centre of the dipole radiator. This form of feeder can be used in any position where high losses would be incurred if a higher voltage form of transfer were employed. It can be buried underground; tacked round the picture rail, carried right through the house from transmitter to aerial lead-in if they should be at opposite ends of the house, the only consideration being that it must be terminated in its characteristic impedance. This is another way of saying that the impedance at the point of entry to the driven circuit must equal the impedance of the line, which in a co-axial feeder is in the neighbourhood of 75 ohms. This point will be more clearly understood by the reader after reading Chapter Seven dealing with aerials. Before coming to the design of further equipment it would be as well to say a few words on the subject of correct adjustment of a power amplifier as this is a subject which is frequently passed over in technical articles on the assumption that the reader already knows the right procedure.

Assuming that the power amplifier is wired up and ready for test and some means of applying excitation is available, whether it is a crystal or V.F.O. stage, the first thing is to construct some form of dummy or artificial aerial. This is very necessary for as many preliminary adjustments as possible must be carried out without any possibility of the signal being radiated and thus causing severe and unnecessary interference on an already overcrowded band. This artificial aerial is simply an arrangement to absorb the power given out by the P.A. tank circuit—in other words a load which is designed to simulate the effect of coupling on an aerial system. In its basic form it consists of a condenser and inductance forming a resonant circuit with the addition of a suitable resistance. A very useful refinement is the inclusion in this circuit of a thermo-couple ammeter or a lamp of suitable wattage for the power of the amplifier in question. Fig. 13 A-B-C gives several variations of this arrangement.

The inclusion of a meter or lamp is for indicating resonance and to give some guidance as to the degree of energy transference.

With everything connected up, light the filaments and apply reduced H.T. to the anode of the power amplifier. We will assume that the previous driver stage is tuned to maximum output and the transfer between driver and P.A. is by means of a link. With one eye on the anode milliammeter in the P.A. increase the degree of coupling by tightening the link and tune the P.A. grid circuit until anode current flows, as shown by a reading on the appropriate meter. This is done with the aerial load backed off. As soon as this condition is obtained, rapidly tune the anode condenser in the P.A. tank circuit until a point is reached where there is a sudden dip shown in the meter. Make slight adjustments to all tuned circuits from the P.A. grid backwards to give *maximum* reading on the P.A. meter and carefully retune P.A. anode circuit for *minimum* reading. In a well designed lay-out the minimum reading obtained with the P.A. tank in exact resonance should be very low—about 15-20 per cent of the figure obtained when the P.A. is detuned. If a very pronounced dip does not occur there is bad circuit inefficiency somewhere, or else parasitics are present. Now, with the P.A. tank in resonance, gradually couple up the dummy aerial load and tune this load to resonance. This point will be shown (a) by a substantial increase in P.A. meter reading and (b) some indication on the thermo-couple or lamp in the anode load. For full power tests, apply full H.T. and increase the aerial load coupling, making slight variations in the aerial load condenser but without touching any of the preceding adjustments, until the P.A. meter indicates a reading corresponding to either the maximum permitted power or the full rating of the valve, whichever is the lower. Now listen to the transmission on the station receiver, carefully checking the keying characteristics and general stability as shown by the absence of spurious radiations, sidebands or parasitics generally. If the keying is crisp and clean with no indication of raggedness or chirps and there is no evidence of parasitics the transmitter is then ready to go on the air. Switch off; remove the dummy aerial system, connect the aerial or aerial tuning unit if one is used, make sure that the frequency of

ARTIFICIAL AERIAL.
UNTUNED CIRCUIT.

FIG. 13A.

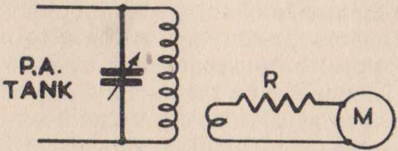

ARTIFICIAL AERIAL, WITH
TAPPING TO ADJUST LOADING.

FIG. 13B.

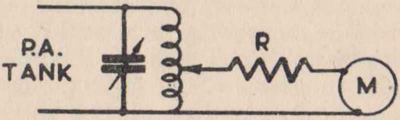

FIG. 13C.

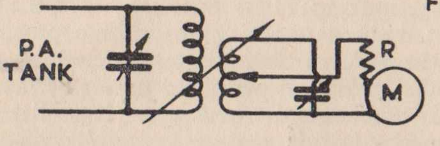

ARTIFICIAL AERIAL, WITH
RESONANT CIRCUIT
AND ADJUSTABLE TAP.

your intended transmission does not clash with any other station and that it is correctly placed inside the limits of your permitted band, switch on the filaments and apply reduced H.T. With the aerial circuit backed off, quickly check that your P.A. is still tuned to resonance; bring up the aerial coupling gradually, at the same time retuning the aerial coupling condenser for maximum reading on the P.A. meter until the correct or desired loading is obtained. You are then fully air-borne and ready for your first contact. These final adjustments should, of course, be made as quickly as possible and preferably at a time when the band is not crowded with other stations. Where no separate aerial tuning arrangement is being used and the aerial is either directly coupled to the P.A. tank via a blocking condenser or the aerial feeder is link-coupled co-axial cable, the procedure is slightly different. With no aerial load the resonant dip on the P.A. meter is very marked. As the load is increased this dip will become less and less pronounced as the P.A. condenser is swung side to side on either side of resonance, the maximum degree of coupling being that state where only a faintly perceptible dip is to be observed at the resonant position. It should be clearly understood that this point must not be reached if it should exceed either the maximum licenced power or the rating of the valve in use. If, with the aerial system attached, the tuning does not react as indicated, the trouble will almost certainly lie in incorrect aerial or aerial coupling design and will be dealt with accordingly in the chapter on aerials. In certain instances a very slight readjustment of P.A. tank condenser is permitted at maximum coupling position to balance out any reactance effect; but with a correctly matched aerial or coupler this should not be necessary. These final remarks apply, of course, where an aerial coupling circuit is employed since with direct coupling the P.A. tank condenser serves a double purpose.

Chapter Six

POWER SUPPLIES

This is a very important subject and the experimenter will be well repaid by giving the subject considerable thought before deciding upon his design. We are concerning ourselves here with those amateurs (who will be in the majority) who have access to a mains supply of 50 cycles single phase. For those less fortunate who are dependent upon batteries or D.C. mains the former has very little choice in the matter and, in fact, the whole eventual lay-out will be centred on this subject, whilst the problems of the latter require special consideration which would be more ably dealt with by one with some experience of this form of power supply. The first point to decide is the eventual possible demand which will be required. If the experimenter intends to work up to a 150-watt station with multi-band operation, it follows that the demands to be made on his power pack to feed doubler stages and his final amplifier will be considerable, and he might be well advised to plan accordingly, so that when the time comes he will not be faced with a power pack rebuild. If he intends to limit his activities to a more simple design, with perhaps 30-40 watts as his eventual maximum, then a smaller lay-out can be selected with a correspondingly lower financial outlay. In the following pages several alternatives are given. In any event if V.F.O. operation is decided upon in whole or in part, it is advisable to power this unit independent of the remainder of the transmitter and a design suitable for this use is included.

It is almost universal practice to use full-wave rectification by means of suitable valve or valves when producing direct current from a commercial alternating current source. The desired voltage step-up is reached by means of a mains transformer in which provision for heating one or more filament circuits is incorporated. By this method a ripple, which is double that of the supply frequency, is obtained and this simplifies problems of smoothing out the ripple to produce the necessary steady D.C. While rectification can be obtained by means of metal rectifiers the more usual method is by means of the valve, although both methods have their advantages and disadvantages. The valves chosen may be either a pair of diodes of the hard type or of the mercury vapour type, or a double diode. Smoothing is done by a suitable combination of condensers and one or more iron-core chokes. Fig. 14A gives the basic circuit for a half-wave rectifier by means of a single diode valve. The alternating mains input is fed into a transformer which has two output windings; a low voltage winding for heating the filament and a high voltage for providing the required D.C. output. Condensers C1 and C2 are usually of 4 mfd. capacity each and rated to withstand the full H.T. voltage without danger of breakdown. The L.F. choke should be of reasonably low D.C. resistance to avoid high voltage drop; the windings heavy enough to carry the rated load and the impedance sufficient to provide adequate smoothing. Values of 100 ohms and 20 henries are frequently chosen. To fully understand the working of the smoothing network the gradual transformation of two and a half cycles of the applied input should be studied. Fig. 14B shows the normal sine wave of the alternating current as it would appear across the transformer winding at A. After passing through the rectifying valve as in Fig. 14C it will be seen that one half-cycle has been suppressed. The addition of the first condenser C1 acts as a reservoir, and, assuming a load is connected across the output, it will be seen from Fig. 14D how the condenser charges up each time and gradually supplies energy at a decreasing potential until the next pulse brings the voltage up to its peak value again. Finally, the addition of the smoothing choke and the second condenser C2 completes the smoothing and Fig. 14E shows the output as D.C. with a 50 cycle ripple (assuming the mains frequency is the normal 50 cycles).

To obtain a more efficient result and to facilitate the smoothing arrangements it is usual, however, to use two diodes or a double-diode as in Fig. 15A. The smoothing network can be exactly the same as in the half-wave circuit;

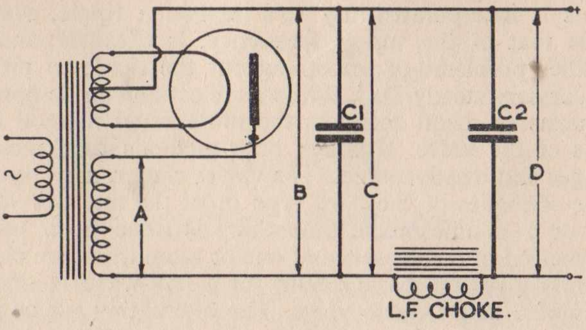

FIG. 14A. BASIC CIRCUIT OF HALF-WAVE VALVE RECTIFIER.

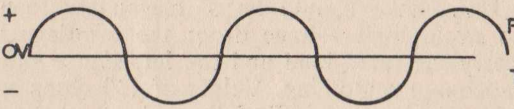

FIG.14B
SEE
TEXT.

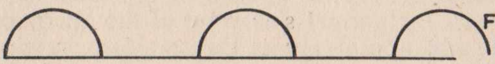

FIG.14C.
SEE
TEXT.

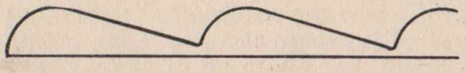

FIG.14.D
SEE
TEXT.

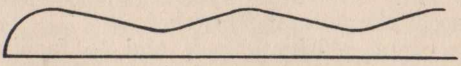

FIG.14.E
SEE
TEXT.

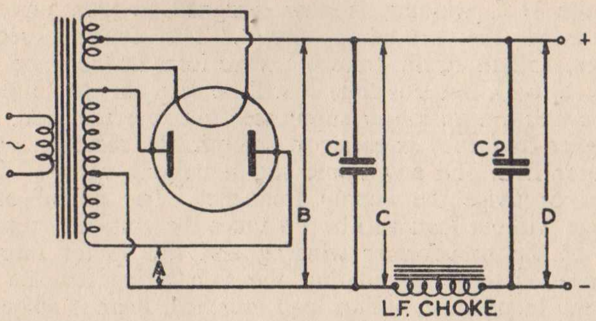

FIG. 15A. BASIC CIRCUIT OF FULL-WAVE VALVE RECTIFIER.

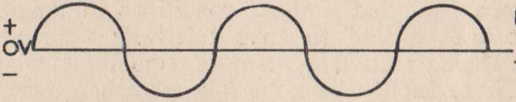

FIG 15B
SEE
TEXT.

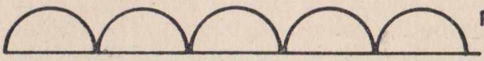

FIG. 15C.
SEE
TEXT.

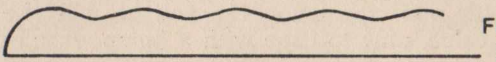

FIG. 15D.
SEE
TEXT.

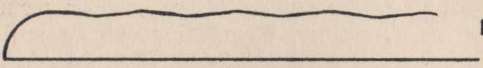

FIG. 15E.
SEE
TEXT.

but the H.T. winding is now designed to give twice the voltage of the preceding circuit. The four subsequent figures, 15B to E, illustrate the wave form at the same positions A to D, but this time it will be seen that the alternate half cycles are no longer suppressed but reversed; and, since a higher frequency is easier to smooth, the resulting output is purer D.C. and any ripple still remaining will be of 100 cycles or twice the supply frequency. The actual output voltage without load will be 1·4 times the voltage across one half of the transformer winding and this factor must be reckoned with in calculating the safe rating for the condensers. In practice, with a load attached, there is some voltage drop across the choke and a somewhat higher drop across the valve itself owing to its internal resistance, so that the final output under load will not greatly exceed the voltage across the transformer windings A. The form of filter shown in the two preceding examples is known as Condenser Input and as a consequence of the rather large change which takes place between load and no-load conditions in the output potential it can be said to have relatively poor voltage regulation. There is another form of smoothing which is known as Choke Input where the first member of the filter becomes the choke followed by a condenser. A single section filter of this type is less effective from a smoothing point of view than the Condenser Input type, but it has the advantage of much better voltage regulation. The output voltage, moreover, is likely to be in the region of 0·9 of the rectifier input voltage. Voltage regulation is very important, especially when power is being supplied to a Class C amplifier, since in key-up position the amplifier is taking no load and consequently with poor regulation the voltage will rise to the maximum value, only to drop with a bump when excitation is applied. This tends to produce conditions resulting in a poor note of the " bloopy " kind which is all too frequently heard over the air. However, under conditions of normal loading, the Condenser Input filter can be made to give quite satisfactory results where a valve of the hard or vacuum type is being used as a rectifier. Regulation can be still further improved, moreover, by the addition of a bleeder resistor across the output terminals of the power unit. This resistor is designed to draw approximately 10 per cent of the full rated load and is permanently fitted in position. It serves a dual purpose: (1) to tend to hold the voltage down below its peak value when the amplifier load is removed and (2) (which is important) is a means of discharging the filter condensers when the equipment is switched off. High capacity condensers in good condition will hold their charge for a very long time and the operator who switches off his set and then plunges his arm into the equipment to make some adjustment is likely to receive a very nasty and dangerous shock by receiving the discharge of these condensers. After all it should be remembered *at all times* that the voltages employed in the average transmitter are dangerously high—far higher than the normal mains supply—and safety precautions must be observed.

Reverting to the bleeder resistor, this will serve to discharge the filter condensers within a few seconds after power has been switched off. The resistor chosen should be able to carry a wattage considerably in excess of the calculated 10 per cent load to avoid any likelihood of a burnt-out component and an unsuspected charge remaining in the condensers. Apart from this consideration it would not be out of place to say a few words about the input side at this stage and a very useful and fool-proof safety device. Every station should have a heavy double-pole switch fitted right at the mains input which will completely isolate the entire station when in the off position. Between this switch and the line feeding the H.T. transformers fit a further double-pole switch which will throw the supply either to the H.T. transformers or to a lamp socket situated in a prominent position. If a low wattage lamp is now plugged into this holder—it can be painted green—it should then be a golden rule at the station never to make any adjustments of an internal nature *unless* this green lamp is illuminated. If it is, the mains *must* be disconnected from any apparatus producing high voltage. If it is not, either the H.T. supply is switched on, or the lamp might have burned out; but in either case the operator pauses to consider the position. This system has the advantage over the ordinary red danger lamp, because burn-outs do occur and it is an easy matter to observe that the red light is out and to *assume* that in consequence the apparatus is safe.

Mention may now be made of another form of rectifying equipment, namely, the Mercury Vapour rectifier. It is a diode valve; but in place of a vacuum a small quantity of mercury is introduced into the envelope. This mercury vaporises when the cathode is heated and ionises when the H.T. is applied to the anode, thus causing the characteristic blue glow which is seen with this type of valve when in operation. The plate-cathode voltage drop is very low in this valve and remains practically constant at about 15 volts, irrespective of load. Hence there is less power lost in the rectifier and a much improved regulation at the output. This type of tube is normally operated into a Choke Input type of filter, and moreover the filter requires more careful designing. These valves are frequently employed where large power outputs are required, and for this reason concentration will be made on designs employing the more usual vacuum type.

Certain types of equipment, for example, most V.F.O.s, operate more effectively if they are supplied from a power

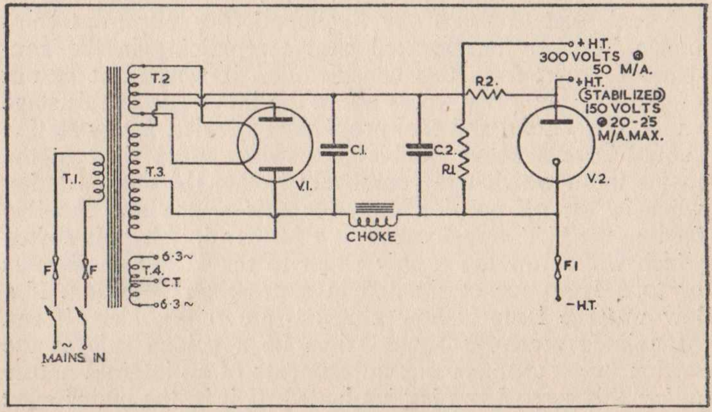

Fig. 16. *Power Pack suitable for V.F.O.*

CIRCUIT CONSTANTS

V.1 ; Mullard EZ35—V.2 ; VR 150/30
F ; Mains fuses
F.1 ; Flashlamp bulb
C.1 ; C.2 ; 4 mfd 500 v.wg TCC CE13P
Choke ; 20 henry 100 m/A

R.1 ; 56,000 ohms 3w.
R.2 ; 4,700 ohms 5w.
T.1 ; Mains supply voltage
T.2 ; 6·3 volts 1 amp.
T.3 ; 250-0-250 volts
T.4 ; 6·3 volts 2 amp.

pack having exceptionally good regulation, and since their requirements are generally modest, this condition can be met by the employment of a voltage stabiliser valve. This is a valve of the cold or neon type. It has no heated cathode, but will " strike " when a certain voltage is applied across it and " burn " at a steady but somewhat lower voltage. A limiting resistor must be placed in series with it to restrict the current flowing through it while in operation and, so long as the equipment being supplied is not overloading its capabilities, it will maintain the applied voltage at a very constant figure.

Fig. 16 shows the detailed design for a small power pack, suitable for feeding a V.F.O. together with its associated buffer amplifiers, and incorporates voltage stabilisation.

Fig. 17 shows a suitable pack for supplying the require-

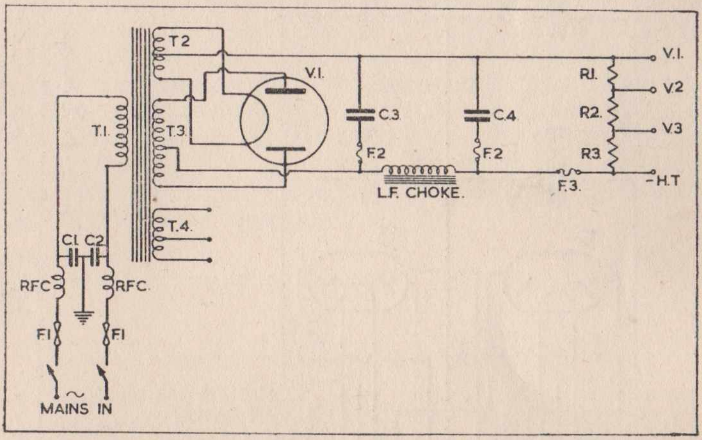

Fig. 17. *Power Pack for* 25-*watt Transmitter.*

CIRCUIT CONSTANTS

V.1 ; Mullard FW4-500
F.1. ; Main fuses
F.2—F.3 ; Flashlamp bulbs
C.1—C.2 ; 0·5 mfd 400 v.wg. TCC 545
C.3—C.4 ; 4·0 mfd 600 v.wg. TCC 92
Choke ; 20 henry 150 m/a
RFC ; Mains r.f. chokes

R.1 ; 5,000 ohms 10 watt.
R.2 ; 6,500 ohms 5 watt.
R.3 ; 25,000 ohms 5 watt
T.1 ; Supply mains voltage
T.2 ; 4 volts 4 amps.
T.3 ; 400-0-400 volts 150 m/A
T.4 ; 6·3 volts 4 amps.

Output :—V.1: 500v @ 50 m/A. V.2: 350v @ 15 m/A. V.3: 250v @ 5 m/A.

F1 = ·4 amps

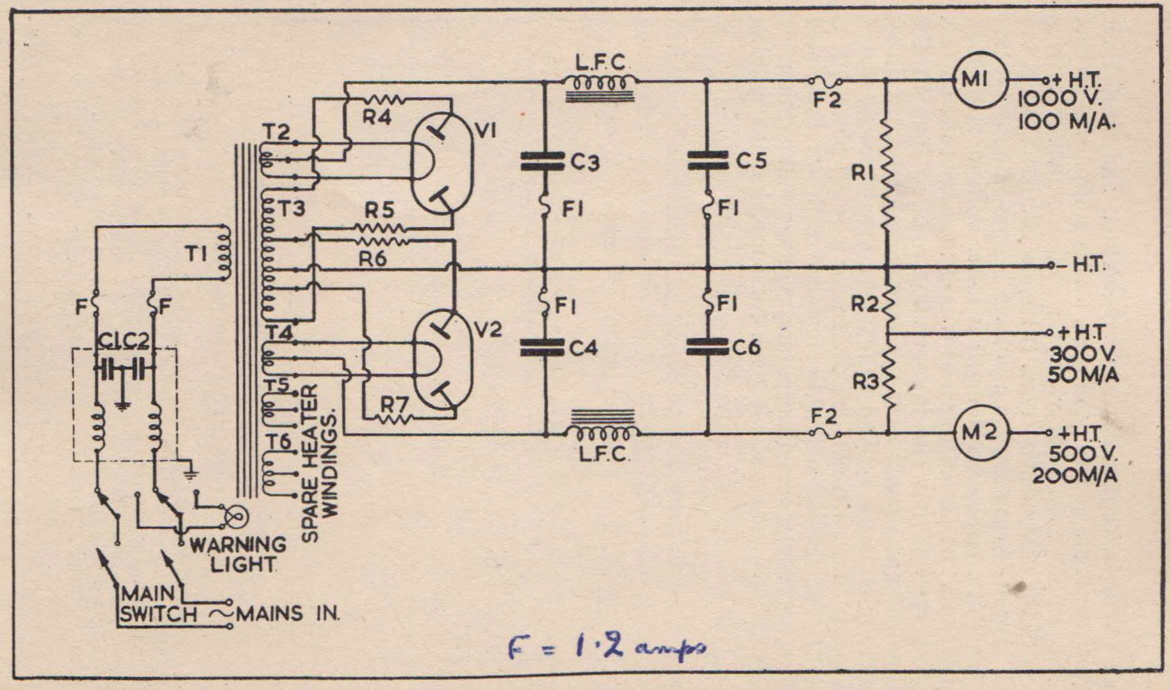

F = 1·2 amps

Fig. 18. *Multiple Power Pack Design.*

ments of a two- or three-valve crystal-controlled transmitter of the 25-watt type, while Fig. 18 gives the complete lay-out for a multiple power pack, capable of feeding a complete 150-watt station with the usual ancillaries, and incorporating safety devices and mains filters. The latter lay-out is one which once built will serve the requirements of any subsequent developments at the station for some time to come, and from a long-term point of view, it has much to commend it. Voltage stabilisation can be incorporated if required for feeding the V.F.O. The actual lay-out and design of any power pack is largely a matter for the constructor's own decision. A solid wooden baseboard large enough to anchor all the heavy components is quite satisfactory; but be sure that all wiring is either rigid enough to be self-supporting and carefully separated from its neighbour, or else use insulated wire of heavy construction to obviate any flash-over danger. Finally, it is a good plan to make a light framework which can be covered with perforated zinc sheet—the material used for meat-safes. This allows adequate ventilation and prevents any possibility of tools or other pieces of equipment dropping into the " works." The mains filter should be housed in an earthed metal container and fitted close to the transformer input terminals.

CIRCUIT CONSTANTS FOR FIG. 18

V.1 ; Mullard FW4-800
V.2 ; Mullard FW4-500
T.1 ; Mains supply voltage
T.2—T.4 ; 4 volts 3 amps. C.T.
T.3 ; 850-500-0-500-850 volts RMS
T.5—T.6 ; suggest 6·3 volts 3 amps. C.T.
C.1—C.2 ; 0·5 mfd TCC type 343
C.3—C.5 ; 4 mfd TCC type 131 1500 v.wg.
C.4—C.6 ; 4 mfd TCC type 92 600 v.wg.

R.1 ; 75,000 ohms 20 watts
R.2 ; 22,000 ohms 5 watts
R.3 ; 3,000 ohms 20 watts
R.4—R.5 ; 150 ohms 5 watts
R.6—R.7 ; 220 ohms 5 watts
L.F. Chokes ; 20 henry 200 m/A
F ; Mains fuses
F.1—F.2 ; Flashlamp bulbs
M.1 ; 0-150 milliammeter m/c
M.2 ; 0-300 milliammeter m/c

The coils shown in series with each mains leg are r.f. filter chokes as in Fig. 17.

Chapter Seven

AERIAL ARRAYS

It is now necessary to consider some of the more simple aerial arrays, all of which will give satisfactory results under normal conditions. Aerial design is a subject about which much has been written and it is possible to deal but briefly with this absorbing subject. The basic aerial upon which virtually all designs are built up is the half-wave di-pole. The easiest way in which to understand its operation is to consider first a definite wavelength or frequency—say 14 megacycles. This is equivalent to 21·4 metres approximately, which in turn is equivalent to about 70 feet, half of which would be 35 feet. For reasons which need not be discussed here, an electrical half wavelength is approximately 95 per cent of its physical length, so that the length of wire required to produce a 14 m/c. di-pole would be approximately 33 feet. Now, instead of a wire between two points, imagine a piece of slightly stretched elastic. Set this in vibration by twanging it at its centre and it will vibrate back and forth, the maximum amplitude being at the centre, tapering off to no movement at all at the fixed terminating points. This roughly represents alternations in current which take place in the wire, maximum current being at the centre and only a very small amount, owing to leakage losses, at the ends. Since the voltage is 180° out of phase with the current, it follows that there is maximum voltage at the extremities and minimum at the centre of point of largest current. It so happens that the radiation impedance of a simple di-pole taken at its centre is approximately 73 ohms depending on its effective height above ground, and as this is a good match for co-axial cable, it would seem that if the aerial were to be opened at the exact centre and connected up to the co-axial feeder carrying r.f. from the transmitter, energy would be effectively transferred to the aerial and it would absorb or radiate that energy. This does, in fact, happen, and the di-pole is a very effective radiator provided a narrow band of frequencies are in use and it is cut to the right length to suit the middle of this narrow band. It radiates best in a direction at right angles to its length and gives very little " end-fire " effect. Were it to be erected vertically, radiation would take place equally in all directions with very little either upwards or downwards; but vertical polarisation is not to be recommended on the frequencies with which we are concerned. One big disadvantage of this type of aerial will already have been seen—it can only be used for one band operation. It could be end-fed—or voltage fed—at other frequencies; but would be too short to be effective at longer wavelengths (always bearing in mind that the more wire there is up aloft, the more effective it acts as a radiator). End, or voltage, feeding has the disadvantage that the high voltage end of the aerial has to come right into the operating room and losses are apt to be higher than where current feed can be employed. This can be overcome by arranging for the aerial to be fed at a distance by means of tuned feeders, but this brings in complications which are difficult for the relative beginner to overcome. The author favours end feed for simplicity and in the following table the number of wavelengths for wires of different lengths are shown for the five bands.

Length in feet.	Megacycles.				
	1·7	3·5	7·0	14·0	28·0
33	$\frac{1}{16}$	$\frac{1}{8}$	$\frac{1}{4}$	$\frac{1}{2}$	1
66	$\frac{1}{8}$	$\frac{1}{4}$	$\frac{1}{2}$	1	2
132	$\frac{1}{4}$	$\frac{1}{2}$	1	2	4
264	$\frac{1}{2}$	1	2	4	8

It will be seen that nothing shorter than 132 feet can be effectively used on the top band and even then as much wire again must be added in the form of inductance to load up the aerial to $\frac{1}{2}$ wavelength. Omitting the top band, 66 feet

3·3ft = 1 metre approx

is about the minimum length capable of effective operation on all other bands, while 132 feet is better and to those who have the room to put up the whole 264 feet, the writer strongly recommends this length. The amount of down-lead (which in this case is included in the total length) is small in relation to the total length, which means that by far the greater part of the aerial is way up in the clear and acting as an efficient radiator. If care is taken to keep the lead-in as unscreened as possible, with good low-loss lead-in insulation, the losses sustained are not likely to be so great as would arise from badly designed feeders. The author has found, after trying out many aerials over a number of years, that the long wire gives the best results with the least worry on all bands. A direction running almost due East-West will give world-wide coverage on 14 mcs. Radiation on this band is least at right angles to the wire and this direction coincides with large ocean areas. It is equally effective on the other bands. Such an aerial, or for that matter the 66 and 132 feet models, works best with aerial couplers and at the author's station two of these are employed—one covering 3·5 and 7 mc. operation; the other 14 and 28 mc. bands and for top band work it can be clipped directly on to the P.A. tank coil via a blocking condenser. Fig. 19 shows how aerials of different lengths can be coupled up and illustrates the form of aerial coupler already described and suitable for two-band switching. Note that ¼ wave aerials must be worked to earth when they operate as what is known as the Marconi aerial. Remember that an end-fed aerial must always be voltage fed. If it is too short for the wavelength employed it must be loaded up to ½ wave or to its multiple by adding inductance; if it is too long it can be shortened electrically by putting a variable capacity in series to bring it down to ½ wave or to its multiple. If this is not done it will not be in harmonic relationship to the frequency of the transmitter and will not, therefore, act as an effective radiator. In erecting aerials a position as free from screening as possible should be chosen. Get it as high as possible; fit good insulators, especially at the end and at any point coinciding with a high voltage point; keep the D.C. resistance low by avoiding joints or at least by making sure that any joints are well sweated; and try to keep the lead-in away from walls, gutters and piping.

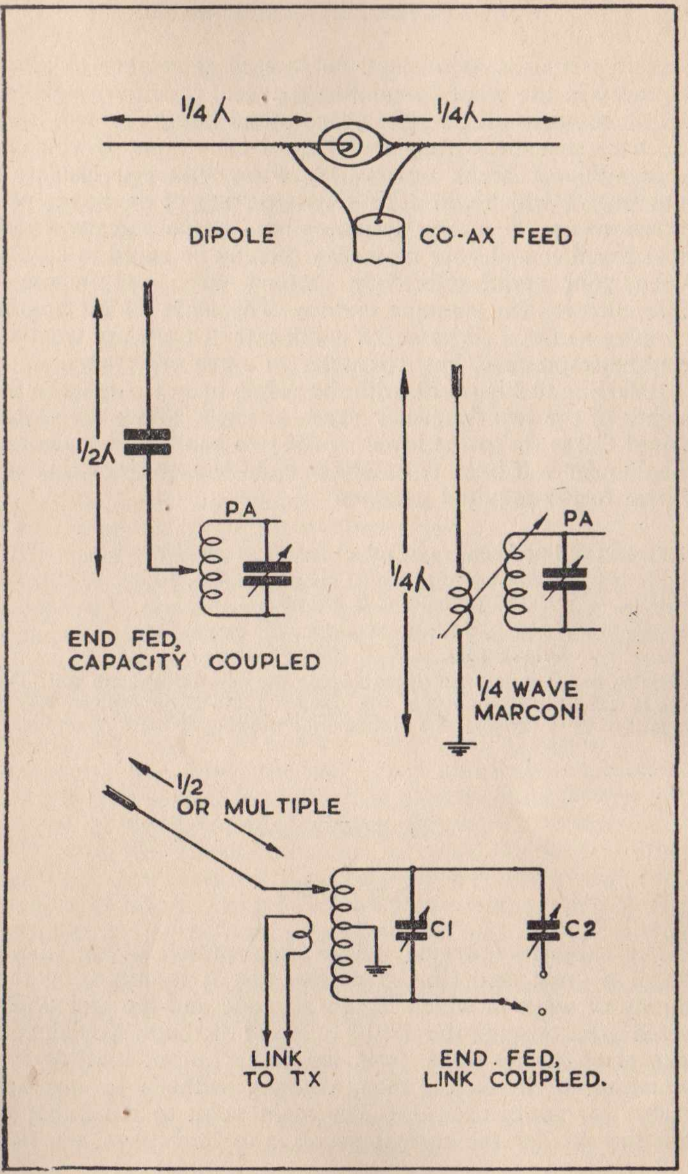

Fig. 19. Aerial couplings

If a tree is used as a mast, be sure to remember to allow for sway in the wind by running the haul rope over a pulley with a compensating weight near ground level. This will keep the wire taut and steady under most conditions. If you use a guyed mast break up the guy wires with egg insulators into lengths which will not resonate on any of the bands you intend to use. If an egg insulator breaks, the wires will still hold together and your mast may thereby be saved in a gale. Keep your aerial effectively earthed when not in use—especially in the summer months. The sight of fat sparks jumping across a series aerial condenser in thundery weather may be impressive, but it is wiser to earth everything.

Referring to Figure 19, with the switch open C.1 is set to the higher of the two frequency bands selected. With the switch closed C.2 is set to the lower of the two bands and thereafter the coupler will operate on either band simply by setting the switch to the required position.

Suggested coil and condenser values for these couplers are—

3·5—7·0 m.c., 20 turns, 22 s.w.g., 2½″ dia.
C.1, 50 pFd. C.2, 250 pFd.

14—28 m.c., 6 turns, 14 s.w.g., 2½″ dia.
C.1, 25 pFd. C.2, 100 pFd.

Variable coupling is effected by tapping the aerial down the coil. The link is wound in the centre of the tuned coil and is not critical. It may consist of 2—3 turns with a similar link winding at the P.A. anode.

Chapter Eight

KEYING

The subject of keying a C.W. transmitter is one about which a great deal can be written and it is surprising the variety of ways in which it can be done and the difficulties which arise through the use of different methods. Keying can take place in any stage, from the mains output itself to the actual aerial circuit; but many of these methods are impracticable for various reasons. The main point to remember is that the smaller the current which is to be broken, the less the tendency for sparking at the key contacts, with a consequent reduction in risk of interference due to key-clicks. A point must be chosen which will not distort the characteristics of the code letters as they will be received by the distant station. When break-in is contemplated—that is to say, when it is desired to " kill " the transmitter under key-up conditions in order to hear any response from the distant station —then it usually becomes necessary to key the oscillator itself (not always easy if good, clean characteristics are to be retained). Several oscillators have been described which will key well and provided this is possible, it is the author's opinion that this is the best stage to key. With an oscillator operating on a band remote from that being used—i.e., where a number of frequency doublers are employed—it is often possible to leave the oscillator running steadily the whole time since its harmonic on the band in use will not be strong enough to cause interference in the station receiver, and to insert the key in one of the doubler stages.

The three main methods usually employed are: Cathode; Grid-block system; and Screen. In Cathode keying the key is inserted in the cathode return to negative H.T. line of the oscillator or one of the low power stages, the key-jack generally being by-passed with a condenser of about ·01 mfd. capacity. Where the anode current of the valve is small this method is usually very effective. Grid block is a system which makes use of an external battery so connected in the grid circuit that when the key is up sufficiently, additional negative bias is applied to the grid to cause cut-off of anode current. In the key down position the valve functions normally and the battery is short circuited through a high resistance. The drain on the battery is very low under these conditions and the method has much to commend it in giving sparkless keying and an opportunity of altering the keying characteristics by the inclusion of a keying filter as an integral part of the system. The same method can be applied to any control or suppressor grid.

Screen grid keying consists simply of breaking the H.T. line to the screen grid of one of the stages, and since screen current is generally of a low value, particularly in a valve of the beam tetrode type, this is also quite a simple and effective method. It has the disadvantage that the key, or at least one side of it, will be at H.T. potential above earth, and care must be taken to guard against the possibility of shock. Fig. 20 illustrates the three methods.

One very important point to remember in amateur transmitting is to avoid interfering with nearby broadcast or television receivers. This is a very wide and complex subject, particularly where television is concerned; but much can be done at the transmitter end by intelligent design before having to consider the fitting of special filters and wave-traps. Most of the points have already been dealt with; but it is as well to enumerate them under this heading of interference:

1. Avoid parasitics or spurious radiations.
2. Suppress harmonic radiation—use link coupling between stages and between P.A. and aerial. Good screening of the different stages.
3. Suppress mains-borne interference by fitting a good mains filter.
4. Avoid key-clicks by (a) keying a circuit carrying only a small current to avoid sparking at key contacts and (b) by fitting a key filter.
5. Avoid a spot frequency whose harmonic will coincide with either sound or vision fundamental frequencies of the television service.

By following these rules the author can operate a 30-watt 80-metre transmitter or a 150-watt 14 m/c. (20-metre) transmitter without causing the slightest interference to a television receiver in a room next to the operating room, and with the two aerials not more than 45 feet apart.

The components required for a suitable key filter as shown in Fig. 21 will vary according to the vagaries of the particular transmitter and the values are best found by actual experiment. Approximate values are given only as a guide. When testing a key filter put the subsequent stages of the transmitter out of action. This enables more effective monitoring in the station receiver to be carried out, so preventing other factors to intrude. Adjust the filter until the keying is clean and just sharp enough, both at make and break, without key clicks or other undesirable features.

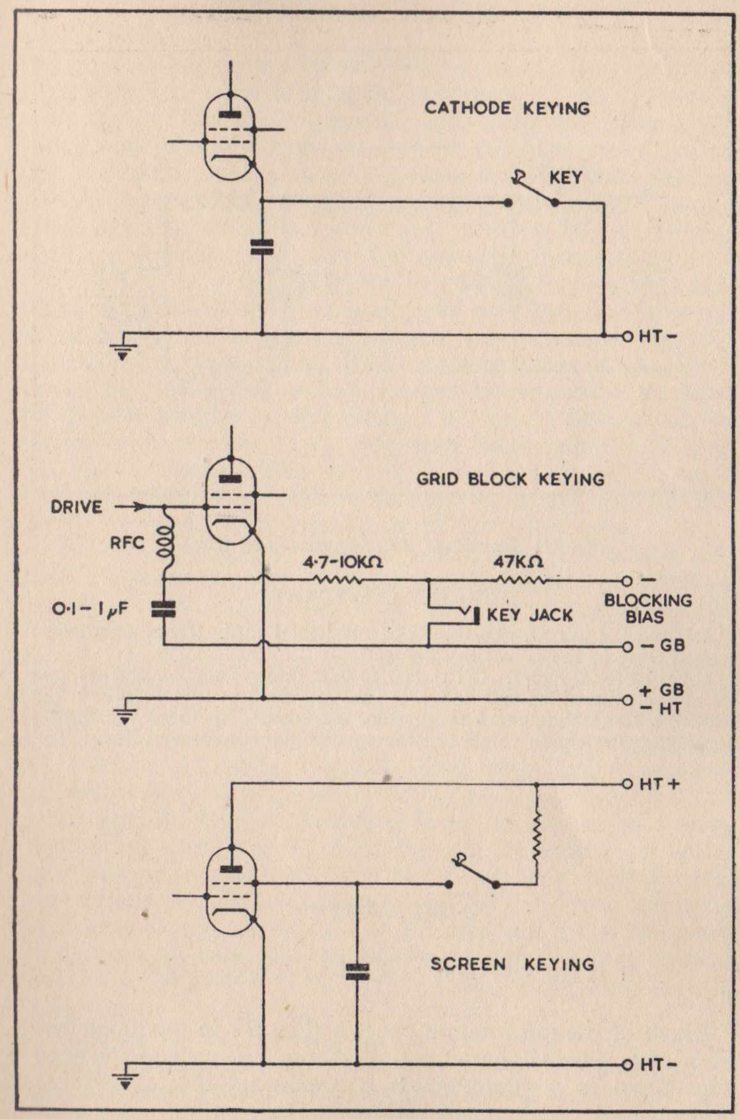

Fig. 20. Keying Systems.

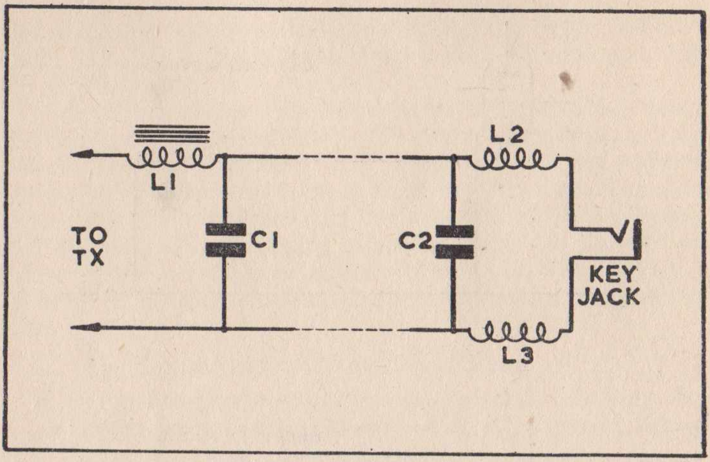

Fig. 21. *Combined R.F. Filter and Lag Circuit.*

CIRCUIT CONSTANTS

L.2 and L.3 are r.f. chokes. C.2 ; ·002 to ·1 mfd. This combination placed close to the actual key contacts.

L.1 ; 10 to 30 henry. C.1 ; 0·05 to 0·25 mfd. This combination can be at the transmitter end and L/C can be varied in inverse proportion until the best keying characteristics are obtained. The lower the current the higher the choke value and the smaller the condenser value.

Chapter Nine

PRACTICAL CONSTRUCTION

Much of the information contained so far in this book has been of a general character and theory has necessarily been kept down to a minimum. It is considered that this is the best method of approach rather than presenting a series of cut-and-dried circuits or systems which must be rigidly adhered to. Only by a clearer understanding of the problems with which he will undoubtedly be confronted can the would-be operator think for himself, and, moreover, obtain the maximum pleasure from his hobby. Amateur radio has no limits; improvisation is ever-present and an understanding of the basic principles will encourage the testing of modifications. Nevertheless, well-tried straightforward circuits must be included and these are now described in detail.

The first is a simple crystal controlled two-valve transmitter which will operate equally well on either the top band, or as a low power job on 3·5 mcs. Fig. 22 shows that the oscillator consists of an EF50 connected up as a Pierce oscillator, employing cathode keying. The crystal is mounted in plug-in sockets so that either a 1·7 or 3·5 crystal can be employed according to the frequency band upon which it is desired to operate. The variable feed condenser C.5 should be of about ·0005 mfd. maximum capacity and the r.f. choke in the EF50 anode can be of any good make.

The power amplifier valve is a Mullard EL33 which will give a maximum output of about 9 watts, which is just within the legal limit for the top band, and yet is quite sufficient to carry out a lot of interesting contacts on the 3·5 band. Grid bias is provided by the cathode resistor. The P.A. tank circuit must be mounted so that the inductance L.1 can be changed to suit either band and placed in a position where the aerial coupling can be applied. The variable condenser C.7 can be any good make of about ·0002 mfd. maximum capacity, but as the circuit is series and not parallel fed the rotor spindle must be insulated from the chassis and from the tuning knob. For 1·7 mcs., the coil diameter must be 4″ diameter wound with 30 turns of No. 14 s.w.g. copper wire, and resonance will be reached with the condenser approximately two-thirds in mesh. For 3·5 mcs. use a coil diameter of $2\frac{7}{8}''$ wound with 24 turns of the same gauge wire, spaced approximately seven turns to the inch. Resonance in this case will be roughly one-third in mesh.

Nothing special is called for in the actual set-up of the equipment except to keep the P.A. anode wiring and associated circuits remote from the grid wiring and circuits. A good, clean lay-out can be chosen with the components well separated and wired together with good, stiff wire. Small components can then be carried on the wiring without extra support.

Although not shown in the diagram it is advisable, as with all crystal oscillators, to incorporate a flash-lamp bulb in series with the crystal. This protects the crystal against fracture through excessive current flowing and indicates when tuning up and operating. It is quite in order for this bulb to glow at low to moderate brilliancy when the set is in oscillation; but if it has a tendency to light brilliantly then too much strain is being placed on the crystal. It would be advisable to try the effect of reducing capacity C.5, and if this is not effective to increase the value of R.2 until a point is reached where sufficient drive to V.2 is obtained without over-driving the crystal. For provisional testing a two- or three-turn loop of heavy gauge wire in series with a flash-lamp bulb attached to the end of a piece of wooden dowelling can be used. With the set switched on and with C.5 set at minimum hold the loop in the vicinity of the P.A. tank coil and tune slowly for resonance. This will be indicated by maximum brilliancy on the lamp. A milliammeter reading 50 m/A. full scale inserted at the point marked X is also an advantage. Resonance is indicated by a sudden dip in the reading. Next, couple up the dummy aerial and check the meter reading to see that the valve is not over-loaded. Then slowly increase C.5 until the desired loading is obtained, checking at the same time that the crystal current is not too high. Finally, remove the dummy load and substitute the aerial or aerial coupling unit, as described previously and readjust the controls for best results. The dip position on the meter should show a loading not exceeding 9 watts which, at 350 volts, will be just over 25 m/A. Be sure to check on the receiver monitor that the sending is clean and sharp. Some crystals are a little sluggish in starting to oscillate and if this

CIRCUIT CONSTANTS FOR FIG. 22

V.1 ; Mullard EF50
V.2 ; Mullard EL33
R.1 ; 47,000 ohms ½ watt
R.2 ; 10,000 ohms 2 watt
R.3 ; R.7 ; 33,000 ohms ½ watt
R.4 ; 15,000 ohms ½ watt
R.5 ; 150 ohms ½ watt
R.6 ; 470 ohms ½ watt
C.1 ; ·001 mfd TCC SMAN
C.5 ; ·0005 mfd do. do.
C.2 ; C.3 ; C.4 } ·01 mfd TCC 543
C.6 ; C.8 ; C.9 }
C.7/L.1 ; see text

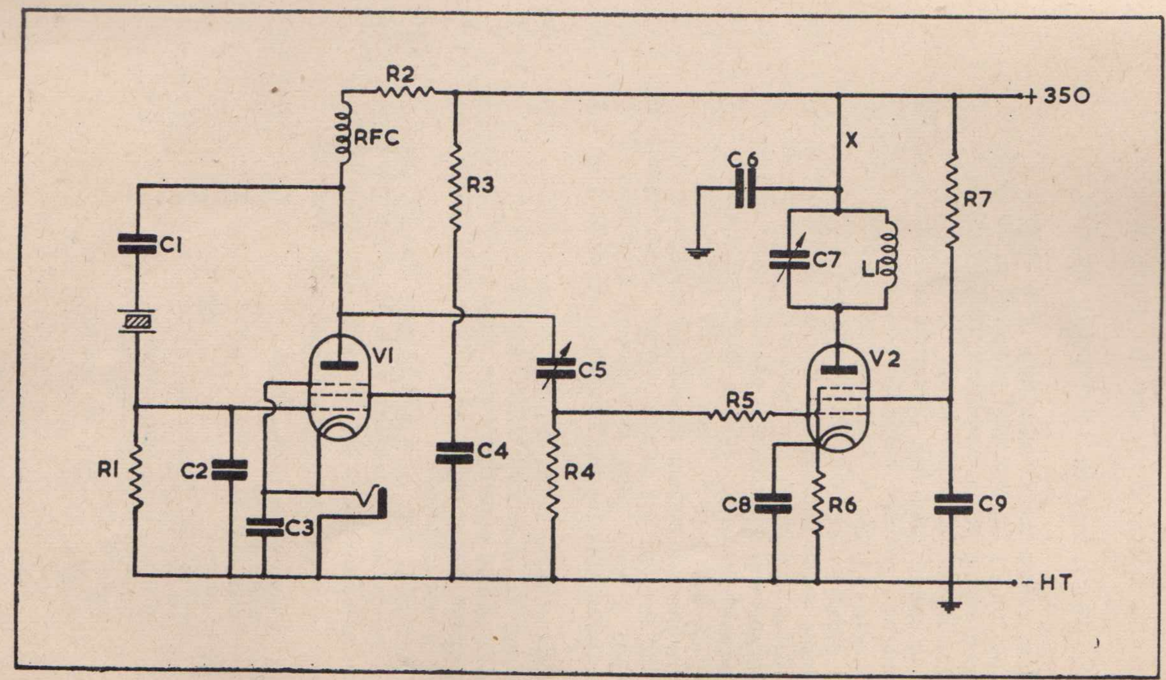

Fig. 22. Crystal controlled 2-valve Transmitter.

is the case it may be necessary to try different values for R.1 and/or C.1.

Next comes the construction of a complete V.F.O. unit for use on its fundamental range of 3,500 to 4,000 kcs. or for controlling power amplifiers working in the harmonically related higher frequency bands through frequency doublers.

The circuit described comprises a Clapp oscillator, followed by a voltage amplifier and a power amplifier, both operating in Class A. It is most advisable to build the entire unit, either with or without its own power pack, into a totally enclosed metal cabinet with internal screening to isolate the oscillator stage from the remainder of the circuit.

Surplus war equipment is plentiful today and there is much to be said for acquiring and modifying a unit known as the TU-5-B, 6-B or 7-B. They can be obtained very reasonably and contain a certain amount of equipment which can be turned to good use in the average " ham " shack, and they include a very good slow-motion condenser drive which does admirably for the frequency adjustment on the oscillator.

One of these cases stripped down will house the oscillator and its associated buffer amplifiers with room to spare, and a skilled constructor can most probably squeeze in the associated power pack and voltage stabiliser (which is desirable if not essential).

Turning to Fig. 23 it will be seen that the oscillator valve is a triode, and in practice virtually any triode seems to behave satisfactorily in this position. The inductance L.1 must

CIRCUIT CONSTANTS FOR FIG. 23

V.1 ;	Any available triode, L63, etc.	R.1 ;	100,000 ohms
V.2 ;	Mullard EF50	R.2 ;	1 megohm
V.3 ;	Mullard EL32	R.3 ;	10,000 ohms
C.1/L.1 ;	see text	R.4 ;	2,200 ohms
C.2 ;	100 pFd pre-set	R.5 ;	220 ohms
C.13 ;	150 pFd variable	R.6 ;	330,000 ohms
L.2 ;	30 turns 14 swg enam. copper spaced 3 inches on 1¾″ diameter former.	R.7 ;	10,000 ohms
		R.8 ;	470 ohms
C.6—9—10—11—12—14 ;	·01 mfd TCC type 543		
C.3—4 ;	·001 mfd TCC type SMAN silver mica		
C.5 ;	·0005 mfd TCC type SMAN silver mica		
C.7—8 ;	50 pFd pre-set trimmers		
RFC ;	Pie wound broadcast pattern		

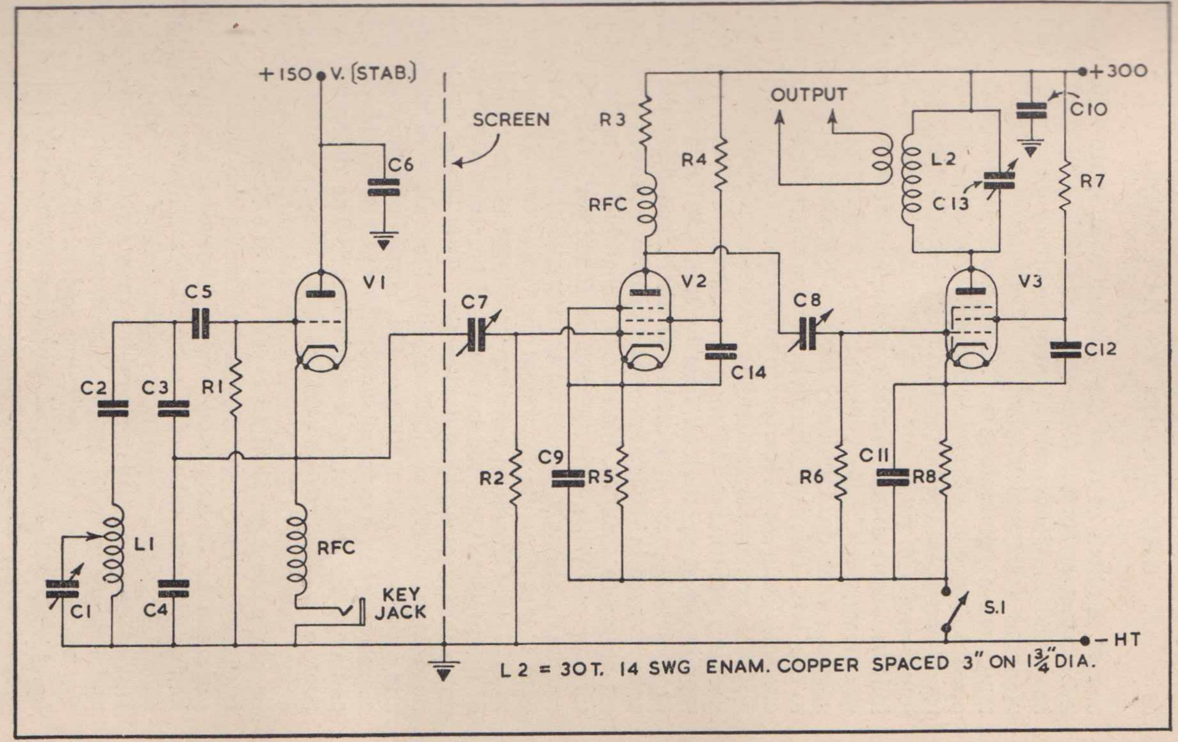

Fig. 23. Complete V.F.O. unit.

consist of about 20 turns heavy gauge wire, space wound on a 2″ diameter former (one of the TU-5-B coils can easily be modified). Condenser C.1 may be of any good make and of about ·0002 mfd. capacity. It will be seen that this is tapped at a point along L.1. The exact point will depend upon the degree of band-spreading required, and having found this point the connection can be permanently soldered into place. The procedure for pre-setting this oscillator is as follows: Insert a milliammeter in the anode circuit; screw the key down; set C.2 to minimum; and, with the tap disconnected, switch on. Gradually increase C.2 until the set starts to oscillate. This is shown by a sudden sharp drop in anode current. Tune the receiver to 3,500 kcs. (use GB1RS on 3,500·25 kcs. which radiates at each hour every evening to find this point). Set C.1 to maximum capacity and run the tapping point up the coil turn by turn until this frequency or something near it is obtained, as indicated by the beat note received in the headphones. If, during this operation, the set ceases to oscillate, increase C.2 slightly and tap down a turn or so. When this position is found and the valve is oscillating strongly, solder on the tap and readjust C.2 until with C.1 at absolute maximum the oscillator tunes dead on to GB1RS. C.2 should not then be altered further and if not of the pre-set type, the knob should be removed to prevent any subsequent accidental alteration. This is the maximum possible band spread position with the values of capacity and inductance given. Re-tune C.1 to minimum position and search through the band on the receiver towards the h.f. end until the beat note is again heard. The difference between this frequency and that of 3,500·25 kcs. represents the actual coverage of the V.F.O. unit. Intermediate points can be plotted and graphed to check that the condenser C.1 is linear with respect to frequency. Finally, the slow motion scale can be directly graduated in kilocycles. Listen to the keying characteristics of the oscillator in the receiver. It should be clean, sharp and steady and of crystal quality. Having got the oscillator working in a satisfactory manner, and bearing in mind that this unit must be screened from the remainder of the apparatus, and wired up very solidly to prevent any mechanical vibrations which might tend to modulate the oscillator note, attention can be turned to the first buffer amplifier. This may consist of a Mullard EF50. The wiring calls for no special comment except to mention the feed from the oscillator is from the cathode via a small pre-set capacity of about 50 pFd. This connecting lead should be as short as possible. The drive from this stage is taken from the anode in the usual way through another pre-set trimmer of similar capacity to the grid of the Mullard EL32 output valve. Cathode resistors provide the bias in each case The tank unit consists of a variable capacity of about 150 pFd across a 30-turn coil, wound with 14 s.w.g. enamelled wire spaced for a length of three inches on a former of 1¾″ diameter. The output from this coil is taken from a six-turn link wound round the tuned inductance at the end connected to the H.T. supply, and this link in turn, is connected to a convenient length of co-axial cable led out through the front panel and terminated by a co-ax. plug. The switch S.1 when opened will effectively isolate the oscillator from the transmitter to which the V.F.O. is connected and its object is to enable the V.F.O. to be adjusted to any desired frequency within its range without the possibility of the excitation reaching the transmitter stage. To adjust the unit set condensers C.7 and C.8 at minimum andplace a milliammeter of 100 m/A. f.s.d. in the positive H.T. supply lead or across S.1 which must then be opened. Connect a six-volt cycle lamp or a one ampere thermo-couple r.f. ammeter across the co-ax. output and tune C.13 for resonance with C.1 set about half-way in mesh. Gradually increase C.7 and then C.8 until a reading is obtained on the meter or the lamp glows with C.13 in resonance. Listen carefully to the keying characteristics in the receiver; but reduce the r.f. gain of this receiver until there is no possibility of it being blocked or over-loaded. There should be absolutely no chirp noticeable with keying and the ammeter should give a dead steady reading of about 50 m/A. If there is any chirp or if the meter needle wavers between key-up and key-down conditions there is probably too much drive, causing one of the buffers to run into grid current. This must be avoided at all costs. The correct setting is therefore one at which maximum output can be obtained as shown by meter or lamp with minimum drive on both stages and complete absence of chirp. A final test with the key down is to make and break the output circuit when listening to the note in the receiver. Only the faintest perceptible alteration in frequency should be detected if the amplifiers are functioning correctly. The output from the set just described is of the order of 2·5 to 3 watts of r.f. and is sufficient to provide ample drive for a 30-watt power amplifier operating on the fundamental frequency. The only controls appearing on the front of the panel are C.1; C.13 (which must be insulated from earth), S.1, a mains switch if the H.T. supply is incorporated; or a socket to take the heater and H.T. leads if otherwise. A refinement is an indicator lamp wired to the filament circuit and, of course, the key-jack, and co-ax. output lead are best brought out to the front panel. The three pre-set condensers, C.2, C7 and C.8, can be mounted inside. Holes may be drilled through the panel to allow for slight final adjustments if desired, and if this is done be sure the rotor of C.8 is connected to the grid of V.3 or else a screwdriver will accidentally earth the H.T. to the metal earthed casing. Incidentally, this design can be used as a V.F.O. transmitter by coupling the co-ax. cable to a suitable 3·5 mc. aerial coupler and a range on the band of several hundred miles is possible at night under quiet conditions.

Finally, consideration can be made of a more ambitious transmitter for operation on four of the five bands.

Unfortunately the question of designing a four-band, band-switched T.X. is beset with difficulties. Switching r.f. at high frequencies can produce excessive losses and it is usually better and far simpler to take a few moments longer over changing bands. Furthermore, the higher the frequency the longer the chain of frequency doublers, and it is obviously uneconomic to use relatively expensive power valves for the dual purpose of frequency doubler and power amplifier. The lay-out now suggested is a good compromise, and consists of a three-band exciter unit and a separate power amplifier with plug-in tuning units for grid and anode. Each section of the unit can be plugged in either to its neighbouring frequency doubler or direct to the P.A. input according to the frequency band desired. The second doubler can also be operated as a tri-tet crystal oscillator with a 7 mc. crystal and provision is made for keying this stage so that crystal control can be utilised on the final or 28 mc. band for stability, and on the 14 mc. band if required. The power amplifier selected is the Mullard QQVO7-40, which is a double tetrode, operating in push-pull. Although this valve is capable of handling nearly five times the 25-watt power limit imposed on new licence holders it can be run comfortably within the limit by reducing the amount of excitation, yet at the same time it is ready to handle the higher power as soon as permission has been granted.

With link coupling between stages and co-axial feeders the method of operation on the different bands is then as follows:

3·5 mc. Band.—Fit 3·5 mc. tuning units to the P.A. and plug in the V.F.O. The output of the P.A. to the 3·5 mc. setting on the 3·5/7·0 mc. antenna coupler.

7·0 mc. Band.—Fit 7·0 mc. tuning units to the P.A.; plug the V.F.O. output into the first exciter section, the output of which is plugged to the P.A. Switch the 3·5/7·0 mc. antenna coupler over to the 7·0 mc. position.

14·0 mc. Band.—Fit 14·0 mc. tuning units to the P.A.; plug the output of the first exciter section into the second section, switch this unit to the V.F.O. position; plug the output into the P.A. and transfer the P.A. output to the second antenna coupler, set for 14 mc. working. Key either the V.F.O. or second exciter. Alternatively, switch off the V.F.O. and switch off and unplug the first exciter; switch the second unit to crystal position and key this stage.

28·0 mc. Band.—Fit 28 mc. tuning units to the P.A.; plug the second exciter into the third, the output from which is then plugged to the P.A. Change the antenna coupler to the 28 mc. position and key the second exciter.

Tuning up follows usual practice and should be taken step by step. If the V.F.O. is pre-set to the middle of the desired range of frequency, the subsequent circuits can be brought into resonance one by one and the drives adjusted to the requisite value. Subsequent use of the V.F.O. for a reasonable excursion on either side of the initial frequency should not require major adjustment to any of the subsequent controls. For this reason meter jacks only are fitted in both grid and anode leads of the three exciter/doublers so that two meters will serve for initial adjustments and for checking any subsequent alterations. The P.A. anode, of course, has its own meter permanently installed as a check on the input to this final stage and is visible at all times.

The choice of lay-out is left to the constructor, but the design lends itself very readily to rack and panel construction with the three exciters one above the other with the P.A. unit at the top, and in this case heater and supply leads can be taken up at the back of the rack and each unit can be made to plug in, so that it may be readily withdrawn at any time for overhaul. The co-ax. feeders should be cut to a length just comfortably sufficient for the coverage required with the respective sockets being panel mounted on the front of each unit so that plug switching can be achieved within a few seconds. The power pack can be built in at the bottom of the rack, thus completing a very compact and neat lay-out which takes up very little horizontal space.

Fig. 24 illustrates the three-band exciter unit utilising Mullard EL32 valves in all three stages. With careful attention to lay-out and disposition of components, neutralising should not be necessary; but if parasitics are encountered the offending stages can generally be stabilised by small resistors right at the grid tag on the valve holder; 470 ohms is a convenient value. The respective H.T. and filament switches for each stage can be ganged by using small D.P.D.T. toggle switches. S.7 for changing from V.F.O. to crystal should preferably be of the ceramic wafer type. The standing current shown on the meter when plugged into one of the jacks J.4 to J.6 should be between 30 and 35 m/A. per stage. Some provision should be made for varying the coupling between anode and link coils and once the desired

CIRCUIT CONSTANTS FOR FIG. 24

V.1—2—3 ; Mullard EL32
R.1—4—5 ; 100,000 ohms
R.2—3—9 ; 470 ohms
R.6—7-8 ; 10.000 ohms
C.1—3 ; 150 pFd trimmers
C.2—4—5—6 ; 100 pFd trimmers
C.7 ; 50 pFd trimmers
C.8—9—10 }
C.11—12—13 } ·01 mfd TCC CP45w
C.14—15—16 }
C.17 ; 500 pFd TCC CM20N
C.18 ; 200 pFd TCC CM20N

L.2 ; 30 turns 1½″ dia. × 1″ 22swg
L.3 ; 18 turns 1½″ dia. × 1¼″ ,,
L.5 ; 12 turns 1½″ dia. × 1″ ,,
L.7 ; 12 turns 1½″ dia. × 1″ ,,
L.8 ; 9 turns 1½″ dia. × 2″ 14swg
L.11 ; 8 turns 1½″ dia. × 1″ ,,
L.12 ; 6 turns 1½″ dia. × 2″ ,,
L.1 ; 6 turns 14 swg
L.4—6 ; 4 turns ,,
L.9—10 ; 3 turns ,,
L.13 ; 2 turns ,,
RFC ; 2·5 mH.

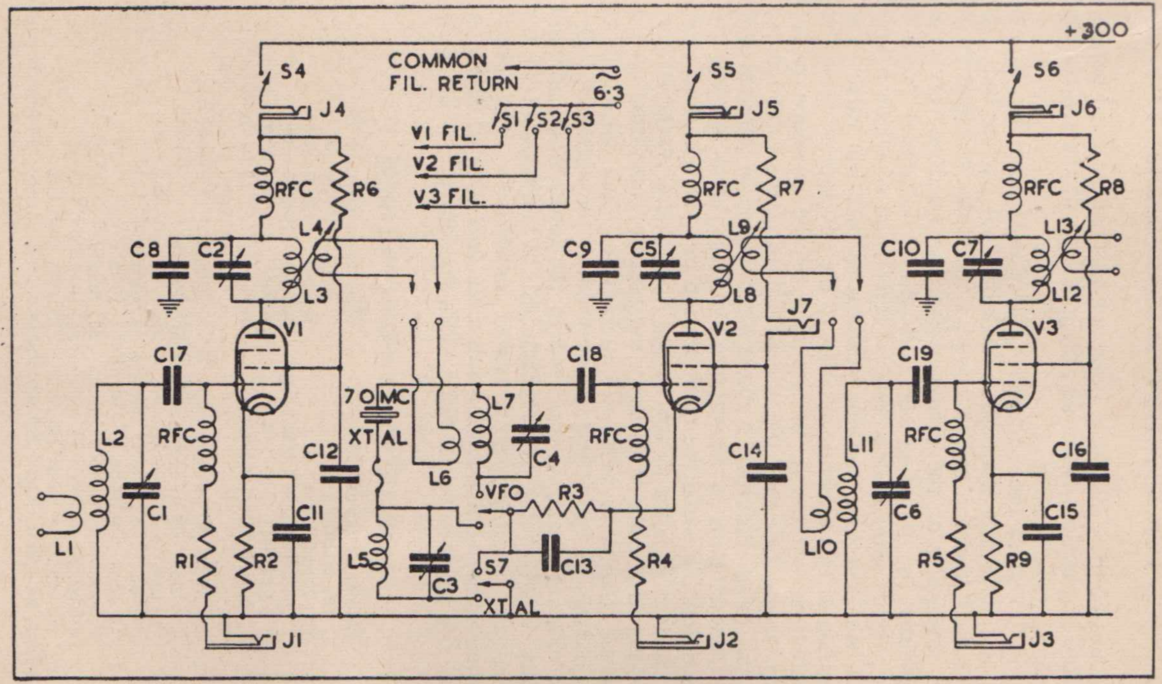

Fig. 24. Three-band Exciter Unit.

amount of drive has been obtained, this can be fixed permanently in position. Naturally, all jacks are of the self-closing type.

Fig. 25 gives the circuit for the Power amplifier. Again lay-out is largely a question of individual choice, but it is suggested that the anode circuit is carefully screened from the remainder of the circuit, which can be done very conveniently by mounting the valve in a horizontal position (i.e., on its side) with a vertical screen out of which a hole has been cut in a suitable position to take the valve. The position of this screen in relation to the envelope of the valve should be just above the junction of the envelope to the base, to coincide with the internal screen of the valve located at this point. Provision is made for plugging in different grid and anode coils in accordance with the band selected for operation. To avoid the complication and the additional cost of having to change the tuning condensers, variable condensers of a suitable capacity are used for operation on the highest frequency band—28 megacycles—and mica padder condensers of values suitable to produce the necessary " Q " for efficient operation are used in the lower frequency coil units. Final tuning is accomplished by adjustment of the relatively small capacity tuning condensers. The anode milliammeter should have a full scale deflection of 300 m/A. and the inductance in series with the meter is a 2·5 m.H.

CIRCUIT CONSTANTS FOR FIG. 25

V.1 ;	Mullard QQVO7-40	C.8—11 ;	·01 mfd TCC CP45w
C.1—2 ;	see coil data	C.9—10 ;	·005 mfd TCC CP45w
C.3 ;	50 pFd variable	R.1—2 ;	3,900 ohms
C.4 ;	25 pFd variable 1,000 v.wg.	R.3 ;	10,000 ohms
C.5—6 ;	50 pFd TCC M2U	R.4 ;	100 ohms 3 w.
C.7 ;	·001 mfd TCC CP49 w	RFC.1—2 ;	12 turns 20 swg enam. ⅜″ dia. spaced.

L.1 ;	3·5 m.c.	30 turns	1½″ dia.	× 1½″ long	C.1 = 500 pFd.
	7·0 m.c.	20 turns	1½″ dia.	× 1½″ long	C.1 = 20 pFd.
	14·0 m.c.	12 turns	1½″ dia.	× 1½″ long	omit C.1
	28·0 m.c.	6 turns	1½″ dia.	× 1½″ long	omit C.1
L.2 ;	3·5 m.c.	30 turns	2½″ dia.	× 4½″ long	C.2 = 50 pFd.
	7·0 m.c.	20 turns	2½″ dia.	× 3¼″ long	C.2 = 15 pFd.
	14·0 m.c.	12 turns	2½″ dia.	× 3¼″ long	omit C.2
	28·0 m.c.	6 turns	2½″ dia.	× 2¼″ long	omit C.2

C.2 must be 1,000 v.wg. ; 3·5 and 7·0 m.c. coils 22 swg ; 14 and 28 m.c. coils 14 swg.

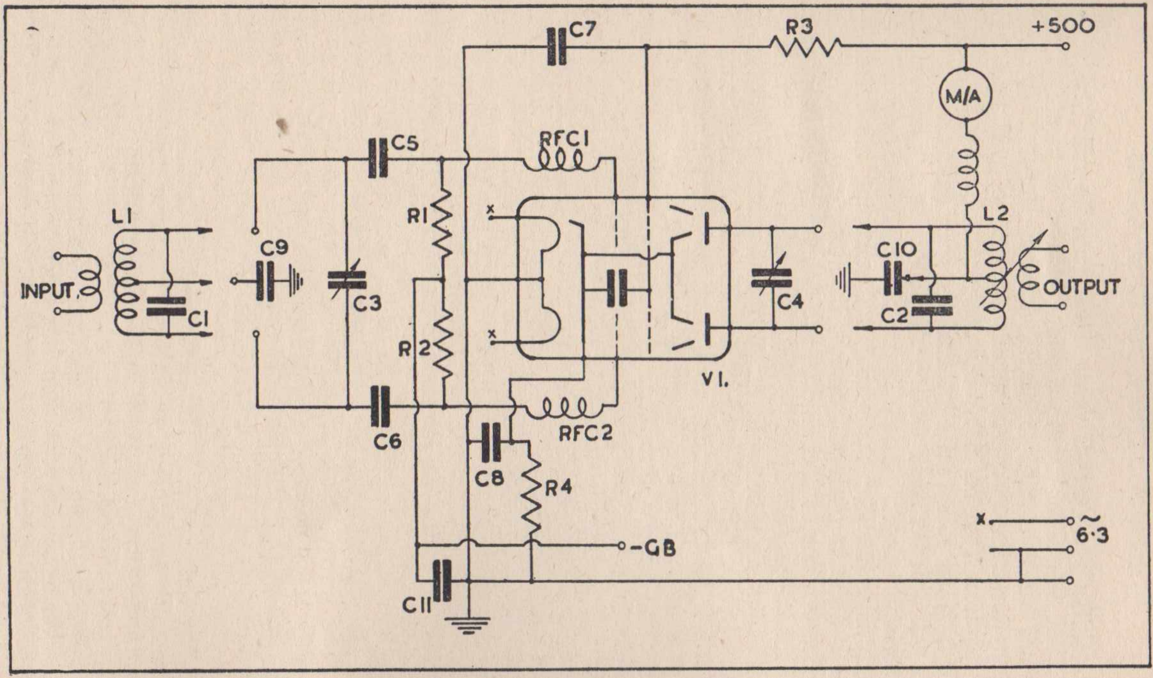

Fig. 25. *Power Amplifier using QQVO7-40.*

choke. The QQVO7-40 valve shown can be run 12·6 volts at 2·125 amps. or by paralleling the two filaments at the normal 6·3 volts at 2·25 amps., in which form it is wired up in this circuit. Approximately 20 volts of grid bias will be required from an external battery source.

Tuning up follows the general lines, including the provision for a lower high tension supply to be applied in the provisional stages. Should it be necessary to neutralise—which is unlikely if the wiring and screening are correct—this is done in push-pull circuits by fitting two neutralising condensers, one to each anode, and connecting the other side of each condenser to the *opposite* grid lead. A 0-10 milliammeter fitted in series with the grid bias would go hard over when driving this valve to its maximum, the limit being 15 m/A. for the two sections combined; but for the purpose of its present use 3 or 4 m/A. should be ample drive. If too much is shown, it may be reduced by backing off the drive from the previous stage or by stepping up the grid bias to a higher value. It is stressed that this valve will greatly exceed the provisional limit of 25 watts imposed by the G.P.O. and it is of great importance to ensure that this it not exceeded when the equipment is connected to the aerial system. At the same time the valve will be of great use at a later stage when higher powers are permissible. It is also capable of efficient operation on frequencies as high as 250 m/cs.

Chapter Ten

IN CONCLUSION

What little space is now left must be devoted to a few comments on general operating technique and break-in operation. Always make it an inviolable rule to listen carefully on the frequency you intend to radiate before you actually go on the air. At the end of a transmission listen again on or about your own frequency to be sure you are not being called by another station. If you must send " CQ " —and for a G station this is seldom the way to achieve

" DX "—then make it short. Three times three is a good rule; send steadily and deliberately, repeating your call sign four times instead of three at the last before adding the symbols AR K. When using the V.F.O. with intent to call a distant station, immediately you obtain his call sign and the information that he is seeking, a fresh contact (he may call CQ or QRZ), cut your V.F.O. buffer amplifiers, depress your key and tune your V.F.O. until your own signal beats with the distant one. Then *de-tune* the V.F.O. to one side or the other until you can just hear your own signal; lift the key, switch on your buffer amplifier and wait until he goes over. Give him a short call along the lines already indicated and if you are working break-in, be content with a very short call followed by the group BK; pause a moment to see if he comes back; if not, repeat the call and procedure. By so doing you will soon hear whether he comes back to you or to another station and in the latter case you will cause the minimum amount of interference to your fortunate rival. *Never* butt in on an uncompleted QSO and *never* swing your V.F.O. around with power on; this *is* done unfortunately, but more is lost than gained by so doing. Keep your temper; remember your manners and behave on the air as you would wish others to behave to you. If you are very new to the game don't be afraid to ask. The amateur as a class will gladly help you on your way.

Lastly, the question of break-in. This, as its name implies, is the ability to listen to the distant station the whole time you are transmitting. In actual practice with the modern tendency to operate on almost the same frequency—or what is virtually single-channel working—this presents great difficulties and by far the majority of amateurs are content with being able to listen with the key-up and to rely on pauses in their own transmission to learn if the distant station is breaking in on him. This presents considerable complications if only one aerial is available and the various ingenious relay systems devised would take up a great deal more space than is left. The easiest way out is to install a separate receiving aerial, even if it is considerably less favourably placed than the main array, and couple it permanently to the receiver. At the same time when higher powers are contemplated it does not improve the average receiver when it is tuned dead on to a 150-watt transmitter located in the immediate vicinity. Therefore it is advisable to devise some means of protecting the receiver when the key is down. This can be done very successfully by fitting a spare pair of back contacts to the key, insulated from the body of the key itself. A potentiometer of suitable value is connected across these contacts and the whole arrangement wired up in series with the H.T. supply to the r.f. stages of the receiver. Thus, as the key is depressed and before the transmitter actually starts to radiate, the r.f. stages of the receiver are deprived of a portion of their normal H.T. supply and effectively " muted."

The degree of " muting " can be controlled by the potentiometer until (if you are listening on your own frequency, or within audio range of it) you can tone down your own signal to a level commensurate with the strength of the incoming signals with the receiver operating in its normal manner. Besides protecting the receiver from damage, this is far more pleasant to the ears.

There are many more subjects which could be touched upon, but space is now at an end, so it only remains for the author to wish every reader: " Good hunting and good DX," and to express the hope that some of the information at least, will have proved useful and interesting.

"The book should be extremely useful . . ."
—*WIRELESS WORLD*

INTERNATIONAL RADIO TUBE ENCYCLOPÆDIA

edited by Bernard B. Babani

This Encyclopædia gives the operating characteristics and base connections of some 15,000 valves made throughout the world by approximately 164 manufacturers and includes all the Military Naval and Service types of many countries produced during the war.

There are 11 Sections: Receiving tubes of all classes; Transmitting Triodes; Transmitting Tetrodes, Pentodes, etc.; Current Rectifier Values; Thyratrons; Voltage and Current Regulators; Tuning Indicators; Cathode Ray Tubes (including Television Tubes and Orthicons, etc.); Photo Tubes and Photo Cells; Rare Tubes and their equivalents; Supplementary data.

As practically all the world's valves are given, the technical matter and instructions for using the tables have been translated by native technicians into **FRENCH, GERMAN, SPANISH, ITALIAN, PORTUGUESE, DUTCH, SWEDISH, DANISH, NORWEGIAN, RUSSIAN, POLISH, CZECH, TURKISH and MODERN HEBREW,** which are bound into the one volume with the English data and tables.

- *Includes thousands more valves than any other similar publication.*
- *Annual supplements will be issued to keep it up to date.*
- *Valve base connections are on the same page as characteristics.*
- *Many valves not due for production until 1951 are included.*

10" × 7½" full cloth bound 496 pages 42/- net

Send for prospectus

BERNARDS (PUBLISHERS) LTD.