BBC ENGINEERING

Number 100 June 1975

Number 100 June 1975

BBC Engineering

including Engineering Division Monographs

A record of BBC technical experience and developments
in radio and television broadcasting

Contents

Published approximately four times per year by
BBC Publications,
35 Marylebone High Street,
London W1M 4AA
ISBN 0 563 12894 1

Edited by
BBC Engineering Information Department,
Broadcasting House,
London W1A 1AA

Printed by
The Broadwater Press Ltd,
Welwyn Garden City,
Herts.

Price
40p or $1.00 per issue post free
Annual Subscription
£1·50 or $4.00 for 4 issues post free

The cover photograph shows Road traffic information service model.

The major contributions are preceded by individual lists of contents.

Editorial

Traffic Information for the Motorist

For some time now the techniques of giving the car driver information to help him with his journey have been under examination by various authorities. In the past, road-side notices and signals have been the principal means, although broadcast announcements have become a valuable supplement. For many years, the BBC has transmitted traffic announcements in its national programmes and the recent introduction of local radio has meant that, in areas receiving this service, detailed local data are also available. However, many non-motoring listeners regard such announcements as an intrusion. There must, therefore, be a limit to the amount of traffic information which is incorporated in existing programmes. In certain populous areas where traffic density is high the number of announcements which the authorities would wish to transmit is already well above a reasonable limit. The BBC offers a wide choice of programme material and it is unreasonable to demand that the motorist be restricted to only one programme. Thus, to be effective, the traffic information would have to be duplicated on all programmes.

It would seem that if a useful improvement is to be made to present arrangements a dedicated motoring service should be established dealing only with the transmission of traffic announcements. With this objective the BBC Research Department has proposed a scheme involving a network of about seventy low-power medium-frequency transmitters, each of which would have a service radius of about 30 kilometres. This network would operate on a single frequency and interference between stations would be avoided by ensuring that those within mutual interfering range do not operate simultaneously, i.e. a time division multiplex mode of transmission would be employed. The equipment for the car would consist of a simple receiver costing perhaps £7, and tuning would not be required. A muting circuit in the receiver would ensure that transmissions from adjacent stations would not be heard until a certain threshold value of field strength was exceeded. Thus, the motorist would receive information relevant only to the area through which he was passing. The network of transmitters could operate either in a time sequence or be switched as required from control centres.

The development of the proposal has required analysis of traffic statistics, a subject which is well outside the normal scope of the activities of BBC Research Department. Co-operation received from the BBC's Motoring Unit has, however, allowed this analysis to be successfully completed. We should also like to acknowledge the many useful discussions which have been held with staff of the Traffic and Road Research Laboratory (Department of the Environment), with various police forces and other bodies.

The BBC proposal is being examined by the European Broadcasting Union which is investigating the possibility of finding a system suitable for use throughout Europe. Whatever may be the fate of the proposal, the analysis involved in its preparation has resulted in a fuller understanding of the requirements for such a service. This will help to identify the contribution that broadcasting can make.

The article which begins opposite contains a detailed description of the BBC proposal.

A Traffic Information Service Employing Time Division Multiplex Transmission

R. S. Sandell, C.Eng., M.I.E.E.

M. W. Harman, C.Eng., M.I.E.R.E.

Research Department

Summary: The use of broadcasting to provide traffic and road information to motorists continues to be developed, but there remain several problems. It would seem that a real improvement could be realised if it were possible to provide the driver with a service dedicated to his needs, but which would not overwhelm him with irrelevant data. The shortage of frequencies and other problems complicate the provision of such a system, but investigation suggests that a solution is possible if time-division-multiplex operation is used in the transmission of the announcements. A network of low-power transmitters, each having a range of about 30 km, could operate on a single frequency, co-channel interference being avoided by ensuring that simultaneous transmission by stations within range of each other was prohibited. Thus, each station would only transmit for short periods, during which it would radiate local traffic announcements.

The use of a single frequency means that the car receiver could be of simple design. It would not require tuning by the driver. To ensure that only information from the local station was received, a muting circuit in the receiver would operate at a pre-set field strength level, so that when the car had moved beyond the range of a particular station, it would no longer receive information from that source.

The feasibility of the proposal depends upon several factors, some of which are beyond the scope of work normally undertaken in connection with broadcast research. The work so far carried out is described in the article and the need for further studies is discussed.

1 Introduction

Broadcasting is one way of providing the motorist with traffic information, and for many years the BBC has included traffic announcements in its national programmes. Recently an additional outlet for this purpose has been realised by the introduction of local radio, which provides motorists in the area served by these stations with local information. However, despite considerable dedication and effort by those concerned the present methods are not completely satisfactory. Reasons for this include:

(i) The majority of listeners are not immediately concerned with motoring, and can be annoyed by traffic announcements.
(ii) Motorists may be compelled to listen to a particular programme in the hope of receiving useful information.
(iii) There is no clear indication to the motorist which channel may be the best source of information.
(iv) Programme authorities do not always welcome the intrusion of traffic announcements.
(v) To avoid overloading the programme only a fraction of the information available can be transmitted in some busy areas.
(vi) The number of motorists reached is comparatively small (at peak rush hours about 300,000 drivers may be listening to the appropriate programmes – representing about 15 per cent of those on the roads).
(vii) The chance of a particular motorist hearing relevant information is remote.
(viii) In the absence of nationwide machinery the value of the

service often depends upon local arrangements, thus the standard varies across the country.

If any new proposal is to succeed the problems outlined above must be reduced. Furthermore, it must be recognised that within the space of the next decade other non-broadcasting techniques for communicating with the motorist may come into operation. Thus it is important that the contribution that can be made by broadcasting should be established as soon as possible in order to avoid wasteful duplication.

A system developed in West Germany* uses a network of transmitters in the Band II broadcasting band (nominally 87·5–104 MHz in West Germany but currently 88·1–97·4 MHz in the UK) to provide the service. Traffic announcements are transmitted by frequency modulation of the main carrier in the usual way, and a subcarrier is used to carry various identification signals. This system has disadvantages, not least being the need to set aside for the traffic service a band of frequencies sufficient to carry a programme with national coverage – e.g. BBC *Radio 2*, *Radio 3* or *Radio 4*.

This article describes an alternative proposal for a new service that would carry only traffic information, would operate on a single frequency and would require little effort and minimum expenditure on the part of the motorist.

The article is divided into five main parts. Following a brief outline, the second section deals with the programme requirements, i.e. the input of traffic information. The third describes proposals for the transmitter network and discusses methods of operation. The fourth section deals with the receiver, and the article concludes with a general discussion.

2 Outline of the proposal

In addition to recognising the problems in the present arrangements, other important objectives were borne in mind in preparing the proposal. Firstly, it was felt that any system must be cheap, both for the transmitting authority and for the motorist. Secondly it was considered important to ensure that the system should require the minimum action on the part of the driver to receive the messages. It was also clearly important that any new equipment needed in the car should not interfere with any existing radio receiver (apart from the period when traffic announcements were being made). Finally, reception quality would have to be adequate for speech communication.

Consideration of many of the problems led to one inevitable conclusion: the only satisfactory solution required a dedicated service, i.e. a channel devoted solely to the transmission of traffic information. If traffic information is inserted into a normal programme it may have to wait for a gap unless it is regarded as very urgent; indeed, even when it is transmitted it could be missed by a driver whose attentions are elsewhere. A dedicated service – essentially a distinct and separate programme – also offers the advantage of setting up new and efficient machinery for dealing with the reporting and processing of data on a nationwide scale, an important deficiency at the moment. Nevertheless a dedicated service must not be a continuous stream of instructions, which would soon overwhelm the majority of drivers. This state of affairs may be avoided by ensuring that the information received at any one point relates only to a sufficiently small area, so that announcements are not too frequent. Moreover, each announcement is most likely to be relevant to the needs of a particular motorist if it relates to a small area in his vicinity.

An immediate obstacle to the introduction of any new broadcasting programme is, of course, the shortage of frequencies. In the case of traffic information, however, as mentioned above, a continuous output is unlikely provided the area covered by a particular source is small. Thus it is possible to plan in terms of the sequential use of a frequency, i.e. time division multiplex (TDM). Using this approach, substantial area coverage of the United Kingdom can be achieved using about seventy low-power transmitters, each having a service range of about 30 km. Employing a single frequency, each would be allowed a short operating period to transmit its local information, and mutual interference would be avoided by ensuring that stations within interfering range of each other did not operate simultaneously. Such a system could be operated automatically, observing a pre-determined sequence, or announcements could be directed to specific transmitters selected by traffic control centres.

The receiver need only be a simple fixed-frequency device. Although information from adjacent service areas would be useful in certain cases, a limit would be imposed. To achieve this a mute in the receiver would operate at a pre-set field strength to ensure that information from only the local station, or possibly an adjacent station, would be heard.

3 The programme requirements

3.1 General

Usually the programme material which is to be transmitted on a network is only of passing interest to the engineer planning the technical characteristics of the stations which will transmit the service. The type of modulation will influence the protection ratios, but the planning assumes continuous operation of the stations. For a TDM network, however, the operating periods are of vital importance to the planning engineer who must be aware of the full requirements. Thus, in this case, it has been necessary to assess both the type and quantity of traffic information which must be handled. This has not been easy (for reasons which are given later), and it is accepted that expert advice – which hopefully will be forthcoming – may result in modifications to the proposals. However, it is hoped that this intrusion by amateurs in the field of traffic information will ultimately lead to a feasible solution which will meet the requirements.

At the beginning of the investigation approaches were made to various police forces and committees, to the Transport and Road Research Laboratory, to certain Universities dealing with traffic studies, and to the BBC's own motoring specialists. Many of the responses were helpful, but because the facilities provided by the BBC proposal were new, the type of information required to satisfy certain queries had never been established. It was therefore decided to obtain the required information by analysing data supplied by the BBC Motoring Unit. These data, mainly derived from police sources, identify the day-to-day incidents which occur on roads within the United Kingdom. However, it was recognised that the information was biased and incomplete. Firstly, the police only

---

* Rundfunktechnische Mitteilungen, Vol. 18 (1974), No. 4, pp. 185–192, by Rolf Netzband and Ernst Jürgen Mielke.

pass that information which they think the BBC can handle under present conditions. Secondly, the information relates mainly to rush hours and to certain types of road, so that conditions at other times and in other places are difficult to assess. Nevertheless, the use of other published reports on traffic statistics together with estimates about the amount of additional data which could usefully be transmitted have allowed forecasts to be made.

It is emphasised that only a small part of the work so far carried out is reported here. At this stage the main concern has been to investigate the feasibility and usefulness of the proposal. If this proposal is accepted further work will be required, and it is believed that the preliminary work will provide a very useful basis.

3.2 The nature of traffic information

For some time now it has been the practice to divide traffic information under two main headings – strategic and tactical. These describe respectively, predictable conditions causing delay, and emergencies such as accidents which could result in both delay and more serious complications. The terms are not completely satisfactory, in that they are not exclusive, but the important factor which separates them is time. The predictable effects of strategic information often allow some time to elapse before communication with the motorist becomes necessary. For this reason it is possible to put strategic announcements into a scheduled programme. On the other hand, tactical information is often very urgent and no delay can be tolerated. Here it must be observed that even if instant communication with the motorist is possible from some control centre, some time will inevitably elapse before the incident is reported to that centre. At present, and for the foreseeable future, the 'reporting' time is a variable factor, but obviously it is important when considering the value of any transmission system. Fortunately, the great majority of information which would need to be handled by a broadcasting system does not present the unhappy choice between instant communication or a serious accident. Whether or not the few that do could ever be usefully handled by a system such as that now proposed will largely depend on the reporting system which would have to be built up.

The effects of various types of traffic incidents, and hence the value of information describing these, can be assessed. Factors which influence the number of traffic incidents, and their seriousness once created, include:

(*a*) Density of traffic
(*b*) Type of road, width, etc.
(*c*) Type of urban development
(*d*) Weather
(*e*) Time of day
(*f*) Time of year
(*g*) Type of traffic
(*h*) Speed of traffic
(*i*) Local events
(*j*) Traffic control systems

It is quite feasible to predict the effects of many of the factors in this list and to devise a dynamic traffic control system which will minimise the effect of any incidents. Indeed the Metropolitan Police, for example, operate a computer-controlled system which does this very efficiently, but what is lacking is a means of passing information to the motorist in order to keep him informed and to secure his co-operation. In pursuing a plan for traffic information broadcasting, therefore, it is seen as a component of an overall system. It is important to ensure its full integration with other techniques which are being or will be used to smooth the traffic flow.

3.3 Analysis of BBC traffic information

The primary objective was to estimate the amount of programme time which would be required to provide a full motoring service. Clearly the amount of information will depend on the area covered, and initially the investigation was concentrated on the situation in South-East England. At present, traffic information is transmitted on the national networks Radios 1, 2 and 4, and by local radio stations. Because the data were available in an assimilable form, information from the central Motoring Unit only was eventually used for the detailed analyses, but the contribution made by local radio is also very important and this was taken into account. Appendix 1 gives some information regarding the output of three of these stations in South-East England.

The Motoring Unit handles many thousands of national announcements per annum. Appendix 2 shows a listing of the announcements for a summer month (July 1974), revealing an average daily rate of about thirty.

As mentioned above, it was decided to concentrate the preliminary study upon South-East England. It was felt that as well as providing adequate evidence for the main investigation, the study should also allow the application of the German proposal to be tested. For this reason the situation inside the service area of the Wrotham Band II station is being analysed. This area is shown in Fig. 1. It covers the busy Metropolitan area, and the road census results for 1972 shows that it embraces about 28 per cent of the total road traffic of the United Kingdom. It contains about 10000km of roads, classified as follows:

Motorways	285km
Dual-carriageway main roads	550km
Single-carriageway main roads	5800km
Secondary roads	3500km

The statistics of the Motoring Unit's announcements, together with other information, are still being studied, but so far the following facts have emerged.

(i) Over a period of seventy days, scattered throughout the year, the number of daily announcements averaged twenty. These included some repeats, but weather forecasts are excluded.
(ii) The average duration of each announcement was 16sec. More than 99 per cent of the announcements would have been completed if a period of 30sec. had been allowed to each.
(iii) The ratio of strategic to tactical announcements was 2:1.

From this basic information and ignoring other factors it will be seen that the broadcasting time required for the present service, if it were confined to a single channel would amount to not more than 10 min. per day. If local weather forecasts are included, then the maximum time needed might amount to 15 or 20min. However, there are two other factors which

Topographical information based upon the Ordnance Survey map with the sanction of the Controller of H.M. Stationery Office "Crown Copyright Reserved"

Fig. 1 Approximate limits of the area within which the Wrotham Band II service is used

must be taken into account. Firstly, as has already been mentioned, the present service only broadcasts a part of the information which probably should be transmitted, if facilities were available. Estimates from the police and from the BBC suggest that about 75 per cent of the incidents are not announced, either because time cannot be found for them or because the present arrangements are inappropriate. Secondly, there is a considerable amount of data which has not yet been analysed, which is transmitted by the local radio stations in the area (London, Oxford, Medway, Brighton and Solent). The daily output of traffic information from some of these stations amounts to nearly one hour of broadcasting time each.

An additional complication which must be taken into account is the rate at which announcements need to be made. This is variable; Fig. 2 shows the number of traffic announcements passing through Motoring Unit for a period of thirty days, plotted as a function of time of day. This does not illustrate the actual occurrence of incidents, firstly because some programmes transmit more traffic information than others, and secondly because much of the strategic information arrives early in the day. However, it does confirm that frequently about one-fifth of the traffic announcements for the day materialise between 0800 and 0900.

From the evidence so far studied, it would seem that if a full service for motorists had to be provided from the Wrotham station to the present service area limits, then allowance would have to be made for between 300 and 400 announcements per day. This would require between one and a half and three hours of broadcasting time on a single programme. At busy periods, in order to avoid delay, it would be necessary to overlap into a second programme.

It can rightly be argued that the Wrotham area is not representative, because alone it embraces more than a quarter of the nation's traffic. This is true, but if any new system were to be introduced, then certainly it must be capable of meeting the load presented in South-East England. Furthermore, the traffic problems elsewhere in the UK can be just as severe, although the concentration is lower. In large service areas, such as that produced by the Holme Moss station, the likely demand on broadcasting time could certainly equal that at Wrotham during certain periods. Although the percentage of UK traffic in the Holme Moss area is only 1 per cent (compared with 28 per cent in Wrotham), many major towns are covered, and the peak demand would be considerable.

It should be noted at this point that in the foregoing only local information has been considered. There would, in addition, be some generally strategic announcements of national interest for long-distance drivers, but it is assumed that these could be handled in scheduled programmes on a national network.

Clearly, the load estimated above would be too much both for the programme authorities, and for the motorist. Even if it could all be transmitted, the motorist could not possibly absorb such an output. Furthermore, although it is referred to as local, it is only local in the context of the service area. If the latter is large, then much of the information would still be irrelevant to particular motorists. This problem can be overcome by reducing the size of the service areas, and by allowing local information to be inserted at each station. In this respect local radio can offer real advantages. The TDM proposal offers still greater benefits, and these can be seen by comparing the Wrotham situation with a TDM network for South-East England.

Eight TDM stations would be needed to cover the area, although a smaller number would result if there was freedom in site selection (at this stage it has been assumed that for reasons of economy in both implementation time and expenditure existing BBC sites could be used). Using the data resulting from the analysis of the seventy days' output from the Motoring Unit, the daily number of announcements which might have to be dealt with by each station is shown in Table 1.

TABLE 1

Station	*Announcements*
Medway	100
Tatsfield	60
Manningtree	30
Brookmans' Park	70
Guildford	60
Brighton	50
Bexhill	30
Folkestone	40

The total number of announcements shown (440) exceeds the total for Wrotham alone because duplication is necessary in certain cases. Furthermore, stations serving the periphery of the area would need to have a higher allocation than that shown in the Table because they would also need to cover country outside the Wrotham area. However, it will be seen

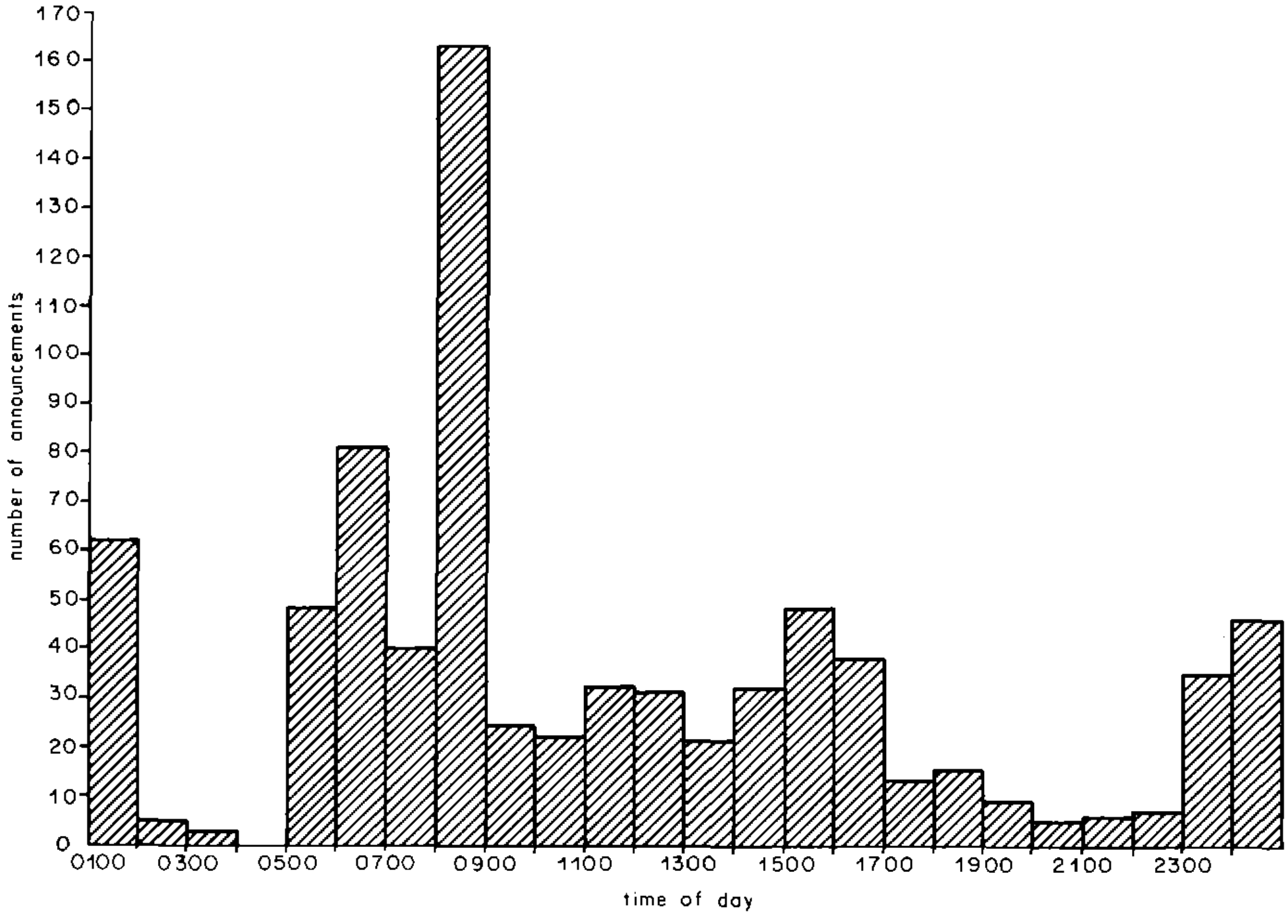

Fig. 2 Distribution of announcements passing through Motoring Unit as a function of time of day. Total of 785 announcements for a period of 30 days

that providing reception is largely confined to the local station, there is a significant reduction in the number of announcements heard by individual motorists. Furthermore, the chance of the information being relevant is considerably increased. Whilst considering the demand, it is pertinent to note that in the case of the busiest station (Medway), the peak load for the period examined amounted to sixteen announcements per hour. Thus the demand here for broadcasting time between 0800 and 0900 would be met by a maximum allocation of up to eight minutes.

4 The transmitter network

4.1 Fundamental requirements

It is proposed that a suitable traffic information service could be achieved by a network of stations each having a service range of about 30km. Assuming this range, several transmitters would have to operate simultaneously to make efficient use of any channel allocated. To permit this, the network would be divided into a number of groups of stations, and within each group simultaneous transmission would not be permitted. The size of the theoretical lattice embracing each group of stations is dictated by the interfering range. Previous investigations have already shown that a lattice containing sixteen stations in each group would be the most suitable way of covering the United Kingdom. A minimum interference distance of 170km would then exist between simultaneously operating transmitters which would go to make up a time division multiplex network. Fig. 3 shows a theoretical lattice network with transmitter separation of 50km (service radius 30km). If an automatic switching sequence were used in such a system, each station could be allocated a time slot of, say, 30sec. for its announcement in a cycle period of 8min. In Section 3.3 it was stated that at peak hours the busiest station in the London area might be asked to radiate eight minutes of announcements in one hour, whereas if all sixteen stations in a group were to share the time equally, each could transmit for only 3¾ minutes per hour. It would therefore be necessary to radiate less than the desired number of announcements in a peak period, unless it proved practicable to divide the time unequally between stations. Methods of operation are discussed in Section 4.4.

To achieve the highest probability of adequate reception, and in order that the receiver mute shall function efficiently, the field strength of the transmissions should not be subject to wide fluctuations with movement of receiving location. This requirement is influential in dictating the frequency which should be used.

4.2 Choice of frequency

Work so far endorses the opinion that frequencies above the m.f. band would not be suitable for the proposed service. The h.f. band is disregarded because the propagation characteristics are quite unsuited to the needs of a network of low-power stations requiring local and consistent coverage. With a v.h.f. channel, although the median protection ratios available would be higher than those obtained at l.f. or m.f., the larger variations of field strength with receiving location would produce wide local deviations about the median values. This wider field strength variation would also demand a low muting level (if reception is to be guaranteed) with a consequent increase in the reception of extraneous information. Furthermore it would probably be impossible to find a frequency either within, or adjacent to, the existing Band II spectrum for this service.

The use of frequencies above the v.h.f. band is not considered here because of the further increase in local variation factor which would be incurred.

A frequency in the l.f. band does not appear suitable for the small areas required to be covered by each transmitter. This band would be more suited to a network of higher-power regional stations in which only one or perhaps two were required to operate simultaneously. In selecting an operating frequency in the l.f./m.f. range an important factor which which must be remembered is the local oscillator interference which could be created by ordinary car receivers. This would dictate the use of a frequency below about 600kHz or between about 760kHz and 975kHz.

The best part of the radio spectrum that would seem to provide low fluctuation with vehicle movement is that between 500kHz and 600kHz. Also by going to the lower end of the m.f. band a better compromise between day and night-time interference is reached, particularly when unwanted sky-wave levels are generated solely within the traffic network, as will be seen later.

4.3 Calculations

For the purposes of calculation a possible practical arrangement for traffic information transmitters using seventy-two existing BBC sites has been drawn up and this is shown in Fig. 4. In the frequency range considered, local ground conductivity dictates that radiated powers should exceed 500W in a few cases, although the average power would be nearer 250W. A protection ratio of 18dB has been deemed adequate because the service is needed to convey intelligence only and not entertainment. The following calculations give protected field strengths for the service areas when operating both in the day and at night. In this context it should be noted that sky-wave field strengths shown are those exceeded for 50 per cent of the time. Inevitably, of course, the use of a medium frequency means that the coverage at night will be reduced by interference, but the majority of traffic problems occur during the day, when there is much less interference.

The first session of a Regional Administrative Broadcasting Conference, intended to prepare a plan for the l.f. and m.f. bands, took place in Geneva in October 1974. Until the second session is held (planned for October/November 1975), it is difficult to forecast the kind of assignment that might be obtained for a TDM traffic information service. However, in the calculations three alternatives have been assumed. Firstly, that a single frequency would be used exclusively for a motoring service in the UK and elsewhere in Europe. Secondly, that a TDM network in the UK would use a channel allocated for sharing by low-power transmitters. The Copenhagen plan provided two such channels, termed 'International Common Frequencies' (i.c.f.s). Thirdly, that the UK traffic service would have to share a channel with high-power stations elsewhere.

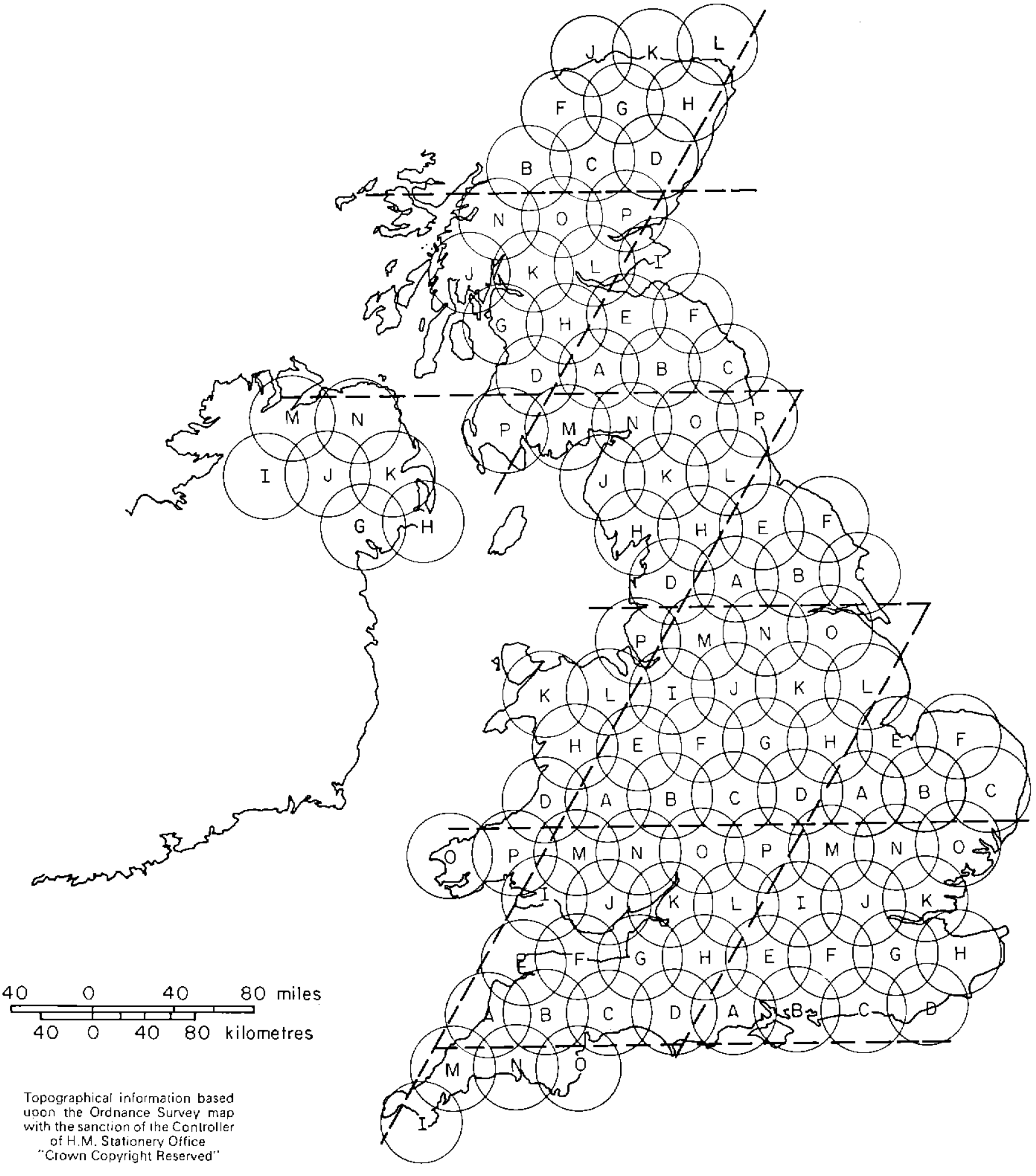

Topographical information based upon the Ordnance Survey map with the sanction of the Controller of H.M. Stationery Office "Crown Copyright Reserved"

Fig. 3 Theoretical lattice for groups containing sixteen stations. Simultaneous transmissions occur between stations having the same identification letter

A field strength of 70dBμ* has been considered as the minimum to give a day-time service. This choice is reaffirmed when the receiver design is considered later in the report.

Alternative 1. For the purposes of calculation, a frequency of around 600kHz has been assumed to be dedicated exclusively to the TDM network.

Fig. 5 shows an example of the calculation to assess ground-wave, sky-wave and combined interference levels at one of a

---

* In this report field strengths are quoted in dBμ, that is, decibels relative to 1μV/m.

number of receiving test locations investigated. Table A lists the transmitters broadcasting in the same time slot, records their distance from the test location and by considering local ground conductivity, establishes the e.m.r.p.† for each interfering station. Table B lists under respective transmitter numbers the field-strength for 1 kW over the interfering ground-wave path and takes into account overall ground conductivity and land/sea mixtures.

---

† Effective monopole radiated power. In this context this may be regarded as the transmitter power less power dissipated in the aerial and earth systems.

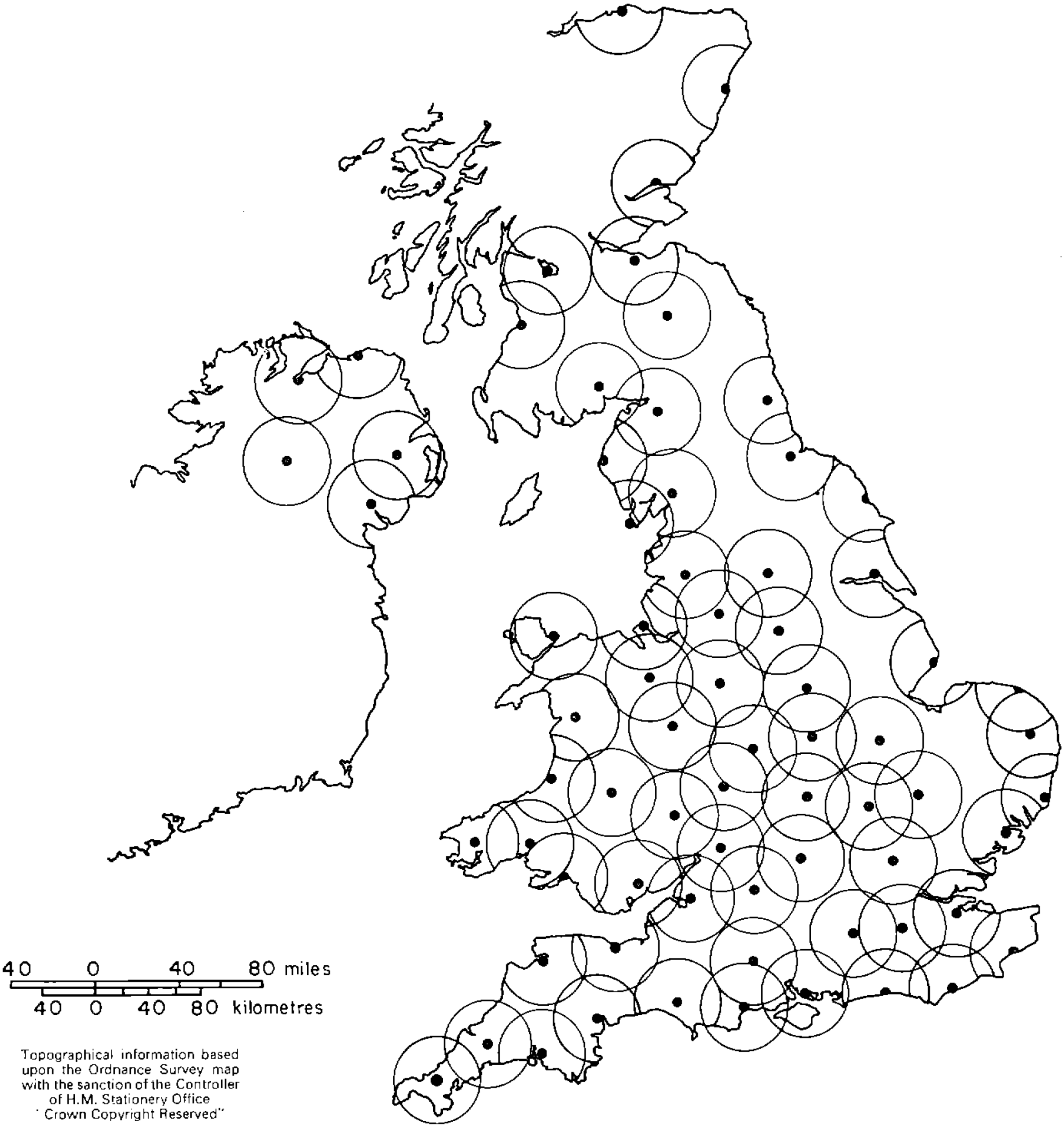

Topographical information based upon the Ordnance Survey map with the sanction of the Controller of H.M. Stationery Office
"Crown Copyright Reserved"

Fig. 4 Possible network of traffic information transmitters using seventy-two existing BBC sites

TRAFFIC INFORMATION SERVICE NETWORK

* Time Slot Number 2 Frequency: 593 kHz
Service Area: Dodford
Test Location: Northampton

TABLE A

Interfering Source	*No.*	*D(km)*	*mho/m* $\times 10^{-3}$	*E.M.R.P. for 30 km dB rel. 1 kW*
Rampisham	1	208	10	−8
Bexhill	2	185	10	−8
Aldeburgh	3	174	10	−8

TABLE B

Ground-wave				
No.	*FS 1 kW dBμ*	*E.M.R.P.*	*Prot. Ratio*	*PFS dBμ*
1	50	−8	+18	60
2	50	−8	+18	60
3	52	−8	+18	62
			$\sqrt{E^2}$	65

TABLE C

Sky-wave				
No.	*FS 1 kW dBμ*	*E.M.R.P.*	*Prot. Ratio*	*PFS dBμ*
1	52·5	−8	+18	62·5
2	52·5	−8	+18	62·5
3	52·5	−8	+18	62·5
			$\sqrt{E^2}$	67

TABLE D

	dBμ
Day protected field strength	65
Night protected field strength $\sqrt{(\text{ground}^2 + \text{sky}^2)}$	69
Night interfering field strength level	51

Fig. 5

The appropriate e.m.r.p. value and protection ratio are then added to give the protected field strength for each contribution; the resultant is shown at the bottom of the column. In Table C the sky-wave field strength exceeded for 50 per cent of the time is derived in the same way; the interfering transmitters are assumed to have sites with good ground conductivity. Protected fields for day and night are shown in Table D, together with basic value of night-time field strength.

Fig. 6 is a summary list for an area with the greatest transmitter density, showing receiving test locations in each service area tabulated against individual levels of interference and 50 per cent night-time field strengths.

The foregoing has assumed the network is confined to the United Kingdom. To obtain some idea of the result if this network were to be extended across Europe a near-infinite lattice has been assumed to be composed of transmitters having an average e.m.r.p. of 250 W (−6 dB with respect to 1 kW). Then, under these circumstances:

Field strength of sky-wave in near-infinite lattice = 66 dBμ for 1 kW e.m.r.p.
= 60 dBμ for 250 W e.m.r.p.
UK Peripheral allowance* = −3 dB = 57 dBμ

Protected Ratio = +18 dB
Protected Field Strength = 75 dBμ

for 5 $\times 10^{-3}$ ms/m Day-time range = 30 km
Night-time range = 20 km

Additional stations in Europe would not affect the day-time protected fields and at night the mutual level throughout would be more or less uniform at 75 dBμ. In the absence of precise knowledge concerning the exact frequency, adjacent channel interference is not considered here.

Alternative 2. This would be to co-channel the UK network with transmitters using ICF assignments; 1 MHz has been taken as a likely frequency. Of course, because of the mode of operation, the maximum power required for such an assignment for the UK would only be five times the e.m.r.p. for one station, because never more than five stations are in simultaneous operation.

Cumulative multiple sky-wave from ICFs is about 60 dBμ at present.
With a protection ratio of +18 dBμ Protected field strength = 78 dBμ.

It is not known what protection would have to be given to transmitters on the Continent. For this calculation it will be assumed that a protection ratio of 30 dB would be required, and that the protected field strength, as determined by interference from the UK alone, must not exceed 84 dBμ. (This means that if the protected field strength were 90 dBμ in the absence of interference from the UK, the latter would increase it to 91 dBμ.†) On this basis the resultant field strength in Europe due to the UK transmitters must not exceed 54 dBμ.

---

* This term is used to identify the station's position in the announcement sequence used in the group, assuming automatic switching is employed.

* To take account of the advantages derived by the UK from its position on the Western boundary of Europe.

† Power addition of two signals differing by 6 dB gives a resultant approximately 1 dB greater than the stronger signal.

TRAFFIC INFORMATION SERVICE NETWORK
BASIC UK ONLY
SUMMARY LIST OF PROTECTED FIELD STRENGTHS FOR 593 KHZ
NUMBER OF STATIONS PER GROUP = 16

*Time slot No.**	*Transmitter*	*Receiving test location*	*50% Night FS*	*PSF Day dBμ*	*PSF Night dBμ*
1	Droitwich	Stratford	51	65	69
2	Dodford	Northampton	51	65	69
3	Bournemouth	Lymington	49	60	67
4	Fareham	Ventnor	49	61	67
5	Sutton Coldfield	Kenilworth	53	67	71
5	Tatsfield	Crawley	52	62	70
5	Tatsfield	S.W. London	53	65	71
6	Leicester	Nuneaton	50	64	68
7	Salisbury	Andover	50	64	68
8	Guildford	Alton	49	62	67
9	Bristol	Chippenham	49	64	67
10	Swindon	Burford	52	64	70
10	Dolgellau	Aberdovey	53	68	71
11	Wrexham	Corwen	52	64	70
11	Wrexham	Whitchurch	52	64	70
12	Stoke-on-Trent	Macclesfield	50	61	68
13	Penmon	Llanrwst	51	65	69
13	Churchdown Hill	Evesham	52	64	70
14	Wallasey	Chester	49	62	67
15	Swansea	Llandilo	49	59	67
16	Brookman's Park	Luton	51	66	69

Fig. 6

Assuming five transmitters to operate simultaneously in the UK, it is found that the radiated power of each should be restricted to 280 W. Then:

for a conductivity of 5×10^{-3} ms/m
  Day-time range = 20 km
  Night-time range = 10 km
for a conductivity of 1×10^{-3} ms/m
  Day-time range = 7·5 km
  Night-time range = 4·5 km

Certain stations near the south-east coast would be even further restricted in range.

Alternative 3. For a UK network to be co-channelled with normal services radiating from existing stations, a frequency near 500 kHz has been considered as an example. The various night-time protected field strength from sources sharing the channel are as follows:

(*a*) Field strength in Central England from source 1 = 56 dBμ
  Frequency 533 kHz, protection ratio 18 dB, protected field strength = 74 dBμ
(*b*) Field strength in Central England from source 2 = 66 dBμ
  Frequency 527 kHz, protection ratio 10 dB, protected field strength = 76 dBμ
(*c*) Field strength in Central England from source 3 = 53 dBμ
  Frequency 529 kHz, protection ratio 21 dB, protected field strength = 74 dBμ.

From these results, multiple protected field strength = 80 dBμ. This could limit the night-time range of the TDM stations to about 13 km.

Dealing now with the interference which would be caused to these stations by the TDM network, existing protected field strengths are as follows:

Source 1 service area = 85 dBμ
Source 2 service area = 95 dBμ
Source 3 service area = 105 dBμ

To calculate the contribution of the TDM network, the latter is assumed to consist of five 500 W sources operating simultaneously from a point in Central England, that is, a combined e.m.r.p. +4 dB w.r.t. 1 kW. Then contributions are as follows:

Service area	*Field strength*	*Prot. rat.*	*Prot. F. S.*
Source 1	29 dBμ	30 dB	59 dBμ
Source 2	41 dBμ	22 dB	63 dBμ
Source 3	41 dBμ	33 dB	74 dBμ

A high degree of modulation compression at the transmitter was assumed when deriving the adjacent channel protection ratios.

From the results it will be seen that the introduction of the traffic information service may be neglected in terms of additional interference to existing services. Indeed, powers higher than 500 W could be used; for example if the radiated power of each transmitter were 2 kW, the protected field strength of

* Assumes simple sequential switching for interference purposes.

source 1 (the worst case) would be increased by only 0·2dB.

It is very obviously very desirable that night-time interfering field strengths do not cause spasmodic mute operation. With a muting level of 70dBμ, clearly Alternative 1 provides adequate protection. However, in the case of the other alternatives, interfering field strengths for 50 per cent time between 60dBμ and 66dBμ could operate the mute on certain occasions at night. More work will be necessary to quantify this risk.

A possibility that has not been studied in detail is the use of a normal UK assignment, such as one of the frequencies now used for high-power transmissions. The objection to this course would be the vulnerability of the low-power transmissions to the introduction of unauthorised transmitters in Europe; to discourage these it would be necessary to radiate at least 25kW from each transmitter, but the capital cost of all the transmitters would then be high.

4.4 Methods of network switching and operation

Assuming automatic operation, the simplest way in which to bring on each station in the separate groups or cells would be to transmit sequentially along and up the cell with individual automatic switching centres each sending control data. All control centres could be linked, so that if it became necessary to over-ride the sequence during an emergency certain transmitters could be brought up with only a small reduction in co-channel protection. This might be accepted on infrequent occasions. Pre-determined inhibits between centres would prevent the worst situation occurring whereby certain adjacent transmitters were made to operate at the same time. Another solution to deal with emrgencies has been suggested by the Transport and Road Research Laboratory whereby each sixteen-station cell is allocated seventeen time slots, thus providing a spare time slot every cycle which could be used to operate the appropriate transmitter containing an emergency within its coverage. If the road situation was normal then the extra slot would merely pass as dead time. This system would provide a reserve of time to deal with an exceptionally heavy demand in one area, but it would not necessarily shorten the waiting time.

Thirdly, rather than employing sixteen stations per cell eighteen could be introduced with very little difference in overall interference levels and in an emergency the large cell could be switched to a 'double-nine' arrangement giving the system increased flexibility by increasing the chance of operating the station best situated to deal with an emergency. It is assumed that the increased interference could be accepted in an emergency.

A further arrangement is contained in the section dealing with the receiver and has been dictated by the probable need to introduce a time delay before the carrier controlled mute closes the receiver down.

Probably the best solution would be to have a system in which transmission was directed on demand from control centres. For example, each group would be controlled from a centre which would receive and co-ordinate the information, and would then select the transmitter serving the appropriate area. Links between control centres would guard against the risk of simultaneous transmission of stations within mutual interference range.

5 The receiver

5.1 General

An important advantage of the time division multiplex proposal is that it operates on a single frequency and hence the motorist will not need to tune a separate receiver. Assuming the use of a frequency in the low part of the medium-wave band, a straight tuned radio frequency receiver could be employed, with consequent reduction in cost and avoidance of any interference created by a local oscillator. This could be very much cheaper than a medium-wave superheterodyne or v.h.f. car radio. Another advantage already mentioned is that the driver will receive only local information, i.e. relevant to the areas through which he is passing. Satisfactory working here will depend to a large extent on the system of car receiver muting adopted, and to assist with the specification of this important feature and to clarify other aspects a limited programme of field work was carried out.

5.2 Field work

5.2.1 Scope

In theory, it should be possible to move away from an m.f. transmitter without significant loss of service, until the muting level field strength is reached. In practice, variations of field strength occur which can result in sporadic operation of the mute. This means that the boundary of the service area will be diffused and even within the limit, drop-outs may occur. The problems of irregular reception would, of course, be accentuated where a switching zone was common to two or more overlapping services, when mixed information might be heard with a confusing loss of continuity. Thus the primary objective of the field work was to establish the clarity with which the service limit could be defined when travelling along roads radial to the transmitter. Certain other items of interest emerged from the work and these are also discussed.

The majority of the field work was carried out using a Vauxhall Victor estate car. This was fitted with a prototype receiver containing an adjustable mute. Various aerials were used in conjunction with the receiver, and their performances were compared. Illustrations of these aerials form Fig. 7. for the majority of tests, however, the receiver was fed by the gutter-mounted telescopic whip aerial fixed on the nearside and calibrated against a 'Potomac Instruments' field-strength meter. The mute threshold was set at 70dBμ and would switch with only about ±0·25dB deviation.

For listening and measuring it was desirable to tune to a transmission at the low-frequency end of the medium waveband, sited in the London area with about 500W e.m.r.p. Thus the receiver was aligned to IBA 'Capital Radio', transmitting from the Lots Road site on a frequency of 557kHz.

5.2.2 Definition of boundary

Initially a peripheral route was followed and an assessment made of the area where switching indecision caused unsatisfactory listening. Fig. 8 shows a mobile survey comprising a 120° sector from Reading to Sevenoaks and involving a journey through such marginal towns as Farnborough, Alder-

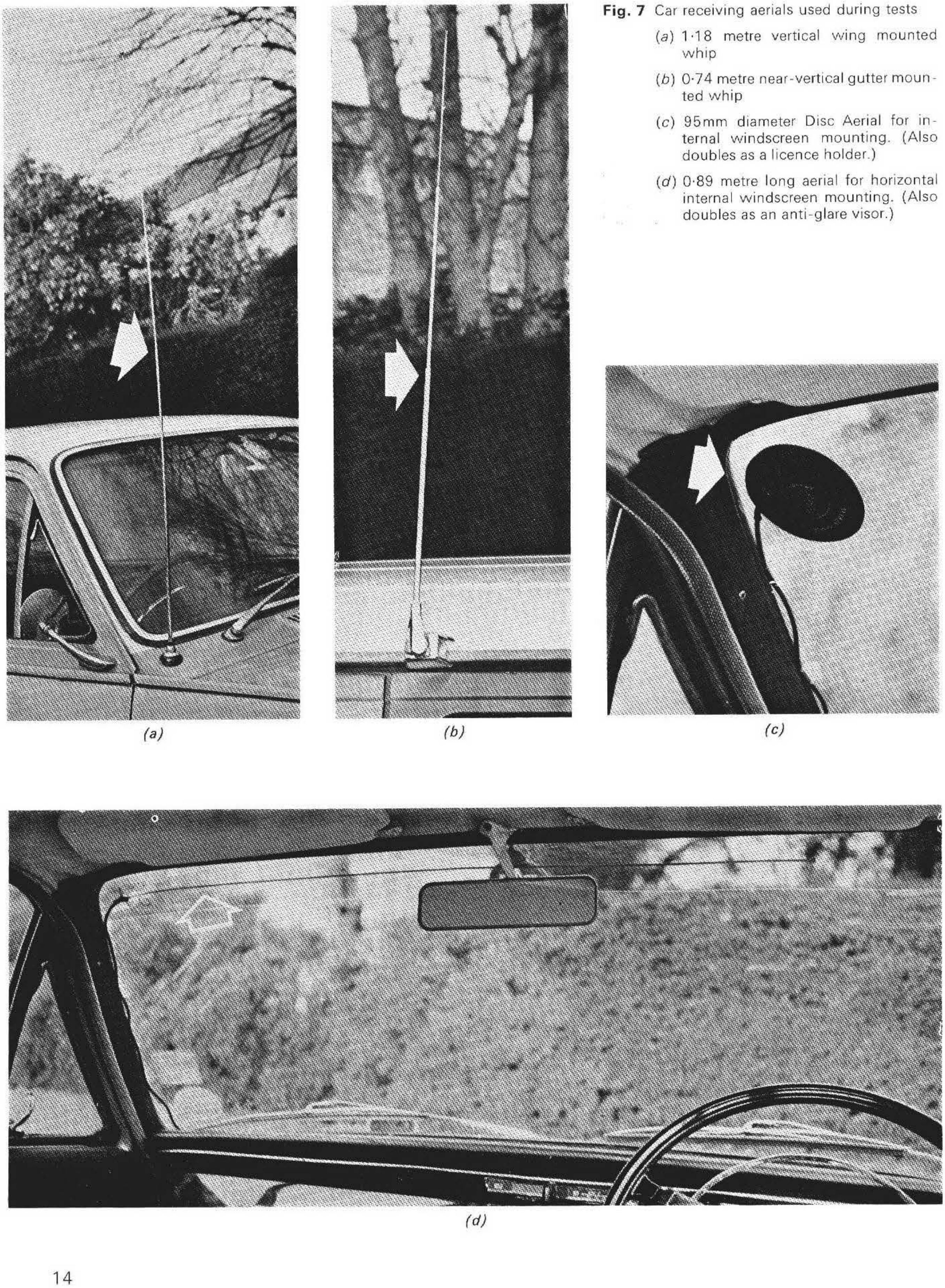

(a) (b) (c) (d)

Fig. 7 Car receiving aerials used during tests

(*a*) 1·18 metre vertical wing mounted whip

(*b*) 0·74 metre near-vertical gutter mounted whip

(*c*) 95mm diameter Disc Aerial for internal windscreen mounting. (Also doubles as a licence holder.)

(*d*) 0·89 metre long aerial for horizontal internal windscreen mounting. (Also doubles as an anti-glare visor.)

shot, Guildford, Crawley and East Grinstead. Three categories of reception are plotted. The region shown hatched indicates the extent of spasmodic mute operation, which could be annoying during traffic announcements. Working towards the transmitter from the inner and dotted contour the service may be considered as solid, if very short 'drop-outs' are ignored. Moving away from the outer contour the mute remains in permanent operation with no further reception.

Results obtained at this stage suggested that a more precise analysis was required if any recommendations were to be made about future receiver design.

Fig. 9 is an example of graphic information obtained by equipping the Vauxhall with a twin channel recorder running at 20 mm/minute. The chart shows field strength on the upper trace and mute drive level on the lower. A second aerial attached to the offside front wing was used to feed the recording meter, with no adverse effect on the performance of the gutter-mounted aerial, which continued to drive the receiver and provide muting data. Using this arrangement two 50 km radial journeys were undertaken, the first from Sutton to Slaugham and the second from Balcombe to Streatham (see routes on Fig. 8). Unfortunately in these preliminary trials shortage of time dictated that both radials ran in approximately the same direction from the transmitter. While both Slaugham and Balcombe are at the southerly extremes of the service area, i.e. mute had entered permanent operation, it was considered unnecessary to start close to the transmitter. Therefore, the overall transition from the maximum receivable signal to

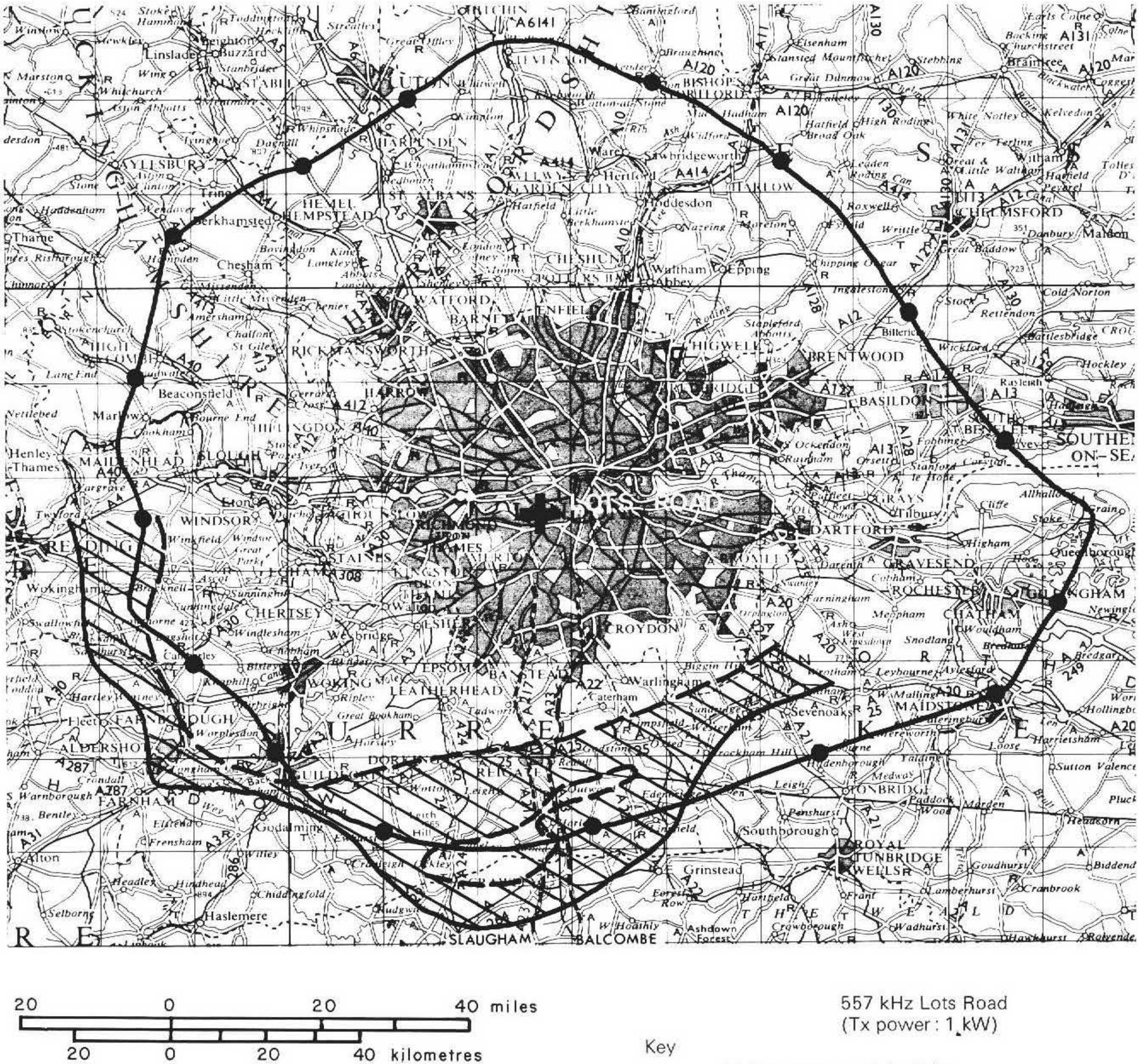

557 kHz Lots Road
(Tx power: 1 kW)

Key

—●— M.P.T. measured 3 mV/m
—— Service limit (Mute permanently on)
— — — Service limit (Mute commences operating spasmodically
\\\ Area where spasmodic operation is annoying

Topographical information based upon the Ordnance Survey map with the sanction of the Controller of H.M. Stationery Office "Crown Copyright Reserved"

Fig. 8

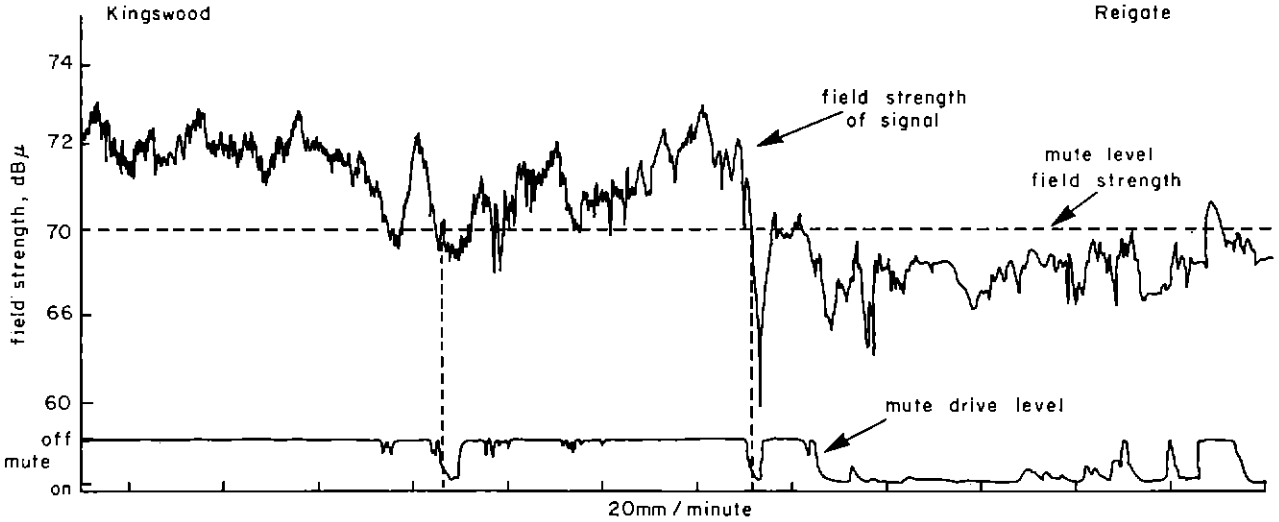

Fig. 9 Chart recording of field strength of Capital Radio, 557kHz

70dBμ was not fully investigated. However, to obtain a more accurate balance between 'on-time/off-time' and give a representative result for field strength with respect to percentage journey time, the duration of each radial was projected back to Lots Road. The extended times of 68min. and 70min. for outward and inward journeys then became a basis for preparing the distribution given in Fig. 10. To assess the proportion of traffic which would be affected by intermittent operation it would be necessary to complete the contours and then determine traffic density within the areas. The radial assessment, however, does illustrate the situation. More extensive field trials to be undertaken will examine this factor fully.

5.2.3 Effect of local variation on mute

In addition to macroscopic variations in field strength level which give rise to the boundary diffusion mentioned in the previous section, local variations could also cause spasmodic operation of the mute. Of course, as already mentioned, one of the reasons for selecting a low m.f. for this service is because the extent of local variations is low. Some investigation has already been carried out here, and this has produced the result shown in Fig. 11. These results have been compared with local variation factors for the v.h.f. and u.h.f. bands, and this reveals that in this respect, m.f. reception is, as expected, less susceptible to fluctuation with movement of the car.

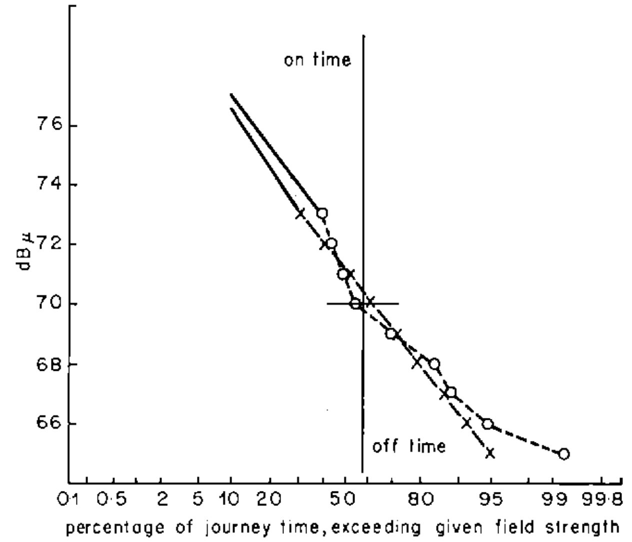

Fig. 10 Analysis of chart recordings of Capital Radio 557kHz using a wing aerial on a Vauxhall estate car

o - - - - o Sutton (A217) to Slaugham
x ——— x Balcombe (B2036) to Streatham (A23)
——— Projected to Lots Road

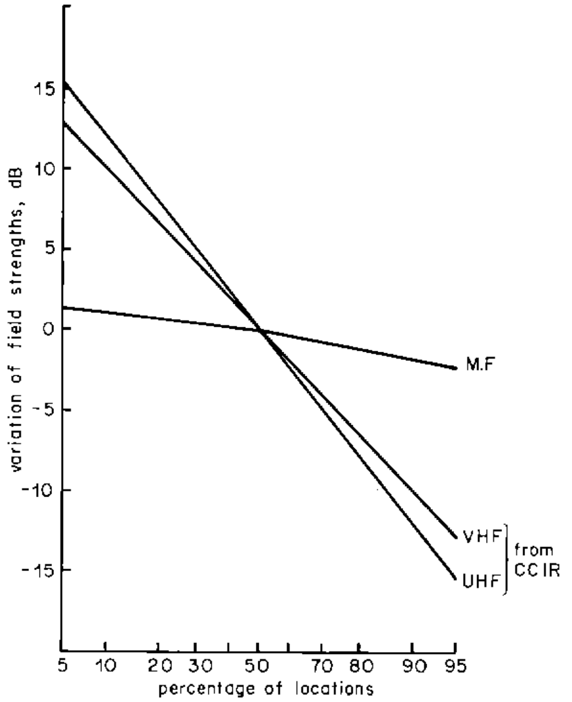

Fig. 11 Variation of field strength, with respect to the median value recorded over areas of approximately one square kilometre

5.2.4 Mute time constant

The variation of field strength and the response of the mute introduces the question of the mute time constant. The receiver under test had virtually no 'hold-on' capability and once the input voltage fell below the preset threshold the mute operated within about a second. If muting could be delayed for at least 10–15 sec. after the signal fell below the 70dBμ threshold, then according to Fig. 12, the occurrence of total information loss would be substantially reduced as longer periods of signal reduction could be tolerated. With further reference to Fig. 10, local variation within the nominal service area seldom caused the median field strength to fall below 66dBμ within the 'off-time'. As it is reasonable to expect the receiver a.g.c. to deal successfully with a fading range of 4dB between 70dBμ and 66dBμ there should be no discernible audio impairment throughout an announcement. Further development work during a proposed field trial of the TDM system is expected to assist the design of the most suitable mute delay characteristic. It is pertinent to note at this point that the transmitter switching sequence might help the problem. If there is a risk that receiver lag will cause sporadic reception of adjacent areas in automatic operation the timing need not be sequential along and up a cell but be arranged as Fig. 13, thereby increasing the distance between transmitters operating consecutively.

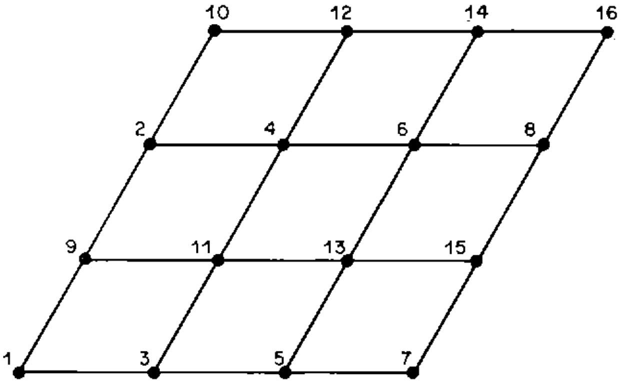

Fig. 13 Possible sequence of transmitter operation

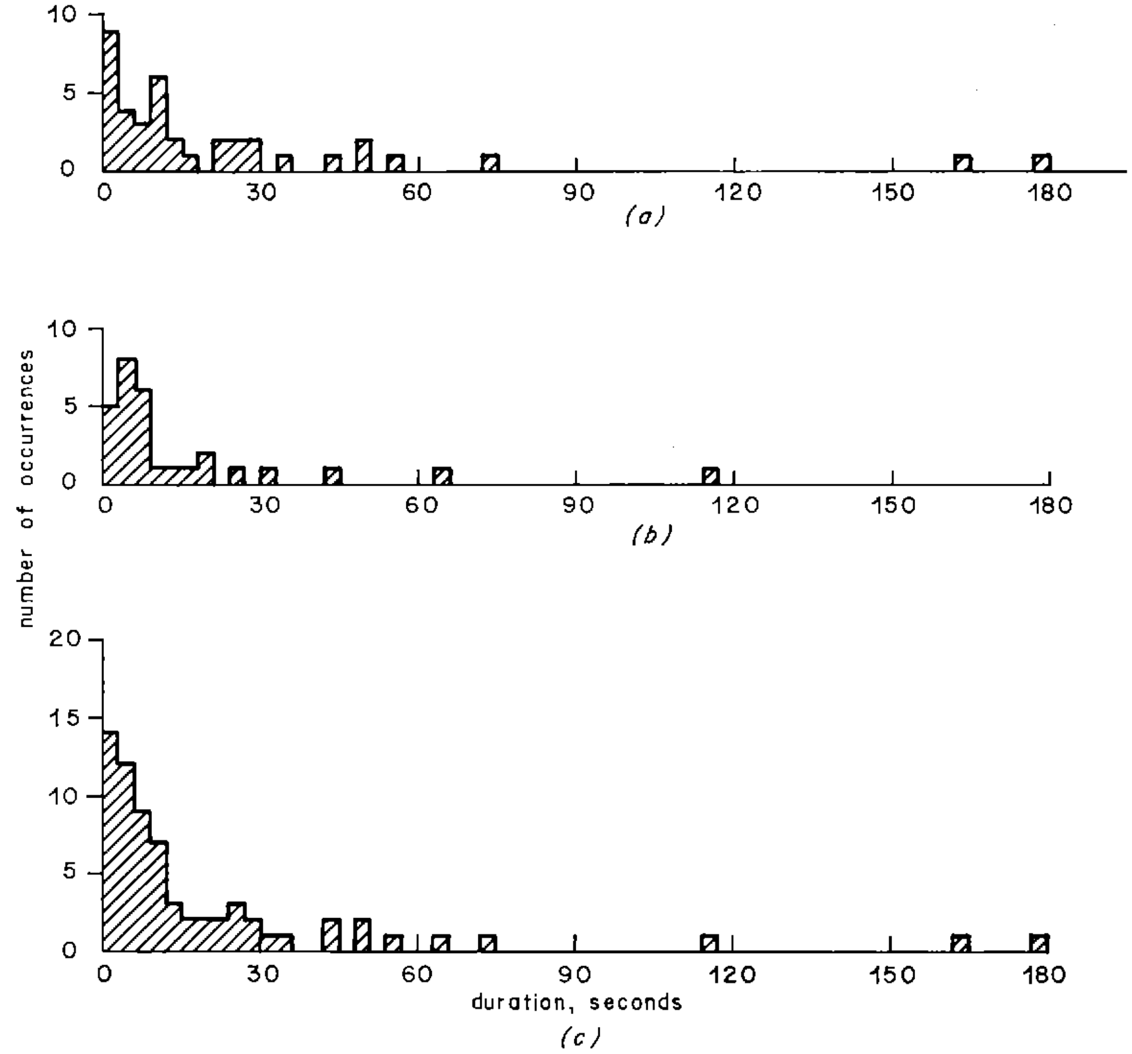

Fig. 12 Occurrence and duration of receiver muting
(*a*) Sutton to Slaugham. Range 10.6 to 48.7km (*b*) Balcombe to Streatham. Range 7 to 46·3km (*c*) Combined

At the risk of making the receiver slightly more expensive the addition of an amplitude latch could assist in smoothing out reception breaks once the mute has been lifted. For example if 70dBμ continued to be the field needed to open the mute, thus retaining similar protection against unwanted signals, and a mute closure level of 66dBμ was adopted, then according to Fig. 10 the percentage 'on-time' would rise from 58 per cent to about 93 per cent. Unfortunately, a continuous transmission is unsuitable to test any such hysteresis system. Only by conducting tests with burst transmissions, typical of a TDM network, could the modification be properly appraised.

5.2.5 Conclusions from preliminary field work

The field trials so far completed have been too limited to resolve all the problems, and further work is essential. However, it is clear that the main difficulty at the receiving end is the specification of the mute. Time delay and amplitude latch techniques could help to sustain an announcement, but would do nothing to prevent a driver missing the opening or the entire transmission when his vehicle was in a local dead spot. The problem could be partially overcome by devoting the first few seconds of each announcement to a non-information period, which would give the mute an opportunity to lift and hold before details were transmitted. This period could be occupied with warning tones which would in any case be necessary to avoid alarming the driver by an unexpected burst of speech.

As a result of this preliminary work a more extensive test is now planned, and for this it is intended to operate a group of three or four transmitters, using TDM.

5.3 Other receiver features

So far it has been assumed that, initially at any rate, the special receiver would be additional to, and separate from any existing receiver in the car. In the absence of any switching arrangement to select output from either, the output from the traffic receiver would have to compete against that of the car receiver. For the prototype receiver it was assumed that the audio output would have to equal that of the car receiver's, thus a 5W amplifier driving a 155mm × 104mm elliptical loudspeaker was used. Adequate output (in the absence of another receiver) was obtained from an 800mW cassette recorder, driving a much smaller loudspeaker. To overpower other 'in-car' entertainment, however, such a speaker would have to be mounted close to the driver's head, possible positions being either clipped to a sun visor or suspended from a hook on a door column. The electronics required for the traffic receiver can be very compact, and if a large speaker is not needed the receiver could be quite small. Ultimately, of course, if the service proved to be successful, the receiver could form part of the normal car receiver, and provision for switching from one output to the other could be contained in audio signals incorporated in the traffic announcement. With such identification a more sophisticated receiver could also contain the ability only to operate when fed with a unique tonal code, thereby giving full protection against spurious intervention by unwanted stations if the channel were occupied by foreign high-power transmitters. A short frequency-selective finishing tone would also stop interfering stations from capturing the receiver at close-down. A further embellishment would be to use the identification signals preceding the announcements to prevent the reception of repeated messages or to code messages into various categories, say for heavy vehicles only. The receiver could then be fitted with an 'information select' control to enable drivers to listen to the type of announcement best suited to their need.

The mute must operate at a prescribed field strength level, therefore the special receiver, associated feeder and aerial should be supplied to the motorist as a calibrated package. Obviously, the installation should be as simple as possible, and the features of four cheap aerials have therefore been examined. Fig. 14 shows the relative gain and horizontal radiation pattern (HRP) of these aerials. The windscreen attached horizontal strip and licence holder disc aerials can both be discounted due to poor gain and dependence on the mounting position. It is likely that the prospective listener will already have a permanently-mounted wing or roof aerial

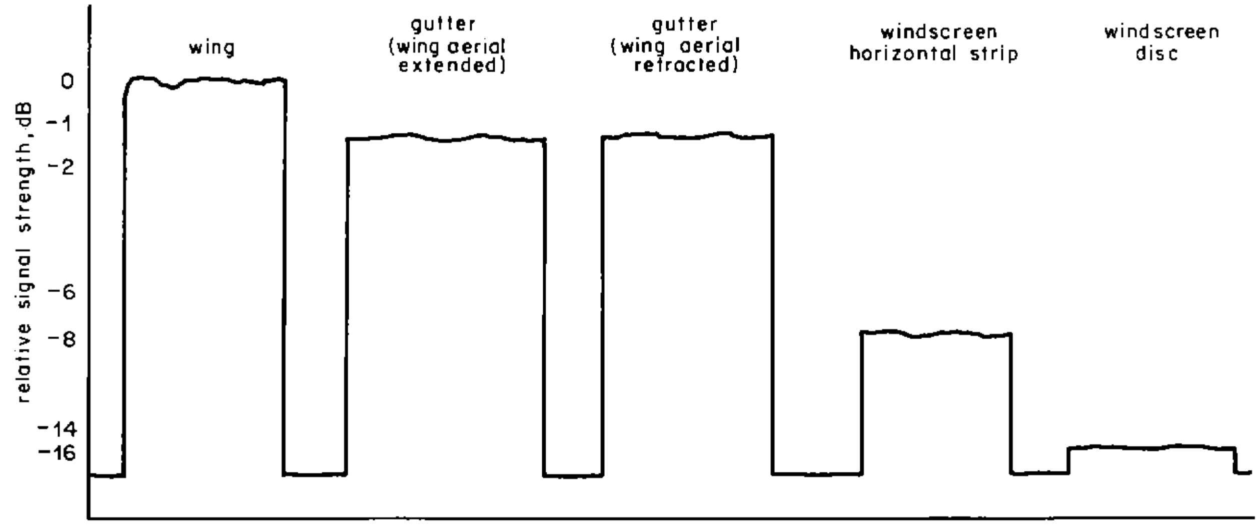

Fig. 14 Horizontal radiation patterns of car aerials

and would be reluctant to make more holes in the bodywork, therefore the clamp-on gutter aerial is thought to form the best compromise. During the field trials tests showed there was no measurable coupling between the two external aerials.

A brief study was also made of the receiver input voltage variations for different gutter fixing positions on a number of cars, and most samples fell in a 1dB to 2dB range with a maximum of 5dB when going from one model to another. In view of this it would seem desirable to fit a control giving ±2·5dB variation of mute level. The receiver dealer could then compensate for a range of installation sensitivity.

6 Discussion

This paper has given some details of a proposal to provide a motoring information service in the United Kingdom, using a network of low-power broadcast transmitters. It is beyond the scope of this paper to debate whether or not such a service is needed.* However, the investigation which has so far been carried out, together with associated work within EBU Subgroup K4, has served to clarify the role that broadcasting can play in serving the motorist. It will also ensure that any contribution supplements efforts being made by traffic specialists to provide other aids.

As far as broadcasting in the UK is concerned, there would seem to be four alternatives.

Firstly, the present services could be continued in their existing forms. The problems associated with these were outlined on the first page of this paper, and further elaboration is unnecessary. It is, however, emphasised that with the growth in the number of broadcasting stations the situation as far as the motorist is concerned is probably becoming more confusing. Which is his best source of information and how can he find it?

Secondly, without embarking on any ambitious new projects, it is possible to foresee changes of a programme nature which could improve the present situation. For example, clearer distinction between national and local announcements with transmission on appropriate channels could be a step forward. It would also help if the number of outlets providing authoritative announcements could be reduced, but obviously such a suggestion ignores the competition which currently exists in broadcast services. Nevertheless, if traffic information is regarded as important, then it would seem desirable to do everything possible to improve the situation.

A third alternative would be to restrict the inclusion of the motoring information to one of the national v.h.f. programmes. This would permit the use of the German proposal to give programme identification, but if such a course were adopted the amount of information which could be transmitted would not be any greater than is possible with the present arrangements, indeed, by confining it to the v.h.f. band it might very well be less. Certainly the number of motorists who would be able to receive these transmissions would be a fraction of those who currently have a car radio because the great majority of such receivers in the United Kingdom, and indeed in Europe as a whole, are for l.f./m.f. only. The problem of intrusion into programmes remains.

The use of v.h.f. for a motoring service also raises a fundamental point concerning reception quality in cars. A v.h.f. car receiver suitable for the German system will cost somewhere between £50 and £300 depending upon the degree of sophistication required. A motorist is not going to invest such a sum unless he is offered a very tangible return. Disregarding the unknown benefits of the motoring service, he will be promised better reception at v.h.f., but it is questionable if this can be fully appreciated in a motor car, where the ambient noise level may be as high as 80dBA. Certainly stereophonic cassette recorders for motor cars are very much in the vogue, but these are not subject to problems created in the propagation path. Certainly, also, in normal domestic listening conditions the advantages of frequency modulation at v.h.f. become obvious and this would seem to be a good reason for retaining these outlets for programmes designed for such listeners. The propagation problems which have been mentioned can be serious in the type of undulating terrain found in much of the United Kingdom, and the motorist may often need to retune his receiver; this is not an easy task for a driver. It would therefore seem unwise to initiate a service specifically designed for motorists using a Band II channel. Incidentally, it should be pointed out that the German proposal uses a subcarrier 57kHz above the main carrier for identification purposes. At present various other proposals, including quadraphony and SCA,* are being examined. It is unlikely that all these options can be accommodated in the sideband of a Band II service.

The fourth alternative is to introduce the TDM proposal. The advantages are as follows:

(i) Equipment required by motorist is cheap.
(ii) Manipulation on the part of the driver is not required.
(iii) He is free to select any programme he wishes on his car radio, or to enjoy silence until an announcement is made.
(iv) Because it is local, there is an improved chance that the announcement, when it occurs, would be relevant.
(v) Because the announcement will be distinctive, he is more likely to hear and understand it.
(vi) There could be a substantial increase in the amount of information transmitted, with consequent benefits to traffic.
(vii) The proposal presents the opportunity to establish proper nationwide machinery between traffic authorities and broadcasters.
(viii) The transmitter network would be comparatively inexpensive.
(ix) If existing sites are used, then the service could be brought into operation quite quickly.
(x) The proposal is at the design stage, and hence could be planned to complement other developments which are intended to aid traffic.
(xi) Although a broadcasting system, it is economic in frequency usage.

In the context of (viii) and (ix) above, it is pertinent to note that although a full plan for the UK might require seventy or so stations, more than 80 per cent of the country's traffic could be reached by about twenty stations. If the proposal

---

* In 1973 it was estimated that a 10 per cent reduction in road accidents would save approximately £40 million per annum in the UK, and a reduction of one minute per hour of journey time would give a similar saving.

* An auxiliary programme modulated onto a subcarrier.

will work, a limited network of this size would seem a very good investment.

Disadvantages of the proposal which are at present apparent are as follows:

(i) It may be difficult to obtain a frequency sufficiently free from interference to ensure reliable operation everywhere at night.
(ii) There is a risk of erratic operation in fringe areas.
(iii) It does not meet some of the requirements put forward by the Radio Programme Committee of the European Broadcasting Union for such a service, e.g. a multilingual service.

Dealing with the first disadvantage, from the initial examination it would seem that a solution is possible, at least on a temporary basis. If the proposal works, and is regarded as sufficiently important, then it is to be hoped that a frequency could be found for permanent operation. The problem of erratic operation in fringe areas needs further study, but if a complete solution cannot be found by receiver design, then it may be possible to diminish the effects by designing the network so that the fringe areas fall, wherever possible, in places where traffic is light. In any case a fuller examination of the traffic situation than has so far been possible is certainly essential in order to ensure the best coverage in terms of traffic requirements is obtained. With regard to (iii), certainly the amount of information is such that multi-lingual transmission could not be handled, because sequential operation would be required, with a corresponding increase in programme time. It is conceivable that if adequate frequencies were available, then one might be allocated to each language. However, such a proposal, like many of those mentioned elsewhere in the context of traffic services, seems ambitious at this stage.

So far the TDM proposal has been kept as simple as possible in order to make it cheap and attractive to the motorist. However, there is little doubt that various refinements could improve the admittedly crude set-up at present proposed. Whether or not such improvements are practicable is a matter which cannot be answered until a field trial has been carried out and further discussions have been held with interested bodies, including receiver manufacturers. A field trial is, in any case, essential, because only by this means can various aspects of the receiver design be resolved.

The work so far suggests that the principal difficulty in establishing any broadcasting system for traffic information is the gathering of information, and in particular, the interface between the traffic authorities and the broadcaster. If a TDM network is to be constructed, then it will be essential to institute control centres which would receive, classify and transmit the information, as well as maintain liaison with adjacent control centres servicing other parts of the network. Such centres could receive information from all reliable sources, and would soon build up valuable expertise to allow them to operate the TDM network to the best effect. A model of such an organisation is presently to be found in the BBC Motoring Unit, where the employment of ex-police officers ensures expert and sympathetic treatment of the information.

This paper has concentrated upon the requirements of the United Kingdom. A great deal of information has been acquired, however, which in due course will allow assessments to be made of the situation elsewhere in Europe. Although a standard traffic information system for use throughout Europe would seem to be a remote objective, much of the work will be considerably simplified if the objectives in each country can be clearly identified. Differences here may inevitably mean that a standardised system is neither feasible nor desirable.

Acknowledgements

The authors acknowledge the many useful discussions which have been held with engineers of the Transport and Road Research Laboratory, and with the Metropolitan Police. Cooperation from the BBC Motoring Unit and with members of BBC Local Radio is also gratefully acknowledged.

APPENDIX 1

TRAFFIC ANNOUNCEMENTS FROM BBC LOCAL RADIO STATIONS

1 Oxford

Six spots, 2/3 min. between 6 am – 9 pm = 18 min. maximum per weekday. Also at 5.15 pm, Royal Automobile Club live announcements for up to 2 min.

Maximum time/weekday with routine information = 20 min.

2 London

Twenty-four spots per day, one every half-hour each lasting about 2 min. A member of Radio London is on duty at the Metropolitan Police traffic control centre twelve hours each weekday and announcements are unscripted.

Maximum time each weekday with routine information = 50 min. to 1 hour.

3 Medway

Seven spots per day each lasting between 1½/2 min.

An average coverage of 1 min. is also given on each news bulletin every hour on the the half-hour twelve times a day.

Maximum time devoted per weekday 25 min. to 30 min.

With effect from October 1974 the Automobile Association will make the following unscripted contributions throughout the winter.

Weekdays	7/day each lasting 1/1½ min.
Saturdays	6/day each lasting 1/1½ min.
Sundays	2/day each lasting 1/1½ min.

General

All information received is transmitted and the length of announcement is tailored to fit amount. For any major accident schedules would be changed and programmes interrupted.

APPENDIX 2

BBC MOTORING UNIT

July 1974

Date	*Meteorological Office Information*	*Motorway Police*			*Other Roads Police*		
		Fog	*Ice Snow Floods Winds*	*Accidents Repair Congestion*	*Fog*	*Ice Snow Floods Winds*	*Accidents Repair Congestion*
Monday 1st	1		11	11		5	31
Tuesday 2nd	1		8	17		2	25
Wednesday 3rd	3		2	18			35
Thursday 4th	1			16		4	20
Friday 5th	3	4	2	3		2	39
Saturday 6th	1		1	9			15
Sunday 7th	2			1			8
Monday 8th				15			14
Tuesday 9th				9			23
Wednesday 10th	1		4	15	1	1	21
Thursday 11th	2		2	6			29
Friday 12th	1			12			8
Saturday 13th	4	1		3			19
Sunday 14th	1	1		6			7
Monday 15th	1		5	7			21
Tuesday 16th	1	4	2	11	2		31
Wednesday 17th	1		1	12			22
Thursday 18th	1			11			29
Friday 19th	1			17			23
Saturday 20th	1			9			32
Sunday 21st	2		1	1			9
Monday 22nd	2		1	7			27
Tuesday 23rd	1			7			17
Wednesday 24th	2			5		1	24
Thursday 25th	2			12			24
Friday 26th	2			19			22
Saturday 27th	2			9			15
Sunday 28th	1						6
Monday 29th				7			27
Tuesday 30th	1			17			28
Wednesday 31st	1		1	2		4	38
	43	10	41	294	3	19	689
	43		345			711	

TOTAL	1099

Radio 1	—	238
Radio 2	—	282
Radio 1/2	—	422
Radio 3	—	0
Radio 4	—	157
		1099

M.F. Propagation: a wave-hop method for ionospheric field-strength prediction

P. Knight, M.A., Ph.D., C.Eng., M.I.E.E.
Research Department

Summary: A new method for calculating the strength of medium-frequency sky-wave signals at night is described. Estimated losses due to all the ionospheric and terrestrial factors which affect a wave as it propogates from transmitter to receiver are subtracted from the field strength which would arise if losses were absent. The process is carried out for each propagation mode which is likely to make a significant contribution to the received signal; the contributions are then added on a power basis. The method is intended for world-wide application and for paths of any length. Field strengths predicted by this method for 152 paths in different parts of the world have been found to agree reasonably well with measured values.

1 Introduction

This report describes a new method for predicting night-time sky-wave field strengths at medium frequencies, which is intended for world-wide application and for paths of any length. It is called the wave-hop method because of its similarity to the wave-hop propagation theory for v.l.f. described by the CCIR.[1]

In its present form the method calls for an appreciable number of charts and curves, described in the sections which follow, and a certain amount of engineering judgement. It should, however, be possible to adapt it to a computer; some parts of the calculation would, in fact, be more conveniently performed with a computer because of the large number of variables involved. It may also be possible to achieve a worthwhile simplification by using the charts and curves to calculate propagation curves for typical conditions, with correction curves for less-typical conditions.

The method is described in detail in Section 2 and an example of its application given in Section 3. Section 4 gives results of comparisons between predicted and measured field strengths.

2 The wave-hop method

In the wave-hop method, median field strengths are calculated individually for each ionospheric mode which is likely to contribute significantly to the field strength at the receiver. The calculation takes into account all the ionospheric and terrestrial factors which affect the wave as it propagates from transmitter to receiver. In applying the method, the first step is to use charts to determine which ionospheric modes are likely to be important. For each mode which needs to be considered, convergence gain is added to the unattenuated field strength and the following losses subtracted:

Ground loss at transmitter and receiver
Polarisation coupling loss at transmitter and receiver
Ionospheric loss
Intermediate reflection loss (for multi-hop modes)

A transmitting aerial correction is then applied to each of the modes and, if two or more are of comparable strength, their powers are added.

The calculation gives the median field strength which should be observed after sunset when nocturnal conditions are well established over the entire path. The predicted field strength also corresponds to minimum solar activity. Further corrections may then be applied to determine the quasi-maximum field strength, or the field-strength at times nearer sunset or sunrise, or at some other point in the solar cycle.

2.1 Mode selection

Although m.f. propagation is mainly via the E-layer, F-layer reflections may occur at short distances at the higher frequencies in the band. Fig. 1(*a*) shows the reflections which are likely to occur six hours after sunset if the critical frequency varies in the manner described in Reference 2. It also shows that E- and F-layer reflections may be received simultaneously on short-distance paths.

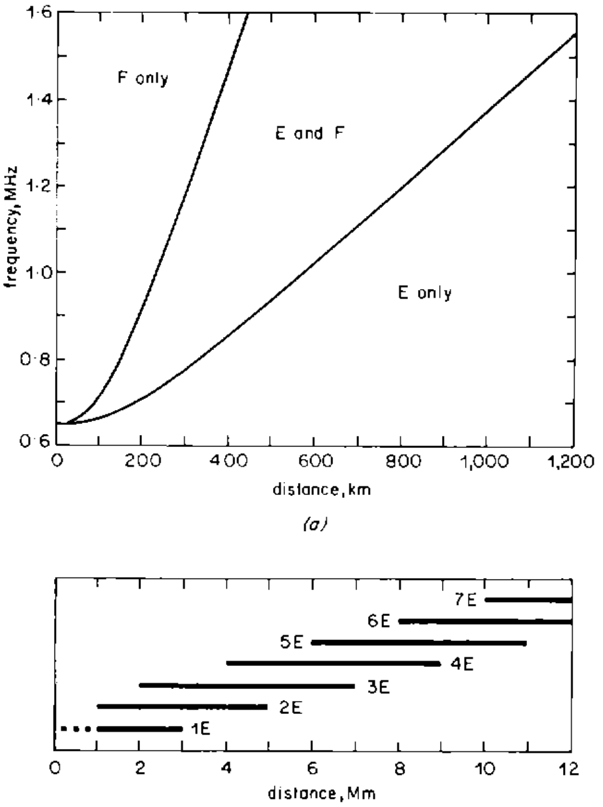

Fig. 1 Mode selection charts
(*a*) One-hop modes propagating six hours after sunset
(*b*) E-layer modes propagating to longer distances

At distances greater than 1200km, single-hop modes are unable to penetrate the E-layer, and multi-hop F-layer reflections do not usually contribute significantly to the received signal. At the longer distances, therefore, E-layer reflections are the only propagation modes which need to be considered and Fig. 1(*b*) shows the modes which should be taken into consideration. Fig. 1(*b*) takes account of diffraction around the curvature of the Earth; this may considerably extend the effective range of low-angle modes, especially when one of the terminals is situated close to the sea.

2.2 Unattenuated field-strength

The basic field strength to which convergence gain is added and from which all other losses subtracted, is shown in Fig. 2. This is the field strength which would be measured if the transmitter radiated with a cymomotive force (c.m.f.) of 300V in all directions above the horizontal and if the Earth and ionosphere behaved as perfect plane reflectors. The receiver is assumed to be connected to a loop or ferrite-rod aerial near the ground with its axis perpendicular to the direction of the transmitter; this orientation normally gives maximum pick-up.[*] With these assumptions, the unattenuated field-strength is given by

$$E = 66 + 20\log_{10}\frac{300}{d} \tag{1}$$

where E is in dBs relative to 1 μV/m and d is the path length via the ionosphere. Equation (1) includes 6dB to take account of the addition of the direct and ground-reflected waves at the receiver.

Fig. 2 shows the unattenuated field-strength for a range of distances measured along the surface of the Earth. In calculating d, the F-layer was assumed to have a virtual height of 220km, and the height of the E-layer was assumed to vary between 100km at vertical incidence and 90km at very oblique incidence; these heights were derived from ray-tracing computations with a model ionosphere.[2, 3]

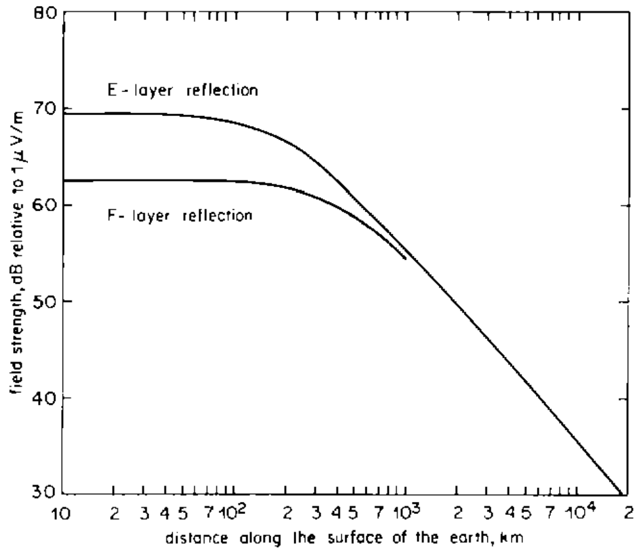

Fig. 2 Unattenuated field strength

Fig. 2 makes no allowance for convergence gain, which is discussed in the next section.

2.3 Convergence gain

The ionosphere behaves as a spherical mirror and causes a certain amount of focusing, thereby increasing the signal strength by an amount known as the convergence gain. This gain is greatest at very oblique incidence, where it is subject to an upper limit of about 9dB because waves are returned from the ionosphere by refraction rather than by specular reflection. Curves of convergence gain vs radiation angle which take refraction into account have been calculated by Bradley.[4] Fig. 3 which is derived mainly from Bradley's

---

[*] On short-distance paths near the magnetic equator a different orientation may sometimes give greater pick-up.

curves, shows convergence gain for E-layer reflections as a function of hop length measured along the surface of the Earth. The convergence gain for F-layer reflections for hop lengths less than 1000km is similar.

Although Fig. 3 was calculated for single-hop paths, it may be used for multi-hop paths with little error because ionospheric focusing on subsequent hops is approximately cancelled by defocusing at the intermediate ground reflections. It is important to note that Fig. 3 gives convergence gain as a function of hop length and not path length, and that the gain must not be included in the calculation more than once.

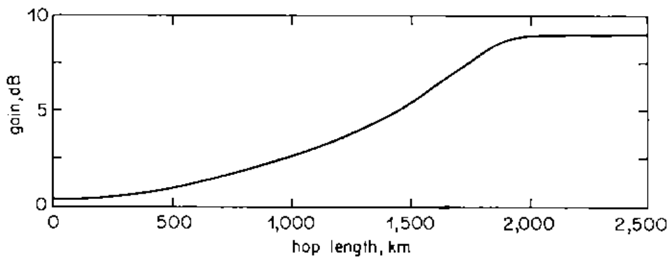

Fig. 3 Convergence gain

Since the unattenuated field strength and convergence gain are assumed to be independent of frequency, both may be combined in a single set of curves.

2.4 Radiation angle

An important parameter is the radiation angle, since this affects the ground loss at transmitter and receiver, the intermediate reflection loss, and, to a lesser extent, the polarisation coupling loss.

The ray-tracing computer program described in Reference 3 gives the distance at which a wave returns to Earth for a specified radiation angle. This distance depends on the virtual height of the reflecting layer and therefore varies with frequency and direction of propagation. An extensive series of ray-tracing computations for temperate and equatorial latitudes, for all directions of propagation and for frequencies throughout the m.f. band, has shown that the relationship between radiation angle and range is remarkably constant; a single curve for each layer therefore suffices.

Fig. 4 shows radiation-angle curves for E- and F-layer reflections, derived from the ray-tracing computations.* Fig. 4 may also be used to obtain the angle of arrival at the receiver even though it may differ slightly from the radiation angle because of ionospheric tilts and effects caused by the Earth's magnetic field; for all practical purposes the two angles may be assumed to be equal.

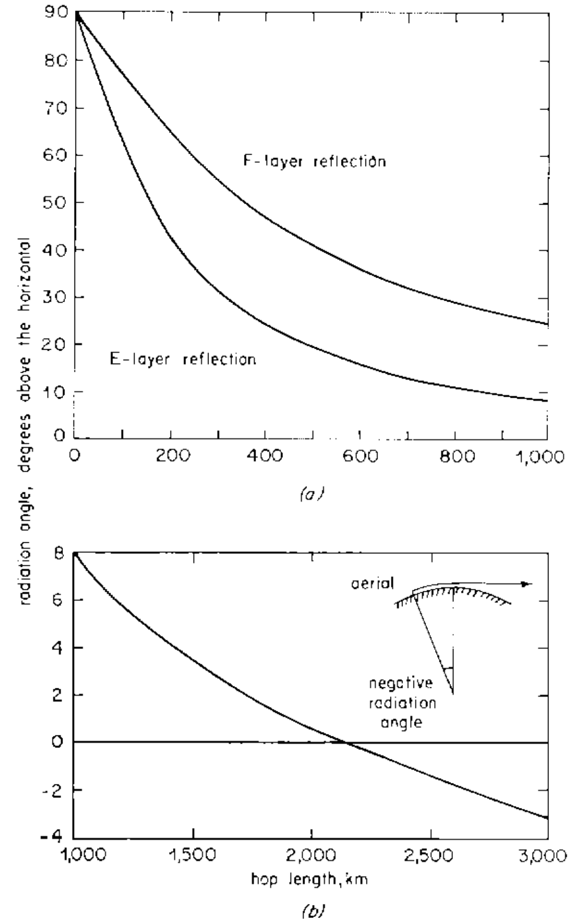

(a)

(b)

Fig. 4 Radiation angle
(a) short distances
(b) longer distances: E-layer reflection only

It will be seen that Fig. 4(*b*) has been extended to include negative radiation angles; these correspond to diffraction around the curvature of the Earth, and are defined in the inset to Fig. 4(*b*). To preserve symmetry and so avoid a discontinuity in the curve, the diffraction angles are assumed to be the same at both ends of the path, although they may in fact be unequal; this point is discussed further in the next section. In calculating the negative radiation angles shown in Fig. 4(*b*), allowance was made for atmospheric refraction, which has the effect of increasing the radius of curvature of the Earth by a factor of about 1·25 at medium frequencies.[5]

Fig. 4 may be used for multi-hop paths provided the path length is divided by the number of hops. If the hop-length exceeds 2,100km, diffraction will occur at the intermediate Earth reflection points as well as at the terminals; such multi-hop modes are unlikely to contribute significantly to the signals received over very long paths, however, because of the high total diffraction loss.

2.5 Ground loss at transmitter and receiver

In calculating the unattenuated field strength shown in Fig. 2, the transmitter was assumed to radiate with a c.m.f. of 300V in all directions above the horizontal. Although this assumes a hypothetical reference aerial, the concept enables the actual field strength to be calculated for any practical aerial system.

In designing such a system, it is usual to assume that the ground is perfectly conducting, the effect of finite ground

---

* All the computations used for the construction of these curves were performed with the idealised electron-density profile for six hours after sunset.[2] Although slightly shorter ranges are computed for times nearer sunset, the variation of range during the night is relatively smalland may be disregarded.

conductivity being taken into account subsequently. Thus if the aerial is a vertical mast or tower, the low angle radiation which is responsible for long-distance propagation via the ionosphere will be reduced by ground loss.[6] This loss, which is small at coastal sites and greatest at inland sites, must be applied as a correction to the unattenuated field strength. A similar correction must also be applied at the receiver, since all practical receiving aerials, including loop and ferrite-rod aerials, respond mainly to the vertically-polarised components of downcoming sky-waves.

If Earth curvature were neglected the ground loss at each end of path would be given by

$$L_g = 6 - 20\log_{10}\left|1 + \rho_v(\alpha)\right| \text{ dB} \qquad (2)$$

where $\rho_v(\alpha)$ is the Fresnel plane-wave reflection coefficient for vertically-polarised plane waves incident at angle α to the horizontal. Since $\rho_v = -1$ when $\alpha = 0$ for all ground conductivities, ground loss would tend to infinity at grazing incidence if the Earth were flat. Diffraction around the curvature of the Earth, however, causes ground loss to have finite values at grazing and negative radiation angles.

Diffraction around an imperfectly-conducting sphere has been studied theoretically by Wait and Conda[7] and their theory is applied here to the calculation of ground loss for radiation angles less than 5°, the radius of the Earth being increased by a factor of 1·25 to allow for atmospheric refraction. The result of the calculation, for land of various conductivities and for sea, is shown in Fig. 5 together with losses for higher angles calculated from Equation (2).

The ground-loss corrections shown in Fig. 5 are valid provided the ground is level and reasonably uniform for several kilometres in the direction of propagation. This condition may not be satisfied if the transmitter or receiver is situated near the sea or on the edge of a sea inlet, or if the aerial is situated on sloping ground or on a hill or cliff. The ground loss which arises in such circumstances is considered in detail in Reference 6.

On single-hop paths involving diffraction around the curvature of the Earth, it is reasonable to assume that the negative radiation angles at both ends of the path are equal if the ground conductivities at the two terminals are similar. When the conductivities are very different, however, this may not be true; for example if one terminal is near the sea and the other is well

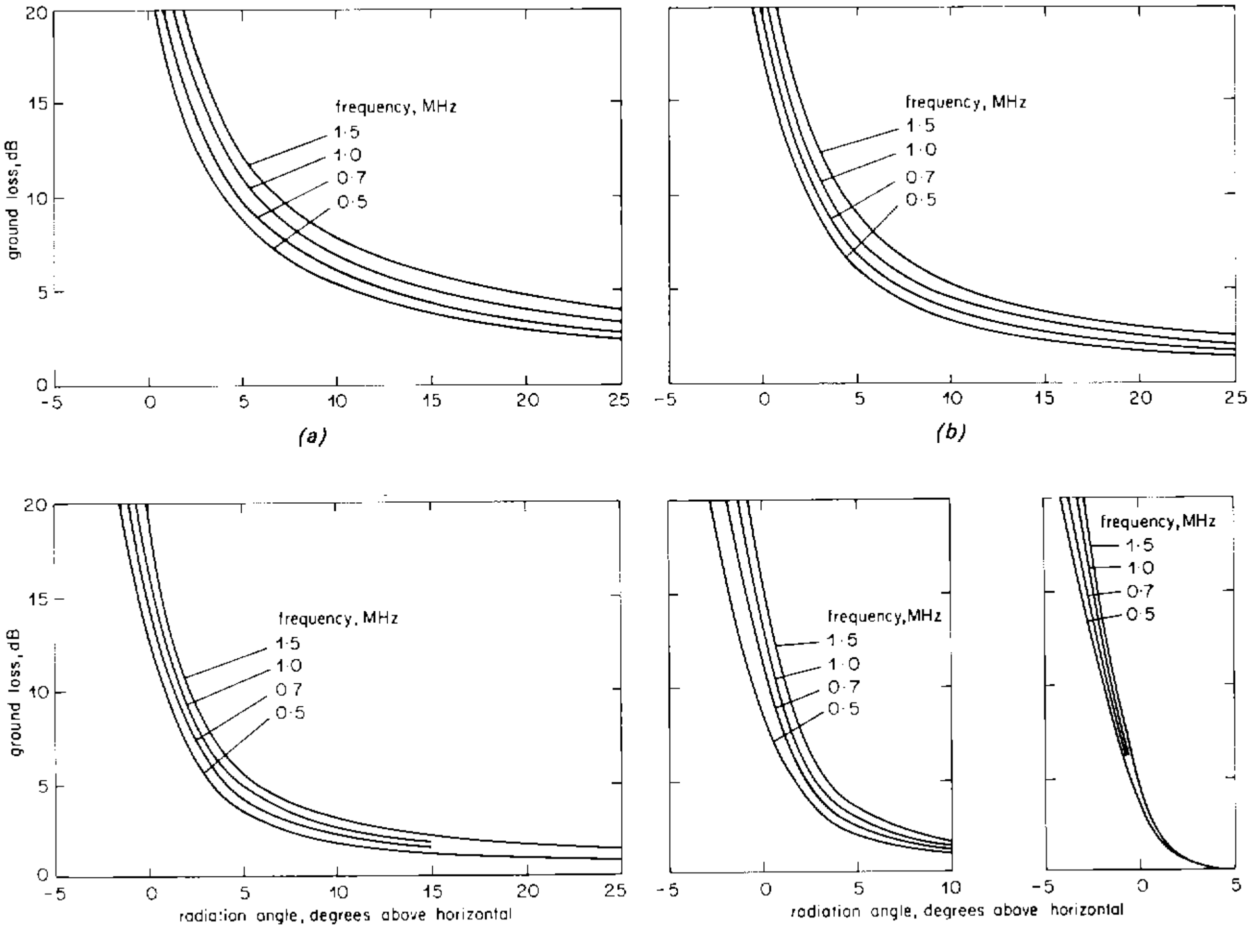

Fig. 5 Ground loss

(*a*) ground conductivity 1 mS/m (*b*) ground conductivity 3 mS/m (*c*) ground conductivity 10mS/m
(*d*) ground conductivity 30mS/m (*e*) sea water

inland, a greater diffraction angle might be expected at the sea terminal. Calculations assuming different combinations of diffraction angles at the terminals have shown, however, that the total ground loss on such paths does not depend critically on the way in which the total diffraction angle is shared between the two ends of the path. It may therefore be assumed to be equally divided between the two ends and given by Fig. 4(*b*) even when the conductivities are dissimilar.

2.6 Polarisation coupling loss at transmitter and receiver

At medium frequencies only the ordinary wave need be considered because the extraordinary wave is greatly attenuated and seldom contributes to the received signal. Waves incident on the ionosphere may be resolved into ordinary and extraordinary waves, the ratio of the power density of the ordinary wave to that of the incident wave being known as the polarisation coupling loss. It has been shown[8] that when the transmitting aerial radiates vertical polarisation, the coupling loss is given by

$$L_c = 10\log_{10}\left(\frac{1 + M^2}{\cos^2\psi + M^2\sin^2\psi}\right) \tag{3}$$

where M is the axial ratio of the ordinary-wave polarisation ellipse and ψ is the angle by which its minor axis is tilted from the horizontal plane. Formulae for calculating M and ψ in terms of frequency, magnetic-dip latitude, direction of propagation and angle of incidence at the ionosphere are given in References 3 and 8.

When the elliptically-polarised ordinary wave which emerges from the ionosphere is received on a loop or open-wire aerial, additional coupling loss is incurred because m.f. receiving aerials respond only to the vertically-polarised components of downcoming waves. This loss is also given by Equation (3) provided M and ψ are the values applicable to downcoming waves.

On short single-hop paths, curves such as those of Fig. 4 of Reference 8 may be used to determine the sum of the coupling losses at transmitter and receiver. On long paths, however, the coupling losses at transmitter and receiver must be calculated separately because the magnetic dip latitudes and directions of propagation (relative to magnetic north) at the terminals will, in general, be somewhat different. In the wave-hop method described here, coupling losses at transmitter and receiver are calculated separately for paths of all lengths.

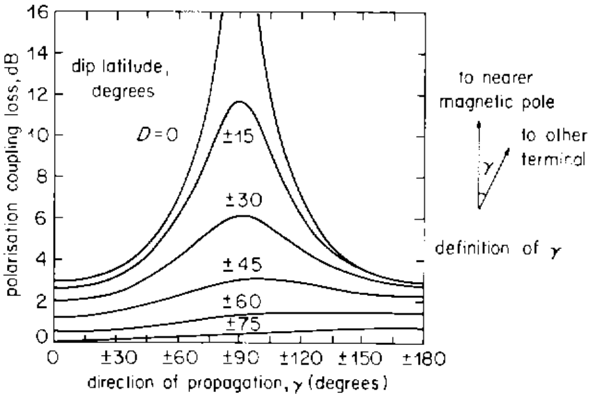

Fig. 6 Polarisation coupling loss at transmitter or receiver

A set of curves which give polarisation coupling losses at individual terminals are contained in Fig. 6. Although polarisation coupling loss depends to some extent on frequency and angle of incidence at the ionosphere, Fig. 6 may be used with negligible error for all frequencies in the m.f. band and for radiation angles up to 20° from the horizontal. The direction of propagation γ is defined in the inset; on short paths the values of γ for the two terminals tend to be complimentary. The 'nearer magnetic pole' referred to in Fig. 6 is the magnetic pole in the same hemisphere as the point where the wave enters or leaves the ionosphere.

2.7 Residual ionospheric absorption

At m.f., ionospheric absorption depends on time after sunset, solar activity, geomagnetism and frequency. This section considers the absorption which remains late at night during periods of low solar activity.

The Earth's magnetic field has two distinct effects on ionospheric absorption. Firstly it is responsible for the auroral zones, regions centred on the magnetic poles where absorption losses are high. Distance from the auroral zone is believed to be of considerable importance; for example, ionospheric losses in North America are known to be greater than in Europe.[9] Secondly the rate of attenuation of a wave in the ionosphere depends on the angle between its direction of propagation and the direction of the Earth's magnetic field, the rate of attenuation being least when these two directions are parallel.

These two effects in combination cause ionospheric losses on NS paths to be less than on EW paths. Long NS paths usually pass through equatorial regions, where propagation tends to be parallel to the Earth's field and auroral effects are absent. On the other hand, EW paths tend to be transverse to the Earth's field, and some EW paths (especially those across the North Atlantic) are close to the auroral zone.

The way in which ionospheric losses would vary if auroral effects were absent has been studied by means of an extensive series of ray-tracing computations, using an ionospheric model assumed to be common to all geographical areas. The model is essentially the same as that derived in Reference 2 for six hours after sunset, but all collision frequencies were halved in order to obtain reasonably good agreement between measured and predicted field strengths for Europe. The ionospheric model is therefore believed to be reasonably accurate for Europe but does not necessarily apply to other parts of the World.

The method described in Reference 3 was used for the ray-tracing computations; regional variations in the strength and direction of the Earth's magnetic field were therefore taken fully into account. A detailed study was made of propagation from hypothetical transmitters situated at Berlin and at Kaduna, Africa; Kaduna lies on the geomagnetic equator. In Europe, ionospheric losses were found to be almost independent of direction of propagation; this is to be expected because the Earth's magnetic field is almost vertical. Losses on EW paths in Europe and Africa were found to be similar;

this is also to be expected because EW propagation tends to be transverse to the Earth's magnetic field at all latitudes. Furthermore, step-by-step ray-tracing computations[3] have shown that most ordinary-wave attenuation occurs near the ionospheric reflection point, where EW propagation is exactly transverse and independent of the strength of the Earth's magnetic field.

Ordinary-wave losses computed for single-hop EW paths are shown by unbroken lines in Fig. 7. Although the losses decrease with increasing frequency, the reduction is less than would be expected if waves of all frequencies followed identical paths; waves of higher frequencies penetrate more deeply into the ionosphere. Fig. 7 shows that losses for low-angle modes tend to be almost independent of hop length because of the very small variation of the angle of incidence at the ionosphere.

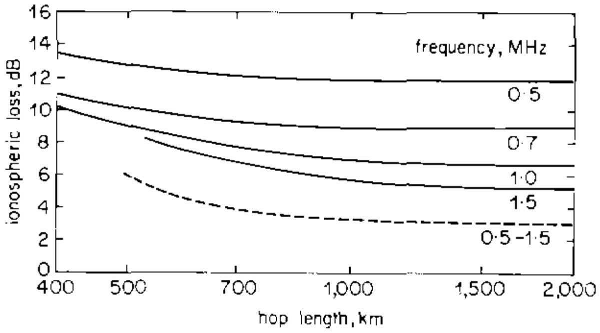

Fig. 7 Computed ionospheric losses
———— East–west propagation at all latitudes ($\theta = 90°$)
- - - - - - North–south propagation at magnetic equator ($\theta = 0$)

Propagation parallel to the Earth's magnetic field was studied by computing losses on single-hop NS paths having reflection points situated at the geomagnetic equator. Although most of the computations involved reflection over Kaduna, some additional computations were made for other equatorial regions since some dependence on the strength of the Earth's magnetic field was expected. The strength of the Earth's field was, however, found to have negligible influence on the computed losses, which were also found to be almost independent of frequency. The results of the computations for equatorial NS paths are shown by the broken curve of Fig. 7.

As mentioned earlier, ionospheric loss depends on the angle θ between direction of propagation and that of the Earth's magnetic field. At the ionospheric reflection point, where most loss is incurred, the values of θ for the EW and equatorial NS paths considered here are 90° and 0 respectively. In the Appendix it is shown that the ordinary-wave loss for any other value of θ is given approximately* by

$$L_i = \frac{L_{90}\sin^2\theta + 2L_0\cos^2\theta}{1 + \cos^2\theta}\,\text{dB} \qquad (4)$$

where L_0 and L_{90} are the losses given by Fig. 7 for $\theta = 0$ and 90° respectively. The value of θ at the ionospheric reflection point is given by

$$\cos\theta = \cos D \cos\gamma \qquad (5)$$

where D is the magnetic dip latitude and γ is the direction of propagation relative to the magnetic NS axis.

In calculating L_i it is convenient to arrange Equation (4) in the form

$$L_i = L_0 + (L_{90} - L_0)G\ \text{dB} \qquad (6)$$

where $G = \sin^2\theta/(1 + \cos^2\theta)$.

Fig. 8(*a*) is a contour chart which gives G in terms of D and γ.

For hop lengths greater than 1200 km Equation (6) may be further simplified to

$$L_i = 3{\cdot}0 + LG\ \text{dB} \qquad (7)$$

where L is the limiting value of $L_{90} - L_0$ for long hops, derived from Fig. 7 and shown in Fig. 8(*b*) as a function of frequency.

Since the losses shown in Fig. 7 were computed with an ionospheric model which may be invalid outside Europe, losses derived from Fig. 7 for other parts of the world should be treated with caution. Near the auroral zone, such losses may have to be multiplied by a factor greater than 1·0, while in tropical regions multiplication factors less than unity may be required.

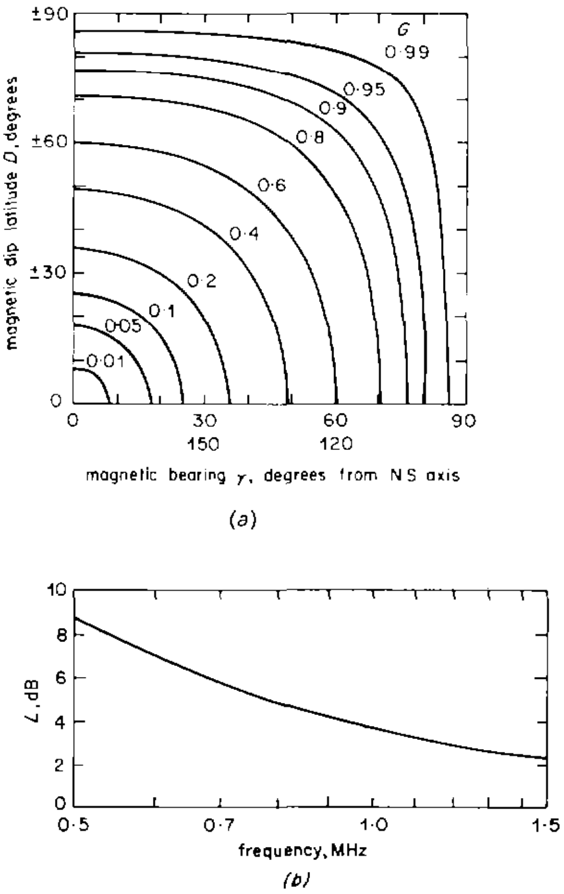

Fig. 8 Ionospheric loss charts
Ionospheric loss per hop = 3·0 + LG dB
(*a*) contour plot of G (*b*) loss factor L

---

* Losses calculated from Equation (4) for paths passing over Kaduna in all possible directions relative to the NS axis have shown good agreement with losses computed for the same paths by ray-tracing.

2.8 Intermediate reflection loss

Intermediate reflection loss on multi-hop paths depends on the polarisation of the downcoming wave, the polarisation of the wave accepted by the ionosphere at the next hop, and on the ground constants. There are three situations in which the loss may be high:

1. In temperate latitudes when the downcoming wave is incident at the Brewster angle, because the ordinary wave is essentially vertically polarised.
2. For East–West propagation with sea reflection at 45° dip latitude, when the ordinary wave re-enters the ionosphere as the extraordinary wave and is absorbed.
3. For North–South propagation with sea reflection at the magnetic equator, when the ordinary wave is again converted into the extraordinary wave and absorbed.

Intermediate reflection loss is, in general, non-reciprocal, i.e. its value changes if the direction of propagation between two given terminals is reversed. The non-reciprocal effect is most apparent when waves are reflected from land at angles near the Brewster angle, waves propagating towards the west suffering the greater loss. Waves reflected from the sea, however, have similar losses in both directions of propagation.

A general formula for intermediate reflection loss is derived in Reference 8 and quoted in Reference 2.* This loss is a

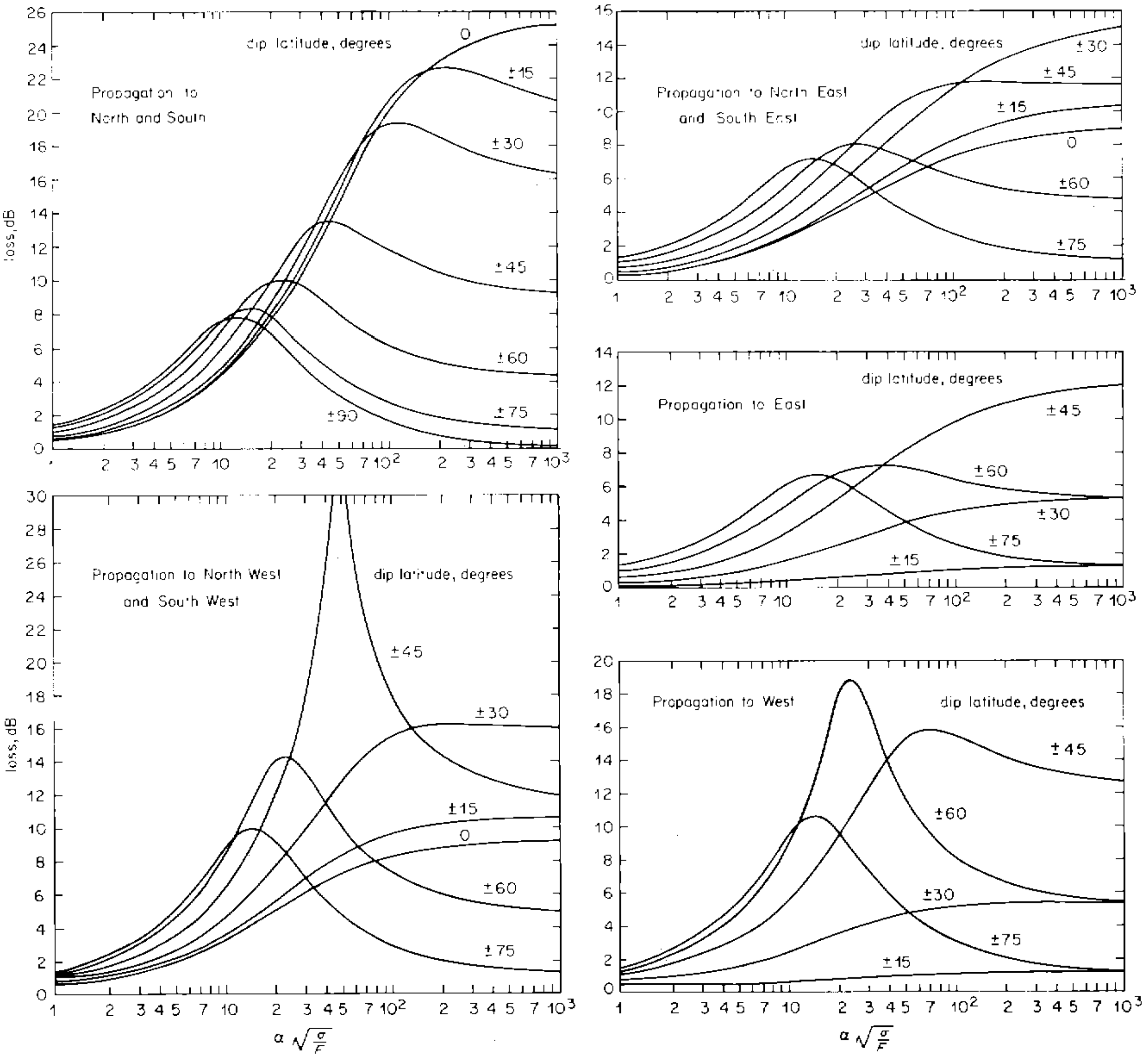

Fig. 9 Intermediate reflection loss
α = angle of arrival, degrees to horizontal
σ = ground conductivity, mS/m F = frequency, MHz
For sea water, σ ≃ 4000mS/m

---

* In Reference 2 the last term in the numerator of the right-hand side of Equation (15) should be $jM_2\cos\psi_2$, not $jM_2\sin\psi_2$.

function of a large number of variables and should, ideally, always be computed. To enable losses to be estimated from curves, however, the following simplifying assumptions have been made:

1. The dip latitude and direction of propagation at the points where the wave leaves the ionosphere, and re-enters after reflection, are the same as the value at the Earth reflection point, except on NS paths near the equator, where an allowance has been made for the change in dip latitude.
2. The frequency is approximately equal to the gyro-magnetic frequency.
3. The angle of incidence at the ionosphere is 80°; this angle is approximately correct for hop lengths greater than 1000 km.
4. The reflection coefficient for horizontally-polarised radiation is $-1{\cdot}0$.

Fig. 9 shows intermediate reflection losses, computed with these assumptions, for five directions of propagation relative to magnetic north and for a range of dip latitudes. The curves are plotted as a function of $\alpha(\sigma/F)^{\frac{1}{2}}$ where α is the radiation angle in degrees, σ is the ground conductivity in mS/m and F is the frequency in MHz. Because of the simplifying assumptions, Fig. 9 should not be used for values of α greater than 10°.

The theory described above makes no allowance for Earth curvature, which would be expected to have a significant effect when α is less than 2°. Although the effect of Earth curvature on intermediate reflection loss has not yet been studied, it is possible that, at grazing incidence, the loss may tend to a value of about 6 dB under all circumstances. Although greater losses would be incurred with negative radiation angles because of diffraction, multi-hop paths involving negative radiation angles are unlikely to contribute significantly to received signals.

2.9 Transmitting aerial correction

When two or more modes of comparable amplitude are present their combined effect must be calculated.

In calculating the strengths of individual modes the transmitter is assumed to radiate with a c.m.f. of 300 V at all vertical angles. Before individual modes can be added, corrections must be made for the vertical radiation pattern (v.r.p.) of the transmitting aerial.

Fig. 10 shows the corrections required for vertical transmitting aerials of various heights radiating 1 kW. The corrections are similar to those given in Fig. 1 of CCIR Report 264–2, but are drawn as a function of radiation angle. No allowance has been made for imperfect ground conductivity in deriving these curves because this is taken account of in the ground loss calculation described in Section 2.5.

After correction the modes are added on a power basis; Fig. 11 may be used for this operation. If more than two modes are significant, Fig. 11 may then be used to add the resultant of any two modes to a third; this process may be repeated until all the significant modes have been accounted for.

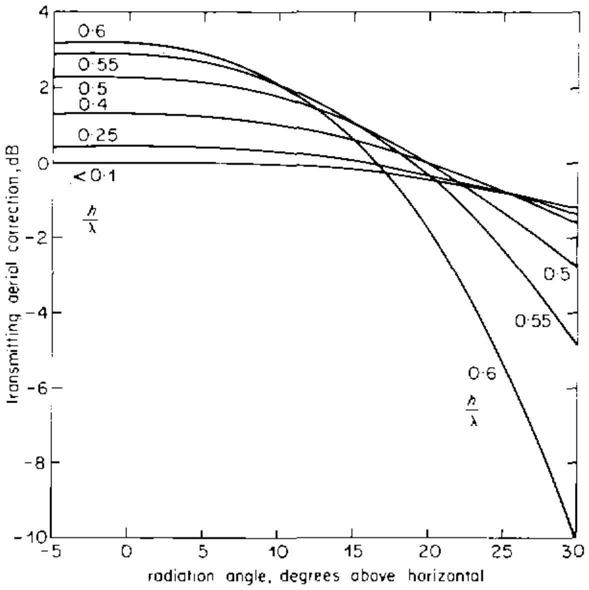

Fig. 10 Vertical transmitting aerial correction
h/λ = aerial height in wavelengths

3 Application of the wave-hop method

To illustrate the use of the wave-hop method, its application to the Rome-Tsumeb (S.W. Africa) path is described in this section. Details of the calculation are given in Table I.

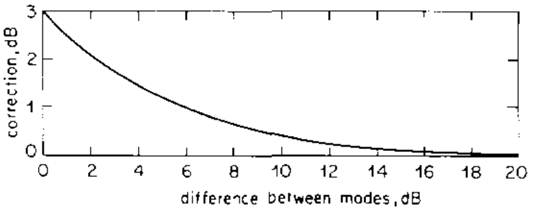

Fig. 11 Chart for mode addition

The path length is 6740 km and Fig. 2 indicates that the 3E, 4E and 5E modes should be considered. The radiation angle for the 3E mode is $-0{\cdot}3°$, however, and a rough estimate shows that it is unlikely to make a significant contribution to the received signal because of the diffraction losses at the terminals and at the intermediate ground reflection points. Detailed calculations were therefore confined to the 4E and 5E modes.

In the table the sum of the unattenuated field strength, the convergence gain and the transmitting aerial correction is referred to as the 'field strength without losses', and all losses are subtracted from this figure. Before calculating individual losses it is an advantage to tabulate all the values of dip latitude (D), ground conductivity (σ) and direction of propagation relative to the magnetic NS axis (γ) which are required. Values of γ are omitted from Table I, however, since this

TABLE 1

Field-Strength Prediction for Rome-Tsumeb Path

Distance 6740 km Frequency 0·845 MHz	Unattenuated field strength 39·0 dBμ Transmitting aerial 0·52λ mast radiators					
Mode			4E			5E
Hop length, km			1685			1348
Radiation angle			2·3°			4·6°
Convergence gain, dB			6·9			4·3
Transmitting aerial correction, dB			2·4			2·3
Field strength without losses, dBμ			48·3			45·6
	D	σ mS/m	Loss dB	*D*	σ mS/m	Loss dB
Ground loss at transmitter	—	15	6·8	—	15	4·0
Polarisation coupling loss	50°	—	2·3	51°	—	2·3
Ionospheric loss (1st hop)	48°	—	4·8	49°	—	4·8
Ground reflection loss	32°	8	3·8	39°	8	8·0
Ionospheric loss (2nd hop)	20°	—	3·3	28°	—	3·6
Ground reflection loss	3°	30	5·6	16°	10	6·8
Ionospheric loss (3rd hop)	−18°	—	3·2	4°	—	3·0
Ground reflection loss	−32°	15	4·8	−15°	15	7·7
Ionospheric loss (4th hop)	—47°	—	4·1	−27°	—	3·6
Ground reflection loss				−38°	15	9·0
Ionospheric loss (5th hop)				−50°	—	5·0
Polarisation coupling loss	− 50°	—	2·3	−52°	—	2·3
Ground loss at receiver	—	15	6·8	—	15	4·0
Total loss			47·8			64·1
Field strength, dBμ, for 1 kW radiated		0·5			−18·5	
Predicted field strength			0·6 dBμ			

particular path is very close to the NS axis over its entire length.

A few points concerning the calculation for the Rome-Tsumeb path are worth mentioning. At Rome the distance to the sea in the direction of propagation is about 30 km, and the transmitter can therefore be regarded as situated on an inland site, assumed to have a conductivity of 15 mS/m. Ground conductivities at the intermediate reflection points and at the receiver were derived from the World conductivity map.[10] The polarisation coupling losses at transmitter and receiver are equal; this is unusual but it arises because the terminals are situated in opposite hemispheres at roughly the same dip latitudes.

Measurements of the Rome transmission were made at Tsumeb in 1971 by the Fernmeldetechnisches Zentralamt (FTZ) of the Deutsche Bundespost. The median field strength measured in June 1971, six hours after sunset at the northernmost ionospheric reflection point, was 37·5 dB relative to 1 μV/m (dBμ). Assuming a transmitter power of 540 kW and an aerial gain, relative to that of a single 0·52λ mast, of 2·3 dB in the direction of Tsumeb, the measured field strength would have been 7·9 dBμ if 1 kW had been radiated from a single 0·52λ mast. The measured field strength therefore exceeds the predicted value by about 7 dB, and the discrepancy would be increased by a further 4 dB if the solar cycle correction for Europe described in Section 5.1 were taken into consideration. The discrepancy may arise because of the presence of sporadic-E layers in equatorial regions; these would tend to reduce both ionospheric and intermediate reflection losses.

4 Comparison of measured and predicted field strengths

About eighty papers and documents which contain information about m.f. propagation at night have been studied and a detailed comparison between predicted and measured field strengths has been made. Reliable measurements made over considerable periods for 21 European paths, 26 North American paths, 22 Australian paths, 60 paths between Australia and New Zealand and 35 long-distance paths are available, together with measurements made over shorter periods for Asian and African paths, and for paths from Ascension

Island. Extensive measurements have also been made in the USSR. The quantity which is usually measured is the median field strength observed during an hour, or half an hour, centred on a particular time after sunset. As these hourly (or half-hourly) medians vary considerably from night to night, the measured field strength compared with predictions is the value exceeded on 50 per cent of the nights on which measurements were made. Measurements have been standardised to six hours after sunset where necessary and solar activity corrections have been applied to measurements made in temperate latitudes to estimate the values which would be observed at the minimum of the solar cycle.

The measured field strengths for the European paths are the values which were obtained for six hours after sunset when the measurements were subjected to the method of analysis described in Section 5.2. Those for the North American paths[11] were derived by extrapolating regression analyses of the type described in Reference 12 to zero sunspot number; 2·5dB was then added because the measurements were made two hours after sunset. The 2·5dB correction was also added to the Australian[13] and New Zealand[14] measurements for the same reason. The Australian measurements were not corrected for solar activity because they were made at sunspot minimum, but the EBU correction for sunspot number 80 was applied to the New Zealand measurements, full details of which were supplied to the BBC by courtesy of the Australian Post Office.

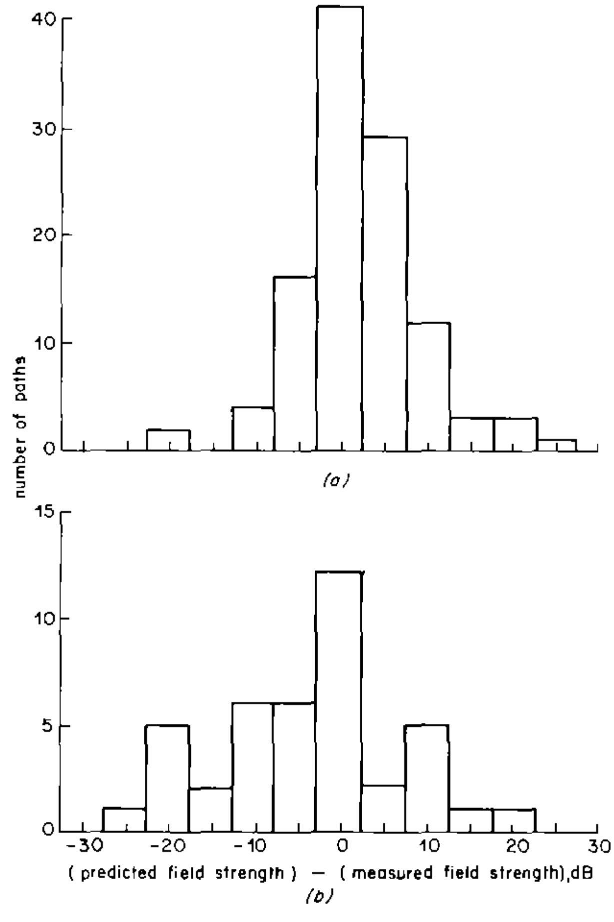

Fig. 12 Distribution of differences between predicted and measured field strengths [illegible]
(*a*) Paths shorter than 3000km
(*b*) Paths longer than 3000km

The long-distance measurements include some of the pre-war measurements from which the so-called Cairo curves were derived; they were derived from Reference 15, where 9dB was subtracted to convert measured quasi-maximum field strengths to median values. No correction was made for solar activity. Results for the long-distance EBU paths are also given in Reference 15. The solar-activity correction was again omitted because it is uncertain what correction, if any, is required for long-distance paths.

Fig. 12 shows histograms of the difference between 152 predicted and measured field strengths. On paths shorter than 3000km, 84 per cent of the differences are less than 10dB and on longer paths 66 per cent of the differences come within this range. Some of the larger discrepancies may be caused by uncertainties about effective ground conductivities at transmitting and receiving sites, and at intermediate ground reflection points.

5 Solar-cycle, diurnal and random variations

The wave-hop method described in Section 3 predicts the median field strength six hours after sunset when solar activity is least. The quasi-maximum field strength, or the field strength at some other time of night or point in the solar cycle, may be estimated from the predicted value by means of corrections discussed in this section.

5.1 Solar-cycle variation

Solar activity increases ionospheric absorption loss at m.f. An analysis of measurements made in Europe[12] has shown that, as a consequence, field strengths are reduced by $Rd \times 10^{-5}$dB, where R is the sunspot number and d is the path length in km. Somewhat greater field-strength variations are observed in North America[16] and Australia,[17] presumably because they are close to the auroral zones. Measurements made on twenty-six North American paths[11] have been analysed by the method described in Reference 12 and the results show that the solar-cycle variation is approximately double that in Europe.

In general it would seem that field strengths estimated for minimum solar activity by the method described in Section 2 should be reduced by KRddB, where K is a factor which may prove to be a function of distance from the auroral zones. In Europe, for example, K is equal to 10^{-5} and in North America it is about twice this value.

5.2 Diurnal variation

The prediction method described in Section 3 estimates the field strength six hours after sunset. It is well known that m.f. sky-wave field strengths are lower nearer to sunset, and at sunrise.

In order to study the diurnal variation, median field strengths measured by the EBU during half-hour periods throughout the night on about twenty European paths were classified by a computer according to the time after sunset, or before sunrise, at which the measurements were made. The

EBU correction for solar activity was applied to each individual measurement, and the computer then found the field strengths exceeded for 50 per cent of the time during consecutive half-hour periods after sunset or before sunrise. The diurnal variations obtained on all paths were found to be similar to the average variation shown in Fig. 13. Similar variations have been observed in Australia[13] and India.[18] Fig. 13 also agrees well with variations observed on very long paths, provided the time reference is local time at the hop which controls the onset of night-time propagation, or the commencement of day-time propagation.

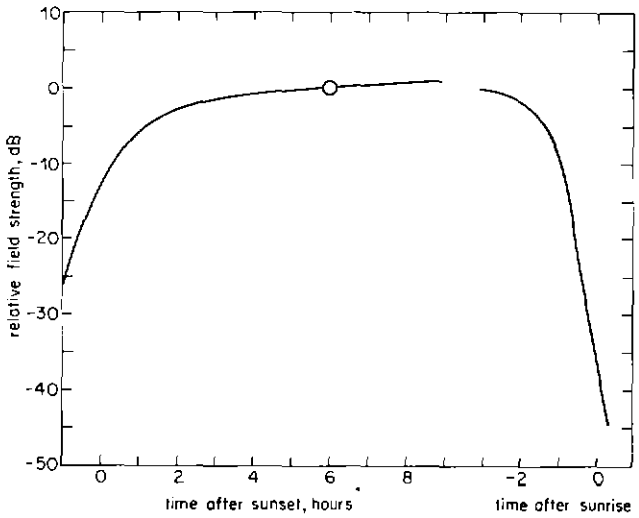

Fig. 13 Diurnal variation

The reference times are the times of sunset and sunrise at sea level

Fig. 13 may be used provisionally to derive field strengths for any time during the night from predictions for six hours after sunset or from measurements made at that time. Detailed study of the results of the computer analysis may reveal some dependence of the diurnal variation on both frequency and time of year.

5.3 Random variation

Medium-frequency ionospheric signals fluctuate because the ionosphere is turbulent. When a single E-layer mode predominates the fading rate is slow,* but when two or more modes of comparable amplitude are present the fading rate is much more rapid.

Considerable variation in the median field strength measured during one hour is observed from night to night because of changing ionospheric conditions. The statistic which is usually quoted is the field strength which is exceeded by the hourly median on 50 per cent of the nights of the year at a stated time after sunset. This is the quantity which is predicted by the wave-hop method described in Section 2.

A knowledge of the amount by which this field strength is exceeded for shorter periods is essential. Sufficient information appears to be available for reliable estimates to be obtained, but this aspect has not yet been studied in detail.

6 Propagation to short distances

The wave-hop method described in Section 2 is intended for distances greater than 500km. It cannot be used for shorter distances in its present form because high radiation angles are beyond the range of validity of many of the curves.

Experience with anti-fading mast radiators suggests that the reflection coefficient of the ionosphere in Europe rises to a maximum value of about −10dB late at night, at all frequencies in the m.f. band. Thus the maximum field strength which is likely to be observed in Europe may be estimated from the unattenuated field strength given in Fig. 2 by subtracting 10dB, the appropriate reflecting layer or layers being determined by reference to Fig. 1(*a*). Actual field strengths may sometimes be much lower than values predicted in this way, especially when reflected waves are about to penetrate the E-layer.

Of the 10dB of residual attenuation, 4–6dB is accounted for by polarisation coupling loss and the remainder is due to ionospheric absorption. In other temperate latitudes the polarisation coupling loss will be similar but the ionospheric absorption may be significantly different. In tropical latitudes, polarisation coupling loss will be low on North–South paths and high on East–West paths unless transmissions are radiated from horizontal aerials, discussed further in the next section.

7 Horizontal transmitting aerials

In the prediction method described in Section 2 the transmitting aerial is assumed to be vertical. Horizontal aerials are sometimes used for short-distance sky-wave broadcasting, however, and their use calls for some modifications to the prediction method which are discussed in this section.

The principal factors which must be taken into consideration are the change in polarisation coupling loss and the effect of finite ground conductivity. Once the wave has entered the ionosphere its propagation is independent of the transmitter which excited it, and no further modifications to the preferred method are required.

In general, horizontal aerials radiate elliptical polarisation and the calculation of polarisation coupling loss is complicated. The calculation is, however, relatively simple in the following situations:

1. At the high angles corresponding to the service area, where the radiation is essentially plane polarised. In European and other temperate latitudes the total coupling loss for both ends of the path will be 4–6dB, as with vertical transmitting aerials. In tropical latitudes the polarisation coupling loss at the transmitting end of the path will be low provided the axes of the horizontal dipoles lie in a magnetic North–South direction; if they lie East–West, however, the coupling loss will be very high.
2. In the 'broadside' directions, where the radiation is horizontally polarised. For low-angle radiation, the polarisation coupling loss at the transmitting end of the path may be derived by adding 1dB to the values shown in Fig. 4 of Reference 19.

---

* The number of deep fades per hour is about ten times the frequency in MHz.

3. In the 'end-on' directions, where the radiation is vertically polarised and the coupling loss is exactly the same as that calculated for vertical aerials, described in Section 2.6

At low angles the effect of finite ground conductivity and Earth curvature must be taken into consideration. In the 'end-on' directions, finite ground conductivity increases, rather than decreases, the strength of low angle radiation compared with that which would be observed if the ground were perfectly conducting.[19] The effect of Earth curvature has not yet been studied.

Since the prediction method is based on a semi-isotropic transmitting aerial whose c.m.f. is 300V, curves similar to those of Fig. 10 must be used to correct for the v.r.p.s of horizontal transmitting aerials. Beyond the service area, multi-hop high-angle F-layer modes may predominate because horizontal aerials radiate more strongly at high angles.

8 Discussion

The wave-hop method relies on the calculation of as many of the factors which control m.f. ionospheric propagation as possible. Errors are therefore mainly caused by uncertainty about those factors which cannot be calculated but must be derived from measurement. The principal source of error is lack of knowledge about the variation of ionospheric absorption with latitude and with solar activity. Uncertainty about ground conductivities also leads to errors, especially when low-angle modes are involved.

To obtain more precise information about ionospheric absorption, a detailed comparison of predicted and measured field strengths on paths of about 1000km needs to be undertaken. If this can be done for as many regions as possible, a world-wide picture of the variation of absorption should result. It may be possible to incorporate this variation in the prediction method, possibly as an ionospheric-loss multiplication factor which depends on geographical location.

Application of the wave-hop method tends to be laborious and time-consuming, especially when long-distance paths are concerned. To facilitate its use it may be desirable to translate it into a computer program, especially as some factors, such as intermediate ground reflection loss, are more conveniently obtained by computation. A disadvantage, however, is that a world map of ground conductivity would have to be stored in the computer, together with less detailed information about the strength and direction of the Earth's magnetic field. An alternative would be to use the method to calculate propagation curves for typical conditions; this approach may be quite satisfactory for distances up to about 3000km.

9 References

1. CCIR Report 265-2, Section 2.
2. Knight, P. M.F. propagation: the behaviour of the normal ionosphere during the night and at sunrise. BBC Research Department Report 1971/22.
3. Olver, A. D., Lyner, A. G. *and* Knight, P. 1971. A computer programme for calculating sky-wave field strengths at medium frequencies. *EBU Rev.*, 1971, **125A**, pp. 18–27.
4. Bradley, P. A. 1970. Focusing of radio waves reflected from the ionosphere at low angles of elevation. *Electron. Letters*, 1970, **6**, 15, pp. 457–8.
5. Rotherham, S. 1970. Ground-wave propagation at medium and low frequencies. *Electron. Letters*, 1970, **6**, pp. 794–5.
6. Knight, P. *and* Thoday, R. D. C. 1969. Influence of the ground near transmitting and receiving aerials on the strength of medium-frequency sky-waves. *Proc. IEE*, 1969, **116**, 6, pp. 911–19.
7. Wait, J. R. *and* Conda, A. M. 1958. Pattern of an antenna on a curved glossy surface. *IRE Trans. Antennas and Propag.*, 1958, **AP–6**, 4, pp. 348–59.
8. Phillips, G. J. *and* Knight, P. 1964. Effects of polarisation on a medium-frequency sky-wave service, including the case of multi-hop paths. *Proc. IEE*, 1965, **112**, 1, pp. 31–9.
9. Barghausen, A. F. 1966. Medium-frequency sky wave propagation in middle and low latitudes. *IEEE Trans. Broadcasting*, 1966, **BC–12**, 1, pp. 1–14.
10. Albrecht, H. J. 1970. Geographical distribution of electrical ground parameters and effects on navigational systems. AGARD Conference Proceedings No. 33, pp. 337–47 (1970).
11. Long term sky-wave field strength measurements in the 550–1600kHz frequency band. FCC Report No. R-7103, 1971.
12. Drewery, J. O. *and* Knight, P. Variation of medium-frequency sky-wave field strength with solar activity in Europe. BBC Research Department Report 1971/11.
13. Medium frequency sky-wave field strength predictions for Australia. CCIR Doc. VI/205, 23 June 1966.
14. Sky-wave propagation at frequencies below 1500kHz. CCIR Doc. VI/5, 26 August 1969.
15. Long-distance propagation in Band 6 (MF). CCIR Doc. 6/97, 6 April 1972.
16. Barghausen, A. F. *and* Lillie, D. A. 1965. Some evidence of the influence of long-term magnetic activity on medium frequency sky-wave propagation. *Proc. IEEE*, 1965, **53**, 12, pp. 2115–6.
17. Dixon, J. M. 1960. Some medium frequency sky-wave measurements. *Proc. Instn. Radio Engrs., Australia*, 1960, **21**, 6, pp. 407–9.
18. Medium frequency sky-wave service (All India Radio). ABU Doc. E/21, Engineering committee meeting, Shiraz, Iran, October 1972.
19. Knight, P. M.F. propagation: the reduction of interference by the use of horizontal-dipole transmitting aerials. BBC Research Department Report No. 1972/21.
20. Knight, P. 1972. Radio-wave propagation in the lower ionosphere during the night, at medium and low frequencies. Ph.D. Thesis, London University, January 1972.
21. Ratcliffe, J. A. 1959. The magneto-ionic theory. Cambridge University Press, 1959.
22. Knight, P. The polarisation of waves reflected from the ionosphere. BBC Research Department Report No. 1969/31.

10 Appendix

Ionospheric attenuation of the ordinary wave

It has been shown[20] that the imaginary part χ of the complex refractive index of a wave of any polarisation traversing the lower ionosphere is given by

$$\chi = \frac{XZ}{4(1+RR^*)}\left[\frac{2\sin^2\theta}{1+Z^2} + \frac{(\cos\theta + jR)(\cos\theta - jR^*)}{(1+Y)^2+Z^2} + \right.$$
$$\left. + \frac{(\cos\theta - jR)(\cos\theta + jR^*)}{(1-Y)^2+Z^2}\right] \quad (8)$$

where the asterisk denotes the complex conjugate and the symbols have the usual meanings ascribed to them in the magneto-ionic theory.[21] The rate of attenuation of the wave is described by the equation

$$\frac{\mathrm{d}P}{\mathrm{d}z} = -2kP\chi \quad (9)$$

where P is the power density of the wave, z is distance in the direction of propagation, $k = 2\pi/\lambda$ and λ is the wave-length

The polarisation of the ordinary wave is given approximately by

$$R = -j\cos\theta \quad (10)$$

if (1) the frequency is close to the gyromagnetic frequency (as at m.f.) and (2) electron-molecule collisions have a negligible effect on polarisation (justified elsewhere[22]).

Equation (10) is exact when $\theta = 0$ and 90° and it may be shown that Equation (8) then simplifies to

$$\chi_0 = \frac{XZ}{2[(1+Y)^2+Z^2]} \quad \text{when } \theta = 0 \quad (11)$$

$$\chi_{90} = \frac{XZ}{2(1+Z^2)} \quad \text{when } \theta = 90^\circ \quad (12)$$

If Equations (10), (11) and (12) are substituted in Equation (8) it may be shown that

$$\chi = \frac{\chi_{90}\sin^2\theta + 2\chi_0\cos^2\theta}{1+\cos^2\theta} \quad (13)$$

Equation (13) applies to every point on the path. Since the variation of θ along the path is relatively small in the region where most ionospheric absorption takes place, θ may be assumed to be constant with little error. If Equation (13) is substituted in Equation (9) and then integrated, it may be shown that the total ionospheric loss for any given value of θ is given by

$$L_i = \frac{L_{90}\sin^2\theta + 2L_0\cos^2\theta}{1+\cos^2\theta}\,\mathrm{dB} \quad (14)$$

where L_0 and L_{90} are the ionospheric losses in dBs when $\theta = 0$ and 90° respectively.

Acoustically Absorbent Studio Screens

A. N. Burd
Formerly of Research Department, now with Sandy Brown Associates

D. G. M. Stripp
Radio Broadcasting Operations

Summary: The article describes the development of acoustic screens which can provide sufficient acoustic isolation between performers to make multi-microphone production techniques, with dance bands and 'pop groups', feasible even in studios with relatively live acoustics.

1 The problem

Symphony orchestras have evolved a structure which gives an internally balanced sound suitable for an audience in a concert hall and stereo recordings of this sound can usually be made with a single carefully placed stereo microphone or stereo pair.

Such simple microphone arrangements are rarely used for dance orchestras and pop music because these use many microphones to produce a sound for the listener which may differ considerably from the sound in the studio. The evolution of multi-microphone techniques over many years has encouraged producers and arrangers to create new types of sound balance in which it is quite common for a quiet instrument such as a solo flute to appear louder than a powerful brass section of a dozen players.

Even before stereo recording became commonplace, there arose a practice of using one or more microphones per instrument (or group of similar instruments) and frequently of modifying the individual sounds so obtained by means of controls of frequency response, presence filters, artificial reverberation, tape delay, compression and so on. A large light orchestra may involve the use of forty, fifty or even more microphones and the many ancillary controls can require a mixing desk with over 1300 controls.

Difficulties arise because a microphone placed to pick up sounds from one instrument will also pick up some sounds from other instruments; for example, the artificial reverberation which is often added to the output of violin microphones will destroy a desired 'tight', 'dry' drum sound if the drums are significantly audible on the violin microphones. The problem of cross pick-up of unwanted sound is least in a 'dead' (non-reverberant) studio but this environment makes it difficult for string players to hear themselves and each other and so produce a good string tone and ensemble.

The coming of stereo recording has produced a need for greater acoustic separation between sections of an orchestra, preferably without the necessity for an overall dead acoustic if strings are involved. A solution to this problem which is used by some gramophone record companies and overseas broadcasters, is to record the brass and percussion players in a dead acoustic on to several tracks of a multi-track tape recorder and later mix in the strings in a live (reverberant) studio, their conductor hearing the rhythm tracks on headphones in order to ensure synchronism. This multi-track procedure can be very time-consuming and is not commonly used in the BBC.

The acoustic separation within an orchestra can be enhanced by the use of acoustic screens but the type in common use in the BBC provided too little absorption to prevent the spill of percussion sounds into a live studio. What was needed was a screen which would not only attenuate sounds transmitted through it but would also be sufficiently absorbent to minimise undesirable reflections.

2 Design restrictions

2.1 Operational requirements

It was decided that the new screens should:

1. Absorb sound efficiently over a broad band of frequencies;
2. provide the best possible isolation between points on opposite sides;
3. be reasonably easily moved by one man and;
4. stand up to operational wear and tear.

2.1.1 Acoustic absorption

To absorb sound (that is, to inhibit sound reflection but not necessarily to inhibit transmission through the material) down to the low frequencies produced by percussion instruments necessitates either a considerable depth of porous sound material or a resonant device in which an impermeable membrane encloses a volume of air. The resonant absorber operates over a limited frequency range while the porous absorber would have to be excessively deep to be effective at low frequencies.

An alternative approach to the construction of a broadband absorber has been described by Melling[1] who suggests the use of a permeable membrane over a porous absorber. The membrane provides the low-frequency absorption while the porous material provides absorption of the higher frequencies to which the membrane is permeable. This was the approach adopted.

2.1.2 Acoustic isolation

Sound travels from one side of the screen to the other by a combination of transmission through the porous material and diffraction around the edges of the screen.

A screen having dimensions of 1 m × 2 m × 150 mm was considered the largest that was practicable and this meant that under likely conditions of use the path-length from a sound source to a microphone on the opposite side of the screen might be 1 to 1·5 m. From this a mid-frequency diffraction loss of some 15 dB might be expected.

The transmission loss through the screen should thus not be less than 15 dB. The transmission loss through a layer of porous material 150 mm thick would not exceed 5–10 dB at mid-frequencies so a central panel or septum was required, dividing the porous material into two layers approximately 75 mm thick. This septum itself must provide not less than 10 dB attenuation.

2.1.3 Handling characteristics

So that one man should be able to handle the screen, its weight should not exceed 40 kg. Furthermore, it should not be easily damaged and should not cause dust problems – factors which suggested the use of polyurethane foam as the filling material.

3 Selection of materials

3.1 Frame

Timber provides an excellent combination of strength, reasonable weight and resistance to damage and was considered the best material for the frame.

3.2 Dividing septum

A single layer of 12 mm-thick insulation board (often called soft board or building board) makes up the central dividing panel. The material provides sound attenuation of some 15 dB and, in addition, useful resistance to deformation of the frame.

3.3 Absorptive filling

As a large number of these screens would be required, the cost of the filling material had to be considered as well as its acoustic performance. Acoustic tests were carried out to ensure that the optimum choice was made.

Polyurethane foam is sufficiently homogenous for representative measurements of absorption to be derived from tests on small samples of the material. Using the stationary-wave tube method normal-incidence absorption coefficient measurements were made on a number of combinations of foam material and from these measurements the optimum arrangement of foams was chosen.

Fig. 1 curve (*a*) shows the absorption characteristics of the chosen foam combination, that is, 50 mm of light foam covered by 25 mm of a denser foam which has a high resistance to the flow of air. Other alternatives, such as the provision of an air space behind a layer of dense foam or the use of a complete layer of dense foam, were discarded as either impracticable or too costly; for example the cost of a 75 mm layer of dense foam would have been 2·5 times greater than the chosen combination of foams.

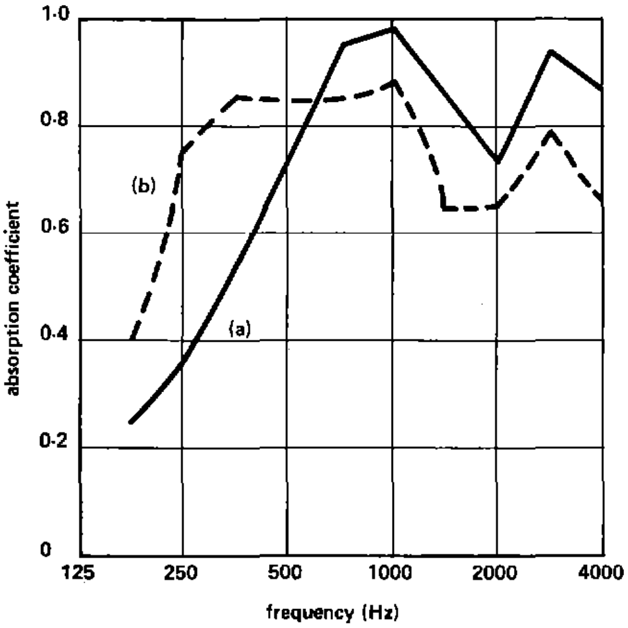

Fig. 1 Absorption characteristic of chosen foam combination: (*a*) with plain face; (*b*) with p.v.c.-sprayed face

Fig. 1 curve (*b*) shows the absorption characteristics of the chosen foam combination with its face sprayed with a p.v.c. coating. The coating had the desired effect of markedly improving the low-frequency absorption and it was thought to be worthwhile to make prototype screens which had one side sprayed in this way.

3.4 Covering material

The p.v.c.-sprayed face was considered adequately covered but it was essential that the remaining plain face be covered; for this an open-weave, plastic-coated fabric having negligible effect on the absorption was chosen.

4 Performance of the prototype screens

Fig. 2 shows a section through the final form of screen. Ten screens were made for field trials and conventional (ISO) reverberation room tests* were carried out during construction.

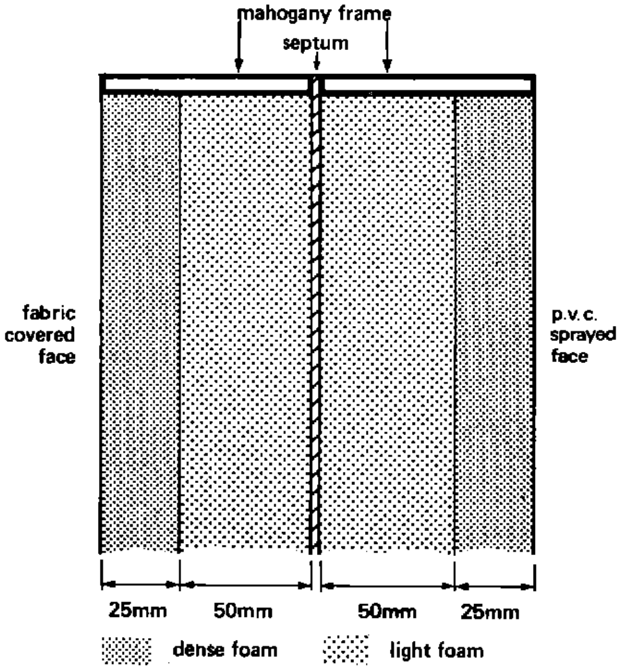

Fig. 2 Section through final form of screen

Fig. 3 curve (*a*) shows the absorption of the fabric-covered face. The screens were laid empty side downwards to expose the foam-filled face; the presence of the septum, and the void backing it tended to enhance the low frequency absorption slightly.

Fig. 3 curve (*b*) gives an indication of the absorption of the p.v.c.-sprayed face. The other side of the screen was not emptied but laid face downwards; some small contribution to the absorption may result from inevitable lack of sealing between the frame and the floor. The results showed a'peaky' low-frequency absorption and a marked reduction of middle-frequency and high-frequency absorption and this poor performance was confirmed in studio evaluation. The difference between these results and the stationary-wave tube measurement (section 3.3) is presumed to be due to difficulties in controlling the thickness and porosity of the sprayed coat.

Fig. 3 curve (*c*) shows the absorption when the screens were stood vertically in the reverberation room. The absorbing area used in calculation is the area of one face of the screen and not a value of twice this which would correspond to the total area of absorber exposed.

5 Studio evaluation

In view of the promising measured performance a series of trials was carried out in studios where multi-microphone working was known to be a problem because of live acoustic conditions.

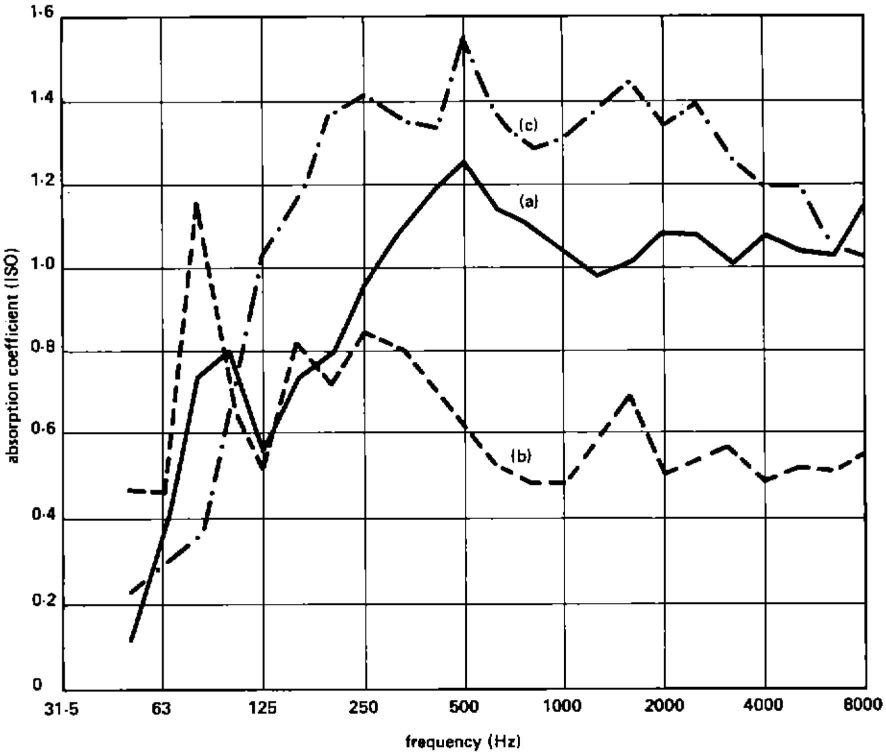

Fig. 3 Results from reverberation room measurements of absorption coefficients: (*a*) fabric-covered face; (*b*) p.v.c.-sprayed face; (*c*) both faces exposed

---

* BS3638:1963 Method for measurement of sound absorption coefficients (ISO) in a reverberation room.

The design of the screens allows them to be mounted with either a long or short edge vertical and to be placed together so that there is a good fit both between adjacent panel edges and to the floor. The studio tests included an arrangement of the panels into a percussion booth where panels with their long edge vertical formed three sides of a square, while further panels with their long edge horizontal made the fourth side, allowing the musician to see the conductor.

The percussion booth arrangement proved very satisfactory despite the lack of a roof or clear plastic window to complete the booth. Spill of sound from the drum kit was not troublesome while the same, very effective, absorbent surfaces prevented internal reflections in the booth which would have produced a 'boxy' sound from the drums. This particular failing is common in a percussion booth made from conventional screens.

The relatively poor middle-frequency and high-frequency absorption of the p.v.c.-sprayed face which had been shown by the measurements was confirmed in practice and the added low-frequency absorption was not detectable and so the p.v.c.-sprayed coating will not be used in future.

6 Developments

In addition to the double-sided version (wide-band absorber both sides) which has been made in heights of 1 m, 1½ m and 2 m, a version is being made with one face absorbent and the other reflective. This will be helpful in drama studios where a range of acoustic environments is needed, and it may also help the internal balance of an orchestral string section by providing some local reflections.

Arrangements are being made to provide a roof for a percussion or vocal booth and if necessary a transparent window section.

7 Conclusions

The prototype screens have proved effective in studio use and make single-session, multi-microphone stereo production techniques possible in 'live' studios. The screens provide a practical contribution to the minimising of production time and cost without sacrificing audio quality.

8 Reference

1. Melling, T. H. A note on the behaviour of coated polyurethane wedges: theoretical and experimental. I.S.V.R. Technical Memorandum.

An Adaptive Receiving System for U.H.F. Television

D. E. Susans, C.Eng., M.I.E.E., M.I.E.R.E.
Research Department

Summary: This article describes work which was carried out from 1971 onwards on the design of an adaptive receiving system intended for use at u.h.f. television transmitting stations which are fed by rebroadcast links, in cases where special measures are needed to reduce co-channel interference. The system automatically adjusts the directional pattern of the receiving array to place minima of response on bearings from which interfering signals are received.

Two adaptive systems are described. The first, although successful, was designed to reject only a limited range of frequencies. The second was a development and was designed to respond to interference in the demodulated video signal in the range 5 Hz to 5·5 MHz and to reject up to six interfering signals simultaneously.

Many of the problems encountered in the design and operation of the equipment are described. These problems were not completely solved before work on the project was stopped because changing requirements removed the need for a system of this complexity.

1 Introduction

When providing a u.h.f. service in which the majority of transmitters obtain the programme by means of a rebroadcast link, i.e. by receiving the transmission of another broadcast transmitter, there will inevitably occur some cases where the provision of a link is difficult due to the presence of interfering transmissions within the received channel.

In these circumstances several approaches to the problem may be possible. For example, one or more s.h.f. links may be used to bring the signal from a more favourable receiving site, or a very large high-gain aerial array may be used. In some cases, such as the Channel Islands, s.h.f. links would need to be sited at sea which may be technically or economically impracticable, as would be a sufficiently large and rigid high-gain aerial structure on land. One further method is to use a simpler aerial structure together with an adaptive receiving system such as that suggested by Widrow *et al.*[1] This system automatically makes continuous adjustments to the receiving aerial directivity pattern so as to discriminate against interfering signals. Although such an adaptive system can reject only a limited number of sources of interference at any one time, the directions of rejection are continuously adjusted for the prevailing conditions. It can thus deal with many possible sources of interference including those not envisaged when the aerial system was built and can adjust for the presence of different interfering signals at different times as a result of propagation changes. The system will also adjust for aerial changes such as differential feeder expansion with temperature which would de-phase the elements of a fixed array, and can even operate (with some reduction in performance) if part of the aerial system is damaged or temporarily removed.

As an initial step, a computer simulation of a simple adaptive system was undertaken in order to investigate the adaptive process.*

This work gave useful information on a number of aspects of the system but it was decided at that stage that the construction of an experimental equipment would be more instructive than fuller computer studies. This was because of the impossibility of predicting all the instrumental deficiencies of a working equipment and because to take into account some of these deficiencies (such as stray coupling between aerials and feeders and non-linearities in the control elements) would require impracticably complex programming.

The initial experimental equipment[2] was limited to a four-aerial system and was not intended to adapt in the presence of interference whose main component was both below 300kHz and within ±2kHz of any integral multiple (including zero) of half-line frequency. The later equipment[3] attempted to remove these limitations. In addition the number of aerials was increased to eight so as to permit the system to adapt in the presence of up to six sources of interference. Several problems arose with this later equipment (see Section 8) which were not resolved before work was indefinitely suspended whilst investigations were made into other possible means of satisfying the prime requirement for the system.

2 General description

The equipment is required to perform two basic functions: to detect the presence of interference and measure its magnitude, and to manipulate the directivity pattern of the receiving aerial system so as to minimise the pick-up of interference. Because of the nature of a television waveform the first of the two basic functions may be carried out by examining the signal during the synchronising pulses when the transmitted waveform is known and not affected by the picture signal. The second function is achieved electronically by controlling attenuators associated with each aerial unit.

Fig. 1 is a simplified block diagram of an adaptive system. Fig. 2 is the more detailed block diagram of the experimental prototype and will be used as a reference for the following description of the method of operation.

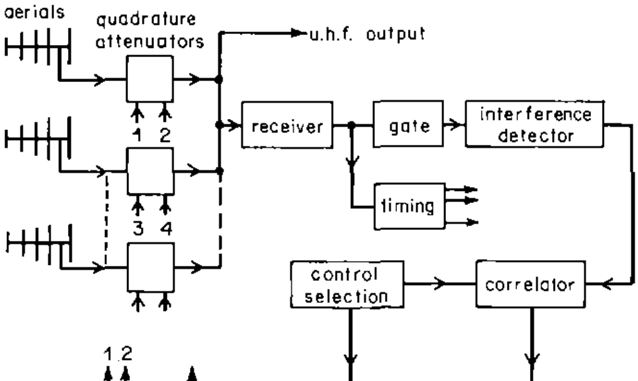

Fig. 1 Simplified block diagram

2.1 Quadrature attenuators

The receiving aerial system comprises a number of separate aerials the outputs of which are fed through individual electrically controlled attenuators (Fig. 2, A_1–A_4) before being combined to form the r.f. signal input to the control-system receiver and the rebroadcast receiver or translator. The system described has been examined using four Yagi aerials but the principle is not limited to any specific number or type of aerials. The amplitude and phase of the contribution of each aerial can be controlled by application of d.c. to the two control ports of the quadrature attenuator. These controls actually operate by varying the amplitude of the in-phase and quadrature components of the aerial output expressed as a complex number. There are thus eight controls in all, two per attenuator.

In operation, trial modifications are made to the control potentials of a randomly-selected number of attenuator controls.[4] This is achieved by adding to the standing control voltages a test waveform consisting of a succession of rectangular pulses at half-line frequency, coinciding, in time and duration, with every other line synchronising pulse of the wanted television signal. Thus line synchronising pulses are received alternately with one directivity pattern of the aerial system – the 'normal' condition – then with the directivity pattern slightly changed by the application of the test waveform to the complex attenuators – the 'test' condition.

2.2 Received signal processing

The output of the control receiver B is fed to a synchronising-pulse separator C and control-pulse generator D to provide the timing and control waveforms for the entire equipment. The receiver output is also fed through gate E, which opens only to pass the line synchronising pulses, to the main error-signal chain. The operation of the error-signal chain is described in more detail in the following sections. For the present brief outline the items F to L may be regarded merely as subtracting a relatively noise-free synchronising pulse from each synchronising pulse plus interference that appears at the output of gate E, thus producing at the inputs to gates M1, M2 a train of interference pulses. These gates pass the 'test' and 'normal' pulses respectively to the comparator N.

2.3 Comparator

This comparator, together with the following integrator Q, assesses the relative levels of interference on normal and test line synchronising pulses for one field period (20 msec). If at the end of this period the change of directivity pattern introduced in the test periods by the test waveform has produced an improvement in the measured interference level, then the appropriate command is fed to the attenuator controls R and the standing control voltages are changed to make the test directivity pattern the new reference condition. If no improvement has been achieved, the previous reference condition is allowed to remain. In either case the test waveform is applied, during the next field period, to a different randomly-selected group of attenuator controls and the process is repeated continuously.

---

* The computer study, and some of the initial electronic design of the experimental equipment, was carried out by A. Brown.

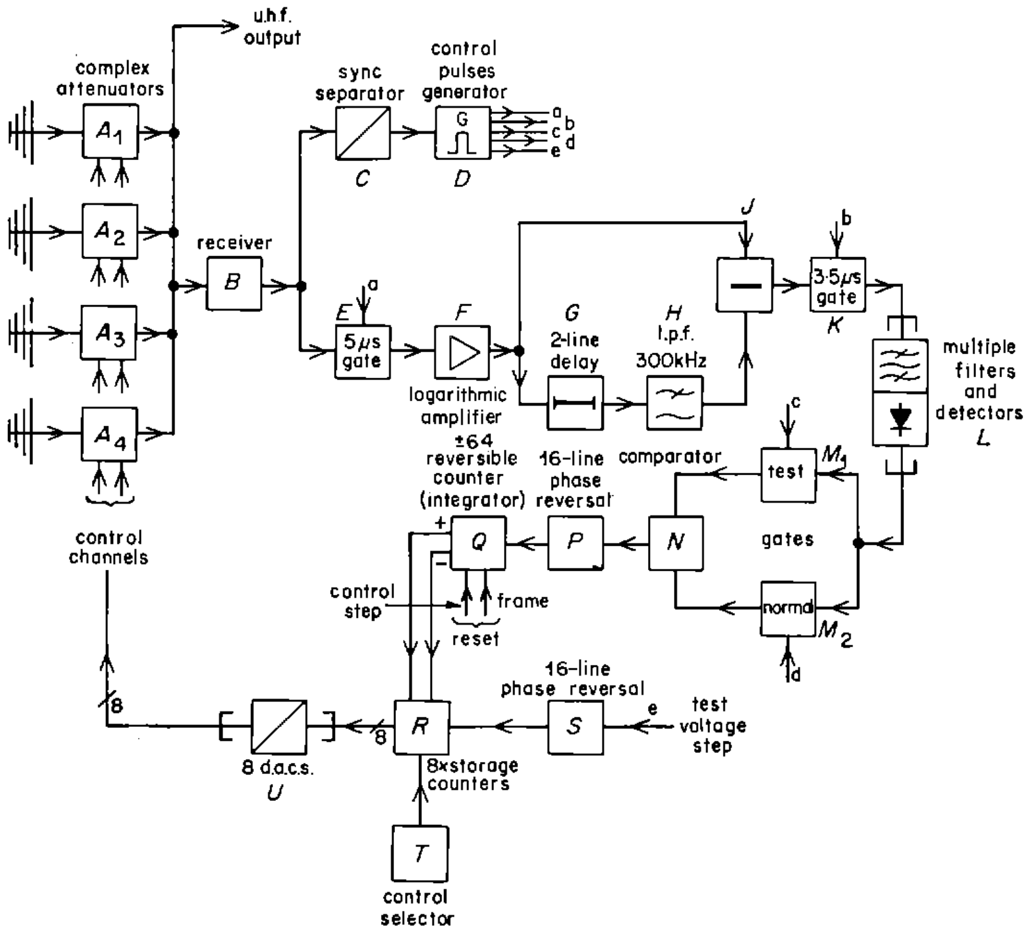

Fig. 2 Block diagram of experimental adaptive receiver

2.4 Sequence generator

The pseudo-random sequence generator T determines which attenuator controls out of the eight should have the test waveform applied and also the polarity of the test pulse at each individual control. Dwelling for 20msec in each condition and with about 3500 different combinations this cycle takes just over a minute to complete. However, in terms of the change of directivity pattern produced, many of these conditions give very similar results and it is not necessary for the equipment to pass through even one complete cycle before a useful degree of adaptation takes place.

3 Detailed description

3.1 Error-signal chain

In the simple system described in the foregoing section, one of the most effective ways of removing interference would be to adjust all the attenuator controls to give zero output. This, unfortunately, would also remove the wanted signal. To avoid this, it is necessary to make the equipment respond not to the absolute interference level but to the signal-to-interference ratio. This is achieved by passing the signal through a logarithmic amplifier, F. The absolute level of interference at the output of this amplifier is proportional to the interference-to-signal ratio at its input. For correct operation of the logarithmic amplifier the d.c. component of the video input signal must be preserved.

It may appear that all that is necessary for detecting interference is to subtract a perfect, locally generated synchronising pulse from the synchronising-pulse plus interference, as obtained at the output of the amplifier F. This, however, would not be satisfactory if the received synchronising pulse were distorted or if the application of the test waveform produced a variation in the level of the wanted signal. Either of these effects could then produce spurious error signals. This is avoided by subtracting, instead, the actual received synchronising pulse, with any accompanying interference, after transmission through a 2-line delay, G and a low-pass filter H as shown in Fig. 2. This method has the unwanted side effect in that interference frequencies below the filter cut-off frequency of 300kHz which are close to multiples of half-line frequency or zero are also cancelled in the subtraction process. No error signal is therefore produced by interference in these narrow frequency bands and the system will not adapt.

For other frequencies below 300kHz, and all frequencies above, the interference is not cancelled and the normal error signal output is obtained. It is not possible to reduce the cut-off frequency of the filter as significant distortions to the synchronising pulses occur in the frequency range below

300kHz. These must be cancelled so as to avoid any consequent reduction in system sensitivity.

The error signal from the subtraction unit passes through a 3·5μs gate to remove the leading and trailing edges of the pulse together with any transient distortion that these edges may have acquired in transmission or in earlier stages of the equipment.

The subjective impairment caused by coherent interference on a television picture is greater than that caused by random noise of the same peak amplitude. Since the adaptive system assesses interference and noise on the basis of their peak amplitudes it is necessary to provide some means to reduce the sensitivity to random noise relative to coherent interference in order that the system may adapt to a condition close to the subjective optimum. This is achieved in unit L of Fig. 2 by splitting the 5·5 MHz bandwidth of the error signal into a number of narrow bands each with its own detector. The largest of the individual detector outputs is taken as the input to the gates M1, M2. Any c.w. interference will come through one or other of these filters unattenuated but noise will be reduced by the ratio of the filter bandwidth to the overall bandwidth. The narrowness of individual filters is limited by the width of the narrowed synchronising pulses (3·5μs) to about 280kHz (−3dB) overall for bandpass filters. Most of the band is covered with overlapping (at −1dB points) coupled-pair bandpass circuits of this width. In the region of 2·5 and 5 MHz, wider filters are used with reduced gain since the eye is less sensitive to interference at these frequencies. Below 200kHz low-pass filters can be used and these can have a smaller bandwidth with advantage. Low-pass filters of 140, 190 and 280kHz bandwidth are in fact used.

Fig. 3 shows the effect of the multiple filters. The dotted curve represents the ideal weighting for c.w. interference relative to wide-band noise; this was deduced from subjective tests together with the CCIR protection ratio curves.[5] The solid curve shows the weighting curve obtained in this equipment. The full desired weighting of 16dB could not be achieved between 100kHz and 1 MHz because of the wide bandwidth of the filters in this region necessitated by considerations of pulse rise-time.

The type of sampling used in the measurement system does of course give additional notches at integral multiples (including zero) of half-line frequency for all multiples at which less than one cycle of interference appears in each 3·5μs sample. The combined effect of the weighting curve and the sampling notches will be seen in Section 5.4.1.

The output from the multiple detectors is switched by the gates M1, M2 which open on alternate lines, and is stored by peak detectors whose outputs are compared by the comparator N. This comparator determines which of an adjacent pair of error signals is the greater, its output being a pulse which steps a reversible binary counter Q in the appropriate direction. This counter integrates these pulses over one field. Since the peak detectors and comparator may have small errors which would bias the system in one direction, the test pulse is interchanged between even and odd lines at the end of every 16-line period. The polarity of the comparator output is also reversed at the same time to compensate and, by this means, any systematic unbalance in the comparator chain is cancelled out.

3.2 Comparator integrator

At the end of one field period, the sense of the integrator output is determined and if it shows that the application of the test waveform has, on average, produced an improvement, then the standing control voltages on the appropriate aerial controls are adjusted and the test condition becomes the reference condition for the next field period.

Allowing for the field blanking interval, during which inter-

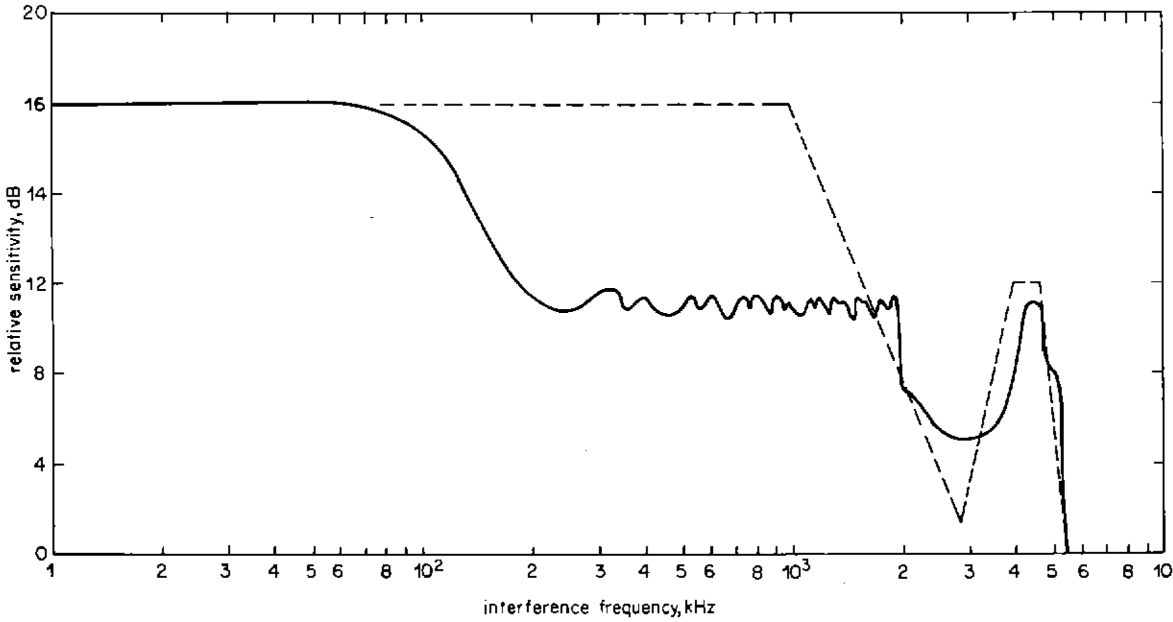

Fig. 3 Sensitivity of filter unit to c.w. interference relative to that to wide-band random noise

- - - - Preferred weighting ——— Measured weighting ference detection is suppressed and the attenuator control selection is changed, and for the periods lost during the 16-line reversal switching, the equipment makes 230 odd/even line comparisons in each field period. Generally, any improvement in signal-to-interference ratio caused by the application of the test waveform is small and the effect of random noise and short-term gain instability in the error-signal chain is such that the algebraic sum of the pulse outputs from the comparator over one field period is within the capacity of the ±64 reversible counter,[6] Q. If, however, the improvement is large, the counter can reach the limit of its range before the end of the field period. In this case, a command signal is immediately given to the aerial attenuator control to revise the reference condition. The counter store is then cleared and counting re-starts; thus up to four command steps can be given in one field period.

3.3 Electrically-controlled quadrature attenuators and r.f. combining unit

It is necessary for the operation of the adaptive system to be able to control both the amplitude and phase of the individual aerial contributions. In the arrangement used, this adjustment is actually obtained by two quadrature amplitude controls. P–I–N diodes are used as control elements.[7] At u.h.f. this type of diode provides a linear resistive element whose impedance can be varied over a wide range (1 ohm to 10000 ohms) by the application of a small, variable, direct current. Both internally generated noise and intermodulation products are very low. Two diodes are used in conjunction with a 3 dB directional coupler to make one quadrature attenuator. The contributions from the separate attenuators are combined by further directional couplers after passing through isolating amplifiers.

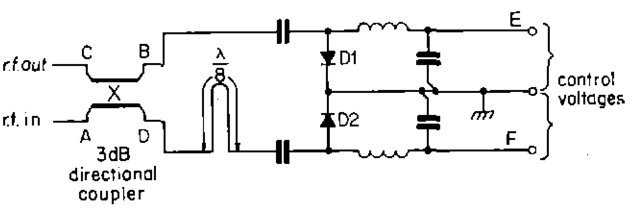

Fig. 4 Quadrature attenuator

The principle of operation of the quadrature attenuator, a circuit diagram of which is given in Fig. 4, is for the incoming signal to be split, by the coupler, into two components equal in amplitude but in phase quadrature. These two outputs are both terminated by p–i–n diodes, D1 and D2, with individual d.c. current controls (E, F) but with one diode fed through an extra eighth wavelength (at midband) of feeder. If the control current through both diodes is adjusted for a perfect match between the diodes and lines (approximately 200 μA) then no power will appear in the fourth arm of the coupler. If one or both of these currents are changed then some of the u.h.f. input signal will be reflected back into the coupler and will appear at the fourth arm, the output voltage being proportional to both the r.f. input and the change in the control d.c.

Since the total path length via one diode is λ/4 longer than that via the other, the two contributions to the output will be in phase quadrature. If the control current for one contribution is continuously changed in one direction then that contribution will first reduce to zero amplitude and then increase again with the opposite polarity.

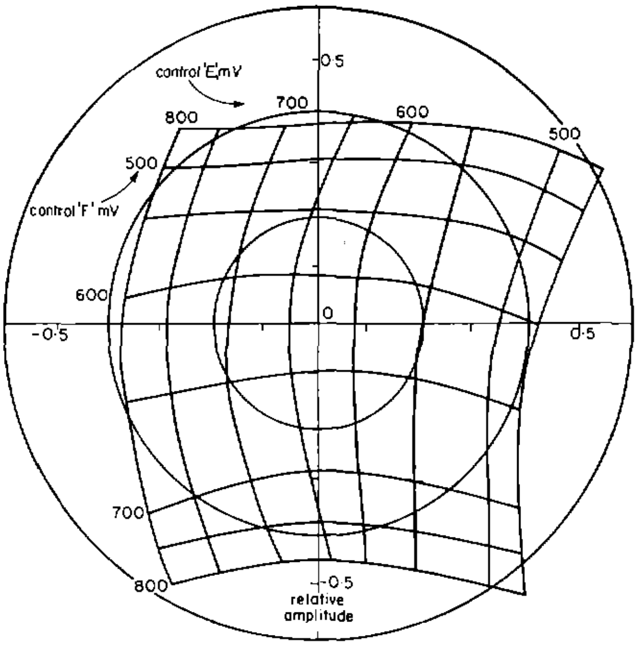

Fig. 5 Polar plot of quadrature attenuator outputs

A polar plot of the performance of a typical quadrature attenuator is shown in Fig. 5. The non-linearity is due to imperfections in the match of source and load and in the simple coupler used. The minimum loss is about 3·5 dB compared to that of 3 dB for an ideal system.

3.4 Aerial integrators

The d.c. controls for the r.f. attenuators are obtained from digital to analogue converters (d.a.c.s) following reversible 8-bit binary counters used as integrators. The outputs of these d.a.c.s are combined with the test waveform as dictated by the aerial control selector. Limit stops are provided on the individual counters and the application of test waveforms to the corresponding controls may be inhibited to eliminate the possibility of any counter trying to step outside its range.

In order to avoid all controls being set near minimum gain, giving little signal for the receiver to work on, a detector circuit for this condition is provided. This circuit drives all controls outwards from the null point until at least one exceeds half maximum output. At this point the normal adaptive process takes over.

3.5 The test-waveform amplitude

A compromise is necessary in determining the amplitude of the test waveform. A small pulse permits the equipment to examine the effect of small changes in the relative phases and amplitudes of the several contributions of the aerials.[8] This is particularly valuable in the final stages of adaptation so as to place a deep, narrow minimum of response on a precise bearing. As a result, particularly in the early stages of adaptation, the change in signal-to-interference ratio is so small as to be masked by noise in the error-signal channel. The equipment will then fail to adapt. With a large test waveform the equipment may be unable to perceive the optimum adjustment required to produce the best possible suppression of interference. A further limitation with a large test waveform is that, in general, it will cause a significant change in the gain of the aerial system to the wanted signal. This change will tend to increase with the amplitude of the test waveform and the number of controls to which it is applied. These changes will vary from field to field and the resulting amplitude modulation of the synchronising pulses can give an objectionable flicker in many receivers; they must therefore be severely limited.

At this point it is necessary to draw a distinction between the magnitude of the test waveform pulse and that of the control step that is applied if the result of the test is favourable. In the description of the equipment given in Section 2 it was implied that these are identical but it is not essential to the operation of the equipment that this must be so. A limitation on the maximum permissible size of the control step is needed because the system cannot guarantee to approach closer than half a control step on each control to the ideal condition. Furthermore, since the result of each field-period test is assessed statistically by the comparator in the presence of random noise in the error chain, some tests will give a positive result even when the effect on signal-to-noise ratio is slightly unfavourable. A combination of these effects could give a total error equivalent to several steps. An error of this size can in itself be objectionable when strong interferences are present and adaptation is nearly complete. Furthermore, the visibility of this interference is made worse by the statistical variations from field to field because a low frequency flicker is subjectively very annoying.

The system adopted in the experimental equipment to reconcile these conflicting requirements is as follows. Two alternative test pulse amplitudes are used, depending on the level of the error signal. When the error signal is large, i.e. in the early stages of adaptation, the larger size of test pulse is applied. When the error signal falls to a predetermined level the test pulse is automatically reduced to about one-third of its initial magnitude.

The magnitude of the control step adopted is 1/125 of the range of the quadrature attenuator control from zero to maximum. This was found to be about the maximum that could be tolerated and is slightly smaller than the lesser of the two alternative test pulse amplitudes. The effect of making the control change slightly smaller than is required to reach the test condition may be to give an effective aerial directivity pattern that is less favourable. Any error of this type will be small and rapidly corrected by further stages of adaptation.

The use of a test pulse amplitude less than that of the smaller value adopted would cause adaptation to cease in many circumstances with the original equipment. The larger amplitude test waveform causes considerable flicker on many receivers. Since the level of interference when it is used is normally rated as at least 'somewhat objectionable' and this condition persists for only a few seconds it is thought that it would be acceptable.

3.6 Control selection

As stated earlier, the test waveform is applied to a number of attenuator control ports selected pseudo-randomly with a further pseudo-random choice of the polarity of the applied step at each port. This gives the equipment greater freedom to explore the possible variations of its aerial directivity pattern than would be possible if the test waveform were merely applied to each separate port in turn. Some compromise is necessary in determining the maximum number of controls to be operated at any one time, as has been mentioned in Section 3.5.

Experience with the experimental equipment indicated that limiting the maximum number to five was a reasonable compromise. Taking all combinations of five from eight, with a choice of positive or negative polarity at each port, gives a total of 3488 combinations. Dwelling for 20 msec on each combination, the complete cycle occupies approximately seventy seconds. With this number of combinations it is not sufficient to use an ordered sequence such as that provided by a simple ternary counter since some of the eight controls would not receive a test waveform for up to twenty-three seconds. A much better system is to use a pseudo-random ternary sequence[9] for which each of the eight controls will be used at least once in every eight fields.

A generator to provide a pseudo-random ternary sequence for eight elements would be very complex and a satisfactory alternative was found in the form of a relatively simple seven-element sequence generator and a single-stage ternary counter.

4 Aerials

The design of the aerials for use with the adaptation system is not critical and may well differ from site to site to suit local conditions. Apart from trials with an elementary system of four Yagi aerials described later, the experimental work described in this article did not cover this aspect. Some general considerations of design are, however, worth stating.

The individual aerials can be of any degree of complexity from single dipoles to multi-element arrays. Where the wanted station is fixed as in rebroadcast links, it will generally be advantageous to use multi-element arrays oriented for maximum response of the wanted transmission as these will give additional protection against interference arriving from other directions. Aerials need not be widely spaced unless it is necessary to reject interference on bearings close to that of the wanted signal. Aerials can be spaced vertically as well as horizontally if it is required to discriminate against interference arriving from different angles of elevation.

It is not necessary to adjust the relative phases of the contributions from individual aerials on installation as this is taken care of automatically by the adaptive system. However, the feeder cable lengths should be adjusted for approximately equal delay-times of the wanted-signal paths via each aerial in order to avoid the possibility of a significant degree of frequency selectivity in the response when the aerial signals are combined.

If it is required to provide r.b.l. reception from several cosited u.h.f. transmitters on different frequency channels, only one array of aerials is necessary provided that its bandwidth is sufficient but a separate set of adaptive equipment, including the quadrature aerial attenuators, is required to deal with each transmission.

5 Performance of the experimental equipment

5.1 General considerations

In order to test the equipment four ten-element Yagi aerials in a broadside array, spaced 0·9m apart and oriented for maximum response in the direction of the Crystal Palace u.h.f. transmitter, were mounted on the roof of the laboratory. Five additional similar aerials were mounted, facing towards the receiving array, in an arc at various angles up to ±50° relative to the bearing of the wanted transmission. These aerials were used to radiate interfering signals and, for the same injected signal levels, gave similar amplitudes (within ±4dB) out of the individual receiving aerials. Where an input signal-to-interference ratio in the unadapted condition is quoted, it refers to the ratio at the output of one receiving aerial; this of course is unaffected by adaptation.

5.2 Interference beat frequency

The difficulty of adapting when the interference frequencies in the video signal are equal, or close, to zero or integral multiples of half-line frequency below about 300kHz was discussed in Section 3.1. This is illustrated in Fig. 6 which shows the adapted signal-to-interference ratio for a single c.w. interference, measured objectively at the video output of the receiver, as a function of the beat frequency. The complete curve of the cyclic variation is drawn only up to some 40kHz; from there up to 500kHz only the upper and lower limits of the curve are shown. The slight reduction in sensitivity between 2MHz and 3·5MHz was introduced deliberately to take account of the subjective reduction in susceptibility to interference in this region (see Fig. 3). The curve for interference from another television signal would be similar but the final adapted signal-to-interference ratio would be slightly poorer.

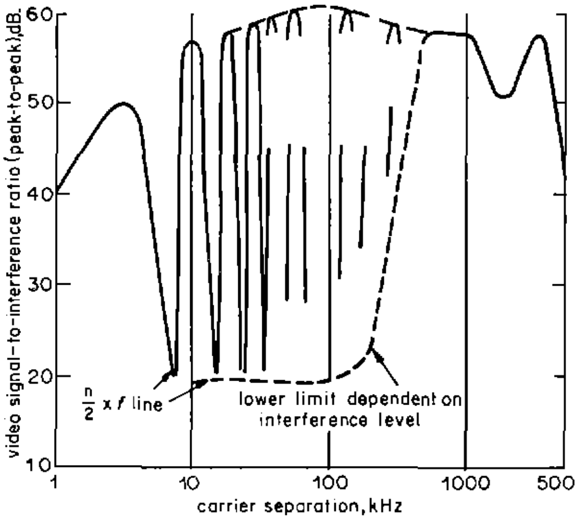

Fig. 6 Single c.w. interference. Typical adapted ratio.

5.3 Interference amplitude

If the peak amplitude of the interference is greater than −16dB relative to that of the wanted signal at the output of the receiver, the simple type of synchronising pulse separator used does not operate satisfactorily and the system will not adapt. It was found that, after initial adaptation, the input interference level could be raised until it was about equal to the wanted signal and good interference rejection was still maintained for considerable periods. If such a high level of interference was maintained, however, any large and sudden change in d.c. picture level would cause the adaptive receiver momentarily to lose synchronisation and revert to an unadapted state.

5.4 Output signal-to-interference ratio after adaptation

5.4.1 One interference

With one interfering signal the adapted signal-to-interference ratio is determined chiefly by the noise level of the error-signal channel and is not affected significantly by the input signal-to-interference ratio. In the case of c.w. interference this adapted ratio, in peak-to-peak terms, is approximately 60dB when the interference beat frequency is in the region where the equipment is most sensitive (see Fig. 6).

When the interfering signal is a television transmission, the adapted signal-to-interference ratio depends on what part of the interference modulation waveform coincides in time with the wanted-signal line synchronising pulse. If the two synchronising pulses coincide exactly, the interference is treated as c.w. of carrier frequency. If, as will generally be the case, part of the active line of the interfering signal coincides with the wanted synchronising pulse, then the picture content will affect the degree of adaptation, a dark picture giving better adaptation than a light one. With typical pictures the adapted peak-to-peal signal to peak-to-peak interference ratio is about 8dB worse than with c.w.

A special case of television-signal interference occurs when the carrier-beat frequency is close to zero or a multiple of half-line frequency below 300kHz, a condition which with c.w. interference produces no adaptation. In such a case a measure of adaptation can be obtained, the error signal being generated by video-frequency components in the interfering signal. The degree of adaptation is very variable depending on the picture content. If the picture contains little detail on a plain grey background, virtually no adaptation occurs, while fully saturated colour bars will give full adaptation.

Experiments with the laboratory model showed that if one interference is applied there is a period of five to ten seconds during which little visible adaptation occurs. This is followed by a few seconds of very rapid adaptation which reduces the interference to within some 5–10dB of its final level and a further period of some minutes during which the final adapted condition is achieved. This type of behaviour in adaptive systems has been reported elsewhere.[10]

5.4.2 Multiple interferences

If more than one interference is applied simultaneously, the process of adaptation is slowed down and the final signal-to-interference ratio achieved is lower. For example, after a period of about one minute the adapted signal-to-interference ratio is on average about 10dB worse with two interferences than with one and after a further period of up to ten minutes the difference is reduced to about 5dB. If the interfering signals are fading, as frequently occurs in practice, then the adaptation process can speed up appreciably.

5.5 Performance tests

A short series of subjective tests was carried out using various combinations of c.w. and television signals as sources of interference. The level of each individual interfering signal was −20dB relative to the wanted signal. The frequencies of the interfering carriers were between 400kHz and 1 MHz relative to the wanted carrier, the exact beat frequencies being adjusted to produce patterns on the screen with slopes at about 45°.

The results of subjective tests are summarised in Fig. 7 in which the tests are classified in groups in terms of a parameter m–n where m is the number of receiving aerials and n is the number of interferences. The diagram shows the mean and standard deviation of the subjective assessments in each group of tests.

It was apparent from both subjective and objective measurements that the ability of the system to cope with multiple interferences is dependent on the number of aerials in the receiving array. Assuming that the equipment has complete freedom to explore all possible variations of its aerial directivity pattern it should, in theory, adapt perfectly provided that (m–n) ⩾ 1. In practice, however, because the adjustment is quantised with a limited range of step sizes and also because the residual noise level in the error signal sets a lower limit to the size of beneficial test change that the equipment can recognise and respond to, the progressive reduction of m–n produces a progressive deterioration in the adapted signal-to-noise ratio.

6 Discussion of performance and requirements for an operational system

As the basic system had been shown to be effective in rejecting or reducing interference, it was decided that further development should be undertaken, but a number of improvements were necessary before it could become useful operational equipment for r.b.l. use.

One of the most important of these concerns the frequency response shown in Fig. 6. The failure to adapt to interference producing beat frequencies close to zero and multiples of half-line frequency would be unacceptable because co-channel interference from other television channels with nominally zero offset is very likely to occur in conditions of abnormal propagation and also because beat frequencies at multiples of line frequency produce the most visible screen patterns.

Another improvement which is required concerns the change of gain of the wanted signal which occurs during the test pulse period. This change would give brilliance variations on those receivers which either d.c. restore on the tips of the synchronising pulses or derive an a.g.c. control voltage from measurement of synchronising pulse amplitude. It would also interfere with another adaptive receiving system if two were run in tandem at different sites in a transmitter network.

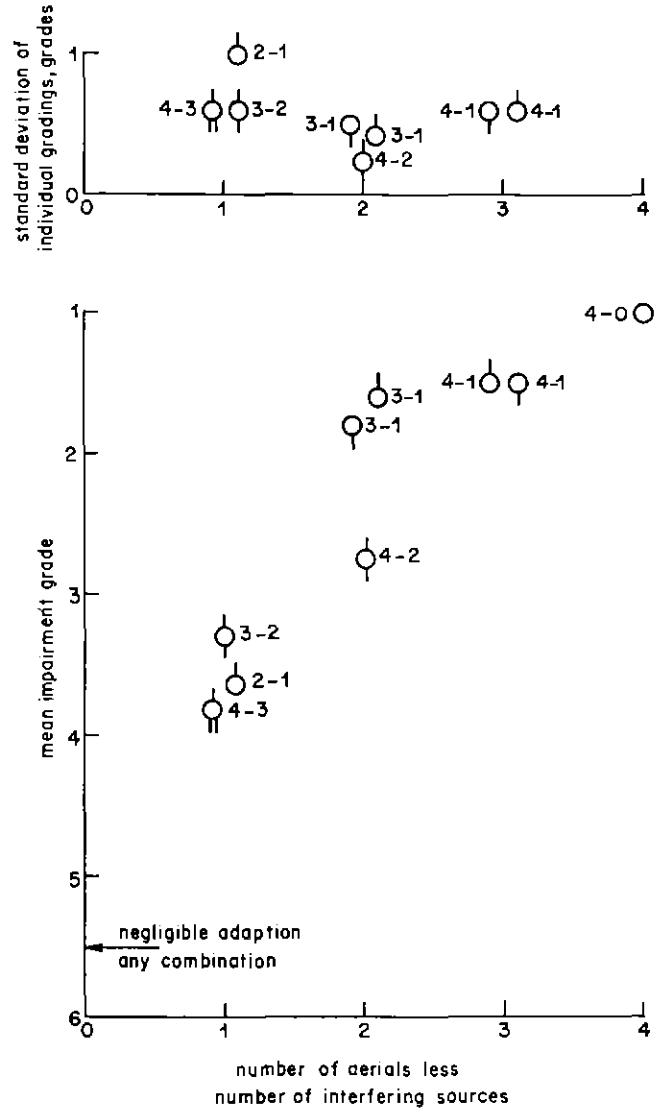

Fig. 7 Results of subjective tests
ȯ 1 c.w. interference ϙ 1 TV interference
ϕ 1 c.w. + TV interference
Subjective grading employed (CCIR Report 405–2, Note 9)
1. Imperceptible
2. Just perceptible
3. Definitely perceptible but not disturbing
4. Somewhat objectionable
5. Definitely objectionable
6. Unusable

For these reasons the change of gain during the test pulse should be reduced as far as is practicable.

As multiple interference is very likely to occur in practice the number of aerials should be increased so as to give improved performance under these conditions.

There are also many small points in the instrumentation of the equipment that should receive attention. These principally involve drift and noise. The requirements in these respects are considerably more severe than in normal television equipment, remembering that the equipment is attempting to observe small changes in interference levels down to 60dB below that of the desired signal.

7 Further developments of the adaptive system

7.1 General

This section describes improvements which have been adopted in a new adaptive receiver as a result of difficulties considered in the previous section. Whilst the general form of the proposed system is very similar to that of the original experimental version, a number of changes were incorporated in order to improve the performance in respect of the range of interference frequencies to which it will adapt, the final level of adaptation, the amplitude of test waveform impressed on the output signal, long-term drift and economy of components.

7.2 Design features

In order to eliminate the blind spots in the beat frequency range of the earlier equipment that occurred close to zero and multiples of half-line frequency, the method by which the error signal is derived, has been changed.

Beat frequencies in the range from a few hertz to 4kHz are measured by examining the envelope of the line synchronising pulses over a complete field period. The aerial system is switched between the reference and test conditions on alternate lines (as in the original equipment) but for dealing with this range of frequencies the odd and even line synchronising pulse envelopes are separately detected and then compared.

The range from 300kHZ to 5·5MHz is dealt with in the same manner as in the original equipment, but the delay line is no longer required.

The intermediate range, from 7kHz to 300kHz, is covered by measurements made during the black-level intervals between the equalising pulses in the field blanking period. The reference and test conditions each have a duration of one-seventh of a line and fifteen pairs of measurements are made in each field blanking interval.

In order to improve the adapted signal-to-interference ratio, particularly with several interfering signals present simultaneously, a number of modifications to the original system have been incorporated. The number of separate aerials in the receiving array that can be accommodated has been increased to eight; the magnitude of the test waveform pulse and control step made variable over a wider range, controlled automatically by the interference level, and a digital error signal comparator, less subject to asymmetry and drift, used instead of an analogue comparator.

To remove as far as possible the amplitude modulation of the wanted signal produced by the application of the test waveform, the combined r.f. signal from the quadrature attenuators is passed through another electronically-controlled attenuator with a range of ±1 dB. This forms part of a fast a.g.c. system, the control voltage being obtained from the low-frequency error signal channel. Amplitude stabilisation in this way also removes the need for the logarithmic amplifier.

An improved design of synchronising-pulse separator will permit the system to commence adaptation on lower signal-to-interference ratios.

As a result of simplification in design, the complexity of the equipment required for the revised system, even with provision for the use of up to eight aerials, will be less than that of the original experimental system with a consequent saving in component cost.

8 Performance of the improved system

During the initial laboratory alignment tests of the equipment on off-air signals, its operation was found to vary erratically. On occasion it would adapt to produce only a poor output signal-to-interference ratio or, having suppressed the interference almost completely, would suddenly revert to an unadapted condition.

This was at first thought to be due entirely to instrumental deficiencies in the equipment but subsequent investigation has shown that causes external to the apparatus may have been responsible for part, possibly the larger part, of the trouble experienced.

The first of these external causes is signals reflected from aircraft. In the area in which the BBC Research Department is situated, it has been found that aircraft reflections, at a level of about −40dB relative to the peak signal, are liable to occur as frequently as every few minutes during certain periods in the day. These are quite imperceptible on the picture in normal reception conditions but are interpreted by the adaptive system as co-channel interference, which indeed they are. They rise and decay too rapidly for the adaptive process to follow and merely produce error signals that confuse the adaptation to any steady interference that may be present.

The second external cause is picture-dependent modulation of the synchronising pulses in the transmitter and transmitter distribution network. This can take two forms; a large transient change of the synchronising pulse level following a shot-change in the picture or a more-or-less continuous low-frequency modulation. Identical effects can be produced by instrumental deficiencies in the adaptive system receiver, notably by the automatic gain control system or if the low-frequency response after the detector is not maintained down to a sufficiently low frequency.

In the adaptive system tests, the receiver was contributing some synchronising pulse modulation. However, later investigations have shown that the residual level of such modulation in the signal radiated by the BBC Crystal Palace u.h.f. transmitters can be as high as −45dB to −50dB. This would severely limit the maximum signal-to-interference ratio achievable by the adaptive system and it seems reasonable to assume that the synchronising pulse modulation by picture would reach a significantly higher level at transmitters more remote from the network origin point, since more links in the distribution chain, including rebroadcast links, would be involved.

Neither of these effects has been found to cause trouble with the experimental adaptive system described earlier. This was presumably because that equipment was relatively insensitive to interference producing video beat frequencies below about 2kHz. A high sensitivity to interference at offsets down to a few Hz is, of course, essential in an operational equipment in order to deal with co-channel transmissions with nominal zero offset.

It appears probable that a better compromise between the speed of operation, the low-frequency interference rejection capability and the degree of adaptation obtainable might be achieved. A computer control of the system could permit this compromise to be changed as the level of low-frequency interference varied.

9 Uses of an adaptive receiving system

When a u.h.f. television transmitter site has been selected for optimum service area coverage and investigation has shown that co-channel interference to the rebroadcast link will be troublesome with a standard r.b.l. aerial, there are at present three ways in which the trouble can be minimised:

(*a*) by using an intermediate r.b.l. pick-up point plus an s.h.f. link;
(*b*) by using a more complex conventional r.b.l. receiving aerial;
(*c*) by choosing an alternative transmitter site.

The adaptive system would offer a fourth method of overcoming interference problems.

It is worth noting at this point that a diversity system may be regarded as a very elementary form of adaptive reception and that the more advanced form considered in this report would be expected to give much better results for a given complexity of aerial system.

With regard to (*a*), above, s.h.f. links are expensive and although no firm costing for an adaptive system is yet available it is expected (on the basis of relaying two television programmes) that the cost would be less than half of that of an s.h.f. link; in addition the system would not require the site needed for the link transmitter. Thus an adaptive receiver would always be preferred on economic grounds, provided it could give adequate reliability and performance. It could also be considered for use at smaller transmitters for which the cost of an s.h.f. link would not be justified. Furthermore, some main stations are situated in locations where no intermediate link is practicable, as in the Channel Islands.

With regard to (*b*), the discrimination against interfering signals that can be obtained from a conventional fixed aerial system is limited in practice both in respect of the minimum angular separation between the wanted and interfering signals and of the maximum discrimination obtainable irrespective of bearing. To produce a minimum in the directivity pattern within a few degrees of the bearing of the wanted signal demands a degree of stability in the aerial and feeder geometry that is difficult, if not impossible, to maintain over long periods. The maximum discrimination against a signal arriving from any direction that can be obtained with a conventional aerial system is limited to about 30dB by scatter from local reflecting objects. The magnitudes and phases of these locally reflected signal components will vary with temperature, weather and seasonal conditions and hence cannot be compensated in a fixed system, even on an adjust-on-test basis. Neither of these limitations apply to an adaptive system, provided that the conditions that have to be compensated do not change at a rate too fast for the adaptation process to follow.

With regard to (*c*), any change of the transmitter site that entails a significant loss of coverage will usually require an increase in the total number of transmitters required to serve the area. This involves an increase in cost and may lead to planning difficulties because of the limited number of available u.h.f. channels.

There are a number of stations at present in the planning stage where the adaptive system could be of benefit. They can be separated into categories as follows:

1. Main stations in very difficult situations where no intermediate link is possible.
2. Stations where the chief sources of interference are on bearings close to that of the wanted transmitter or produce signals of high level.
3. Stations for which a transmitter site giving poorer coverage than some other possible site has been proposed because of r.b.l. difficulties.

In the first category, the case of the Channel Islands is of major importance. The reception point would probably be on Alderney using as the parent station either Stockland Hill, Rowridge or Beacon Hill. Since reception conditions are very similar from all three of these stations, the reception of Rowridge will be discussed, more information being available at present for this case.

The levels of protected field strength* quoted include the protection against interference that is provided by the directivity of the standard r.b.l. aerial.

Table I gives information on the measured field strength from Rowridge at Alderney, a distance of 123·1 km.

TABLE I

Field strength dB (μV/m) exceeded for % time					
99·9%	99%	50%	10%	5%	1%
43	53	66	82	86	91

Table II, drawn up in 1971, shows details of the predicted sources of interference at that time. The figures have been calculated using the standard computer programme[12] and assuming a standard r.b.l. aerial ($\pm 10^\circ$ to -3dB points, -30dB at rear).

It will be seen from these two tables that both Brest and Surtain give a sufficiently strong field for 5 per cent of the time to cause interference to the wanted signal when at its median level of 66dB (μV/m). A further three transmitters give fields in excess of the required protection ratio for more than 1 per cent of the time. When the fading of the wanted signal from Rowridge is taken into account the number of probable sources of interference rises to about ten. Under exceptional propagation conditions, or when Rowridge radiates with reduced power, further stations could occasionally give interference. Allowing for a reasonable diversity factor, an eight-aerial adaptive receiving system should be able to reduce these interferences to insignificance.

Up to the present time there have been a number of sites where the conditions could be considered to lie in the second or third categories and one of the principal problems of

---

* The protected field strength represents the neccesary strength of a received signal to ensure that it exceeds all interfering signals by a sufficient margin to protect picture quality.

TABLE II

Transmitter	*Channels*	*Polarisation*	*Relative Bearing*	*Wanted signal field strength, dB(μV/m), protected for:*		
				50% time	*95% time*	*99% time*
Gt Britain						
Sandy Heath	21, 24, 27, 31	H	2°	12·5	62·2	75·6
Blaenplwyf	21, 24, 27, 31	H	−53°	<0	40·9	56·1
Chagford	21, 24, 27, 31	V	−75°	<0	62·4	64·6
Helston	21, 24, 27, 31	V	−107°	<0	49·4	60·3
Aberdare	21, 24, 27, 31	V	−49°	<0	36·1	46·9
Scilly	21, 24, 27, 31	V	−113°	<0	25·9	49·8
France						
Brest	21, 24, 27	H	168°	22·2	72·1	78·4
Lille	21, 24, 27	H	46°	<0	51·6	73·1
Surtain	21, 24, 27	H	103°	17·1	72·1	72·3
Denmark						
Sundeved	24	H	20°	<0	34·3	53·5
Norway						
Mandel	24	H	−2°	<0	40	56·4
Flaam	21, 24	H	−6°	<0	31·4	48·3
Brunlanes	21	H	−3°	<0	37·6	54·3
Sauda	27	H	−5°	<0	18·9	35·7
Holland						
Lopik	27	H	31°	<0	49·1	69·5
Roermond	31	H	42°	<0	34·5	46·7

planning is to adjust the plan so as to avoid these conditions, even at the expense of limiting the service in certain areas or having to provide extra links or transmitters.

In addition to the above three categories of stations in the planning stage there is a fourth category in which the adaptive system could be of value. This comprises stations, already operational or fully planned, at which r.b.l. reception is initially satisfactory but later is impaired by interference that was not originally anticipated. This interference could either be a new source or a change in old source such as a change of power or offset.

If the received signal suffers from excessive fading but is otherwise of adequate field strength, then by spacing the adaptive system aerials vertically the resulting adjustable vertical directivity should minimise any degradation of the signal-to-noise ratio caused by fading.

9.1 Other applications

One other possible application for the adaptive receiving system is for monitoring purposes when it is desired to be able to receive one or more slave stations at a main station although a picture to r.b.l. standards is not necessary. Under these conditions the received signal is liable to be weak and subject to considerable interference. The adaptive system could considerably improve the picture received in such a situation, particularly if locally generated synchronising pulses suitably delayed were used for locking purposes. Brief tests on the experimental equipment, using this technique of injecting clean synchronising pulses from a local source, indicate that adaptation will start with signal-to-interference ratios of the order of −10dB. With minor modifications to improve the performance of this particular application it is probable that even poorer signal-to-interference ratios could be accommodated.

10 Conclusions

The equipments described have demonstrated the principles required for an adaptive system for u.h.f. television broadcast links. A system for use when the only interferences are not near-multiples (including zero) of half-line frequency has been successfully demonstrated. Work has shown that there are severe limitations when it is necessary to adapt in the presence of low-frequency interferences. When nominal zero offset transmissions are present it is probable that for a successful system special precautions would have to be taken at the wanted signal transmitter to remove the small residual amount of low-frequency modulation of the synchronising pulses.

These problems with the system have resulted in work on the receiver being suspended indefinitely whilst investigations are made into other means of satisfying the principal requirement i.e. a link to the Channel Islands.

11 References

1. Widrow, B. *et al.* 1967. Adaptive antenna systems. *Proc. IEE,* 1967, **55**, 12, pp. 2143–59.
2. Susans, D. E. A feasibility study of an adaptive receiving system for uhf television. BBC Research Department Report No. 1971/32.
3. Susans, D. E. An adaptive receiving system for uhf television. BBC Research Department Report No. 1974/23.
4. Powell, M. J. D. 1970. Numerical methods of optimisation. IEE Conference Publication 66. Optimisation techniques in circuit and control applications 1970, pp. 1–5.
5. CCIR Report 306, Documents of the XIth Plenary Assembly. Oslo 1966 V, p. 212.
6. Hancock, J. C. *and* Wintz, P. A. 1966. Signal detection theory. New York, McGraw-Hill, 1966.
7. Roberts, D. A. E. *and* Robinson, S. J. 1968. A PIN diode modulator for the frequency band 2·5–7·5 Gc/s.
8. Davis, R. H. *and* Roberts, P. D. 1967. Method of conjugate gradients applied to self-adaptive digital control systems. *Proc. IEE,* 1968. **115**, 4, pp. 562–71.
9. Golomb, S. W. 1967. Shift register sequences. San Francisco, Holden Day, 1967.
10. Wall, P. K. 1970. Practical applications of optimisation techniques. IEE Conference Publication, 56, Optimisation techniques in circuit and control applications 1970.
11. Susans, D. E. British patent application No. 30965/71. Measurement of interference on an electrical signal.
12. The prediction of co-channel interference to television broadcasting services in the frequency range 470 to 960 MHz. BBC Research Department Report No. 1969/33.

A Medium-power V.H.F. F.M. Solid-state Transmitter for Local Radio

A. H. B. Bower, M.A.(Cantab), C.Eng., M.I.E.E.
Designs Department

1 Introduction

The expansion of the BBC's Local Radio service a few years ago necessitated the installation of a number of v.h.f. f.m. transmitters, including several with output powers of a few hundred watts. Previously, powers of this magnitude would have demanded thermionic-valve amplifiers, but semiconductor development appeared to have reached the point where the design of a solid-state transmitter could be considered. Such a transmitter would have several advantages in reliability and safety, among them being the following.

> Overall reliability would be increased because transistors, if used correctly, have longer lives than valves as they do not suffer from cathode-poisoning. At one time, a problem in power transistors for operation at radio frequencies was metal migration, but this seemed to have been solved.
>
> Forced-air cooling would be unnecessary, so avoiding the problem of blower reliability.
>
> A solid-state transmitter could contain a number of amplifiers operating in parallel and arranged so that the transmitter would continue to operate even if some of the amplifiers failed.
>
> There would be no need for a high-voltage d.c. supply with its attendant danger of flash-overs and insulation breakdown. Safety would also be improved; apart from the mains input the only high voltages present would be at radio frequencies and these tend to be less dangerous than d.c. causing burns rather than electric shock.

The main disadvantages of a solid-state transmitter would be increased complexity and capital cost, but these were thought to be outweighed (at power levels up to a few hundred watts, at least) by the improved reliability possible. Accordingly, development was begun, the objective being a power output of 400 watts.

2 Amplifier design

It was apparent immediately that no single transistor delivering 400W in Band II was likely to become available soon and that some way to combine the outputs of several lower-power transistors would have to be found. Several suitable transistor-types were available, mostly intended for use in equipment for the 150–174 MHz mobile-radio band.

The transistors could be connected in three ways:

(*a*) All connected in parallel or, possibly, push-pull parallel.
(*b*) Each in a separate amplifier, with the amplifier-outputs combined.
(*c*) A mixture of (*a*) and (*b*).

Method (*b*) was adopted as it was felt that the parallel configuration needed for (*a*) could result in problems of power-sharing and heat dissipation. Also, failure of one transistor might lead to the destruction of several others.

It was necessary to determine how much power could be obtained reliably from one amplifier. Experiments showed that one device could deliver about 30W without operating too close to the limit of its power ratings. This was subsequently increased to 60W following the appearance of a higher-power device. Accordingly, it was decided to develop as a basic unit, an amplifier with a nominal power output of 50W (in practice, 60W was achieved).

This basic amplifier had to be:

Stable
Efficient
Reliable
Easy to adjust
Undamaged by removal of the output load or mistuning

No serious difficulty was encountered with instability or parametric oscillations in normal operation. Efficiencies of about 65 per cent and power-gains of the order of 9dB were obtained, and so an output of 60W required an r.f. input of 8W and a supply input of 90W (3·75A at 24V).

To avoid exceeding the dissipation rating of the transistor, the input supply current was limited to a maximum of 4A. The total power input was then limited to 104W, 96W from the supply and 8W drive. Under the worst-case conditions, with the output load removed, most of this power would be dissipated in the transistor. As the rated dissipation of the transistor used was 80W at 50°C mounting-stud temperature, destruction of the transistor would be rapid unless the power input could be reduced quickly under fault conditions. To this end, a directional coupler is used on the output of the amplifier to detect the reflected wave that is present when the load is removed and to reduce the stabilised power supply voltage to a safe value.

Despite these precautions, it was found that transistor-failures occurred occasionally during routine testing. Under certain tuning conditions, the collector current rose and the r.f. power-output fell, causing rapid heating of the transistor; Fig. 1 shows how these factors vary with tuning. This effect was mitigated by restricting the range of the tuning controls and arranging the power supply to be at 14 V initially, rising automatically to 24 V when the power-output reached about 20 W, the amplifier then being sufficiently close to the correct tuning point to avoid damage. The 14V/24V switch is controlled by a forward-wave detector incorporated in the output directional coupler.

A complete amplifier is shown in Fig. 2 and the circuit is shown in Fig. 3. The r.f. amplifier is contained in a screened box, at the top of which can be seen the output directional coupler. A second coupler is fitted at the input to the amplifier, to assist in tuning. The supply regulator comprises the four transistors (type 2N3055), together with additional circuitry mounted on the rear of the heat-sink, and provides:

(*a*) 14 V output, changing to 24 V as required,
(*b*) current limiting at 4 A,
(*c*) rapid shut-down if the output load is removed.

If the r.f. amplifier should fail and go short-circuit, the series-pass transistors dissipate 124 W (4 A at 31 V) and become very hot. The resulting de-rating factor requires that three of the 2N3055's be used in parallel, the fourth being used as a driver.

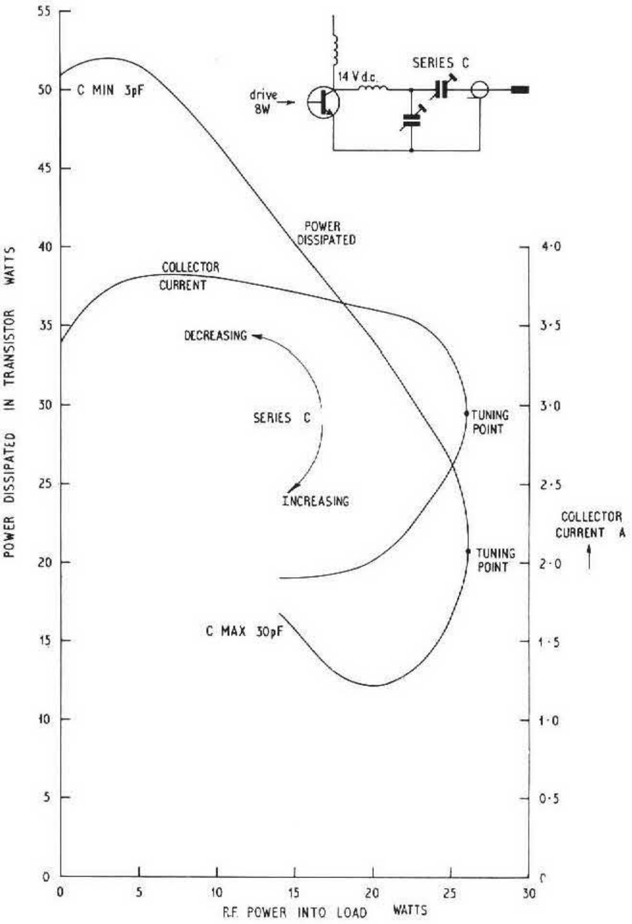

Fig. 1 Variation of power output and power dissipated in transmitter with variation of series capacitance

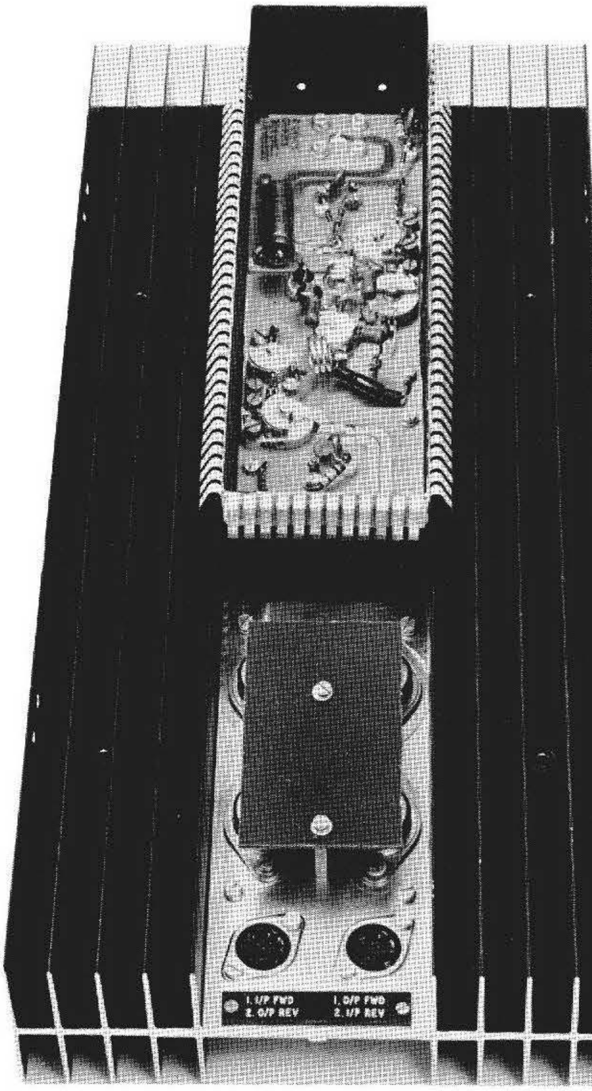

Fig. 2 One complete amplifier

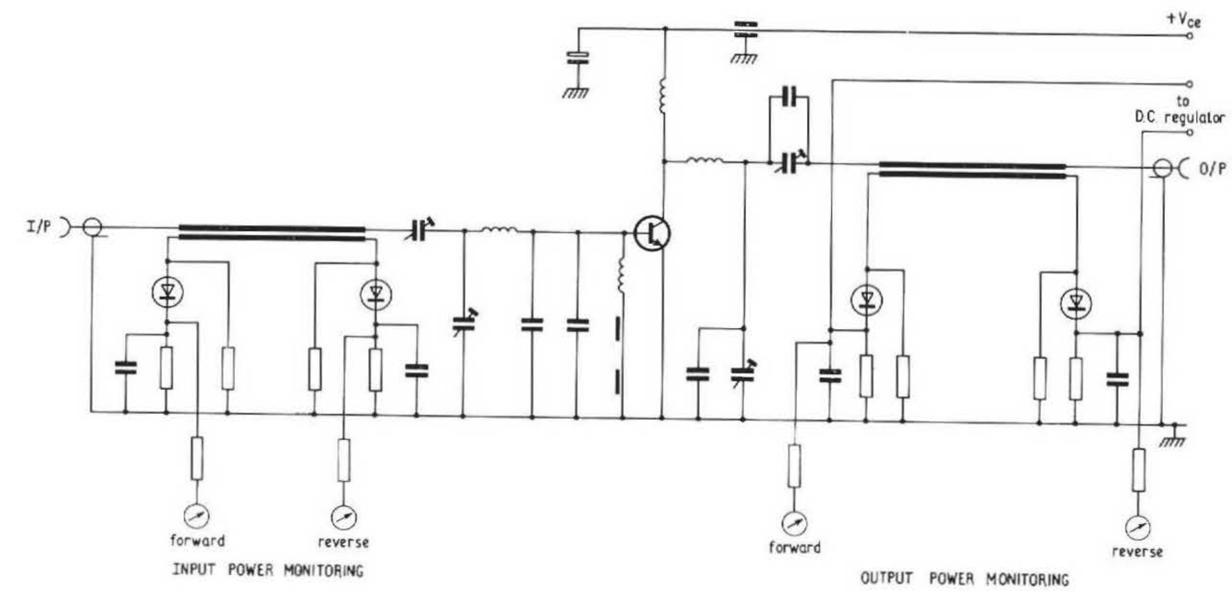

Fig. 3 Circuit of complete amplifier

3 Combining networks

When the power capability of the basic amplifier had been established, attention was turned to ways in which the outputs of several such amplifiers could be combined. Two methods were finally adopted, the 3 dB coupler and the Wilkinson Hybrid.[1]

3.1 3 dB coupler

One form of 3 dB coupler comprises four quarter-wave transmission lines, the circuit of which is shown in Fig. 4. A practical realisation of such a coupler using lumped constant equivalents of the lines is shown in Fig. 5. Power fed into input A divides equally between loads C and D, with no power in B. If, say, load C is mismatched, some power is dissipated in B and some returned to A – if the source A is matched, the power in load D is unaffected. The outputs from C and D are in quadrature.

The 3 dB coupler may be used also as a combiner. If two equal voltages with the correct 90° phase difference are applied at C and D, their combined output appears at A and none at B. If the phase of one input voltage is reversed, all the output power will appear at B and none at A.

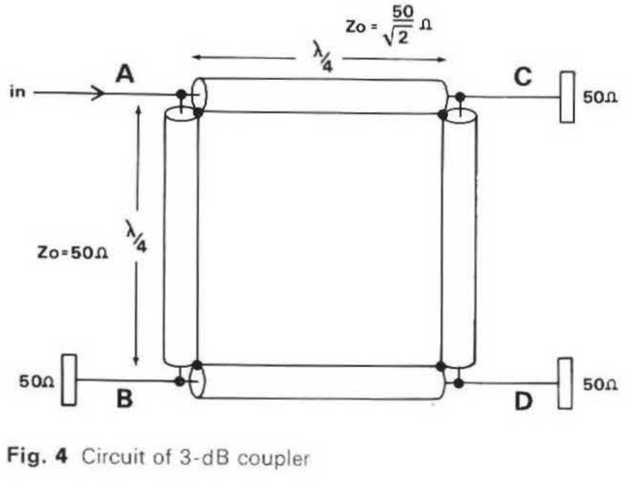

Fig. 4 Circuit of 3-dB coupler

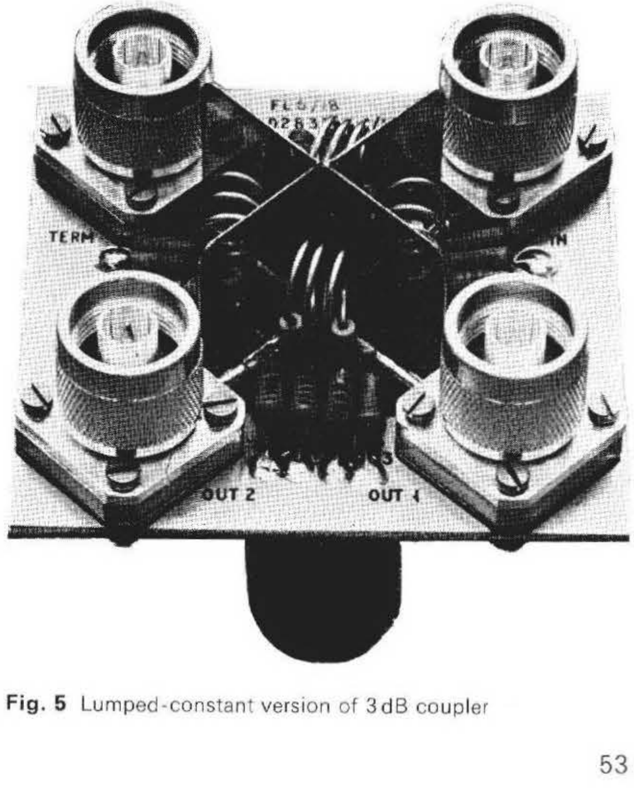

Fig. 5 Lumped-constant version of 3 dB coupler

3.2 Wilkinson Hybrid

The circuit of a Wilkinson Hybrid is shown in Fig. 6, in this example a four-way 50Ω splitter. Power from a source of 50Ω is to be divided equally among the four 50Ω loads. To the source are connected four quarter-wave lines, each with an impedance of $50\sqrt{4}\,\Omega$. To each load is joined a 50Ω resistor, the other ends of the resistors being connected to a common point. This circuit has the property that, if one output is misterminated, the feed to the remaining outputs is unaffected. Some of the power reflected from the mistermination is returned to the source and some is dissipated in the resistors. From considerations of symmetry, it can be seen that when all the outputs are similarly terminated the power in each load is the same in amplitude and phase as that in all the other loads.

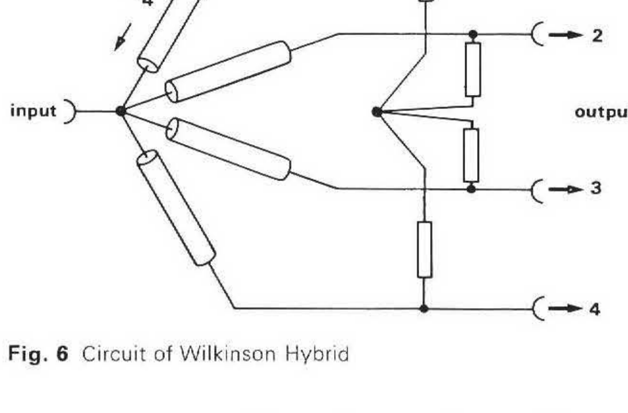

Fig. 6 Circuit of Wilkinson Hybrid

The Wilkinson Hybrid can also be used to combine any number, N, of sources of power; if these are equal in amplitude and phase, no power is lost in the resistors. Removal of one source does not affect the impedance seen by the other sources, though power is reduced by a fraction greater than 1/N, some being dissipated in the resistors.

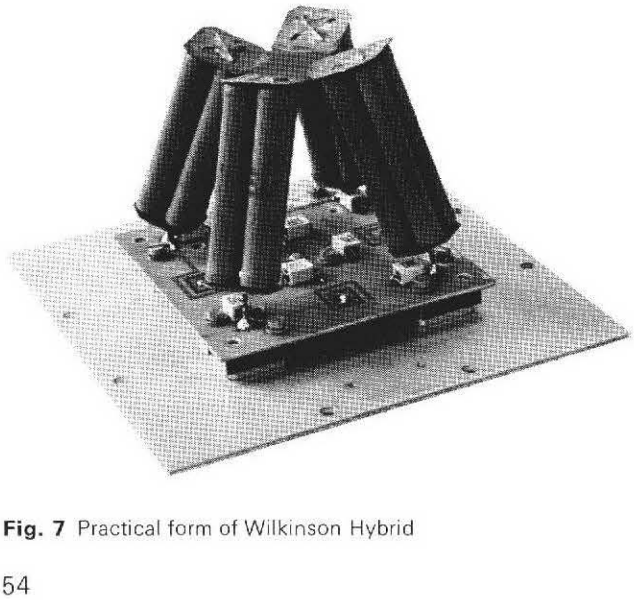

Fig. 7 Practical form of Wilkinson Hybrid

The Wilkinson Hybrid circuit can, therefore, form the basis of a system for combining the outputs of power amplifiers. Should one amplifier fail, the remainder are unaffected, though some power is lost in the resistors. Fig. 7 shows a practical 50Ω combiner, with its screening removed, in which the quarter-wave lines are realised in lumped-constant form. Each 50Ω resistor consists of four 200Ω resistors in parallel as it has to dissipate considerable power under fault conditions. The four-way splitter is similar but has components of lower power-rating.

The main limitation on power handling of the Wilkinson Hybrid circuit is the dissipation of the resistors. As both ends must be isolated from earth, it is not possible to use standard 50Ω coaxial loads and it is necessary to parallel several resistors as described above. The 3 dB coupler does not suffer from this drawback and is preferred in high-power arrangements.

4 The complete transmitter

A block diagram of the complete transmitter is shown in Fig. 8, and Fig. 9 shows the assembled transmitter which is in use at BBC Radio Brighton. A total of eight 50 W amplifiers is used. To ensure reliability these are arranged in two groups of four, each group having a separate driver and power supply. One group may be withdrawn for maintenance while the other carries the service.

In the drive unit, frequency modulation is performed at 3 MHz using the variable-inductance frequency-modulation circuit;[2] full deviation with low distortion is obtained. Frequency-multiplication, with its inherent degradation of centre-frequency stability is avoided, and the 3 MHz signal is converted to Band II in two steps, first to 10·7 MHz and then to the final frequency, at which the drive signal is amplified to about 7 W.

Normally, two drive units, designated A and B, are fitted and selection is made by a switch with the following five settings:

1. Off
2. A selected
3. B selected
4. A preferred
5. B preferred.

In settings 4 and 5, failure of the preferred drive unit causes a control unit to select the output of the other drive unit and to latch in that condition, so avoiding 'hunting' in the case of an intermittent fault.

The output from the selected drive unit is applied to a 3 dB coupler used as a two-way splitter from which two 3·5 W outputs are fed to two separate amplifiers. These are similar to the basic amplifier but operate at a lower power-level, variable over the range 20–36 W, and each feeds a four-way Wilkinson Hybrid splitter, described above. Each four-way splitter feeds a group of four 50 W amplifiers, the outputs of which are combined in another Wilkinson circuit to give a total of 200 W. Finally, the two 200 W signals are combined in a 3 dB coupler to give 400 W. As mentioned above, the basic amplifier power output is more than 50 W in order to allow for losses of a few watts in the combiners. The combined output is fed

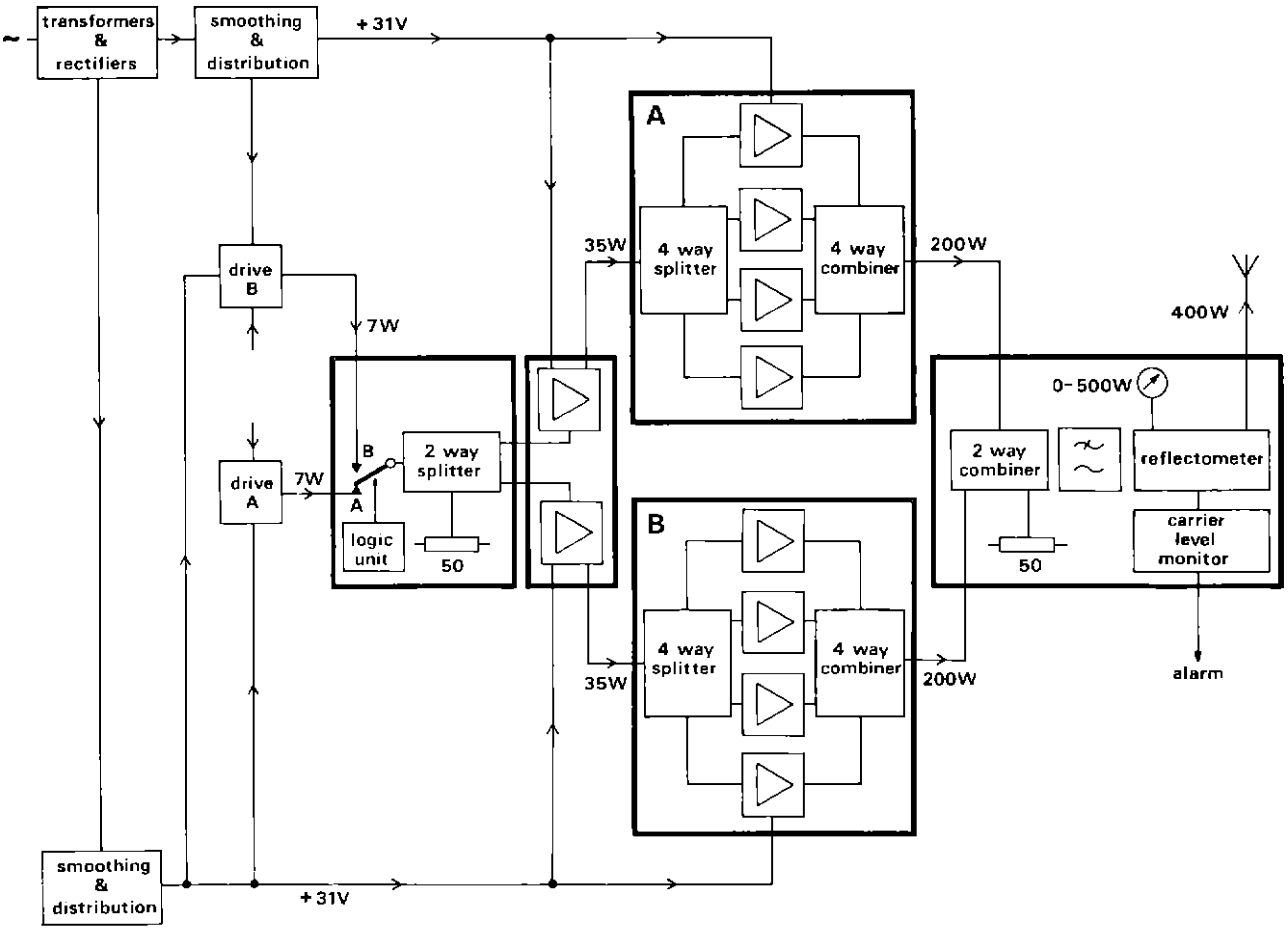

Fig. 8 Block diagram of complete transmitter

through a low-pass filter and directional wattmeter to the aerial. A level detector is provided, which indicates three conditions:

normal power level;
power level reduced by more than 2dB but less than 12dB;
power level reduced by 12dB or more.

The transmitter operates from a 190–260V 50Hz mains supply, from which three d.c. supplies are obtained, namely:

+12V stabilised for low-level drive amplifiers
+31V, 32A, partially-stabilised, for power amplifiers
−50V for relays.

The 31V supply is duplicated in two completely separate units, each feeding half the power amplifiers and consisting of a constant-voltage transformer, silicon-rectifier bridge and a bank of capacitors totalling 0·12F in value. The control unit requires a supply at +5V, and this is derived from both 31V supplies through a pair of isolating diodes and a suitable stabiliser. Normal practice is to leave the drive running continuously and to switch-on the 31V supplies at the beginning of broadcasting each day. A mains contactor is provided for this purpose, controlled by a programme detector unit.

5 Operation

Several transmitters of this type have been operating for several years and have proved to be reliable. At first, some difficulties were encountered with printed-circuit inductors used in the combiners. Some of these inductors overheated and failed after several months; replacing them by wire coils cured the difficulty.

6 Future possibilities

Since this development was carried out, higher-power transistors have become available. It should now be possible to design a single amplifier delivering 100–150W, making a 1kW solid-state transmitter based on this design practicable with the same number of amplifiers.

7 References

1. Wilkinson, Ernest J. An N-way Hybrid Power Divider. IRE Transactions on Microwave Theory and Techniques. January 1960.
2. The Variable Inductance Frequency Modulator. BBC Engineering Division Monograph No. 76. December 1968.

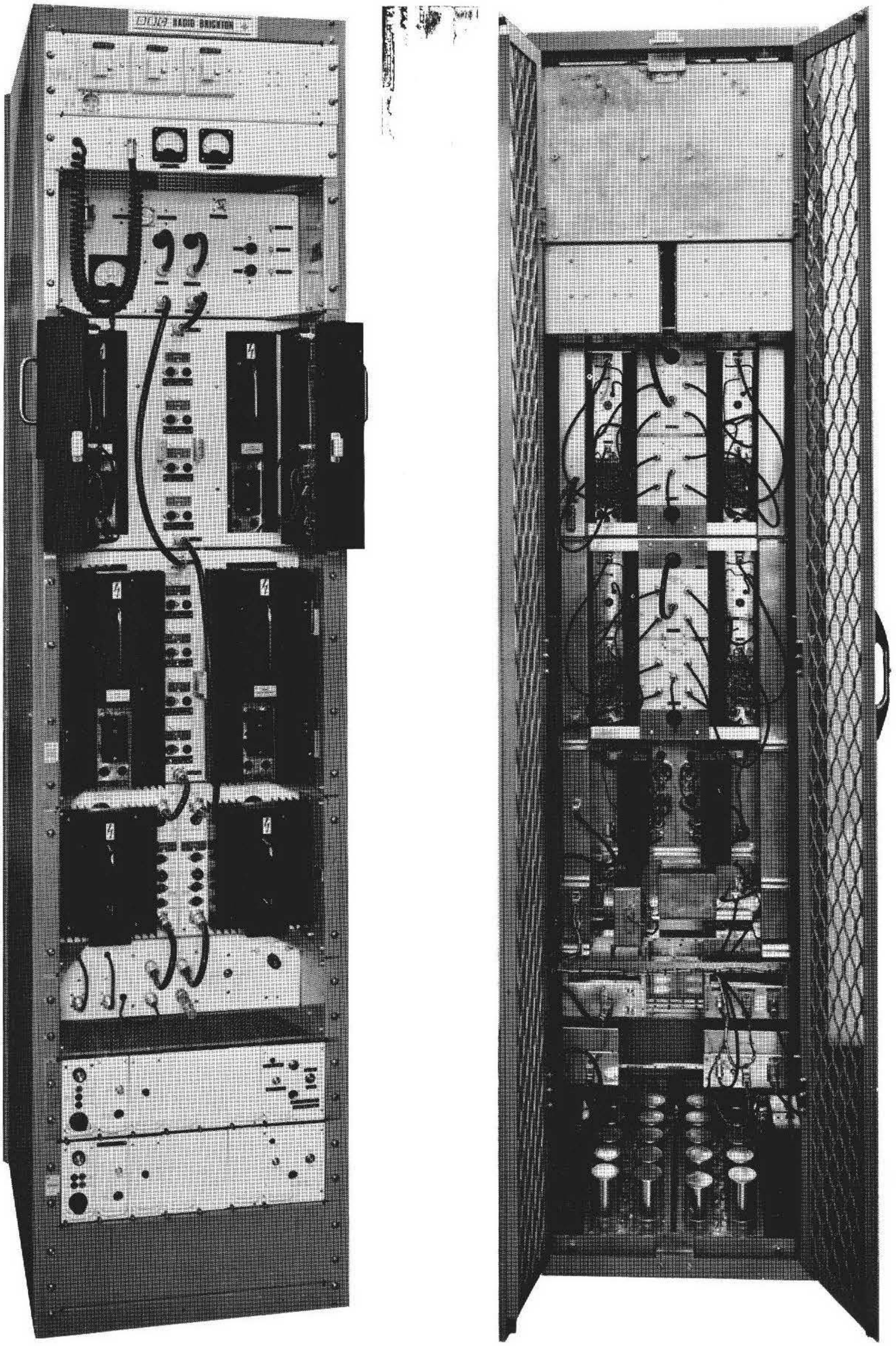

Fig. 9 The complete transmitter constructed for BBC Radio Brighton

Monitoring System for High-speed Duplication of Sound Tapes

P. M. Johnson
External Broadcasting Engineering

L. Richardson, C.Eng., M.I.E.E., M.I.E.R.E.
Head of External Services Studios (Engineering)

Summary: The BBC External Broadcasting Department supplies some 1,200 tape recorded programmes each week to relay bases and other users. These recordings are made on high-speed duplicating tape machines and the article describes the monitoring system which has been developed for the checking of the quality of the copy tapes.

1 Introduction

For many years sound programmes recorded on magnetic tape have been copied by the use of standard recording/replay machines, with one master reproducer driving one or more 'slave' recorders operating at the normal replay speed of the programme material. Quality monitoring under this arrangement presents few problems, but it does require the full attention of an operator to check the outputs of the slave machines throughout the copying session. If a single copy is being produced, this monitoring may be continuous, but for multiple copies random or sequential monitoring is usually employed. Where several copies of a master tape are required or when a single copy is made of a long-duration master tape this method is inefficient and wasteful of manpower. Additionally, where the normal play-back method is employed, a reverse-wound spool is produced and it is necessary to rewind the tape before despatch, lengthening the time of the process and so again reducing the efficiency of the operation.

In recent years the efficiency of the operation has been improved by employing master and slave machines which run at several times the normal record/replay speed. There are disadvantages, however, chief among which is the extreme difficulty of monitoring the output of the slave machines satisfactorily. Not only are the signal frequencies actually being copied largely outside the audio frequency range, so that aural monitoring is impossible, but visual monitoring, because of the shortened time interval, becomes virtually meaningless, except for indicating long periods of low level or complete loss of programme. Checking the copies is, therefore, usually confined to random sampling of each production batch. Moreover, the need for re-spooling of each copy arises when preparing multiple copies; this is time-consuming and tends to cancel the advantage gained by high-speed copying methods. Unless the rewinding is done at a comparatively slow speed, which is even more wasteful of time and effort, the result may be a poorly wound tape as a final product. If, however, the copying is carried out in reverse, respooling is unnecessary, and since the copying speed is constant and less than the normal rewind speed, the wind of the finished tape is virtually without fault. The only re-spooling necessary is then that of the master tape before the copying session.

The problems of monitoring, efficiency of operation, and the need to provide an almost perfectly wound tape as a final product are of great importance to the External Services of the BBC, whose taped programme output to Relay Bases and other users approaches 1200 copies per week. These recordings are of between 15 minutes and 1 hour programme duration, and most of the tapes are produced on high-speed duplicators which are subject to the limitations outlined. The tape copies must conform to normal broadcasting standards and even the small percentage of failures which inevitably escape detection by the batch sampling method of checking is unacceptable. It was highly desirable, therefore, that a method be found for continuously monitoring each of the copies produced by the High Speed Duplicators (HSDs) in use at Bush House, the headquarters of the External Services.

2 General principles

The system adopted for automatically monitoring the outputs of the HSD machines, is based on two major considerations:

1. the nature of the faults found by experience to be the most common when multicopying and,
2. the need to make maximum use of the existing facilities provided by the High Speed Duplicators and their ancillary switching systems.

Provided that correct alignment of the HSD machines had been carried out before beginning the copying session, faulty copies were found to be the result of one or more of the following:

(*a*) incorrectly-laced tape;
(*b*) presence of dirt in the head assembly;
(*c*) changes in magnetic tape characteristics due to emulsion defects;
(*d*) machine faults occurring during the copying process;
(*e*) incorrect equalisation being selected;
(*f*) unwiped tape being used (there is no erase facility on the HSD).

With the exception of (*f*) all the defects outlined result in the output signal level from the slave machine being low compared with that of its master. It was decided therefore to compare the two analogue signals and to provide a fault indication when the difference exceeds pre-determined limits. In addition, a system for quickly and easily checking the electrical and mechanical line-up of the recording machines before the actual copying would also be provided.

In comparing the output from any tape machine with its input, difficulties result from the inevitable time delay caused by the linear displacement between the replay head and the record head. In the method adopted, this problem is overcome by employing a separate monitor head on the master machine, positioned so that its output coincides in time with the slave monitor head, and comparing the outputs of these two heads. This provides a sensitive fault detection and is much simpler than attempting to use an electronic or mechanical delay system. The layouts of the head assemblies, before the fault detection system was installed, are shown in Fig. 1a and the modified head layouts in Fig. 1b.

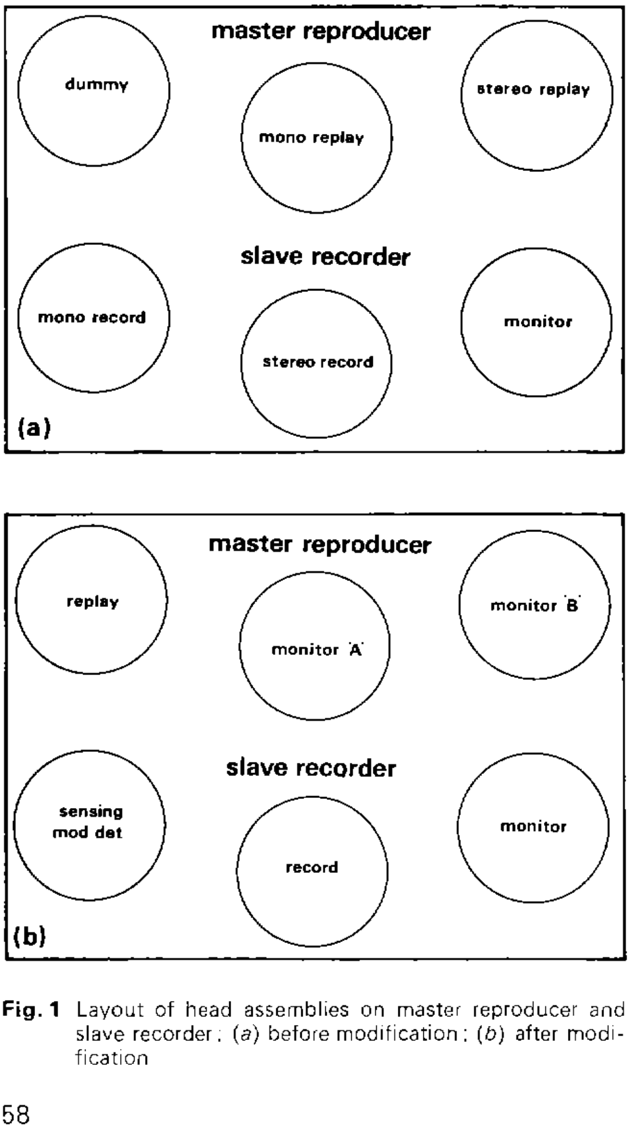

Fig. 1 Layout of head assemblies on master reproducer and slave recorder; (*a*) before modification; (*b*) after modification

The need for two additional monitor heads on the master machine arises from the different time delays which occur when different speed ratios are employed between master and slave machines. The various combinations used on the High Speed Duplicators are as follows:

	i	*ii*	*iii*	*iv*	*v*
Master Tape Speed (in./sec.)	15	15	7·5	7·5	3·75
Copy Tape Speed (in./sec.)	15	7·5	7·5	3·75	3·75
Master/Slave Speeds (in./sec.)	60/60	60/30	60/60	60/30	30/30
Speed-up Ratio	4:1	4:1	8:1	8:1	8:1

Monitor head 'A' is used for combinations (*i*), (*iii*) and (*v*), whilst monitor head 'B' is used for combinations (*ii*) and (*iv*). As the linear displacement between each of the heads is identical, equal time displacement between the signals from the record and monitor heads on the slave machine and between the replay and monitor heads on the master is achieved for all master/slave speed combinations. The correct monitor head is selected automatically when the desired equalisation selection button, one for each of the combinations shown in the table, is operated.

The monitoring system may be applied for both mono and stereo copying arrangements but a separate head block system is required when dealing with stereo signals. The master monitor heads are single mono units and the comparison is, in this event, of A + B signals. A sensing head on the slave machine is used to detect the presence of any modulation on the tape and thus detect the presence of fault (*f*).

Although any fault in the programme copy may render the copy unfit for broadcasting purposes, it is useful to provide an indication of the type of fault occurring in order to help identify possible causes. Hence, the signal is compared:
(*a*) over the whole frequency spectrum
(*b*) over those frequencies corresponding to 6kHz and above.

A high-frequency loss of signal would, for example, indicate dirt on the heads or an azimuth error.

In addition, it is useful to distinguish transitory faults from permanent failures as these would more likely be the result of emulsion defects than of machine faults.

A block diagram of the system appears at Fig. 2.

3 Comparator circuit

The main features of the comparator circuit (Fig. 3) are:

1. Automatic Gain Control: the output signals from both master and slave machines are applied to the failure comparator in such a way that divergences between them are due to error signals only, over the entire (28dB) dynamic range of the a.c. signal. This is achieved by comparing the rectified and integrated signal from the master unit with a

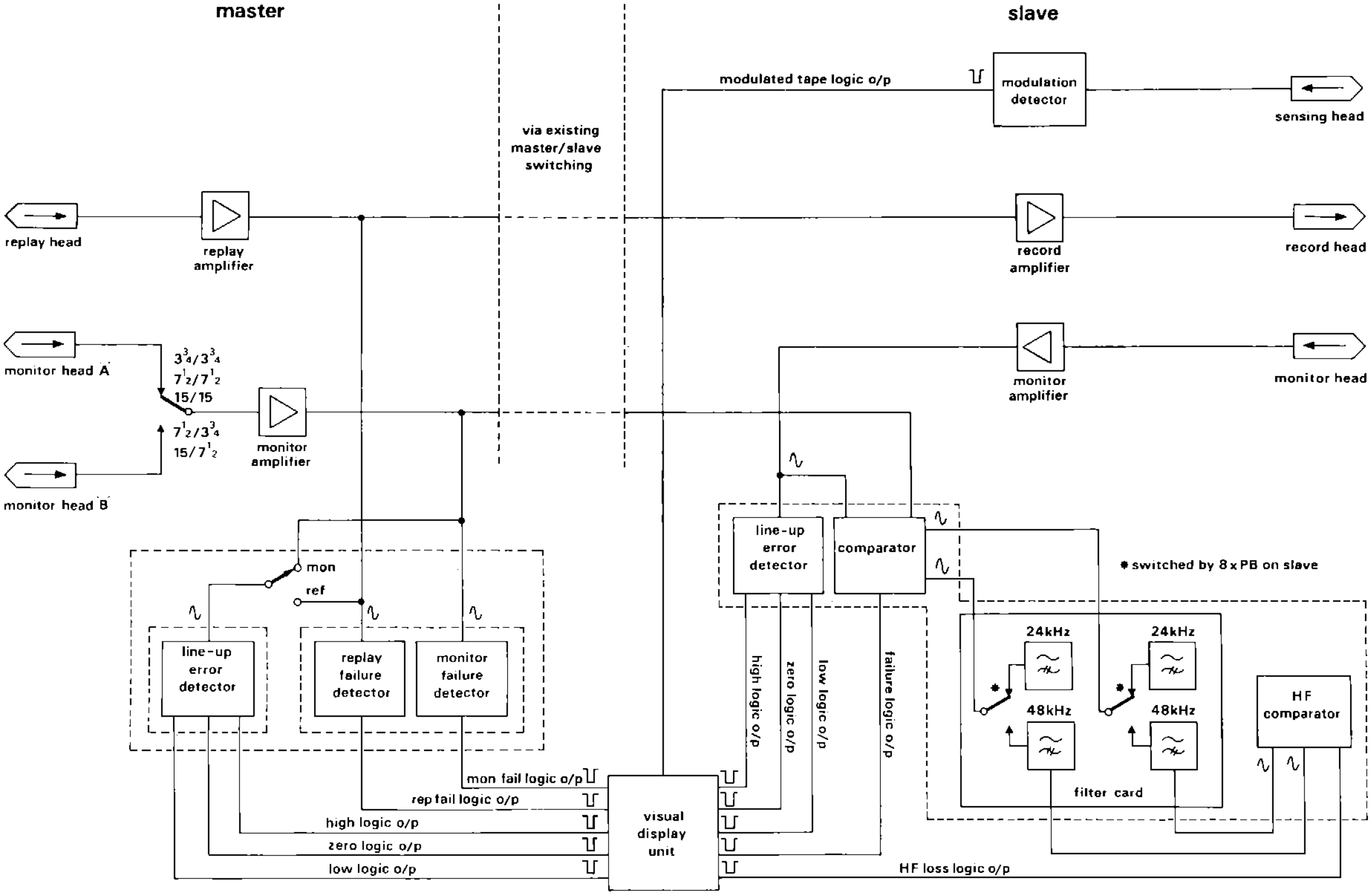

Fig. 2 Block diagram of the monitoring system

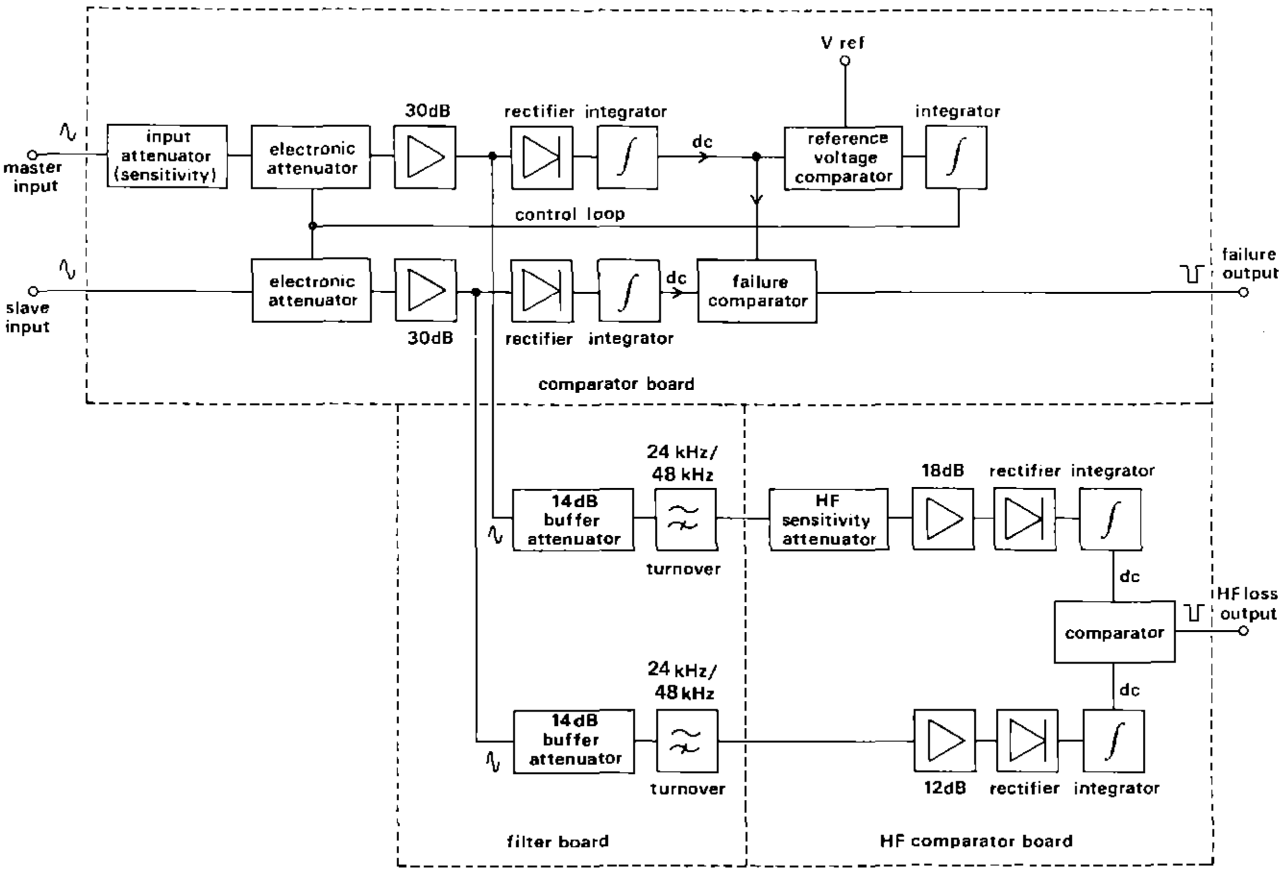

Fig. 3 Block diagram of comparator

reference voltage in another comparator (Reference voltage comparator in Fig. 3) and using the resultant difference signal, where this exists, to control the overall gain of both master and slave circuits so that the failure comparator is presented with constant mean levels at its inputs. The reference voltage is set to permit maximum output for an input level of 20dB below a peak signal of 400pWb/mm.

Further increase in the dynamic range can only be achieved at the expense of some decrease in noise immunity.

2. Integrators: the time-constants of the integrators in the failure comparator are set to allow detection of signal failures exceeding a duration of 5mS at the duplication speed. At normal playback speed this represents a failure of 40mS, below which drop-outs cease to be audibly objectionable. Protection against mains-derived hum is achieved by arranging coupling circuits of 1 mS time constant which provides a turnover at approximately 150Hz, below which the frequency response falls by 18dB per octave. This corresponds to a frequency of 38Hz at the normal play-back speed, 7·5in. sec., and does not seriously affect the operational frequency range of the fault detection system.
3. Sensitivity: the failure comparator will respond to signal level changes of 0·1 dB but by adjustment of an attenuator (A) in the input to the master circuit, differences between 0·1 dB and 14dB can be detected as desired.
4. High Frequency Loss Comparator and Filter Circuits: the inputs to the high-frequency loss comparator are taken from the failure comparator circuit after the automatic gain control and prior to the rectifiers via dual-channel Sallen and Key active high-pass filters. Attenuation of 50dB is given in the first octave below 30kHz or 60kHz depending on whether the 4:1 or 8:1 speed-up is employed. In all other respects the operation of the high-frequency comparison is as described in (1), (2) and (3).

4 Programme failure circuits

Programme failure circuits are fitted to the master machine to check the replay and monitor amplifier output levels. The system is equipped to detect error signals if either output drops more than 36dB below peak level, for periods exceeding 4sec. Normal programme pauses will not operate the alarm system and the sensitivity level is determined by the need to take account of the residual tone signal recorded on the tape during the tape servicing process. Where both output levels are found to be zero, it is assumed that no modulation is present on the tape and a 'BLANK TAPE' indication is given.

5 Line-up detector

The monitoring system provides a quick and easy method for checking equipment alignment and performance by copying a standard test tape on which are recorded frequencies of 1kHz and 10kHz together with an unmodulated section for checking noise figures. Where the replay level of the master machines, the overall level of the master machines or the overall level of the slaves falls outside ±2dB of the normal line-up level, a 'HIGH' or 'LOW' indication is shown on the visual display unit. Where the signal is within these limits, a zero indication is shown. When copying the unmodulated section, a 'NOISE OUT OF TOLERANCE' indication is given if the replay noise of the master exceeds −55dB or the overall noise of the slave exceeds −50dB. In this manner the line-up state of all machines is displayed simultaneously.

6 Visual display unit

The error signals obtained are used to drive a visual indicator via appropriate logic circuits and display, in words on a screen, the nature of the fault together with its location. Transitory failures result in a 'DROP OUT' indication while a 'FAILURE' is displayed for permanent loss of signal. Signal losses above 6kHz tive rise to 'HF LOSS' indication, while the detection of a signal on the slave sensing head indicates 'MOD TAPE'. Examples of complete messages are:

'SLAVE 1 H.F. LOSS'
'SLAVE 2 DROP OUT'
'MASTER 2 REPLAY FAILURE'
'BLANK TAPE MASTER 1'

All error indications are accompanied by an audible alarm.

Fig. 4 shows the monitoring control panel and visual display unit and a close-up view of a typical display is shown in Fig. 5.

Fig. 5 Close-up of visual display unit showing typical fault display

7 System tolerances

The electrical tolerance for magnetic tape characteristics required by the BBC for broadcast purposes specifies that the variation in output level at 10kHz for a replay speed of $7\frac{1}{2}$ in./sec. should be within ±1dB. Random excursions not exceeding 2dB outside these limits for periods not greater than 0·5sec. are permitted and a further ±1dB variation is allowed for the record/replay process. A total of 4dB spread is, therefore, possible and the monitoring system must accept this range of operation and must not indicate a fault unless variations fall outside these limits.

8 Reverse copying

As indicated earlier, reverse copying in High Speed Duplicating has two main advantages:

1. system efficiency is improved considerably, and
2. a satisfactory standard of winding is more easily achieved.

As it is necessary to provide a full standard unit length of tape as a final product, it is essential that the correct amount of

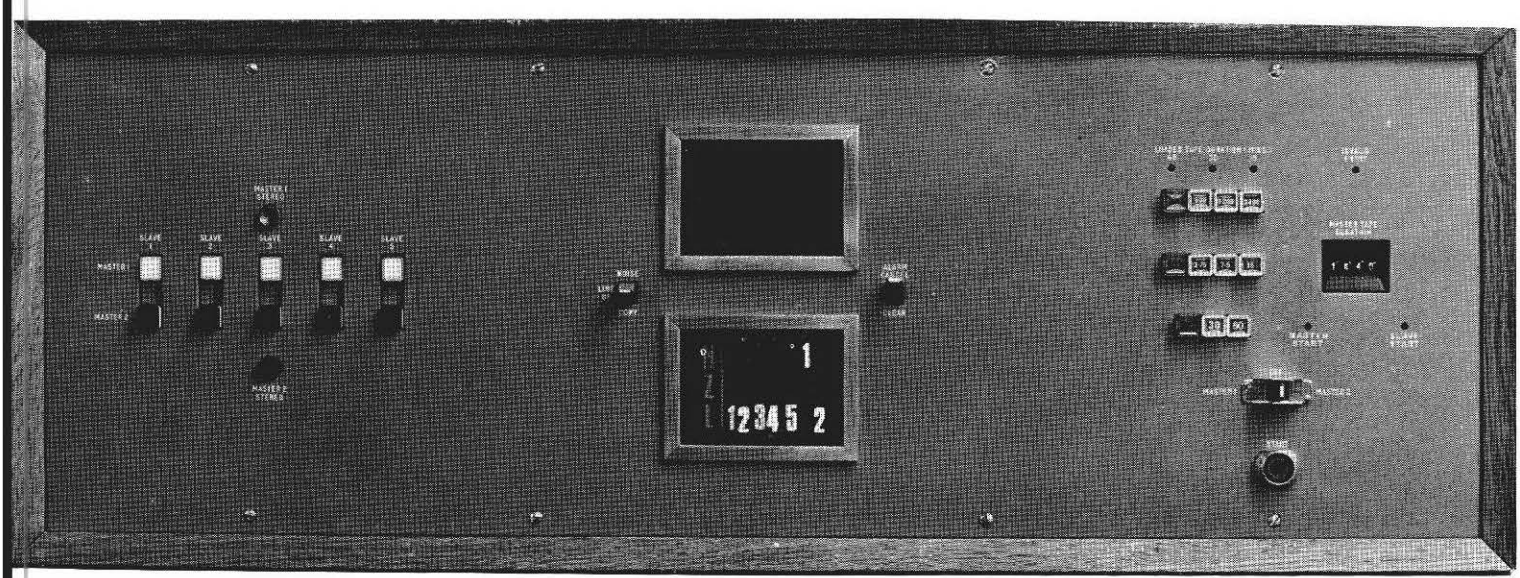

Fig. 4 Automatic monitoring control panel showing (centre) visual display unit and (right) controls for reverse copying

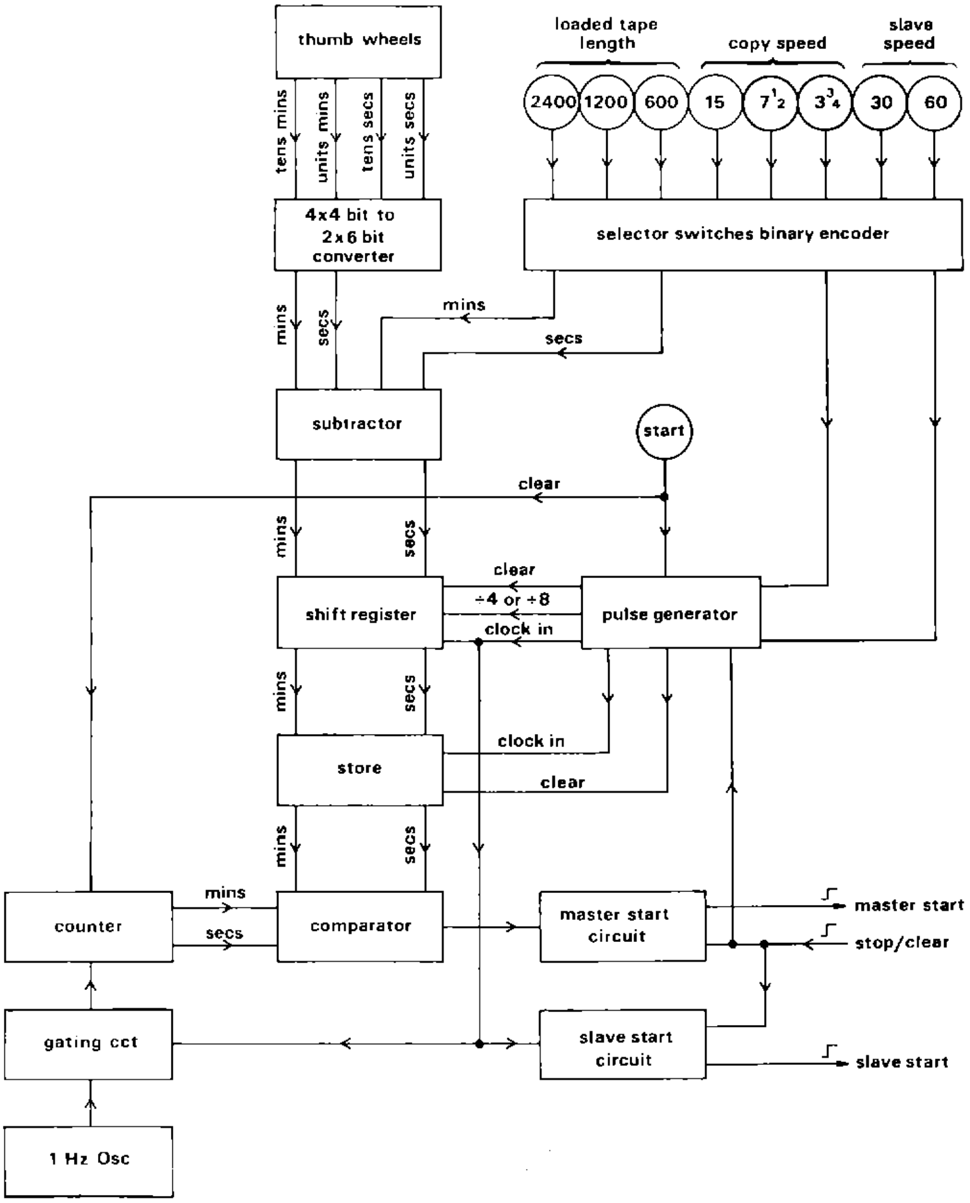

Fig. 6 Block diagram of control arrangement for reverse copying

blank tape precedes the modulation on the slave recording units. (A standard length normally equates to multiples of 15 minutes). To achieve this automatically, account must be taken of the following:

(*a*) Speed of copy (15, 7½, 3¾ in./sec.)
(*b*) Length of tape loaded (2400ft, 1200ft, 600ft)
(*c*) Speed of slave recorders (60, 30in./sec.)
(*d*) Master tape duration (min./sec.)

From the above, the total duration playing time of the tape copies (modulation plus blank) may be obtained, and the real time interval between the start of slave recorder and the master reproducer to achieve the correct length of tape may be determined. A margin of tolerance is allowed in equating standard length units, for example, 2400ft of tape at 15in./sec. will run for 32 minutes and this length of unit would normally be used for a programme of ½-hour duration. Detection of a 'BLANK TAPE MASTER' signal via the normal Monitoring System stops the slave machines automatically.

A Block Diagram of the arrangement appears in Fig. 6.

9 System operation

The outputs of the 'tape length' and the 'copy speed' selection switches are combined logically to derive the 'loaded tape duration'. The loaded tape duration is entered and coded in terms of two 6-bit binary numbers corresponding to minutes and seconds (60m 60sec., 30m 60sec., 15m 60sec.). By presenting the information in this way, no carry-over is necessary during subtraction. Where a duration of greater than 61 min or less than 15min is calculated an invalid indication is obtained. The outputs of the 'Copy Speed' switches and the

'Slave Speed' switches, are combined to determine the speed-up ratio. The duration of the master copy is entered by thumbwheels in the memory unit, which mechanically translates this information to four 4-bit binary numbers. These must be converted to two 6-bit binary numbers to enable subtraction from the loaded tape duration to be carried out. The remainder is held in a Shift Register and is divided by the speed-up ratio (4 or 8). The data are transferred to a further store by operation of the panel start button and the output applied to one input of a binary adder after inversion. At this time the slave recorder starts to run.

The output of a counter driven by a 1 Hz oscillator is applied to the complementary input of the adder and an executive signal derived when the correct master/slave start-time difference has elapsed. This signal causes the master reproducer machine to start. Normal detection of the 'Blank Tape' signal is used to stop the slave record units and the master reproducer will be stopped in the normal way, by the 'end of tape' switch. A finished copy is then available which is made up of a standard full reel unit of tape correctly wound and ready for immediate despatch.

Acknowledgements

The automatic monitoring system described was developed in the External Broadcasting Engineering Department of the BBC in 1973.

One of the authors (P. M. Johnson) led a small team of engineers who were concerned with the detailed development. J. R. Campion suggested the method of approach and provided overall direction of the work.

Contributors to this issue

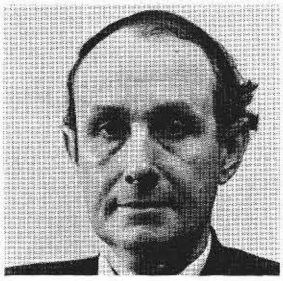

Brian Bower was educated at Hymers College, Hull, and St John's College, Cambridge, graduating in Electrical Engineering in 1950. After National Service in REME and a period with British Telecommunications Research Ltd, Taplow, he joined the BBC Designs Department in 1955. At first, he worked on experimental colour television equipment and then on development of new video equipment for the Television Centre, which opened in 1960. After this, he transferred to radio frequency work where he has been mainly concerned with the design of v.h.f. f.m. transmitters, receivers and transposers.

He is an active radio amateur with special interests in long-distance v.h.f. and u.h.f. propagation and communication through artificial satellites.

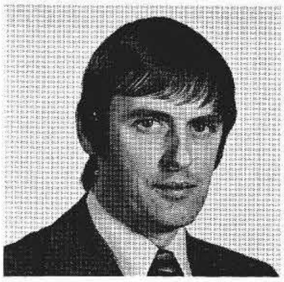

Malcolm Harman joined the BBC in 1960 as a Direct Entry Engineer. During his first year he worked with Television Outside Broadcasts, Radio Links Unit and then became a member of Television Recording Section at Lime Grove. In 1961 he joined Research Department as an engineer in what was then known as Field Strength Section and contributed to planning the coverage expansion of the v.h.f./u.h.f. Television and Radio Networks. He spent between 1969 and 1974 with Transmitter Department Head Office Staff and has now returned to Service Planning work at Research Department as Head of a Special Projects unit.

P. M. Johnson joined the BBC in 1959 as a Technical Operator within Externa Services and qualified as an Engineer in 1966. He is engaged in all aspects of studio and control engineering involved with the origination, assembly and distribution of programme material for broadcast purposes. He leads a small team of engineering staff in providing solutions to day-to-day engineering problems which arise in a large sound broadcasting complex.

Philip Knight read Natural Science at Cambridge University and joined the BBC in 1947 after two and a half years in the Navy and six months at the Metropolitan-Vickers Electrical Company. Nearly all his time with the BBC has been spent in the Research Department, where he has been concerned with aerial design and radiowave propagation. He has made a detailed study of certain aspects of ionospheric propagation and was awarded a PhD. by London University for his work.

L. Richardson joined the BBC in 1943 and served at a number of transmitting stations. He moved to the Research Department in 1949 and was involved in the early experimental work which preceded the adoption of the present-day television line standards and the origination of video signals from studio and film sources for subsequent transmission in colour using the present-day television standards. He was appointed to the post of Engineer-in-Charge of the BBC's External Services Studio Centre at Bush House, London, in 1964 and to his present post in 1970. In this capacity he is responsible for the operations and maintenance of the studio centre dealing with the origination, assembly and distribution of network programme material for transmission overseas via the h.f., m.f. and v.h.f. transmitters of the BBC External Services.

Ronald Sandell joined Research Department in 1954 after a period in Operations & Maintenance (Studios). Since 1959 he has been associated with the planning of transmitter networks and has been particularly concerned with the development of the u.h.f. television service from its inception. In 1965 he became a BBC representative on the European Broadcasting Union Working Party dealing with Television and FM Sound Broadcasting and through this channel has been actively engaged on several aspects of the international planning of broadcasting. Part of these activities has, since 1972, included the investigation of traffic information broadcasting.

In 1972, he became Head of Service Planning Section.

David Stripp joined the BBC straight from University in 1955, initially as an operator in London control room and later becoming a Maintenance Engineer.

From the start of the stereo experiments in 1958, he was responsible for all the stereo equipment and also undertook mixing and control of most types of stereo programme. When stereo ceased to be purely experimental in 1966, he joined the headquarters staff of Radio Broadcasting Engineering to supervise the wider introduction of stereo and the training of technical and production staff.

In 1972, he was appointed Assistant (Standards and Acoustics) to the Assistant Chief Engineer Radio Broadcasting, and is responsible for the sound quality of radio programmes, from the acoustics of the studios through all types of equipment and their unobtrusive operation, to checking the transmitted signals.

Donald Susans joined the BBC in 1940 and worked in the London control room for eighteen months. He then joined the RAF and, after his war service, returned to the BBC in the Field Strength Section of Research Department. Here he was mainly concerned with the development of the measuring equipment used by that Section for v.h.f. and u.h.f. transmitter site test and service area measurements. Since 1968 he has been with the Radio Frequency Systems Section of Research Department working on advanced sound and television receiving systems.