Electronics & Technology Today

$3.95
MM70924

Canada's Magazine for High-tech Discovery

February 1988

The Amiga 500
Low Cost 32 bit computing

Balanced Audio Lines and how they work

Projects:
Car Alarm
Metronome
Audio Power Meter

The Physics of Music:
The Sound Level Meter

0 57438 70924 1

World Radio History

The BES

IBM PC, XT and AT Compatibles Des

BEST AVX-386

Basic System, Standard Features • MS DOS and UNIX Compatible • Based on 32 bit INTEL 80386 Microprocessor • Phoenix BIOS • Overall AT compatibility with significant additional features **Software Selectable Speed** • 16MHz or 8MHz **Disk Storage: two Floppy 5 1/4 inch diskette drives** • Drive A: 1.2 Megabytes capacity • Drive B: 360 Kilobytes capacity **Memory Capacity** • 2 Megabytes of RAM or • 8 Megabytes of RAM **Standard Peripheral Interfaces** • One serial interface • Parallel Printer Interface • Game/Joystick port • AT Compatible Real Time Clock/Calendar with Battery Backup • Hardware Reset switch • 10 expansion slots: 6 IBM AT compatible expansion slots; 4 IBM PC compatible expansion slots **Power Supply** • 200 watt total power, 90 to 132 VAC-50/60HZ, 198 to 264 VAC-50/60HZ • Switched and fused Auxilary power connector

BEST COMPACT 286

Basic System, Standard Features • IBM AT Compatible • Based on 16 bit INTEL 80286 Microprocessor • Phoenix BIOS • 8MHz system clock speed **Disk Storage: one Floppy 5 1/4 inch diskette drive** • Drive A: 360 Kilobytes capacity **Memory Capacity** • 640 Kilobytes of RAM **Standard Peripheral Interfaces** • AT Compatible Real Time Clock/Calendar with Battery Backup • Hardware Reset switch • 7 expansion Slots: 2 IBM PC compatible expansion slots; 5 IBM AT compatible expansion slots **Power supply** • 130 watt total power, 90 to 132 VAC-50/60HZ, 198 to 264 VAC-50/60HZ • Switched and fused Auxiliary power connector

BEST COMPACT 86

Basic System, Standard Features • IBM PC/XT Compatible • Based on 16 bit INTEL 8086-2 Microprocessor • Phoenix BIOS **Hardware Selectable Speed** • 8MHz or 4.77 MHz **Disk Storage: one Floppy 5 1/4 inch diskette drive** • Drive A: 360 Kilobytes capacity **Memory Capacity** • 256 Kilobytes of RAM **Standard Peripheral Interfaces** • Hardware Reset switch • 7 IBM PC/XT compatible expansion slots **Power Supply** 130 watt total power, 90 to 132 VAC-50/60HZ, 198 to 264 VAC-50HZ

BEST WARRANTY

DESKTOP PUBLISHING

BEST Desktop Publishing Packages can be customized to your specific needs. With any of our systems, you can easily produce professional reports, documents and newsletters without the usual delay and aggravations. You and your creative ability are the only limits that a **BEST** Desktop Publishing system will encounter. Contact us for further information.

Best Systems Corporation of Canada Inc.

HEAD OFFICE 6315 KESTREL ROAD MISSISSAUGA ONTARIO 1-800-387-6995 FAX (416) 673-1188

World Radio History

ST Range

gned and Made in Canada

BEST MARK III

Basic System, Standard Features • IBM PC/XT Compatible • Based on 8 bit INTEL 8088-2 Microprocessor • Phoenix BIOS **Hardware Selectable Speed** • 8MHz or 4.77MHz **Disk Storage: two Floppy 5 1/4 inch diskette drives** • Drive A: 360 Kilobytes capacity • Drive B: 360 Kilobytes capacity **Memory Capacity** • 640 Kilobytes of RAM **Standard Peripheral Interfaces** • Two serial interfaces • Parallel Printer interface • Real Time Clock/Calendar with Battery Backup • Hardware Reset switch • 7 IBM PC/XT compatible expansion slots **Power Supply** • 130 watt total power, 90 to 132 VAC-50/60HZ, 198 to 264 VAC-50/60HZ • Switched and fused Auxiliary power connector.

BEST MARK IV

Basic System, Standard Features • IBM PC/XT Compatible • Based on 16 bit INTEL 80C86-2 Microprocessor • Phoenix BIOS **Hardware Selectable Speed** • 8MHz or 4.77MHz **Disk Storage: two Floppy 5 1/4 inch diskette drives** • Drive A: 360 Kilobytes capacity • Drive B: 360 Kilobytes capacity **Memory Capacity** • 640 Kilobytes of RAM **Standard Peripheral Interfaces** • Two serial interfaces • Parallel Printer interface • Real Time Clock/Calendar with Battery Backup • Hardware Reset switch • 7 IBM PC/XT compatible expansion slots **Power Supply** • 130 watt total power, 90 to 132 VAC-50/60HZ, 198 to 264 VAC-50/60HZ • Switched and fused Auxiliary power connector.

BEST AVT 10-286

Basic System, Standard Features • IBM AT Compatible • Based on 16 bit INTEL 80286 Microprocessor • Phoenix BIOS **Hardware Selectable Speed** • 10/8MHz or 10/6MHz **Disk Storage: two Floppy 5 1/4 inch diskette drives** • Drive A: 1.2 Megabytes capacity • Drive B: 360 Kilobytes capacity **Memory Capacity** • 640 Kilobytes of RAM or • 2 Megabytes of RAM expandable to 4 Megabytes **Standard Peripheral Interfaces** • Two serial interfaces • Parallel Printer Interface • AT Compatible Real Time Clock/Calendar with Battery Backup • Hardware Reset switch • 7 expansion slots: 2 IBM PC compatible expansion slots; 5 IBM AT compatible expansion slots **Power Supply** • 200 watt total power, 90 to 132 VAC-50/60HZ, 198 to 264 VAC-50/60HZ • Switched and fused Auxiliary power connector.

NETWORKING

Let out qualified staff design a network configuration for your specific needs. We have a wide selection of **BEST** computers from which to choose along with our **BEST** Network Card, **BEST** 8-Port Active Hub and Passive Splitters, all locally manufactured and supported. Contact us for no-obligation advice and free, price-competitive estimate. We also provide **FREE** introductory seminars; full courses available. We have considerable experience in installing and commissioning complete systems.

BEST

SEVERAL LOCATIONS TO SERVE YOU. JUST CALL (416) 673-5111

World Radio History

Circle No. 3 on Reader Service Card

Toshiba has just given the portable laptop

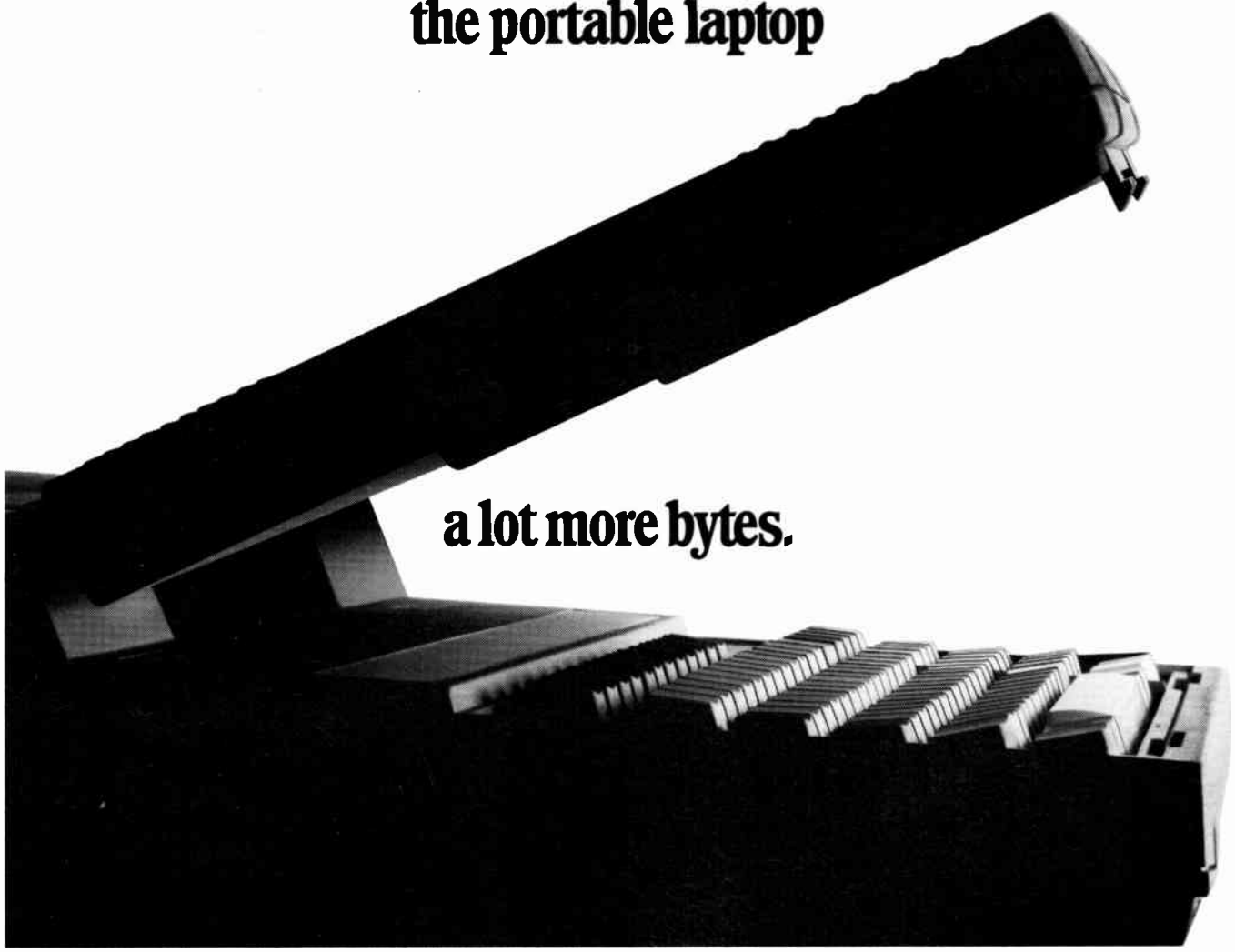

a lot more bytes.

Introducing the exciting new Toshiba T3200. The portable laptop computer designed to take a big bite out of the desktop AT market.

While you're chewing over that data, consider some other major features of the T3200. It's a portable laptop that comes standard with one and one-half internal IBM*-compatible slots for hardware expansion and a fast 40-megabyte internal hard disk drive.

The T3200 moves fast too, with an 80286 microprocessor running at 12MHz. It's also very easy to read, with a superb Gas Plasma screen which is EGA (Enhanced Graphics Adapter) compatible. And it has even more bytes with the standard one megabyte of RAM, upgradable to four megabytes. There's also a separate numeric keypad within the full standard keyboard, for real ease of use. And with all this, there's the added advantage of true portability.

To learn more about the multi-purpose T3200, place a call to your authorized Toshiba re-seller, or call Toshiba direct at 1-800-387-5645. Ask for a demonstration. Once you've had a taste of the new T3200, you'll be spoiled for any other PC, desktop or portable.

The best keep getting better!

TOSHIBA

WE MEAN BUSINESS
INFORMATION SYSTEMS DIVISION

*IBM is a registered trademark of International Business Machines Corporation.

Circle No. 4 on Reader Service Card

World Radio History

Electronics & Technology Today

Canada's Magazine for High-tech Discovery

Volume 12, Number 2 *February, 1988*

The Amiga 500, page 18, and the Radio Shack Sound Level Meter, page 22, were photographed by Bill Markwick.

Features

Amiga 500 Review 18
Affordable 32-bit computing power in a compact package.

Physics of Music, Part 4 22
Watching your music with a Sound Level Meter.

The Scientists Tell Me 43
David Dempster's regular column on the world of science.

Technology

Image Processing 9
How photos are computer enhanced to increase contrast and detail.

Balanced Audio Lines 30
How and why those 3-wire audio lines reject noise and hum.

Projects

Accented Beat Metronome..... 38
Build this project and you won't lose count.

Car Alarm 45
Make your own auto security system.

Audio Power Meter..... 49
A simple yet accurate way to measure your audio watts.

INFORMATION

For Your Information.....6
Classifieds 12
Next Month 25
Toshiba Contest 26
Books 28
Order Form..... 41
Subscriptions..... 41
Market Place..... 48
Advertiser's Index 54

18

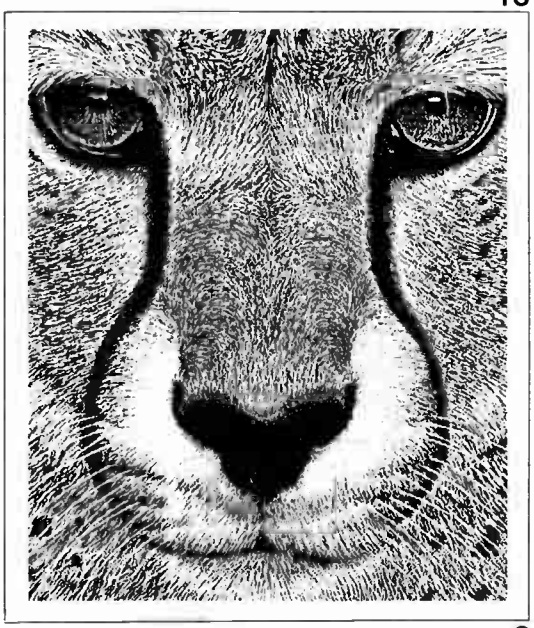

9

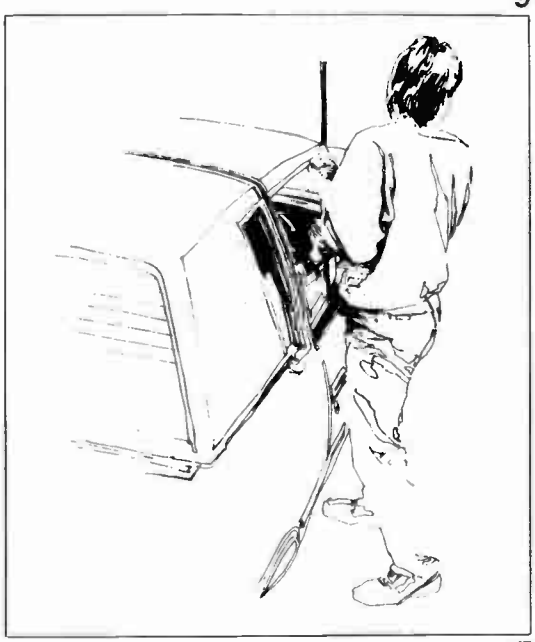

45

World Radio History

For Your Information

Real-Time Data Acquisition

The SDI (nothing to do with Star Wars) Signal-to-Disk Interface from Ariel Corporation allows host independent, real- time, full bandwidth data acquisition to disk, as well as signal editing and processing for any PC.

An Ariel DSP-16 Data Acquisition Processor combined with a high speed SCSI interface and the Ariel DSPDISK software, permits recording and playback on up to seven high capacity memory devices. SDI allows direct-to-disk recording/playback of 16-bit data at sample rates of up to 50 KHz on two channels simultaneously. The recorded signal can be viewed graphically and edited; parts of the signal can be marked, zoomed, moved, repeated, attenuated, deleted; special effects can be added; and the revised signal can be saved and played back.

The software is menu driven with all features controlled by either function keys, cursor, or mouse. DSPDOS allows users and third parties to develop programs for custom applications.

The system includes a DSP-16, an SCSI piggyback card, DSPDISK and DSPDOS, and a choice of a 50 or 250 Mbyte internal or external hard drive, or an 800 Mbyte WORM drive. Prices start at $3495 (US).

For more information contact: Elizabeth K. Vanderbilt, Ariel Corporation, 110 Greene Street, Suite 404, New York, NY 10012. Tel: (212) 925-4155.

Circle No. 59 on Reader Service Card

Video Image Analyzer

The VIDEOMEX-V is designed to measure movements (activity) of objects, humans or animals through rapid real time video picture acquisition and analysis.

The unit is equipped with a 68000 processor for rapid information processing as fast as 30 frames per second, at 256 x 192 resolution, from any standard PAL, NTSC, or SECAM TV camera or recorder video signal.

Complete connectability is possible with external computers through an RS232 port, and results can be printed on an external printer. Several programs for image processing can be resident in the on-board memory and any program can be selected by the operator using front panel controls.

The VIDEOMEX-V can make measurements in real time or from data previously recorded on video tape. Applications range from measurement of human and animal motion to microscopic motion measurements. It can also be used to monitor hazardous areas, setting off an alarm to warn of intrusion.

Software is available for measuring motion of multiple objects in a variety of situations, distance travelled, time and length of contact between two objects and rotation of objects.

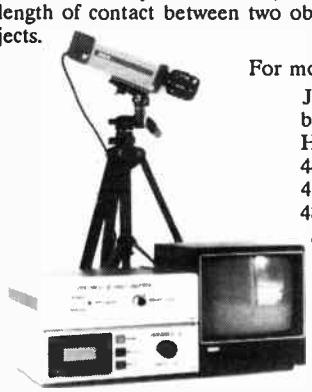

For more information contact: Jan Czekajewski, Columbus Instruments, 950 N. Hague Ave., P.O. Box 44049, Columbus OH 43024 USA. Tel: (614) 488-6176.

Circle No. 60 on Reader Service Card

Happenings

Event: Software/Logiciel Symposium 88
Date: February 3—4, 1988
Location: Metro Convention Centre, Toronto
Contact: William Hutchinson & Co. (416) 498-5344

Event: International Conference on Computers and Law
Date: February 8—10, 1988
Location: Miramar Sheraton Hotel, Santa Monica, CA USA
Contact: Michael Krieger (213) 208-2461

Event: The Business Computer Show
Date: March 2—4, 1988
Location: Automotive Building, CNE, Toronto
Contact: Marion Hart (416) 252-7791

Event: Facsimile & Image Communications Conference
Date: April 11—13, 1988
Location: Marriot Copley Place, Boston Mass.
Contact: Martha Johnson (617) 837-1341

Event: Canadian High Tech Show
Location: Lansdowne Park, Ottawa
Date: May 3—4, 1988
Contact: CHTS (613) 731-9850

Event: CIPS' Congress '88 (Can. Info. Processing Society)
Date: May 18—20, 1988
Location: Metro Convention Centre, Toronto
Contact: CIPS (416) 593-4040

Event: EEMAC Annual Conference
Location: Lowes Concorde Hotel, Quebec City
Date: June 8—10, 1988
Contact: EEMAC (416) 674-7410

The Standards Approval Group Inc. would like to announce the opening of their new corporate headquarters located at 175 Traders Boulevard East, Mississauga, Ontario. Along with their recently launched EMI test facility in the Caledon Hills, north of Toronto, Standards Approval Group offers one-stop testing and certification for computer and communications-related products.

Last month we published an incorrect phone number for the Standards Approval Group, the correct phone number is 890-2800. Our apologies to anyone who may have been inconvenienced by this error.

Electronics & Technology Today

Electronics & Technology Today is published 12 times a year by:
Moorshead Publications Ltd.
1300 Don Mills Road,
North York, Toronto,
Ontario M3B 3M8
(416) 445-5600
FAX: (416) 445-8149

Editor: William Markwick
Assistant Editor: Edward Zapletal
Director of Production: Erik Blomkwist
Production Manager: Rick Ferrara
Circulation Manager: Sharon Cernecca
Advertising Manager: David Stone

President: H.W. Moorshead
Publisher & Executive Vice-President: V.K. Marskell
Vice-President - Sales: A. Wheeler
Vice-President - Finance: B. Shankman
Production: Kevan Buss, Naznin Sunderji
Accounts: P. Dunphy
Reader Services: K. Parkinson, R. Cree
Advertising Services: H. Brooks

Newsstand Distribution: Master Media, Oakville, Ontario

Subscriptions:
$22.95 (one year), $37.95 (two years).
Please specify if subscription is new or a renewal.

Outside Canada (US Dollars). U.S.A. add $3.00 per year. Other countries add $5.00 per year.

Postal Information:
Second Class Mail Registration No. 3955.
Mailing address for subscription orders, undeliverable copies and change of address notice is:
Electronics & Technology Today,
1300 Don Mills Rd.,
North York, Toronto,
Ontario M3B 3M8.

Printed by Heritage Press Ltd., Mississauga, Ontario ISSN 07038984

Moorshead Publications also publishes Pets Magazine, Computing Now!, Computers In Education, and Government Purchasing Guide.

Circulation independently audited by MURPHY & MURPHY Chartered Accountants.

World Radio History

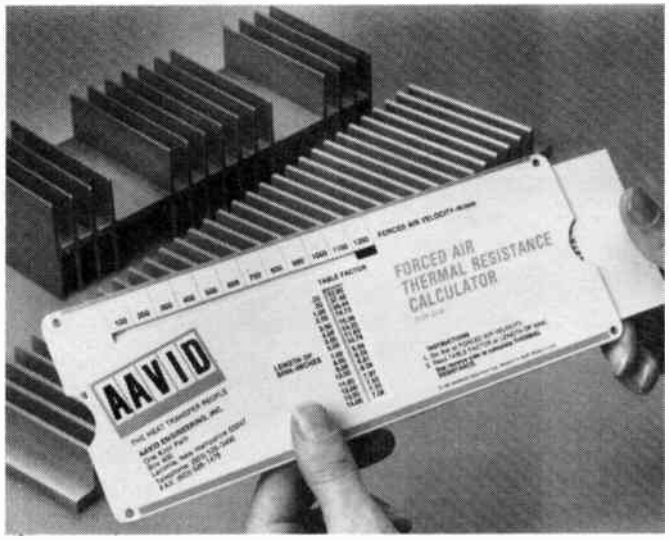

Free Slide Chart

A new slide chart for determining the thermal resistance of extruded heat sinks is available, free, from Aavid Engineering, Inc. Engineers will find this particularly useful for calculating thermal performance more easily, quickly, and accurately.

The Forced-Air Thermal Resistance Calculator can be used to determine any of the following parameters: air flow velocity; thermal resistance; heat sink length; or heat sink cross section.

In addition, the slide chart includes conversion ratios for calculating natural convection thermal resistance for heat sink extrusions from 1 inch to 15 inches long.

For more information contact: Future Electronics, 237 Hymus Blvd., Pointe Claire, Quebec, H9R 5C7.

Circle No. 50 on Reader Service Card

Digital Insulation Resistance Tester

The Model 3001 from Kyoritsu is a compact, light weight, 3 1/2 digit insulation resistance tester with test voltages of 500V and 1000V at 200 Mohms. The unit has autoranging (2/20/200Mohm) and continuity up to 200 ohms.

Other features include: live circuit warning, automatic discharge of circuit capacitance when Test button is released, overload protection and LED battery check.

The 3001 comes complete with test leads, case, and a two year parts and labor warranty.

For more information contact: Omnitronix Ltd., 2410 Dunwin Drive #4, Mississauga, Ontario L5L 1J9. Telex 06-22324

Circle No. 51 on Reader Service Card

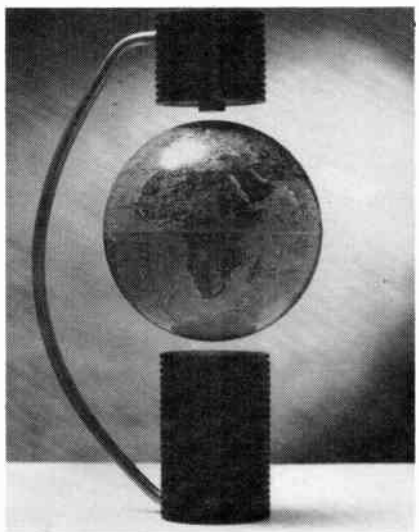

Magnetic Levitation Globe

Black magic? Mirrors? Slight of hand? Nope, it's the world magnetically levitated right before your eyes, and it's brought to you by Maglev Sales of Vancouver B.C.

The six inch maglev globe is based on the same operating principle as the levitated train currently being tested by Japan Airlines. The method used is to electronically sense the position of the globe and regulate the power of the magnets which lift it.

Great for the science class or as a novelty for the desk, the globe is available from Maglev Sales at a cost of $189 (US). You can reach them at: 1030 West Georgia Street - Suite 31, Vancouver, B.C. V6E 2Y3. Tel: (604) 682-5824.

Circle No. 52 on Reader Service Card

Hioki LCR Tester

The 3520 LCR tester from Hioki will aid in improving reliability of electronic parts and materials such as capacitors, coils, resistors and insulators by evaluating them under almost-actual conditions.

The unit features a range of frequencies from 40 Hz to 100 KHz, selectable signal levels in 11 steps up to 1 VACRMS, and two selectable test modes (serial equivalent and parallel equivalent).

In addition, the unit is equipped with a GPIB interface for connection to automatic measurement equipment offering greater precision in selecting frequency and signal levels. Other features include: residual charge protection circuit for capacitors; 4-terminal measurement system; DC biasing; and a function lock to guard against incorrect readings due to accidental setting changes.

For more information on the 3520 contact: RCC Electronics, 310 Judson Street, Unit 19 ,Toronto, Ontario M8Z 5T6. Tel: (416) 252-5094 Fax: (416) 252-3031

Circle No. 53 on Reader Service Card

World Radio History

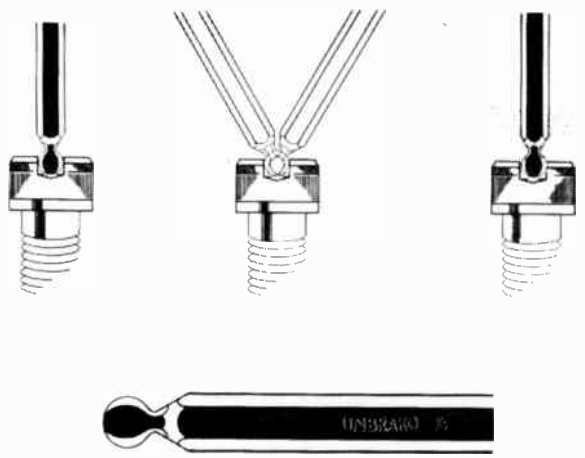

Ballpoint Hex Keys

Unbrako offers a full line of ballpoint hex keys in sizes from .050" to 3/8" that permit angled entry and full socket engagement. Socket screws can be tightened at angles up to 30 degrees, allowing access to sockets located in extremely confined areas. Alignment of socket and wrench is facilitated by the ballpoint tip, even in areas of limited visibility.

The keys are available in two configurations: screwdriver-type with handles proportioned to allow the user to reach maximum recommended ballpoint hex key torque, and in an L- wrench shape that offers two tools in one, with the ballpoint for off-axis driving and the long arm which furnishes the leverage for full torque.

Contact: Larry Simpson, Standco Canada Ltd., 101 Spinnaker Way, Concord, Ontario L4K 2T2. Tel: (416) 738-4050.

Circle No. 58 on Reader Service Card

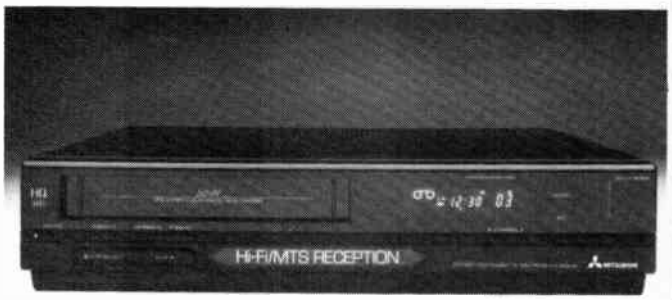

Hi-Fi VCR

The Mitsubishi HS-402UR features HQ circuitry, 25- function infrared remote with direct channel access, VHS Hi-Fi with stereo MTS/SAP reception, 107 channel tuner, and 5-event/2 week programmability.

Other features include auto-rewind, auto-on play, auto record protection, and power off eject. Available from authorized Mitsubishi dealers across Canada.

Contact: Product Manager, Mitsubishi Electric Sales Canada Inc., 8885 Woodbine Avenue, Markham, Ontario L3R 5G1. Tel: (416) 475-7728.

Circle No. 61 on Reader Service Card

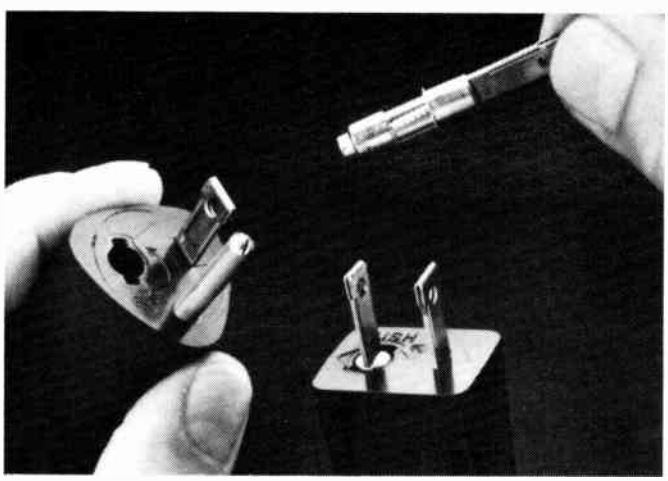

Fused Line Cord

Belden's new Fused Line Cord is available in two and three-conductor sizes, and features a field-replaceable fuse as part of the male termination.

Ideal in a broad range of applications where shorts and overloads are a concern, such as in personal computers, home appliances and tools, the FLC is available in a range of fuse ratings from 1/4 to 6 amps depending on the application.

The Fused Line Cord also provides circuit selectivity. Previously, a fault would cause a loss of power to the entire circuit, but with FLC the fault is isolated leaving the rest of the circuit to operate normally.

The field-replaceable Buss fuse is integrally mounted into the male end of the line cord. It is simple to replace; no tools are required.

Available from Canadian Belden distributors or for more information contact: Belden Division of Cooper Industries, 2000 South Batavia Ave., Geneva, Illinois 60134. Tel: (312) 232-8900.

Circle No. 64 on Reader Service Card

Service Technicians Take Note!

CELTRON-1 is a feature-packed remote infrared and ultrasonic transmitter tester. It tests transmitters quickly and easily, and displays test results by both a green LED and audible 'beep'. CELTRON fits neatly into your shirt pocket (with all those other pocket size instruments) ensuring that it will always be handy. AUTO-OFF allows for longer battery life, while a handy scope/frequency counter test jack allows for the utmost in accurate testing.

Ideal for testing TVs and TV converters, satellite receivers, VCRs, CDs, stereos, alarm systems... the list is endless. The price is right too! But you'll have to contact CableServ Electronics Ltd., 18 Dufflaw Road, Toronto, Ontario M6A 1C8 to get the bottom line. Or phone 'em at (416) 789-4581. Or...

Circle No. 65 on Reader Service Card

World Radio History

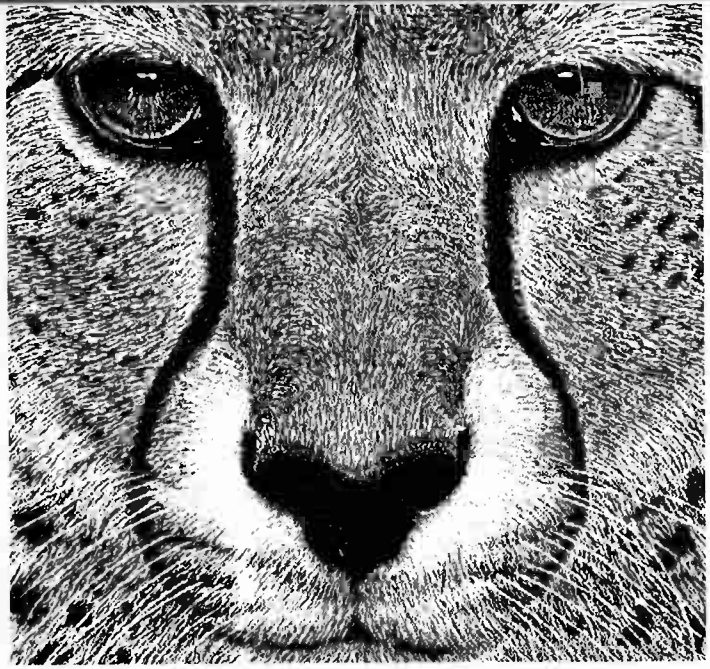

Electronic Image Processing

A look at how far image processing has progressed.

By Dr. H. Virani

Electronic image processing is now about two decades old. The field has experienced accelerated international interest in this relatively short time and already the volume of original research work has reached staggering proportions. This is not surprising for two major reasons.

First, the use of computers is central to the processing of picture information in digital form and the cost/performance improvements in computing hardware have been sustained at very high levels throughout this period. This has encouraged the expansion of image processing methods based upon the computer realization of mathematical models of a wide range of imaging problems expressible fundamentally from the spatial distribution of intensity data, usually in two dimensions and frequently restricted to monochrome images. The rapidly increasing computational capability and low cost RAM for modern computers has permitted research experiments within manageable time frames and at acceptable cost.

The second major impetus in the field has been the immediate recognition of the outstanding potential for the use of imaging in an extensive range of commercial and industrial applications. This too has been reflected in the number of application orientated papers in the literature and the dedication of some conferences to this particular aspect.

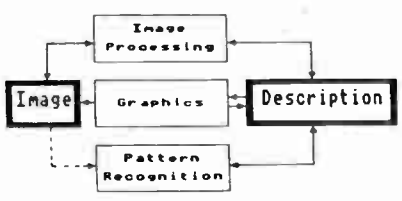

Fig.1 The interaction of the three major components of the image processing system.

Technical context

The term "image processing" is now widely used but is frequently employed to include the more general processing problems associated with computer graphics and pattern recognition.

Fig. 1 gives the conceptual interaction between these three important areas and expresses the general flow of information in terms of actual data but also in relation to fundamental conceptual idea movement. Strictly speaking each of the areas represents distinct discipline and each has its dedicated protagonists. As far as image processing in its wide sense is concerned, however, it is likely that the most exciting developments will emerge from the exploitation of the interaction summarized in Fig. 1.

Fig. 2 gives a simplified view of the general development phases of image processing as a discipline and indicates the growing awareness of the potential for the application of early theoretical work in the subject.

1	Image capture	Vidicon Digitisers CCD Line scan
2	Image description	1965
3	Linear processing	o
4	Enhancement Restoration	n
5	Analysis	e
6	Coding	s
7	Database engineering	1984 -
8	Real-time imaging	1984 -
9	VLSI image engineering	1985 -

Fig. 2 A simplified view of the general development phases of image processing.

This is particularly apparent from the growth of applications utilizing high performance real-time processing both in conventional computing or microprocessor terms or, more recently, in terms of direct silicon based processing as exemplified by array and generalized VLSI systems.

Fig. 1. represents a simplified view of image processing but illustrates the important principle that many applications will only be realized by a combination of two or even three of the related areas. This fact poses some of the most exciting challenges for the engineer in the generation of viable products.

The Information Engineering Challenge

Fig. 1 expressed the potentially complex interaction between image processing, computer graphics and pattern recognition. In simple terms, image processing accepts an image and converts it to some other via transformation in a mathematically descriptive domain. Since most real-world scenes are two-dimensional this involves a considerable capability in matrix and linear transformation theory but in itself is a straight forward mathematical process lending itself to computer execution.

The modern information engineer will normally be adequately equipped educationally to meet this challenge. However, the realization of image processing algorithms for specific practical applications necessitates the employment of pattern recognition methods. Fig. 3 provides a generalized summary of the inherent functions of pattern recognition systems.

World Radio History

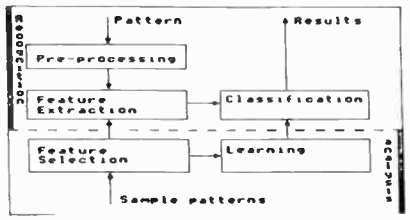

Fig. 3 A generalized summary of the inherent functions of pattern processing

In this approach the primary concern is the classification of patterns through comparisons between the input and samples. The diagram shows the interaction between the activities involved and the flow of data between them. It is clear however, that although the mechanism of operation of the activities must be modelled mathematically and executed in the computer system the underlying principles reach far beyond the rigorous modelling processes. The learning module will be heavily driven by a prior knowledge of the input scene and about the nature of the desired results. This implies that the complete system will require computer modelling of many human perception phenomena.

This particular facet promises to be one of the most challenging components in the successful development of new image processing based systems.

Computational Speed

However this does not imply that all successful hardware systems must attempt to emulate the human visual and perceptive mechanisms although there is much active research in this area.

The most significant impediment to the exploitation of human visual and perceptive mechanisms in hardware is the present inadequacy of performance and speed for available processing equipment. This problem is aggravated by two important factors.

First application dedicated computers are now of the microprocessor type and although impressive computing performance can be achieved with clock rates up to 20 MHZ the hardware architecture is bus bound. This places severe limitation on the possible processing throughput of a particular machine.

Second, many of the more promising applications such as industrial inspection or measurement dictate an image resolution at least up to 512 x 512 pixels giving 265 Kb grey scale data. Linear manipulation of this volume of data is highly memory dependent with consequent degradation of throughput speed. Much of the present research effort is therefore directed towards reducing the volume of image data required and this necessitates sophisticated coding techniques combined with advanced data structure and analytical methods.

An example is the quadcode approach which seeks to code an image by repeated division of the scene into quadrants and coding grey levels in each. The theory of quadtrees and its application is showing considerable promise in the successful reduction in the total bit count required to specify completely an image in a manner which is reversible without significant loss of accuracy.

Gate Array Technology

The requirement for increased computational speed persists despite data volume reduction and this has given accelerated impetus to the search for advanced processing systems.

An excellent example of this is the use of gate array technology to implement rudimentary image processing and pattern recognition algorithms.

Fig. 4 gives a summary of the performance capabilities for a particular family of gate arrays. These arrays are moderately fast with typical switching delays of about 2-6 ns for a 4-input NAND fate cell with a fanout of 4. This technology has the major advantage of being relatively inexpensive for the end user since the basic array elements and the first level of integration into operating cell is prefabricated in the manufacturing domain and only the application specific macro selection and interconnection need be carried out at customer level.

ARRAY	FGC0500	FGC2400	FGC4000	FGC6000
Gates	540	2592	4020	6000
Usable gates	432	2073	3216	4800
Inputs	8	39	47	55
I/O	48	78	86	106
Total I/O	48	109	133	161
Power pins	4	8	8	8
Test pins	8	3	3	3

Fig. 4 A performance summary for a particular family of gate arrays

Large turnkey image processing systems already include array processors which can achieve near real-time performance. However the realization of these systems in the price range appropriate for many applications is still largely uneconomical and this particular challenge remains for the engineer and information engineer to solve.

Systolic Arrays and VLSI

A more recent innovation in high speed processing is the systolic array. A typical array structure is indicated in Fig. 5.

The simplicity and repeatability of the inherently simple structure makes the device an ideal candidate for implementation directly on semiconductor VLSI technology. The regular lattice layout minimizes interconnection distances and hence the operating speed approaches the maximum possible with current semiconductor technology.

The systolic processing mechanism makes the device the natural choice for a wide range of Fourier and Laplace operations which are central to many image processing operations. The automatic pipelining of data flow implies that the complete chip area can be contributing to the accumulation of valuable results at all times and with fundamental clock rates of 25-35 MHZ for 2 micron CMOS technology, this

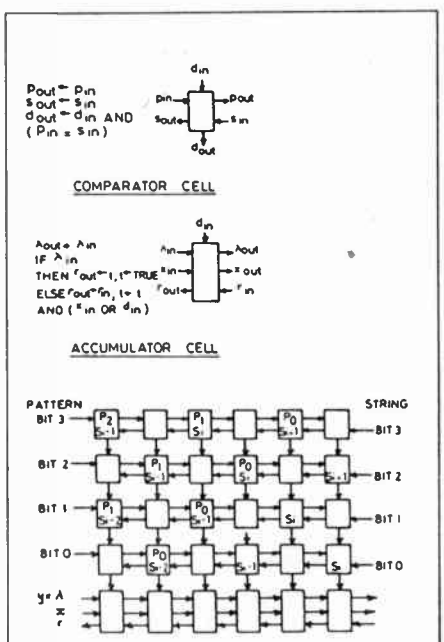

Fig. 5 Representation of a typical array structure.

World Radio History

will provide extremely high throughput rates.

The derivation of a range of suitable basic systolic cells to perform fundamental image algorithms for direct placement on the chips is perhaps the single most significant hardware development in the quest for high speed performance. The exploitation of this principle in practical image systems will yield performance approaching human capabilities and will also permit the computational emulation of many of the rudimentary techniques of human perception.

The technical challenge is now to derive optimal array elements on the basis of the desired image task, and to achieve their hardware realization at high layout density directly on the chip. This represents a fascinating interaction of the skills of the information engineer and those of the micro electronics specialist.

Control Performance

Fig. 6 shows a conventional view of a typical image processing system.

There are two impeding challenges for the engineer in utilizing this system in viable products in real-time. First, the control block is responsible for stimuli and response in the external environment and many industrial processes impose high speed performance if overall tolerance targets are to be met.

An example might be the control of a steel pipe rolling mill where it is desired to provide a continuous non-tactile assessment of pipe cross-sectional dimensions. In turn, this measurement could be used to control the rollers to maintain the pipe quality within prescribed limits. A machine vision system has the potential to cope with the problem but high speed online performance is essential for control system stability. Hence the applicability of machine vision will be severely affected by the processing

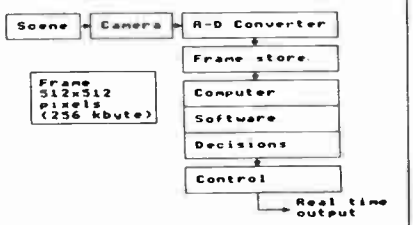

Fig. 6 A conventional view of a typical image processor.

REVOLUTIONARY MULTIMETER

THAT READS 4 VOLTAGES AT THE SAME TIME

CAN ALSO DISPLAY 3 VOLTAGES AND 1 CURRENT AT THE SAME TIME WITH MANY OTHER COMBINATIONS AVAILABLE INCLUDING OUR 4½ DIGIT ANALOG BARGRAPH DISPLAY

MEASURE 4 VOLTAGES AT THE SAME TIME WITH 3½ DIGIT DISPLAYS

1.999V 1.999V
1.999V 1.999V

ALL FUNCTIONS ALL AUTORANGING

MADE IN CANADA

CURRENT
RESISTANCE

VOLTAGE #1
VOLTAGE #2
VOLTAGE #3
VOLTAGE #4
COMMON

2 VOLTAGES AT THE SAME TIME WITH 4½ DIGIT DISPLAYS

1.9999V
1.9999V

ALSO INTRODUCING A NEW CONCEPT

PANORAMIC RESOLUTION

191.990.00
V mV µV

MODEL MM100
$ 189.95

Approx. Size 7" x 4" x 1¾"

OTHER FEATURES
* RELATIVE REFERENCE (100% FULL SCALE)
* HOLD FUNCTION

* CONTINUITY BEEPER ON RESISTANCE CHECK
* MANUAL RANGING ON ALL FUNCTIONS
* COLOR CODED INPUTS TO AVOID CONFUSION
* PROGRAMMABLE SETPOINTS

* ONE YEAR PARTS - LABOUR WARRANTY
* STILL MANY MORE FEATURES

DAETRON 4½ MULTIMETER
"THE HIGH PRODUCTIVITY MULTIMETER"

SPECIAL OFFER
10% OFF TOTAL ORDER WHEN YOU BUY BOTH UNITS

DOES YOUR DIGITAL CAPACITANCE METER DO THIS?

FULL 4 DIGIT 0.5 INCH LCD DISPLAY COMPLETELY AUTORANGING WITH 10 RANGE MANUAL CAPABILITY

AND THIS
RANGE OF 0.0 pF to 1 FARAD (999.9 mF) 0.5% BASIC ACCURACY UP TO 100 uF

AND THIS
READS DIELECTRIC ABSORPTION

AND THIS
EXTENDED PSEUDO 5 DIGIT RESOLUTION ON SOME RANGES ONLY

AND THIS
ABILITY TO ZERO LARGE CAPACITANCE VALUES UP TO 99.99 uF

AND THIS
CALCULATES TRUE CAPACITANCE IF CAPACITOR IS LEAKY

AND THIS
DIODE CLAMP AND FUSED PROTECTED INPUT. DISCHARGE RESISTOR IN OFF POSITION AT TERMINAL INPUTS. POWERED BY 9V BATTERY

ONE YEAR PARTS & LABOUR WARRANTY

AND THIS
IDENTIFIES TRANSISTORS (NPN, PNP) AND THEIR LEADS (E, B, C, ETC.)

AND THIS
TESTS ZENER DIODES AND RECTIFIERS. UP TO 20V ZENER WITH AC ADAPTOR, ZENER VOLTAGE WITH 9V BATTERY DEPENDS ON ITS CONDITION

AND THIS
AUTOMATICALLY CALCULATES LENGTHS OF CABLES IN FEET, METRES, MILES, KILOMETRES (THEORETICAL RANGE OF 9,999 MILES)

AND THIS
ABILITY TO SORT CAPACITORS IN MANY DIFFERENT MODES

AND THIS
ABILITY TO READ LEAKY CAPACITANCE

AND THIS
HOLD FUNCTION FREEZES DISPLAY

MODEL MC300 $169.95

DAETRON (416)676-1600
a division of Bergeron Technologies Inc.
935 THE QUEENSWAY, BOX 641
TORONTO, ONTARIO M8Z 5Y9

[ ] (QTY) MM100 (INCLUDES 1 RED AND 1 BLACK TEST LEADS AND MANUAL) @ $189.95 $ _____
TO AVOID CONFUSION IN READING MANY VOLTAGES AT ONCE WE HIGHLY RECOMMEND ONE OF THE FOLLOWING SETS WHICH ARE MATCHED TO THE COLOR CODED INPUTS OF THE MM100
[ ] TL220 SET OF 6 COLOR COATED LEADS WITH EZ HOOKS @ $39.95 $ _____
[ ] TL230 SET OF 6 COLOR COATED LEADS WITH ALLIGATOR CLIPS @ $39.95 $ _____
[ ] CARRYING CASE, TOUGH LEATHER LIKE AND LARGE ENOUGH TO CARRY A SET OF TL220 OR TL230 LEADS AND INSTRUCTION MANUAL. @ $34.95 $ _____
[ ] _____ (QUANTITY) MC300(S) $169.95 $ _____
[ ] CARRYING CASE FOR MC300 $19.95 $ _____
[ ] AC ADAPTOR (FOR EITHER UNIT) @ $11.00 $ _____
SHIPPING: CHECK ONE OF THE FOLLOWING .....
[ ] UPS (SERVICES TO VICTORIA, VANCOUVER, ONTARIO & MONTREAL ONLY) ADD 2.5%.
[ ] 1ST CLASS MAIL ADD 3%, [ ] COURIER PREPAID ADD 10% $ _____
[ ] COURIER COLLECT (BUSINESS ONLY) $ COLLECT
SUB- TOTAL $ _____
[ ] 10% DISCOUNT, SUB-TOTAL X 0.9 $ _____
ONTARIO RESIDENTS ADD 7% SALES TAX $ _____
[ ] CHECK [ ] MONEY ORDER [ ] VISA [ ] MASTERCARD TOTAL $ _____
[ ] CARD NO. _____ EXPIRY DATE _____ SIGNATURE _____
NAME _____ TELEPHONE NUMBER _____
ADDRESS _____
CITY _____ PROV. _____ POSTAL CODE _____

DEALER ENQUIRIES INVITED

Circle No. 5 on Reader Service Card

World Radio History

Passive Infrared Motion Sensor Kit

Designed for educational and experimental purposes.
All the basics of passive infrared motion-sensing are included: lens, window compatitor trip circuit, dual element pyroelectric sensor. Area of coverage is long and narrow, using a high gain lens.

$30.00 each - Quantity Discounts for 25 units or more.

- Dual element sensor
- 12V D.C. at 14MA
- Relay contacts N.C. 50V D.C. at 1 Amp
- High gain lens, long narrow area
- Includes: Plastic case, P.C.B.
- Detects up to 60 feet

Send cheque or money order plus $2.00 for handling and postage to:

INFRA-TECH LTD.
1602 - 4955 Newton Street
Burnaby, British Columbia
Canada V5H 4B8
(604) 438-5976

Circle No. 6 on Reader Service Card

Classifieds

Where Buyers Find Sellers

COMPUTER and Electronic components at reasonable prices. Send $2.00 for 1988 catalogues and be on mailing list for one year of 'Bargain Flyers." **M.O. ENTERPRISES,** Box 2066, Bramalea, Ontario, L6T. 3S3.

DESIGNERS ENGINEERS, hobbyists: Looking for that hard-to-find circuit? Try search on bibliographic data base. Thousands of practical circuits from dozens of journals. Many scientific applications. Ask for manual. **CIRCUIT SEARCH,** P.O. Box 268, Breslau, Ontario N0B 1M0.

CABLE TV DESCRAMBLING TECHNIQUES. 56 pages. $13.95. Channel 3 notch filter $39.95. Amazing see-in-the dark infra-red night viewer kit $295. SCA backround music kit $49.95. Catalogs $1. **OCTE(J),** Box 173, Montreal, H3X 3T4. 514-739-9328.

7" SONY Black & White T.V.'s Operating on 12 volts D.C., 1 yr. guarantee. $49.95 plus 7% sales tax. **R2 ELECTRONICS,** 100 County Court Blvd., #1104, Brampton ON L6W 3X1.

VENIN, SANYO, TANDY, others. Computers and accessories, HP Laser Jet Series 2 $2995. Phone (902) 368-3646 Fax (902) 368-3647 **THE COMPUTER STORE,** Box 1900, Charlottetown, PEI, C1A 7N5.

For Advertising Information Call
(416) 445-5600

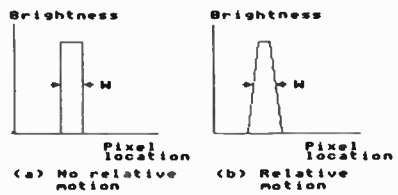

FIg. 7 The effect of relative motion between the camera and physical scene on the image reaching the computer stage

capability of the computer and controller functions in the system.

Image Capture

The second inherent difficulty in the application of the basic system of Fig. 6 is the image capture device at the front end. The use of faster scanning cameras for two-dimensional scene input is well established and works well when the physical image is at rest relative to the camera. Vidicon cameras are readily available, widely used and the more recent charge coupled device cameras are now gaining acceptance. All such systems however, depend upon a fundamental charge integration mechanism to register incident light intensity and usually some form of serial readout of this charge level will yield an analogue voltage related to the point sampled input light.

Fig. 7 illustrates the effect that relative motion between the camera and the physical scene has on the digital image reaching the computer stage.

The scenario is a bright rectangular object yielding an image with W pixel spacings, placed on a dark background viewed by a raster scanning camera system with a frame time of T seconds. When the object is stationary relative to the camera, the brightness profile at the computer stage is as indicated at Fig. 7(a). However, when there is a relative velocity less than W/T (expressed in pixel terms for convenience), the profile takes the trapezoidal form of Fig. 7(b). In the absence of a prior knowledge of the object velocity, subsequent image processing of the digital picture will lead to spurious results.

Educational Challenge

It is clear that the successful exploitation of the potential world market for image/vision based products will rest heavily in the hands of the engineering profession. The foregoing discussion identifies the technical challenges to be faced if this is to be achieved.

The underlying theoretical basis is highly mathematical and dictates that this aspect of the training of suitable engineers/technologists will be increasingly important. The unavoidable use of computing machinery of rapidly advancing complexity requires degree programs with correct blend of computer engineering and high-speed software engineering to prepare the graduate for the challenge of generating world class products. In addition advanced product development of this type demands advanced computer based production and management methods. This aspect dictates a properly structured approach to the inclusion of CAD/CAM/CIM methods in the degree programme.

In short there is now an immediate requirement for the training of highly market-aware graduates who are well-attuned to the manufacturing and industrial environment but also able to cope adequately with the technical rigors of information dependant products. Clearly, electronic imaging is a major, but only one, facet of a much wider information engineering horizon.

Conclusion

This article has explored briefly the current trends in the potential use of image processing in a wide range applications. It is clear that much research effort has been devoted to fundamental aspects of image processing methods but there is now an accelerated interest in application specific investigation.

Processing speed is identified as a key feature in potential realization of many possible applications and this is viewed as a major technical challenge if viable products are to be generated on a commercially competitive basis. Limitations in image capture systems for realtime applications such as remote sensing and measurement continue to impede the use of machine vision systems in industrial manufacturing. Solving these difficulties is now a significant growth area for research and development.

Dr. Virani is a freelance writer from Mississauga Ontario. ■

World Radio History

Train for the Fastest Growing Job Skill in North America

Only NRI teaches you to service all computers as you build your own fully IBM-compatible microcomputer

NEW! Train with the newest Sanyo 880 Series Computer – it's fully IBM-compatible and runs almost twice as fast as the IBM PC!

With computers firmly established in offices—and more and more new applications being developed for every facet of business—the demand for trained computer service technicians surges forward. The Department of Labor estimates that computer service jobs will actually *double* in the next ten years—a faster growth rate than for any other occupation.

Total systems training

No computer stands alone... it's part of a total system. And if you want to learn to service and repair computers, you have to understand computer *systems*. Only NRI includes a powerful computer system as part of your training, centered around the new, fully IBM-compatible Sanyo 880 Series computer.

As part of your training, you'll build this highly rated, 16-bit IBM-compatible computer system. You'll assemble Sanyo's "intelligent" keyboard, install the power supply and disk drive and interface the high-resolution monitor. The 880 Computer has two operating speeds: Standard IBM speed of 4.77 MHz and a remarkable turbo speed of 8 MHz. It's confidence-building, real-world experience that includes training in programming, circuit design and peripheral maintenance.

No experience necessary— NRI builds it in

Even if you've never had any previous training in electronics, you can succeed with NRI training. You'll start with the basics, then rapidly build on them to master such concepts as digital logic, microprocessor design, and computer memory. You'll build and test advanced electronic circuits using the exclusive NRI Discovery Lab®, professional digital multimeter, and logic probe. Like your computer, they're all yours to keep as part of your training. You even get some of the most popular software, including WordStar, CalcStar, GW Basic and MS DOS.

Your NRI total systems training includes all of this: NRI Discovery Lab® to design and modify circuits • Four-function digital multimeter with walk-you-through instruction on audio tape • Digital logic probe for visual examination of computer circuits • Sanyo 880 Series Computer with "intelligent" keyboard and 360K double-density, double-sided disk drive • High resolution monochrome monitor • 8K ROM, 256K RAM • Bundled software including GW BASIC, MS DOS, WordStar, CalcStar • Reference manuals, schematics and bite-sized lessons.

Send for 100-page free catalog

Send the post-paid reply card today for NRI's 100-page, full-color catalog, with all the facts about at-home computer training. Read detailed descriptions of each lesson, each experiment you perform. See each piece of hands-on equipment you'll work with and keep. And check out NRI training in other high-tech fields such as Robotics, Data Communications, TV/Audio/Video Servicing, and more.

If the card is missing, write to NRI at the address on the right.

NRI is the only technical school that trains you as you assemble a top-brand microcomputer. After building your own logic probe, you'll assemble the "intelligent" keyboard...

...then install the computer power supply, checking all the circuits and connections with NRI's Digital Multimeter. From there, you'll move on to install the disk drive and monitor.

NRI SCHOOLS
McGraw-Hill Continuing Education Center
330 Progress Avenue
Scarborough, Ontario M1P 2Z5
or telephone 416-293-8787

IBM is a Registered Trademark of International Business Machine Corporation.

Main Office: 3939 Wisconsin Avenue, Washington, D.C. 20016

World Radio History

Superconductor News

In the coming months we're going to be hearing a fair bit about superconductivity and its impact on the world of electronics. With this in mind we'd like to bring to your attention a Canadian company that's committed to extensive research in this field.

CS Technologies of Kanata, Ontario, is a recently formed organization committed to promoting high temperature superconductivity in the Canadian marketplace.

The prospects for this new class of superconductors, named "perovskites", is limitless. They range from extremely fast computers to new modes of transportation over magnetic rails. Other possible applications include electric motors, batteries, transmission lines and medical equipment.

It is the view of many experts that the race to commercialize superconductivity is a test - with the scientific and technological reputations of several nations at stake. Competition is particularly intense between the U.S. and Japan to deliver marketable applications. Clearly, Canada must follow or risk to lose enormously in the next decade.

CS Technologies is presently offering research grade superconducting perovskites with transition temperatures of 93 degrees Kelvin. Higher temperature materials (approx. 159 degrees Kelvin) will be made available in the near future. The refrigerant for these devices is inexpensive, readily available, liquid nitrogen.

Superconductivity demonstration kits are also available at a very reasonable cost. These kits include all the necessary components required to demonstrate the diamagnetic property of superconductors by levitating a small rare-earth magnet.

All devices are 100% tested before shipment and come with instructions; custom designs are available on request. Current prices for the kits are as follows: Superconducting ceramic disc and instructions - $30.00; Superconductor kit including disc, liquid nitrogen container, rare-earth magnet, wire loop, plastic tweezers, and instructions - $50.00. All taxes, shipping and handling are extra.

For more information on superconductivity and superconductor kits, contact: Marc Nadeau, CS Technologies, 21 Sumner Street, Kanata, Ontario K2K 1X4 or...

Circle No. 70 on Reader Service Card

The Information Technology Association of Canada has produced a 14 minute high quality video entitled "Making Connections".

The video highlights the scope of information technology use in Canada, challenging other Canadians to explore uses of the technology in their own field of endeavour. The video introduces ten interesting and thought-provoking case studies. As well, a brochure is available that highlights further examples.

Graeme Hughes, President of ITAC says the video was produced because of the "urgent need to educate Canadians on computer and telecommunications use in their own work. ITAC's mandate is to promote improvement in the well-being of Canadians through effective use of information technology."

The video was produced with assistance from the Department of Communications and the Ministry of State for Science and Technology. The cost starts at $20 depending on the format of tape required. It's available from ITAC at 211 Consumers Road, Suite 300, Willowdale, Ontario M2J 4G8 (416) 493-8710.

Note: The index of articles and projects which usually appears in our January issue, will appear in the upcoming March issue. Our apologies to those who have been on the lookout for it.

Videotape Computer Assembly

Wolfer Productions of California has released a new how-to videotape which takes the viewer step by step through the assembly of an IBM XT-compatible computer.

The tape shows each of the components before assembly, shows it being installed, and takes you in for a close-up view of the actual connection. Each step is explained as it occurs. Following the techniques used by the clone manufacturers themselves, the computer is assembled from start to finish with a floppy disk and a hard disk drive.

Included with the tape is a list of kit suppliers and a description of all the components. Wolfer claims a newcomer using the tape should be able to assemble a computer from a kit in less than two hours. No wiring or soldering is required and no special knowledge or skills are needed. All it takes is a screwdriver, thanks to modern circuit boards that snap together.

The tape is $39.00 from Wolfer Productions, Computer Video Department, 10153 1/2 Riverside Drive #153, Toluca Lake, CA 91602.

Circle No. 71 on Reader Service Card

COMPUTER PARTS GALORE

316 COLLEGE ST. TORONTO M5T 1S3

SALES,SERVICE 1-416-928-2161 FAX # 1-416-924-0292
TOLL FREE ORDERS 1-800-387-1385 BBS # 1-416-366-2069
ENVOY100 ID: CPG

CENTRONICS PAGEPRINTER 8

HP LASERJET II COMPATIBLE LASER PRINTER

only $1995.95

1.5 MEG MEMORY UPGRADE FOR FULL PAGE GRAPHIC SUPPORT, REQUIRED FOR LASERJET EMULATION only $299.95

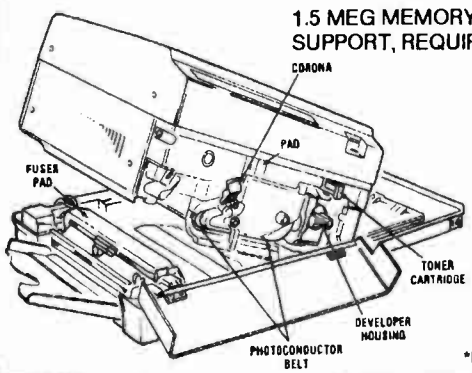

*8 Pages per Minute
*Diode Laser System
*Sharp Laser Engine
*Separate Consumables for Economic Operation
*Parallel Interface
*8 1/2x11 and 8 1/2x14 paper size
*Uses Standard Paper
*Public Domain Software Fonts Included
*Supports Full Page Graphics with Memory Upgrade
*One Year Warranty

*IBM,XT and AT are Trademarks of IBM Corperation

DRIVES and CONTROLLERS

PANASONIC JU455 DSDD 360K	$149.95
JU364 3.5' Drive with Mounting Kit	$169.95
PANASONIC JU475 1.2M AT Drive	$199.95
XT 20 Meg Hdisk w/controller	$459.95
XT 30 Meg Hdisk RLL Controller	$519.95
AT 42M 38ms 1/2 hgt Seagate ST-251	$774.95
AT 44Meg 28ms Full hgt Miniscribe 6053	$1099.95
AT 72M 28ms Full hgt Micropolis 1335	$1250.00
AT 16 Bit WD Hard/Floppy Controller	$289.95
AT 16 Bit WD Hard/Floppy RLL Controller	$375.00

MONITORS

Packard Bell Hi-Res TTL Amber	$149.95
Packard Bell Hi-Res TTL Green	$149.95
AMDEK 410 Hi-Res TTL Amber	$265.95
Thompson 14" RGB Monitor	$499.95
NEC MULTI_SYNCH 14"	$924.95

GOLSTAR EGA 13" Monitor Dual-Scan 15.7-22 Mhz
Monitor only $624.95
w/EGA Card $799.95

AT286 PREMIUM SYSTEM

BAISC PREMIUM SYSTEM INCLUDES:
MACH 12 12Mhz 286 MOTHERBOARD w/Manual
ZYMOS POACH VLSI CHIPSET
MB DESIGNED and PRODUCED in the U.S.A.
640K (120ns) DRAM
AWARD BIOS w/SETUP/SPEED SWITCH IN ROM
FULL SIZE AT FLIP TOP CASE
CGA or MGA VIDEO ADAPTER
200W POWER SUPPLY
PARALLEL and SERIAL PORTS
5060 "TACTILE" KEYBOARD
16 BIT HARD/FLOPPY DRIVE CNTRL
1.2MEG and 360K FLOPPY DRIVES
1 YEAR PARTS/LABOR WARRANTY
6 DISK SET OF SYSTEMWARE SOFTWARE

all for only $1899.95

BABY AT BOARDS - UPGRADE PC or XT SYSTEM

BABY AT+ - 6/10 or 6/12 Mhz. Uses new CHIPS & TECH six chip chipset. Fits in XT case. Runs all XT peripheral cards. ZeroKram, ClkCal. **ONLY $699.95**
PREMIUM AT SYSTEM Above with BABY AT + Motherboard
ONLY$1799.95

XT* SYSTEMS

Latest clone technology. 100% compatble. Legal BIOS. Fully tested and Burned-in. BASIC SYSTEMS INCLUDE:
-640K Ram on 8 slot Motherboard
-2 DSDD 360K floppy and controller
-AT/XT 5160 Tactile keyboard
-Mono/graphic Video Adapter -Hi-Res TTL Monitor
-Clock / Cal, Serial, Parallel, Game Ports
-8 Slot Flip-Top case w/180W Power Supply
-6 free disks of public domain Systemware

Motherboard options.

(1) 4.77 Mhz Std.	**$1075.95**
(2) 8 / 4.77 Mhz 2 Layer Pcb	**$1099.95**
(3) 8 / 4.77 Mhz 4 Layer Pcb	**$1175.95**
(4) 10 / 4.77 Mhz 4 Layer Pcb	**$1195.95**
(5) BABY AT 6 / 10 Mhz	**$1699.95**

ADD TO BASIC SYSTEM PRICE

-20 Meg Hdisk with Controller	$439.95
-30 Meg RLL Hdisk w/ Controller	$519.95
-Upgrade to EGA Card w/256k	$140.00
-Upgrade to EGA monitor	$460.00
-8087 5Mhz	$199.95
-8087 8Mhz	$299.95

World Radio History

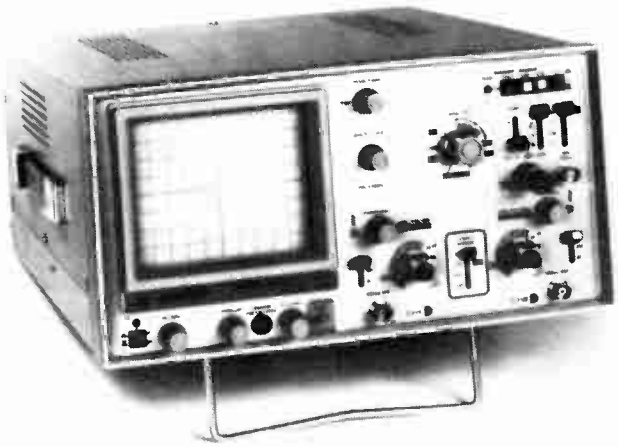

Dual Trace Scope

The Model 1541A 40 MHz dual trace scope from B&K- Precision features 1 mV/div sensitivity, 20 calibrated sweeps, video sync separators and a 6 kV accelerating voltage.

In addition, the unit also features Z axis input, X10 magnification, single sweep, sum and difference capability, and channel 1 output.

If you would like more information on this B&K- Precision scope contact: Jo-Anne Enzel, Atlas Electronics Ltd., 50 Wingold Avenue, Toronto, Ontario M6B 1P7. Tel: (416) 789-7761

Circle No. 54 on Reader Service Card

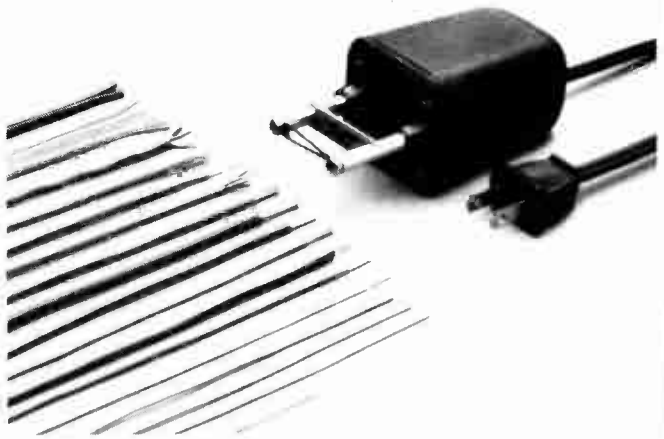

Thermal Wire Stripper

The model PTS-10 wire stripper is a small, lightweight, low power, line-operated tool which incorporates a uniquely shaped nichrome heating element which heats up quickly (less than 5 seconds) to an optimal temperature of 450 degrees fahrenheit.

The unit efficiently strips thermoplastic insulation from solid, stranded, or shielded wires from #14 to #30AWG, and will not burn skin if accidentally touched due to its low power and minimal mass. The smooth design heating element eliminates nicks and broken strands of conductors, and reduces lead pull on sensitive components. It operates on 120 VAC, 60 Hz, with a power consumption of 2.9 watts.

For more information on the PTS-10 contact: J. Lovat, ECG Canada Electronic Components, 1928 St. Regis Blvd., Dorval, Quebec H9P 1H6. Tel: (514) 685-5800 or Fax: (514) 685-5804.

Circle No. 55 on Reader Service Card

Digital Wattmeter

Measure up to 6000 watts of true power with the Model 5000 Digital Wattmeter from Brunelle Instruments. A member of the Brunelle Commander series, the 5000 is also capable of measuring AC and DC volts as well as AC and DC current.

The lightweight, handheld, sports a 3 1/2 digit LCD display, and incorporates LSI circuitry for high reliability and durability.

For more information on the 5000 and other products in the Brunelle Commander line contact: Richard Robinson, Brunelle Instruments Inc., 73-6th Range South, St. Elie D'Orford, Quebec J0B 2S0. Tel: (819) 563-9096.

Circle No. 56 on Reader Service Card

Mini Advent Loudspeaker

The Mini Advent won't take up much room on your shelves with its 11" high x 6.5" wide x 5 1/8" deep cabinet but don't let its small size fool you. The Mini produces clear and deep sound rivalling that found in much larger systems.

Utilizing a tuned port enclosure design and a 5 1/4" woofer, the Mini Advent provides deep full bass, while the 1/2" Polycarbonate dome tweeter produces wide dispersion and superior imaging. The Mini is rated to handle 40 watts of continuous power and 120 watts peak, and the frequency response is 110 Hz to 21 KHz ± 3 dB. Its rated sensitivity is 88 dB at 1 watt/1 meter, while its harmonic distortion is said to be less than 1.5% above 200 Hz at 1 watt.

The Mini Advent carries a suggested retail price of $199.95 (US) per pair and will be available this month from Advent dealers.

Contact: Donna Austi, HWH Enterprises Inc., 16 East 52nd Street, New York, NY 10022. Tel: (212) 355-5049.

Circle No. 57 on Reader Service Card

World Radio History

Monochrome Graphics Board

In addition to being totally compatible with the IBM monochrome display adapter and the Hercules card, the Mono-Master offers input/output features and a clock/calendar maximizing your PC's expansion slot capabilities.

This card is a high performance, high resolution graphics board which will provide your IBM PC, XT, or AT and compatibles with a 25-pin serial port and a 25-pin parallel port for connection to any IBM or compatible communication device. An optional game port for recreational software is available. Price $199US.

For more information contact: Silvia Fagiani, Boca Research Inc., 6401 Congress Ave., Boca Raton, Florida 33487. Tel: (305) 997-6227.

Circle No. 69 on Reader Service Card

RF Coaxial Switch

These 26.5 GHz SPDT coaxial switches from Wavecom range in size from 1.17" to 2.26" and offer superb RF performance. Insertion loss (max) ranges from 0.2 to 0.6 dB (DC to 26.5 GHz); isolation from 80 to 50 dB; and VSWR from 1.2:1 to 1.6:1. Operating reliability is guaranteed by the manufacturer to 1M cycles per position, with no intermittent contacts in RF or indicator circuitry, less than 0.1 dB increase to insertion loss, and less than 0.3 ohm increase to indicator circuit resistance.

For more information on these switches contact: Nancy Renfrow, Wavecom Division of Loral Corporation, 9036 Winnetka Ave., Northridge, CA 91324. Tel: (818) 882-3010.

Circle No. 63 on Reader Service Card

Digital Torque Screwdrivers

Available in Canada, these British-made digital torque screwdrivers are offered in two configurations: one for torques up to 1 N-m and the other for torques up to 3 N-m. Each has a standard 1/4" (6mm) female hexagon drive, and is available in three versions to provide compatibility with the manufacturers established range of torque-measuring equipment, as well as equipment from other sources.

The 'DTS' version is fully self-contained with the screwdriver, display unit, and bits housed in a diecast box complete with carrying case. To extend the torque range, small wrench-mounted torque transducers are available as an option for plugging into the display unit in place of the screwdriver, and offer capacities of 5 N-m (44.3 lb-ft) and 10 N-m (88.5 lb-ft).

The second version is intended primarily for use with the manufacturers 'UTA' equipment range, which offers such facilities as computer output and printout of measurement. And last but not least, the 'industry standard' version incorporates a full strain-gauge having 350 ohm resistance and 2mV/V sensitivity. It is also suitable for direct connection to many types of data-collection and readout units.

For more information contact: Tom Bates, Wesco Production Imports Ltd., 4373 Dawson Street, Burnaby, B.C. V5C 4B5. Tel: (604) 298-2933.

Circle No. 62 on Reader Service Card

World Radio History

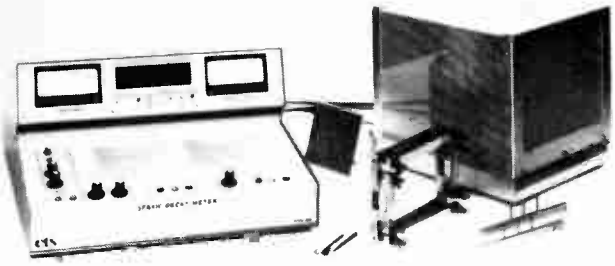

Static Decay Meter

The Model 406C from Electro-tech Systems is a complete system for measuring the electrostatic dissipation performance of materials in accordance with federal and industry standard test methods.

The unit is used in both development and quality control applications to test all materials used in static sensitive applications such as electronic component packaging, clean rooms, hospitals and hazardous locations. The system is applicable to testing any material where static electricity can effect its manufacture, handling, performance or appearance.

The instrument comes complete with custom electrodes, test cage; test adaptors can be designed for specialized applications.

For more information contact: Brian Hohman, Electro- tech Systems Inc., 115 E. Glenside Ave., Glenside, PA 19038. Tel: (215) 887-2196.

Circle No. 67 on Reader Service Card

Transducer Interface

A digital transducer interface from DJ Instruments can be modified to perform weight, pressure, torque, and horsepower measurements. Providing a variety of functions such as 20 mA current loop and digital outputs for computer/controller interfaces, it digitally linearizes input functions from a transducer and features resolution to 10,000 counts.

The unit is built to OEM specs including setpoints, analog and BCD outputs and other functions. It also features a 5 1/2 digit, 1/2" LCD display, digital calibration, pushbutton zero, auto zero tracking, operates on 115 VAC or external 12 VDC. An internal 12 hour battery backup and 5-position thumbwheel tare option are also available.

Contact David First, DJ Instruments Inc., 18 Republic Rd., North Billerica, MA 01862. Tel: (617) 667-5301.

Circle No. 68 on Reader Service Card.

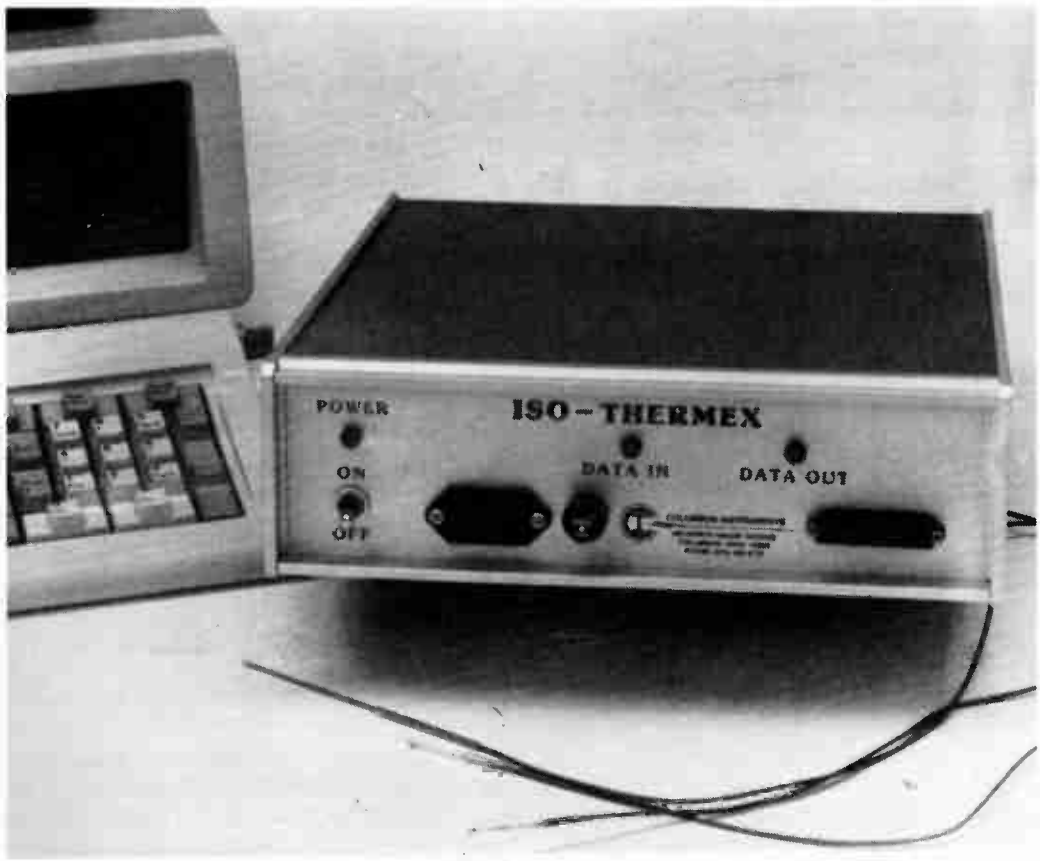

Thermocouple Interface

The new Iso-Thermex thermocouple to computer interface features 16 thermocouple (J and K) inputs with cold junction compensation. Input stages are optically isolated from the computer providing increased safety in medical applications as well as higher immunity to electrical interference.

Communication with the computer is via bi-directional RS-232 link and scanning frequency can be as short as 1 second per channel. Temperature logging and thermocouple linearization software is available for the Apple][e and IBM PC computers including graphics of temp vs. time. Temperature resolution can be as high as 0.017 degrees C and the software allows periodic data printing and disk storage. It can also be controlled by any other computer featuring an RS-232 port.

Standard range of the Iso-Thermex is ±50°C with other ranges available on request. Price: $2990US incl. software. For more information contact: Jan Czekajewski, Columbus Instruments, 950 North Hague Ave., P.O. Box 44049, Columbus, OH 43209-0049. Tel: (614) 488-6176

Circle No. 66 on Reader Service Card

Continued on page 43

World Radio History

The Amiga 500

Step into 32-bit computing, windowing and super graphics at an affordable price.

By Bill Markwick

One of the most popular microcomputers in the late 70s and early 80s was the Z80 type; it used 8 bits, or one byte, as its basic unit of information, and could directly address 64K of memory. The operating system was usually CP/M, a fairly limited but fast way of file handling; CP/M did not support graphics without a lot of modification by the computer manufacturer. Once IBM introduced its PC series, the 80-type processor gave way to the 8088 and 80286, 16-bit units that handled two bytes at a time for higher speed, using the MS-DOS operating system.

It was inevitable that people would want faster, more flexible computers: the available software grew in complexity as designers made full use of the available hardware (remember when the MS-DOS memory limit of 640K was thought to be more RAM than anyone would ever need?). In addition, many people found the A: prompt syntax difficult to learn and remember.

It wasn't long before microcomputer designers borrowed from mainframe technology and introduced the 32-bit machine, with the most popular models using Motorola's 68000-series of chips. The added speed and memory flexibility meant the possibility of graphics far beyond the PC's limitations, and this in turn meant the possibility of windowing; instead of typing long strings of abbreviations, users could now use a mouse to point at symbols on the screen and open various windows with more symbols to permit several functions at once.

The Amiga 500

The Amiga from Commodore Business Machines is one of the frontrunners in 32-bit computing, and the 500 is a much slimmer package than the original box-plus-keyboard, which looked somewhat like a PC in shape. The 500 consists of just about everything in one wedge-shaped unit: a keyboard, the motherboard, one 3 1/2" microfloppy disk drive and various connectors on the rear. One reason the package is so small is that the power supply (and on/off switch) resides in a separate box that you can put on the desk or floor.

The rear connectors consist of two mouse/joystick ports, left and right audio phono jacks, a connector for another disk drive, a parallel output, a serial output, an RGB video output and a phono jack with a monochrome output.

Specifications

The CPU is a 68000 running at 7.2MHz and memory is 512K, expandable to one megabyte with the optional A501 expansion card. The serial port is a standard RS232 and the parallel is a Centronics compatible type. The disk drive uses double-sided double-density microfloppies with 880K bytes per disk. The mouse has a resolution of 200 counts per inch.

Three custom chips provide very fast manipulation of graphics and audio and also control movement of data to and from the display, disks and serial port. This results in the Amiga's remarkably fast handling of complex graphics. There are 4096 available; there are four resolutions available, from 320 x 200 to 640 x 400. Areas of different resolution can appear on the screen at the same time.

We tested the 500 with the Commodore 2002 RGB color monitor and the Commodore Model 1010 second disk drive.

Options

Options include the A501 memory expansion with another 512K (and a real-time clock) which fits into a compartment on the bottom. A second 3 1/2" disk drive is simply plugged into the

World Radio History

The quality of the Amiga's 4096-color palette and high resolution has to be seen to be appreciated; this illustration is from a series of Impressionist paintings done with DeluxePaint.

rear connector; a 5 1/4" disk drive is also available. Most popular printers are supported, such as the Commodore MPS 1000 or 1250, Epson FX-80, laser printers, etc. The Amiga 1680 Modem plugs into the serial port and uses the popular Hayes™ protocol. The Midi Interface gives the computer the ability to control musical instruments and to digitize sound. There are more options available at Commodore dealers all the time, plus third-party hardware and software.

Monitors can be RGB, which takes best advantage of the Amiga graphics capability, composite monitors, and with an optional modulator you can use a TV set (never highly recommended because the average TV lacks the bandwidth for sharp definition). The composite output, by the way, is monochrome only.

Setup

Setup is about as easy as you can get: just plug in the power supply, mouse, RGB cable and any optional equipment. If your monitor has an audio input, you'll need a Y-cord with phono plugs in order to mix the right and left audio into the monitor jack. Or, you can just use regular cords to hook into the auxiliary input of your stereo system and you'll have stereo from your computer.

I do have one complaint on setting up: the various cables, while sturdy, are very thick and inflexible and make quite a tangle on the desk. Moving things around will make connectors pop out unless you've tightened all the clamping devices securely.

Booting

Two disks come with the 500, the Workbench system disk and the Extras disk, which holds utilities, Basic, etc. When you switch on the power, the motherboard is first brought to life by an internal ROM which contains the Kickstart basic booting instructions. Put in the Workbench disk and the operating system immediately begins to load; this is a nice feature of the microfloppy drives – they can tell when disks have been changed and automatically read the directory.

The system loads in about 50 seconds. This is not very fast compared to MS-DOS loading, but this shouldn't imply anything about the operating speed; it's because the Workbench system is very large and contains so many features. Some of these features are a word processor, a clock and a calculator, for instance.

When the blue screen appears, you'll see a miniature microfloppy symbol. Click the mouse arrow on this and a window will open, containing Demos, Utilities, directory information, a clock and more. Click on Utilities, for instance, and another window appears with the symbols for the Notepad word processor and the Calculator. These windows can be shifted anywhere on the screen, changed in size, and even put behind other windows. Put the arrow on the white band at the top and click the right mouse button; pulldown menus let you do all the usual disk handling, such as formatting, copying, etc.

If you have the A501 memory expansion, you'll see a symbol for a RAMdisk. This is automatically created and changes size to suit the contents. All you have to do to load it is click on the symbol that you want loaded and mouse it over onto the RAMdisk symbol. If the software uses frequent disk accesses, this will speed it up considerably. If you don't have

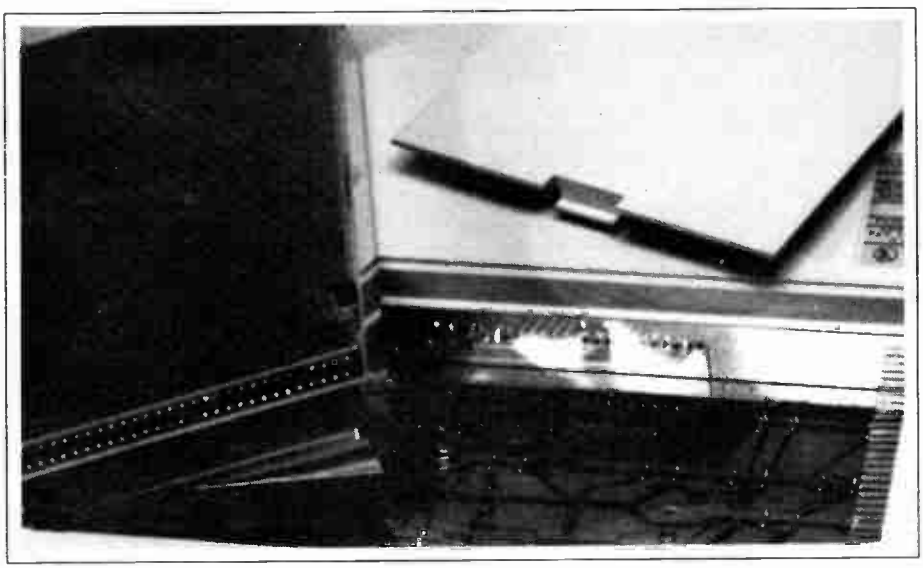

The A501 expansion card is easily inserted into the expansion socket on the bottom, and adds 512K and a real-time clock. The extra 512K is particularly useful for making a large RAMdisk to eliminate frequent disk accesses.

World Radio History

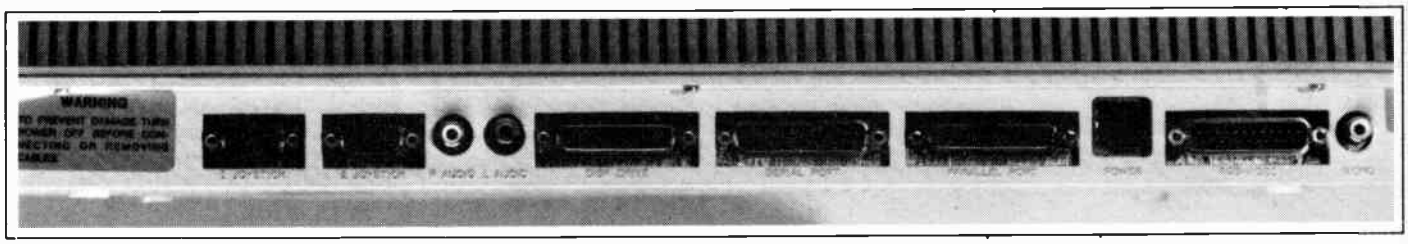

The rear panel and connectors of the 500.

the expansion card, you can still make a RAM disk using another utility.

Put in the Extras disk; this one is just packed with demonstrations and utilities. Try the Speech demo; a window appears and a voice tells you to "Type what you want me to say". Type anything; the speech synthesizer does a remarkable job of reading text and converting it to speech. Color bars in the window can be adjusted with the mouse to control such parameters as Pitch, Inflection, Voice, Tune, etc. The voice is always identifiable as computer-generated, but it's extremely flexible and very smart – if you type an unpronounceable QZX%^&@, for instance, it simply reads off the individual characters.

Icons vs DOS

Those who cut their computer teeth on CP/M or MS-DOS sometimes take a dim view of the windowing system and its little symbols, or icons. The windowing system lacks certain information; for instance, if you put a program into either of two drives, the icon simply appears on the Workbench screen. There's nothing about location or file size. Directory searches ("drawers") are particularly cumbersome if you're used to DOS.

On the other hand, you're not snowed under with numbers, and file manipulation couldn't be much simpler. Windowing is the wave of the future; most computer users are not serious programmers – they just want a convenient way to run software, and windows do just that ("The A: prompt is dead" is attributed to someone working on the new OS2 operating system at Microsoft).

So can you have the best of both? You can with the Workbench system. There's a utility called CLI (Command Line Interface) which opens a text window that looks just like DOS, and even uses much the same commands (DIR, TYPE, DISKCOPY, FORMAT, MAKEDIR, etc.). Instead of A: and B:, the drives become DF0: and DF1:. If you feel you aren't getting enough information from your icons, there you are.

Flight Simulator

The Microsoft/SubLogic Flight Simulator has long been used as a compatibility test for MS-DOS computers because it loads its own special operating system. The 68000 version for the Amiga raises the simulator to new heights, and demonstrates the power of the Amiga's graphics handling and windowing. Instead of the gloomy winter-afternoon look of the MS-DOS version, the cockpit and windshield come to life in bursts of colour, with very fine detail. The scenery has a much faster update rate and has much finer detail. Pulldown menus give you a choice of a Cessna, a LearJet or a WWI fighter.

The windowing is amazing: you can open a Map window and zoom it in and out, and then open a Spotter Plane window so that you can see your own airplane from the outside. The windows can be any size or location so that you can still see out the normal windshield. The instrument panel can be pulled down if you want more windshield area.

If that isn't enough, hook two Amigas together with RS232 cables and select the multi-player mode. In this mode each pilot can see the others aircraft on the screen. You can do formation flying all over the place, and use the Track window if you lose sight of each other. Now this is *graphics*.

One limitation is that the simulator uses low-res in order to conserve memory and increase speed; as a result the landscape looks very coarse when the aircraft is at a low altitude. There is also no shading of buildings and so on; all this may be improved in the next generation of software.

Incidentally, the planes can't collide; they just pass through each other.

Art

There are a number of programs around which display fine art, posters, etc., and really show the Amiga's color palette and high resolution. The Impressionist Paintings, using DeluxePaint Slideshow, is probably the best demonstration of sophisticated graphics. It's like looking at a closeup of a fine art painting being shown on a high-quality TV set.

If you liked paintbox programs such as DrHalo on MS-DOS systems, wait until you try something like DeluxePaint or Aegis Images on the Amiga. The flexibility of the 4096-color palette and the high resolution is light years beyond previous systems.

The Aegis VideoScape 3D™ software lets you draw an object as you would with a paintbox program and then view it from any angle, and even animate it. High quality computer color animation like this used to require a mainframe a few years ago.

BASIC

The BASIC that comes with the Extras disk is somewhat different from the one you may be used to. There are no line numbers, for instance, but labels for functional blocks. LISTing a program causes it to appear in a separate window. Amiga BASIC supports the mouse and user-written pulldown menus, sound, speech synthesis, and comprehensive graphics.

In Short

In short, if you're looking for the most power at the lowest price, the Amiga provides a comprehensive, flexible system at about the same price as a basic MS-DOS computer (prices change rapidly, but at the time of writing you could get a complete 500 system for well under $2000). If you prefer icons and mousing instead of typing, the Amiga operating system is about as comprehensive as you can get in this price range. ■

World Radio History

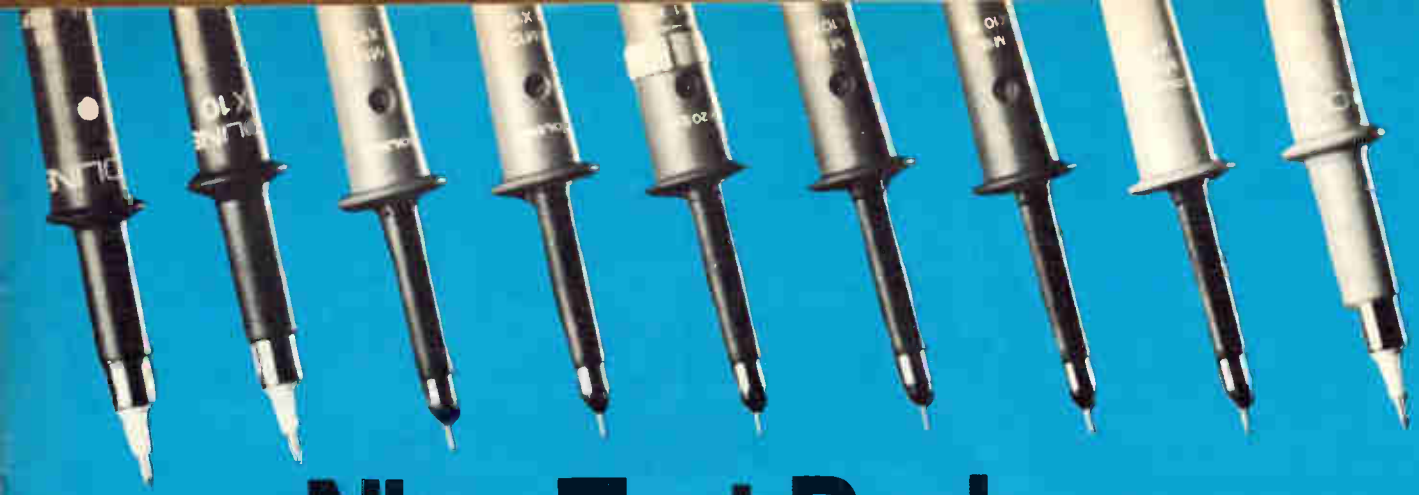

Nine Test Probes with only one difference between them and your scope's original equipment

Manufacturers Scope	Original Probe	U.S. $ Price	COLINE Equivalent	CDN Price
TEKTRONIX				
2300 Series	P6101A	$53	M12X1	$ 52.90
	P6108A	$75	M12X10	$ 63.30
2200 Series	P6121	$100	M12X10AP	$ 81.30
	P6122	$58	P100	$ 41.70
2400 Series	P6131	$140	M15X10HFAP	$122.00
	P6133	$115	M12X10AP	$ 81.30
400 Series	P6105A	$93	M12X10AP	$ 81.30
	P6106A	$140	M15X10HFAP	$122.00
	P6130	$130	M12X10AP	$ 81.30
IWATSU				
SS-5321	SS-0014	$92	M12X10	$ 63.30
SS-5711	SS-0012	$77	M12X10	$ 63.30
LEADER				
LBO-315	LP-060X	$60	SP100	$ 53.10
LBO-518	LP-100X	$76	SP100	$ 53.10

Manufacturers Scope	Original Probe	U.S. $ Price	Coline Equivalent	CDN Price
PHILIPS				
PM3267	PM8294	$60	M12X1	$ 52.90
&				
PM3256	PM8926	$70	P100	$ 41.70
PM3264	PM8928	$95	M12X10	$ 63.30
HITACHI				
V-1100A, V-670, V-509	AT-10AL1.5	$64	SP100	$ 53.10
HEWLETT PACKARD				
1715A	10018A	$135	M20X10	$ 72.30
1722B	10017A	$130	M15X10HF	$103.90
1725A	10017A	$130	M15X10HF	$103.90
1740 Series	10041A	$135	P100	$ 41.70
	10021A	$85	IP20	$ 36.80

Take up the Coline challenge and compare our prices with the probes you currently use. In many cases you can replace both probes on your dual trace scope at the cost of one probe from the scope manufacturer. Plus, bandwidth and overall performance of the probe typically exceed that of the original equipment. Satisfaction is guaranteed with a ten day return privilege. Coline - Specialists in probes for over 15 years.

IN CANADA Coline Ltd PROBES & ACCESSORIES

distributed from your Canadian stocking source

BCS ELECTRONICS LIMITED

980 Alness St Unit 7
Downsview, Ontario
M3J 2S2
(416) 661-5585
TELEX 065-28169

Circle No. 22 on Reader Service Card

World Radio History

The Physics of Music, Part 4

Putting acoustical theory into practice with a Sound Level Meter.

By Bill Markwick

In our previous articles on the physics of music, we covered sound pressure levels, sound intensity, loudness and other characteristics. This month, we look at making some practical measurements of sound using a calibrated meter. The results obtained should clarify some of the more confusing units that keep turning up in acoustics.

As mentioned before, sound pressures are measured by referring all readings to a starting point: the threshold of hearing, defined as 0.0002 microbars. Because the range of pressure from the threshold of hearing to the threshold of feeling is an enormous one, it's compressed into a more convenient form by using the decibel. The threshold of hearing becomes 0dB and sounds are compared to this by using the formula:

SPL = 20log(Pressure Ratio)

This decibel scale gives us a convenient means for measuring sound levels. Some typical values would be:

Quiet Recording Studio – 20dB
Average Residence – 45dB
Conversation – 65dB
Loud Orchestra – 90dB
Threshold of Feeling – 120dB
Loud Rock Music – 110
Jet at Takeoff – 130dB

These figures are approximate and vary quite a bit with the type of source, the distance, the measurement environment and so on, but they give a good idea of the range of numbers commonly used.

The Sound Level Meter

The SLM is a useful instrument for obtaining the above readings and for analyzing the sounds around us. Musical sounds, the acoustical environment and our subjective reactions combine to make the basics of sound appear to be far more complicated than they actually are. If we can make some proper measurements and obtain some valid numbers, it's much easier to break down a complex sound into simple parts. Mind you, I'm not saying that the study of sound can't get incredibly difficult, only that the basics are easier to grasp than people think.

The meter we used for the tests is the Realistic Sound Level Meter, avail-

World Radio History

A sharp way to empty an office in nothing flat. Besides the convenience, the tripod is used to prevent sound from reflecting from someone holding it.

able from Radio Shack, catalog number 33-2050. It can measure from 50dB to 126dB and has a frequency response of 32Hz to 10kHz using the flat response switch setting. This is more than adequate performance for general acoustical work, and at $36.95 it's quite a deal in test equipment.

The circuitry is straightforward. An electret condenser microphone feeds a single-transistor amplifier which is followed by a resistive attenuator switchable in 10dB steps. An IC drives the meter movement; two filters are provided, one for the response and one for the weighting.

The response filter is a large capacitor that's switched across the meter. This changes the meter characteristic from peak- reading to an average-reading type; the fast setting will react to sudden transients while the slow setting is better for measuring the average changes in ambient sound level.

The weighting filter has two settings, A and C. The frequency response of the C setting is flat (within the limits of the microphone); there is no emphasis or de-emphasis of any particular frequency. The A weighting switches in a filter that cuts the low frequencies starting at 500Hz; there is also a slight boost to the higher frequencies starting at 2kHz. The reason for this is to tailor the meter's response to approximate that of the human ear; as we pointed out in past issues, the ear is not as sensitive in the bass regions as it is in the midranges.

We also pointed out that the ear's frequency response changes with loudness: lots of bass and treble is required at low listening levels. For this reason some sound level meters have another filter, the B type, switched in for sound levels above 60dB or so. However, the A weighting is what everybody uses for approximating the ear's response under most condtions and it's all that you'll need.

On the side of the meter is a phono jack output for connecting to oscilloscopes, recorders, etc., and on the bottom is a standard tripod socket. Tripod mounting is recommended for best accuracy, since holding the meter may cause errors from sound reflected from the body.

Level Checks

The first thing we did was check the ambient noise in the office early one quiet morning. With the C rating, it tended to be about 55dB and very jittery. The oscilloscope revealed that the jitters were from people in other parts of the office rustling bits of paper, dropping pencils on desks, etc. Those are the sorts of sounds you automatically tune out once they become familiar, and it's a strange feeling to have the meter reveal them for you once again.

As more people came in and more conversations (and machines) were started up, the level gradually rose, requiring a 10dB move upward in the sensitivity setting, which eliminated the now- buried jitters.

The next check was to measure some musical instruments in a quiet room. I used the C weighting amd mounted the meter on a tripod one metre away (the usual distance for level checks).

Trumpet

The trumpet is as loud as you'd expect: its lowest note (C) measured 90dB with no straining at all. As any trumpet player could predict, the level went up as I went up the scale. The next G, which is the next step in the natural harmonic series, registered 100dB and the octave C 105db. Then the level began to fall off with the higher notes, partly due to my poorly trained lip and partly due to the trumpet's inherent limitations in the treble end of things.

A cup mute reduced the above readings by 5dB, though to the ear it sounded like much more, perhaps because the high frequencies are attenuated more, like turning down the treble control.

In a future issue, we'll be examining the physics of resonant tubes using the trumpet as an example, and we can look more closely at some of the above effects.

Electronic Keyboard

The small portable keyboard had the advantage of reasonably pure, sustained tones and a convenient size for making measurements around the room. I adjusted the volume for a level of 85dB at one metre and proceeded to play up and down the scales as I moved to various places in the room.

The results will come as no surprise to anyone familiar with pure-tone level checks. The geometry of the room will reflect certain notes beautifully if you happen to be at the proper angle (and playing that note); if the echoes reinforce each other, a peak in the response called a *standing wave peak* will happen. As a result, some notes in some locations were actually higher on the meter as you got farther away. Some notes that sounded identically loud to the ear produced widely different readings due to cancellations as echoes meet out of phase; the physical point of cancellation is called a *node.*

World Radio History

The output of the meter is fed into a scope; at the moment it's reading the whirring of the camera shutter.

Acoustic Guitar

The guitar's loudest notes tended to be the low E and A strings, with 80 to 83dB at one metre. Plucked together, they summed to 84 or 85dB; it's a bit hard to tell with transients like guitar notes. The level fell off somewhat as I went up the scale, presumably because the guitar top and braces were made to resonate freely in the E-A region. This doesn't mean that the guitar is bass-heavy. It actually sounds nicely balanced, pointing out the ear's relative insensitivity to low frequencies.

Tin Whistle

The tin whistle, or pennywhistle, is not made of tin and costs a whole lot of pennies, but manages a shriek of 100dB in its second octave. The weaker, higher notes only fell off by 4 or 5dB. Proof positive that they're not the sort of thing to start practising on at 3AM.

The relatively pure tones from the whistle created lovely standing waves as I walked around creating confusing readings all over the place.

Banjo

No surprises here. The plunky twang registered 80 to 85 with finger-style playing, 90 on loud chording. The standing waves weren't that much of a problem as I walked around; the sudden short notes weren't around long enough to create noticeable peaks or nodes.

Violin

Readings of 90dB weren't difficult to produce on any string. Only the very highest notes fell off, though I suspect a better player could have coaxed a louder, purer tone on the top strings right up to 90dB and more.

The biggest surprise was to place the meter's microphone where the player's left ear would be, very close to the belly and bridge of instrument. With this setup, readings of 105-110dB were common with C weighting, and 105 was routine with A weighting. Yet 90dB is the level at which you're warned about excessive exposure by the industrial safety people ("prolonged exposure may result in hearing damage...").

Even if you allow for the fact that musicians don't play constantly for eight hours a day, 105dB is a pretty loud sound to put in your ear. Violinists don't all seem to be deaf on the left, though maybe they are and they've been hiding it. Could it be that the *type* of sound is important when it comes to damage? I imagine that percussive sounds would be more damaging than violin tones. A rock concert, for instance, will make your ears ring, while a symphony orchestra won't, no matter how long the fortissimos last.

Reed Organ

This one was unusual. I have a 19th century foot-pumped reed organ in the living room, and when I measured its output (only 80dB – it was meant for polite young ladies who were entertaining the vicar), I found it varied by only plus-or-minus 2dB as I went up and down the scale, performance that would turn a high-end speaker manufacturer green with envy. Usually the room acoustics skew the response far more than that, and I'm not sure of the explanation, other than lucky placement and the richness of the reed tone (the rich odd harmonics don't excite standing waves the same way as pure tones).

Room Acoustics

The manual that comes with the meter has a section on adjusting the response of a sound system to compensate for room acoustics. The preferred method is to play a test record or tape that "should produce pure tones, one at a time, at intervals spanning the audio spectrum". An adjustable oscillator can substitute for a test record. A frequency equalizer will be much more versatile for this than the usual bass and treble controls. Also, furniture can be moved around, within limits, of course. Spouses do not take kindly to finding the window drapes hanging across the fireplace because it sounds better.

There's a caution here. When I worked in recording studios, it wasn't unusual to see a technician with sound level meter in hand, following the instructions given above. However, the results were often worse than before because of the standing wave peaks and nodes. A room is a very complex resonator; moving the meter six inches during a pure tone can change the measurement by 10dB or more. The room is just *full* of humps and dips, and "chasing the needle" is only going to muddle things up.

The usual way around the standing wave problem in professional applications is to use white noise (or *pink noise*, which has a flatter amplitude when displayed on a chart recorder because it's attenuated with rising frequency). The advantage of noise is that it's made up of all frequencies, preventing the excitation of standing waves. The disadvantage is that you need a sophisticated spectrum analyzer in order to see what's happening in specific frequency bands. The analyzer does this by using filter "windows", usually 1/3 octave wide; there are usually lots and lots of these windows showing the entire audio spectrum on a video display. A bit of overkill if you're only setting up a hifi system.

The simplest method is simply to stay aware of the tricks that room acoustics will play on you when you use pure tones. Don't start adjusting things just because you see a peak or dip; move around and take lots of readings first. If you're using an adjustable oscillator, slowly sweep it back and forth in frequency around the spot that's causing a suspect reading.

And, of course, when it comes down to it, your ear should rule. The equalizer may keep the meter happy at a particular spot while the rest of the room sounds wrong. Experimenting is the key. ■

World Radio History

Next Month in

Electronics & Technology Today

Canada's Magazine for High-tech Discovery

For advertising or subscriptions please call (416) 445-5600

Learn about Microprocessors!
Our new monthly course in microprocessors takes you from simple logic gates to the operation of the CPU and its support chips. Find out the how-to of the devices that are turning up everywhere.

Build the Hyper-Fuzz!
Not just your average fuzzbox, this unit features lots of harmonic production for a richer sound, plus the usual clipping distortion setting.

Dissecting the Sine Wave!
A clear demonstration of vectors and how they represent sine waves.

Using Computers in Math!
Delayed from last month, we present some programs in BASIC that show you how to promote your computer from a glorified calculator to a truly useful math tool.

THE NEW 65/9028 VT ANSI VIDEO TERMINAL BOARD!

★ FROM LINGER ENTERPRISES ★

A second generation, low cost, high performance, mini sized, single board for making your own RS232 Video Terminal. This highly versatile board can be used as a stand alone video terminal, or without a keyboard, as a video console. VT100, VT52 Compatible.

MICRO SIZE!

FEATURES:

- ★ Uses the new CRT9128 Video Controller driven by a 6502A CPU
- ★ On-Screen Non-Volatile Configuration
- ★ 10 Terminal Modes: ANSI, H19, ADM-5, WYSE 50, TVI-920, KT-7, HAZ-1500, ADDS 60, QUME-101, and Datapoint 8200
- ★ Supports IBM PC/XT, and Parallel ASCII Keyboards
- ★ Supports standard 15.75 kHz (Horiz.)
- ★ Composite or Split Video (50/60 Hz)
- ★ 25 X 80 Format with Non-Scrolling User Row
- ★ Jump or Smooth Scroll
- ★ RS-232 at 16 Baud Rates from 50 to 19,200
- ★ On Board Printer Port
- ★ Wide and Thin Line Graphics
- ★ Normal and Reverse Screen Attributes
- ★ Cumulative Character Attributes: De-Inten, Reverse, Underline and Blank
- ★ 10 Programmable Function Keys and Answerback message
- ★ 5 X 8 Character Matrix or 7 X 9 for IBM Monitors
- ★ Mini Size: 6.5 X 5 inches
- ★ Low Power: 5VDC @ .7A, ± 12VDC @ 20mA.

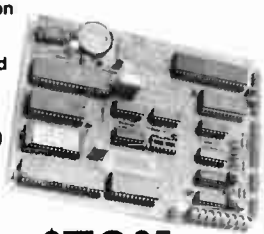

$79.95 FULL KIT

w/100 Page Manual

ADD $40 FOR A&T

OPTIONAL EPROM FOR PC/XT STYLE SERIAL KEYBOARD: $15

SOURCE DISKETTE: PC/XT FORMAT 5¼ IN. $15

Digital Research Computers

P.O. BOX 381450 • DUNCANVILLE, TX 75138 • (214) 225-2309

Call or write for a free catalog on Z-80 or 6809 Single Board Computers, SS-50 Boards, and other S-100 products.

TERMS: Add $3.00 postage. We pay balance. Orders under $15 add 75¢ handling. No C.O.D. We accept Visa and MasterCard. Texas Res. add 6-1/4% Tax. Foreign orders (except Canada) add 20% P & H. Orders over $50 add 85¢ for insurance.

I.M. INSTRUMENTS

Use with any 3 1/2 or 4 1/2 DVM to make direct accurate measurements in the shop or field. As easy to use as your DVM. All have professional features at affordable low cost.
Designed and made in Canada with full one year warranty.
For a free brochure telephone 1-(519) 756-3770 or write us.

Available Through:
ACTIVE COMPONENTS
CYPRUS PRODUCTS
CANADIAN TELETRONICS
K.B. ELECTRONICS

I.M. INSTRUMENTS
776 COLBORNE ST.
BRANTFORD, ONT.
N3S 3S1
(519) 756-3770

Circle No. 7 on Reader Service Card

World Radio History

Circle No. 8 on Reader Service Card

SECOND ANNUAL

MOORSHEAD PUBLICATIONS

Subscribe N

over $10,000 in the latest com and save up to 58%

YOUR CHANCE TO WIN THE LATEST IN COMPUTER TECHNOLOGY FROM TOSHIBA. ALL YOU HAVE TO DO IS ENTER!

Celebrate MOORSHEAD PUBLICATIONS Anniversary as Canada's No.1 publisher of computer and electronics magazines by entering our ANNIVERSARY SWEEPSTAKES! You could become the lucky winner of the Toshiba products shown here worth over $10,000... no purchase necessary... ALL YOU HAVE TO DO IS ENTER!

HOW THE SWEEPSTAKES WORK

There are two ways of entering: take out a new subscription, or renew one, to any of the participating magazines, before May 10th, 1988 and your name will be entered for the draw if you use an official entry form OR if you write (boldly and clearly) the word "SWEEPSTAKES" on other cards or forms.

If you wish to enter without subscribing you may use the Official Entry Form on this page; photocopies are NOT acceptable. Only one entry per envelope is acceptable. On May 15th, 1988, a random draw will be made from qualifying entrants. The first entrant drawn to answer a time limited skill testing question correctly will be declared the winner.*

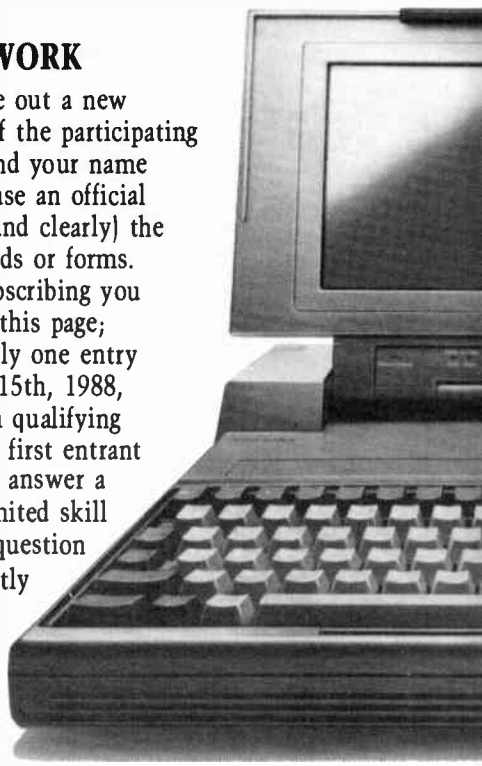

THESE GREAT PRODUCTS FROM TOSHIBA COULD BE YOURS!

If you're the lucky winner of our ANNIVERSARY SWEEPSTAKES, we'll arrange for you to receive at your home or office the products shown; a total value of over $10,000! Simply by subscribing to (these publications) you have the chance to win the very latest in computer technology with the quality and reliability you've come to expect from Toshiba. You'll be able to conduct professional business transactions and computerize your business or home as never before!

TOSHIBA
WE MEAN BUSINESS
INFORMATION SYSTEMS DIVISION

World Radio History

ANNIVERSARY SWEEPSTAKES

ow and Win!

uter technology from Toshiba

n your subscription!

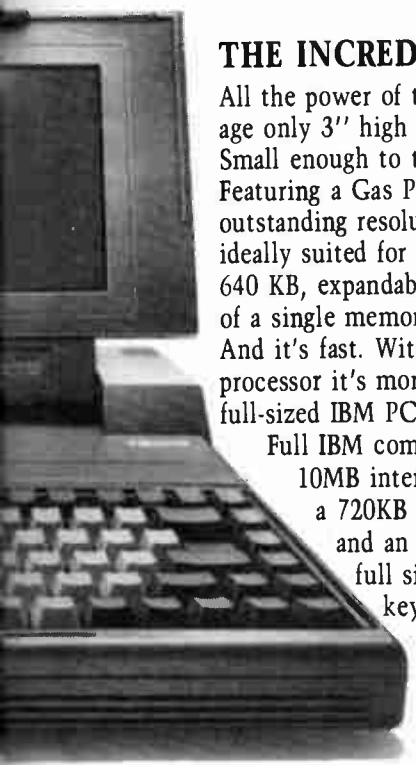

THE INCREDIBLE T3100...

All the power of the top of the line desktop in a package only 3" high when closed and only 14 pounds. Small enough to take anywhere!

Featuring a Gas Plasma screen, the T3100 provides outstanding resolution. At 640 by 400 pixels, it's ideally suited for graphics. A memory capability of 640 KB, expandable to 2.6MB with the addition of a single memory card.

And it's fast. With an 80286-2 microprocessor it's more powerful than a full-sized IBM PC-AT Desktop*.

Full IBM compatibility; a 10MB internal hard disk; a 720KB floppy disk; and an 81 key full sized keyboard.

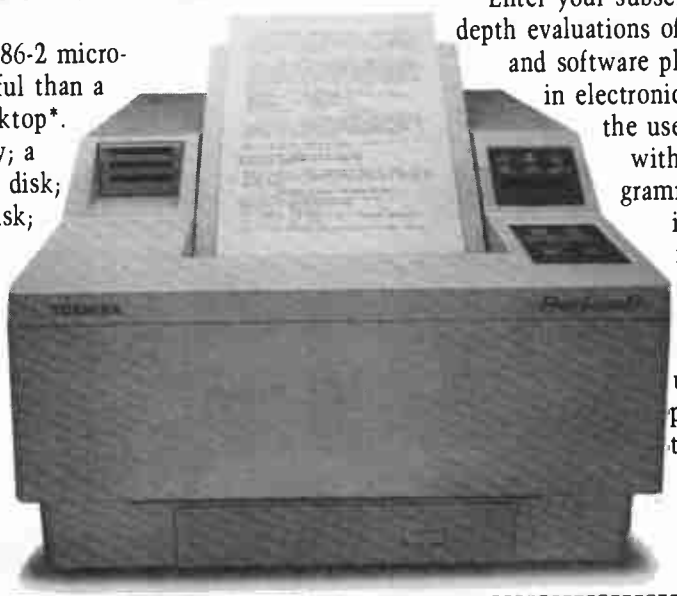

THE NEW PAGELASER 12

Laser printer quality with a whole lot more.

Outstanding full-page print quality and graphics, with its resolution of 300 dots/inch. And at 12 pages/minute it's incredibly fast.

Long product life at 600,000. It holds up to 750 sheets, more paper than anyone else.

Up to 2MB of memory and a 16-digit English-Language panel display. A high duty cycle of 10,000 pages/month.

It comes standard with many features including Serial and Parallel RS232 Interfaces.

*IBM PC-AT is a registered trademark of International Business Machines Corporation.

*Employees and their families of Moorshead Publications and Toshiba Canada are not eligible to enter.

MAKE THE MOST OUT OF YOUR TOSHIBA SYSTEM WITH THE MAGAZINES OF THE MOORSHEAD GROUP... COMPUTING NOW! ELECTRONICS & TECHNOLOGY TODAY, COMPUTERS IN EDUCATION.

Enter your subscription(s) and receive in-depth evaluations of computers, peripherals, and software plus the latest happenings in electronics & technology. Expand the use of your microcomputer with probing articles on programming break-throughs and important news that will increase your "computer consciousness"! You will find applications and innovations you can use directly on any computer and keep abreast of the newest developments in microcomputing!

Closing dates for entries May 10th, 1988.

SECOND ANNUAL

OFFICIAL ENTRY FORM MOORSHEAD PUBLICATIONS ANNIVERSARY SWEEPSTAKES

☐ Yes, enter my name in the **ANNIVERSARY SWEEPSTAKES** for $10,000 in **TOSHIBA** products, start my subscription to ☐ Computing Now!, ☐ Electronics & Technology Today, ☐ Computers in Education for the term checked below as a saving of up to 58% on the newsstand rates.

☐ One Year for $19.97 ☐ Two Years for $36.97

☐ NO, I don't wish to subscribe now, but tell me if I've won

MOORSHEAD PUBLICATIONS ANNIVERSARY SWEEPSTAKES

Name _____ Company _____

Address _____

City _____ Province _____ Postal Code _____

Check one:

☐ Payment enclosed Charge my: ☐ American Express ☐ Visa ☐ MasterCard.

Card No. _____ Expiry Date _____

Special subscription rates are for ANNIVERSARY SWEEPSTAKES only. (Savings are up to 21% off regular subscription rates)
Moorshead Publications, 1300 Don Mills Road, North York (Toronto), Ontario M3B 3M8 Tel: (416) 445-5600 Fax: 416-445-8149

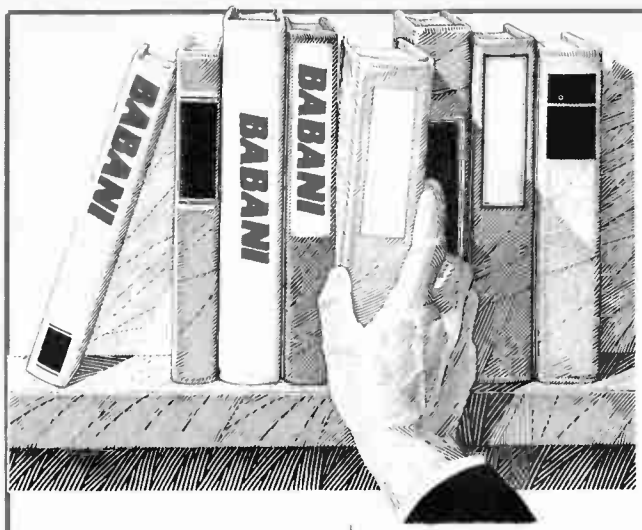

BABANI book offer

Exclusively available in Canada from Moorshead Publications.

EXCELLENT GIFT!

PROJECTS

BP74: ELECTRONIC MUSIC PROJECTS $10.00
R.A. Penfold
Although one of the more recent branches of amateur electronics, electronic music has now become extremely popular and there are many projects which fall into this category. The purpose of this book is to provide the constructor with a number of practical circuits for the less complex items of electronic music equipment, including such things as a Fuxx Box, Waa-Waa Pedal, Sustain Unit, Reverberation and Phaser-Units, Tremelo Generator etc.

BP24: TRANSISTOR SELECTOR GUIDE $15.00
Listings of British, European and eastern transistor characteristics make it easy to find replacements by part number or by specifications. Devices are also grouped by voltage, current, power, etc., includes surface-mount conversions.

BP50: IC LM3900 PROJECTS $4.25
The purpose of this book is to introduce the LM3900 to the Technician, Experimenter and Hobbyist. It provides the groundwork for both simple and more advanced uses and is considerably more than just a collection of simple circuits or projects.

BP75: ELECTRONIC TEST EQUIPMENT CONSTRUCTION $5.25
This book covers in details the construction and use of a wide range of test equipment for both the electronics hobbyist and radio amateur. The projects are fairly simple to build and the components are inexpensive and easily obtainable.

BP92: ELECTRONICS SIMPLIFIED - CRYSTAL SET CONSTRUCTION $5.25
This is a book written especially for those who wish to participate in the intricacies of electronics.

BP101: HOW TO IDENTIFY UNMARKED IC's $1.95
An unusual and fascinating chart that is highly recommended to all those interested in electronics and which will hopefully pay for itself many times over, by enabling the reader to use IC's that might otherwise have been scrapped.

BP121: HOW TO DESIGN AND MAKE YOUR OWN PCBs $5.85
The purpose of this book is to familiarise the reader with both simple and more sophisticated methods of producing printed circuit boards. The emphasis of the book is very much on the practical aspects of printed circuit board design and construction.

BP180: ELECTRONIC CIRCUITS FOR THE COMPUTER CONTROL OF MODEL RAILWAYS $9.00
Shows how home computers can easily be applied to the control of model railroads and other quite sophisticated control. A variety of projects are discussed as well as circuits for train position sensing, signal and electric points control etc.

BP185: ELECTRONIC SYNTHESISER CONSTRUCTION $9.00
With this book a relative beginner should be able to build, with the minimum of difficulty and at a reasonably low cost, a worthwhile monophonic synthesiser and also learn a great deal about electronic music synthesis in the process.

COMPUTERS

BP72: A MICROPROCESSOR PRIMER $5.25
In an attempt to give painless approach to computing, this inexpensive book will start by designing a simple computer and then the shortcomings of this simple machine will be discussed and the reader is shown how these can be overcome. A glossary of microprocessor terms is at the end of the book.

BP78: PRACTICAL COMPUTER EXPERIMENTS $5.25
The aim of this book is to enable the reader to simply and inexpensively construct and examine the operation of a number of basic computer circuit elements and it is hoped gain a fuller understanding of how the mysterious computer "chip" works.

BP86: AN INTRODUCTION TO BASIC Programming Techniques $5.85
This book is based on the authors own experience in learning BASIC and also in helping others, mostly beginners to programming, to understand the language.

BP115: THE PRE-COMPUTER BOOK $5.85
Aimed at the absolute beginner with no knowledge of computing, this entirely non-technical discussion of computer bits and pieces and programming is written mainly for those who do not possess a microcomputer but either intend to one day own one or simply wish to know something about them.

CIRCUITS

BP42: 50 SIMPLE L.E.D. CIRCUITS $5.85
Contains 50 interesting and useful circuits and applications, covering many different branches of electronics, using one of the most inexpensive and freely available components.

BP85: INTERNATIONAL TRANSISTOR EQUIVALENTS GUIDE $9.00
This book is designed to help the user find possible substitutes for a popular user-oriented selection of modern transistors and includes devices produced by over 100 manufacturers.

BP140: DIGITAL IC EQUIVALENTS AND PIN CONNECTIONS $15.00
Shows equivalents and pin connections of a popular user orientated selection of Digital Integrated Circuits. Includes European, American and Japanese devices.

RADIO AND COMMUNICATIONS

BP7: RADIO AND ELECTRONICS COLOUR CODE AND DATA CHART $3.00
Opens out to Wall Chart approximately 584 x 457 mm. Includes many Radio & Electronics Colour Codes in use in UK, USA, Europe and Japan. Covers Resistors, Capacitors, Transformers, Field Coils, Fuses, Battery Leads etc.

BP100: AN INTRODUCTION TO VIDEO $5.85
This is a book for the person who has just, or is about to buy or rent some video equipment but is not sure what it is all about.

BP125: 25 SIMPLE AMATEUR BAND AERIALS $5.85
This book describes how to build 25 amateur bank aerials. The designs start with the simple dipole and proceed to beam, triangle and even a mini-rhombic.

BP136: SIMPLE INDOOR AND WINDOW AERIALS $7.00
People living in apartments who would like to improve shortwave listening can benefit from these instructions on optimising the indoor aerial.

BP147: AN INTRODUCTION TO 6502 MACHINE CODE $10.00
The popular 6502 microprocessor is used in many home computers; this is a guide to beginning assembly language.

BP225: A PRACTICAL INTRODUCTION TO DIGITAL ICs $7.00
This book deals mainly with TTL type chips such as the 7400 series. Simple projects and a complete practical construction of a Logic Test Circuit Set are included as well as details for a more complicated Digital Counter Timer project.

BP47: MOBILE DISCOTHEQUE HANDBOOK $7.80
Divided into six parts, this book covers such areas of mobile "disco" as: Basic Electricity, Audio, Ancillary Equipment, Cables and Plugs, Loudspeakers, and Lighting. All the information has been considerably subdivided for quick and easy reference.

BP131: MICRO INTERFACING CIRCUITS - BOOK 2 $9.00
Intended to carry on from Book 1, this book deals with practical applications beyond the parallel and serial interface. "Real world" interfacing such as sound and speech generators, temperature and optical sensors, and motor controls are discussed using practical circuit descriptions.

BP141: LINEAR IC EQUIVALENTS AND PIN CONNECTIONS ADRIAN MICHAELS $23.80
Find equivalents and cross-references for both popular and unusual Integrated circuits. Shows details of functions, manufacturer, country of origin, pinouts, etc.,. includes National, Motorola, Fairchild, Harris, Motorola, Intersil, Philips ADC, AMD, SGS, Teledyne, and many other European, American, and Japanese brands.

BP156: AN INTRODUCTION TO QL MACHINE CODE $10.00
The powerful Sinclair QL microcomputer has some outstanding capabilities in terms of its internal structure. With a 32-bit architecture, the QL has a large address range, advanced instructions which include multiplication and division. These features give the budding machine code programmer a good start at advanced programming methods. This book assumes no previous knowledge of either the 68008 or machine code programming.

BP59: SECOND BOOK OF CMOS IC PROJECTS $7.80
This book carries on from its predecessor and provides a further selection of useful circuits, mainly of a simple nature. the book will be well within the capabilities of the beginner and more advanced constructor.

See Order Form in this issue

World Radio History

Revised Edition

$1.50

Software Catalogue Spring 1988

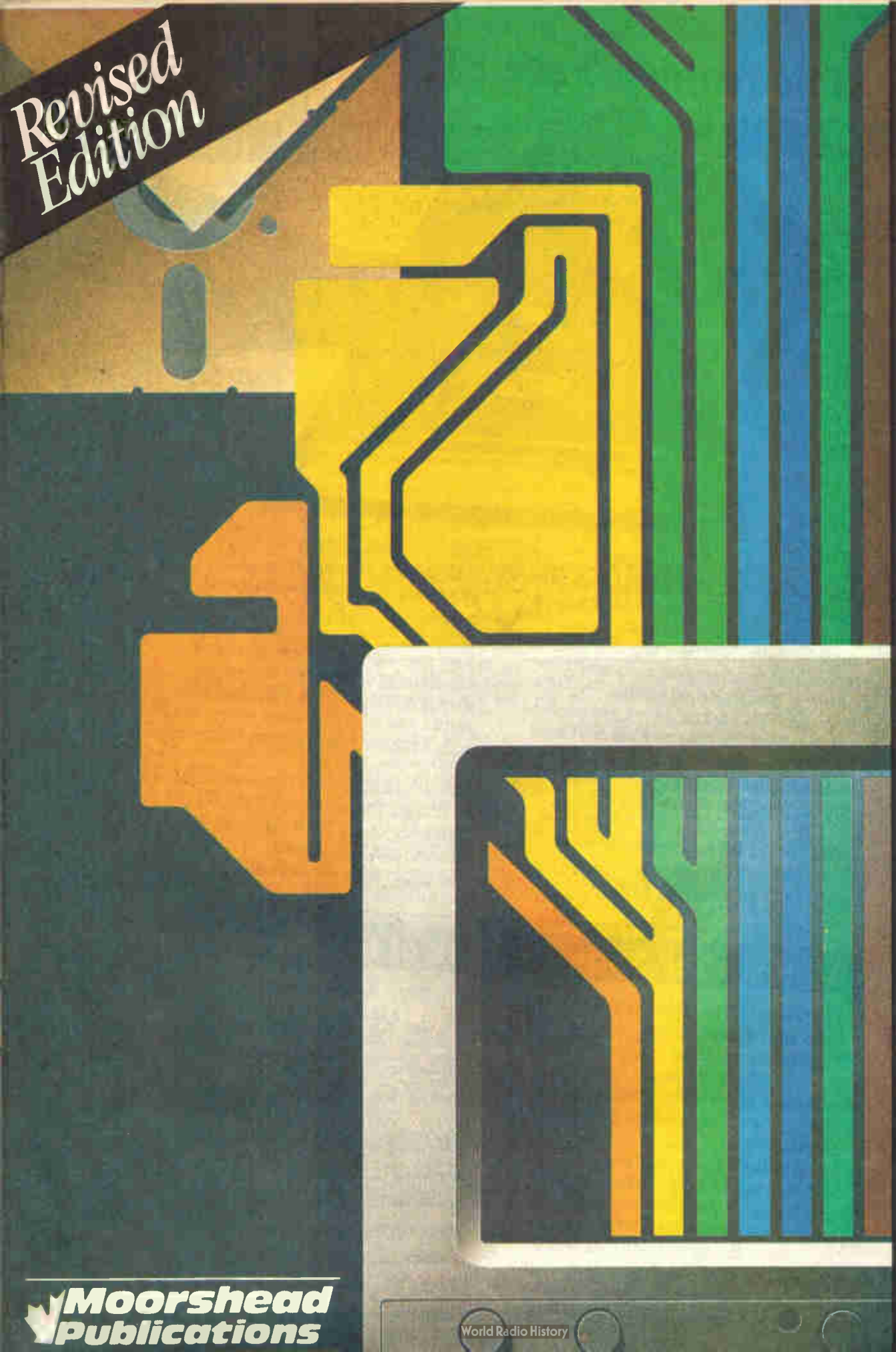

Moorshead Publications

World Radio History

The Almost Free PC Software Disk of the Month Club

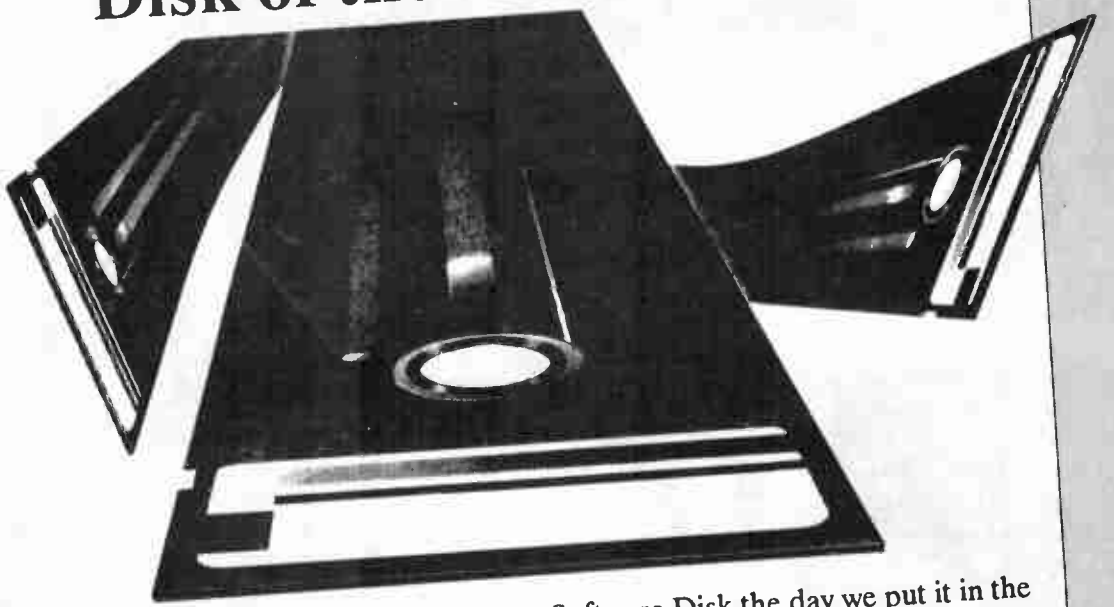

We have often been asked if a subscriber to one of the magazines of The Moorshead Group could arrange to receive each new PC disk automatically. Not only will this save on long distance telephone calls and postage, it will also save time. Because YOU asked us, we are pleased to introduce the **Almost Free Software Disk of the Month Club.** While the name may be hard to say, the Club is easy to join. Here's how it works:

- You give us the authorization on the form below to charge to your credit card each new Almost Free PC Software Disk the day we put it in the mail to you. There will be approximately one new disk each month.
- You may cancel this arrangement at any time by calling our Software manager, Rick Cree. You may also return any disk that does not meet with your expectations for immediate refund.

Yes, it's that simple. If you would like to receive this service, please fill out the following order form and mail it to Moorshead Publications. The service will begin with the next disk.

Almost Free Software Disk of the Month Club

Yes, I want to be a part of the Moorshead Publications, Almost Free PC Software Disk of the Month Club. By completing this order form, I authorize Moorshead Publications to charge my credit card for each new disk as published.
I understand there will be approximately 1 disk per month and that I will be charged the advertised price. I also understand that the maximum charge for any disk will be $30.00 (Moorshead Publications is not planning any price increases. This takes account of double-disk volumes).

Send your order to
Moorshead Publications
1300 Don Mills Road,
North York, Ontario
M3B 3M8
or call **(416) 445-5600**

Visa ___ Mastercard ___ American Express ___
Account # _____ Expiry Date _____
Signature _____ Date _____
Mail disks to: _____
Address _____
Town/City: _____
Province: _____ Postal Code: _____

World Radio History

Almost Free PC Software

VOLUME 1

PC-WRITE An earlier, compact version of this well-known word processor – perfect for program editing. PC-Write comes extremely close to equalling the power of commercial word processors costing several hundred dollars. With full screen editing, sophisticated cursor movement, PC-Write also boasts features such as user-definable help screens and a 'printer ruler file' which can be customized to work with virtually any printer.

SOLFE is a small BASIC program that plays baroque music. While it has little practical use, it's a lot of fun. It's also a fabulous tutorial on how to use BASICA's sound statements.

PC-TALK Telecommunications packages for the IBM PC are typically intricate, powerful and huge. This one is no exception. It has menus for everything and allows full control of all parameters. It does file transfers in both ASCII dump and MODEM7/XMODEM protocols. And, it comes with a large documentation file.

SD This sorted directory produces displays which are a lot more readable that those spewed out by typing DIR.

FORTH This is a small FORTH, written in Microsoft BASIC. A good tool for teaching the ideas and concepts of this esoteric, but useful language.

LIFE This is an implementation of the classic ecology game written in 8088 assembler code. While you may grow tired of watching the cells chewing on each other, the source code provides a good example of how to write assembler applications.

MAGDALEN This is another BASIC music program. We couldn't decide which of the two we liked better, so we wound up putting both of them on the disk.

CASHACC is a fairly sophisticated cash acquisition and limited accounting package written in BASIC. It isn't exactly BPI, but it's a lot less expensive and suitable for many small business applications.

DATAFILE is a simple data base manager, written in Microsoft BASIC.

UNWS WordStar has an unusual propensity for setting the high order bits on some of the characters in the files it creates. Here's a utility to strip the bits and 'unWordStar' the text. The assembler source code is also provided.

HOST2 This program includes BASIC source and documentation files to allow users with Smart-Modems to access their PC's remotely.

$19.95

VOLUME 2

SWEEP is a disk utility which virtually replaces the DOS Copy command. It lets you COPY, REN, TYPE and DEL files quickly and easily from a simple menu.

WORLDMAP is a sophisticated graphics program which draws a very detailed map of the world. It can display its wares on your monitor, or send them out to a dot-matrix printer.

ANITRA plays Anitra's Dance by Edvard Grieg. A beautiful addition to your computer music collection.

RAMDISK is one of the most useful utilities you'll ever plug into your PC. Once installed, it creates a virtual drive in memory on your PC. Files can be copied to the RAM-disk and accessed in less time than real drives take to turn on their LEDs.

ALIEN Plays a bizarre adventure game and will lead you into some of the most exotic spots in the universe. It comes with a massive data file for an adventure that you won't get tired of 'til the dragons come home for the evening.

FOS is a well designed personal finance manager which will do much to help you tame your cheque books.

JUKEBOX represents yet another PC music system. This one comes with a host of songs to play and some really electric graphics.

ASMGEN is one of the best text disassemblers we've come across. It takes any executable COM or EXE file and produces an assembler listing. It's surprisingly good at distinguishing between code and embedded data or text.

STRUCT will appeal to the rabid programmer in everyone. It enables MASM to be used to assemble a higher level language. Included also is a test file to illustrate the syntax.

PRTSC replaces the internal PC screen dump code with something more suited to reality. It allows one to hit the PrtSc* key and then select the print quality from a menu. It supports a number of popular printers.

BREAKOUT plays a PC version of the popular game. It will accept input from either a joystick or the keyboard. The graphics are good and the action is adjustable from a beginner's level right up to 'fast and nasty'.

UTIL is a collection system utilities which can be accessed from a single menu. Among its many talents are a sorted directory, keyboard redefinition and the facility for scrolling up and down through a text file.

$19.95

VOLUME 3

FIXWS is a simple utility which modifies WordStar files so that they can be used by programs which work with ordinary ASCII files.

WRT DOS 2.0 allows for each file to have a 'read only' flag, but it lacks a way of manipulating them. This pair of utilities allows you to set and unset this flag, protecting important files from accidental erasure.

BROWSE is a timesaving program which provides a useful alternative to the DOS 'TYPE' command. BROWSE allows you to easily scroll up and down through text files, saving you the effort of running your word processor just to get a quick look at a text file.

CAT If the DIR display is too dull for your taste, CAT may be just what you need. It will tell you everything you could possibly want to know about the files on your disks.

CGCLOCK is a simple little program which displays the running time in the upper right hand corner of your screen. In addition, the program has lots of display options and works with the colour graphics card.

CURSOR A tiny twenty-four byte program which displays a large cursor on your monitor.

CMP This program does a very elaborate comparison of two files and reports their differences. It can for example, spot corrupted files and may prove useful when dealing with files created by redirection.

JUMPJOE A bit like "Miner 2049'er", this game is certain to damage your mind. You get to be the janitor of a space station and must deal with berserk robots and other weirdness. It's a hoot!

CASTLE Wander through a deserted castle collecting treasures... but mind you don't get killed by the nasties. A solution is included should frustration set in.

78INT This is a small BASIC program to calculate interest using the rule of seventy-eight.

MOON is one of the nicest lunar lander games we've come across. This version uses high resolution graphics and startling sound effects to hurl you to your doom in style.

PERTCHT is a BASIC program which prints PERT charts. It should interest anyone involved in project management and scheduling.

DATNOIDS is one of the strangest games ever put on a disk. In fact, mere words don't serve to describe it: you'll have to try it for yourself.

NUK-NY This is one of the nastiest bits of software we've ever seen. It produces a full color high resolution simulation of a nuclear attack on New York City.

$19.95

VOLUME 4

BACKSCROLL Perhaps one of the cleverest DOS utilities, BACKSCROLL hooks itself into the PC and buffers whatever scrolls by. Using a well-thought out command structure, it allows one to scroll back and forth through text which would normally have scrolled off the screen into oblivion.

BIGCAL is a BASIC program which performs calculations on extremely large numbers. Using floating point form instead of scientific notation, very accurate calculations can be made.

BUGS is an off the wall ASCII game in which a player uses the cursor pad keys to move a 'nuclear fly swatter' around the screen blowing up a long crawling bug.

CLOCK is a useful tutorial in writing character oriented device drivers for the PC. In addition, the program is an improved re-placement CLOCK.SYS file which works with many real time clocks. The ASM file is included.

CRYPTO is a BASIC program which unscrambles cryptograms. It's an interesting study for puzzle enthusiasts.

DEFRAG is a utility that lets you "de- fragment" your disks to make your applications run faster. The utility reorganizes a disk, connecting up the fragments of files created by DOS.

DOSEDIT is one of the most useful DOS utilities available. it enhances the command line facility of MS-DOS by creating a command stack. Instead of merely being able to recall a command with the F3 key, DOSEDIT lets you use the cursor arrow keys to scroll through a whole stack of previously entered commands, re- executing the ones you need.

DUMP is a utility program designed to produce Hex dumps of object files. Useful in its own right, the program also serves as a good example of how to use DOS disk service calls. The ASM file is also included.

FREE is a tiny file which tells you how much space is left on a disk... without having to view an entire directory listing. Its especially handy for hard disk systems.

KBFIX displays the status of the keyboard lock keys on the screen and expands the size of the keyboard character buffer to avoid losing bytes.

LABEL changes the labels on disk drive volumes. It's. a simple utility, but useful if you use volume labels to keep track of your disks.

LIST is an improved version of the DOS TYPE command which shows you the contents of a file page by page.

World Radio History

Almost Free PC Software

MEMBRAIN is the most sophisticated RAM disk program we've seen yet. It lets users install variable sized disks and provides control over several other parameters.

MONOCLOK is a screen clock display program, designed specifically to work with monochrome displays.

MOVE is a disk utility which moves and optionally erases disk files. Using wild cards, the user can ensure that specific types of files are not MOVED by the program.

NEWBELL is a tiny program which performs the lowly task of changing the sound of the PC's control G beep.

NUSQ is a file un-squeezer. Its a useful utility for people who download compressed files form bulletin board systems.

PARCHK is a trap which prevents the system from 'freezing' when a "parity error" is encountered. It gives you an option of finding out what caused the error and recovering from it.

PURGEDUP is an intelligent little program which cleans up obsolete backup files. Very useful on a hard drive.

PX is a cross reference generator for assembler programs. It helps you keep track of where you put procedures in large files.

QS is a DOS patch which eliminates some of the wait encountered when DOS is booted while it performs a number of system checks. The program is not compatible with all software, but is still handy to have.

SDIR is an improved sorted directory program.

SP is a clever print spooler which lets you 'print' files into a RAM buffer. The PC then sends the file to the printer at its leisure, leaving the user free to move on to other tasks using the computer.

SPACE INVADERS A fast variation of this popular arcade game. the graphics are superb.

SPEED is a simple program which changes some of the PC's floppy disk parameters and effectively speeds up disk accesses for some applications.

VDEL is a multiple deletion program that queries the user prior to erasing each entry. Similar to MOVE, but much smaller.

WHEREIS will locate a file on a disk even if it lurks in a subdirectory. Most useful on hard disk systems.

WIZARDS is an adventure game in the classic style, except that it ranks as one of the most sarcastic programs in creation. The program is vast... you can wander about its darkened corridors for hours.

$19.95

VOLUME 5

AREACODE is a useful tool if you use the telephone a lot. Give it an area code and it will match it with the city in which the code is used.

D in another sorted directory program. This one emulates the CP/M style D, which is arguably more useful for most applications.

FRACTALS An amazing implementation of the Mandlebrot Microscope, which generates unearthly images on your screen.

HIDE is a set of utilities which let you create, enter and remove invisible DOS directories. This allows you to set up a hard drive system with secure areas which can only be used by people who know about them.

LAR is a library utility that allows you to concatenate several small files into a library to save on disk overhead. Individual files can be extracted as they are needed.

MAIL1 is a mailing label utility written in BASIC.

MORERAM This is an assembler program. You need MASM and LINK to make it work. It lets you alter the memory setting on the PC's motherboard to enable it to use more than 640K RAM. It will even let you set the switch settings to 64K to speed up disk boots and then change the RAM setting after bootup.

MORTGAGE generates amortization charts.

MXSET lets you control the parameters of Epson printers from the DOS command line. It's a lot easier than LPRINTing characters from BASIC every time you want to change print modes.

NUSQ unsqueezes files that have been previously compressed to save space. Should be of primary interest to bulletin board users.

PARCHK is an assembler program which requires MASM and LINK to work. It installs a trap for parity errors in your computer. A vital aid to help locate suspect RAM chips.

VDEL is a Delete with Verify program. You could type VDEL *.BAK and it would show them name of every .BAK file in the current directory and ask you if you want it deleted.

WHEREIS finds files in a complex hard disk system.

ZAXXONPC This is an incredible implementation of one of the most popular micro games ever created.

$19.95

VOLUME 6

3-DEMON is one of the most interesting variations on Pac-Man in the known universe. Instead of simply looking at a map of a maze, this program shows you a three dimensional view of it. You wander through endless corridors, munching food pellets or granola bars... your choice... and avoiding the deadly ghosts.

DU was one of the most powerful CP/M-based disk utilities ever created. This version for the PC captures much of its power and flexibility. It allows you to see what the tracks and sectors on your disks look like, recover erased or damaged files, and meddle with the system tracks.

GENERAL LEDGER This is a complete general ledger accounting program. Written in BASIC, the program possesses most of the features found in commercial packages. An enormous documentation file is also included.

PC-CHESS is a slick chess program which makes good use of the PC's colour graphics abilities and boasts a running chess clock.

RAMDISK is the assembler source code for a memory disk program. If you've always wanted to know how these things work, or have a secret desire to write your own variation of this useful utility, here's your chance.

VFILER is a file management utility which lets you view files in a directory and allows you to COPY, TYPE and even run programs... in short, it does almost everything DOS does but it's user- friendly.

QMODEM is unquestionably the best telecommunications package in existence. The most recent version of it is replete with windowing, multiple protocols, definable function keys. And the code is unspeakably well debugged.

ARC is a sophisticated file archiving program which stores several files in single library files. As an added bonus, ARC applies one of four data compression techniques to each file in order to optimize disk space.

ZAPLOAD is a utility for programers to handle Intel standard HEX files. Very fast and well documented.

SOPWITH Using superb graphics, SOPWITH lets you pilot a World War I biplane on dangerous bombing missions.

JSB Another BASIC music program for your collection. This one plays a soothing sonata.

STAR is one of a growing breed of small... somewhat silly... novelty programs. This one, as you might guess, draws stars.

SURFACE demonstrates the complexity of the "hat" function by graphing it.

OP is the operator program from the November '85 issue of Computing Now!

(2 Disk Set) $24.95

VOLUME 7

BLACKJACK is a BASIC implementation of this popular card game. It's both interesting to play and enlightening to dismantle. It can, of course, be easily listed so you can see how it works.

EDSCR is a screen editor which can be used with virtually any programming language from assembler to dBase III. The program lets you 'paint' PC screens with block graphics and saves them as .DAT files which can be easily adapted to work in most languages. An example screen is included.

FK allows you to make the function keys of your PC do more useful things under DOS. They can be redefined to execute commonly used commands and command sequences.

FXMASTER is a printer program for the popular Epson FX Series and compatible printers. It uses a full screen menu to enable you to easily change printer settings and modes.

INDEX allows you to generate indexes from WordStar documents... or text files from any other text editor. It's an invaluable writer's tool.

KEYCLICK is a memory co-resident program which will make your keys click. Small and easily included in an AUTOEXEC file, KEYCLICK solves many problems associated with clone keyboards.

PCBW is a small utility which makes colour screen displays show up in monochrome video. Great for users with colour graphics cards and monochrome monitors.

PINBALL is a pinball simulation that is easily worth the cost of this disk all by itself. The game plays much like a real pinball machine... but its hard to tilt.

QUICKGRAF is a powerful business graphics package which generates complex bar, line and scatter charts in medium and high resolution. An Epson with GrafTrax or compatible printer is necessary to produce hardcopy.

SERPENT is a variation on the classic snake game. Written in BASIC, this one is weird, but very fast.

SHOWCLK is yet another clock program... its the smallest one yet, and it beeps to chime the hour.

VTREE is a graphic TREE program that shows you how the subdirectories are set up on your disk... in a fashion more easily understood than the MS-DOS TREE

See Order Form on Page 13

World Radio History

utility.

WORLD is a remarkable program which incorporates a world map. It allows you to zoom in on specific areas of the globe, locate major cities and perform a number of useful calculation. It also has a feature for tracking hurricanes... tracked any good hurricanes lately?

$19.95

VOLUME 8

Load-Us allows users of the popular Lotus 1-2-3 and Symphony programs to run them on a hard drive. This preboot program does not "crack" Lotus's copy protection scheme, but it does help legitimate users overcome the inconvenience of keeping a "key" disk in a floppy drive while running Lotus or Symphony on a hard drive.

DDCAL is a very clever perpetual calendar and desk diary. It keeps track of your appointments and performs several other functions that you probably thought could only be done on the backs of match books.

PC-KEY DRAW is a remarkable public domain paintbox program which compares favorably with many commercial applications. It'll handle multiple screen images, business graphics and superb computer art – all in full colour. It's worth the cost of this disk all by itself. **CPU** is a tiny program which tells you the effective speed of your system.

XRAY is a remarkable co-resident utility which monitors what a program is doing while it's busy doing it. It allows you to interrupt the execution of your code and have a look inside.

GAME – well, there are no words for this program, or, at least, none that are printable. This game is a bit rude – depending on just how weird your mind is, it can get pretty bizarre. This program does use some suggestive language, and we recommend that young or sensitive users not boot it.

TUNE is a very small music generator which makes noises from within batch files. It's useful to see where things are in a complex process.

CHASM, or cheap assembler, is just the thing if you want to get into assembly language programming but don't want to spring for the Microsoft macro assembler package. It's reasonably fast, not too huge – it'll run in as little as sixty-four kilobytes – and it's cheap.

GETDIR is a resident directory utility. It allows you to see what files are on your disks, even if you're in the middle of doing something else.

COPYPC, not to be confused with the commercial Copy II PC, is a quick disk backup utility.

LOOKIT is a full screen browsing program which lets you scroll forward and backwards through text files – sort of like a tiny word processor with no editing features.

SYSLOCK is a security device for hard disk users. By running this utility on your XT or compatible, access to your computer will only be granted to users with a valid password.

$24.95 (two disk set)

VOLUME 9

SMALL C If you've ever wanted to try writing programs in the C language, this compiler will fascinate you. It's a restricted implementation of C, producing code which is compatible with Microsoft's MASM and LINK programs – you'll need these to get it going.

MAP is an interesting little utility which will check how DOS is situated in the memory of your computer and tell you a number of things about it. It's a useful programming tool, especially helpful if you're debugging software which interacts directly with DOS.

NOTE is the source file for the memory resident note pad which appeared in the March 1986 edition of Computing Now! It requires MASM and LINK to use. It will create a resident memo page that you can call up from within any application.

PANGO is one of the wildest games we've come across for the PC. While its premise is a bit improbable, it's fast and weird – hours of fun.

PC-SPELL is a spelling checker written in BASIC. Despite its pedestrian sounding origins, it's fast, accurate and easy to use. It can be listed if you want to see how it works, and comes with a large dictionary file and a utility to assist you in customizing it.

PEACOCK is a memory resident program which allows you to change the colours of your screen with alternate function keys. It's useful, for example, if you run software which insists on using eye-straining screen colours.

RECOVER is a utility which assists you in getting data back from damaged files. It lets you look at your files one sector at a time in order to put the pieces back together.

SDB is a small relational database. It isn't dBASE III, but it also doesn't cost quite as much. It's still pretty powerful and is eminently suitable for many business applications. It features on line help.

TALLY is a program which accurately counts the number of characters, words and lines in a file – all within your lifetime.

XENO edits the tracks and sectors of your disks in a user friendly format – or, at least, one that doesn't lunge for your throat every time you boot it. You can use it to explore DOS, fix trashed disks, unerase files and do all the other low level magic that sector editors are renowned for.

$19.95

VOLUME 10

MONOPOLY is the first working implementation of the classic board game that we've come across – and we've had several that bombed pretty colourfully. This one is great, though, with fast and occasionally sarcastic play, a graphic board display and pretty good sound effects.

D20 is the latest version of Steve's sorted directory program. This one uses DOS two calls and handles subdirectories.

EDIT is a lightning fast full screen editor, ideal for editing program source files, dBASE stuff or other ASCII phenomena.

BANNER takes mere text and prints it sideways on your printer – in gargantuan block letters that can be read from miles away if you have a good set of binoculars. It's not the sort of thing that you'd want to publish a book with, but sign makers will love it.

MORTGAGE is another utility to help you understand just what you've gotten yourself into. Its one of the nicest mortgage programs we've seen so far – lifelong debt and ruination has never been so well formatted.

QUICK speeds up your PC quite a bit. It hooks into the video and makes it run a great deal faster, eliminating at least some of the glacial slowness that makes an IBM what it is.

SPEECH is a rather remarkable little germ of code. It talks through the PC's internal squeaker speaker. The voice isn't exactly human, but it's understandable on most machines. This is an interesting bit of work, one that can be accessed from within other programs to create talking applications.

PC-AR is an accounts receivable package for the PC. While not the equal of some of the commercial software that handles this function, it will take care of the records for a small or medium sized business quite well.

$19.95

VOLUME 11

PAC GIRL is, predictably, a variation on the almost mythical Pacman game. This one moves fast, and plays much like the arcade version.

MENU lets you create a menu-driven tree-structured environment that is friendlier and more manageable than is DOS. It's ideal creating interactive systems for non-technical users.

Z80MU is one of the most brilliant pieces of software we've ever encountered – free or not. It actually emulates a Z80- based computer running CP/M on the PC with no additional hardware – you don't even need a V20. It will run almost all CP/M software, including old favourites like WordStar and dBase. However, Z80MU also includes features lacking in both C/PM and MS-DOS operating systems.

SERIO is the assembler file from the July edition of Computing Now! that implements an interupt-driven terminal in higher level languages such as C. It's also suitable for use with compiled BASIC. Both MASM and Link are required to use SERIO.

BREAKDOWN is a peculiar program which takes meaningful text, analyzes it and generates meaningless, but profound- sounding prose from it. If you've been wondering if your co-workers really read your office memos and reports, try filtering your prose through this program. The effects will be astounding.

XMODEM is a C language implementation of the XMODEM file transfer protocol, from the July 1986 edition of Computing Now!. It can be integrated into other programs to allow easy access to telecommunications facilities. This code requires SERIO (see above) and version three Lattice C.

GRABIT is the screen grab program from the July 1986 edition of Computing Now!. It will make a useable text file from the contents of ones screen at the touch of a key. MASM are Link are required.

$19.95

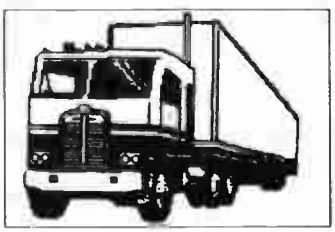

VOLUME 12

CV is a small utility for changing the volume name on disks. Since most of us never bother to specify volume names when formatting disks, this six hundred byte program provides a second chance.

BREAKOUT BOX is an assembly language program that hides in memory and shows you what your serial ports are doing. It's a valuable trouble-shooting utility for pin pointing serial printer and modem problems.

ICON MAKER allows you to generate sophisticated bit- mapped images. Its' easy to use and extremely colourful, producing data that can be incorporated into other programs.

World Radio History

Almost Free PC Software

SHELL is another DOS menu program. This one is very fast, free of 'snow', and provides easy access to virtually all DOS features.

STRIKER is an experience. It's a brilliantly written helicopter game in the style of Choplifter, complete with professional high resolution graphics and running spies. This is one of the best public domain games we've ever encountered.

RAMSET is a RAM expansion program from the July 1986 edition of Computing Now!. It allows you exceed the PC's 640K memory limit. Ramset also lets you bypass the PC's time-consuming memory check.

TRAP is the high-resolution Gemini patch program from the May edition of Computing Now!. It makes the Gemini 10x suitable for use with Personal Composer, but is easily modified to fix most bit-mapped printing problems. MASM and Link are required to assemble the program.

$19.95

VOLUME 14

CUT AND PASTE is a memory resident program that allows you to grab text from the screen of any application and paste it into any other application that accepts characters for input. You could, for example, copy part of a Lotus spreadsheet and paste it into a WordStar document.

INT13 will help you unravel the copy protection schemes of your software so you can make archive copies — just in case the cat takes a fancy to your masters. It prints a log of direct disk accesses and where they're called from so you can check out the code that's going after specific tracks, the heart of most protection systems. Includes the assembler source code.

PMAP tells you what's living in the memory of your system — and where. It will help you to find the resident utilities you have loaded and, more important, is great for sorting out peculiar interactions between multiple resident programs.

SOFT TOUCH is a keyboard macro program not unlike ProKey. It allows you to store up to twenty five thousand key strokes, has a built in screen blanker and great wandering herds of other features.

SUB CHASE is a first rate graphics arcade game. One sails across the clear blue sea — or green sea, depending on what sort of monitor you have — heaving depth charges off the stern to blow up subs. It's extremely well done and it has a panic button to clear the screen should the boss walk in. Requires a colour graphics card.

TheDRAW is an ANSI screen editor. It allows you to create and edit full colour screens of text and graphics which can subsequently be typed to make them appear — in full colour — or integrated into programs. Requires DOS two or better, ANSI.SYS and is more fun with a colour monitor.

TREK is the best Star Trek game anyone has yet devised for the PC. The graphics are stunning, the complexity is intense and the action scoots along at warp nine as soon as the program gets going. Requires a colour card.

CROSSWORD is a utility which translates text files from one application to another. It supports several popular word processors, including WordStar, WordStar 2000, Multimate, XYwrite, SideKick and standard ASCII. It saves ages worth of reformatting and does some useful things besides.

$19.95

BUSINESS

Our Almost Free Business Package is will add power and verstility to your business applications.

MA The Micro Accountant is a complete, working accounting and check register program, with a 25K documentation file. Requires BASIC.

PCWNDW22 A "Sidekick"-like co-resident window utility. Pop-up window functions include ASCII table, stopwatch, alarm, printer setup utility and notepad. The entire program takes up less than 30K of space on your disk.

PSHIFT A time saving and convenient 'memory partition' utility. Lets you define up to nine memory areas. Load programs such as dBase II and WordStar into separate partitions and 'flip' between them instantly with simple keystrokes.

PC-TOUCH Increase typing speed and accuracy with this easy-to-use typing tutor. Also provides accuracy and speed statistics. Requires BASIC.

PCYEARBK Appointments and reminder program to help you keep track of your time.

TASKPLAN Project management software which lets you track up to 50 tasks during 50 time periods (days, weeks or months). Requires BASIC.

NOCOLOR A handy little utility for users with monochrome monitors and colour software.

MAXIT A simple but subtle game for two human opponents, or one player and the computer. Hours of fun! Requires BASIC.

PERTCHT A sophisticated project management tool using the Program Evaluation Review Technique.

PLUS More utilities to help organize maintain and copy your files.

$19.95

VOLUME 15

ALTAMIRA This is one of the nicest public domain paint box programs available for the PC. Unlike most of the so- called graphics packages available for the PC, this one isn't restricted to doing bar charts and graphs. It does first rate pictures. Colour graphics card required.

FRACTAL This is the C source code for the fractal generator that first appeared in the August 1986 issue of Computing Now! Its useful even if you don't like fractals because it illustrates the use of high resolution graphics in C. Requires a C compiler and a colour graphics card.

NEMON This is a really weird game. You get stuck in the catacombs of king Nemon with nothing more than your wits and a flashlight. You have to find some keys, some treasures and, hopefully, a way around a host of arcade game nasties.

THOR used to be the god of thunder. Now he appears to be the world's most sophisticated desk calendar program. He'll remind you of appointments, keep track of your agenda and do things that would usually require a host of low-tech objects like pencils and note pads.

ROUND 42 This is a wholly bizarre variation on the theme of space invaders. No longer the dusty arcade game that it once was, this thing breaths new and rather ichorous life into the ceaseless battle between you and the phosphore aliens. This is one of the best computer games in creation. Requires a colour graphics card. **V20** is a CP/M emulator for users of the NEC V20 chip. Replace your existing 8088 with a V20, score this little program and most CP/M software will run on your system as if someone had stolen half the bits out of your PC. Regular MS-DOS isn't affected. Requires a V20 chip.

$19.95

VOLUME 16

ARCDIR The archive file compression system is the most efficient way to store large files in a small space. However, it's weird and complicated. This simple ARC directory utility was featured in the November 1986 edition of Computing Now!. Aside from being useful, it includes both a COM file and the source code so you can see how it works. Requires a C compiler if you want to meddle with it.

BRICKS The "Little Brick Out" game is one of the classic programs for microcomputers. This splendid version will get you turned onto simple games all over again.

DX This is a small DX-7 voice librarian, as found in the Book of Computer Music. It includes both a COM file and the assembler source code.

MOREROOM If you have a hard drive system you may have noticed that it's extremely inefficient with small files. Here's a collection of tricks to get substantially more space on your disk.

E88 While huge word processors like WordStar and PC-Write can be used as text editors, they're hardly very good at the task and they gobble a lot of disk space. If you're trying to manage a C compiler or an assembler on a pair of floppies you've probably encountered this. E88 is a tiny — but powerful — text editor.

EXPERT Commercial Expert Systems software is still in its technological infancy. If you're interested in learning about expert systems and how they relate to your computing needs, you should try this simple program.

FULLDOS A DOS enhancement program that makes the DOS user interface behave in a rather more friendly manner. It creates a command stack and lets you re-execute previous commands.

K9 This is yet another resident keyboard enhancer — with a difference. Aside from expanding the keyboard buffer, installing a screen timeout and so on, it makes a number of the alternate keys 'hot', giving you dozens of unique functions.

InstantMENU This is the code for the Instant Menus article which appeared in the November 1986 Computing Now!. With it, you can create elaborate batch file menus with absolutely no tricky programming. The menus can be easily altered with a text editor or word processor. Source code is included.

PALERT We've all occasionally run out of disk space while inside an application and discover that we've been dumped back to DOS unexpectedly. This is a serious drag if you've left a few hours of work behind you trashed in memory. This program warns you of an impending full disk.

$19.95

VOLUME 17

ARC512 This is the latest version of the de facto standard PC file compression and archiving utility. It will create, maintain and crack unpack ARC files, providing a convenient way to reduce the size of files and to merge pots of little files into a single larger one. See the November 1986 edition of Computing Now! for more about this.

ATC ATC stands for "Air Traffic Controller". In this colourful simulation of the rigors of managing the planes at a busy airport may, among other things, renew your interest in train travel.

DRAW POKER This is a really slick little poker machine simulation.

See Order Form on Page 13

World Radio History

The graphics are good, the play is fast and the machine doesn't always win. It's a shame it won't spew silver dollars out of your disk drives.

HercBIOS This set of routines will allow you to display text on a Hercules card when it's in one of its graphics modes — just as you can with a colour card. It will intercept the 10H interrupt vector so that anything that normally tries to print to the colour card will also work for the Hercules card.

HotDOS If you've ever found yourself wanting to run a second program without quitting your first application, then HotDos was made for you! Hit its control key combination from within most popular programs and it will give you a DOS prompt to run any other program at. When you're done, type EXIT and you'll be back in your first application.

KBD This is a very tiny keyboard buffer extender. It's a useful few bytes to have around, and extremely tiny.

LinkFOUR A simulation of "Connect Four", this is a deceptively simple game. It's easy to understand, but requires practice if you want to win. The graphics and sound effects are particularly good.

MONEY Yet another Canadian mortgage program, this easy- to-use program is surprisingly most colourful. It will also calculate charts for a variety of financial situations.

PCWINDOW This is a resident utility which lets you call up a number of useful "windows". These include an elaborate event timer, a note pad, an ASCII code chart and so on. It's well done, fast, and fairly small.

PD This program redirects the output of one's system from the printer port to a disk file. It lets you to use things that normally insist on having a printer on line even if you don't own one, or don't want hard copy .

$19.95

VOLUME 18

BRADFORD Fancy printing programs, like Printrix and Fancy Font, are slick but expensive. This public domain version does much of what they do, but it does it for free. Requires an Epson or Gemini dot matrix printer.

CARD This is the draw poker machine program from the December 1986 edition of Computing Now!. It's included here both as an executable COM file and as source code in C.

DIVERT This is a tiny program which doubles the effective screen printing speed of most programs which print through DOS.

DONKEY KONG This is a pretty snappy public domain implementation of the classic arcade game. Getting squashed by oil drums is more fun than anything. Requires a colour card.

MASTERKEY The Norton utilities are extremely handy, but they're also expensive. This public domain disk manipulation program offers much the same power for nothing. It offers track and sector editing, unerasing files, and all the general low level fiddling that the expensive programs do.

PRINTER This is the PRINTER.BAS program from the December 1986 edition of Computing Now!. It reprograms the high end characters of an Epson FX-80 (or compatible) printer to make them print IBM PC screen block graphics.

QUICKEY This little program speeds up the keyboard action.

ZOARRE This is another dungeon game, but terrifically well done and very intricate. It displays a picture of the room you're in, zaps you with various monsters and generally tries its very best to kill you. If you liked Castle you'll freak over this one.

$19.95

VOLUME 19

BOTH If you print out a lot of documents, manuscripts, program listings or other manifestations of hard copy, you'll have noticed that the backs of the pages usually look a bit bare. This program can slash your paper bill by allowing you to print long files on both sides of the sheets

DIAGS Written by the author of Z80MU, this collection of tools will be nirvana for the experienced PC programmer. It does things like generate an annotated list of all the interrupt vectors in your PC, let you meddle with the 6845 registers, test most of the ins and outs of your system and so on. It's a brilliant bit of work.

GRCP Graphic cut and paste is a memory resident tool that allows you to scoop things from a PC high resolution graphic screen and pop them into other applications. Shades of the Macintosh.

LOCKERUP This tiny microbe of code sleeps in your system until you have to leave your PC for a while. Then it enables you to irrevocably lock up your keyboard until you come back to restart it. It's perfect for offices where there are more fingers than hands to contain them.

MEGAPEDE Just when you thought that it was safe to play ASCII games again... This one is a sophisticated variation of the classic "snake" programs and it plays with the speed of a boa constrictor. Don't count on winning for a while.

MURPHY Sort of an iconoclast in a can, this program will print a random selection of several hundred of murphy's laws, corollaries and commentaries thereon each time it's run. If you put it in your AUTOEXEC file it will say something clever each time you start your computer. Slaughters more sacred cows than McDonalds ever will.

QUEBERT This fast PC implementation of the classic arcade game is every bit as exciting as the real thing but lacks a coin slot. Jump down the mountain, avoid the snake and try not to get clobbered with fresh fruit. Sounds like real life...

SAT This is a powerful, menu driven satellite data downlink terminal, as discussed in the December 1986 edition of Computing Now!.

spreadsheet package, very similar in its abilities to the more popular functions of Lotus 1-2-3. Unlike Lotus, it doesn't cost anything and it isn't copy protected.

ASYNC This is an assembler file which creates a device driver to make the PC's serial ports behave as they should, with interrupt driven buffered inputs and outputs. This is a programmer's delight. Requires MASM to use.

ChessII This is one of the best chess programs yet devised for the PC. Aside from being small and fast, it lets you physically pick up the pieces and move them rather than entering board co-ordinates. Plays an evil game, too.

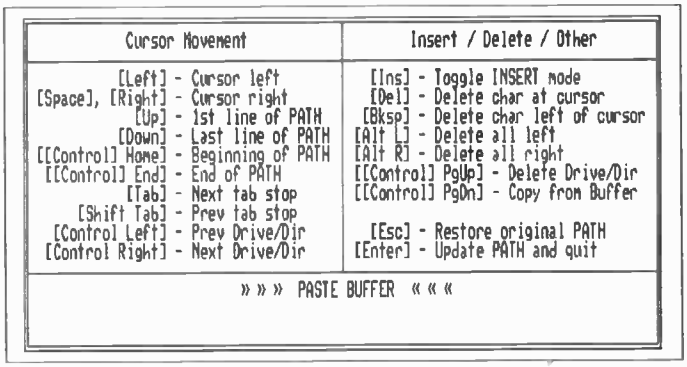

SCAV This is a great program for people who buy economical floppy disks and just about everyone else who can't afford a clean room for their PCs. It cruises through one's disks locking out bad sectors and restores previously 'fried' disks to usefulness. The ASM source code is included, as well as a COM file.

SimCGA If you own a Hercules card you'll have encountered the intense frustration of not being able to use programs written to employ the graphics of a standard colour card. This utility does an astoundingly good job of making the Herc card behave like a colour graphics adapter for quite a lot of software.

STUFFIT Stuffit is a disk management utility which stuffs files into the inner tracks of a floppy disk, allowing the outer tracks to be used for work space. This improves the disk access times and the reliability of mostly full disks considerably.

$19.95

VOLUME 20

ARTIFICIAL ART This is one of the most useless programs anyone's ever written, but you'll probably spend a lot of time running it. It generates an ever changing graphic image on your PC — with accompanying sound. While it may seem a bit pedestrian, it's a gas to watch. Requires a colour graphics adapter.

AsEasy This is a public domain

HAUNT This is a haunted house adventure game. You wander around looking for the mysterious pumpkin man while picking up things, encountering ghosts and, if you're not careful, getting busted for shoplifting. Very nicely executed, and it doesn't require any graphics facilities.

LPTX The most flexible printer redirection program imaginable, this thing lets you set up virtual printers, that is, disk files to capture the output of things that think they're printing. Includes both executable and source files.

PITFALL This is a supremely clever ASCII game. Aside from being an absolutely superb game in itself, it's a clever use of the PC's screen. You get to pilot a spaceship down a winding, rather nasty pit. More fun than being beamed into a supernova.

RAMDISK Once you've installed a normal RAM disk, it's there for the duration. This one allows you to change the size of the disk on the fly, or blow it away all together, without having to reboot anything.

ZAPDRAW This is the C source code for the Graphics in C article from the January 1986 edition of Computing Now!. It creates a general purpose high speed PC graphics library, suitable for use on both the colour card and the Hercules board. Requires Lattice C or something similar.

$19.95

World Radio History

Almost Free PC Software

VOLUME 21

CACHE A disk cache program allows one to vastly speed up the disk access of a PC by stashing frequently used sectors in memory. This public domain cache program is extremely fast and fairly intelligent about which bits of oxide it retains.

COREWARS Perhaps the first program to truly embody the spirit of the phrase "computer game", Corewars pits tow programs against each other. The object of the game is to crash the other code. Quite a blast when space invaders has lost its allure.

EMACS This is the latest word in well-executed programmer's text editors. It has multiple windows, macros and will even create a DOS shell for you so that you can skip out for a while to execute another task. Requires NANSI.SYS (see below).

MTS One of the shortcoming of DOS is that is only wants to let you run one program at a time. With MTS, you can run two, flipping back and forth between them at the stab of a key. This is the first one of these things we've seen that's bug-free.

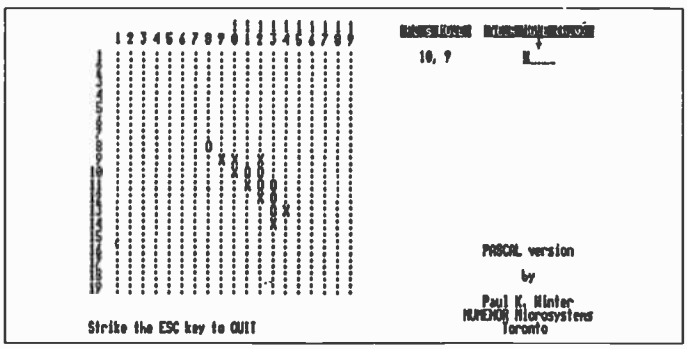

VIEW This is the fastest full screen file browser in creation. It allows you to page back and forth through a file – it's much slicker than the DOS "TYPE" command. Requires NANSI.SYS (see below).

NANSI.SYS A replacement of ANSI.SYS, the improvements in the performance of your system that NANSI can produce are almost god-like. It includes a high speed screen driver and additional escape sequence screen handlers.

MIDIzap Figuring out the secret codes that drive some of the more sophisticated MIDI instruments is a lot easier if you have something to send and receive them with. This little MIDI debugger runs with the popular ROland MPU-401.

SHELL This is a command.com replacement that implements a UNIX-like environment. It supports many features that DOS would like to have, and a much tighter command structure. It's surprising how easy it is to get to like UNIX.

MUSIC SYSTEM This is a pair of programs which allow you to edit and play three voice music on the PC. You may wonder how one gets three voices on the PC's speaker – its tricky, but this code manages it. These programs are not compatible with PC/ATs.

DEV This is a tiny utility that will locate the device drivers in your system's memory. It includes the assemble source code.

$19.95

VOLUME 22

CALENDAR This program prints up a calendar for any month in the twentieth century. It's very useful if you want to know which days people were being idle on in 1921, for example.

DFA This a a strange disk accelerator program which attempts to anticipate which sectors your software will call for and fetch them when the computer isn't busy. It can speed up some programs quite noticeably.

FSDEBUG Essentially this thing does the same thing as the DOS DEBUG program, but it does it so nicely. You can scroll forward and backward through a disassembly, set breakpoints, trace code and so on, all with a full screen display.

GRAB.ASM This is the source code for the graphics grab program form the March 1987 issue of Computing Now! Requires MASM to assemble.

SCROLL This is a resident scroll lock key enhancement. It's not all that exciting, but, then at 247 bytes, it's not all that big either.

SIDEWAYS This program lets you print awkward-sized documents sideways on an Epson printer.

PLAYSONG This is the source code for the linkable interrupt driven music playing package from the March 1987 issue of Computing Now! It also includes the MUSIC.C demonstration program. Requires MASM to assemble and a C compiler to deal with the demo.

ZAPDRAW2 This is the C language source file and updated header file for the text and graphics module from the February 1987 edition of Computing now! It embodies several significant enhancements over the published version, including a writing speed increase of about 10 times. Requires ZAP 1.C from our Volume 20 disk and a C compiler.

PINBALL2 If you wasted a meaningful part of you life on the pinball game on our Volume 7 disk, this one will help you ruin what's left of it. It's the fastest, most colourful, weirdest pinball program to date.

MACSHOW This program allows you to look at Macintosh MacPaint image files on a PC. It will also print them and convert them to PC compatible bit maps. Several sample pictures are included. Requires a colour card.

WILLY THE WORM This is a fast graphic game in which you try to get Willy the Worm home. It's extremely strange.

$19.95

VOLUME 23

ARCE A really tiny archive utility, this thing will extract members from ARC files without tying up half a disk for itself.

BABY An extremely warped game, this thing is engaging and fairly challenging none the less. It involves catching babies who are leaping out of a burning building.

CHMOD This is a useful utility for reading and changing the bits in a DOS mode flag.

CITYDESK This is an elegant fancy printing program that allows you to do some desktop publishing functions with a dot matrix printer.

DOG A disk organizer, Dog will defragment the files on your disks to make them quicker to access.

FPR This is a printing program written in C. It's not compiled – you can change it to meet your needs. Requires a C compiler.

THRILL There is little to say about this program. It's a beautiful example of high resolution PC graphics, and was too good to ignore, even if it was wholly useless. It's also a bit naughty.

MIDI-IO This is the source file for the interrupt driven MIDI communication module from the April 1987 edition of Computing Now! Requires MASM to assemble and a language compiler to use – preferably C.

PC-WRITE The latest version of this phenomenal word processor, this thing is enough to turn you off any other word processing package on the planet. Even if you only write ribald limericks in pig latin once every four years, you owe it to yourself to try PC-Write.

EDWIN This is a decent windowing program editor written in Turbo Pascal. It's not terribly fancy, but it's fast and very much like WordStar.

$29.95 (2 disk set)

VOLUME 24

AC This is a small area code program – give it a three digit area code and it will tell you where it is.

ASC This is a memory resident utility that pops up a window with an ASCII character chart.

ATTR This utility lets you meddle with the attribute bit of your files.

BAC This is a disk backup utility that is much less frightening than the one that comes with DOS.

BACKSCRL This recalls stuff that has scrolled of your screen. It's neat if you can't seem to reach the NumLock key in time.

CAT This is a collection of disk utilities in one program.

CLOCK One of the nicest clocks we've seen, this has a built in alarm function among other things.

COVER This is a sorted disk directory that prints out all the files on a floppy in a form suitable for sticking to the sleeve.

CWEEP This is a menu driven file mover – saves typing the word COPY over and over again.

DDIR Yet another directory utility, this does a two column directory similar to the regular single column DOS version.

DELZ This wipes out files so they can never come back – kills the sectors as well as the directory entry.

DISKCAN This one checks your disks for bad sectors – get 'em before they get you.

DOORS This lets you flip between multiple monitors without rebooting your system.

EQUIP This program tells you what hardware you system thinks it has – very often providing you with the answer to all sorts of software problems.

FASTDISK If your floppies seem a bit tedious, you might want to zap 'em with this speed up program.

FDATE This changes the date stamps of files.

FLIP This one sets a number of otherwise tedious parameters under DOS.

FREE This returns the amount of free space on a disk without having to watch the whole directory scroll by.

GERM This is a memory resident interrupt driven communications terminal.

IBMSHELL This allows you to

See Order Form on Page 13

World Radio History

fool your system into loading COMMAND.COM from other places.

KBBUFF This is a keyboard buffer extender. No home should be without one.

KEYFAKE This allows you to "stuff" keyboard characters into an application to get past tedious introductory screens and menus.

LC This counts the number of lines in a text file.

LOCATE This scans through subdirectories, checking all the files for specific text strings.

LOCK This is a file encryptor. Also includes UNLOCK.

MOVE This moves files between subdirectories with less typing than COPY would entail.

NDOSEDIT An updated version of regular DOSEDIT, this is a resident DOS command line editor that actually makes DOS decent ot work with. Indispensable.

NO This is a strange little wild card exception thing. It allows you to create more complex file specifications than does DOS all by itself.

NPAD This is a simple memory resident node pad.

PCUTIL This is a collection of add ons to DOS.

PINHEAD This is the tiny printing press program from the June 1987 edition of Computing Now! It can get up to 16 kilobytes of text on a single page. Includes the C source code. — works on an Epson compatible printer.

POPCAL This is a memory resident utility which will bring up any month of any year you like.

PR This is a handy formatted printing utility.

PUSHDIR Primarily used in batch files, this allows you to change subdirectories, do something and then return to the previous directory.

REBEEP A replacement for PAUSE, this is a noisy batch file utility to attract attention when a task has been completed.

RENDIR This renames subdirectories.

SCRN This is a screen saver — it blanks all the monitors attached to your system after a specified period of inactivity to keep your phosphor from getting fried.

SETPRN This allows you to painlessly set up your printer from DOS.

SETUP This is a memory resident utility that will allow you to set up an Epson compatible printer from within any application.

SIZE This returns the number of allocation clusters a file occupies on the disk.

SOUND This makes weird noises to attract attention from within a batch file.

SP This is a really nice little print spooler.

SWEEP This allows you to execute a 4command in every subdirectory on you r disk.

UNDEL This recovers accidentally deleted files. You man not need it now but you sure will sooner or later.

VDL This requests verification before it deletes files so you won't need UNDEL quite as often.

VOLSER Changes the volume name of a disk.

WAITN This pauses for a specified time while executing a batch file.

WHEREIS This finds files in subdirectories. It includes the C source code from the june 1987 edition of Computing Now!

XDEL This is a menu-driven file deletion utility.

$19.95

VOLUME 25

VMAC4 this little program allows PC users with Hercules compatible cards — or ATI multiple monitor boards — to look at MacPaint pictures. The Herc card has a more usable aspect ration than the colour card, and the images look pretty slick. Among other things, there are an awful lot of naked ladies living in MacPaint files.

PINBALL3 The weirdest pinball game we've encountered thus far, this thing will zap your brain if you play it late at night. It's mildly damaging the rest of the time.

MAXHEAD This is a MacPaint picture of Max Headroom for VMAC4, above. There are several more — rather more exotic — pictures on Volume 24, which will also work with VMAC4. Likewise, this file will work with the MAcShow colour card program on the disk, which can be used to convert it for use in other PC graphic software.

SPKR A device driver, this little beast allows you to make the PC's speaker play music in a very elegant, program independent way. It's suitable for use with BASIC, C, Turbo Pascal, assembler and even just from DOS.

RESQ You probably won't need RESQ until something nasty happens to your computer, but then you'll be very pleased that it's about. This thing can recover erased files and, more important, it can find text that you've lost in memory due to a software crash and get it back into a file. It's indispensable.

IT The "Ideal Terminal" is a telecommunications terminal package which, among other things, emulates several professional mainframe style hardware terminals. It also handles XMODEM and KERMIT file transfers, making it a much less freaky replacement for the likes of QMODEM and CrossTalk.

RIGHT HAND MAN This is a sort of enhanced public domain SideKick. It provides one with all sorts of pop-up utilities from within other programs, including an ASCII table, a really powerful calculator, a DOS shell and several note pads. It also handles keyboard macros. A clever overlay system allows it to keep its memory down to a manageable hugeness.

SLOWDOWN A lot of software — mostly games — which has been written to run normally on a PC switches into maximum overdrive on an AT or even a fast PC. This usually makes it useless. The slowdown program allows you to bring the speed of such a machine back down to sublight levels for these occasions.

$19.95

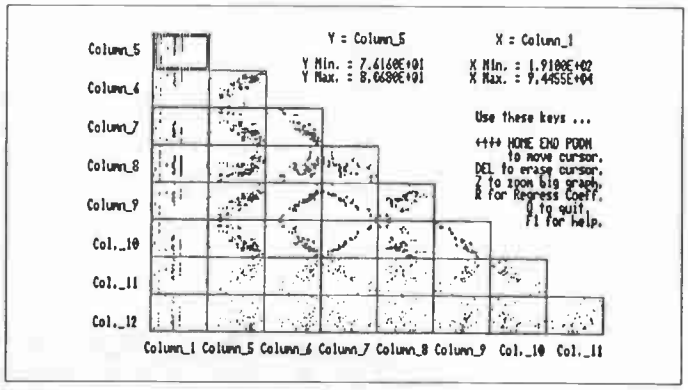

VOLUME 26

AWS Programs that turn WordStar into ASCII abound, but this one turns ASCII back into WordStar. Let those high bits roll.

BADCLUST This program finds the bad clusters on cheap disks, preventing them from killing your data. If you must use low rent oxide, use it carefully.

CHEAPFMT Like BADCLUST, above, this program makes your life less freaky if you use cheap disks. It formats them very carefully, looking for unusable sectors.

CCC A C language programmer's dream, this is a "pretty print" program, that actually draws nesting loop and structure diagrams beside the source code it lists. It makes spotting even subtle bugs effortless.

CTP Something of a mutated fusion between snake and space invaders, this is a ruthlessly fast arcade game in first rate high resolution graphics. Requires a colour card or HGC, below, and a Herc board.

HGC This is the first colour card simulator for a Hercules board that really seems to have its act together for the majority of colour card graphics software. Run it and your Herc card will display colour card high resolution graphics as if it was designed for the task.

BIGPRINT This program prints text files in very large characters. It requires an Epson compatible printer.

MBS This is one of the nicer fractal programs we've encountered, as well as being one of the faster ones. It runs on a colour card, or on a Herc board with HGC, above.

MOUSE This is the source code for the linkable MOUSE driver, as seen in the July 1987 edition of Computing Now! It requires MASM to assemble and a C compiler to use.

PCRR This is one of the most interesting programs we've yet encountered. It simulates a railroad in high resolution graphics. You can lay out your railroad, equip it with multiple trains and make the whole party go. It's good for hours of fun and there's no track to buy. Requires a colour card or HGC, above and a Hercules board.

TASKER This is the most elaborate multitasking system yet devised for the PC. Install up to nine variable sized partitions, with a program running in each, and pop between them instantly.

WINDOW This is the source code for the C language window manager from the July 1987 edition of Computing Now! Written in Lattice C.

$19.95

VOLUME 27

DECEIVE This is a resident program to be used if your boss likes to creep up behind you when you're supposed to be working. At the touch of a key your PacMan screen can be replaced by WordStar, Lotus or any other serious application until the powers that be are satisfied and play can resume.

DPATH Allows the opening and creating of files to be handled with a path, just as the running of programs

World Radio History

is under DOS with the PATH command. This is the gift of the gods to programs that can't find their overlays and configuration files.

HXC A sophisticated hexidecimal calculator, this program will keep you from damaging your hands by trying to glue on four extra fingers.

IOMON This is a resident utility which monitors the disk I/O of your system and lets you see what the drives are doing. It's great for spotting the causes of system errors.

TREECOPY This is the best... and fastest... tree copy utility we've encountered to date. It will copy an entire subdirectory and all of its included subsubdirectories into another tree.

TREEDEL This program will wipe out a whole subdirectory and any subdirecties in it with one command. Mass slaughter... what fun!

TREESIZE This program will tell you how much space is occupied by the aggregate contents of a subdirectory.

VRAM This is an amazing bit of work for people with programs that want to see a Lotus-Intel Above-Board memory card... if they lack one. It allows up to eight megabytes of hard drive space to pretent to be extended memory... sort of a RAM drive in reverse. Great for Lotus users with big sheets to spread.

LQPRINT If you've ever wanted to print attractive documents without having to pop for an expensive fancy printing package, this thing was written for you. It does all the special effects you can imagine, runs under just about anything and supports all sorts of dot matrix printers. It includes a wide selection of very well done fonts.

ZANSI Another replacement for ANSI.SYS, this one increases your console printing speed by almost fifty percent without sacrificing any of the commonly used ANSI.SYS functions.

CYLON This makes your cursor go strange... deliberately. It's useless but it's very small. Requires an EGA card.

EGAROIDS The best asteroids game ever written for the PC... when those rocks come at you start praying to the cosmic gods. Requires an EGA card.

KC-PAL An EGA pallete editor and librarian. Comes with lots of support utilities and toys. Not surprisingly, it requires an EGA card.

NEWFONT Replace the austere, depressingly corporate IBM font of your PC with damn near anything you can think of. Several fonts are included. The screen interface is seamless, and the results can be extremely pleasing. Requires an EGA card.

$19.95

VOLUME 28

ASTROLAB This is a very sophisticated program for working our the conjunction of the planets for any day in history. It's not much use if you believe in a flat earth, but handy for horoscopes

BASERES Yet another resident utility, this thing will accept numbers in any base and show them to you in all the other commonly used notations. In other words, it will convert decimal to hex and back again—great for people with only ten fingers.

BREAKON This is a utility to make just about any program exitable with control-break. It has multiple levels of urgency—three hits gets you out of anything short of the end of civilization as we know it. Assembler source included.

CROSSWRD If you've ever wanted to generate your own crossword puzzles, this is the code for you. Fill it full of works and it finds places for them—keeps track of the clues,too.

DIMMER The smallest screen blanker yet—two hundred and seventy one bytes.

EPSONISM Even people with laser printers occasionally have to deal with plebes. This program is a DOS filter to make a PostScript printer behave like an Epson.

FASTBIOS This is a pair of programs which will extend your keyboard buffer—without hanging your system—and increase the speed of your screen dramatically. When was the last time you had a little drama in your computer?

FREERAM This will tell you the truth about how much useable memory is available to your programs. A painful thing, the truth...

LASERGRID This is an ASCII

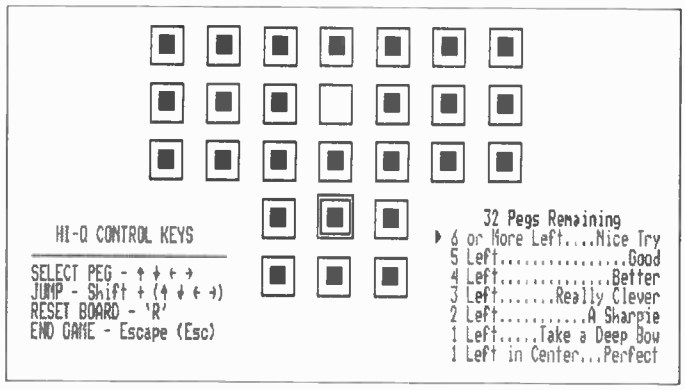

game, but a rather good one. Place your bets and hope the aliens leave you alone.

VMUSIC This is a small three voice music player which handles its scores in BASIC music notation. Comes with several songs, and you can easily create your own tunes with a text editor.

IDCKEYS This is an assembly language program to set up the function key redefinitions under ANSI.SYS. It's great if you like to have keyboard macros under DOS without a keyboard redefinition program installed. Requires an assembler to use.

IDCKILL This will go through an entire hard drive—including all your subdirectories—and kill files that match a given specification. A bit nasty if you use it improperly, but great, say, for snuffing BAK files.

LW86 This is an extensive pop up reference card for assembly language programmers. It includes explanations of the op codes, what the assembler directives do and so on, all at the touch of control shift.

SPACE Find out how much useable space is on your hard drive instantly. Includes assembly language source.

YESNO A really useful thing to

Hard Disk Survival Kit

Especially for new PC owners

A DOS manual is a fearsome thing... and even that is small compared to some of the things you could do with your computer. If you have a hard drive you can have all sorts of powerful, useful utilities and programs installed in your system to make your use of it more efficient and productive. Getting this together, if you're now to all this technological stuff, is difficult at best. Rather than have to plow your way through disks of software that you don't understand, you might want to consider our hard drive survival disk. We've created it to let you jump start your computer and get it set up with the best public domain utilities and enhancements... all without having to sweat over tricky installation procedures. Set up your hard drive as per the instructions which came with your computer, pop in our disk and a comprehensive, user friendly menu will install any of a whole host of useful programs in your system. There's nothing to copy, format, make, remake, link, transfer or edit. If you can find your keyboard this disk will work for you. Here's what the disk includes... we've selected these programs with new PC users in mind. Please note that these programs are included in our other almost free software disks. Descriptions of them are provided elsewhere in this catalog.

Only $19.95

Programs Included:

HGC	Colour card emulator for Hercules	PCWINDOW	Resident grab bag
ADDRESS	Resident envelope addresser	PINPRESS	Prints things very small
WHEREIS	Hard drive file finder	NOTEPAD	Resident notepad
SIZE	File size finder	FREE	Free space finder
SETUP	Resident Epson printer setup	HOTDOS	Multiple tasker
RENDIR	Sub-directory renamer	BLANK	Screen blanker
POPCAL	Resident perpetual calendar	K9	Another resident grab bag
CLOCK	Screen clock	LAZY	Menu generator
EDWIN	WordStar like editor	UNWS	WordStar converter
NANSI	Screen driver	MORTGAGE	Measure of your indenture
CACHE	Disk cache	LOOK	File viewer
RAMDISK	RAM disk program	PCBW	Colour killer
LPTX	Printer redirection	VTREE	Hard disk map
MURPHY	Foolishness and wisdom	VFILER	File manager
LOCKERUP	Security system	POPCALC	Resident calculator
BOTH	Printer paper saver	DOSEDIT	Command line editor

See Order Form on Page 13

World Radio History

Almost Free PC Software

create complex interactive batch files, this little program returns an error level code basic on the ASCII value of a key press. Assembly source included.

$19.95

VOLUME 29

INSTACALC is a memory resident spreadsheet. It may not be Lotus or Excel, but it's amazingly powerful considering that it lives in an alternate key combination. Includes a sophisticated macro facility.

ALTER allows you to change the attributes of a file... including the time and the date.

CALENDAR is a sophisticated desk calendar which can be made memory resident if you want it to be. It uses data files which allow you to have it remind you of things.

COVER prints disk directories suitable for sticking into the sleeves of your disks... the nicest such program we've encountered. Requires an Epson compatible printer, patchable with DEBUG for other printers.

DISKLITE is a tiny bit of code which shows you when one of your drives is running. Not much use for floppies, this, but great for RAM disks and AT style internal hard drives. Includes a very interesting approach to a source code file.

DISKUTIL is a poor man's Norton utility. It will walk you through simple disk level functions, including FAT table fix ups and file unerasure.

MELT clears the screen... dramatically.

MONSTER a memory resident DOS monitor. Check out what your programs do one INT 21 call at a time.

THEGRIN is the most sophisticated MacPaint picture viewer yet. It allows you to stretch and compress images, zoom in and out and generally hack their bits to bits. It also prints them.

TMAP is a clever TSR program mapper which is itself memory resident. It's superb for finding gorches caused by interacting resident programs.

VARISLOW is a variable speed control for AT type computers. It lets you crank the clock down to play games at their normal speeds. However, you can do it interactively, rather than from a command line.

WATERFALL is a fabulous MacPaint picture of an Escher drawing, suitable for use with THEGRIN or any other MacPaint reader.

CHINASEA is a James Clavell novel in a disk file. In this game you get to be a trader in the far east. Try to prosper without getting knifed.

TURBO C PATCHES is a collection of patches to fix some of the bugs in the early releases of Borland's Turbo C. If you're going to compile at warp speed you'd better have one of these.

VOLUME 30

386BUG Some 80386 chips don't work quite right. They have problems with integer multiplication, which can cause some software to behave unpredictably. This Little program spots the duds... it's essential if you're thinking about buying a 386 machine. Includes source code.

MASM-MAC This is a collection of MASM assembler macros to make BIOS, DOS and 8087 interfacing a lot easier. Requires MASM to use.

8X6 installs a really tiny screen font on an EGA card. You can get about four times the usual amount of text on your screen with this if you run applications which support it.

AT is a little time bomb program. It will hide in memory and run applications at specific times and dates without any attention. Allows for queuing up several tasks.

BACHMIN is a three part Bach minuet in BASIC... quite the trick.

CAT is a small sorted directory program. While hardly high tech, it is a useful replacement for DIR.

CAVERNS is a fast graphic arcade game. It looks a bit simplistic but it will surprise you when you get into it. Wants a CGA card.

CMOS is a pair of simple programs which read the contents of an AT's CMOS memory into a disk file and then restore it. This is great for changing batteries, of course, and also for those systems with funky memory which require frequent setting up.

DIRNOTES allows you to attach short, one line comments to the directory entries on your disks.

PRTSCEGA is unpronounceable, of course. It's a program to make the PrtSc function work properly for EGA cards, allowing you to once again dump screens to your printer.

Ventura ClipArt

If you have begun using the popular Ventura desktop .publishing software package, you'll know how much graphics can dress up your documents. However, unless you have a scanner and a ready source of hard copy clip art at your disposal... or a paint box program and a great deal of time... it's very nearly impossible to find spot illustrations in picture files. At least, it used to be. Almost free Ventura clip art picture collections are disks full of image files. They will work with Ventura 1.1, and we include a utility to make them suitable for use with the original 1.1 release or the patched one. Each disk has a variety of pictures, both for spot illustrations and full page pictures. They're suitable for reproduction on any output device. Volumes one and two of almost free Ventura clip art are available now.

Included in Volume one are pictures entitled: BABY • BELVEDERE • BLUES BROTHERS • BLUENUN • BUGS • CHEETAH • CLIPART • FISHES • GIRLWING • KNOT • KOALA • LETTER A • HEARTS • WOMAN • RELATIVITY • SCAN • ESCHER WATERFALL

Included in Volume two are pictures entitled: AIRCRAFT • BUTTERFLY • CAR LOGOS • COLLECTORS CARS • MORE CLIP ART • CUBE • DANCERS • DRAGON • GLASSES • GREYHOUND • HANDS • MORE KNOTS • LEATHER GODDESS • MINOTAUR • SKELETON • TIGER • ANOTHER WORLD • ZEBRA GIRL

$19.95 Each

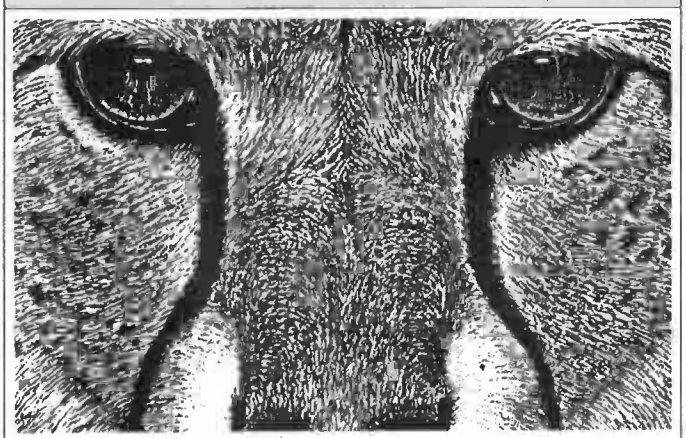

Versions are included for a stock Epson FX-80 and for the Tandy DMP200. In addition, the source code comes with it, so you can hack a driver up for your specific printer.

EDISK allows you to put a RAM disk in the space between your normal system memory and your screen buffer, using this otherwise wasted space for something practical. It requires that you have memory in there, of course... many RAM cards will address this area.

EMC is an extended memory cache. It allows you to use LIM memory for a disk cache, speeding up your disk accesses without robbing your system of any main memory.

GDIR is a sorted directory program with uses the Hercules card's graphics mode to put forty-three lines of listings on the tube at once. It's very slick.

HELP is a slick little DOS help program which can be called up any time you need something about the PC explained to you.

THRASHER is a splendid system to find out the optimum setting for the BUFFERS line in your CONFIG.SYS file. It can speed up your disk accesses while actually freeing up a bit of memory.

MCSCOOP is the executable version of the MacPaint file reader in the January 1988 edition of Computing Now. It also prints picture files... to PostScript, LaserJet + and Epson printers. You probably didn't think you needed another paint viewer... hey, there was a bit of extra space on this disk.

LDRES is a system to make somewhat standard COM files into memory resident utilities, or TSRs. Please note that while full documentation is included with this thing, it's still a bit technical and you'll have to be a moderately decent hacker to make something come of it.

NOREBOOT will disable the Ctrl-Alt-Del reboot of your system. Source code is included.

RES86 is a transliteration of the redoubtable CP/M RESOURCE machine language disassembler. If you want to take apart somebody else's program this is the ultimate tool. Source code is included. This program requires an extensive understanding of machine level programming to be useful.

RS232 will show you the status of your serial port on your screen. It's handy for debugging, and to see what you're modem is up to if you have one that lives inside your PC.

WFU is one of the nicest DOS shell managers we've yet encountered. It handles tagging, copying, deleting, renaming and generally manipulating files just as you would with the command line... but it does so in a convenient, menu driven environment.

$19.95

World Radio History

SuperDisks for the PC

SuperDisk 1

EBL This is the latest version of the Extended Batch Language, an easy-to-use program that lets you customize hard disk and floppy disk systems for less experienced users. Create custom menus and make your system idiot-proof – without the need for a complicated DOS shell program.

TIRED You may want to save this one for April 1st. Sneak it into a friend's BATCH file, or run it from DOS (while your friend is at the coffee urn). Spectacular, but harmless results.

BREAKON Ever need to exit from a program in a hurry? Or do you get frustrated when your computer hangs up because of a software problem. You could press the RESET button, or try running BREAKON. This little beauty works with many popular programs.

PKARC If you want to keep archive copies of important, but rarely needed data files or programs, an archiving program is an inexpensive alternative to buying more floppy disks. Archive files with PKARC and extract them with PKXARC. These utilities are fast and accurate – and they'll help you save on disks.

DSIZ DSIZ is a simple utility that will provide information on the size of the various directories on a hard disk system.

CONVER An-easy-to-use unit conversion utility. This provides imperial, metric and U.S. conversions for all common units of measurement – and many uncommon ones as well. Provides well over 200 conversions.

CUTE TIME Friendlier than a clock program, but not as accurate, running QT gives on an English approximation of the time. "It's about half past two", for example.

DRAIN Another April Fool's program. Run DRAIN to remove the water from your disk drive. Keep 'em rolling in the aisles.

XEQ This utility is designed to let you manage those small but useful programs that tend to clutter up disks. Files can be added, removed and run from XEQ.

ORDER Use ORDER to change the order in which files appear in the directory on your disks. This utility will create order out of chaos in large directories. Great for hard disks.

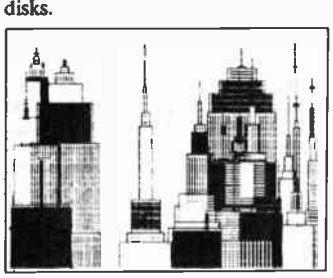

TSR For SideKick, ProKey and SuperKey users – or anyone who uses co-resident software. This utility lets you remove co-resident programs (such as those mentioned above) from memory – without rebooting your computer! You'll wonder how you ever managed without it.

$19.95

SuperDisk 2

BLOCKADE Play with up to two human and five computer players. This territorial game will generate hours of excitement. This version lets you select a number of game parameters such as strategy and speed. Win by blocking the paths of your opponents in order to gain territory.

DALEKS A game of skill and logic based on the Dr. Who television series. Use your talents to rid the universe of the dreaded Daleks.

RLOGIC Save the world from nuclear annihilation. This one is trickier than you might expect.

CAVERNS OF GINK A strange name for a strange game. Explore the Caverns and see what you'll find.

LETFALL A great way to learn touch typing and to have fun too. This one lets you work on tricky key combinations – and it will report on your progress.

WIMPS Maneuver your spaceship and blast away at the marauding wimps. A great zero gravity simulation.

FLIGHTMARE As an Omegan jet fighter ace, your job is to protect Omegan factories from hordes of dessert vandals.

PYRAMID Hop on each triangle in the pyramid and score points, but watch out for the snakes!

HI Just run Hi from DOS or from within a BATCH file and be prepared for a daily dose of inspired wit and wisdom. From Confucius to Murphy, this program has it all.

$19.95

SuperDisk 3

DSCAR This is the "dBase Source Code Analyzer and Reporter", a utility that lets you pretty up and document your dBase programs. This program is very flexible in how it analyzes your files. You can even edit the reserved word list so that it will work with future updates of dBase III as well as with dBase compilers such as Nantucket's Clipper.

SET COLOUR A simple, but well written routine that can be called from within any dBase program. This one lets you install screen colours.

DB-CHECK Check the logical flow of your dBase programs and have this handy utility indent your programs so that they are more easily read – and debugged. This one is very fast!

FLOW A quick program flow checker that matches up DO's and ENDDO's, IF's and ENDIF's and DO CASE's and ENDCASE's. It makes those hard to find errors easy to find.

DB3TOPAS Not your everyday utility, DB3TOPAS creates Turbo Pascal routines that can access dBase III files.

LBARGEN This is a simple dBase III Light Bar menu generator. Just enter the options for your application and LBARGEN will generate a .PRG file, saving you the time and energy required to do it yourself.

DL1B This is a shareware Clipper library which can be linked with any Clipper program. There are all sorts of great routines in this library – everything from screen handling functions to financial formulae and a phone dialer for modem users. A powerful addition for all dBase/Clipper programmers.

BEEPER Another Clipper utility. Assemble with MASM and link BEEPER with any Clipper program and you'll gain control over the PC's speaker. Alter pitch and duration and add sound to your programs.

HELP There are many good books on how to use dBASE III, but these 7 text files provide dozens of "power user" tips that are often overlooked. These files contain a host of information on using dBase with Lotus 123, backing up large data files, printing, indexing and generating labels. Just use the DOS TYPE command or any ASCII word processor to read these files.

$19.95

SuperDisk 4

TREND is an easy-to-use program that lets you make projections based on past historical data which the use enters. The program can display both line and bar-graphs.

EE2 is a handy "Environment Editor" that lets you make quick changes to DOS PATH and SET commands. The few simple commands needed to run this utility are explained in a small help screen. Requires DOS 3.1 or higher.

PCSTYLE A public domain program which tests your prose and provides a quick test for readability. While not a substitute for a competent English teacher, PCSTYLE can help you improve your writing style by providing statistics on word length, sentence length, percentage of action verbs, etc.

PLANIT is an interesting appointment reminder program. By keeping all of your important dates in a text file (created with your word processor), PLANIT will check the file and tell you if you have any important engagements. A host of options enable you set up messages which repeat weekly, monthly and yearly. It can even warn you of important dates before they arrive!

CPU2 is a speed checker/benchmark program. It measures the speed of your IBM PC compatible system against a standard IBM XT configuration. The assembly language source code is included, in case you want to see how it is done.

EXPENDIT is good expenditure tracking program. Designed primarily for personal use, EXPENDIT lets you set up various categories for your monthly expenses to help you see where all the money goes. A variety of printed reports can also be generated.

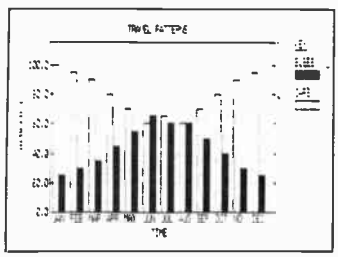

MAKEREAD is a simple, and somewhat strange utility that converts text files into programs. When one of these programs is run, it prints the text contained in it on your screen. An odd program, but it could be useful for generating help short messages for inexperienced users.

REMINDER is a good on-screen clock/reminder utility. Press ALT-R to see the time. You can also enter daily appointments and REMINDER will chime when the time is at hand.

FORTUNE is a complete text simulation of one of TV's most popular game shows. All that's missing is Vanna and the commercials.

FIRE is a great little game which simulates a forest fire. You devise complex strategies using water bombers, etc. in order to quench the flames.

BLORTII is a fast-paced colour graphics game. You have to be quick with this one!

$19.95

SuperDisk 5

DR.COM Need to look at a file, or copy it - fast! Call the DR! DR.COM is a small assembly language program that lets you quickly call up the files in a directory. You can display files in order by name, date or size. Files can be viewed, copied, renamed, or deleted with a little help from the DR.

SIMCGA is the newest version of an indispensable utility for users

See Order Form on Page 13

World Radio History

Order Form

DISK OF THE MONTH

Don't ever miss a disk! Join our PC Disk of the Month Club and you will receive a new Almost Free PC Disk every month! Pay only for the disks you wish to keep. Just select the last item on the Order Form, complete the form and mail it to us. You will be billed for one new disk ($19.95 per disk or up to $30 for 2-disk sets) each month. Each disk will be charged to your credit card. You can cancel at any time or return any disk you do not wish to keep for a full refund. Try it!

CUSTOMER POLICY

- Moorshead Publications warrants that the software will be readable. We will replace defective disks at no cost. Replacement will be made upon the return of a defective diskette.
- Payment must be made before shipment.
- While every effort has been made to ensure that these programs are debugged, we can not assist you in adapting them for your applications.

FINE PRINT

Unless otherwise stated, all software listed in this catalogue and distributed by Moorshead Publications has been obtained through public access bulletin boards, and is believed to be in the public domain. A number of programs distributed on these disks are classed as "freeware" and contain requests for registration fees. Payment of such fees is entirely optional, but users who do register may be eligible to receive program enhancements and technical support from the program's author.

All software distributed through this catalogue is offered free of charge. Prices listed for these disks serve only to defray the costs of diskette duplication, materials, and collecting and testing the software.

Moorshead Publications is proud to be able to offer these outstanding programs. By making Public Domain Software more widely available, it is hoped that the both programmers and the public will benefit.

Order Today!

Send to:
Moorshead Publications
1300 Don Mills Road,
North York, Ontario M3B 3M8
Phone (416) 445-5600
FAX orders (416) 445-8149

Name _____
Company _____
Address _____
City/Town _____
Province _____ Postal Code _____
Telephone _____
Subscriber? CN!_____ ET&T_____ CIE _____

PC/MS-DOS	Price	Qty	Amount
Almost Free PC Volume 1	$19.95		
Almost Free PC Volume 2	$19.95		
Almost Free PC Volume 3	$19.95		
Almost Free PC Volume 4	$19.95		
Almost Free PC Volume 5	$19.95		
Almost Free PC Volume 6	$24.95		
Almost Free PC Volume 7	$19.95		
Almost Free PC Volume 8	$24.95		
Almost Free PC Volume 9	$19.95		
Almost Free PC Volume 10	$19.95		
Almost Free PC Volume 11	$19.95		
Almost Free PC Volume 12	$19.95		
Almost Free PC Volume 14	$19.95		
Almost Free PC Volume 15	$19.95		
Almost Free PC Volume 16	$19.95		
Almost Free PC Volume 17	$19.95		
Almost Free PC Volume 18	$19.95		
Almost Free PC Volume 19	$19.95		
Almost Free PC Volume 20	$19.95		
Almost Free PC Volume 21	$19.95		
Almost Free PC Volume 22	$19.95		
Almost Free PC Volume 23	$29.95		
Almost Free PC Volume 24	$19.95		
Almost Free PC Volume 25	$19.95		
Almost Free PC Volume 26	$19.95		
Almost Free PC Volume 27	$19.95		
Almost Free PC Volume 28	$19.95		
Almost Free PC Volume 29	$19.95		
Almost Free PC Volume 30	$19.95		
Hard Disk Survival Kit	$19.95		
Ventura ClipArt Volume 1	$19.95		
Ventura ClipArt Volume 2	$19.95		
Almost Free Business Software	$19.95		
SuperDisk Volume 1 (utilities)	$19.95		
SuperDisk Volume 2 (games)	$19.95		
SuperDisk Volume 3 (dBase utilities)	$19.95		
SuperDisk Volume 4 (utilities)	$19.95		
SuperDisk Volume 5 (business)	$19.95		
SuperDisk Volume 6 (games)	$19.95		
SuperDisk Volume 7 (games)	$19.95		
SuperDisk Volume 8 (productivity)	$19.95		
SuperDisk Volume 9 (1-2-3 utilities)	$19.95		

Macintosh			
Almost Free Macintosh Volume 1	$24.95		
Almost Free Macintosh Volume 2	$24.95		
Almost Free Macintosh Volume 3	$24.95		
Almost Free Macintosh Volume 4	$24.95		
Almost Free Macintosh Volume 5	$19.95		
or $29.95 (on 2 x 400K disks.)			

Special Offers			
The Learning Computer	$37.95		
Almost Free DX Voices	$19.95		
Back issue binders	$9.75		
Computing Now Subscriptions (1 yr)	$22.95		
Electronics & Technology Today (1 yr)	$22.95		
Computers in Education (1 year)	$25.00		
PC Disk of the Month Club			

☐Cheque ☐MasterCard
☐Money Order ☐Visa
☐American Express
Card Number _____
Expiry Date _____
Signature _____

Subtotal	
7% Tax (Ontario Residents)	
Postage & Handling $1.50	
Grand Total	

World Radio History

SuperDisks for the PC

with Hercules-type graphics cards. This one lets you flip back and forth between Hercules and Colour Graphics programs with two tiny utilities which can be run from DOS or Batch files. Yes, you can run CGA games with your Hercules card!

DATASCAN is a shareware program which is designed to give scientists, statisticians and business users a quick overview of the relationships between the variables in their data. When you load a data file, DATASCAN plots an array of small scatter-graphs, showing the various relationships of up to nine variables. The user can "zoom in" on any graph for more detailed information. You can extract a variety of statistical information such as correlation coefficients, and plot linear regression lines. DATASCAN is not intended to replace any of the more powerful statistical programs such as SAS, but it is powerful enough to enable you to detect statistical correlations within your data. This will pace the way for more indepth study. Requires a Colour Graphics Display. DATASCAN also works with EGA displays and Hercules compatible graphics cards using the SIMCGA utility included on this disk. Graphs can be printed on most dot-matrix printers if GRAPHICS.COM or replace graphics driver has been loaded. DATASCAN works with Lotus 1-2-3 .PRN files, or you can enter data directly.

ZENCALC is a small but powerful spreadsheet program which performs many of the mathematical operations available with commercial spreadsheets. Extensive on-line help is available by pressing the "?" key. ZENCALC is perfect for fast number-crunching.

PC-FLOW Flowcharting as a planning tool is often under used, simply because the use of templates can be very tedious. PC-FLOW is a flow chart designing program which makes flow-charting easy and fast. PC-FLOW lets you manipulate a variety of symbols and lines using either a mouse or the keyboard. Requires a color graphics card. A special file has been included that will let you PC-FLOW with a Mouse Systems Mouse.

19.95

SuperDisk 6

YAHTZEE This is a great implementation of a classic game. Pit your wits against several other players, including the computer. Keeps track of high scores and has a good on-line help screen.

MAROONED – High adventure in space. Your ship has crashed on an alien planet and you must escape.

BLACKJACK – Lots of excitement and nothing to lose, this game plays a strong, but honest hand. Learn the strategy behind this diversion.

MAYAKDM2 is an enlightening text (with ASCII graphics) adventure game. You need a creative soul and a searching intelligence to escape the materialistic – and deadly – Mayan Kingdom. But greater and more meaningful pleasures can be yours if you can cross the ocean to freedom.

3DTICTAC Just like the name says, this is a 3- dimensional Tic-Tac-Toe game. And a mean game it is too! Just you and your computer in an all out battle of wits.

ICBM Save a city from nuclear annihilation. Blast those ICBM's before they blast you. Requires a colour graphics (CGA) card or equivalent.

CRSWRD is nice little program which lets you create your own crossword puzzles. It lets you enter words and clues, edit them, save them – and print them.

ROBOT is a clever game of strategy in which you maneuver a small creature around the computer screen. A number of robots will try to attack you. If the converge on you, the game ends. With careful maneuvering, you can cause the robots to destroy each other. There is also a teleport key – just to add a little more excitement.

19.95

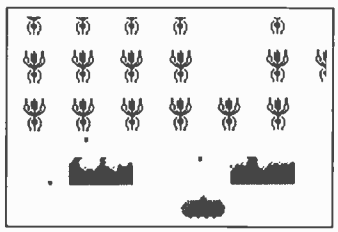

SuperDisk 7

ASTRO is a great astronomy simulation program which graphically demonstrates planetary motion around the sun. It will also perform a number of calculations such as lunar phases, sunrise and sunset times. Requires an EGA display.

TOFHANOI This is a nice implementation of a classic logic problem. The object of the game is simple - move a tower of disks from one platform to another. But you can't place larger disks on top of smaller disks. Requires an EGA display and a logical mind.

TICK is a classic Space Invaders-type game - with a frightening twist. Maneuver a tank at the bottom of your screen and try to eliminate the giant bugs that are trying to get you. Just to keep things interesting, you can also take aim at the occasional rat. Requires a CGA display and fast reflexes.

SOPWITH2 lets you battle the Red Baron in a vintage World War I airplane. The program has realistic flight simulation - it will even stall and crash if you fly too high or too slowly. Requires a CGA display.

GOMOKU is an easy game to play, but a difficult game to win. Enter coordinates from the keyboard to place an Xs on the screen and try to place 5 Xs in a row. The computer will try to stop you - and you must use your brains to keep the computer from winning.

FOOTBALL is an nice NFL football simulation. It is very complete, allows you to choose any two teams you like and even includes details such as a coin toss to see which side kicks off first. Choose each play from a huge "play book" and "make one for the Gipper".

HIQ is brilliant computerized version of a classic peg-jumping game. On a cross-shaped board you try to eliminate all of the "checker pieces" by jumping over them. The object is to clear all but one piece from the board. No special hardware requirements.

KILLER is a well-executed graphics-based game that lets you shoot down the "killer bees". You have to be fast on the draw to win this one. Requires a CGA display.

$19.95

SuperDisk 8

HAVE is a nice little system information utility that will provide you with information such as the number of installed serial ports, parallel ports, type of graphics adapter, number of floppy and hard drives and amount of memory. HAVE even draws a picture of your computer with extended ASCII characters, complete with printer, monitor and keyboard. Its a nice touch.

HANDLES is a small utility that shows you how many files DOS will allow open at the same time. The assembly source code is included to in case you want to see how it is run.

WCD is a nice little program that calculates flying times between world cities. Select any two international airports and you get a display showing their longitudes and latitudes and an estimated flying time. Distances in Miles and Kilometres are also shown. Handy for frequent flyers.

HLPURSLF is a resident help screen system. A series of HLP and MNU files are included to help you set up your own custom Help system. A great way to help new users learn about their computers.

UNIX has absolutely nothing to do with the operating system of the same name. This UNIX is a fast and furious pinball game. It does a great simulation of the real thing. Saves on quarters too.

VDE is a small full-screen text editor that could make a great programming editor. It's also good for "quick and dirty" text editing for BATCH files, etc. It only needs 11K of RAM, but it still boasts WordStar compatible commands and comes with an installation program to it can be customized for your own needs.

EP is a PATH editor which lets you quickly add or remove paths from your PATH statement. Small and fast, EP's program screen incorporates a 'complete list of editing commands to make altering you PATH statement quick and easy.

TAO is, well TAO just is, that's all. Based on the TAO of Programming, this program displays a random gem of wisdom from the Master Programmer every time you run it. More food for your AUTOEXEC file.

$19.95

SuperDisk 9

TAX87ONT is a comprehensive Lotus worksheet (version 1.X) for Ontario tax returns (unfortunately, we could not locate a similar worksheet for other provinces). TAX87ONT is an elegant worksheet which even includes all tax schedules. A split screen window lets you see whether you owe tax or vice versa. It's simple and easy to use.

BANKRUPT is a good worksheet for investors and potential investors. It lets you calculate the likelihood of a publicly traded corporation going bankrupt using "The Bankruptcy Predictor Formula", a formula was devised by Edward I. Altman, a financial economist at New York University's Graduate School of Business.

LOTUSX is proof that computers have been taken over by practical jokers. Run LOTUSX and an innocent looking worksheet is displayed. Press any key and the worksheet will actually "crumble" before your eyes! Slip it into a colleagues AUTOEXEC.BAT file.

HANGMAN is a competent version of the Hangman word guessing game written as a 1-2-3 worksheet! It comes complete with simple ASCII graphics.

OIL is a simple worksheet which forecasts oil prices from a number of historical factors.

123LEARN is a menu-driven macro creation worksheet. Using Version 2.00 or higher, you can use 123LEARN to record keystrokes in order to create complex macros.

CHKBKC2 is a personal finance management worksheet which lets you balance monthly income and expenditures. You can customize it to suit your specific needs.

TMPDOOM is a series of mystery adventure games created as a series of 1-2-3 worksheets. Because of the medium, TMPDOOM is not as extensive as most dedicated, commercial adventure games, but it is fun! Solve the mysteries by using your skill with Lotus commands. A great teaching tool.

$19.95

World Radio History

Software for the Macintosh

VOLUME 1

ASTEROIDS This is a splendid implementation of one of the most popular arcade games of all time. The graphics and sound effects are amazing.

RED RYDER Telecommunication on the Mac has never been this easy. RED RYDER includes XMODEM and Kermit protocols and many other features.

BINHEX is a utility for RED RYDER which converts applications files to binary files and back again to allow them to be transferred over phones lines.

LIFE is one of the classic computer programs, and this version is exceedingly well done.

VIEW PAINT Ever wanted to look at a MacPaint drawing without getting into MacPAint. This utility lets you sneak peeks at your drawing files without fussing about.

MacCLONE Many users have found the Mac's disk copy routine to be less than perfect. This is a vast improvement. It even defeats a number of copy protection schemes.

RESOURCE EDITOR Macintosh icons and other resource items just cry out to be personalized. This little tool will help you make your Mac look its best for you.

SCREEN MAKER Moving text from MacWrite to MacPaint can be a bit disappointing... something gets lost in the clipboard. This utility helps your words make the trip unscathed.

FONT EDITOR For those longing to make their own fonts... and for those who just want to adjust the ones they have... this editor lets you shuffle fat bits to your heart's content.

MENU EDITOR A handy utility for editing the words in Macintosh application menus.

$24.95

VOLUME 2

FONT LIBRARIAN A splendid alternative to the Macintosh system font mover, this utility makes it easy to create custom collections of Macintosh fonts.

WIZARD'S FIRE This is a lively game which comes with still more lively games tucked away in the desk accessories. Get the magic rays before they get you!

SWITCHER Multitasking on a Mac? Why not. SWITCHER lets you run up to four applications concurrently on a 512K 'Fat Mac'.

RAMSTART Creates a RAM disk of any size on a fat Mac, and effectively increases the speed of most applications several times over.

MADONNA A MacPaint picture of the popular pop star.

MOCK CHART A desk accessory to handle the creation and printing of small business charts.

DAM A Desk Accessory Manager for setting up the Apple menu on your Macintosh the way you want it.

MOCK TERMINAL A desk accessory for telecommunication functions from within another application.

HP CALC Add a simulated Hewlett-Packard calculator to your Mac.

REdit A slick resource editor. See the December 1985 issue of Computing Now! for an in depth look at this esoteric art form.

ORION This one is worth the price of the disk all by itself. It simulates a star ship cruising around the galaxy at the speed of light. Stars fly past like white lines on the highway ... with or without star names fluttering like celestial flags.

$24.99

VOLUME 3

ICON COLLECTOR is a peculiar program that allows you to locate icons in applications and capture them to disk for use in other programs.

BILLIARD PARLOR is worth the cost of this disk all by itself. It's an excellent simulation of a billiard table. It will play most of the usual variations of pool and billiards, and simulates the movement of the balls with unspeakable realism.

MANDELZOOM is the nicest Macintosh fractal generator we've come across. It's surprisingly fast, considering the nature of the Mac's floating point library.

RED RYDER This is the latest version of this popular communications program. It runs perfectly, giving you a sophisticated terminal with download facilities, macros and dozens of other features.

PACKIT – not to be confused with PackIt will compress and uncompress P2T libraries which have been downloaded from bulletin boards. An essential utility for telecommunications.

BINHEX5 is a file manipulation utility which allows Mac files to be sent over a modem.

EDIT is the most sophisticated text editor available for the Mac. Operating similar to MacWrite, it allows you to edit documents in multiple windows. Ideal for program editing, Edit produces clean text files which can be compiled.

$24.95

VOLUME 4

One of the most interesting aspects of the Macintosh is its ability to use software-based character sets. While there are a number of commercial font packages for the Mac, we feel that this collection of public domain fonts ranks among the best. This disk is filled – to the last byte – with thirty-eight unique fonts. We've selected a variety of body copy and display typefaces, spanning traditional and avant garde designs, along with a number of special purpose sets. Bid fairwell to the placid exterior of Chicago, the mild amusement of Geneva, the unadventurous disposition of Athens and plug your Mac into this typesetter's pipe dream. A powerful font librarian is also included to assist in adding the fonts you want to your system.

$24.95

VOLUME 5

The Apple Macintosh has available for it a whole universe of exciting public domain stuff. Aside from just software there are font files, desk accessories, music files, init resources, paint files and buckets of other things. In this collection we've tried to really overfill a disk with bits. In fact, there is so much software on these disks that it is impossible to describe all of it here. All of this software has been compressed into PIT files to allow us to get more things on the disk, and it fills all but about thirty two kilobytes of a standard eight hundred kilobytes double sided floppy. The PackIt extraction utility is included, and is very easy to use. Software has been tested on an enhanced Mac with one hundred and twenty eight kilobyte ROMs, a megabyte of memory and a Rodime hard drive. Some older Macintosh systems may have trouble with some of these files, particularly the hundred and twenty eight kilobyte "thin" Mac, which will not be able to use some of the software, the INIT resources and a minority of the desk accessories.

APPLICATIONS

AutoBlack a screen blanker INIT resource.

Bounce Me is a bouncing ball demo, a la Amiga.

Brickles Little brick out in style.

Clim An MS-DOS/unix style command line interpreter, replacing the mouse, icons and finder. Includes batch files and lost of commands... good for program development or when you get sick of rodentia.

Cursor Wrap An INIT resource that makes your cursor travel around the back of your screen when you reach an edge.

FaceLift Globally reformat the text in MacWrite files.

Font DA/Mover Install and remove fonts and desk accessories in your System file. Works with all the fonts and accessories in this collection.

Global Search Find files anywhere on a hard drive using the HFS file system.

Jclock This is an INIT resource which puts a clock up in the right corner of your screen.

IconEditis the source code for the Pascal program in the December 1987 edition of Computing Now!.

MicroFinder A very tiny... and fast... Finder replacement. No bells, no whistles, just blinding speed.

RDecompiler Decompile the resources in existing applications down to source code and use them in your own programs. Works on about three quarters of all applications. Great little icon swiper.

Screen Maker Converts a MacPaint file to a StartupScreen to replace the boot message of your Mac. Consider being welcomed by the leather goddess of phobos each morning.

Sequencer Batch processing for the Mac.

Set File Change the attributes of any file on your disks. Includes, type, creator and all the bit flags.

Sampler Try out desk accessories without having to install them. Works with all the desk accessories in this collection.

DESK ACCESSORIES

There are over 14 Desk Accessories included with Volume 5. These include: 3DTTT A three dimensional tic tac toe game; Sleep, a manual screen blanker and tube saver; Camera,a screen capture utility with a timer; Change font; Choose Scrap; ConCode, a big 68000 machine language help screen system. Many more DA's are also included on this disk. Whether you need a VT52 terminal emulator, an Icon maker, or a speaker control utility, you'll probably find it on this disk.

MACPAINT FILES

Pictures include: Aircraft • Blues Brothers • Car Logos • • Escher Waterfall • Leather Goddess of Phobos • Pascale • Cars • The Letter A • Zebra girl (some files contain nude images)

MUSIC FILES

Songs include: Sheep look up • Three part invention in G minor • Allemand • Almost persuaded • Brandenburg concertos three and five • Gigue • Malaguena • March in G • Messiah overture • Minuette • Mozart's clarinet concerto • Perludium • Polonaise • Sinfonia • Study • Amen chorus • plus several studies and inventions of dubious origins. (includes JukeBox music playing software)

$29.95 (2 X 400K disks)

$19.95 (800K disk)

World Radio History

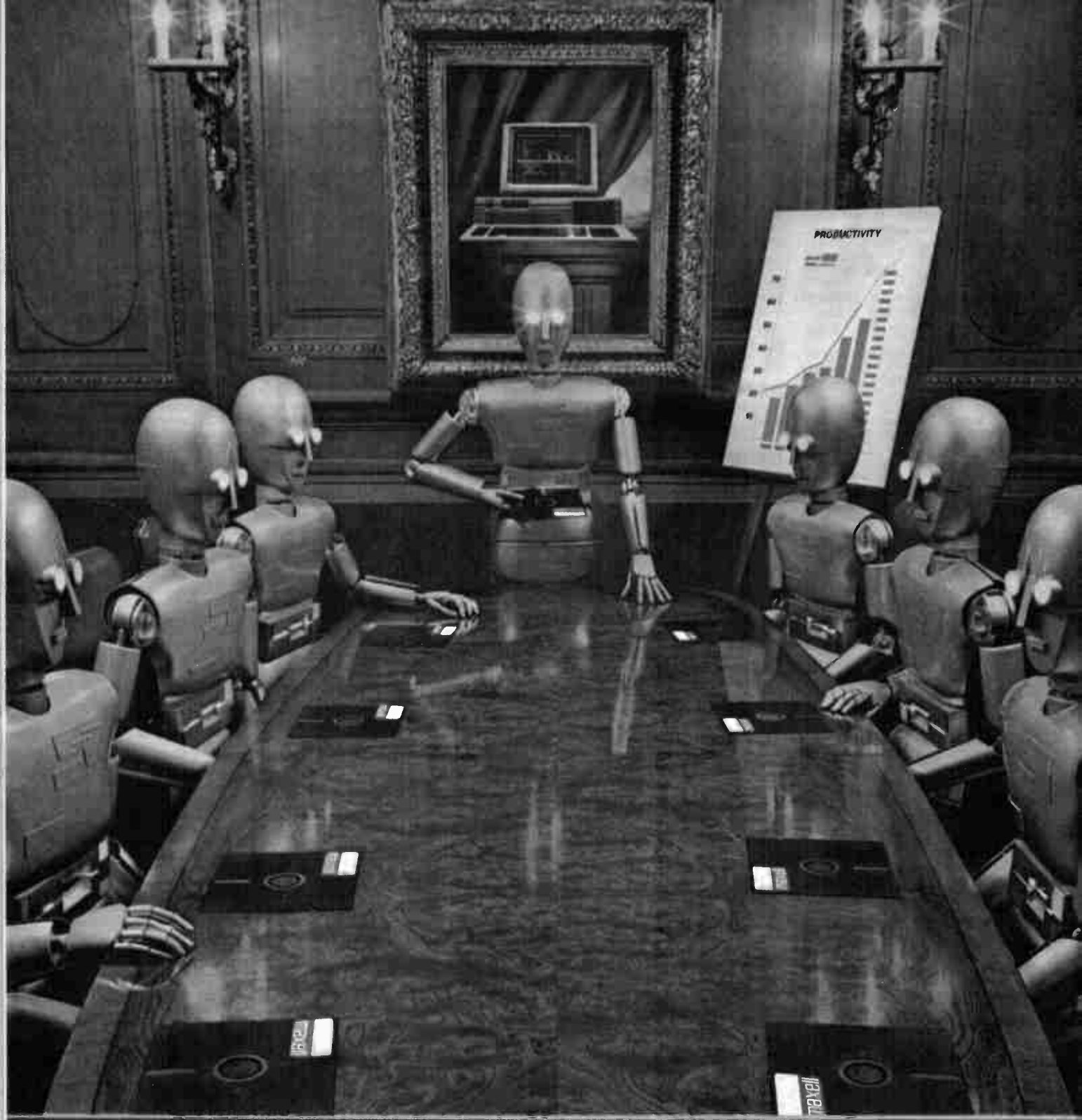

When computers get down to business, they move up to Maxell.

Maxell is ready when you are with the newest technology in magnetic media. A perfect example is this double sided 3½" microdisk.

maxell®
THE GOLD STANDARD

Circle No. 99 on Reader Service Card

Griffco Marketing Inc. Toronto (416) 625-6559, Montreal (514) 382-3183, Vancouver (604) 669-8138

World Radio History

BP32: HOW TO BUILD YOUR OWN METAL & TREASURE LOCATORS **$7.80**

Several fascinating applications with complete electronic and practical details on the simple, and inexpensive construction of Heterodyne Metal Locators.

ELECTRONIC THEORY

BP108: **$7.00**

Cross-references European American and Japanese diode part numbers. Besides rectifier diodes, it includes Zeners, LEDS, Diacs, Triacs, SCRs, OCIs, photodiodes and display diodes.

BP144: FURTHER PRACTICAL ELECTRONICS CALCULATIONS AND FORMULAE **$15.00**

This book covers many aspects of electronics where a knowledge and familiarity of the appropriate formulae is essential for a fuller understandings of the subejct. An essential addition to the library of all those interested in electronics be they amateur, professional or student.

ELEMENTS OF ELECTRONICS - AN ON-GOING SERIES
F.A. WILSON, C.G.I.A., C.ENG.,
BP62: BOOK 1. THE SIMPLE ELECTRONIC CIRCUIT AND COMPONENTS **$11.70**

BP77: BOOK 4 MICROPROCESSING SYSTEMS AND CIRCUITS **$11.80**

Although written especially for readers with no more than ordinary arthmetical skills, the use of mathematics is not avoided, and all the mathematics required is taught as the reader progresses.

Each book is a complete treatise of a particular branch of the subject and therefore, can be used on its own with one proviso, that the later books do not duplicate material from their predecessors, thus a working knowledge of the subjects covered by the earlier books is assumed.

BOOK 1. This book contains all the fundamental theory necessary to lead to a full understanding of the simple electronic circuit and its main components.

BOOK 2. This book continues with alternating current theory without which there can be no comprehension of speech, music, radio, television or even the electricity utilities.

BOOOK 3. Follows on semiconductor technology, leading up to transistors and integrated circuits.

BOOK 4 A complete description of the internal workings of microprocessor.

BOOK5 A book covering the whole communication scene.

PROJECTS

BP180: ELECTONIC CRICUITS FOR THE COMPUTER CONTROL OF MODEL RAILWAYS **$9.00**

The projects in this book consists of various types of controller, including a high quality pulse type, as well as circuits for train position sensing, signal and electronic points control and many more.

BP194:: MODERN OPTO DEVICE PROJECTS **$9.00**

This book provides a number of practical designs for beginners and experienced project builders. These projects utilize a range of modern opto-electric devices, including such things as fibre optics, ultra bright LEDs and passive IR detectors.

BP37: 50 PROJECTS USING RELAYS, SCR's & TRIACS **$7.80**
F.G. RAYER, T.Eng,(CEI),Assoc. IERE

Relays, silicon controlled rectifiers (SCR's) and bi-directional triodes (TRIACs) have a wide range of applications in electronics today. This book gives tried and practical working circuits which should present the minimum of difficulty for the enthusiast to construct. In most of the circuits there is a wide latitude in component values and types, allowing easy modification of circuits or ready adaptation of them to individual needs.

BP71: ELECTRONIC HOUSEHOLD PROJECTS **$7.00**
R.A. PENFOLD

Some of the most useful and popular electronic construction projects are those that can be used in or around the home. The circuits range from such things as '2 Tone Door Buzzer' intercom, through Smoke or Gas Detectors to Baby and Freezer Alarms.

BP90: AUDIO PROJECTS **$7.80**
F.G. RAYER

Covers in detail the construction of a wide range of audio projects. The text has been divided into preamplifiers and mixers, power amplifiers, tone controls and matching and miscellaneous prospects.

BP44: IC 555 PROJECTS **$10.00**
E.A. PARR, B.Sx., C.Eng., M.I.E.E.

Every so often a device appears that is so useful that one wonders how life went on before without it. The 555 timer is such a device included in this book are Basic and General Circuits, Motor Car and Model Railway Circuits, Alarms and Noise Makers as well as a section on the 558, 558 and 559 timers.

BP82: ELECTRONIC PROJECTS USING SOLAR CELLS **$7.80**

A collection of simple circuits which have applications in and around the home using the energy of the sun to power them. The book deals with practical solar power supplies including voltage doubler and tripler circuits, as well as a number of projects.

BP49: POPULAR ELECTRONIC PROJECTS **$10.00**
R.A. PENFOLD

Includes a collection of the most popular types of circuits and projects which, we feel sure, will provide a number of designs to interest most electronics constructors. The projects selected cover a very wide range and are divided into four basic types. Radio Projects, Audio Projects, Household Projects and Test Equipment.

BP94: ELECTRONIC PROJECTS FOR CARS AND BOATS **$7.80**
R.A. PENFOLD

Projects, fifteen in all, which use a 12V supply are the basis of this book. Included are projects on Windscreen Wiper Control, Courtesy Light Delay, Battery Monitor, Cassette Power Supply, Lights Timer, Vehicle Immobiliser, Gas and Smoke Alarm, Depth Warning and Shaver Inverter.

BP95: MODEL RAILWAY PROJECTS **$7.80**

Electronic projects for model railways are fairly recent and have made possible an amazing degree of realism. The projects covered include controllers, signals and sound effects: striboard layouts are provided for each project.

BP93: ELECTRONIC TIMER PROJECTS **$7.80**

Windscreen wiper delay, darkroom timer and metronome projects are included. Some of the more complex circuits are made up from simpler sub-circuits which are dealt with individually.

BP84: DIGITAL IC PROJECTS **$7.80**
F.G. RAYER, T.ENG (CEI), Assoc.IERE

This book contains both simple and more adanced projects and it is hoped that these will be found of help to the reader developing a knowledge of the workings of digital circuits. to help the newcomer to the hobby the author has included a number of board layouts and wiring diagrams. Also the more ambitious projects can be build and tested section by section and this should help avoid or correct faults that could otherwise be troublesome. An ideal book for both beginner and more advanced enthusiast alike.

BP99: MINI - MATRIX BOARD PROJECTS **$7.80**
R.A. PENFOLD

Twenty useful projects which can all be built on a 24 x 10 hole matrix board with copper strips. Includes Doorbuzzer, Low-voltage Alarm, AM Radio, Signal Generator, projector Timer, Guitar Headphone Amp. Transistor Checker and more.

BP103: MULTI-CIRCUIT BOARD PROJECTS **$7.80**
R.A. PENFOLD

This book allows, the reader to build 21 fairly simple electronic projects, all of which may be constructed on the same printed circuit board. Wherever possible, the same components have been used in each design so that with a relatively small number of components and hence low cost, it is possible to make any one of the projects or by re-using the components and P.C.B. all of the projects.

BP107: 30 SOLDERLESS BREAD-BOARD PROJECTS - BOOK 1 **$9.00**
R.A. PENFOLD

A "Solderless Breadboard" is simply a special board on which electronic circuits can be built and tested. The components used are just plugged in and unplugged as desired. The 30 projects featued in this book have been specially deisgned to be built on a 'Verobloc'' breadboard. Wherever possible the components used are common to several projects, hence with only a modest number of reasonably inexpensive components it is possible to build, in turn, every project shown.

BP106: MODERN ON AMP PROJECTS **$7.80**
R.A. PENFOLD

Features a wide range of constructional projects which make use of op-amps including low-noise, low distortion, ultra-high input impedance, high slew-rate and high output current types.

CIRCUITS

BP127:HOW TO DESIGN ELECTRONIC PROJECTS $9.00

Although information on stand circuit blocks is available, there is less information on combining these circuit parts together. This title does just that Practical examples are used and each is analysed to show what each does and how to apply this to other designs.

BP122: AUDIO AMPLIFIER CONSTRUCTION **$6.75**

A wide circuits is given, from low noise microphone and tape head preamps to a 100W MOSFET type. There is also the circuit for 12V bridge amp giving 18W. Circuit board or stripboard layout are included. Most of the circuits are well within the capabilities for even those with limited experience.

BP98: POPULAR ELECTRONIC CIRCUITS, BOOK 2 **$9.00**
R.A. PENFOLD

70 plus circuits based on modern components aimed at those with some experience.

BP179: ELECTRONIC CIRCUITS FOR THE COMPUTER CONTROL OF ROBOTS **$12.00**

The main stumbling block for most would-be robot builders is the electronics to interface the computer to the motors, and the sensors which provide feedback from the robot to the computer. The purpose of this book is to explain and provide some relatively simple electronic circuits which bridge the gap.

BP39: 50 (FET) FIELD EFFECT TRANSISTOR PROJECTS **$7.00**
F.G. RAYER, T.Eng.(CEI),Assoc,IERE

Field effect transistors (FETs), find application in a wide variety of circuits. The projects described here include radio frequency amplifiers and converters, test equipment and receiver aids, tuners, receivers, mixers and tone controls, as well as various miscellaneous devices which are useful in the home.

This book contains something of particular interest for every class of enthusiast - short wave listener, radio amateur, experimenter or audio devotee.

BP88: HOW TO USE OP AMPS **$11.80**
E.A.PARR

A designer's guide covering several op amps, serving as a source book of circuits and a reference book for design calculations. The approach has been made as nonmathematical as possible.

BP65: SINGLE IC PROJECTS **$6.00**
R.A. PENFOLD

There is now a vast range of ICs available to the amateur market, the majority of which are not necessarily designed for use in a single application and can offer unlimited possibilities. All the projects contained in this book are simple to construct and are based on a single IC. A few projects employ one or two transistors in addition to an IC but in most cases the IC is the only active device used.

BP118: PRACTICAL ELECTRONIC BUILDING BLOCKS - BOOK 2 **$7.60**
R.A. PENFOLD

This sequel to BP117 is written to help the reader create and experiment with his own circuits by combining standard type circuit building blocks. Circuits concerned with generating signals were covered in Book 1, this one deals with processing signals. Amplifiers and filters account for most of the book but comparators, Schmitt triggers and other circuits are covered.

BP83: VMOS PROJECTS **$7.80**
R.A. PENFOLD

Although modern bipolar power transistors give excellent results in a wide range of applications, they are not without their drawbacks or limitations. This book will primarily be concerned with VMOS power FETs although power MOSFETs will be dealt with in the chapter on audio circuits. A number of varied and interesting projects are covered under the main headings of: Audio Circuits, sound Generator Circuits, DC Control Circuits and Signal Control Circuits.

ORDER BY TELEPHONE
(416) 445-5600

World Radio History

Question of Balance

A

A fresh look at a frequently misunderstood topic — the use of balanced lines for audio signal connections.

By Barry Porter

It's well known that something called balancing is important in the world of professional audio, but not many people seem to know what the system does or what advantages it brings. If you fall into this category and would like to know a little more, read on.

The individual units of a domestic system, such as a preamplifier and a power amplifier, are usually connected together with a length of screened cable (Fig. 1). Signal is carried along the inner conductor, and the outer screen joins the ground lines of the electronics in the two items of equipment. This type of interconnection is termed 'unbalanced' and works well enough providing the cable is not of excessive length and does not pass near to a strong source of electrical interference. Although the screen layer gives some protection to the signal carrying conductor, a strong external AC field such as that surrounding an AC transformer will pass through the screen and add its unwanted modulation to the signal.

This problem is obviously at its greatest when the cable carries signals at a low level and is followed by lots of amplification. An example is the connection between a microphone and the input channel of a mixing console, where any hum and noise picked up by the cable may be amplified by as much as 60dB.

One way to minimize the effect of external hum and noise is to keep the line impedance as low as possible and the signal level as high as possible. If the sending amplifier has a very low output impedance — less than 1 ohm is possible with operational amplifiers — the connecting cable appears to be at about ground potential, and external fields will exert very little influence.

This principle works well for cable runs of less than 30 metres or so where the external field is not too intense, but when long interconnections are used, the resistance of the signal carrying wire becomes significant and the line impedance increases as you get further from the sending amplifier. In some cases, it is not possible to achieve a near-zero source impedance.

A typical moving coil microphone has an impedance of 200 ohms, and some equipment which has passive attenuation or equalization after the final stage may have an output impedance of several kilohms — ideal circumstances for the introduction of noise whenever connected to a few metres of cable.

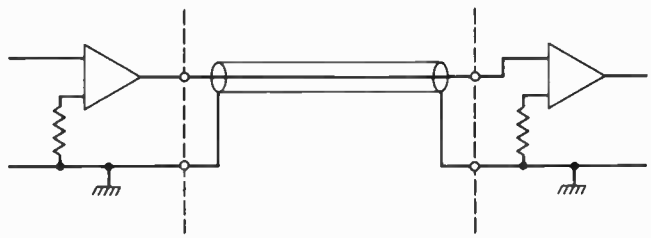

Fig. 1 An unbalanced signal connection, as used on most domestic audio equipment.

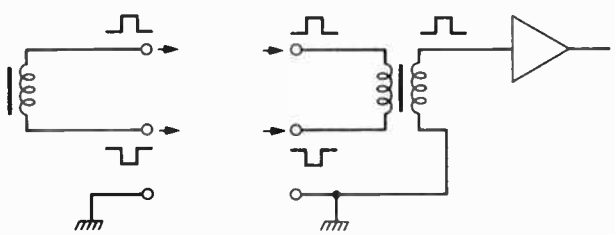

Fig. 2 A balanced output as provided by a moving coil microphone or a transformer.

Fig. 3 A differential (or balanced) input using a transformer.

Yet microphones in particular are often required to be at the far end of several hundred meters of conductor, along which a signal with a level of 1mV or less must travel with as little corruption as possible. Can any thing be done to minimize the pick-up of hum, noise and RF that doesn't require considerable lengths of metal conduit piping? Luckily, it can, and it's called balancing.

The easiest way to understand how balanced connections work is to consider a moving coil microphone. It will consist of a thin foil diaphragm to which is attached a lightweight coil, suspended in a powerful magnetic field. The diaphragm and the coil are vibrated by incoming sound waves, and this

World Radio History

vibration is turned into an electrical current by the action of the magnet. The ends of the coil are connected to the microphone output socket (Fig. 2) where the output signal voltage appears with a phase difference of 180 degrees between the two contacts.

Let's turn to a type of input circuit usually referred to as differential and typified by the transformer arrangement shown in Fig. 3. In order to produce an output voltage, the transformer inputs must receive two signals which are identical in every way except that they must exhibit a 180 degree phase difference – just what the microphone gives out.

If the two outputs of the microphone are now connected to the two transformer inputs, a balanced circuit is created. In practice, the two conductors are enclosed by a screen layer which in the example given would connect the metal case of the microphone to the input amplifier ground. This is shown in Fig. 4 along with the amplification stage which follows the input transformer.

You may wonder what is so different between that and an unbalanced connection. Luckily, there is a big difference. If the cable connecting a balanced output to a balanced input picks up any hum and noise, the unwanted voltages will occur in both conductors at the same level and most importantly, with the same phase. Since a balanced circuit requires a 180 degree phase difference between its two inputs, any signals arriving which are not in anti-phase are cancelled by the differential action of the input. This removes the hum and noise.

The ability of a balanced input to reject unwanted signals is called the Common Mode Rejection Ratio (CMRR for short), and is measured as shown in Fig. 5. CMRR values tend to be frequency conscious, rejection becoming progressively worse with increasing frequency. By careful design, particularly with solid state inputs, a rejection of 80 or 90dB across the audio band may be achieved.

Transformer Or Solid State?

Until recent years, the standard balanced circuit invariably employed transformers for both input and output coupling. By using transformers the signal can be made to pass from the output of one piece of equipment to the input of another without an ground reference, so removing the risk of hum loops. This is particularly important in radio and TV studios, so transformer balancing is almost universal in these environments.

Transformers do suffer from a number of shortcomings. Without becoming too large for comfort, they will only pass a limited signal level before introducing large amounts of very nasty distortion, particularly at low frequencies. They can also suffer from undesirable phase shifts unless carefully designed. High quality transformers are also rather expensive – 'Professional Grade' versions can cost as much as $50-$100.

Although balancing (and unbalancing) transformers are still used in large quantities, for many applications they are being rapidly replaced with solid state input and output stages. A standard operational amplifier has a differential input, and can be connected to a balanced line, as shown in Fig. 6. To obtain the best common mode rejection, the four resistors must all be of the same value, and it is usual to use a variable and fixed resistor in series for R3 to allow the CMRR to be trimmed at low frequencies. The two

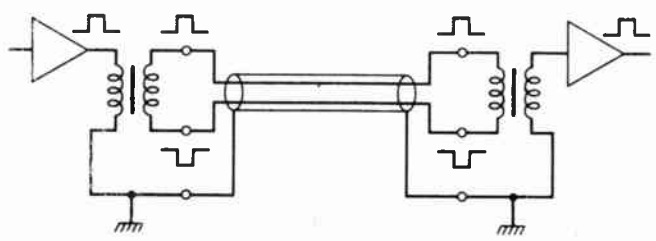

Fig. 4 A balanced interconnection between two pieces of equipment.

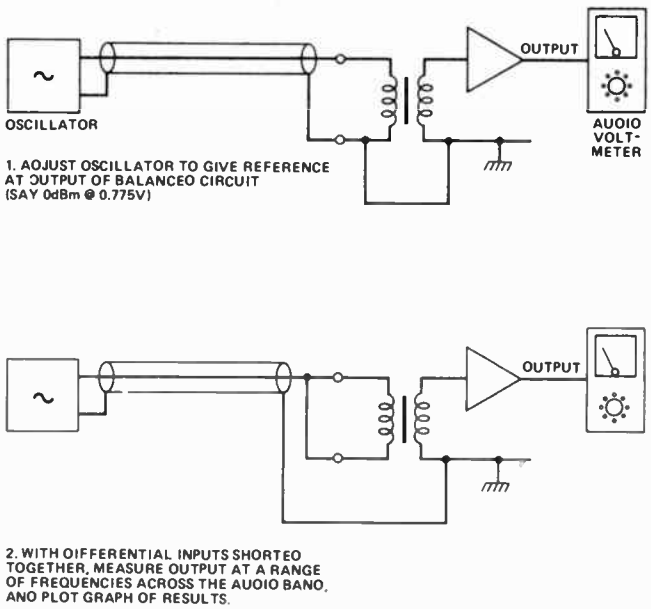

Fig. 5 Measuring the Common Mode Rejection Ratio (CMRR) of a differential input.

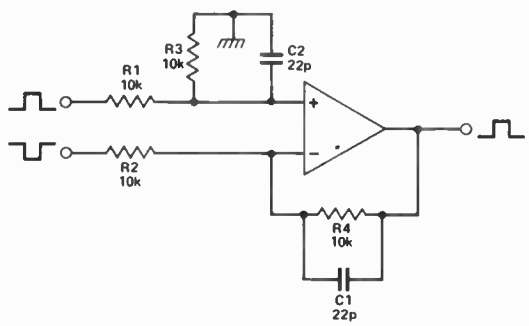

Fig. 6 Balanced input circuit using a single op-amp.

capacitors also need to have the same value, and C2 is often small trimmer in parallel with a fixed component that is lower in value than C1. With careful adjustment, the CMRR can be as high in value as 90dB across the audio band. This circuit can give excellent results, but has a few shortcomings which rule out its use in high quality equipment.

The two inputs have differing impedances because R2 is terminated by a virtual ground whereas R1 is loaded by R3 in parallel with the input impedance of the op-amp. Unequal

World Radio History

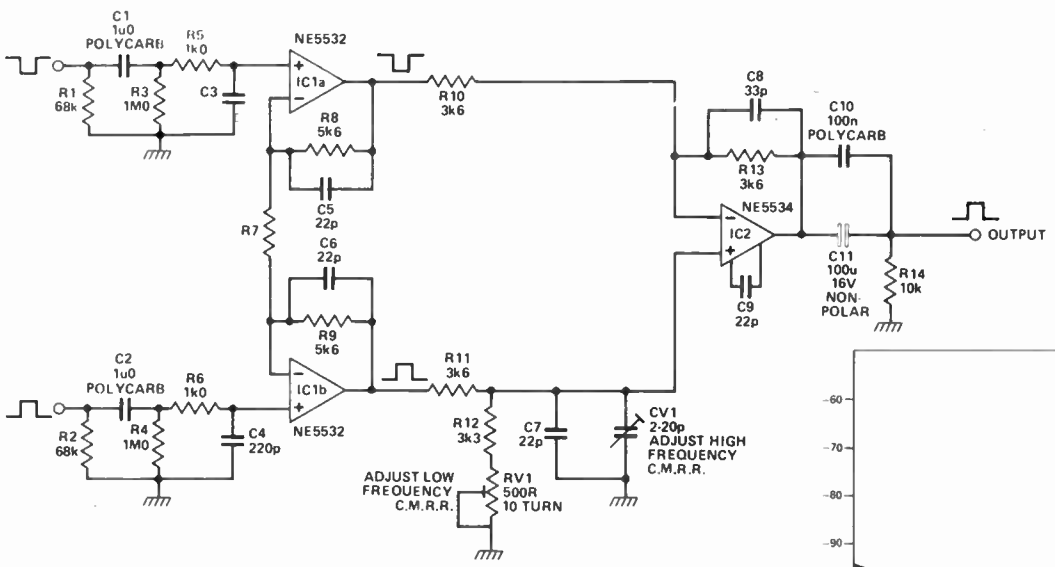

Fig. 7 A balanced input amplifier which uses input buffers to reduce the values of resistance required, thereby achieving a low level of thermal noise.

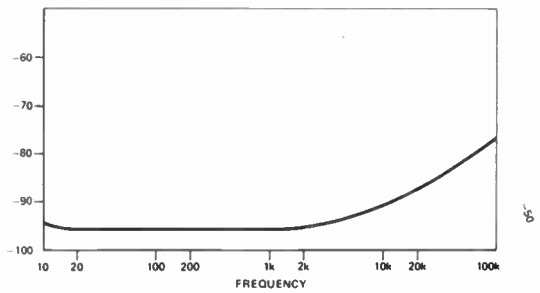

Fig. 8 The common mode rejection offered by the circuit of Fig. 7.

input impedances may not be of too much concern depending upon the type of balanced output connected to them, but the actual impedance value may assume a greater importance. It is standard practice to make the impedance of line level inputs 10k ohms or greater so that signal level is not reduced by loading effects, and it is often desirable to present a load of 50k ohms or more to the incoming signal. It will be found that if the value of the resistors is increased sufficiently to give a reasonably high input impedance, say 33k, then thermal noise has to be considered.

The noise voltage of a resistor is given by:

$$\sqrt{4kTBR}$$

Where k = Boltzmann's constant (1.381×10^{-6})
T = Absolute temperature (C° + 273)
B = Bandwidth
R = Resistance in ohms

For a 33k ohms resistor, assuming a band width of 20kHz and an ambient temperature of 25°C, the noise voltage is therefore 3.296×10^{-6} or, in a more recognizable form:

$$20 \log \frac{0.775}{(3.296 \times 10^{-6})} = -107.4\text{dBm}$$

which is not particularly brilliant. Now, if the resistor value is reduced by a factor of 10, its noise contribution will be reduced by 10dB, which is a significant improvement.

A practical circuit which takes account of thermal noise problem is shown in Fig. 7. It is essentially the same as the circuit shown in Fig. 6 except that buffers have been added to each of the inputs. These allow the impedance of each input to be the same and of virtually any value required, yet the resistances around the differential stage may be low enough to avoid noise problems. An additional advantage is that the stage gain can be adjusted by changing one resistor – R7. The gain is calculated from:

$$20 \log \left(\left(\frac{R8 + R9}{R7}\right) + 1\right)$$

or for a required gain,

$$R7 = \frac{R8 + R9}{A \log\left(\frac{Av(dB)}{20}\right) - 1}$$

This stage is ideal for the line level inputs operating over a gain range from unity to 20 or 30dB. It has low noise, negligible distortion (typically 0.002% over the audio band) and excellent common mode rejection (see Fig. 8). To adjust RV1 and CV1, use the set-up shown in Fig. 5. With a 100Hz input signal, set RV1 so that the circuit output voltage is at its minimum level, then reset the oscillator to 15kHz and trim CV1 for minimum output.

This circuit is often referred to as an 'Instrumentation' input. As well as being an ideal balanced input stage for pre and power amplifiers, mixing consoles etc, it also makes a suitable input for many types of high quality test equipment. Audio frequency voltmeters, distortion meters and many other instruments use the circuit because it has very stable and clearly defined gain characteristics and a wide bandwidth with an extremely flat frequency response. With the component values shown in Fig. 7, the -3dB points are at approximately 0.5Hz and 150kHz with less than 2° of phase lead at 20Hz and about 7° of lag at 20kHz.

A number of changes may be introduced to optimize the circuit for specific applications. Input noise may be reduced by replacing C1 and C2 with 10u or 22u non-polarized electrolytics (not forgetting to put a 100n polycarbonate in parallel with each one in the interest of sound quality!) This will also give a few more dB of common mode rejection at low frequencies, and the phase shift at 20Hz will be reduced

World Radio History

to 0.06. For use in test equipment, C3 and C4 should be reduced to 47p in order to keep the response flat to 100kHz.

Stage gain may be made adjustable by using a single pole switch to select different values of R7 or a potentiometer in series with a fixed resistor (see Fig. 9). Note that AC coupling has been introduced to avoid problems from switch clicks or potentiometer wiper noise which would otherwise arise due to inevitable DC offsets at the op-amp inputs.

If an accurate stepped attenuator is placed in front of this circuit and some additional gain stages added after it, you have the input stage of a professional-quality audio voltmeter which will give FSD readings from 300V to 10uV – a range of 150dB! (When some further development work has been carried out, you may have the pleasure of constructional article based on it).

So far, we have looked at the balancing of high level signals, but there are far more benefits to be gained by employing the same techniques when signal levels are in the milli or microvolt region. For a high quality microphone amplifier, the basic configuration of Fig. 7 may be used but with a few important changes.

The biggest single problem with microphone amplifiers is keeping the noise contributed by the active stage as low as possible. The thermal noise of a 200 ohm source is 129.6dBm, so a perfectly silent microphone amplifier with a gain of 60dB and a 200 ohm input load, would have an output voltage of -69.6dBm over a 20kHz bandwidth. If a real amplifier has an output of -67dBm, it is said to have a noise figure of 2.6dB. Some manufacturers claim noise figures as low as 1dB, but 1.5dB is a more realistic aim, and the circuit of Fig. 10 can achieve this providing great care is taken with construction and component choice.

The input impedance is fixed at 1k2 ohms by R4, this being the currently accepted value for loading 200 ohm

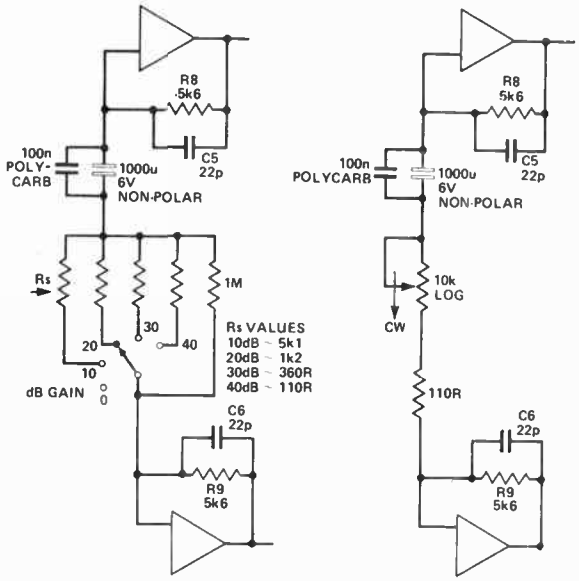

Fig. 9 The circuit of Fig. 7 can be modified to provide either (a) switched gain or (b) continuously variable gain.

FUNCTION GENERATORS

KZ-1404A: • Seven frequency ranges 0.05 Hz to 1 MHz • Continuously variable voltage output 0-10V • Accuracy ± 3% • DC offset: -5V to + 5V • Input voltage; 115/220/V AC ± 10% 50/60 Hz • Dimensions: 3.5" high, 12" wide, 13" deep **$349.**

KZ-1405: • 8 frequency ranges: 0.01 Hz to 10 MHz, gated with phase control • 20 volt open load; 50 ohm output • DC offset variable within ± 10V **$895.**

Plus $10 for shipping and handling.
Ontario residents add 7% P.S.T. Order by phone or mail.

VISA MasterCard

KB ELECTRONICS
355 Iroquois Shore Road, Oakville, Ont. L6H 1M3
(416) 842-6888 Telex: 06-982396 (KBEL OKVL)

Circle No. 23 on Reader Service Card

K.E.M. New Model for IBM AT/XT/Turbo

Only K.E.M. original almighty SUPER EP-ROM TOASTER can support 1 Mega bits EP-Rom programmer, 1-chip CPU programmer & EP-Rom emulator adapter units.

Features:
- Program 2716 to 27512 including CMOS and A versions in super high speed.
- Can Program 32 pin type/One Megabit EP-Rom with optional adapter unit KEM-904.
- Can Program 1-chip CPU with optional adapter units KEM-903A (8741/48/49) or KEM-903B (8751).
- Also with an optional EP-Rom unit KEM-902 this programmer becomes a powerful development tool.

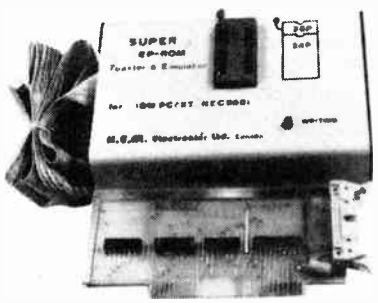

Super EP-Rom Toaster
KEM-901SP for IBM . **$195.00**
KEM-901 for Apple . . **$195.00**

1 Mega bits EP-Rom Programmer adapter unit
KEM-904 . . . . . **$130**

1-chip CPU Programmer Unit
KEM-903A, KEM-903B . . **$145**

EP-Rom Emulator adapter unit
KEM-902 (Max.256K) . . . **$130**

Intel HEX or Motorola, format - Binary format convert software. (to Program from C-compiler, Assembler etc. into EP-Rom) . . . . . **$ 50**

$6.00 for shipping. Plus PST for B.C. residents. Plus C.O.D. fee, if required. Sorry we have no facility for credit cards and do not accept invoices orders.

K.E.M. Electronics Ltd.
Mail to Box 69126 Station(K), Vancouver, B.C. V5K 4W4
Office 879E. Hastings Vancouver (604) 251-1514

Circle No. 24 on Reader Service Card

World Radio History

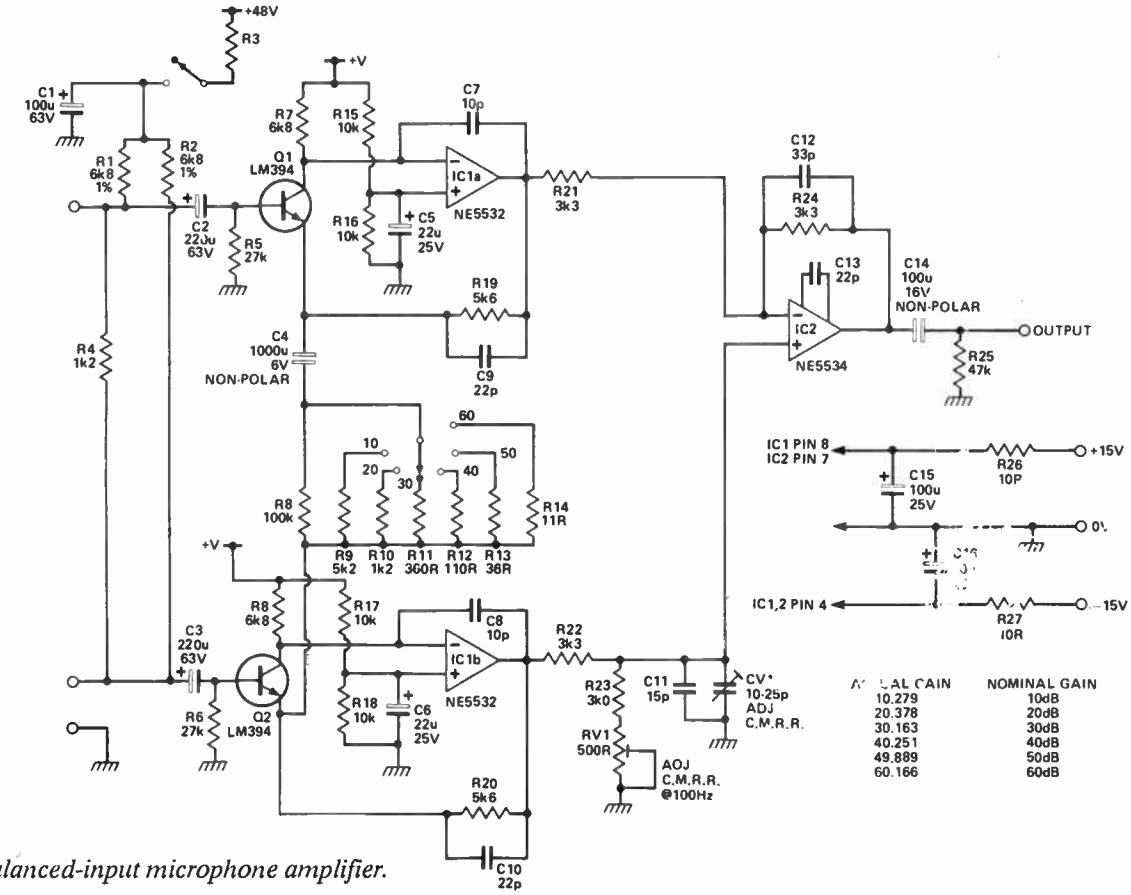

Fig. 10 A balanced-input microphone amplifier.

microphones. It may be changed if a different value is recommended by the microphone manufacturer. R1 and R2 apply 48V phantom power to energize capacitor microphones and should be closely matched, either by purchasing 1% tolerance components or by measuring with an accurate bridge of a digital multimeter. If the circuit is only to be used with dynamic microphones, R1, R2 and R3 together with C1 may be omitted, as may C2 and C3. This will give a slight improvement in signal-to-noise ratio and an improvement in sound quality due to the loss of a pair of electrolytic capacitors from the signal path. As the common mode rejection is adjusted at a part of the circuit that comes after the gain setting stage, there will be a variation of rejection with gain. Although more impressive rejection can be obtained at 10dB gain than at 60dB it is preferable to carry out the adjustment at the 30dB or 40dB setting.

With a carefully designed PCB layout, this circuit will perform as well as and possibly better than any professional microphone amplifier currently available.

Balanced Disc Stage

Another type of input stage that benefits from balancing is the RIAA pick-up amplifier, particularly when a low output moving coil cartridge is in use. Fig. 11 shows the disc input of a particular unit, which has a balanced input. Using such an arrangement may mean that minor surgery has to be carried out on the wiring of your pick-up arm in order to remove the ground connections from the signal leads, but the results will be found to justify this annoyance. Try it and see.

Balanced Mixing

The final balanced input circuit I have shown is that of a virtual ground mixing amplifier. Mixing busses are extremely sensitive to hum and noise, but the problem can be greatly reduced by adopting a balanced mixing system. Two basic arrangements are possible, the input channel amplifiers having either single-ended outputs or balanced outputs (Fig. 12). In both cases the signals feed into a differential input, and any noise voltages picked up along the bus lines will appear at the mixing amplifier inputs with the same phase and will be cancelled in the usual way.

A practical circuit for a differential input mixing amplifier is shown in Fig. 13. It resembles the line input circuit of Fig. 7, except that here the incoming signals are taken to the inverting inputs of the op-amps. The use of 3k3 resistors for feedback and mixing helps keep the noise down and the linearity is improved by having the input capacitors inside the feedback loop. With 3k3 input resistors, this circuit will accept up to fifty inputs with no low frequency problems and will attenuate common mode noise from mixing busses ten or twelve feet long by 60-80db

Balanced Outputs

Microphones and pick-up cartridges are intrinsically balanced, but amplifier outputs are not. The easy way out is to hang a transformer onto the end of a single-ended output stage, but in this day and age it is rumored that miraculous things can be done with a handful of chips and a bit of ingenuity.

World Radio History

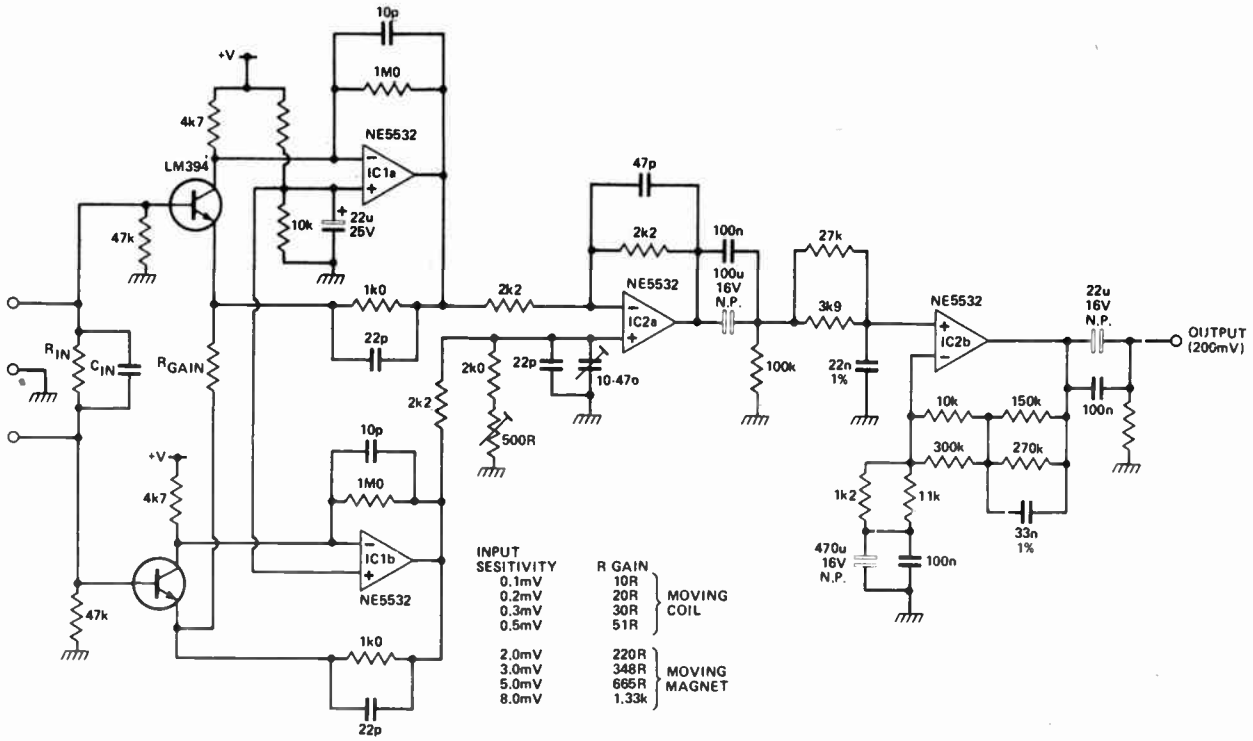

Fig. 11 A balanced-input disc stage, providing RIAA equalization and suitable for use with moving coil cartridges.

If a balanced output is just two outputs in phase opposition, there are several ways of obtaining this (see Fig. 14). They all have on failing — namely that if one output is shorted to ground, the output level drops by 6dB because the peak-to-peak voltage swing is halved.

A solution is shown in Fig. 15, a balanced output stage which delivers the same level into balanced and unbalanced inputs. When this is used with an unbalanced input, it is essential that the unused output is shorted to ground as distortion and noise will otherwise increase.

The operation of this circuit is fairly obvious. Disregarding the input buffer, assume a 1V input at A which feeds both the inverting and non-inverting op-amps. Taking the inverting stage first (IC2a), you may expect there to be -1V at point B. Instead the cross-coupled feedback through R10 is attenuated by the potential divider R10, R7 and puts +0.25V onto the non-inverting input of IC2a. This is then amplified by 2 (think of R5 as a feedback shunt resistor connected to 0V) so the output becomes -1+(0.25x2) = -0.5V. The non-inverting amplifier (IC2b) has a gain of 2 due to R8 and R12. Its input is held midway between the input voltage and the voltage at B due to the dividing action of R6 and R11. The output of IC2b is therefore

$$2\left(\frac{-0.5+1}{2}\right) = +0.5V$$

The output between B and C is consequently 1V.

In the unbalanced mode with output C grounded, the feedback voltage via R10 no longer exists, so IC2a with its gain of 1 gives an output of -1V at B. If B is shorted to ground, the voltage at the non-inverting input of IC2b becomes +0.5 which is amplified to 1V and appears at C. Unfortunately,

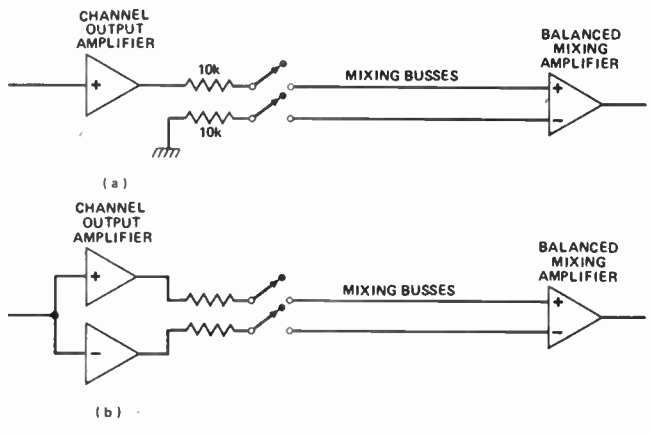

Fig. 12 Balanced mixer arrangements using (a) single-ended amplifiers and (b) balanced-output channel amplifiers.

this balance is not so easy to achieve in practice, primarily due to component tolerances. To overcome this, a preset (RV1) is used to load one output more than the other until the balance is exact. This should be set so that both outputs are exactly the same level when measured with respect to ground. An easy way to make this adjustment is shown in Fig. 16.

So, now you know how to balance. The question remains, do you know what to balance? Any interconnection between two pieces of audio equipment can be balanced by the addition of a few op-amps, but it is rarely worth interfering with low impedance unbalanced connections which are carrying

World Radio History

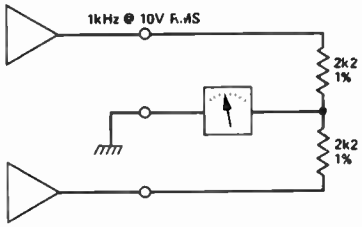

Fig. 16. Adjusting the balance of the circuit shown in Fig. 15. RV1 is set to give a minimum output level.

high level signals over short distances — say less than 20 meters. Microphones should always be fed to balanced inputs, and it is also worth balancing pick-up cartridges and tape recorder heads. Connections between pre and power amplifiers are often improved by balancing, especially where ground currents from the power amplifier would otherwise find their way into the sensitive parts of the pre- amplifier and cause hum.

In brief, balancing can only bring about an improvement in a situation, so if you have more than your share of the dreaded hums give it a try.

What you Didn't Know About Solder Guns:

Z-50 CORDLESS SOLDER GUN

PRINCIPLE OF OPERATION

The Z-50 soldering tips contain both the heating element and temperature sensor. The combination of a small tip mass, powerful heating element and fast sensor response assures the very efficient use of the energy stored in the batteries. In operation the tip temperature actually increases to match the workload.

- Lightweight: 11 oz./315g.
- Charging Unit included - doubles as docking station - overcharge protected CSA Approved.
- Cordless for safety and convience and 4 hr. recharge
- Made in Canada
- 650°F within 10 seconds at full charge from cold start.
- Since tip temperature rises to match workload there is no longer a need for more than three tip styles.
- Full 1 year warranty (tip excluded)

$149.95

Spare Tip "Fine Point" $14.95

Please add $8.50 for postage and handling. Quebec residents add applicable P.S.T.

Zimac Laboratories

111 Bombardier St.,Chateauguay

Quebec J6J 4Z2 (514) 691-5510

Fax: (514) 691-6467

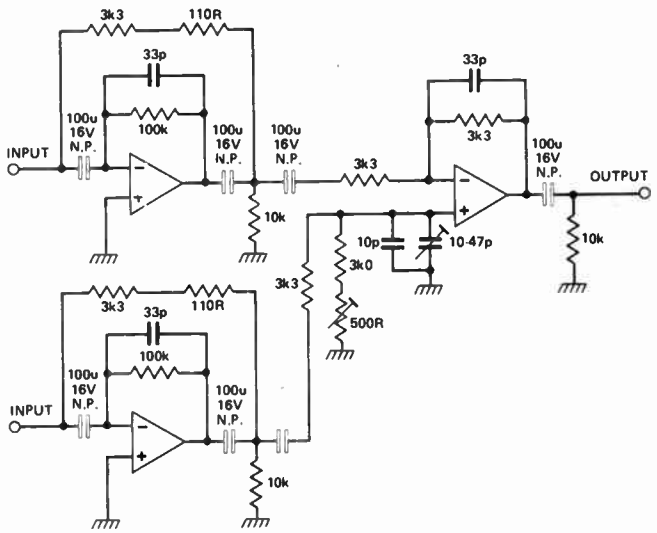

Fig. 13 A practical circuit for a balanced-input mixing amplifier.

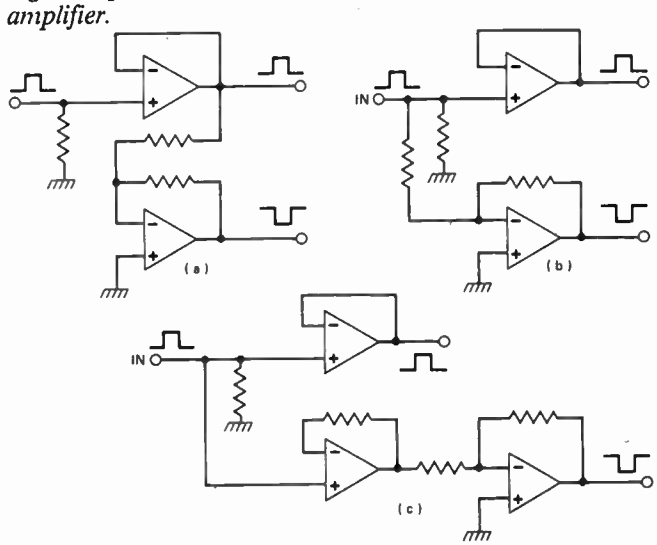

Fig. 14 Some differential (or balanced) output configurations.

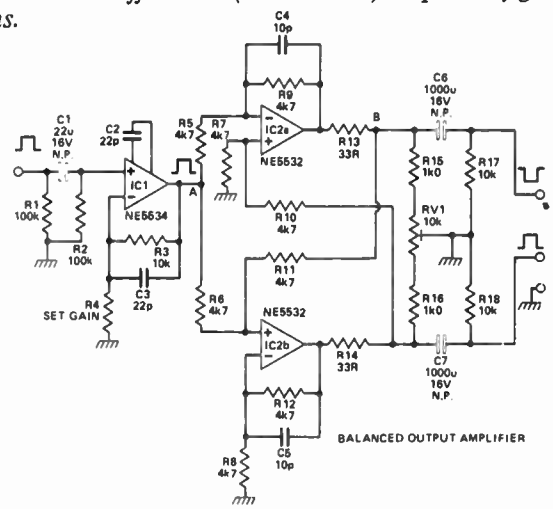

Fig. 15 A balanced output amplifier. The cross-coupled feedback increases the output of either op-amp by 6dBm when the opposite output is shorted to ground, thus allowing the circuit to drive unbalanced inputs as well as balanced ones. ■

World Radio History

IF YOU WANT TO GET INTO PC SERVICING, YOU HAVE TO GET INTO A MICROCOMPUTER!

Learn PC Servicing By Building Your Own Desk-Top Computer!

NTS Intronic Home training gets you right down into the heart of computer circuitry. Learn how microprocessors function, how they operate and are used to solve problems. Your program includes a wide variety of tests and projects you perform as you build your own PC, circuit board by circuit board unit by unit.

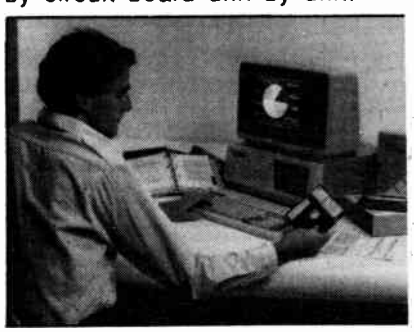

SEND FOR "FREE COLOUR CATALOGUE"

Hand-On Training With Your (IBM Compatible) PC-XT Puts You At The Leading Edge Of Technology!

This remarkable desk-top PC is the most powerful and versatile ever offered in any home study course. Advanced features of this PC-XT include:

- 16 Bit 8088 microprocessor for IBM compatibility
- 640 K RAM for high speed performance
- 8 expansion slots
- 135 watt power supply
- Dual 360K double density floppy disk drives
- Colour graphics/printer adapter card
- Operating system included: MS-DOS with GW Basic

IBM is a Registered Trademark of International Business Machine Corp
MS is a Registered Trademark of Microsoft Corp

NTS Offers Many Additional Courses in Electronic and Other Fields:

- ☐ Robotics
- ☐ Video Technology
- ☐ TV & Radio Servicing
- ☐ Industrial Technology & Microprocessor
- ☐ Basic Electronics

NTS
TRAINING THE WORLD FOR THE 21ST CENTURY

National Technical Schools
Canadian Office
517 Bohemia Crescent
Oakville, Ontario L6J 2K7
(416) 842-8383

School Head Office: 456 W. Martin Luther King Jr. Blvd., Los Angeles, CA 90037

World Radio History

Accented Beat Metronome

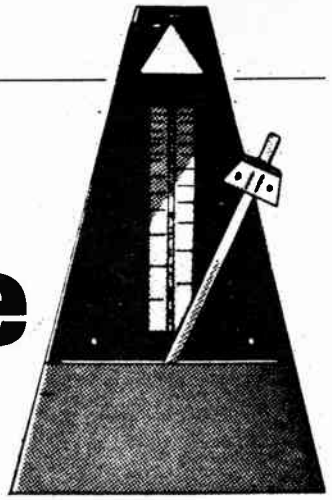

Keep time with this simple, inexpensive metronome

By Robert Penfold

Although purely electronic, the Accented Metronome is a modern equivalent to the traditional pendulum style mechanical type and has been designed to give the same sort of "click" sound to indicate each beat.

Some mechanical metronomes also have a bell which can be used to give an accented beat and this unit has a similar facility. This is in the form of an additional circuit which enables a longer and deeper "thud" sound to be used to accent anything from every second beat to every tenth beat. The accentuation can be switched out altogether when it is not required.

The unit also has a bargraph display which gives a visual indication of the beat sequence, and is the equivalent of being able to see the pendulum of a traditional metronome. However, the ten LED bargraph shows exactly which beat is the current one in the sequence, even when, say, only every sixth or eighth beat is accentuated.

The unit is self-contained with power being provided by an internal 9V battery, and it is quite simple and inexpensive despite the fact that it provides both an accented beat facility and an LED display. It covers a wide beat range of around one every two seconds to about five per second.

System Operation

A clock oscillator, two monostable multivibrators and a digital divider circuit form the basis of the metronome, as can be seen from the block diagram of Fig. 1. The clock oscillator is a low frequency type which has its output frequency made adjustable by means of variable resistor. The frequency range covered by the unit governs the beat rate range of the metronome, and is therefore about 0.5Hz to 5Hz.

The output of the clock oscillator drives the input of a monostable multivibrator. The direct output of the oscillator is less than ideal for driving the loudspeaker as it is virtually a squarewave signal, whereas a short pulse signal is needed to produce each "click" sound.

The monostable is a non-retriggerable type which acts as a pulse shortener, and provides and output pulse of suitable duration regardless of how long the input pulse duration happens to be. The output pulses from the monostable are fed into a mixer circuit, and from here they are coupled to an output stage which provides the fairly high drive current needed to get good volume from the loudspeaker.

This gives the basic metronome function, but some extra stages are needed in order to give the accented beat facility. The main one of these is a divide by "N" counter, and this has a division rate which under switch control can be set to any integer from two to ten.

The output of the divider drives a second monostable multivibrator, but obviously this monostable will only be triggered on every second clock cycle, third clock cycle, or whatever the selected division rate dictates. The output pulses from this second monostable are mixed with the signal from the first one, but as the loudspeaker is already driven with the maximum output current that the output stage can provide, this does not in itself provide any significant accentuation of the basic "click" sounds.

The accentuation is provided by having the output pulse duration of the second monostable several times longer than the pulse length of the first one, so that the accented beats are indicated by what are really longer output pulses. These are perceived by listeners as deeper sounds which have an apparently higher volume level, and which are clearly distinguishable from the ordinary "click" sounds.

Display

The divider circuit has ten outputs which can be used to directly drive the bargraph display, and no special decoder or driver circuit is needed here. In fact the display is not a true bargraph type, which would have the first LED lit to indicate the first beat, LEDs one and two switched on to indicate the second beat, and so on.

This display operates in what is generally known as the "dot" mode, where the first LED. lights up to indicate the first beat, the second LED, (and only the second LED) switches on to indicate the second beat, the third LED turns on to mark the third

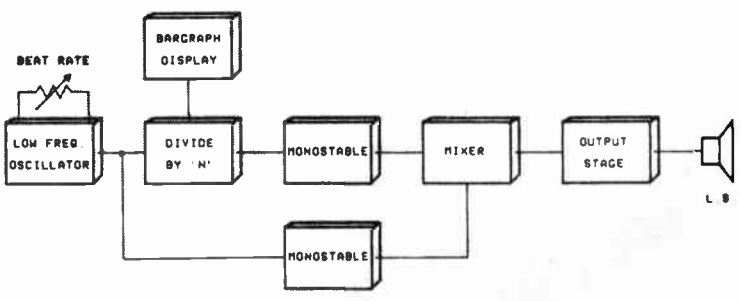

Fig. 1. Block diagram showing arrangement used in the Accented Beat Metronome.

World Radio History

beat, and so on. A "dot" type display perhaps gives a slightly less clear indication, but it is the only type that can be easily used with the driver circuit available in this case, and it also has the great advantage of providing the unit with a much lower level of current consumption.

Circuit Operation

The complete circuit diagram of the Accented Metronome appears in Fig. 2.

A 555 astable circuit generates the clock signal, but in order to keep the current consumption of the circuit down to an acceptable level a low power version of the 555 such as the 7555 is recommended for IC1. Potentiometer VR1 is the frequency control, or the Beat Rate control as it should more correctly be called in this case.

The timing capacitor C2 should be a tantalum bead component. An ordinary electrolytic type capacitor is considerably less than ideal for this application where the poor tolerance rating could give a frequency range which was well away from the desired one, and the high leakage level could result in even worse frequency accuracy or even the circuit failing to oscillate at all at the low frequency end of the range.

Both monostables are based on two of the CMOS 2-input NOR gates of IC3 and use what is a standard configuration. IC3a and IC3b have capacitor C3 and resistor R4 as their timing components, and the approximate output pulse duration is 0.2 milliseconds. This gives the higher pitched "click" sound. IC3c and IC3d have C4 and R6 as their timing components, and with an output pulse duration of about 0.8 milliseconds or so this gives the lower pitched "thud" sound.

The two sets of output pulses are mixed by resistor R7 and R8 which form a simple passive mixer circuit. The pulses drive TR1 hard into conduction so that a heavy but brief current is driven through the loudspeaker LS1.

The peak power level fed to the loudspeakers is actually quite high and constitutes a considerable overload, but as the output pulses are very brief and infrequent the average power fed to LS1 is quite low, and there seems to be no danger of it being damaged. A high impedance (about 64 ohm) loudspeaker would appear to be better suited to this type of output stage, and although loudspeakers of this type will work quite well in the circuit, they provide a substantially lower volume level than low impedance types.

Divider

The divider IC2 is a CMOS 4017BE, which is a decade counter and one of ten decoder. In this case the ordinary divide by ten ("carry out") output at pin 12 is of no interest and is ignored. It is the other ten outputs that are of use, and these are numbered from "0" to "9".

When the device is reset, output "0" goes high and all the other outputs take up the low state. On the next clock pulse output "0" goes low and output "1" assumes the high state. The next clock pulse takes output "1" low again and sets output "2" high.

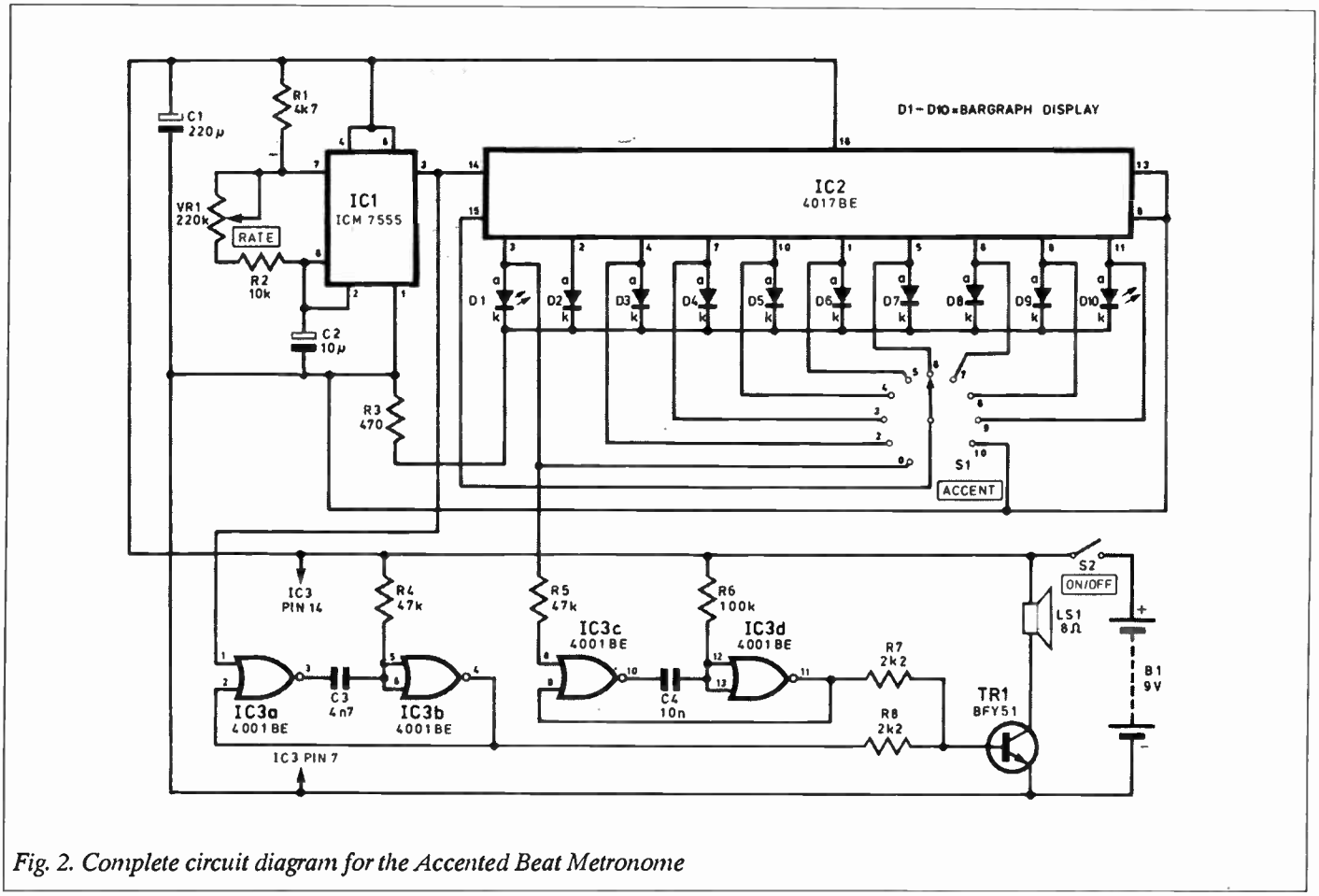

Fig. 2. Complete circuit diagram for the Accented Beat Metronome

World Radio History

This sequence of events continues until output "9" goes high. In the next clock pulse output "9" returns to the low state and output "0" goes high again. This takes things back to the beginning again, and the device cycles indefinitely in this manner.

At least, it does if it is allowed to. In this circuit the Reset input at pin 15 of IC2 is coupled by switch S1 either to one of the outputs, or in the tenth position it is simply tied to the 0 volt rail. It is therefore only in position 10 of switch S1 that IC2 provides the standard divide by ten action. In the other switch positions at some stage in the sequence the output to which the reset input is connected will go high, and IC2 will immediately be reset to the initial state where output "0" is high.

For example, in position 2 output "0" will go high in the normal way, followed by output "1" on the next clock cycle. However, when output "2" goes high IC2 is reset and output "0" goes high again. A divide by 2 action is therefore obtained, and by selecting the appropriate switch position any division rate from two to ten can be obtained.

The "0" output of IC2 is coupled to the input of the second monostable via resistor R5, and an "accented beat" is therefore produced each time a new cycle recommences. The LEDs of the bargraph display (D1 to D10) are driven from the ten outputs of IC2, and the appropriate LED for the current beat in the sequence is switched on since its output, and only its output, will be in the high state. As only one LED at a time will be switched on, a common current limiting resistor (R3) can be used for all ten LEDs.

In position 0 of switch S1 the reset input is tied to output "0", and this holds the device permanently in the reset state with the clock pulses consequently having no effect on IC2. This results in the first LED in the bargraph being switched on continuously, and with no input pulses fed to the second monostable the accentuation is disabled.

Power is obtained from a 9V battery, and the current consumption of the circuit is only about 8 milliamps.

Construction

Although this is potentially a rather awkward project, the printed circuit design and component layout shown in Fig. 3 helps to make matters much more straightforward.

Construction of the board is not difficult, but bear in mind that IC2 and IC3 are both CMOS types, and that the normal anti-static handling precautions should be observed when dealing with these. This basically means using integrated circuit holders for these components, and not fitting them into place until the unit has been completed in all other respects.

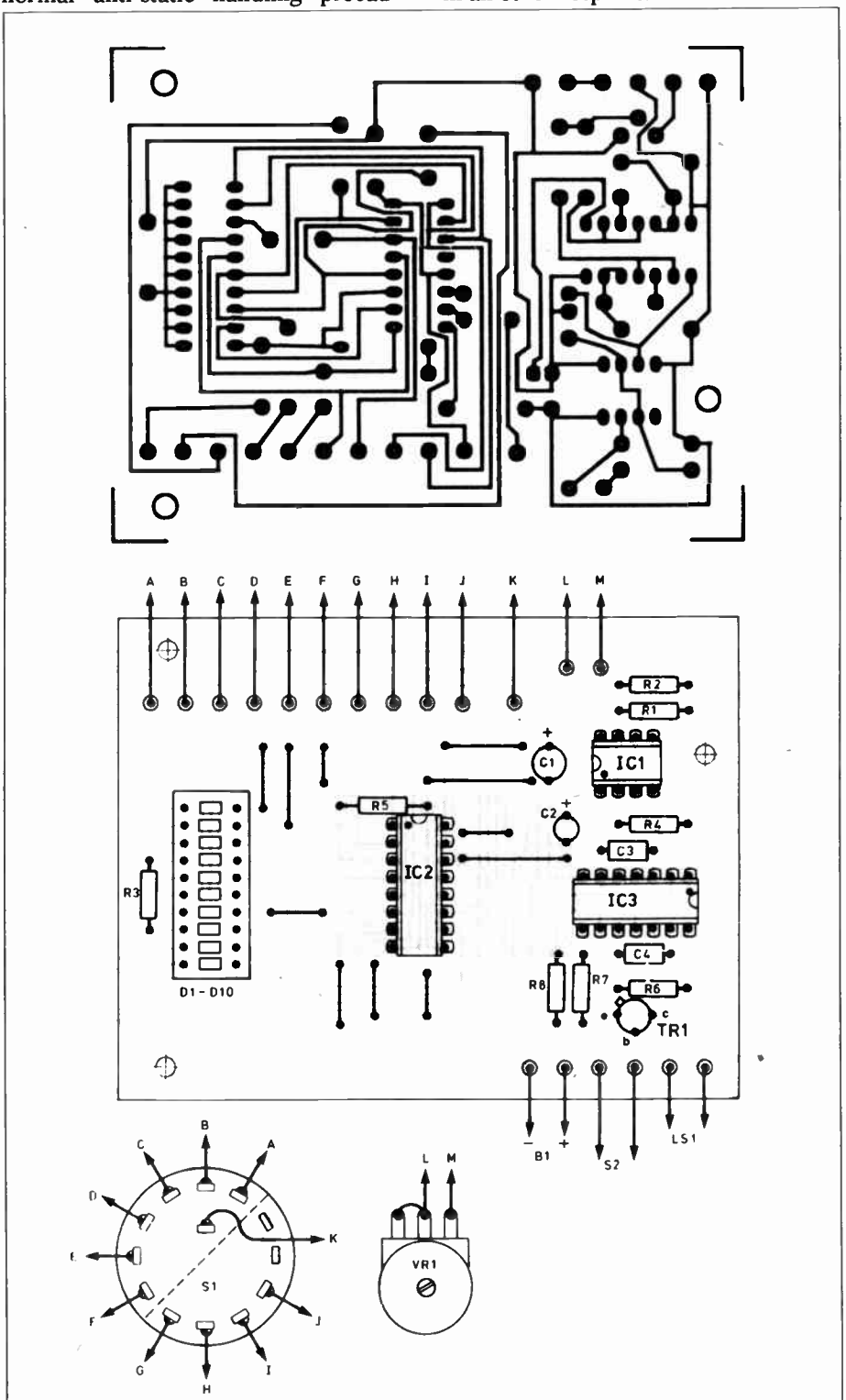

Fig. 3. Full size printed circuit board master foil pattern (top), component layout and interwiring for the metronome. Note that a 20-pin DIL socker must be used for mounting the bargraph display.

World Radio History

Electronics & Technology Today

Canada's Magazine for High-tech Discovery

Order Form

CLIP OR COPY AND MAIL

Subscriptions: Please complete bottom half to start or renew subscription.

SOFTWARE — Order Form

.....	.....	$ .....
.....	.....	$ .....
.....	.....	$ .....
	Sub Total	$ .....
	Tax (Ontario Residents)	$ .....
	Postage	$ .....
	Total Enclosed	$ .....

BOOKSHELF — Order Form

Code (e.g. BP12)	Title Short-form is O.K.)	Price
.....	.....	.....
.....	.....	$ .....
.....	.....	$ .....
.....	.....	$ .....
.....	.....	$ .....

SPECIAL PUBLICATIONS

ITEM	QTY	AMOUNT
Book of Computer Music $4.95	.....	$ .....
Project Book No. 3 $3.95	.....	$ .....

BINDERS

ITEM	QTY	AMOUNT
Moorshead Publications, $9.75 each. Ontario residents add 7% P.S.T.	.....	$ .....

BACK ISSUES

$4.00 each. Ontario residents add 7% P.S.T. Some issues may be out of stock, please call the reader service department at (416) 445-5600 or enclose a self-addressed, stamped envelope for a complete list of available issues.

Orders from the Bookshelf are tax exempt. Please add $1.00 for postage. Ontario residents add 7% P.S.T. for Specials and Software.

BE SURE OF YOUR ISSUE EACH MONTH. SUBSCRIBE TODAY.

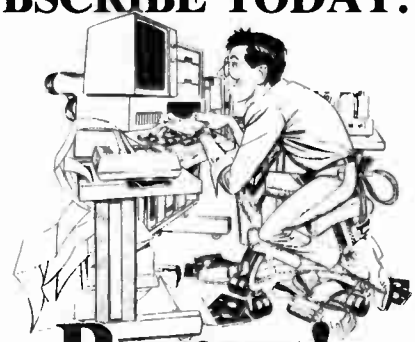

Bonus!

Subscribe today and receive a sampler disk filled with great public domain software programs (IBM PC/MS DOS format only). This disk contains great games like Pango and Pitfall, as well as a fantastic Chess program and some great DOS utilities. See what you've been missing!

Regualr value: $19.95
Time Limited Offer

Moorshead Publications

1300 Don Mills Rd., North York, Toronto, Ont. M3B 3M8

SUBSCRIPTIONS: ☐ NEW SUBSCRIPTION ☐ RENEWAL

Electronics Today

☐ One year (12 issues) **$22.95** ☐ **Two years (24 issues) $37.95**

Computing Now!

☐ One year (12 issues) **$22.95** ☐ Two years (24 issues) **$37.95**

Computers in Education

☐ One year (10 issues) **$25.00** ☐ Two years (20 issues) **$45.00**

Outside Canada (US Dollars)

For U.S. please add $3.00 per year ☐ Other countries add $5.00 per year ☐

NAME _____

ADDRESS _____

TOWN/CITY _____ PROVINCE/STATE _____

CODE _____ DATE _____

POSTAL CODE _____

☐ Cheque enclosed DO NOT send cash

☐ MasterCard Account No. _____

☐ Visa Account No. _____

☐ American Express Account No. _____

Expiry Date _____

Signature _____

World Radio History

Until then they should be left in their antistatic packaging (plastic tubes, conductive foam, or whatever) and they should he handled as little as possible when it is time to plug them into their holders. Avoid getting them anywhere near any obvious source of strong static charges.

Although IC1 is also a CMOS device, it does not require any special handling precautions as it has very effective internal protection circuits which render them unnecessary. As the 7555 integrated circuit is very inexpensive, it is recommended that an IC holder is used for IC1.

It is assumed in Fig 3. that the bargraph display is of the type which has a 20-pin DIL package, and this will plug straight into a 20-pin DIL integrated circuit holder mounted on the board. This socket is not just needed to prevent possible heat damage to the device when fitting it into circuit, but is also required to physically raise the display to as more suitable height. The socket should *NOT*, therefore, be omitted.

With this type of display there usually seems to be nothing to indicate which way it should be fitted, but if necessary the correct orientation can be found by trial and error, and the display will not sustain any damage if it is fed with power of the wrong polarity.

Of course, if preferred the bargraph display can be formed from ten ordinary panel mounting LEDs fitted on the front panel of the unit, and this could actually give a much clearer display. On the other hand, it would increase the amount of hard wiring required and would make construction of the unit much more difficult.

Case

The case used for the prototype is a plastic type having an aluminium front panel and approximate outside dimensions of 205mm by 145mm by 40mm. The unit could actually be fitted into a much smaller case if desired, although this might necessitate the use of smaller loudspeaker with a consequent reduction in volume, and it could prove difficult to mount the printed circuit board in a way which brings the display into a suitable position.

Assuming that the metronome is built along the same lines as the prototype, the three controls are mounted on the front panel and the loudspeaker is fitted towards the left-hand side of the top panel or case "lid".

A speaker grille of some kind is needed, and the most simple way of producing one of these is to drill a matrix of holes about 5 millimeters in diameter. Be very careful with the placement of the holes though, as it is not quite as easy to make a neat job of this as one might think.

Miniature loudspeakers rarely have any provision for screw fixing, and it is normally necessary to glue them in place. Any good general purpose adhesive will do, but try to avoid smearing any onto the diaphragm.

The printed circuit board is mounted on the base panel towards the right-hand side of the unit, and it is mounted on spacers which give a stand-off about 20 millimeters from the base panel. This is to bring the display to a suitable height, so that it is immediately underneath a display window cut at the appropriate position in the top panel of the case.

The rectangular cutout can be made using a coping saw or a fret saw. A piece of red display window material is glued in place behind the cutout.

To complete the metronome the hard wiring is added, and this shown in Fig. 3. The wiring from the board to the Rate control (VR1) and the Accent switch (S1) is carried out by wiring from point "A" to point "A" and then the two point "B"s are connected together, and so on. Ordinary multistrand connecting wire is used and there should be no real difficulty here provided the pins, component tags, and the ends of the leads are properly tinned with solder prior to making each connection.

There is ample space of the battery, and this can be held in place with a double-sided adhesive pad. If six 1.5V batteries in a holder are used, a standard 9V style battery clip is needed to make the connections to the holder.

In Use

Give the finished unit a thorough check for errors before switching it on and testing it. Once switched on it should produce a regular "clicking" sound at the rate controlled by VR1, and by setting S1 to introduce the accentuation the appropriate sounds and responses from the display should be obtained. If there is any sign of a malfunction, switch off at once and recheck all the wiring.

If the metronome is to be adjusted "by ear" there is no need to mark a scale around the control knob of VR1, but many users will require some sort of beat rate scale. There is no real difficulty in finding calibration points by counting the number of beats in a certain period of time, and using trial and error to fine tune VR1 to the correct settings. These can then be marked using rub-on transfers.

It can be difficult to make a really accurate scale as the calibration points tend to become cramped at the high frequency end of the range. This problem can be eased by using a "logarithmic" potentiometer for VR1 and connecting it in reverse so that clockwise adjustment gives a reduction in the beat rate. This gives something approximating to a linear scale but it is reverse reading of course.

Using a large control knob also helps to space out the calibration points and make precise adjustment easier.

Parts List

Resistors (All 1/4W, 5% carbon)

R1	4k7
R2	10k
R3	470R
R4,5	47k
R6	100k
R7,8	2k2

Potentiometer

VR1	220k

Capacitors

C1	220u radial 10V elect.
C2	10u 16V tantalum bead
C3	4n7 polyester
C4	10n polyester

Semiconductors

IC1	7555 CMOS Timer
IC2	4017 decade counter
IC3	4001 quad 2-input NOR
TR1	2297 npn silicon
D1-D10	10 LED bargraph

Miscellaneous

S1	12-way, 1-pole rot. with stop
S2	Sub-min SPST toggle
LS1	8 ohm loudsp. 76mm diam.

Case: 250mm x 145mm x 40mm; PCB; 8-pin, 14-pin, 16-pin, and 20-pin DIL IC holders; 9V battery and clip; red display window material; 2 control knobs; solder pins; wire; stand-offs etc.

■

World Radio History

The Scientists Tell Me...

By David P. Dempster

Superchips on the Way

A newly developed technology called CMES (Complementary Metal Semiconductor), which could lead to the production of a superchip, has been introduced by a group of researchers under Professor Per Arne Tove in the Department of Technology at Uppsala University in Sweden. Because of its sensitivity to radiation the superchip is considered most suitable for use in space research and medical applications.

The new technology has a low power consumption, only about 1/100 of CMOS (Complementary Metal Oxide Semiconductor), due to lower voltage supply. It is much less sensitive to static electricity or radiation and it allows for even higher density VLSI (very large scale integration) than previously. It may be used for both analog and digital techniques.

The noise is reduced as carriers do not move as close to the surface as they do when CMOS is used and it is faster than in- polar technology. The lack of gate oxide also means that oxide problems like hot-electron effects are minimized.

Apart from being more suited than conventional CMOS to aerospace technology, test results also show a promising prognosis for use in nuclear detectors. This is due to the radiation-hard and low- noise properties and in electronic circuits placed at a high voltage with power supply via an optical fibre.

It would be equally useful in circuits for implantation in the human body like hearing aids where the low power consumption means longer battery life, and in applications in mobile radios and telephones as well. It would also be possible to improve the standard of tiny transistors without the problem of gate oxide.

In theory, production should be easier using the CMES concept, but in practice, about another year of development work is required before that stage is reached, according to one of the researchers.

Immune System Probed With Laser Microscope

At the University of Toronto a modern day Sherlock Holmes is using sophisticated technology to probe the mysteries of how cells recognize one another.

The detective is Professor Tania Watts and the technology she is employing is a custom-built laser-microscope. With the knowledge gained, scientists will be better able to understand autoimmunity and diseases such as AIDS and cancer.

Professor Watts, who is an immunology specialist, is particularly interested in T cell activation in the immune system, the body's battle zone with foreign agents. Two major components of the immune system, B cells and T cells, produce antibodies to foreign materials (antigens) that invade the body. B cells can recognize antigen directly, but this is not so with T cells. The latter cells only recognize foreign matter when it "piggybacks" on another cell such as a B cell or an antigen presenting cell. @INDENT = Small is very small in Watts world. That which Watts scrutinizes comprises foreign antigens, proteins called major histocompatibility complex (MHC) proteins and T cell receptors (the part of the T cell that recognizes both antigens and MHC proteins). All three play a role in cell recognition and Watts studies how these three components interact during T cell recognition.

When she was a research fellow at Stanford University in California, The young scientist became acquainted with a sophisticated machine; called a laser-microspectro-flurometer, which is used specifically to examine cell recognition events. The custom-designed unit now gracing her lab of U of T, the second one in all of North America, is her own handiwork – assembled from scratch by Watts.

So that she can study the glimmer of recognition that occurs when two cells meet, she first prepares a membrane solution consisting of a lipid bilayer containing purified MHC proteins. This a simplified version of a B cell surface and it is used to coat a glass slide. Then a fluorescent foreign antigen is allowed to bind to the glass supported membrane. At this point, Watts places a prism on top of the glass slide before positioning it in the microscope portion of the machine.

By directing a focused laser beam into the prism, laser light provides total internal reflection onto the glass supported membrane and allows her to examine the fluorescent molecules nearest the model membrane.

"By adding a second cell, a T cell, to the model membrane and using the laser to illuminate the region of contact between the T cell and the antigen cell, we are trying to infer what is going on when two cells recognize each other," says Watts.

Next on the schedule is an attempt to purify the T cell receptor in an effort to create a complete model system. "If we can regenerate the same binding activity with only components of the cell, then we can say we've identified all the components in the cell that were responsible for the recognition event," she commented.

She knows from her studies that only 1,000 molecules (an extremely small number) are needed to stimulate the T cell to release the hormone Interluken 2. What isn't known is which amino acids on a foreign antigen bind to which amino acids on the membrane proteins. It's the biochemical details on the binding action that she is trying to work out.

According to Watts, her research can be applied to any situation in which one cell recognizes another cell, such as embryogenesis and neural development, and any places in the body where cell-to- cell adhesion takes place. Ultimately, her research will lead to the development of better and more effective vaccines.

Funding for Watts research is being provided by the Medical Research Council of Canada and the National Cancer Institute.

Keeping Cool With The Sun

Using the sun to run a refrigerator isn't exactly new. What is new is the approach taken by a French firm, Brissoneau & Lotz Marine. Their system has no moving parts and with no moving parts, there is no friction and in the absence of friction there is no wear.

Conventional solar refrigeration systems employ DC power generated by solar cells to run the motor that in turn drives the system's compressor. However, with the French system there is a difference. Refrigeration is achieved by heating and cooling methanol, using the adsorption of methanol on activated carbon. The micro particles of carbon provide a very large exchange surface, due to their surface geometry.

How does it all work? Simple, really. The cooling cycle begins after sunset when the container of activated charcoal, adsorbs methanol from a reservoir. the very thin layer of methanol quickly evaporates, creating a cooling effect. This, in turn, causes the temperature to drop below freezing.

During the daytime hours the cycle is reversed and solar energy heats the charcoal, driving off the methanol as a vapor. This vapor condenses and is collected in the reservoir where it is again ready for the next cooling cycle.

The refrigerator has four main subassemblies: a solar collector, a stainless steel evaporator, a water reservoir, and an insulated section containing the evaporator and an optional ice cube maker. Also, there is a special ice producing model, the Gaspard CGI, which, it is claimed, can supply 11 pounds of ice per day.

So, if you're stuck beyond the reaches of the power company, this refrigerator may be the answer to keeping medicines or foods preserved efficiently, effectively and at low cost. The company states they can construct refrigeration warehouses by combining multiple refrigeration units inside the structure that are operated from roof-mounted solar panels.

Brissoneau & Lotz Marine has indicated they are interested in a joint venture with a Canadian company. Firms interested in exploring this subject may contact the company at B.P. 4, rue de la Metallurgie, 44471 Carquefou Cedex, Nantes, France, Tlx 710 747, Fax (33) 40 30 30 23 Tel. (33) 40 30 10 50

The Future Of Plastics

Biodegradable, environmentally safe plastics for use in surgical sutures, artificial limbs, and casings for time-released drugs and pesticides can be developed from lactic acid, an underused organic chemical.

According to Edward S. Lipinsky of Battelle Memorial Institute's Columbus (Ohio) Laboratories, lactic acid is unique because it can be directly converted into polyesters, and because it can be produced from materials as diverse as corn, sugar cane, wheat, barley, coal, petroleum and natural gas liquids.

Citing their high strength, adaptability and biodegradability, Lipinsky suggests that plastics produced from lactic acid should prove especially useful in pharmaceutical and medical applications. The biodegradability of lactic acid polymers makes them well-suited for prosthetic devices in

World Radio History

repair and reconstruction of traumatic wounds, states Lipinsky. He says the materials can replace steel plates and pins, allowing the bone to remodel stresses naturally as the polyesters gradually reabsorb.

Unfortunately, all is not roses. Lapinsky admits that lactic acid has certain weaknesses which have impeded its growth as a polymer source. Because it is produced by fermentation, lactic acid is difficult to obtain in the high purity required for commodity polymers.

The current availability and relatively low prices of petrochemicals have discouraged development of lactic acid processing. It won't always be so, says Lipinsky, and he says now is the time for the chemical process industry to initiate research into using a lactic acid starting material for resin products. In fact, he sees lactic acid as a sleeping giant just awaiting to be nudged in wakefulness when petrochemicals are hit by rising petroleum prices or shortages.

Missing Micros

The course in microprocessors promised for this issue has been delayed by production problems. It will be featured in next month's issue, along with a survey of the various training kits available.

Mini-Review: Cordless Soldering Iron

A new rechargeable soldering iron is on the market from Zimac Laboratories of Quebec. Eight nickel-cadmium batteries provide 50 watts to the unit, which is kept at full charge by the charger/holder. The iron's main advantage lies in the small tip mass and fast-response sensor located close to the tip's end, allowing most efficient use of the stored energy. The temperature can be adjusted from 550 to 750 degrees F.

Full heat from a cold start took less than ten seconds, and once warm, recovery after soldering was typically 1-2 seconds. The power control was impressive: we soldered solid 14-gauge copper wire easily, and then used the iron to solder delicate PCB traces. The iron matched itself to the job flawlessly. It would be ideal for field work because it can handle just about any soldering job you'll come across.

Operating time is about 3/4 hour depending on the workload, and full recharge time is about four hours (overcharge protection is provided). The iron weighs 11 ounces or 315 grams. Different sizes of tips are available.

The iron, charger and one tip are $149.95 from Ground Plus Electronics, PO Box 607, Aurora, Ontario L4G 4J9.

Circle No. 75 on Reader Service Card

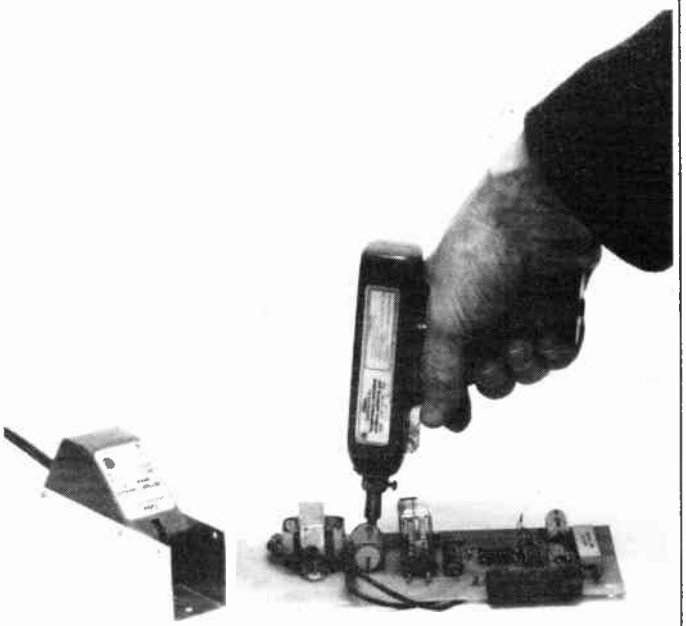

Handheld Thermometers

The 400 series of Beckman handheld thermometers offer fast response coupled with high repeatability in surface, air or immersion measurements.

The Model 450K sports a 2,000 hour batter life while models 400K and 440K feature "Auto-Off" to extend battery life.

Interchangeable probes simplify use and provide a versatile system with one basic model. Probes are available in Type K thermocouple, platinum RTD and thermistors types.

The Model 440K features ±0.3% accuracy, 1° resolution and switchable °F/°C. The 445K has an accuracy of ±0.2%, 1°/0.1° autoranging and a Min/Max reading.

The 450K, 450PT and 450TH feature ±0.1% accuracy, 0.1° resolution to 399.0°F (203°C) and Data Hold. These units are also capable of using Type J,K,T,E thermocouples, Platinum RTD or thermistor types.

For more information on the 400 Series of Beckman thermometers contact BCS Electronics, 980 Alness Street, Unit 7, Downsview, Ontario M3J 2S2 (416) 661-5585.

Circle No. 76 on Reader Service Card

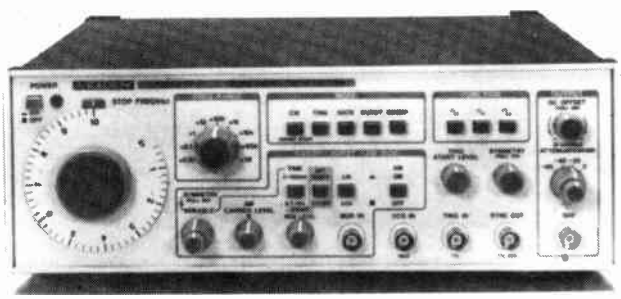

10MHz Sweep/Function

The Leader Model 1310 is designed for a wide variety of research and development, service and educational needs.

Signals provided by the unit are: sine, square, triangle, pulse and ramp. Operating modes include continuous wave, triggered gate, burst, linear and logarithmic sweep, giving the operator the flexibility to use this generator in virtually any signal source or substitution application.

Versatile output controls enable all types of signal conditions to be established such as different bias levels for amplifier work. The outputs may also be frequency or amplitude modulated by an external signal.

For more information contact Omnitronix Ltd., 2410 Dunwin Drive, Unit 4, Mississauga, Ontario L5L 1J9 (416) 828- 6221.

Circle No. 77 on Reader Service Card

World Radio History

Car Alarm

Protect your car and its contents with this cheap and simple alarm

By Bob Noyes

The number of car thefts increases daily and the old adage 'lock it' is a little outdated as car thieves seem to be able to open, steal from or even drive away just about any car they choose.

In order to protect what is probably the second largest investment the average family makes, some further protection is required.

Auto theft, as the police call it, takes two forms – breaking into a car to steal from it (commonly for items such as cassette decks etc) and the actual theft of the car. Some protection against both is necessary.

Although at first glance, these requirements seem simple enough, other practical factors need to be considered which complicate the issue – for instance how to switch it on and off. Drilling holes in the outside bodywork of the car is out of the question because this tends to introduce rust round the switch. It will also get spattered with mud and spray from passing vehicles making the switch inoperative after a time.

Magnetic key fobs and infra red controllers, at first glance look like a possible way of actuating and deactuating from outside the car, but in practice needs to be used in one position around the car and this is not always easy when parked in awkward places. Both systems add to the time taken by the driver to gain access to the car, something not appreciated in the rain.

The only practical way is a delayed exit and entry but this can introduce a period when a would-be car radio thief has broken in and started hacking away at the wiring of the radio before the alarm sounds. Although the radio is unlikely to be removed in this time, a great deal of damage can be done.

The alarm described here is of the delayed entry and exit type but has the added advantage that when the alarm has been tripped by opening the door or trunk an internal buzzer sounds. This, although not very loud, indicates than an alarm has been set off and something else is about to happen. This should be enough to deter a thief as the last thing he wants is to be seen around a car with an alarm sounding.

Another important factor in an alarm is what form the output takes. Most commercial alarms sound their horns and lights intermittently. This, although very effective, doesn't do much for the horn, lights or battery as these draw an enormous amount of power and are usually controlled by a relay whose contacts arc and spark when switching these currents.

The contacts can weld themselves together sounding the horn and the lights continuously until the battery is flat. The alarm timer which all alarms must have cannot cancel a welded relay! As well as the possible damage because of the high currents, thick and bulky hard to handle wires need to be used. For safety, the alarm switch should switch off all power to the alarm and the supply to the lights and horns used when controlled by the alarm. This would mean a switch capable of 25A or so and not many alarms on the market supply such switches.

To eliminate this problem the sound output is generated by rotary siren having a maximum current consumption of 1.2A. This allows the whole installation to be fused at 2A so much thinner wires can be used.

As a secondary line of defence, the car can be immobilized when the alarm is switched on. One of two methods can be used. If the car is fitted with standard mechanical points, a capacitor can be switched in across them. The value should be in excess of 22u but with a working voltage of 600V or more. This is switched into circuit by an independent set of contacts on the alarm switch.

In most modern cars an optical or magnetic sensing system is used in place of the points. In these cases it is best to leave well alone as damage can be caused by connecting a capacitor in the wrong place so a switch is placed into the 12V supply side of the electronic ignition module. This can be found using a meter or by following the cars' circuit diagram. Again it is wired back to the alarm key switch.

Operation

On leaving the car the alarm is activated by the key switch. This allows about seven seconds to get out and shut the door. After this time the alarm becomes active and is indicated by the exit delay LED extinguishing (it comes on when the alarm is switched on). The alarm is now active and opening the

World Radio History

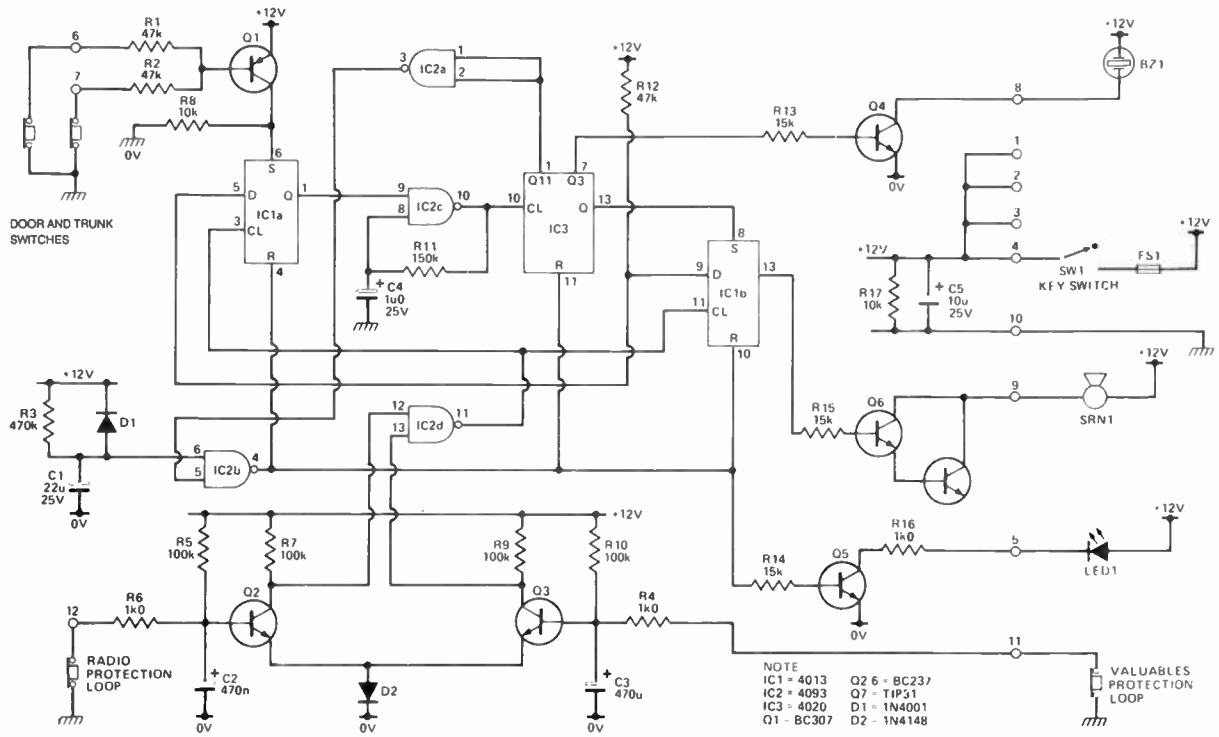

Fig. 1. the circuit diagram of the car alarm.

door will start the following sequence which once started cannot be stopped by shutting the door. Only the key switch will stop it.

The internal buzzer sounds eight times over about a five second period. During this time the alarm should be de- activated by the key switch. Failure to do this will sound the main siren. The siren sounds for approximately one and a half minutes. It will then shut off and reset the alarm. If the door is left open the sequence will start again and will not stop unless the key switch is turned off or the door is shut and then only at the end of the sequence.

If the radio or any other equipment is tampered with and the ground connection removed, the siren will sound immediately.

Instead of the radio, a trailer can also be protected when connected to a car and parked. A loop connection is made around the trailer frame. This can be made with a plug and socket arrangement in such a way that the plug must be removed or the wires cut in order to steal the trailer. In both cases, the alarm will sound instantly. Of course provision must be made to short the wires together when the trailer is not being towed. This can be achieved with a shorting plug kept in the socket when not protecting the trailer.

The same method can be used to protect such articles as cases and the like carried in the car. The set up must be that to remove the protected articles, the plug must be undone or the cable cut, similar to the type of thing used in shops to protect goods on view.

Although primarily intended for cars, this alarm is ideal for RV trailers as the CMOS integrated circuits draw very little current and can be left on for several months without flattening the battery. The delayed circuit can be fitted to the main doors. The instant circuit can be connected to the wind up leg of the RV so that with the leg down the contacts are made (use a mercury tilt switch). When the leg is wound up to drive the RV away the tilt switch

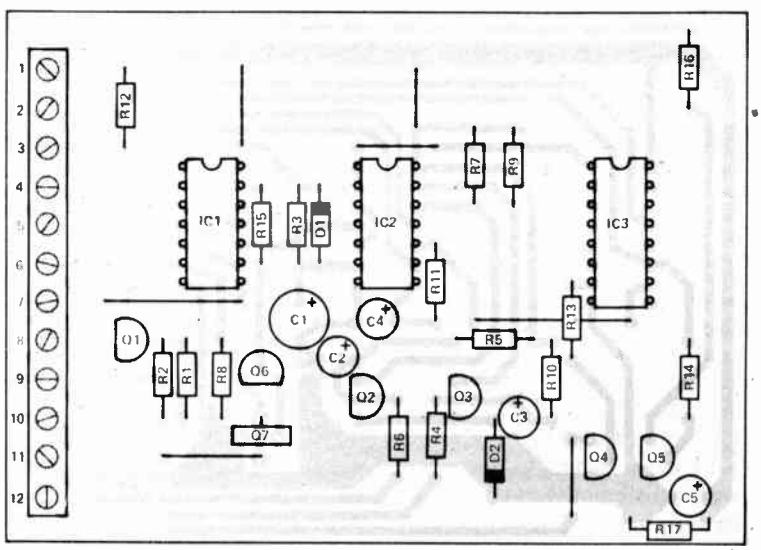

Fig. 2 The component overlay of the alarm PCB.

World Radio History

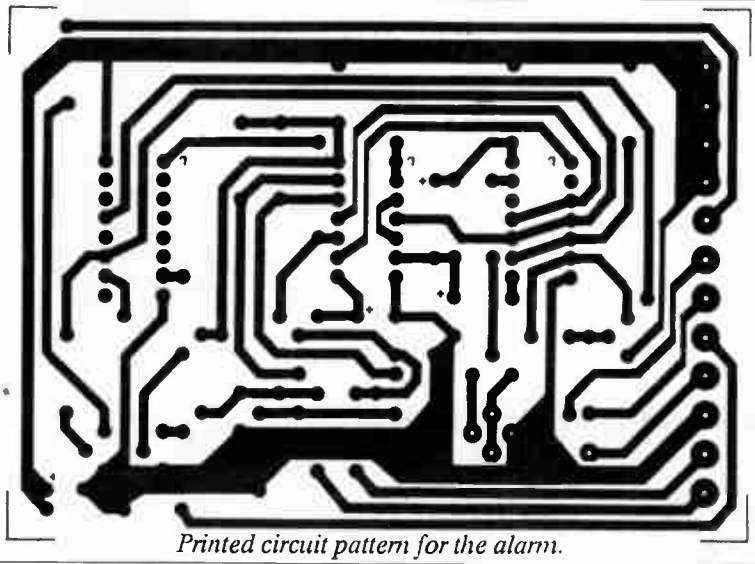

Printed circuit pattern for the alarm.

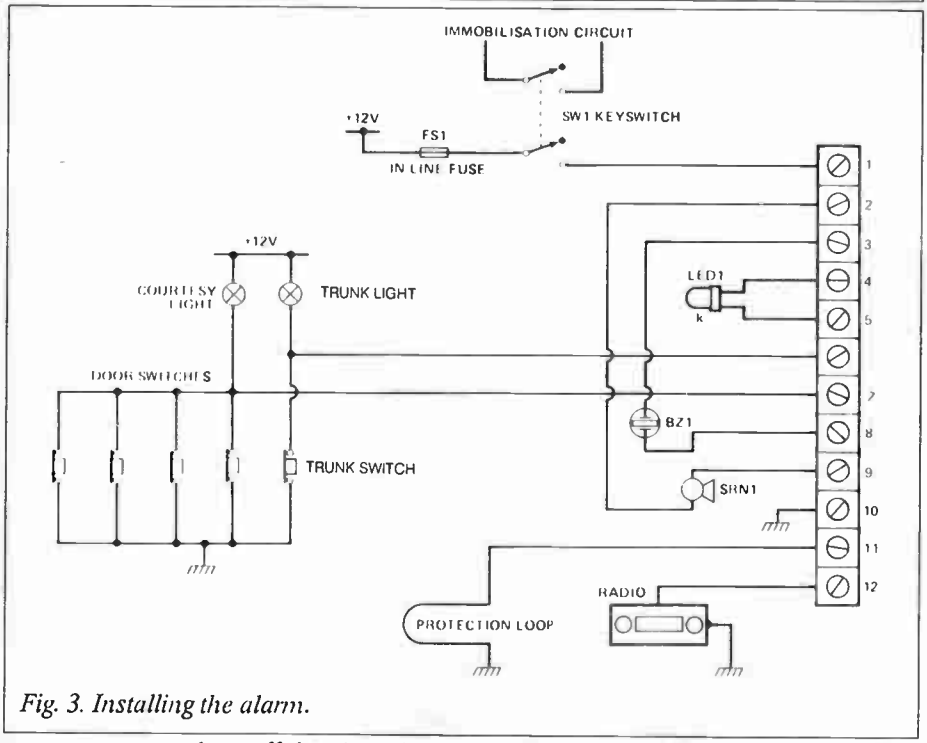

Fig. 3. Installing the alarm.

contacts open and set off the alarm immediately.

How It Works

Fig. 1 shows the full circuit diagram of the alarm. When the alarm is on and the exit delay timed out, opening any one of the doors or trunk will close the light switches and turn on Q1 via R2 or R1. This produces a high on IC1a and will set the latch causing the output to go high starting the oscillator (IC2c) which runs at about 25Hz. Pulses from this are fed to a binary counter IC3, the outputs of which control the following sequence of events. After eight pulses from the oscillator, Q3, goes high and is high for eight more pulses before going low and repeats this throughout the sequence. The Q3 output is taken to Q4 via R13 to give current amplification and power a small buzzer. This is the internal buzzer which sounds eight times before the main siren. After 128 clock pulses, Q7 goes high and sets latch IC1b. This is the siren latch, and when set it causes the siren to sound via R15 supplying Q6, Q7 which are wired in a Darlington configuration.

After a total 2048 clock pulses, Q1 1 becomes high which is inverted by IC2a. The resulting low on IC2b causes a short reset pulse which resets IC1a, IC3 and IC1b. The alarm has now gone through a complete sequence and is ready to be set off again should the need arise.

The delayed exit is produced by IC2b. After switch-on C1 is slowly charged via R3 while charging IC2 pin 4 is high. This turns on Q5 via R14 to illuminate the exit LED via its current limit resistor R16. When C1 has charged to about eight volts, this will cause pin 4 to fall to 0 volts, a high must appear on pin 5 due to the counter being rest causing a low on Q1 1 which is inverted by IC2a.

The delay exit time may be increased by increasing the value of R3. D1 provides a discharge path for C1 when the alarm is switched off. R17 provides the load for the discharge path.

The delayed entry is provided by the 128 clock pulses required to set the siren state during which time the alarm should be turned off. By this method of sequencing various time configurations may be achieved by simply selecting the outputs from IC3 to lengthen or shorten the timings. For example, taking the rest from Q1 1 (pin 1) to Q1 2 (pin 2) will double the length of time the siren sounds to nearly three minutes. *continued on page 54*

Parts List

Resistors (all 1/4W, 5%)

R1,2,12	47k
R3	470k
R4,6,16	1k0
R5,7,9,10	100k
R8,17	10k
R11	150k
R13-15	15k

Capacitors

C1	22u 25V tantalum
C2,3	470n 25V tantalum
C4	1u0 25V tantalum
C5	10u 25V tantalum

Semiconductors

IC1	4013
IC2	4093
IC3	4020
Q1	2N6015
Q2-5	2N5825
Q6	TIP31
D1	1N4001
D2	1N4148
LED1	Red Led

Miscellaneous

BZ1	12V Piezo Buzzer
FS1	2A inline fuse
SRN1	12V siren or bell
SW1	DPDT Key Switch

PCB; plastic case, connectors and cable; 12 way terminal strip; extra switches on doors and trunk if necessary; nuts and bolts.

World Radio History

MARKET PLACE

For Advertising Information Call (416) 445-5600

AD-PCM method solid state Tapeless Recorder Kit.

- Max recording time 32 sec. (at 32K BPS) with 256K x 4 pcs. D-Ram controlled by new technological 60 pin LSI.
- 500mW audio Amp and 600ohm/10Kohm MIC Amp built-in

Assembled & Tested (without SP. MIC) ..... $ 98.00

Voice (speech) recognition 5CH (Max. 20CH) Control SW Kit

- Can control 5 relays on/off with your voice
- State-of-the-art special 60 pin LSI control
- With additional circuit can extend more 15CH.

Complete Kit with 5 Relays $149.00

Digital Capacitance Meter Kit

- 3 digit large size LED display 6V/9V battery operation.
- Wide range 10pF to 999uF, Accuracy 2%

Complete Kit (without case) ..... $ 39.00

Max 500MHz, 8-digit Frequency Counter Kit

- 10Hz to 500MHz, 6 combination measurements
- Up to 10MHz 30mV, 10MHz to 500MHz 100mV, Accuracy 0.005%

Complete Kit (without case) $145.00

Frequency Counter Adapter for your multi-meter

- Change your multi-meter into handy frequency counter.
- 5Hz to 200KHz, with optional pre-scaler. Max. 200 MHz.
- Accuracy 1%, sensitivity 100mV
- Comes with X'tal Calibrater Unit

Complete Kit (without case) ..... $ 45.00

200MHz Universal Pre-Scaler Kit

- 200MHz 80mV, 1/100, 1/1000 divider

Complete Kit (without case) ..... $ 29.00

12CH (Max 32CH) Remote-Control Switch Kit

- Special function 1-chip CPU control
- A-type. Infrared Tx, Rx. Max. distance 40 feet.
- B-type. Wireless FM. Tx, Rx. Max. distance 300 feet.

Complete Kit — A-type ..... $87.00 B-Type $145.00

Stepping motor driver kit comes with mini motor

- Good for drive small motor. Max. 12V 1.2A, 3000pps.
- Manual or computer control are selectable.

Special price ..... $ 68.00

High Speed EP-ROm erasing Lamp Kit.

- High intensity type. Erase 20pcs Rom in 5 to 10 minutes.
- Also, P.C. Board exposing UV Lamp sold by K.E.M.

1 set with timer ..... $ 41.98

$6.00 for shipping. Plus P.S.T. for B.C. residence. Plus C.O.D. fee, if required. We do not accept invoice orders.

K.E.M. Electronics Ltd.
Mail to Box 69126, Station (K),
Vancouver, B.C. V5K 4W4
Office 879E. Hastings, Vancouver
(604) 251-1514

PRO AUDIO and STAGE LIGHTING

- Faders all values and tapers.
- Rotary and trim pots. - * Knobs all sizes.
- NEUTRIK audio connectors. - * Chemicals.
- Resistors and capacitors all values.
- Led's, diodes, transistors and IC's.
- Tone generators 1 hz-100 khz.
- Pink noise generator. - * Summing, line and preamps.
- Level indicators. - * LCD panel meters
- Phantom power supply circuit boards.
- Regulated power supply circuit boards for all Radio Shack and Hammond 161 and 229 series transformers. - * Power supply kits.
- Low distortion digitally or manual controlled auido attenuators.
- High headroom noiseless electronic switches with remote.
- 3 wire communication module compatible with others.
- RFI filter chokes 10-200amps. - * Triacs 15-40A. SCR's 3-150A.
- 1,4 and 8 ch. 120 vac dimmer cards.
- 4,6 and 10 ch. solid state relay boards 15 - 40A RMS.
- 10 scene 12 ch. programmable solid state relay controller with ch. bump and push on push off switches. - * 2-8 ch. chaser board with speed and level control.
- 24 ch. random generator.
- 4 ch. color organ with active filters.
- Rate controlled auto fade with presets and remote control.
- 4 wire analog multiplexer compatible with others.
- All circuits operate at standard levels.

Send $2.00 (refunded with initial order) for compelte catalog with pricing and detailed specs of circuits to:

PATOR COMPONENTS
P.O. Box 81037, S. Burnaby, B.C. V5H 4K1

Classifieds

ADVERTISING FORM

Rates: The basic one time insertion rate is $1.50 per word (Minimum 25 words) The rate of $3.50 per word allows your advertisement to run in all three publications (Computing Now!, Electronics Today, and Computers in Education) Headings, logos and reverse advertisements are available for an additional $30.00

Special discount rates are available for multiple insertions They are as follows

25% for 12 consecutive insertions
15% for 6 consecutive insertions
10% for 3 consecutive insertions

These rates apply only to the prepayment of the entire sum

Send a cheque (deduct applicable discounts) along with this order form

Please contact **Moorshead Publications**
1300 Don Mills Rd., Don Mills, Ontario M3B-3M8
(416) 445-5600

DO DREAMS COME TRUE?

SALES MANAGEMENT TRAINEES AND SALES REPS

Dreams can come true if you "Get Active".

Our remuneration and benefits package is well above average. Our Managers and Sales Representatives have unlimited earnings potential! If you dream of the "good life", we can help you realize that goal.

Due to our accelerated expansion program, we have immediate openings for qualified candidates to be trained to manage our branches. Our comprehensive training program will teach you all that is necessary to run them.

Active

The entrepreneurial spirit lives on at Active Electronics. Active is one of the fastest growing electronic retailer/MRO distributors in North America. We plan on opening new branches from coast to coast, and need management trainees and sales reps to help us grow. This is a once in a lifetime opportunity that will appeal to the person who would like the next best thing to running one's own business!

If you are an above average person, with a great deal of ambition and drive, prior experience in sales, telemarketing, management, or electronics, we would like to hear from you!

Forward your resume to:

Hank Boyer, General Manager
Active Electronics
237 Hymus Boulevard
Pointe Claire, PQ H9R 5C7

World Radio History

Hi-Fi Power Meter

Build this inexpensive power meter for your audio systems

By Paul Chappell

When faced with the task of designing a power amplifier, the variety of different approaches that can be taken is almost overwhelming.

If the load to the amplifier is known, the power can be derived from the voltage alone. The very simplest method is to assume that the load is a pure resistance, to rectify the output voltage and apply it to a single quadrant square-law circuit, (since power is proportional to the square of the voltage for a given resistive load) and then to smooth the output and use it to drive a meter.

If the meter movement is sensitive enough, the entire circuit can be made from passive components and will divert very little power from the loudspeakers.

This approach relies for its accuracy on two factors. First of all it assumes the loudspeaker impedance is close enough to a pure, fixed resistance for the assumption to be valid. The second assumption is that a reasonably accurate square-law circuit can be made. In practise, reasonable results can be achieved, and this type of design has the advantages of being simple, cheap and reliable. A practical circuit along these lines will be given later on.

This is all very well for PAs, music centres and the like but for top flight hi-fi or for accurate power monitoring, something considerably better is called for. If the current is measured as well as the voltage, there is no need to make any assumptions about the loudspeakers. The circuit can take into account the characteristics of the load. But how?

What do we do with the current and voltage signals when we've got them? Multiply them? Find the RMS values and multiply? Find the average and multiply? It depends on exactly what we're trying to measure – which is not as silly a question as it sounds.

Power To People

For a resistive load there's no doubt about what we want to measure. However, for a load with a reactive component the case is not so clear cut. Fig. 1a shows the voltage, current and instantaneous power waveforms for a resistive load with a sinusoidal voltage applied. The power (p) varies from a peak when v and i are both at peak positive or negative values down to zero when v and i are both zero. However, it is always positive.

The average power delivered to the load is shown by the dotted line. This is the mean value of the instantaneous power curve. It can be calculated by taking the product of the instantaneous current and voltage over a whole number of half cycles and averaging the result, or by multiplying together the RMS voltage and current, or from the mean squared value of the voltage divided by the load resistance, and so on. All these methods give exactly the same result.

Fig. 1b shows the situation where the load is a pure reactance – it can be a capacitor or inductor depending on which of the waveforms you take to represent v and which to be i.

In either case the instantaneous power varies symmetrically about zero. On the positive parts of the curve, energy is being stored by the load. On the negative part it's being returned to the source. The load does not dissipate any energy and the mean value of the power curve is zero.

However, if we multiply the RMS voltage and current in this case we get

World Radio History

exactly the same result as for the resistive load. One way of calculating power gives the answer zero another gives a positive value. Which is correct?

The answer is that it depends on exactly what you are trying to measure. If you want to know the average power delivered to the load (the 'real' power, measured in watts) the answer is zero. On the other hand, suppose you were to connect a capacitor directly across an AC transformer. The current flow in the windings would have just the same heating effect as for a resistive load. There is a limit to the size of capacitor you can connect directly across a transformer before it burns out! Clearly the 'real' power is not the whole story.

The effect on the transformer is measured by the product of RMS voltage and current. It is called the 'apparent' power and is measured in volt-amperes (VA) – a unit you'll no doubt have come across in transformer specifications.

Fig. 1c shows the more general situation where the load has resistive and reactive components, as in the case of a hi-fi loudspeaker. Here, the power situation is even worse – we can distinguish three different kinds.

The product of RMS voltage and current still gives the apparent power (VA), the mean of the power waveform will give the real power (watts). Now the difference between the two gives yet another power reading – the 'reactive' power, measured in 'volt-amperes reactive' (VAR).

The apparent power, then, is made up of two components: the real power delivered to the load and the reactive power which shunts backwards and forwards between load and source. So, what should a power meter measure?

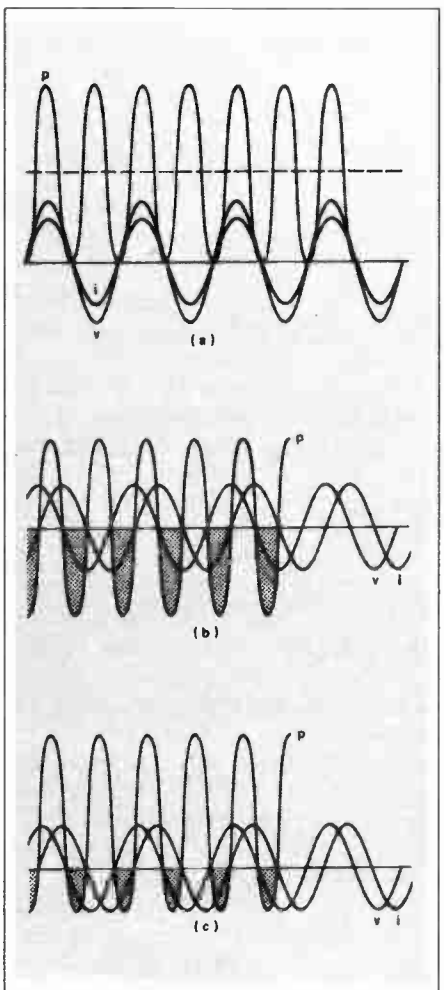

Fig. 1 Voltage, current and power waveforms for (a) a resistive load

The Old Bill

If we asked the electric utility, we'd get an answer without hesitation – apparent power is the one to go for. It's bigger than either of the other two and the choice can be justified by saying that even if the energy transferred from the generators to the customer's load is less than the meter reading, the 'extra' power shunted back and forth means that heavier gauge wires and bulkier transformers are needed.

The utility does indeed charge for apparent power. As a slight digression, factories are perfectly well aware that they can be charged for energy they haven't used and go to great lengths to apply power factor correction to their supplies.

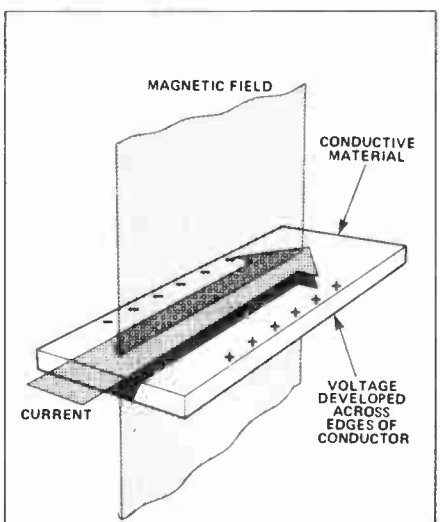

The most common cause of trouble is large electric motors which have a high inductive component and the solution is to connect a whopping great capacitor across the AC – just like an amplifier's Zobel network but on a much, much larger scale.

The result is that the factory appears more like a pure resistance to the power supply and the reactive power circulates between the capacitor and the motors.

Unlikely as it sounds, this measure will often give a considerable reduction in the electricity bills.

I should point out that the capacitors used are not the type you buy from your corner shop. They have to withstand continuous AC voltage and huge currents and are therefore very costly and bulky. Four household supplies it just isn't worth the time and effort. Also, since different gadgets are being turned on and off at various times, there's no sensible way to compensate for them.

To return to the hi-fi power meter, the most sensible thing to measure seems to be the power that is actually used by your loudspeakers – the real power. It may not be quite so flattering to your amplifier as apparent power but it's a realistic indication of the power used by the loudspeakers. How much of this actually gets converted to sound rather than heat is a matter between you and the hi-fi manufacturer.

The method for calculating real power applies to any old waveform, and this is:

The voltage and current signals are continuously multiplied to give the instantaneous power, then the resulting power waveform is average over a number of cycles to give the mean power.

The four quadrant multiplier is needed because the areas below zero on the power waveform represent energy returned to the amplifier to be dissipated in the output transistors. This must be subtracted from the area above zero which represents the total energy supplied (some of which is

World Radio History

Acceptability

Having decided what we want to measure and how to go about it, the next question is acceptability. What will make hi-fi enthusiasts feel happy to connect to their amplifiers? My modest aim has been to produce a circuit which will introduce no distortion whatsoever into top-flight hi-fi equipment. Anybody who will be happy with this approach should be more than satisfied with the circuit.

Tapping a voltage reading from the amplifier output presents no particular problem. The main question is how to derive a suitable current signal. Introducing a resistor into one of the speaker leads is the usual solution. However, although the disturbance caused by a 0.1 ohm resistor would be negligible in all but the very finest equipment, a better approach should be sought if possible.

My first thought on the subject was to use a Hall effect device to measure the current. If you are not familiar with the Hall effect, Fig. 2 shows the general idea. The rectangle is a strip of some kind of conductive material. A magnetic field at right angles to the strip will produce a voltage at the edges.

The effect is exhibited by any conductor whatsoever, even the track on a PCB but is generally so small as to be unmeasurable. Some semiconductor materials produce relatively high voltages for fairly modest flux densities and can be obtained in IC form, often with internal amplifiers.

One of the loudspeaker leads running alongside such an IC would have been the ideal way to derive a current signal without disturbing the audio signal. Unfortunately, the devices I tried were all far too noisy and insensitive to obtain clean signal, so it was back to the drawing board.

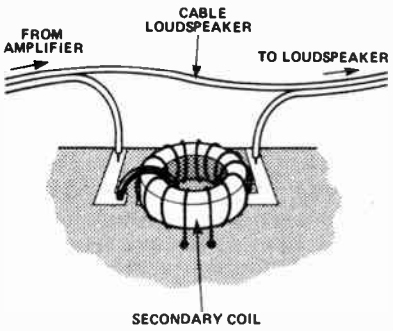

Fig. 3 The current transformer approach.

The Long And Winding Road

The solution that eventually produced excellent results was a current transformer (Fig. 3). One of the speaker leads is broken and forms a half turn around a suitable toroid via a single hoop of wire. The secondary coil is wound around the toroid giving a step-down in current of about 200:1.

For best performance (and to avoid reflecting the slightest suspension of anything unwanted back into the primary circuit) the transformer must be terminated with a very small resistance – a fraction of an ohm if possible. Since high performance current buffers don't exist in IC form, this approach leads to some interesting problems, but space won't allow me to elaborate at this time.

Budget Power Meter

The circuit of the budget power meter is shown in Fig. 4. It depends entirely on the voltage for the readings, and draws a small current from the amplifier output to drive the meter. The rectifiers are used to produce an approximation to a square law, and also to rectify the signal for the meter. Two different speaker impedances can be selected by SW1 and two different power ranges (0-10W and 0-100W) by SW2.

The component overlay for the project is shown in Fig. 5. There is so little on the PCB that it should be almost impossible to make a mistake. If you use the specified meters, the PCBs can be mounted on the back. Otherwise, they can be fixed to the case by means of the screw holes.

The meters can be back-lit, but this means giving the meter a power supply it would not otherwise need, so it's up to you whether or not you think it worthwhile. Incandescent bulbs will give better result than LEDs. You can probably get away with using a small transformer driving a few bulbs in series.

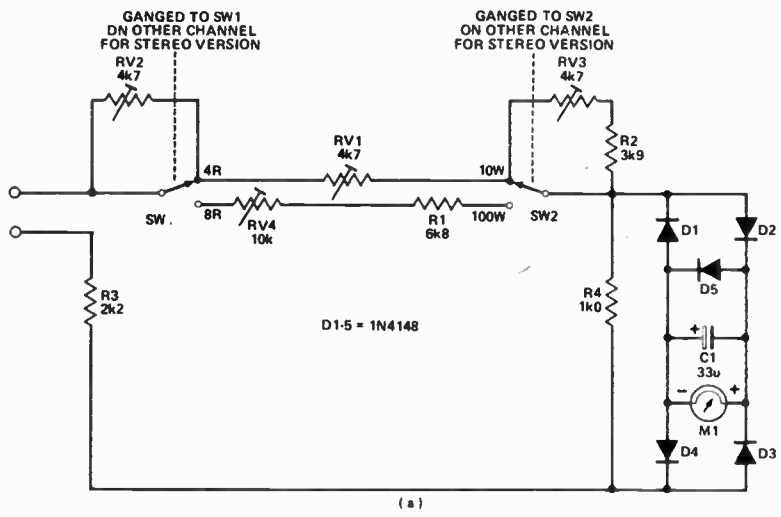

Fig 4. (a) the circuit diagram of the budget power meter

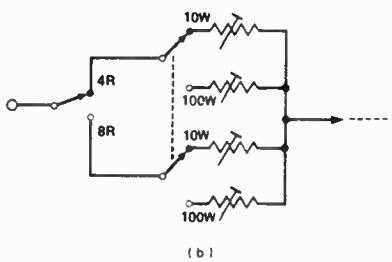

(b) alternative switching arrangement for totally independent range adjustment.

World Radio History

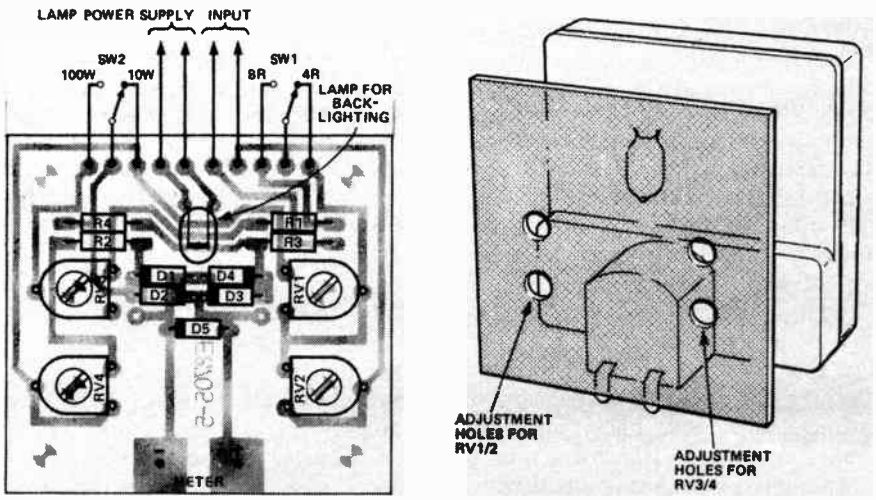

Fig. 5 The component overlay for the budget power meter.

Calibration

You will need a sine wave generator and a multimeter. If you haven't got a signal generator, the circuit of Fig. 6 will do the trick. If you haven't got a multimeter, go out and buy one! (How on earth do you manage to test your circuits without it?).

Disconnect the speakers from your amplifier and connect a 1K0 resistor across the output of one channel instead. Feed the sine wave into a suitable input on your amplifier (the AUX input will probably be best) and connect the power meter across the 1K0 resistor. Connect your multimeter on AC volts range across the resistor too.

Set the power meter switches to 4 ohms, 10 Watts and then adjust the volume control of your amplifier until the meter reads 6.3V. Adjust RV1 until the power meter reads 10W exactly.

Set the power meter to 8 ohms, and adjust the amplifier volume control until the meter reads 8.9V. Adjust RV2 until the meter reads 10W.

For 4 ohms, 100W, set the multimeter to 28.3V and the power meter to a reading of 10 (which once again represents 100W).

This completes the calibration. There is, of course, no reason why you shouldn't expand the number of ranges and speaker impedances to suit your own purpose, although the PCB only allows for two of each.

How It Works

D1 to D4 form a bridge rectifier which provides drive of a suitable polarity for the meter. The presence of diodes gives a degree of non-linearity to the current to voltage relationship with a little imagination we can pretend it's something like a square law relationship.

To make the best of the diode characteristics, the more sensitive the meter movement the better. If you choose a more sensitive type, you should reduce the value of R4 and leave all other components values the same.

The network of resistors around SW1 and SW2 simply pad the voltage divided to cope with different input ranges. The arrangement looks unnecessarily complicated but was devised to avoid the need for a double gang switch in each channel. With the arrangement shown, two DPDT switches can be used for the stereo version. Since the pot settings are not entirely independent, it's important to calibrate the meter in the order described in the text – RV1 first, RV2 next, and so on.

D5 gives protection to the meter movement against the overload. ■

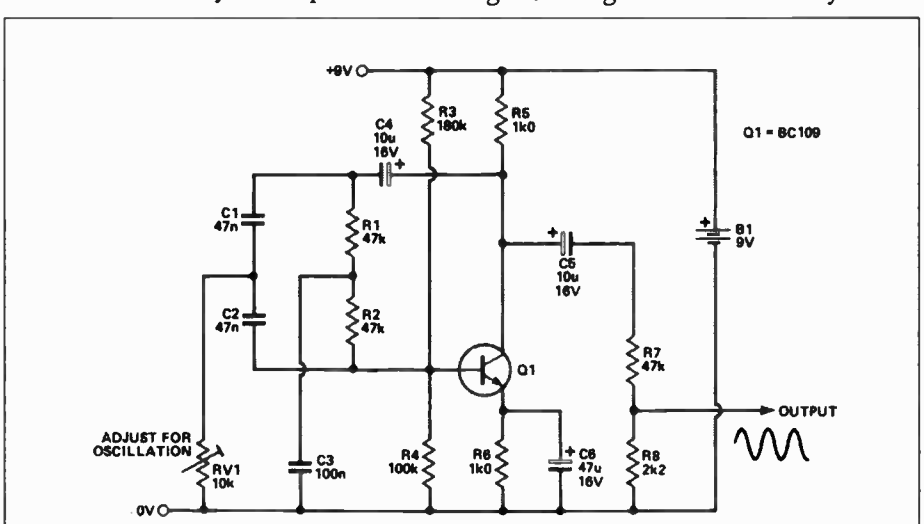

Fig. 6 A simple signal generator circuit for calibrating the power meter.

Parts List

Resistors

R1	6k8
R2	3k9
R3	2k2
R4	1k0
RV1,2,3	4k7
RV4	10k

Capacitors

C1	33uF 16V elect.

Semiconductors

D1-D5	1N4148

Miscellaneous

PCB; any fairly sensitive current meter movement, scaled 0 - 10; optional components for backlighting: bulbs, transformer; and case.

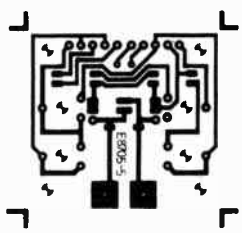

The PCB pattern for the power meter

World Radio History

DTP DESKTOP PUBLISHING DIGEST

IF YOU'RE LOOKING
FOR PEOPLE
WHO WANT TO HEAR
ABOUT DESKTOP
PUBLISHING PRODUCTS...
WE'VE ALREADY FOUND THEM!

Moorshead Publications

Contact Allan Wheeler at
(416) 445-5600.

Photographix
A division of Photoproducts Ltd.

New Standard in High Resolution Laser Printing

Obtain typographic quality output on plain paper with the Printware 720 IQ Laser Imager, the industry's first 1200 x 600 dpi printer.

The Printware 720 IQ Images 720,000 dots per square inch on your page - eight times more dots than a 300 dpi laser printer. As a result, text and graphics appear crisp and sharp. And the pages you create are aesthetically pleasing and highly readable.

And yet, the superior resolution you obtain from the Printware system does not compromise overall performance. The 720 IQ is an efficient workhorse for single or multiple PC configurations. It prints your integrated text and graphic layouts at speeds of up to 8 pages per minute, and handles a heavy volume of 20,000 pages per month. The 720 IQ features a "straight-through" paper path which reduces paper jams and image distortions. The paper transport can accomodate a wide range of paper sizes and stock including labels, transparencies and cover stock.

The 1200 HD Image Processor, an intelligent front-end controller, houses three powerful microprocessors which handle your HP Laserjet and PostScript-compatible files.

Print a 4 point font, or fill your entire page with a single character. The font outline masters stored within the 1200 HD processor can generate any point size on demand, providing you with maximum flexibility. Printware makes the best of both worlds possible.

Enjoy the convenience associated with laser technology, and the quality you expect from a typesetter. Make the 720 IQ your perfect choice for creating electronic originals and camera-ready masters.

Printware . . . setting the new quality standard in laser printed pages.

PHOTOGRAPHIX
400-450 Matheson Blvd. E., Unit 30
Mississauga, Ontario L4Z 1N8
Tel: (416) 890-1303 Fax: (416) 890-6438

Circle No. 96 on Reader Service Card

PagePerfect by IMSI Puts You In Command!

Imagine powerful **layout** features that are easy to learn and easy to use; built in **graphics editing/scanning;** advanced word processing capability that accepts popular word parocessing files: (WordStar, MS-Word, Word Perfect, ASC11), and includes keyboard commands that behave like WordStar and MultiMate; as well as superb **file management** all in one package. It's not a dream, it's **Page Perfect,** and it's designed for you to enter the desktop publishing field with ease! IMSI bridges the gap between functional desktop publishing and word processing. Simple keystrokes, a familiar keyboard oriented context, and unique layout features offer you the ability to be both creative and productive.

Circle No. 97 on Reader Service Card

Desktop Publisher's Graphics for Image Editing

IMSI introduces this high-performance graphics editor to benefit your DTP needs:

* Clean up your scanned images or fonts
* Pixel editing capability, 9 zoom levels
* Unsurpassed drawing tools, image scaling, rotation, cut and paste Overlay text at any angle, 21 font styles most with no size limits
* Text importing from ASC11 files.

"Matches PC Paintbrush feature for feature...has features even Publisher's Paintbrush hasn't thought of ....less expensive!...It's a tremendous graphics tool!...I recommend it to the savvy computer user who will find its advanced features stimulating and useful. "DTP with Style 1987.

Circle No. 98 on Reader Service Card

World Radio History

Car Alarm *continued from page 47*

If an attempt is made to remove the radio or other protected items, the siren sounds instantly. This is done by using the latches IC1a, IC1b. Pins 11 and 12 of the alarm are held low by connecting them to the chassis of the radio or connecting them to 0 volts via the loops described earlier. If one of these two connections is removed either Q2 or Q3 is turned on by their bias resistors R5, R9 respectively. This in turn puts a low on IC2d pins 12 or 13 which causes the output pin 11 to go high. This low to high transition is used to clock the two latches IC1a, b. The circuit now follows the same count routine as before except that the siren latch has already been set eliminating the 128 clock pulse delay, but it is turned off in the same way after 2048 clock pulses.

The timings rely on the oscillator running at about 25Hz. The speed of this oscillator can be increased by reducing R11 and slowed down by increasing its value. However, do not reduce below 15k as this may damage the IC.

Installation

Fig 2. shows the overlay for the alarm PCB. Construction should cause no particular problems.

Before fitting the alarm, it should be fully tested on the bench using a power supply and simple switches on pins 6, 7, 11, 12. To simulate the car courtesy light, connect a 47k resistor between pins 1 and 6 of the alarm. This will hold off Q1 unless turned on by a low on pins 6 or 7.

When happy that the alarm works under all possible valid switch configurations it should be considered ready to fit. As it is going to stay in the car (which can be a hostile environment) the PCB should be fully cleaned and sprayed with a PCB protective varnish to prevent the copper tracks from being eaten away by dampness.

Test all points of the car's electrical system that are to be used with a meter to check they perform as expected. It is a good idea to disconnect the positive side of the battery while fitting the alarm to prevent any accidental shorts. ■

Advertisers' Index

Active Componants 48
Allan Crawford Associates 56
BCS Electronics Ltd. 21
Best Systems Corporation of Canada Inc. 2, 3
Computer Parts Galore 14
Daetron 11
Digital Research Computers 25
ECG Canada Inc. 54
Ground Plus Electronics Inc. 36
I.M. Instruments 25
IMSI 53
Infra Tech Ltd. 12
Kaientai Electronic Merchants 33
KB Electronics 33
McGraw Hill 13
National Technical Schools 37
Pator 48
Photographix 53
Power Control Inc. 54
Radio Shack 55
Toshiba Information Systems 4

For Advertising Information
Call (416)445-5600 Fax: 416-445-8149

Next Time You're In The Dark...

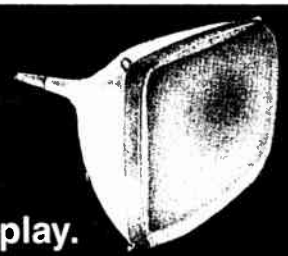

Look To ECG To Light Up Your Display.

Where do you go to replace or upgrade your specific tube, when time and cost are critical factors?

ECG CANADA INC. can supply you with the latest quality replacement display tube for virtually any terminal, at a fraction of the OEM cost, and with a limited one-year warranty. Our high-resolution colour or monochrome tubes feature the latest dark glass, direct etch options, and are available in popular colours ranging from Black & White to European Amber.

With over 3,000 tube types, ECG can supply the exact replacement for computers, medical instrumentation, surveillance equipment, and most other monitor applications. And with its complete distribution system, ECG can get one to you fast – most orders are shipped the same day they are received.

ECG CANADA INC.

Electronic Components and Systems
1928 St. Regis Blvd., Dorval,
Quebec H9P 1H6 (514) 685-5800
A North American Philips Company

ECG...We'll Show You The Light.

Circle No. 94 on Reader Service Card

NEW!

Uninterruptible Computer Power System

Complete Power Protection for Serious Computers

The new Power Control SPS protects against Power Failures, BrownOuts, Surges, Sags and Impulses. Emergency AC Power is automatically generated from the enclosed heavy duty batteries, while audible, visual and remote alarms alert the operator. Power is conditioned with surge suppressors and line filters, providing a continuous, computer grade electrical supply.

- Superior Technical Specifications
- Available in 400 watt, 800 watt and 1500 watt
- Load Transfer in less than 2 milliseconds
- Surge and Spike Protection up to 300 joules
- Battery Recharge within 4 hours
- Very Quiet Operation
- Audible and Visual Alarm Indicators
- Remote Alarm Contacts
- 12 Months Unconditional Warranty
- Manufacturing and Service in Canada

DEALER ENQUIRIES INVITED

Power Control Inc.
12 - 175 Toryork Drive Toronto Canada M9L 2Y7
Phone: 416 747-6643 FAX: 416 747-9070

Circle No. 95 on Reader Service Card

World Radio History

Standard equipment for a workbench or toolbox

Get to the bottom of any electrical problem without having to second guess causes for circuit malfunctions. Radio Shack has affordable multitesters for hobbyists, technicians, repairmen, and handymen. They accurately measure voltage, resistance and currents. So if you're looking for a dependable and reliable troubleshooter, get a multitester from Radio Shack today.

A) Save $20! 43-range multitester features range doubler, beep continuity, 50kΩ/volt, input impedance. Fuse and overload protected. 22-214*. Regular 59.95 ..... **sale 39.95**

B) Our best! Benchtop digital LCD multimeter is perfect for technicians. 31-segment analog bar graph display. Input impedance: 10 megohms/volt. 22-195 ..... **159.95**

C) 23-range multitester has full autopolarity operation, diode check function, beep continuity check. Input impedance: 10 megohoms/volt. 22-185* **99.95**

D) Pocket autoranging VOM tester. Feature packed portable that fits in your pocket. 22-171 ..... **34.95**

*Batteries not included

Radio Shack®

Sale price expires February 28, 1988

Circle No. 99 on Reader Service Card

World Radio History

Just in Time...

- Quality Test Equipment for field or bench.
- Accessories to enhance your test capability.
- GPIB Interface cards from PC to any GPIB Instruments.
- Software to control GPIB instruments and manipulate the data.
- Technical support and service.

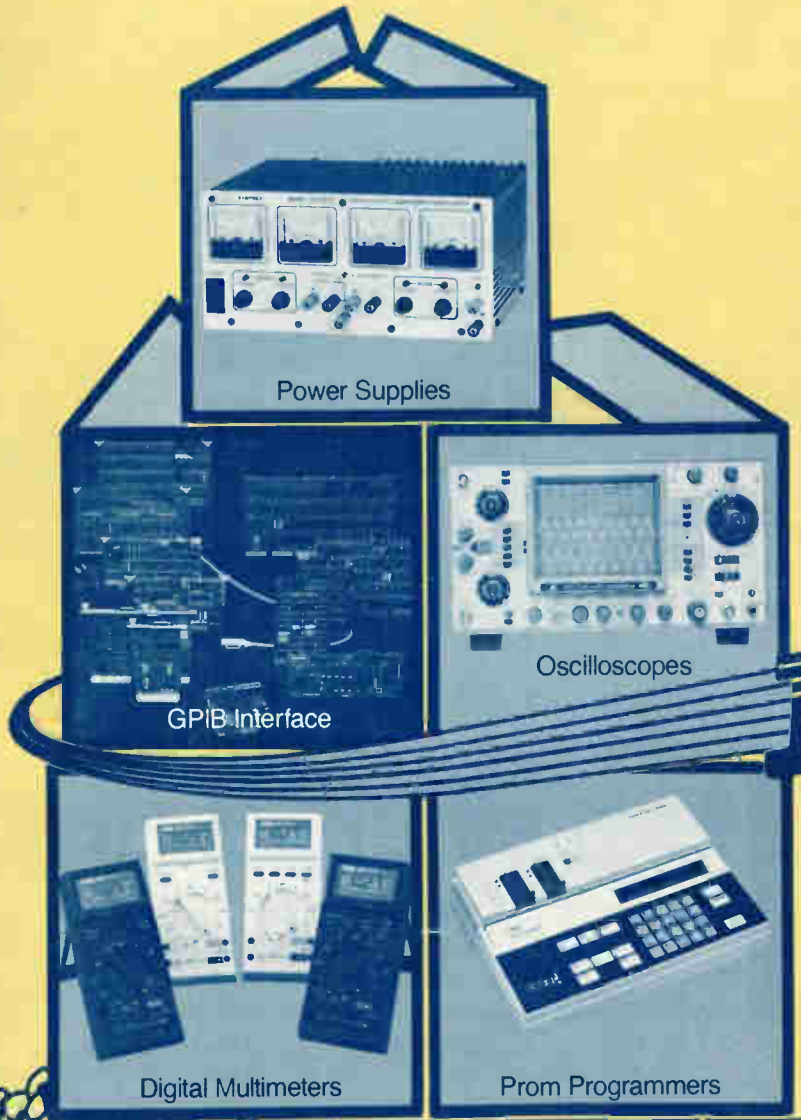

brought to you via:

JETSTOCK

Guaranteed shipment of quality test & measurement products designated JETSTOCK, within 24 hours of receiving your purchase order.

Inquire about our Corporate Customer JETSTOCK program for pre-approved purchasers.

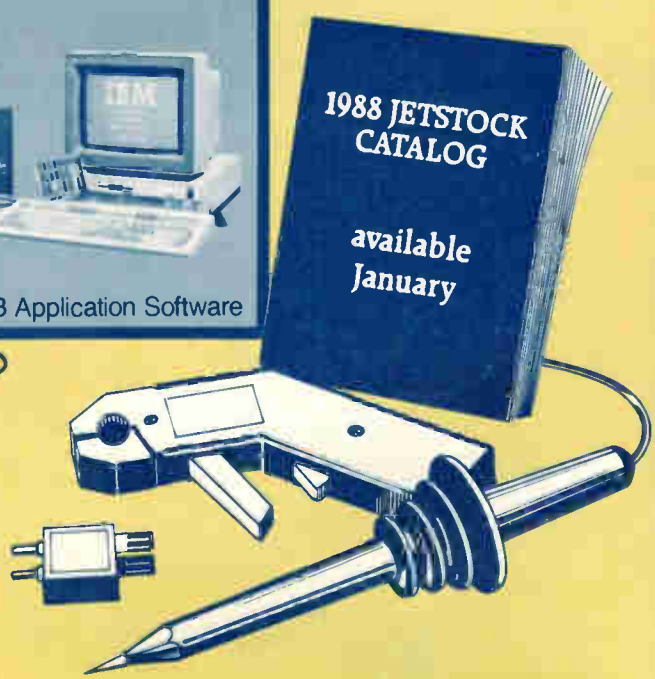

For your 1988 Jetstock Catalog send in reply card or call:

Allan Crawford Associates Ltd.
Toronto 416-890-2010 Montreal 514-747-7878 Ottawa 613-596-9300
Calgary 403-295-0822 Vancouver 604-988-2195

World Radio History