Electronics Today

$1.95

MM70924

INTERNATIONAL AUGUST 1981

INFRA-RED ALARM

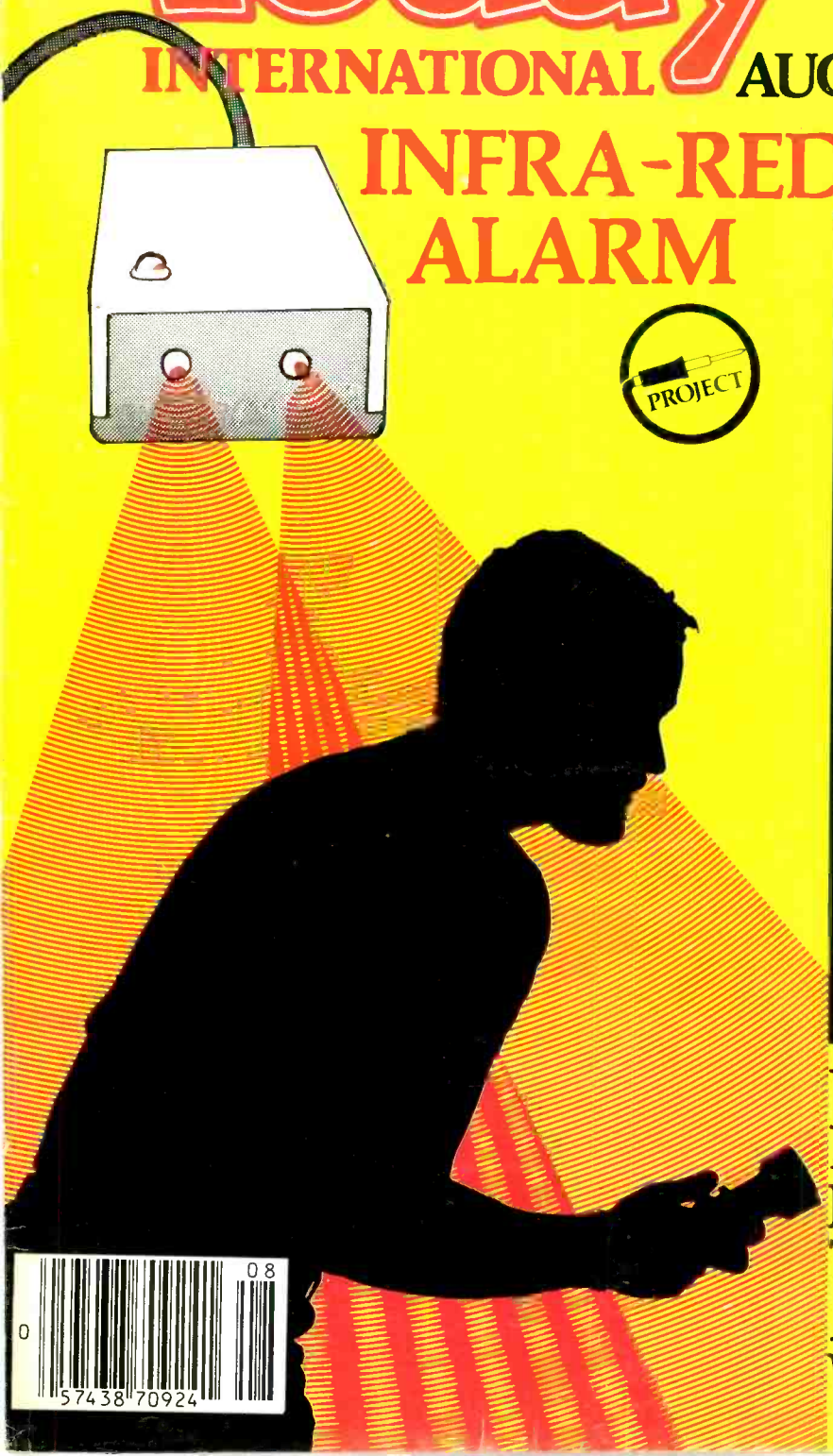

PROJECT

THE TAP SHOWN HERE IS A HOLOGRAM BUT BOTH HANDS AND THE CUP ARE REAL

HOLOGRAMS

Wired Sound PROJECT

Bench Power Supply PROJECT

Recording Tapes & Tape Recording

Anatomy of a Micro

Wein Bridge Oscillator

08
0 57438 70924

arkon electronics ltd

Send Certified cheque, Mastercard, Visa, American Express ...include expiry date, card number and signature.
We process C.O.D.'s for Canpar or Canada Post.
Minimum order $10.00.
Add 5% (minimum $2.00) for shipping and handling.
Ontario residents add 7% Sales Tax.

ARKON ELECTRONICS LTD.
409 Queen St. West, Toronto, Ontario M5V 2A5
(416-868-1315)

Three good reasons to buy a handheld DMM from Fluke.

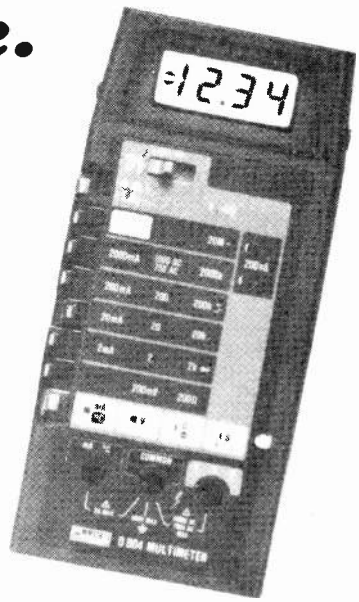

MODE D804: THE INVESTIGATOR

- Nine functions
  - dc voltage
  - ac voltoge
  - dc current
  - ac current
  - resistance
  - diode test
  - conductance (1/R)
  - logic level and continuity detect
  - temperature (K-type thermocouple)
- Peak hold on voltage and current functions
- Selectable audible indicator for continuity or level detection
- 3 1/2-digit resolution
- 0.1% basic accuracy
- LCD display
- Overload protection
- Safety designed test leads
- Full year parts & labor warranty

FLU-D804 ***$339.95***

MODEL D802: THE ANALYST

- Seven functions
  - dc voltage
  - ac voltage
  - dc current
  - ac current
  - resistance
  - diode test
  - conductance (1/R)
- 3 1/2-digit resolution
- 0.1% basic dc accuracy
- Overload protection
- Safety-designed test leads
- Full year parts & labor warranty

FLU-D802 ***$258.95***

MODEL D800: THE TROUBLESHOOTER

- Six functions
  - dc voltage
  - ac voltage
  - dc current
  - ac current
  - resistance
  - diode test
- 3 1/2-digit resolution
- 0.5% basic dc accuracy
- LCD display
- Overload protection
- Safety-designed test leads
- Full year parts & labor warranty

FLU-D800 ***$172.95***

FLUKE®

LOW COST DMM'S FOR BENCH OR FIELD

The D810 and D811 are general purpose, bench/portable digital multimeters that are identical except for power sources. The D810 operates on line voltage, while the D811 is also equipped with rechargeable batteries that provide 15 to 40 hours of operation depending on functions used.

Because these DMM's measure the true rms value of ac signals, even complex inputs such as square waves and peaked waveforms can be measured with accuracy and confidence to 50 kHz (±3 dB to 200 kHz typical).

The wideband, low-noise measurement accuracy in these two benchtop multimeters is made possible by a Fluke-manufactured hybrid rms converter.

- 3 1/2 LCD display
- Auto zero, auto polarity
- AC or battery operated models
- One year warranty
- Many other features not found in other DMM'S!

FLU-D810 ***$365.95***
FLU-D811 ***$418.95***
(with Ni Cad batteries)

FLUKE DMM ACCESSORIES

FLU-Y8205 Carrying case (FLU-D810, D811)	51.95
FLU-C90 Carrying case (FLU-D800, D802, D804)	15.95
FLU-A81 AC adaptor (FLU-D800, D802, D804)	29.95
FLU-80J10 10 Amp current shunt	44.95
FLU-Y8133 Deluxe test lead set	27.95
FLU-Y8134 Deluxe test lead set with safety connectors.	27.95
FLU-Y8140 Slim test lead set	27.95
FLU-80T150C Temp. probe (°C)	176.95
FLU-80T150F Temp. probe (°F)	176.95
FLU-Y8102 Sheath thermocouple (D804)	74.95
FLU-Y8103 Bead thermocouple (D804)	34.95
FLU-Y8104 Thermocouple termination (D804)	14.95
FLU-Y8008 Touch and hold probe (D810, D811)	65.95
FLU-80K40 40KV high voltage probe	115.95
FLU-81RF 100 MHz rf probe	65.95
FLU-801600 Clamp-on AC current probe 600A	136.95
FLU-Y8100 200A AC/DC current probe	262.95
FLU-Y8101 150A AC current xformer	108.95

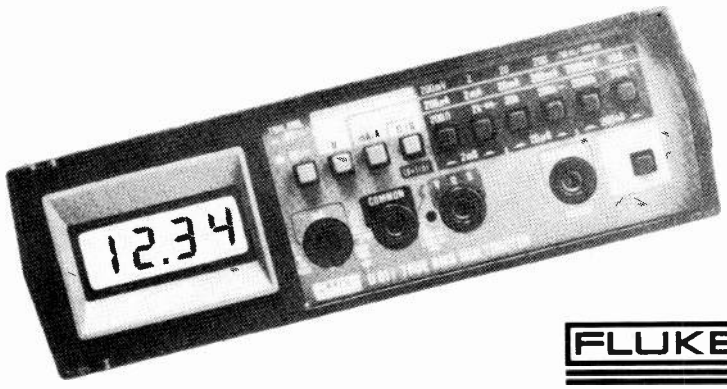

FLUKE®

Send $2.50 for Arkon Electronics 100 Page Catalogue or pick it up in our store when you're in our area. We have the largest computer and electronic hobbiest store in Canada. Add 35¢ postage.

Exceltronix
Components & Computing Inc.

COME AND SEE US AT THE CNE!
— We are exhibiting the newest products from Multiflex Technology in the Better Living Centre at the Canadian National Exhibition in Toronto, August 24 to September 7, 1981. See you there!

319 COLLEGE STREET, TORONTO, ONTARIO, CANADA, M5T 1S2 (416) 921-5295

SD SYSTEMS

VERSAFLOPPY II Disk Controller
— Controls 4 independent drives
— 8" single sided/double density, 8" double sided/single density and 5¼" single sided/single density may be used in any combination.
— Control firmware PROM available.

$498

VDB 8024 Video Board
— 80 characters by 24 lines
— 7 by 10 matrix
— Upper/lower case, special and user-programmable characters
— Full cursor control
— On-board Z80-CPU and 2K RAM
— Keyboard power and interface
— Many special features

$539

MPC4 4-Channel Serial I/O Board
— Four serial I/O ports
— Two Z80-DARTs and a Z80 CPU
— Real-time clock
— Programmable baud rates for all ports
— 1K RAM on board
— 2K control EPROM
— FIFO buffers on all ports
— Expandable RAM

$685

MPB100 CPU Board
— S-100 compatible Z80 microprocessor board
— 2 or 4 MHz operation
— Automatic power-on jump to start of any 4K block in memory
— Socket for 2K EPROM
— Optional wait states
— Can be used with many S-100 computers

$348

Z80 Starter Kit
— Complete microcomputer on a board
— Hex keyboard and display
— PROM programmer
— Kansas City standard cassette interface
— Provision for two S-100 card slots
— Wire-wrap area
— Monitor ROM provides memory/port examine and change, CPU register examine and change, breakpoints
— Z80-CTC and Z80-PIO allow parallel I/O and vectored interrupts
— 1K on-board RAM expandable to 2K

$485

PROM 100 EPROM Programmer
— Programs 2708, 2716, 2732 and 2516 EPROMs
— 25V programming pulse generated on-board
— Automatic verification of programming and erasure
— Zero insertion force socket
— Control software in Z80 code

$279

SBC200 Single-Board Computer
— Z80A CPU runs at 4 MHz
— 8K EPROM and 1K RAM
— Serial and parallel I/O ports
— 4-channel counter-timer using Z80-CTC
— Programmable baud rate generator for serial port
— No "front panel" required

$445

EXPANDOPROM EPROM Board
— 16 sockets, DIP switch selectable, for 2708 or 2716 EPROMs (1 to 32K)
— Compatible with S.D. Systems, Imsai, Altair, SOL-20 or Cromemco Z80 CPU cards
— Also compatible with 8080A and 8085 based systems

$197

EXPANDORAM II Memory Board
— Uses 4116 or 4164 RAM chips for up to 256K on one S-100 board
— Bank-select feature allows up to 8 boards on the same bus
— Operates with Z80 CPUs at up to 4 MHz
— Hidden refresh
— Address-locatable

$319

MULTIFLEX

Multiflex Z80A Computer System
— Sales of the multiflex Z80A system have been going so well that we are able to offer the original kit price of $375 once again. We suggest that you get your system quickly, however, as our cost will soon force us to permanently increase the price.

$375 kit $475 assembled

Multiflex Video/Graphics Board
— Colour video graphics and character board based on the Motorola 6847. This S-100 board will work with many computer systems, adding several I/O functions as well as video. But here's the clincher: A complete colour RF modulator is included on-board! Price not yet available; please check with Exceltronix staff.

Multiflex 64K Memory Boards
— S-100 memory boards, based on the 8202 memory controller from Intel. On-board refresh and bank select. Boards may be purchased with as little as 16K of RAM and may be upgraded at any time to 32K, 48K, or 64K configuration.

$599 for assembled and tested 64K board. Please call for other pricing details.

Multiflex Logic State Analyzer
— 16 bits, 1024-word memory
— 5 MHz operation
— Equals or outperforms competitive analyzers costing 5 to 10 times its price.
— Come in for a demonstration

$395 in kit form; **$475** assembled and tested

Mail Orders
SEND A CERTIFIED CHEQUE OR MONEY ORDER (DO NOT SEND CASH). MINIMUM ORDER IS $10 PLUS $3 FOR SHIPPING. ONTARIO RESIDENTS MUST ADD 7% PROVINCIAL SALES TAX. VISA AND MASTERCARD ACCEPTED: SEND CARD NO., SIGNATURE, EXPIRY DATE AND NAME OF BANK.

Price Policy
REMEMBER THAT AT EXCELTRONIX, ALL PRICES ARE NEGOTIABLE FOR QUANTITY PURCHASES. IF YOU CANNOT AFFORD LARGE QUANTITIES ON YOUR OWN, HOW ABOUT STARTING A CO-OP.

Memory Specials

5101 CMOS	$4.49*	4116-200nS	$3.30*
2708 EPROM	$4.50**	4116-300nS	$1.95*
2716 EPROM	$7.25**	2114L-200nS	$4.25*
2732 EPROM	$16.95**	2114L-450nS	$3.49*
		2102LFPC	$1.69*

*10% off 8 or more pieces
**10% off 16 or more pieces

SPECIALS ON T.T.L

74LS00	.19	74LS123	.75	74LS241	1.15
74LS01	.19	74LS125	.57	74LS242	1.10
74LS02	.25	74LS126	.57	74LS243	1.10
74LS03	.25	74LS132	.49	74LS244	1.10
74LS04	.25	74LS133	.95	74LS245	2.05
74LS05	.25	74LS136	.57	74LS248	1.39
74LS08	.19	74LS138	.73	74LS249	1.25
74LS09	.25	74LS139	.62	74LS251	.67
74LS10	.22	74LS145	1.38	74LS253	.69
74LS11	.25	74LS147	2.50	74LS257	.69
74LS12	.25	74LS148	1.59	74LS258	.72
74LS13	.28	74LS151	.55	74LS259	1.65
74LS14	.50	74LS153	.45	74LS260	.95
74LS20	.22	74LS154	2.25	74LS266	.45
74LS21	.22	74LS155	.85	74LS273	1.73
74LS26	.50	74LS156	.91	74LS275	4.95
74LS27	.38	74LS157	.59	74LS279	.59
74LS30	.22	74LS158	.59	74LS280	1.95
74LS32	.29	74LS160	.85	74LS283	.99
74LS37	.35	74LS161	.75	74LS290	.92
74LS38	.35	74LS163	.75	74LS293	.48
74LS42	.54	74LS164	.75	74LS298	1.14
74LS47	.85	74LS165	1.14	74LS299	2.89
74LS48	.89	74LS166	2.10	74LS323	6.25
74LS51	.25	74LS170	2.05	74LS324	2.90
74LS73	.39	74LS173	.75	74LS365	.67
74LS74	.42	74LS174	.49	74LS366	.67
74LS75	.43	74LS175	.49	74LS367	.65
74LS78	.35	74LS181	2.45	74LS368	.65
74LS83	.89	74LS190	.92	74LS373	1.59
74LS85	.95	74LS191	.92	74LS374	1.59
74LS86	.49	74LS192	.82	74LS375	.83
74LS90	.48	74LS193	.82	74LS377	1.59
74LS91	.95	74LS194	.83	74LS378	1.27
74LS92	.59	74LS195	.69	74LS390	1.25
74LS95	.98	74LS196	1.09	74LS393	1.49
74LS96	.98	74LS197	1.09	74LS395	1.49
74LS109	.45	74LS221	1.06		
74LS112	.45	74LS240	1.15		

Hameg Oscilloscopes
— The specials continue on German-made Hameg 'scopes

model	reg.	sale price
HM307	$550.00	$495.00
HM312	$855.00	$769.00
HM412	$1277.00	$1149.00
HM512	$2000.00	$1795.00

ASCII Keyboards
— 106 keys: Typewriter-style keyboard plus numeric and cursor control keypads
— Several control keys, user-definable through two PROMs
— ASCII encoded
— Power LED and remote processor reset switch included

$124.95

IC Sockets: a penny a pin!
— high quality low-profile solder-tail DIP sockets. Available in 14, 16, 20, 24, 28, and 40 pin types.

Shugart Disk Drives

SA400 — Single sided, single or double density 5¼" floppy drive
— Soft or hard sectored **$390**

SA450 — All the features of the SA400 (above) except double sided **$580**

SA801R — Single sided, single or double density 8" floppy drive
— Hard or soft-sectored
— Designed for side-by side mounting of two drives in a standard 19-inch rack **$685**

SA850R —All the features of the SA801R (above) but double sided **$950**

Microprocessors and Support

1802	10.99					8224	4.35
1822	9.95	Z80A-DMA	27.95	6820	3.39	8226	2.49
1824	4.55	Z80A-SIO/0	35.95	6821	3.39	8228	6.39
1852	1.95	Z80A-SIO/1	35.95	6845	33.29	8251	6.40
1853	1.85	Z80A-SIO/2	35.95	6850	3.39	8253	10.95
		Z80A-SIO/9	27.00	6852	3.39	8255	6.39
1771	19.95	Z80A-DART	18.95			8257	10.35
1791	79.95			8080A	5.39	8259	10.35
		6800	5.99	8085	8.35	6502	8.95
Z80A-CPU	9.49	6802	11.55	8212	2.53	6504	9.89
Z80A-PIO	9.89	6809	25.05	8214	4.39	6505	9.95
Z80A-CTC	9.75	6810	3.73	8216	2.49	6520	7.45
						6522	10.25
						6532	14.00
						6551	14.05

ALL PRICES ARE IN CANADIAN FUNDS, 9% FEDERAL SALES TAX INCLUDED

Circle No. 22 on Reader Service Card.

Electronics Today International
Editorial and Advertising Offices
Unit 6, 25 Overlea Boulevard,
Toronto, Ontario, M4H 1B1
Telephone (416) 423-3262

Publisher and Editor
HALVOR W. MOORSHEAD

Assistant Editor
JOHN VAN LIERDE

Editorial Assistant
STEVE RIMMER

Advertising Manager
SENGA HARRISON

Advertising Representative
JIM O'BRIEN

Advertising Services
CAROLYN WYATT

Subscription Department
BEBE LALL
NADIA HIJAZI

Accounts Department
NANCY ALLEN

Production Manager
TERRY FLETCHER

Production
SARAH-JANE NEWMAN
CINDY BAKER

Contributing Editor
WALLACE PARSONS

INTERNATIONAL EDITIONS
Electronics Today International,
145 Charing Cross Road,
London WC2H 0EE, UK

Electronics Today International,
Ryrie House, 15 Boundary Street,
Rushcutters Bay, Sydney, Australia

Elrad
Kommanditgesellschaft, Bissendorfer
Strasse 8, 3000 Hannover 61, Germany

Electronica Top Internationaal
Postbus 93, Bilthoven, Holland

ETI Magazine is Published by:
Electronics Today International (Canada) Limited

Newsstand Distribution: Master Media, Oakville, Ontario

SUBSCRIPTIONS
$16.95 (one year), $29.95 (two years). For US add $3/yr., other countries add $5/yr. Please specify if subscription is new or a renewal.

BACK ISSUES AND PHOTOCOPIES
Previous issues of ETI Canada are available direct from our offices for $3.00 each; please specify by month, not by feature you require. See order card for issues available.
We can supply photocopies of any article published in ETI Canada; the charge is $2.00 per article, regardless of length. Please specify both issue and article.

POSTAL INFORMATION
Second Class Mail Registration No.3955.
Mailing address for subscription orders, undeliverable copies and change of address notice is:
Electronics Today International, Unit 6, 25 Overlea Blvd., Toronto, Ontario, M4H 1B1.

COPYRIGHT
All material is subject to worldwide copyright protection. All PCB patterns are copyright and no company can sell boards to our design without our permission.

LIABILITY
While every effort has been made to ensure that all constructional projects referred to in this magazine will operate as indicated efficiently and properly and that all necessary components are available, no responsibility whatsoever is accepted in respect of the failure for any reason at all of the project to operate efficiently or at all whether due to any fault in the design or otherwise and no responsibility is accepted for the failure to obtain component parts in respect of any such project. Further no responsibility is accepted in respect of any injury or damage caused by any fault in design of any such project as aforesaid.

Electronics Today INTERNATIONAL

AUGUST 1981 Vol. 5. No. 8.

Features

Recording Tape and Tape Recording 18
There's more to tape recording than meets the eye, writhing magnetic fields leaping across tape head gaps desparately trying to impress sound on stubborn magnetic oxide particles. We look at the ins and outs of tape recording and how they make a non-linear medium, linear.

Anatomy Of a Micro 25
Everyone knows that the microprocessor is the heart of any microcomputer. But MPUs have their own innards too and understanding the workings helps a programmer to make them work better. Henry Budgett leads the tour.

Tape . . . Piles Of It. See p 18

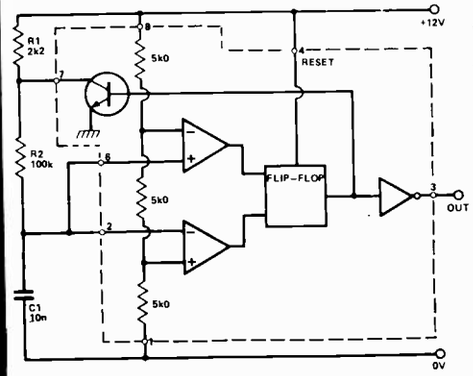

555 Astables On p 39

Wein Bridge Oscillator 35
Although they're somewhat difficult to implement, Wein Bridge oscillators have enjoyed great popularity. If you want pure sine waves, you'll want to turn to page 35.

555 Astable Circuits 39
By now, our readers have seen countless articles on the 555 timer IC. Undaunted, however, Ray Marston has taken breadboard in hand to describe some exotic ways and means of extracting top performance from this versatile chip.

Holograms 31
Making seemingly solid objects out of nothing is a pretty neat trick, but that's what holograms do. Anne Sullivan looks at lasers, interference patterns and other good things.

Into Electronics 55
It's Part II now and Ian Sinclair discusses audio signal processing including records and tape recording.

The ghastly, deformed creature on our cover could be a burglar, possibly invading the home of some innocent victim to plunder ... the family jewels, the good silver ... maybe even the holographic water faucets. Insidious cad! Actually, it's just one of the editorial guys holding a flashlight. Find out how to keep our editors out of your house with the ETI infra-red burglar alarm, on page 11.

ISSN 0703-8984

Projects

Infra Red Alarm 11
More than just yer average electric eye, our Infra Red Alarm is designed to avoid false triggering from high flying moths or low flying Concordes. Infra Red radiation makes it invisible, dual emitters and detectors make it invincible!

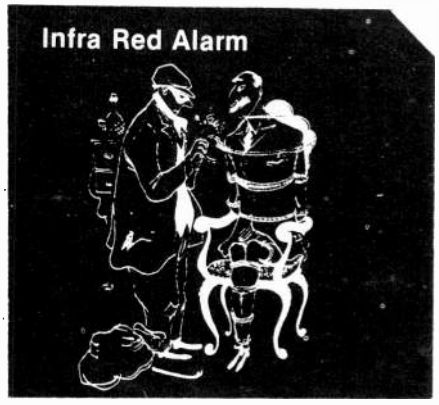

Bench PSU 41
Powering projects with batteries can be pricey at best, and unreliable at its worst. Plug into your local utility with our Bench Power Supply project featuring stepped output from 1V5 to 20 V at 1 amp.

Wired Sound 49
If you thought that only 120 VAC comes out your wall outlets, you're dead wrong. With our Wired Sound unit, you can make your own Muzak, listen to the baby in the East Wing or make a wireless intercom.

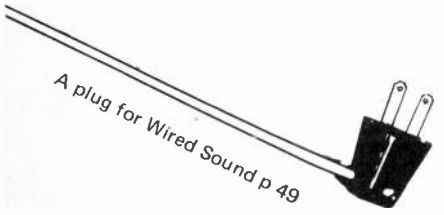

Electric Music On p 46

Cat Door, p66

Columns

Fun Of Electronics 28

What's New 46
Steve Rimmer

Audio Today 60
Wally Parsons

Tech Tips 67
Our Readers

News & Info

News 7
Babani Books 16
Tab Books 24
Next Month 38
ETI Specials 44
Reader Service Card 44
Alas! 53
Subscriptions 54
Classifieds 62
ETI Binders 66

ADVERTISERS' INDEX

Active Component Sales Corp 10,72
Amitron 66
Arkon Electronics 2
Audiovision 37
Avalon Audio 34
BCS Electronics 30,54,68
Bryan Electronics 59,68
Classified 62
Dominion Radio and Electronics 6,7
Duncan Instruments Ltd 8,48
Dynamic Sound and Components 65
Electronic Packaging Systems 8,48
Exceltronix 3
Hammond Manufacturing 48,67,68
Len Finkler Limited 71
McGraw-Hill 29
Newtronics 37,69
Nu West Video Systems Ltd 8
Orion Electronic Supplies 34
R-A-E Industrial Electronics Ltd 66
Selco Electronique 37,69
Sheppard Agencies 37

Editorial Queries
Written queries can only be answered when accompanied by a self-addressed, stamped envelope. These must relate to recent articles and not involve the staff in any research. Mark such letters ETI-Query. We cannot answer telephone queries.

Binders
Binders made especially for ETI are available for $6.75 including postage and handling. Ontario residents please add provincial sales tax.

Sell ETI and ETI Special Publications
ETI is available for resale by component stores. We can offer a good discount when the minimum order of 15 copies is placed. Readers having trouble in obtaining the magazine could ask their local electronics store to stock the magazine.

Component Notation and Units
We normally specify components using an international standard. Many readers will be unfamiliar with this but it's simple, less likely to lead to error and will be widely used everywhere sooner or later. ETI has opted for sooner!
Firstly decimal points are dropped and substituted with the multiplier: thus 4.7uF is written 4u7. Capacitors also use the multiplier nano (one nanofarad is 1000pF). Thus 0.1uF is 100nF, 5600pF is 5n6. Other examples are 5.6pF = 5p6 and 0.5pF = 0p5.
Resistors are treated similarly: 1.8Mohms is 1M8, 56kohms is the same, 4.7kohms is 4k7, 100ohms is 100R and 5.60hms is 5R6.

PCB Suppliers
ETI magazine does NOT supply PCBs or kits but we do issue manufacturing permits for companies to manufacture boards and kits to our designs. Contact the following companies when ordering boards.
Please note we do not keep track of what is available from who so please don't contact us for information on PCBs and kits. Similarly do not ask PCB suppliers for help with projects.

K.S.K. Associates, P.O. Box 54, Morriston, Ont. N0B 2C0.
B&R Electronics, P.O. Box 6326F, Hamilton, Ont., L9C 6L9.
Wentworth Electronics, R.R.No.1, Waterdown,Ont., L0R 2H0.
Danocinths Inc., P.O. Box 261, Westland MI 48185, USA.
Arkon Electronics Ltd., 409 Queen Street W., Toronto, Ont., M5V 2A5.
A-1 Electronics, 5062 Dundas Street W., Islington, Ont., M9A 1B9.
Beyer & Martin Electronic Ltd., 2 Jodi Ave., Unit C, Downsview, Ontario M3N 1H1.
Spectrum Electronics, Box 4166, Stn 'D', Hamilton, Ontario L8V 4L5.

535 Yonge Street,
Toronto, Ont. M4Y 1Y5
Phone (416) 922-1818
No collect calls please

DOMINION

POTENTIOMETERS

A huge selection available. Slider controls from 99¢ to $2.95; Single pots 49¢ (with switch 59¢) Dual pots 69¢ (with switch 79¢). See our catalogue for full range and other types.

ETCHANT

16 oz $2.25
32 oz $4.25
140 oz $14.95

PC BOARD SPECIALS

Epoxy Base PC
6" x 6½" . . . . . 25¢ ea.
13" x 4" . . . . . 35¢ ea.
13" x 6" . . . . . 50¢ ea.

CAPACITORS

NISSEI POLYESTER FILM

uF	Price	uF	Price	uF	Price	uF	Price
0010	20	012	20	0027	20	027	25
0012	20	015	20	0033	20	033	25
0015	20	047	30	0039	20	039	25
0018	20	056	30	0047	20	12	35
0022	20	068	30	0056	20	15	40
0068	20	082	30	018	25	18	45
0082	20	10	30	022	25	22	50
010	20						

CAPACITORS

AXIAL LEAD TANTALUMS

DIPPED SOLID TANTALUM
CAPACITANCE TOLERANCE +/– 20%

uF	WV16 SV20	WV25 SV32	WV50 SV63	uF	WV16 SV20	WV25 SV32	WV35 SV46
.1			25	0.22			
2.2			25	0.33			
3.3			25	0.47			35
4.7			25	0.68			35
10	25	25	30	1.0			35
22	30	30	35	1.5			35
33	30	35	35	2.2			35
47	35	35	35	3.3			35
100	35	40	50	4.7	35		35
220	35	40	55	6.8	35		35
330	40	50	65	10	45	50	55
470	45	55	75	15	50	55	85
1000	60	70	1.00	22	55	65	1.35
2200	75	1.05		33	65	1.20	2.25
3300	1.05	1.35		47	1.95	2.75	
4700	1.65	1.95		68	2.75		
				100	3.50		

TTL

7400 ... .45	7423 ... .55	7472 ... .55	74123 ...1.10
7401 ... .45	7425 ... .65	7473 ... .70	74125 ... .98
7402 ... .45	7426 ... .65	7474 ... .70	74141 ...1.15
7403 ... .40	7427 ... .55	7475 ... .98	74150 ...2.50
7405 ... .75	7430 ... .45	7476 ... .70	74151 ... .98
7406 ... .85	7440 ... .45	7485 ...1.40	74154 ...2.50
7407 ... .95	7441 ...1.35	7486 ...1.50	74160 ...1.75
7408 ... .75	7442 ...1.35	7490 ...1.15	74164 ...1.25
7409 ... .45	7446 ...1.45	7491 ...1.15	74177 ...1.45
7410 ... .39	7447 ...1.65	7492 ... .85	74190 ...1.65
7411 ... .55	7448 ...1.75	7493 ... .85	74191 ...1.60
7412 ... .55	7454 ... .65	74121... .65	74192 ...1.55
7413 ... .85	7460 ... .40	74122... .90	74193 ...2.95
7420 ... .45			

4000 SERIES

4000 ... .50	4015 ... 1.50	4026 ... 2.35	4044 ... 1.05
4001 ... .45	4016 ... .50	4027 ... .85	4045 ... 1.78
4002 ... .45	4017 ... 1.50	4028 ... 1.50	4047 ... 1.09
4006 ... 1.25	4018 ... .75	4029 ... 1.25	4049 ... .45
4007 ... .20	4019 ... 1.65	4030 ... .40	4050 ... 1.50
4008 ... 1.15	4020 ... 1.25	4033 ... 1.95	4069 ... .45
4010 ... .75	4021 ... 1.95	4040 ... 1.29	4510 ... 1.95
4011 ... .65	4024 ... 1.25	4041 ... 2.05	4511 ... 1.95
4013 ... .65	4025 ... .40	4043 ... 1.30	4516 ... 1.35
4014 ... .90			

MICROPROCESSOR

74LS00... .85	74LS32... .80	74LS109... .80	8080 ...8.95
74LS04... .60	74LS33... .60	74LS125...1.00	8212 ...3.00
74LS08... .65	74LS38... .80	74LS132...1.40	8216 ...3.50
74LS10...1.50	74LS74... .70	74LS151...1.60	8224 ...8.95
74LS11... .75	74LS75...1.10	74LS155...1.10	8228 ...6.25
74LS20... .70	74LS86... .70	74LS247...1.18	8255 ...8.95
74LS30... .65	74LS90... .95	Z80 ..14.95	4116 ...7.95

ZENERS

TYPE #	VOLTAGE	WATTAGE			
BZX61-C75	3.3V	1W	IN758A	10	1W
IN4623	4.3	1W	IN759A	12V	1W
IN751A	5.1	1W	IN964B	13	.5
IN4733A	5.1	1W	3E216D5	14	1W
IN4734	5.6	1W	IN966	16	1W
14-515-04	6.2	1W	BZX61-C18	18	1W
114574	6.2	.5	HZ20C	20	1W
IN753A	6.2	1W	BZX61-C20	20	1W
IN754A	6.8	1W	GE5028	20	.1W
IN752A	5.6	1W	14-515-31	22	.5
17-515-35	6.8	1W	IN4751A	30	1W
HZ7B	7	1W	BZX61-C30	30	1W
IN755A	7.5	1W	BZX79-C36	36	½w
IN74738A	7.5	1W	BZX61-C56	56	1W
IN757A	9.1	½W	IN5045	56	5W
IN4739A	9.1	.5	BZX61-C68	68	1W
BZX61-C9V1	9.1	1W	IN4764A	100	1W
IN757A	9.1	1W	IN5593B	183	1W

POWER SUPPLY

1400	16	65	6800 Com 25	6.95
1600	16	65	15000 RPE10	4.50
2200	16	75	12000 Com 40	6.95
2500	10	65	14000 Com 40	7.50
1000 Can	16	1.50	15000 RPE 10	4.50
			15000 Can 16	4.90
4700 Elec	40	1.75	15000 Can 25	5.50
			15000 Com 50	11.95
4700 Com	100	8.95	44000 Com 35	14.95
6800 RPE	25	6.95	80000 Com 20	14.95

RADIAL LEAD

UF	WV16 SV20	WV25 SV32	WV50 SV63
.1			.25
2.2			.25
3.3			.25
4.7		25	.25
10	25	25	.25
22	25	25	.25
33	25	25	.30
47	.25	.30	.35
100	.30	.30	.35
220	.30	.35	.45
330	.35	.40	.60
470	.40	.50	.85
1000	.60	.75	
2200	1.00		

TRANSISTORS

PART No.	REPLACE	
2N2906 ·	ECG-159	1.79
BF-245 ·	ECG-133	1.99
2N3391 ·	ECG-199	1.15
BF-199 ·	ECG-161	1.59
TIS 92 ·	ECG-128	2.40
BD136 ·	ECG-185	2.99
BD135 ·	ECG-184	2.79
2SC1505·	ECG-198	2.95
2SC1520·	ECG-198	3.00
2SC1507·	ECG-198	2.95
2SC1446·	ECG-198	2.95
MJE2370·	ECG-242	3.59
AD161 ·	ECG-155	4.95
2SC1025·	ECG-175	2.95
2SC1304·	ECG-124	2.59
2SC1104·	ECG-124	2.59
2SD24Y ·	ECG-124	2.59
AD162 ·	ECG-131	3.99
AD139 ·	ECG-104	1.89
2SC1160·	ECG-175	3.50
2N3614 ·	ECG-121	3.95
2SC1106·	ECG-162	9.95
BD182 ·	ECG-130	4.79
BU205 ·	ECG-165	9.95
BU108 ·	ECG-165	9.95
2SC940 ·	ECG-283	11.95
2SC939 ·	ECG-163A	12.95
BF245A ·	ECG-133	2.25
2SC945 ·	ECG-199	.89
2SC1685 ·	ECG-199	.89
2SC454 ·	ECG-289	1.59
2SC839 ·	ECG-123A	1.59
2N6558 ·	ECG-191	4.25
2SC458 ·	ECG-289	1.49
2SB77 ·	ECG-102A	1.99
2N1613 ·	ECG-128	1.99
AC-187 ·	ECG-103A	2.30

EduKit's

LOGIC TRAINER $74.95
MODEL DLT01
A new development package for a BASIC DIGITAL LOGIC COURSE. Four gates and a counter. Circuit is included along with an in-depth manual. Protoboard included.

STEREO PHONO PREAMP KIT $11.25
MODEL EK80SP001
Anyone with a ceramic input receiver can enjoy the quality of a magnetic cartridge with this simple but very effective Stereo Phono Preamp. Specification: Standard RIAA, Frequency Response: 20Hz to 2KHz ± 1.5dB. Input Sensitivity: 5mv input for 500mv output. Maximum Output: 700mv rms. Input Overload: 100mv rms. S/N Ratio: Greater than 60dB.

16 CHANNEL MULTI-MODE LED CHASER KIT $32.95
MODEL EK80LCM16
We're proud to add this to our line. It's similar to our 15 channel LED chaser but with many extra features. There are over 60 selectable modes. A few: Up, Down, Skip, Pulse, Scramble, Single Pulse, Multi Pulse and many more. An optional 120 vac board is available. (Extra)

STROBE LITE KIT $21.95
MODEL EK80SL001
Fantastic for special effects. Variable speed Xenon flash gives you a "STILL MOTION" effect. A real attention getter.

CRYSTAL RADIO KIT $8.95
MODEL EK80CR001
A self powered radio which uses a resonant circuit and detector for AM radio reception. An ideal project for the beginners.

1.5 to 24v POWER SUPPLY KIT $24.95
MODEL EK80PS024
A variable Power Supply suitable for many digital and linear applications. Delivers an output current of 100ma from 1.5v to 15v and 500ma from 16v to 24v.

0.28 VOLT POWER SUPPLY KIT $39.95
MODEL EK80PS028
A true 0 to 28 volts capable of delivering 1 amp continuous. Full wave rectification, filtering and capacitance multiplication provides a clean dc source for sensitive audio and digital work. An ideal supply for the experimenter.

STEREO AUDIO MIXER KIT $49.95
MODEL EK80AM001
Inputs 2 phono, 1 aux. Master control. Expandable. Frequency response 20Hz-20kHz; 5v output, 0.01% distortion.

16 CHANNEL LED CHASER KIT $22.95
MODEL EK80LC016
A very familiar sight seen at discos, department stores, and on neon signs. 16 LED's flash in sequence up-down or alternate. Adaptable to 120 vac. (Extra)

POWER SUPPORT 120 . . . . . $24.95
MODEL EK80PLC120
A 120 volt power board which allows you to connect regular lamps to our LED Chaser Kits. 8 channels are supplied per board with 150 watts per channel. They can be easily interfaced for 16 channels.

5 WATT IC AUDIO AMPLIFIER KIT $19.95
MODEL EK80A00S
A general purpose 5 watt amplifier with Thermal Overload and Short Circuit Protection.

DOMINION RADIO: The Home of Radio and Electronics Supply

Circle No. 12 on Reader Service Card.

RADIO

TRANSFORMERS

8801S $8.95
Primary 110V. Secondaries 700V @ 150mA, 250V @ 50mA, 13.5V @ 1.5A (Specifically designed for the 7984 transmitting compactron tube.)

2826500 ..... $3.95
Primary 110V. Secondaries 28V @ 2A, 6V @ 500mA

24-10182-1 ..... $14.95
Primary 110V. Secondaries 56 V (CT) @ 8A, 2V @ 2A, 6.3V @ 4A

24-10182-2 ..... $14.95
Primary 110V. Secondaries 58V (CT) @ 10A, 24V @ 2A, 6.3 @ 4A

321TK $3.95
Primary 1 120V: Secondaries 10V (CT) 500mA, 14V @ 500mA
Primary 2 120V: Secondaries 20V (CT) 500mA, 28V @ 500mA

PHILIPS

PHILIPS Electron Devices Division

DeForest *Quality Loudspeakers*

Combi Plates (Squawker & Tweeter on Aluminum Plate)

AD21160ST8	Diamond Cut	85.00
AD21161ST8	Flat Back	85.00

Full Range

AD5061M8	10 W 5"	20.75
AD7062M8	30 W 7"	26.25
9710MC	20 W 8"	48.00
AD12100M8	25 W 12"	80.00

Passive Radiators ("Drone Cones")

AD8000	Rubber Surround	14.25
AD8001	Rubber Surround	12.00
AD8002	Foam Surround	14.25
AD1000	Rubber Surround	34.50
AD10000/W	Foam Surround	15.00
AD12000	Foam Surround	18.75
AD1201	Rubber Surround	35.90

Cross-Overs

ADF1500/8-4	2 way	9.75
ADF1600/8-4	2 way	9.15
ADF2000/8	2 way	9.15
ADF2400/8	2 way	7.50
ADF3000/8-4	2 way	8.85
AD3WXSP	3 way hi Power	37.50
ADF6/5SP	3 way hi Power	32.00
ADF7/3SP	3 way hi Power	41.10
ADF500-4500/8	3 way	17.40
ADF700 2600/8-4	3 way	22.50
ADF700 3000/8-4	3 way	22.50
AD1SUBW	Sub Woofer	37.50

Tweeters — Dome

AD00400T8/4	18MM	15.40
AD00600T8/4	18MM	14.25
AD00900T8/4	18MM	15.00
AD1407T8/4	Polycarbonate	15.40
AD1411T8/4	Textile	15.40
AD01600T8/4-15	Exposed Textile	19.25
AD01605T8/4/15	Square Exposed	19.40
AD01621T8 4/15 •	Polycarbonate	17.40
AD01[illegible]T8 4/15 •	Textile	17.30
AD01630T8/4/15	Textile	18.00
AD01631T8	Textile Square	21.20
AD01632T8	Paper	18.00
AD0163[illegible]T8 4-15	Paper Square	21.00
AD0163[illegible]T8 15	Diamond Cut Pit	48.00

Tweeters — Dome — Ferro Fluid

AD01404T8 4		17.30
AD01624T8 4		18.00
AD01634T8/4		18.00

Tweeters — Cone

AD2273T8	2" Cone	5.45
AD2296T8	2" Cone	8.40

Squawkers (Mid Range) Dome

AD0211SQ8/4"	5" Textile	39.90
AD02110SQ8/4		37.75
AD02150SQ8/4		44.25
AD02160SQ8/4		46.50
AD02161SQ8/4	Deluxe Version	52.15

Squawkers (Mid Range) Cone

AD5060SQ8/4"	5" Cone	26.00
AD5061SQ8/4	5" Cone	20.00
AD5062SQ8/4	5" Cone	28.65

Woofers

AD4060W8 4	4"	30W	22.25
AD5060W8 4	5"	10W	20.55
AD7650W8	7"		31.20
AD7652W8 4	7"		28.50
AD08120W8	8"		8.62
AD80100W8 W8W	8"	40W	43.00
AD8060W8	8"	30W	25.95
AD8065W8/4	8"	50W	32.40
AD8065ZW8/4	8"	50W	30.00
AD8067W8/4	8"	50W	37.50
AD8067ZW8/4	8"	50W	36.00
AD10650W8	10"	30 W 10	56.25
AD10100W8/4"	10"	40 W 10	75.00
AD10240W8/W8W	10"	70 W 10	67.50
AD10650W8	10"	30 W 10	54.00
AD12200W8	12"	80 W 12	76.00
AD12240W8/W8W	12"	70 W 12	69.00
AD12250W8	12"	100W 12	85.50
AD12600W8	12"	40 W 12	46.80
AD12650W8	12"	60 W 12	52.00
AD15240W8/W8W	15"	80 W 15	69.75

RESISTORS

Values from 1 ohm to 10 meg. ¼ or ½ watt. Still Only 3½¢ each.

MINIMUM ORDER $10.00. All merchandise subject to prior sale. Prices subject to change without notice.

SHIPPING. Add 5% extra to cover shipping, excess refunded. Orders over $75 shipped pre-paid. Ontario residents add 7% P.S.T.

535 Yonge St., Toronto, Ont. M4Y 1Y5

NEWS

Computer Phone

Rauland-Borg (Canada) Inc. has announced the Rauland Telecenter III, a new microcomputer-controlled internal communications system.

The RT 2002 Administrative Telephone System is all solid-state, has instant direct dialing by pushbutton handsets and requires no central operator. A total of 110 lines (10 administrative and 100 staff stations) are available in the basic system and this number may be increased to 200 with a TAC 100 Expander.

The system features a digital readout at each station and can store and display up to 100 'call-ins'. Further enhancements of the RT 2002 are personnel tracking, conference call capability, zone paging and a system-wide alarm capability.

The Rauland Telecenter III RT 2002 administrative telephone system is available across Canada from authorized Rauland-Bord (Canada) dealers.

For more information, contact Rauland-Borg (Canada) Inc., 1361 Huntingwood Drive, Scarborough, Ont. M1S 3J1

New Diecast Boxes

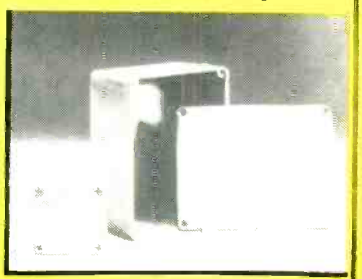

Hammond Manufacturing announces a new line of improved diecast aluminum alloy boxes. Good R. F. shielding makes smaller sizes excellent for R. F. connectors. The countersunk lid has an interlocking flange and the box is drilled and tapped for screws provided.

The boxes have an attractive ground and tumbled finish which may by painted if required. Quantity discounts are provided when the ground and tumbled surface is not required.

These boxes are available at all Hammond distributors.

Looking Back Double Dice, June 81

Inputs of IC2c and IC4c should be pins 11, 12 and 13 instead of 13, 14 and 15 respectively. The outputs of both these gates is pin 10, rather than pin 12.

The PCB is correct.

Thanks to Ted McLeod of London, Ontario, loyal reader and frothing dice friend, for this one.

Sinclair's Latest, June 1981

The article was a bit vague on availability of the ZX81 in Canada. It isn't. The ZX81 will probably makes its debut here sometime this fall. When it finally does arrive, rest assured we'll tell you about it. Watch this space!

High Performance Preamplifier December 1979, Projects Book No.2

It took a while for this overlay error to come to our attention, but the R133 just below SW3 (HI CUT) is in fact R113.

TV "On A Chip"

A 12,000 square mil silicon chip that contains all of the signal conditioning circuitry for a complete black & white television receiver has been introduced by Motorola. This single-chip TV, trademarked Monomax, houses all but the power stages and the sound IF stage of the receiver and replaces four separate chips commonly used to perform the same functions in today's state-of-the are receivers.

The circuit is designed to exceed the most demanding standards of today's TV design and incorporates five Motorola patented circuit improvements that provide significant benefits towards better TV performance.

The new circuit is now being made available through all Motorola distributors.

DUNCAN INSTRUMENTS LTD.

DUAL TRACE OSCILLOSCOPES

MODEL MS-6021
- □ Bandwidth DC-20 MHz
- □ Triggered Time Base 0.5 uSec to 0.5 Sec per division
- □ Variable Delay Time
- □ Rise Time 17.5 nSec
- □ 5 mV to 10 V per division
- □ x5 magnifier
- □ Internal graticule
- □ Operating voltage 115/230 VAC, 60 Hz

OTHER MODELS:
MS-6020 (as MS-6021 but without delay time) $820
MS-6040 (DC-40 MHz) $1800
MS-6045 (DC-45 MHz) $1930

All prices FST Included
In Ontario, add 7% PST
FOB Weston, Ont.

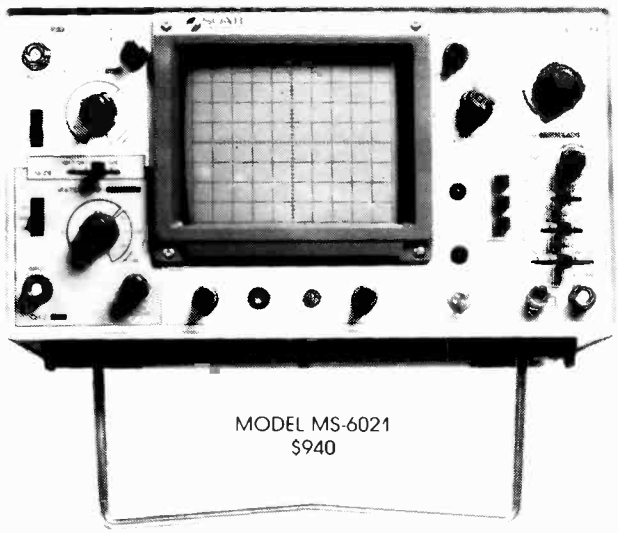

MODEL MS-6021
$940

COMPLETE "IN-HOUSE" SERVICE
SALES — CALIBRATION — REPAIR

DUNCAN INSTRUMENTS LTD.
ELECTRICAL MEASURING INSTRUMENT SPECIALISTS
122 MILLWICK DRIVE, WESTON, ONTARIO • M9L 1Y6
TELEPHONE (416) 742-4448 • TELEX 065-27271

Circle No, 21 on Reader Service Card.

VERO

PRODUCTS AVAILABLE FROM:

Dealers for VERO:

Waterloo Electronic Supply
219 Hartwood Avenue
Waterloo, Ontario

Psionic
925 Crawford Avenue
Windsor, Ontario

Noramel
2407 St Catherine E.
Montreal, Quebec

Kingston Electronic Supply
147 Joseph Street
Kingston , Ontario

General Electronics Limited
5511 Yonge Street
Willowdale, Ontario

Exceltronix
319 College Street
Toronto,Ontario

R-A-E Industrial Electronics Ltd.
11680-170th. Street
Edmonton, Alberta

Cite Electronique
Jean Marc Emond Inc.
383 Canardiere
Quebec,P.Q.

Kris Electronics Limited
1070 Morrison Drive
Unit 1B
Ottawa, Ontario

Cite Electronique Inc.
3185 Rue Hochelaga
Montreal, Quebec

Interior Electronics Limited
3102-29th. Avenue
Vernon, British Columbia

Interior Electronics Limited
1743 Springfield Road
Kelowna, British Columbia

Interior Electronics Limited
1304 Battle Street
Kamloops, British Columbia

Cite Electronique Inc.
918 Rue King Ouest
Sherbrooke, Quebec

Atwater Electronics Ltd.
886 Dundas Street E.
Mississauga, Ontario

VERO Products distributed in Canada by:

EPS Electronic Packaging Systems Ltd.
P.O. Box 481, Kingston, Ont.
K7L 4W5 (613) 384-1142

See our ad elsewhere in this issue.

SATELLITE TV

SOME FRANCHISES STILL AVAILABLE!!

High Gain Feed $210.

24 Channel Receiver complete with Remote. $1950.

120° LNA with specification sheet $995.

Andrews 10 Ft. high gain antenna complete with feed and mount. $2495.

(604) 324-3343 Nu. West Video Systems Ltd.
6590 VICTORIA DRIVE, VANCOUVER B.C. V5P 3X9

Circle No. 15 on Reader Service Card.

Powermos

A significant advancement in N-channel enhancement mode power MOSFETs is announced by Philips Electronics Ltd. Known as the Powermos, it can be driven directly by microcomputer or TTL/LSI outputs - typically 5V with negligible drive power. Switching speeds are 10 to 100 times faster than for conventional bipolar devices. Present types can control currents as high as 14 amperes. Because of a positive temperature co-efficient of 'on' resistance, the Powermos is not subject to secondary breakdown, is thermally stable and can easily be connected in parallel. It is particularly suitable for inductive load switching. Typical applications are switched mode power supplies, motor control, household appliances, consumer and automotive electronics, measuring equipment and data processing peripherals. For more information contact Herb Parkes at Philips Electronics Ltd., 601 Milner Avenue, Scarborough, Ontario, M1B 1M8.

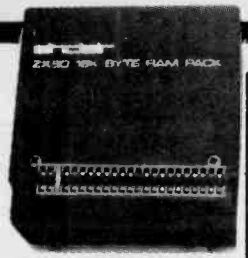

ZX-80

Gladstone Electronics announces the availability from stock of two new add-on units to extend the versatility of the ZX80.

A 16K memory expansion unit, termed a RAM-pack, simply plugs into the back of the ZX80 and extends the memory storage capacity 16-fold. Suggested price is $169.95, claimed to be half that of comparable memory expansion units.

Also available is an 8K BASIC ROM which is a user plug-in replacement for the original equipment 4K chip. This adds to the ZX80 functions with full floating point arithmetic, log and trig functions, programme storage and recall by filename and control functions for the ZX80 Printer. At a suggested price of $59.95, the 8K ROM comes with 200 page manual.

The ZX80 Personal Computer now has a new lower price: $299.95.

Mice

Mice are these small brown fuzzy things that live in one's copy department and eat things without telling anyone. At least, that's what they do here. In the last few issues a band of unusually voracious mice have consumed no less than four printed circuit board layouts and a reader service card number. Munched 'em right off the page, leaving not so much as a scrap of paper or a tip. Now and then you can here them running through the walls, belching contentedly.

Anyway, if you look on page eight of our July issue, an ad for Allan Crawford Associates, you will notice that the bottom of the page contains the handy work of several mice; no number for the bingo card. If you are interested in receiving some information on Allan Crawford's new next day shipment of their extensive line of test gear, please circle No. 30 on this month's card.

As for the PCB's, they are presented here in totality, completeness, and without teeth marks.

If any readers have a good design for a solid state mouse trap, we'd be interested in seeing it.

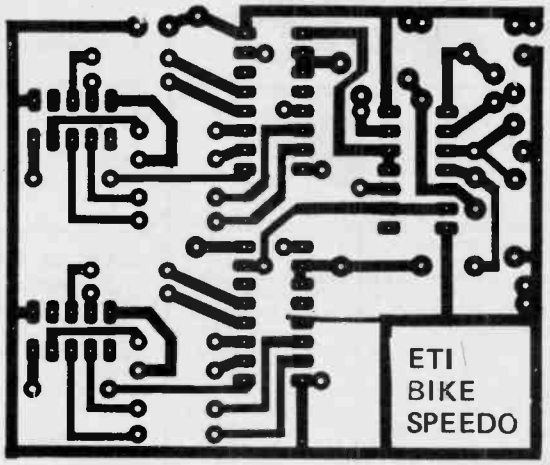

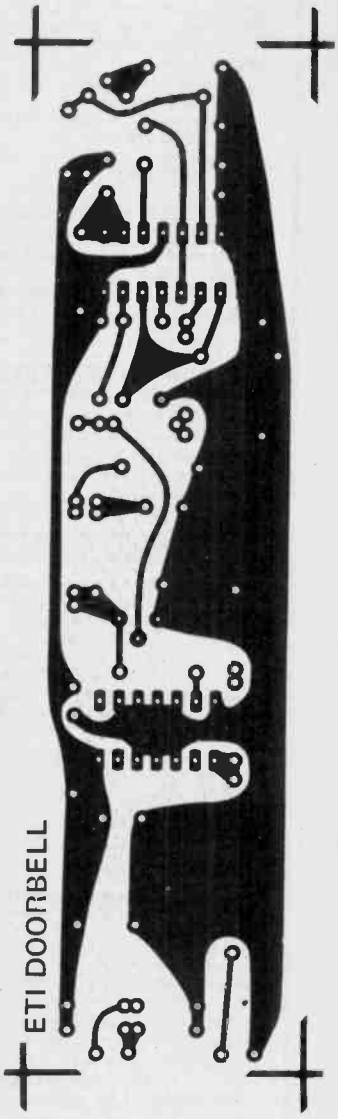

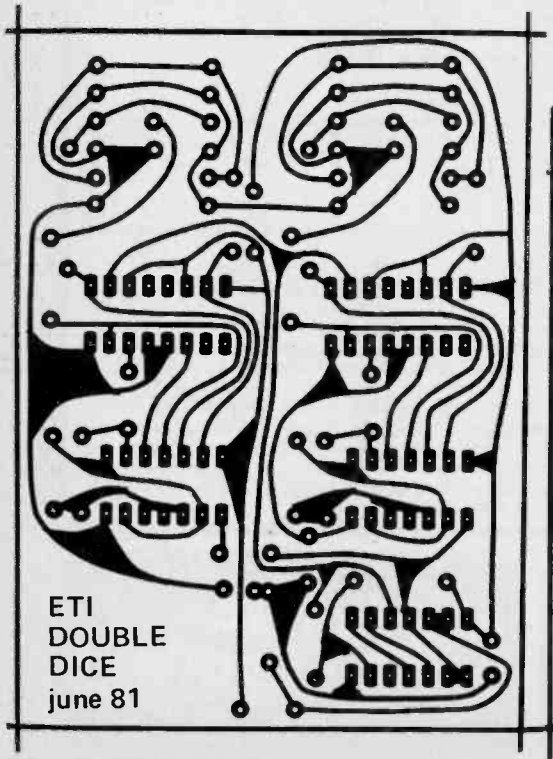

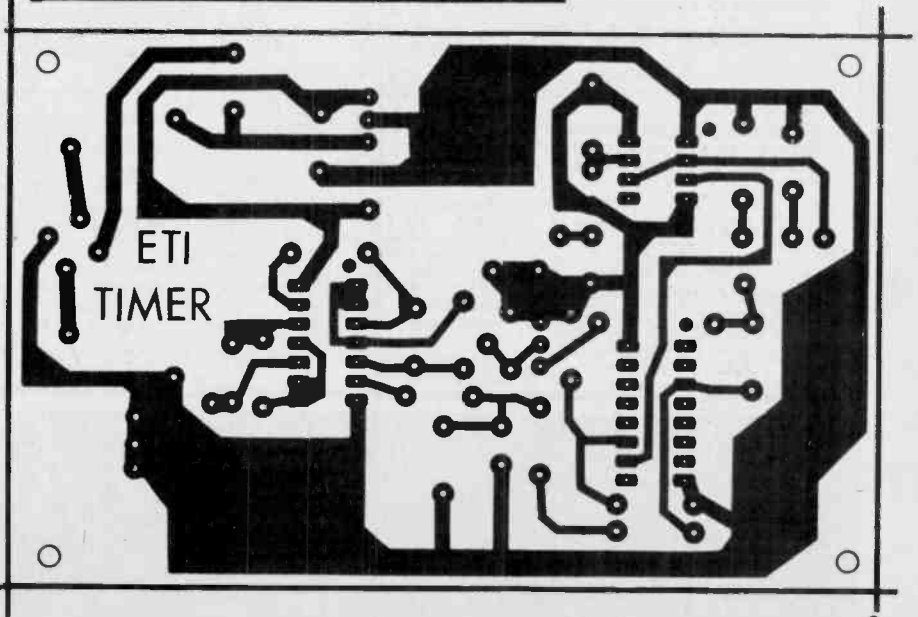

Active Component Sales Corp.

FOLLOW THE SAVINGS DIRECT TO BACK COVER

ROCKWELL INTERNATIONAL AIM65

As a learning aid AIM65 gives you an assembled, tested and warranted R6502 based microcomputer system with a full sized keyboard, an alphanumeric 20 character display and uniquely, an alphanumeric 20 column thermal printer. An on board Advanced Interface Monitor program provides extensive control and program development functions. 1K RAM.

Low price of $552.50

- Attractive yet durable plastice case for the AIM65 SAE1-1 Reg. $95.00 **$79.95**
- Power supply — BRUT-35MI 5V/24V Reg. $95.00 **$74.95**

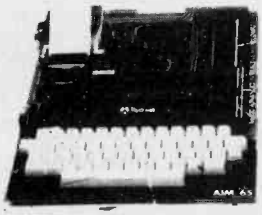

AIM 65

ROCKWELL MICROFLEX 65

EXPANSION BOARDS — Microflex 65 products may be used with Rockwell's AIM 65 Advanced Interactive Microcomputer for product development and desktop microcomputer applications.

Contact the addresses below for further information.

THE NEW 1981 IC MASTER

One book — Two volumes five updates

- Bigger and better • 150 manufacturers
- Two volumes cover the latest information on 50,000 IC's
- Master selection guides including digital, interface, linear, memory, microprocessor, microcomputer board, custom IC's and microprocessor development systems
- Comprehensive alternate source directory listing 40,000 direct replacement parts
- Includes a discontinued parts index

"IF YOU WORK WITH ELECTRONICS, YOU CAN'T DO WITHOUT IT!"

"BONUS OFFER" with every purchase of the 1981 IC Master receive the following data books, Hitachi IC Memories, NEC 1980 Catalog, and Condensed Catalog Teledyne JFET Manual.

Total book package value	**$150.99**
Our super special offer	**99.99**
You save	**51.00**

VECTORBORD®

VECTORBORD stands for quality. Government and industry standards are based on this material which is now available through distributors to hobbyists, engineers and experimenters.

"P" PATTERN. Boards with "P" in part number are ideal for building circuits using intermixed DIPs and discrete components. The .1" spaced holes accommodate solderable terminals, and wrap post terminals. DIPs and many other components may also be mounted directly to the board without terminals.

64P44ELDP epoxy glass composite, 4.5" x 6.5" x 1/16"	$ 3.95 ea
64P44-062XXXPDP Phenolic, 4 x 5" x 6.5" x 1/16"	2.95 ea
79P44ELBDP epoxy glass composite, 4.5" x 8" x 1/16"	4.95 ea
169P44ELDP epoxy glass composite, 4.5" x 17" x 1/16"	8.95 ea
169P84-062DP epoxy glass composite 8.5" x 17" x 1/16"	14.95 ea

ETCHED CIRCUIT MATERIALS + positive photo resist boards:

CU65/45-1RDP	6.5" x 4.5" phenolic, 1 oz. copper, 1 side.	7.95 ea
CU70/45WE-1RDP	7" x 4.5" epoxy glass, 2 oz. copper, 1 side.	11.95 ea

DEVELOPER — Positive acting; developer must be used with +positive acting resist coated boards. 1¼ ounce (enough for at least 200 square inches). Part number 0088-21-15DP. **$2.95 ea**

R407DP RUB-ON RESIST ARTWORK — Includes DIP and other IC patterns, lines, pads, edge connector contact pad sets. Rub onto mylar film master for use with photo resist boards. Rub directly to copper for direct transfer type board. Includes four sheets 5" x 5.5". **$5.95 ea.**

+POSITIVE 32X-1DP PRINTED CIRCUIT KIT

No other materials needed, except UV light source.

Easy to prepare artwork with direct positive materials — no negative. **$29.95 ea.**

Kit contains: two copper clad (one side) boards; one +positive photo-resist coated, one uncoated direct transfer type; four sheets of up-to-date circuit symbols, lines pads, IC pad sheets and reference markings, plus burnishing tool; mylar film for master circuit pattern; opaque mask cutting film; glass pressure plate; developer and etchant with tray for use; etch brush, razor knife; layout paper, instructions.

SYNERTEK® SYM-1

- Full Documentation — Two Manuals
- SY6502 NMOS 8-Bit Microprocessor
- Five On-Board Programmable Interval Timers
- 28 Key Keypad
- Six Digit Display
- 4K Byte ROM SUPERMON Resident Monitor, User Expandable
- 1K Bytes of Static RAM provided, expandable to 4K Bytes On-Board with Sockets Provided
- User PROM/ROM for up to 28K Bytes of User Program
- Applications In — Training — Engineering — Prototyping — Instrumentation — Testing — Experimentation
- Expansion Port for Add-On Modules
- Requires Single +5V Supply
- 32 Character Single-Line Oscilloscope Display
- Same Hardware Interface Busses as KIM-1 (MOS Technology)
- Dimensions 8.25 in. x 10.72 in.
- Power Supply for the SYM-1 5/10 volt power

Low price of $318.50

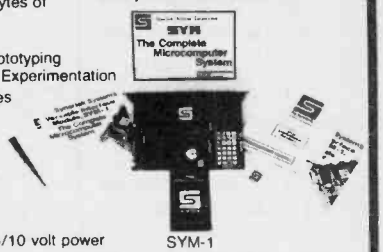

SYM-1

Vector 22/44 Pin Plug Boards for the experimenter. Expand your system's capabilities yourself! Compatible with the AIM-65 and SYM-1. 3682-2DP **$ 19.95**

OHIO SCIENTIFIC SUPERBOARD II

The ideal starter computer with full expandability. A complete system on a board including a full keyboard, a video monitor interface, RS232 and cassette interface, DAC, 8K BASIC-in-ROM, and 4K of static RAM. Requires regulated 5V at 3 amps and a video monitor or TV with an RF modulator.

Accessories — 610 board with 8K RAM expandable to 24K disc interface
— Floppy disc 5", 90K storage
— 630 board with color and I/O capabilities
— Assembler/editor in machine code in cassette with manual
— Extended monitor in machine code on cassette with manual
— Special graphics characters
— Fully assembled and tested

Active Package — Superboard II with Extra 4K memory **$449.95**

Accessories available:

610-8K — 8K expansion RAM

630 Board — Expander board general purpose I/O board with RGB color

CD-3P — Single 5" mini-floppy mounted in case

Contact addresses below for further information.

SUPERBOARD II

STATE OF THE ART BOOKS FROM TEXAS INSTRUMENTS

TTL data book/LCC4112	$12.19	MOS memory data book/ LCC4782	4.48
Transistor and diode data book/ LCC4131	21.85	OPTO electronics data book/ LCC4231	5.83
Power data book/LCC4041	14.99	TMS 9900 series data book/ LCC4400	16.15
Voltage regulator handbook/ LCC4350	4.25		
Integrated circuits data book/ LCC4330	11.28		

Texas Instrument Understanding Series. Understanding Solid State Electronics. Understanding Digital Electronics. Understanding Calculator Math. Understanding Mircroprocessors. Understanding Communication Systems.

Total package value	**$35.40**
Active Special	**29.95**
You save	**5.45**

SUPER SUMMER SPECIALS

HEWLETT PACKARD 7 SEGMENT BUBBLE DISPLAY

Part No. 5082-7433

2.79 mm (.11 inch.), seven segment GaAsP numeric indicators.

Applications include hand-held calculators, portable instruments, digital thermometers, or any other product requiring low power, low cost, minimum space, and long lifetime indicators. **$6.44 ea.**

Super L.E.D. sale. T 1¾ RED. 100 pcs **$7.95** 200 pcs. **$14.95** 500 pcs $34.50

TRIMMER POTENTIOMETER'S (Thumbwheel Adjustment). Available values in OHMS; 100, 250, 500, 1K, 2.5K, 5K, 10K, 250K and IMEG.

10-90 pcs. **.12 ea,** 100-499 pcs, **.10 ea.**

¼ watt and ½ watt resistors available. 5% bulk pricing. ¼ W **$8.90** per thousand. ½ W **$9.95** per thousand. Minimum 1000 per value.

MINIMUM MAIL ORDER $10.00
Add $3.00 to cover postage and handling

PRICES ARE IN CDN FUNDS F.O.B. CANADA
Federal Sales Tax Incl
Provincial Sales Tax Extra

LARGE INVENTORY AT ALL LOCATIONS

STORE HOURS:
Monday to Thursday 9.00 am — 6:00 pm
Friday 9:00 am — 9:00 pm
Saturday 9:00 am — 5:30 pm

VISA AND MASTER CHARGE ACCEPTED

5651 FERRIER ST.
MONTREAL, QUEBEC
H4P 2K5
Tel: (514) 731-7441

BAXTER CENTER
1050 BAXTER ROAD
OTTAWA, ONTARIO
K2C 3P2
Tel (613) 820-9471

4800 DUFFERIN ST
DOWNSVIEW, ONTARIO
M3H 5S9
Tel (416) 661-1115

5809 MacLEOD TRAIL S.
UNIT 109
CALGARY, ALBERTA
T2H 0J9
Tel (403) 259-6437

3070 KINGSWAY
VANCOUVER, B.C.
V5R 5J7
Tel: (604) 438-3321

Active Component Sales Corp.

INFRA-RED ALARM

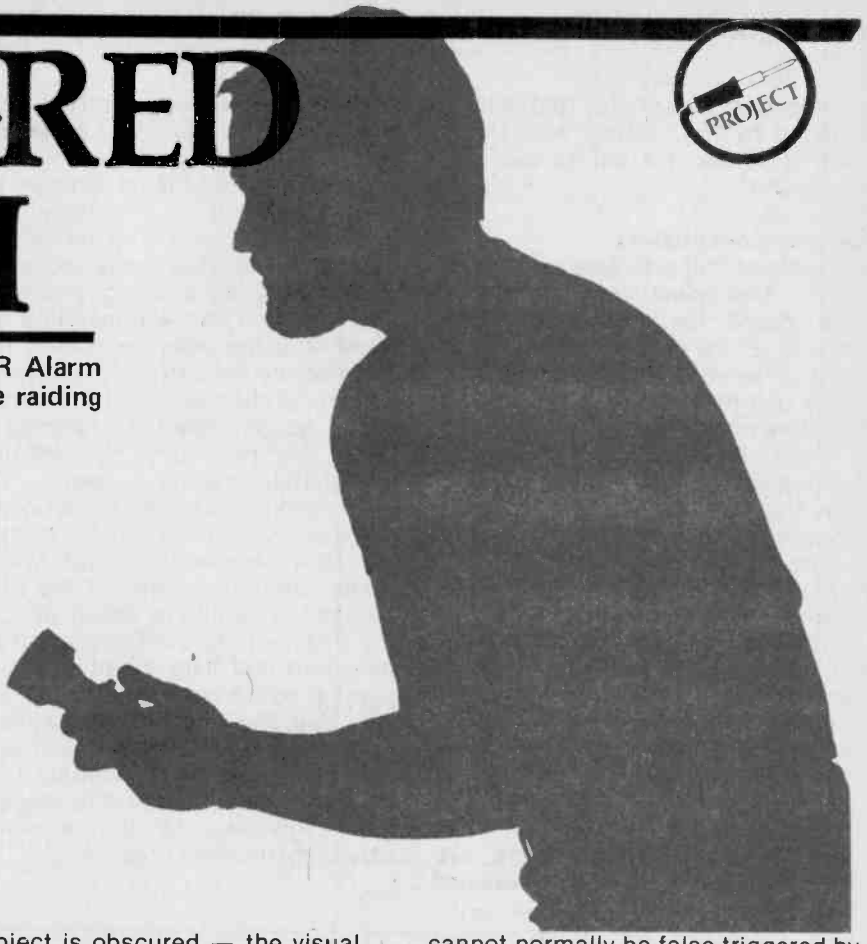

A project to help you sleep nights: Our IR Alarm will warn you of intruders or of the wife raiding the ice box.

THIS UNUSUAL infra-red beam alarm project has a maximum useful range of about 10 meters and can form the basis of a first-class domestic or commercial security alarm system. The project comprises two units — an infra-red transmitter and an IR receiver with a relay output. Both of our prototype units are line powered. The receiver unit contains facilities for operating the relay in either the latch or non-latch mode and for externally disabling the relay (for 20 seconds) via concealed 'by-pass' switches so that authorized persons can pass through the beams without activating the alarm.

The most unusual feature of our alarm system is the use of a dual-beam infra-red link. The two beams are spaced a few inches apart and both beams must be broken simultaneously to operate the alarm. Our system thus responds only to objects greater than the dual-beam size and cannot normally be false-triggered by moths or other insects passing through the beams or settling on the transmitter or receiver diodes.

IR-Beam Principles

Infra-red beam systems present a certain paradox in that the beam is not particularly directional (the transmitter and receiver do not need to be pointing directly at one another) yet the actual 'link' is highly directional and can be broken by a matchstick-sized obstruction placed anywhere along the link. To understand the paradox, try the following simple test.

Pick out a spot-size object (a spot of paint or a screw head, etc). Now move around the room, noting that the object is visible from many different angles and that the visual communication beam is thus not particularly directional. Now, from any convenient viewing position, look at the object with one eye only and move a finger into the line of sight. The object is obscured — the visual link is thus highly directional. This is a good analogy of a conventional single-beam IR system, with the object acting as a single IR source and the eye as a single IR detector. This system is susceptible to false-triggering by moths or other small insects that stray into the beam or settle on the transmitter or receiver diodes.

Make Mine A Double

Now take the above visual test a bit further and pick out two spot-sized objects that are spaced roughly 7.5 cm apart and again check that they are visible from many different angles. Now look at the objects with both eyes and try to break the visual link by moving various items into the line of sight. You'll notice that the visual link can only be broken by a solid item with a width greater than the spacing of the two objects (7.5 cm), but that this item can break the link if placed anywhere along the line of sight.

This latter test is a good analogy of our dual-beam alarm system, with the two object spots acting as the two IR sources and the two eyes acting as the two IR detectors. Our system can only be activated by objects greater than a certain size and cannot normally be false-triggered by moths or other insects that stray into the beams or settle on the transmitter or receiver diodes. The beams are not unduly directional and do not require the use of lenses to complete the IR link, so installation is simply a matter of roughly pointing the transmitter and receiver towards each other.

Transmitter Construction

The transmitter construction should present few problems. We used two PCBs on our prototype, one for the line power supply and the other for the actual transmitter circuit. Take the usual precautions over component polarity when assembling the boards and use sockets when mounting the two ICs.

When PCB construction is complete, make all necessary interconnections, taking special care to ensure that the two infra-red LEDs and LED 1 are fitted with the correct polarity. Now switch on. If all is well, LED 1 will glimmer dimly, indicating correct transmitter action. If you have a 'scope you can check that the correct output waveform is generated across the two IR LEDs.

The completed unit can now be fitted in a suitable case, with the two IR LEDs pointing out from the box front. The IR LED spacing determines

the minimum object size that will be detected by the system; we used a spacing of about 4 cm on our prototype unit.

Receiver Construction

The receiver unit also uses two PCBs, one for the power supply and one large board for the preamp/main receiver. Some care is needed in the construction of the large board, due to the use of a compact layout and miniature components.

When construction of the boards is complete, fit them into a suitable case, together with T1, and make all necessary interconnections, taking special care to ensure that the two IRDs are connected with the correct polarity. The connections between the IRDs and the large PCB should be kept as short as possible to avoid unwanted pick-up. The IRDs should be mounted on the front of the cases, with the same spacing as used for the transmitter IR LEDs.

Setting Up

When construction is complete, set PR1 and PR2 to mid-value and enable the relay in the non-latching mode. Now space the Tx and Rx a meter or two apart, roughly facing one another, and turn the receiver on, but not the transmitter. The relay (RLA) and LED 1 should turn on after a delay of about 20 seconds, indicating that no IR signal is being received.

Now turn on the transmitter and check that the relay and LED 1 turn off. Reduce the setting of delay control PR1 until relay 'chatter' starts to occur, accompanied by flashing of LED 1, and then turn PR1 back until the chatter/flashing ceases. This point marks the minimum delay setting that can be used with the system.

Now temporarily cover (with a finger) the face of one of the IRDs, reduce the setting of sensitivity control PR2 until RLA/LED 1 turn on and then turn PR2 back slightly past the point at which both components turn off. You should now find that RLA/LED 1 turn only when both IR beams are broken simultaneously. The switch-on delay can at this stage be increased beyond the minimum established value if required.

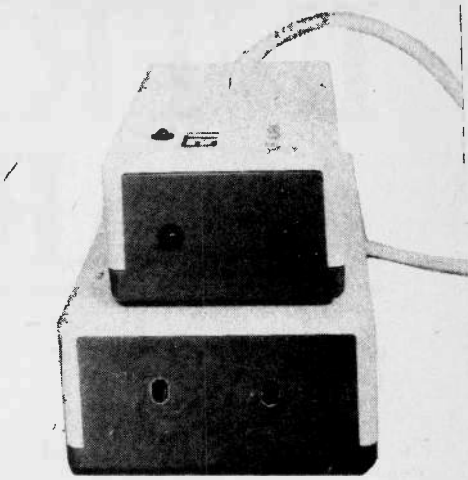

The two IR LEDs and IR detectors are mounted in the case ends.

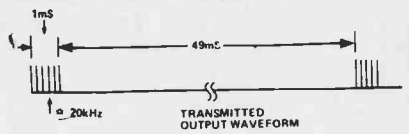

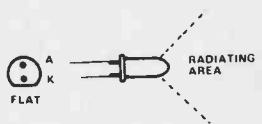

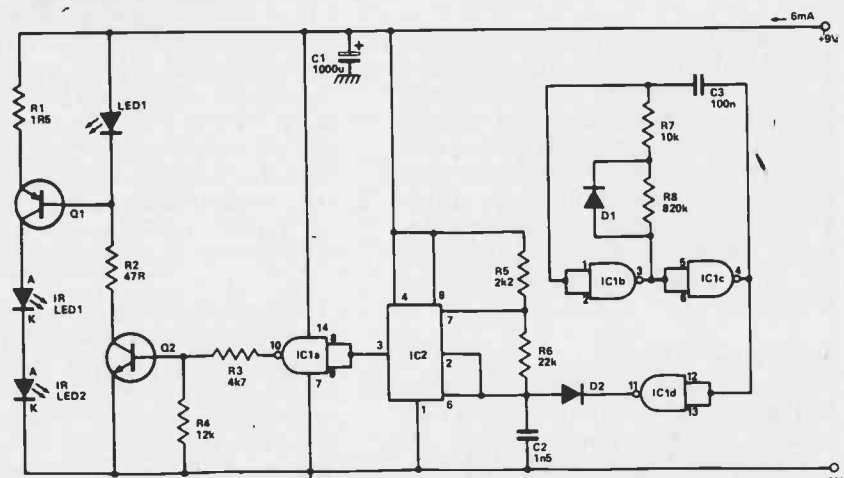

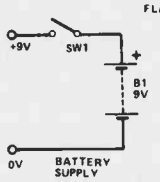

NOTES
D1 D2 ARE 1N4148
Q1 IS 2N2904
Q2 IS MPS6566
IC1 IS CD4011B
IC2 IS ICM7555
IR LED1 2 ARE LD271

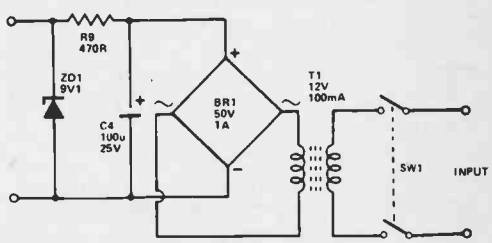

Fig. 1 Circuit diagram of the transmitter and its own power supply.

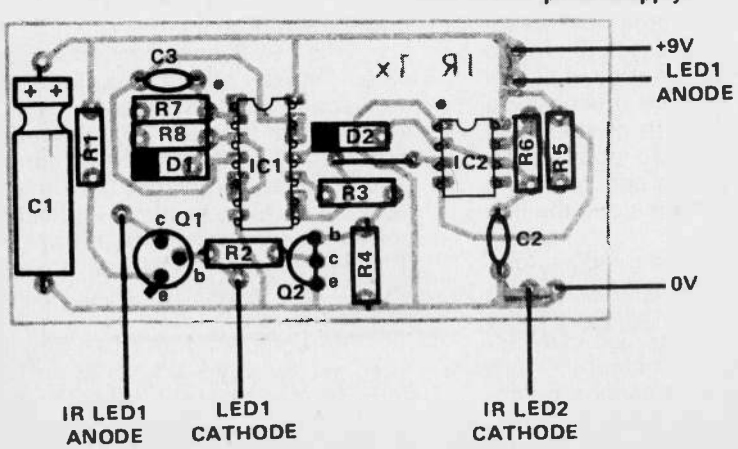

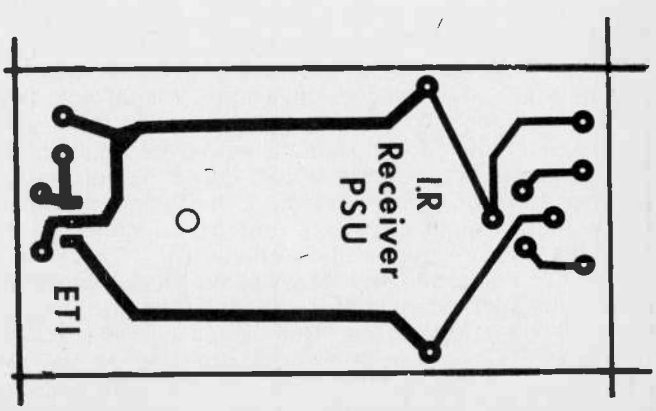

Fig. 2 Transmitter component overlay.

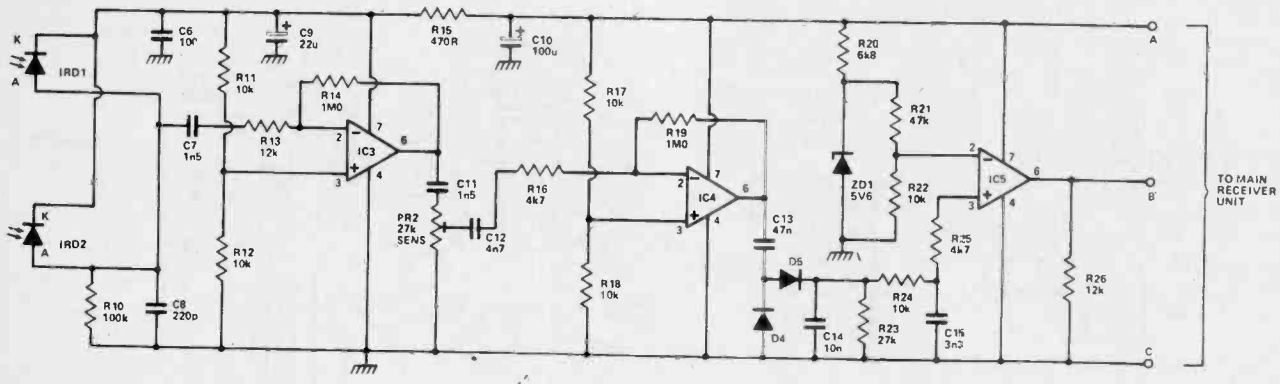

Fig. 4 Circuit diagram of the receiver preamp.

SFH205 CONNECTIOS

NOTE:
D4 -D5 ARE 1N4148
IRD1-IRD2 ARE SFH205
IC3 -IC5 ARE CA3140

Fig. 3 Transmitter power supply component overlay.

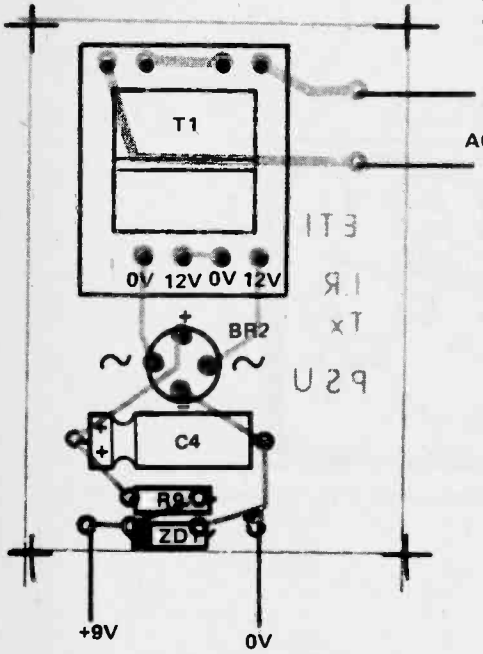

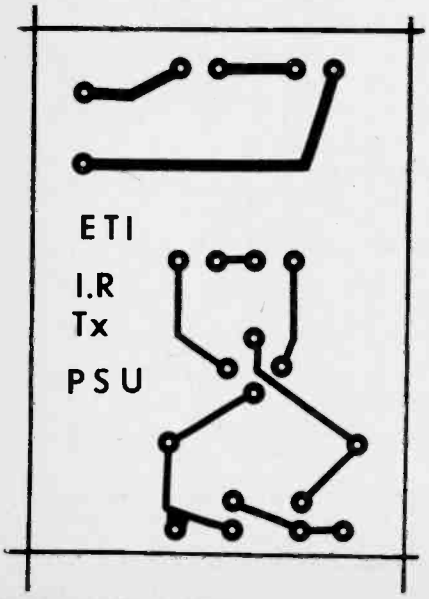

PROBLEMS? NEED PCBs? Before you write to us, please refer to 'Component Notations' and 'PCB Suppliers' in the Table Of Contents. If you still have problems, please address your letters to 'ETI Query', care of this magazine. A stamped, self addressed envelope will ensure fastest reply. Sorry, we cannot answer queries by telephone.

HOW IT WORKS

The IR transmitter beam signal comprises 1 mS bursts of 20 kHz pulses, repeated at 50 mS intervals. The transmitter generates peak IR diode currents of 600 mA but, because of the wide mark/space ratio (1:50) of the transmitter signal, the *mean* transmitter current is a mere 6 mA. This current can be provided by either a battery or a line powered supply. Both options are shown in the circuit diagram.

The basic transmitter signal is generated by IC1 and IC2. IC1b-IC1c are wired as a non-symmetrical astable multivibrator producing alternate periods of 1 mS and 49 mS. The output of this astable is buffered by IC1d and used to gate 20 kHz astable IC2 on and off via D2. The resulting waveform is used to gate 600 mA constant-current generator Q1-R1-LED 1 on and off via IC1a and Q2 and thus feed high energising currents to the two series-connected infra-red transmitter diodes. The high-current transmitter pulses are derived from storage capacitor C1.

The two infra-red detector diodes are connected in parallel and wired in series with R10, so that the detected IR signal is developed across R10. The signal is amplified by IC5. The output of IC4. These two amplifier stages have their responses centered on 20 kHz, with third order low-frequency roll-off provided via C7-11 and C12 and with similar high-frequency roll-off provided by C8 and the internal compensation capacitors of the two ICs.

The amplified output of IC4 is rectified and smoothed by voltage-doubler D4-D5 and associated C-R networks and fed to voltage-comparator IC3, fed to sensivity control RV2 and then further amplified by IC5 (at point B) takes the form of a series of repetitive positive-going pulses when a strong IR beam signal is present, or of a logic 0 signal when the beam is broken. The B signal is passed to the main receiver unit.

To understand the operation of the main receiver unit, assume initially that the emitter of Q1 is shorted to ground. The output signal of the preamplifier circuit is fed to point B and rectified and smoothed by the D1-C1-R1 PR1 network and the resulting DC signal is inverted by IC1a and fed to one input terminal of composite AND gate IC1b-IC1c. This signal takes the form of logic 0 if the IR beam is unbroken, or logic 1 if the beam is broken. The response time to a break can be varied via PR1.

The second input to the composite IC1b-IC1c AND gate is derived from the positive supply line via the R2-C2-R3 switch-on delay network and is normally high (within a few seconds of supply switch-on). The output of the AND gate is fed to the base of relay driving Q1 via R7. SW1 can be used to connect (enable) or disconnect the relay from Q1 collector.

Thus, under normal circumstances, the presence of a beam signal results in the IC1a input to the AND gate being low, in which case the AND gate output is low and Q1 and RLA are off. When the IR beam is broken the IC1a input to the AND gate goes high, so the AND gate output goes high and drives Q1 RLA and LED 1 on (assuming that SW1 is closed). An exception to this action occurs for a brief period following power switch-on of the receiver unit, when the relay-driving circuit is effectively disable via the R2-C2-R3 delay network. Note that the relay can be operated in either the latching or the non-latching mode via SW2.

In the description above we've assumed that the emitter of Q1 is shorted directly to ground. In practice, however, the connection to ground is made via Q2 collector. Normally, the input to IC1d is low, so IC1d output is high and Q2 is driven to saturation via R9 and acts as an effective short circuit, so the above action is normally obtained. Q2 can, however, be cut off at any time, thereby disabling the relay circuit, by momentarily closing PB1 or PB2. This action causes C3 to charge rapidly via R4 and cut off the Q2 base drive via IC1d. The base drive is restored roughly 20 S after the release of PB1/PB2 as the C3 charge leaks away via R5. This 20 S disable facility allows an authorised person to pass through the IR beam without activating the alarm by first momentarily operating one of the PB1/PB2 buttons.

The complete IR receiver circuit is powered from the AC line via the T1-BR1-C5 network and the IC2 12 V regulator chip.

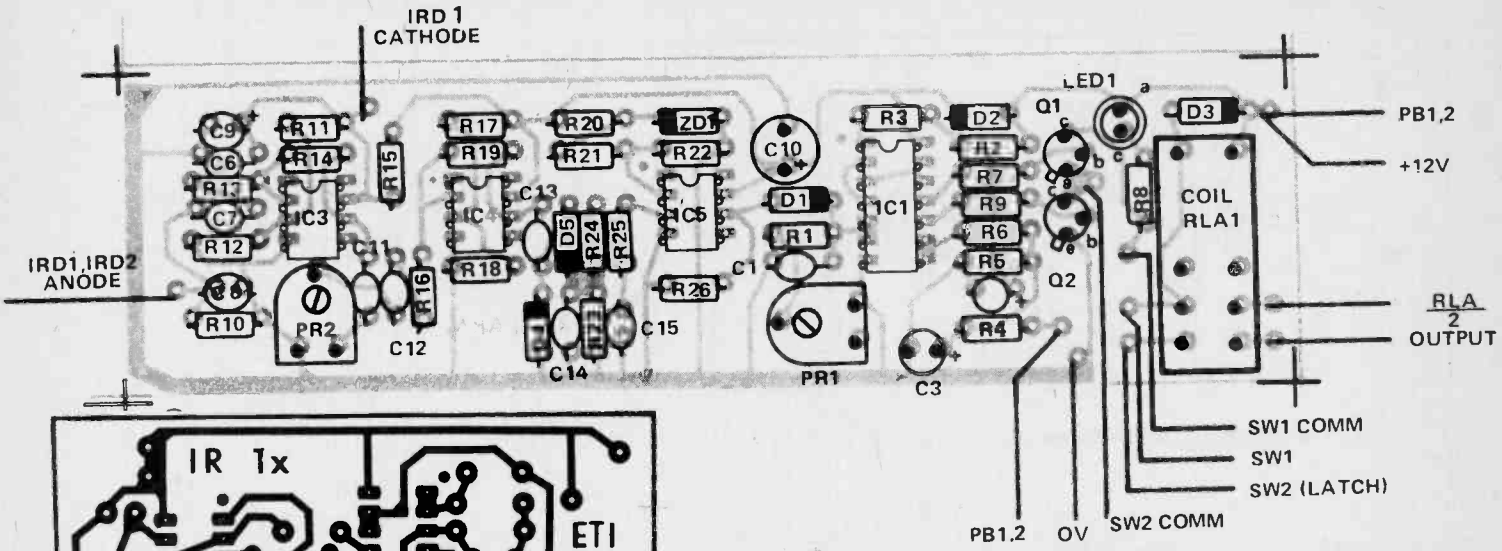

Fig. 6 Component overlay of the combined preamp and receiver board.

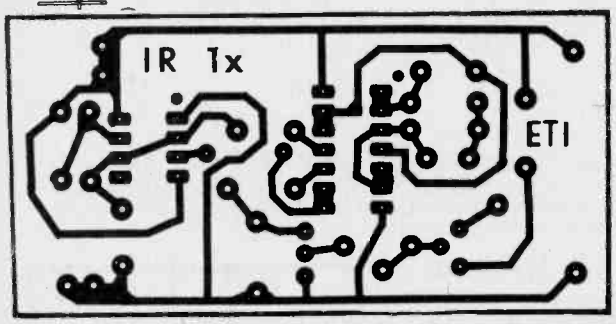

The infra-red intruder alarm transmitter PCB (top) and the receiver PCB (below).

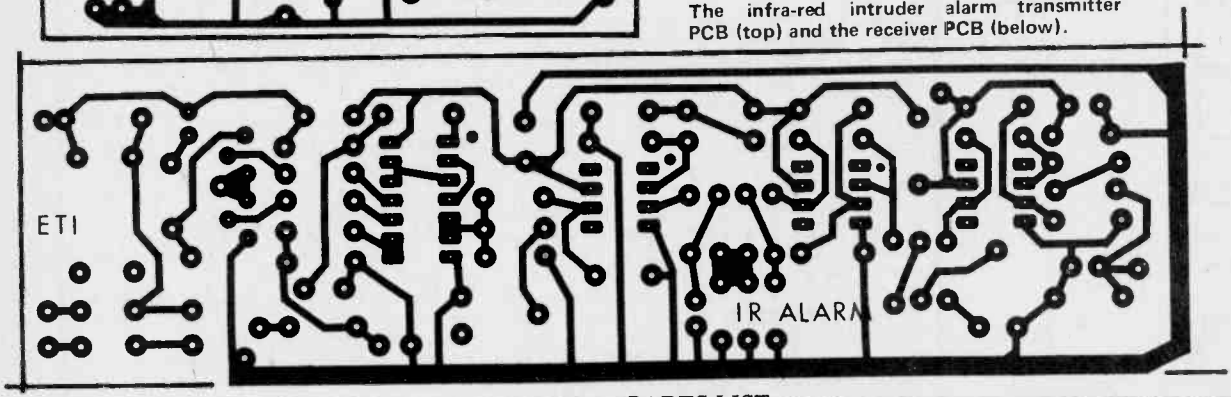

PARTS LIST

Transmitter

Resistors All ¼ W, 5%

R1	1R5
R2	47R
R3	4k7
R4	12k
R5	2k2
R6	22k
R7	10k
R8	820k
R9	470R

Capacitors

C1	1000u 16 V electrolytic
C2	1n5 polycarbonate
C3	100n polycarbonate
C4	100u 16 V electrolytic

Semiconductors

IC1	CD4011B
IC2	ICM7555
Q1	2N2904
Q2	MPS6566
IR LED 1,2	LD271
BR1	50 V, 1A
D1,2	1N4148
ZD1	9V1

Miscellaneous

T1	12 V 100 mA
SW1	DPDT miniature toggle
	Case for transmitter

RECEIVER

Resistors all ¼ W, 5%

R1,5	470k
R2	2M2
R3,7,16,25	4k7
R4,15	470R
R6,13,26	12k
R8	680R
R9	1k2
R10	100k
R11,12,17, 18,22,24	10k
R14,19	1M0
R20	6k8
R21	47k
R23	27k

Potentiometers

PR1	2M2 miniature horizontal
PR2	27k miniature horizontal

Capacitors

C1,4	220n polycarbonate
C2	6u8 25 V tantalum
C3	47u 16 V tantalum
C5	1000u 16 V electrolytic
C6	100n polycarbonate
C7,11	1n5 polycarbonate
C8	220p ceramic
C9	22u 25 V tantalum
C10	100u 16 V PCB type
C12	4n7 polycarbonate
C13	47n polycarbonate
C14	10n polycarbonate
C15	3n3 ceramic

Semiconductors

IC1	CD4093B
IC2	7812 + 12 V
IC3,4,5	CA3140
Q1,2	MPS6515
D1,4,5	1N4148
D2,3	1N4001
IRD1,2	SFH205
BR1	50 V 1A

Miscellaneous

T1	12 V 3 VA
RLA	2 Pole N/O 12V 120R Coil
SW1,2	SPDT miniature toggle
SW3	DPDT miniature toggle
	Case for Receiver

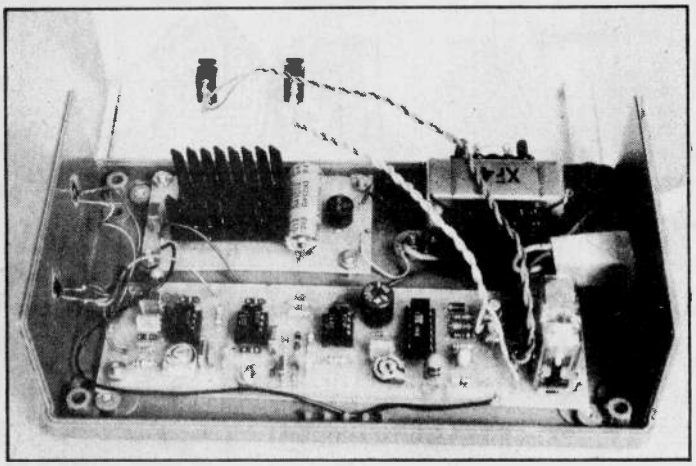

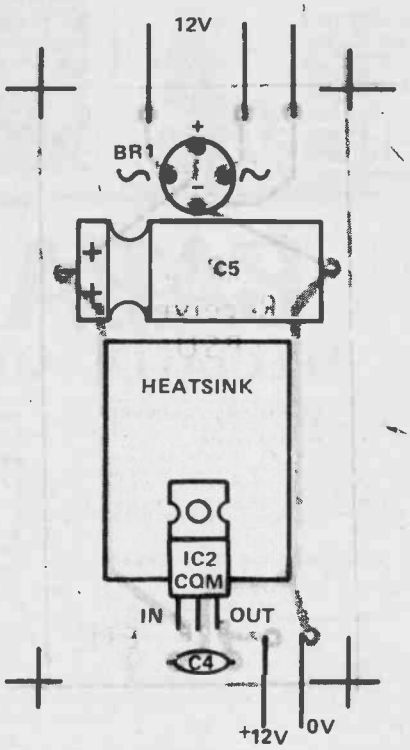

Fig. 7 Component overlay of the receiver power supply board.

Installation

Installation of the alarm system is simplicity itself. Merely space the Tx and Rx the required distance apart (up to several meters), point them roughly towards each other and then adjust sensitivity control PR2 until the required switching action is obtained. Hidden bypass switches (PB1 and PB2) can, if required, be placed on either side of the beam to allow authorized access. ●

Fig. 5 Circuit diagram of the receiver and power supply.

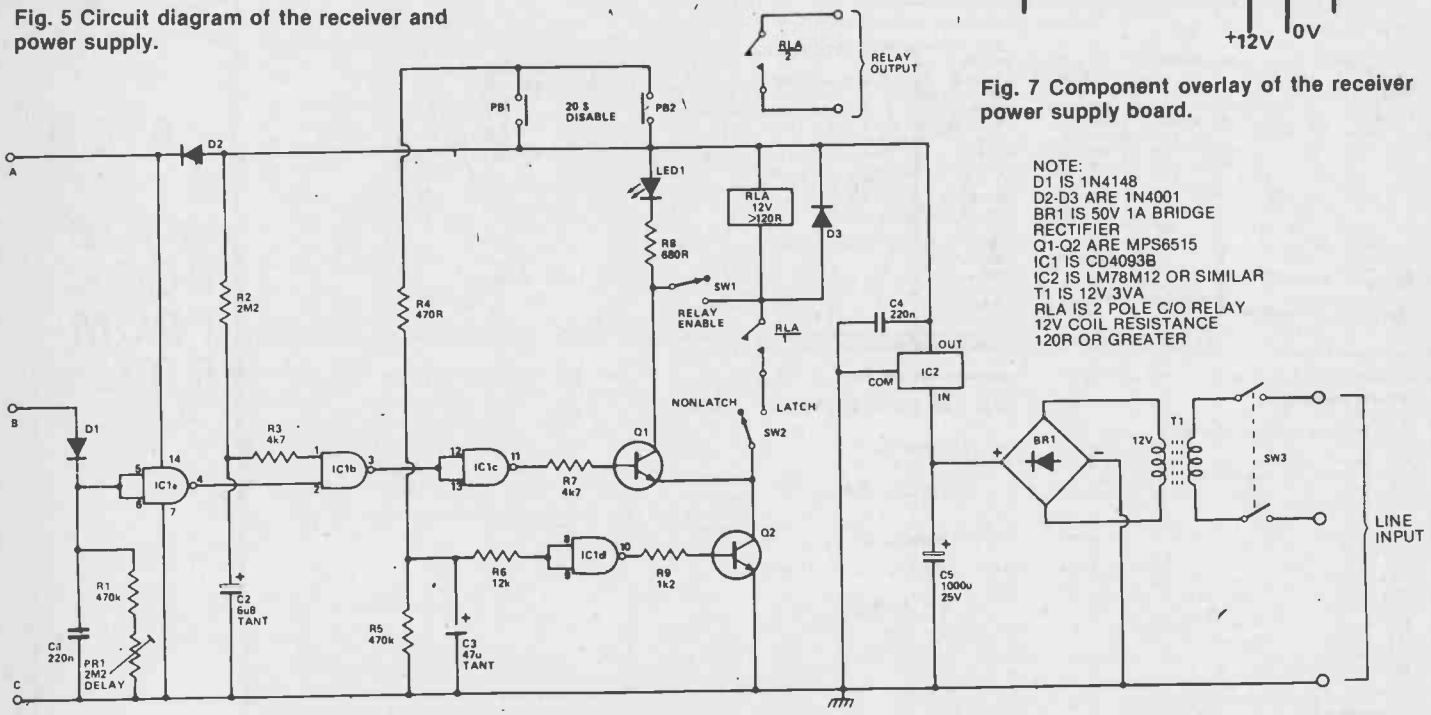

NOTE:
D1 IS 1N4148
D2-D3 ARE 1N4001
BR1 IS 50V 1A BRIDGE RECTIFIER
Q1-Q2 ARE MPS6515
IC1 IS CD4093B
IC2 IS LM78M12 OR SIMILAR
T1 IS 12V 3VA
RLA IS 2 POLE C/O RELAY
12V COIL RESISTANCE
120R OR GREATER

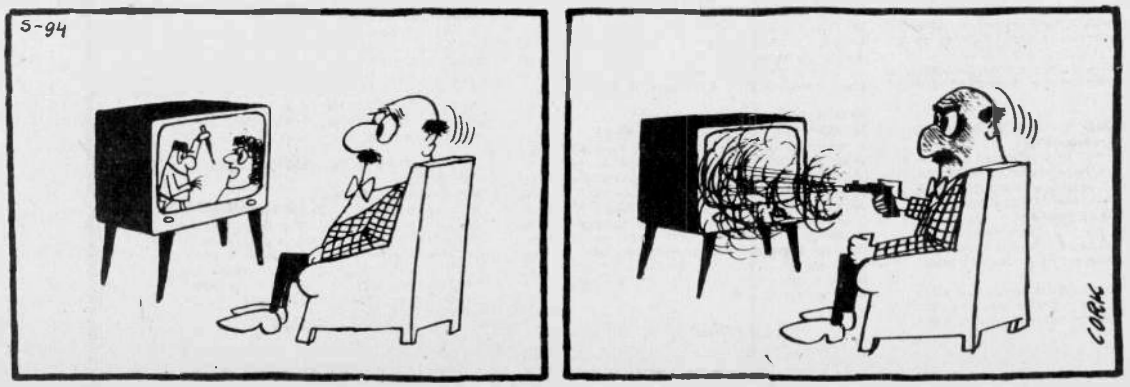

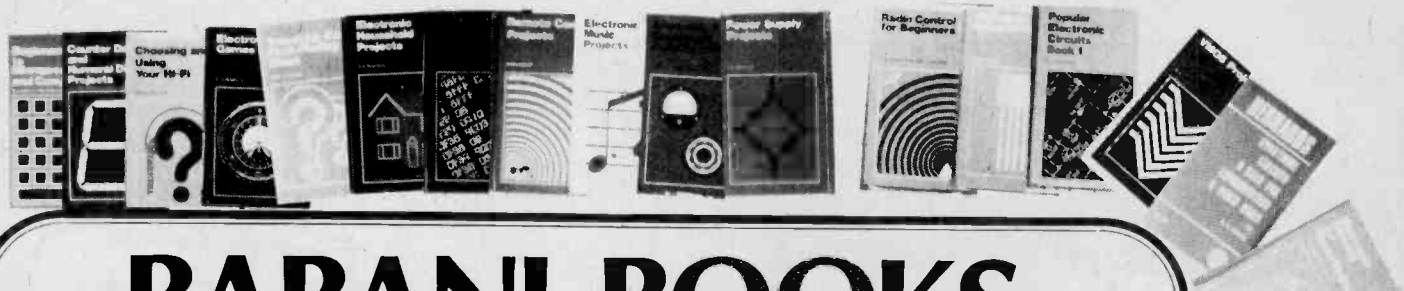

BABANI BOOKS

SPECIALLY IMPORTED FROM ENGLAND

BP35: HANDBOOK OF IC AUDIO PRE-AMPLIFIER AND POWER AMPLIFIER CONSTRUCTION $5.50
F.G.RAYER, T.Eng.(CEI),Assoc.IERE
This book is divided into three parts. Part I, understanding audio IC's. Part II, Pre-amplifiers, Mixers and Tone Controls. Part III Power Amplifiers and Supplies. Includes practical constructional details of pure IC and Hybrid IC and Transistor designs from about 250mW to 100W output.

BP37: 50 PROJECTS USING RELAYS, SCR's & TRIACS $5.50
F.G.RAYER, T.Eng.(CEI),Assoc.IERE
Relays, silicon controlled rectifiers (SCR's) and bi-directional triodes (TRIACs) have a wide range of application in electronics today. This book gives tried and practical working circuits which should present the minimum of difficulty for the enthusiast to construct. In most of the circuits there is a wide latitude in component values and types, allowing easy modification of circuits or ready adaptation of them to individual needs.

BP39: 50 (FET) FIELD EFFECT TRANSISTOR PROJECTS $5.50
F.G. RAYER, T.Eng.(CEI),Assoc.IERE
Field effect transistors (FETs), find application in a wide variety of circuits. The projects described here include radio frequency amplifiers and converters, test equipment and receiver aids, tuners, receivers, mixers and tone controls, as well as various miscellaneous devices which are useful in the home.

This book contains something of particular interest for every class of enthusiast — short wave listener, radio amateur, experimenter or audio devotee.

BP42: 50 SIMPLE L.E.D. CIRCUITS $3.55
R.N. SOAR
The author of this book, Mr. R.N. Soar, has compiled 50 interesting and useful circuits and applications, covering many different branches of electronics, using one of the most inexpensive and freely available components — the Light Emitting Diode (L.E.D.). A useful book for the library of both beginner and more advanced enthusiast alike.

BP44: IC 555 PROJECTS $7.55
E.A. PARR, B.Sc.,C.Eng., M.I.E.E.
Every so often a device appears that is so useful that one wonders how life went on before without it. The 555 timer is such a device. Included in this book are Basic and General Circuits, Motor Car and Model Railway Circuits, Alarms and Noise Makers as well as a section on the 556, 558 and 559 timers.

BP46: RADIO CIRCUITS USING IC's $5.90
J.B. DANCE, M.Sc.
This book describes integrated circuits and how they can be employed in receivers for the reception of either amplitude or frequency modulated signals. The chapter on amplitude modulated (a.m.) receivers will be of most interest to those who wish to receive distant stations at only moderate audio quality, while the chapter on frequency modulation (f.m.) receivers will appeal to those who desire high fidelity reception.

BP47: MOBILE DISCOTHEQUE HANDBOOK $5.90
COLIN CARSON
The vast majority of people who start up "Mobile Discos" know very little about their equipment or even what to buy. Many people have wasted a "small fortune" on poor, unnecessary or badly matched apparatus.

The aim of this book is to give you enough information to enable you to have a better understanding of many aspects of "disco" gear.

BP48: ELECTRONIC PROJECTS FOR BEGINNERS $5.90
F.G. RAYER, T.Eng.(CEI), Assoc.IERE
Another book written by the very experienced author — Mr. F.G. Rayer — and in it the newcomer to electronics, will find a wide range of easily made projects. Also, there are a considerable number of actual component and wiring layouts, to aid the beginner.

Furthermore, a number of projects have been arranged so that they can be constructed without any need for soldering and, thus, avoid the need for a soldering iron.

Also, many of the later projects can be built along the lines as those in the 'No Soldering' section so this may considerably increase the scope of projects which the newcomer can build and use.

BP65: SINGLE IC PROJECTS $6.55
R.A.PENFOLD
There is now a vast range of ICs available to the amateur market, the majority of which are not necessarily designed for use in a single application and can offer unlimited possibilities. All the projects contained in this book are simple to construct and are based on a single IC. A few projects employ one or two transistors in addition to an IC but in most cases the IC is the only active device used.

BP66: BEGINNERS GUIDE TO MICROPROCESSORS AND COMPUTING $7.55
E.F. SCOTT, M.Sc., C.Eng.
As indicated by the title, this book is intended as an introduction to the basic theory and concepts of binary arithmetic, microprocessor operation and machine language programming.

There are occasions in the text where some background information might be helpful and a Glossary is included at the end of the book.

BP67: COUNTER DRIVER AND NUMERAL DISPLAY PROJECTS $7.55
F.G. RAYER, T.Eng.(CEI), Assoc, IERE
Numeral indicating devices have come very much to the forefront in recent years and will, undoubtedly, find increasing applications in all sorts of equipment. With present day integrated circuits, it is easy to count, divide and display numerically the electrical pulses obtained from a great range of driver circuits.

In this book many applications and projects using various types of numeral displays, popular counter and driver IC's etc. are considered.

BP68: CHOOSING AND USING YOUR HI-FI $7.25
MAURICE L. JAY
The main aim of this book is to provide the reader with the fundamental information necessary to enable him to make a satisfactory choice from the extensive range of hi-fi equipment now on the market.

Help is given to the reader in understanding the equipment he is interested in buying and the author also gives his own opinion of the minimum standards and specifications one should look for. The book also offers helpful advice on how to use your hi-fi properly so as to realise its potential. A Glossary of terms is also included.

BP69: ELECTRONIC GAMES $7.55
AUTHOR: R.A. PENFOLD
In this book Mr. R. A. Penfold has designed and developed a number of interesting electronic game projects using modern integrated circuits. The text is divided into two sections, the first dealing with simple games and the latter dealing with more complex circuits.

BP70: TRANSISTOR RADIO FAULT-FINDING CHART $2.40
AUTHOR: CHAS. E. MILLER
Across the top of the chart will be found four rectangles containing brief descriptions of these faults, viz — sound weak but undistorted, set dead, sound low or distorted and background noises. One then selects the most appropriate of these and following the arrows, carries out the suggested checks in sequence until the fault is cleared.

BP71: ELECTRONIC HOUSEHOLD PROJECTS $7.70
AUTHOR: R. A. PENFOLD
Some of the most useful and popular electronic construction projects are those that can be used in or around the home. The circuits range from such things as '2 Tone Door Buzzer', Intercom, through Smoke or Gas Detectors to Baby and Freezer Alarms.

BP72: A MICROPROCESSOR PRIMER $7.70
AUTHOR: E.A. PARR, B.Sc., C.Eng., M.I.E.E.
A newcomer to electronics tends to be overwhelmed when first confronted with articles or books on microprocessors. In an attempt to give a painless approach to computing, this small book will start by designing a simple computer and because of it simplicity and logical structure, the language is hopefully easy to learn and understand. In this way, such ideas as Relative Addressing, Index Registers etc. will be developed and it is hoped that these will be seen as logical progressions rather than arbitrary things to be accepted but not understood.

213: ELECTRONIC CIRCUITS FOR MODEL RAILWAYS $4.50
M.H. BABANI, B.Sc.(Eng.)
The reader is given constructional details of how to build a simple model train controller; controller with simulated inertia and a high power controller. A signal system and lighting for model trains is discussed as is the suppression of RF interference from model railways. The construction of an electronic steam whistle and a model train chuffer is also covered.

221: 28 TESTED TRANSISTOR PROJECTS $5.50
R.TORRENS
Mr. Richard Torrens is a well experienced electronics development engineer and has designed, developed, built and tested the many useful and interesting circuits included in this book. The projects themselves can be split down into simpler building blocks, which are shown separated by boxes in the circuits for ease of description, and also to enable any reader who wishes to combine boxes from different projects to realise ideas of his own.

223: 50 PROJECTS USING IC CA3130 $5.50
AUTHOR: R.A.PENFOLD
In this book the author has designed and developed a number of interesting and useful projects which are divided into five general categories. I — Audio Projects. II — R.F. Projects. III — Test Equipment. IV — Household Projects. V — Miscellaneous Projects.

224: 50 CMOS IC PROJECTS $4.25
R.A. PENFOLD
CMOS IC's are probably the most versatile range of digital devices for use by the amateur enthusiast. They are suitable for an extraordinary wide range of applications and are also some of the most inexpensive and easily available types of IC.

Mr. R.A. Penfold has designed and developed a number of interesting and useful projects which are divided into four general categories. I — Multivibrators. II — Amplifiers and Oscillators. III — Trigger Devices. IV — Special Devices.

BP1: FIRST BOOK OF TRANSISTOR EQUIVALENTS AND SUBSTITUTES $2.80
B.B. BABANI
This guide covers many thousands of transistors showing possible alternatives and equivalents. Covers transistors made in Great Britain, USA, Japan, Germany, France, Europe, Hong Kong, and includes types produced by more than 120 different manufacturers.

BP14: SECOND BOOK OF TRANSISTOR EQUIVALENTS AND SUBSTITUTES $4.80
B.B. BABANI
The 'First Book of Transistor Equivalents' has had to be reprinted 15 times. The Second Book, produced in the same style as the first book, in no way duplicates any of the data presented in it. The Second Book contains only additional material and the two books complement each other and make available some of the most complete and extensive information in this field. The interchangeability data covers semiconductors manufactured in Great Britain, USA, Germany, France, Poland, Italy, East Germany, Belgium, Austria, Netherlands and many other countries.

BP24: 50 PROJECTS USING IC741 $4.25
RUDI & UWE REDMER
This book originally published in Germany by TOPP has achieved phenomenal sales on the Continent and Babani decided, in view of the fact that the integrated circuit used in this book is inexpensive to buy, to make this unique book available to the English speaking reader. Translated from the original German with copious notes, data and circuitry must for everyone whatever their interest in electronics.

BP33: ELECTRONIC CALCULATOR USERS HANDBOOK $4.25
M.H. BABANI, B.Sc.(Eng.)
An invaluable book for all calculator users whatever their age or occupation or whether they have the simplest or most sophisticated of calculators. Presents formulae, data, methods of calculation, conversion factors, etc., with the calculator user especially in mind often illustrated with simle examples. Includes the way to calculate using only a simple four function calculator. Trigonometric Functions (Sin, Cos, Tan). Hyperbolic Functions (Sinh, Cosh, Tanh). Logarithms, Square Roots and Powers.

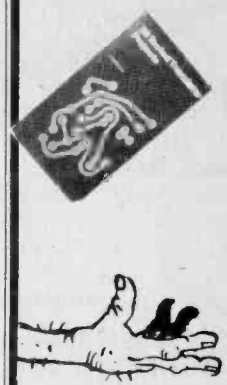

CATCH A GOOD BOOK FROM E.T.I.

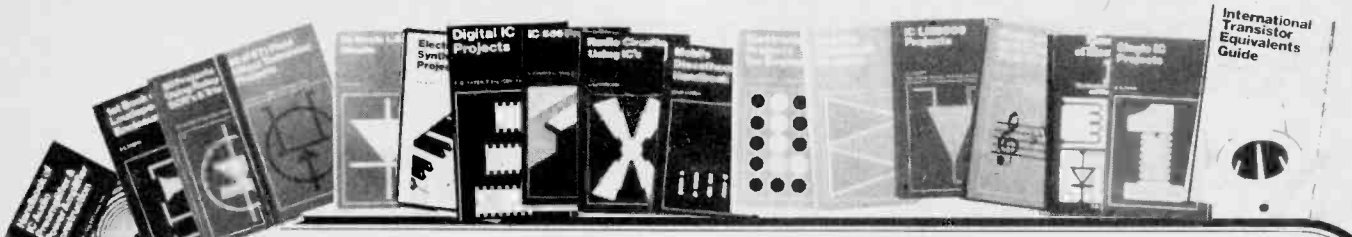

BP81: ELECTRONIC SYNTHESISER PROJECTS $7.30
M.K. BERRY
One of the most fascinating and rewarding applications of electronics is in electronic music and there is hardly a group today without some sort of synthesiser or effects generator.

Although an electronic synthesiser is quite a complex piece of electronic equipment, it can be broken down into much simpler units which may be built individually and these can then be used or assembled together to make a complete instrument.

BP83: VMOS PROJECTS $8.20
R.A. PENFOLD
Although modern bipolar power transistor give excellent results in a wide range of applications, they are not without their drawbacks or limitations. This book will primarily be concerned with VMOS power FETs although power MOSFETs will be dealt with in the chapter on audio circuits. A number of varied and interesting projects are covered under the main heading of: Audio Circuits, Sound Generator Circuits, DC Control Circuits and Signal Control Circuits.

BP84: DIGITAL IC PROJECTS $8.11
F.G. RAYER, T.Eng.(CEI),Assoc.IERE
This book contains both simple and more advanced projects and it is hoped that these will be found of help to the reader developing a knowledge of the workings of digital circuits.

To help the newcomer to the hobby the author has included a number of board layouts and wiring diagrams. Also the more ambitious projects can be built and tested section by section and this should help avoid or correct faults that could otherwise be troublesome.

An ideal book for both beginner and more advanced enthusiast alike.

BP85: INTERNATIONAL TRANSISTOR EQUIVALENTS GUIDE $12.25
AUTHOR: ADRIAN MICHAELS
This book will help the reader to find possible substitutes for a popular user-orientated selection of modern transistors. Also shown are the material type, polarity, manufacturer selection of modern transistors. Also shown are the material type, polarity, manufacturer and use. The Equivalent are sub-divided into European, American and Japanese. The products of over 100 manufacturers are included.

An essential addition to the library of all those interested in electronics, be they technicians, designers, engineers or hobbyists.

Fantastic value for the amount of information it contains.

BP86: AN INTRODUCTION TO BASIC PROGRAMMING TECHNIQUES $8.25
AUTHOR: S. DALY
This book is based on the authors own experience in learning BASIC and in helping others, mostly beginners, to program and understand the language.

Also included are a program library containing various programs, that the author has actually written and run, these are for biorhythms, plotting a graph of Y against X, standard deviation, regression, generating a musical note sequence and a card game.

The book is complemented by a number of appendices which include test questions and answers on each chapter and a glossary.

BP87: SIMPLE L.E.D. CIRCUITS $6.25
AUTHOR: R.N. SOAR
Since it first appeared in 1977, Mr. R.N. Soar's book has proved very popular. The author has developed a further range of circuits and these are included in Book 2. Projects include a Transistor Tester, Various Voltage Regulators, Testers and so on.

205: FIRST BOOK OF HI-FI LOUDSPEAKER ENCLOSURES $3.55
B.B. BABANI
This book gives data for building most types of loudspeaker enclosure. Includes corner reflex, bass reflex, exponential horn, folded horn, tuned port, klipschorn labyrinth, tuned column, loaded port and multi speaker panoramic. Many clear diagrams for every construction showing the dimensions necessary.

BP80: POPULAR ELECTRONIC CIRCUITS — BOOK 1 $8.25
R.A. PENFOLD
Another book by the very popular author, Mr. R.A. Penfold, who has designed and developed a large number of various circuits. These are grouped under the following general headings; Audio Circuits, Radio Circuits, Test Gear Circuits, Music Project Circuits, Household Project Circuits and Miscellaneous Circuits.

Babani Books are now available from Arkon, CESCO, Dominion Radio and General Electronics.

BP49: POPULAR ELECTRONIC PROJECTS $6.25
R.A. PENFOLD
Includes a collection of the most popular types of circuits and projects which, we feel sure, will provide a number of designs to interest most electronics constructors. The projects selected cover a very wide range and are divided into four basic types, Radio Projects, Audio Projects, Household Projects and Test Equipment.

BP 50: IC LM3900 PROJECTS $5.90
H.KYBETT,B.Sc., C.Eng.
The purpose of this book is to introduce the LM3900 to the Technician, Experimenter and the Hobbyist. It provides the groundwork for both simple and more advanced uses, and is more than just a collection of simple circuits or projects.

Simple basic working circuits are used to introduce this IC. The LM3900 can do much more than is shown here, this is just an introduction. Imagination is the only limitation with this useful and versatile device. But first the reader must know the basics and that is what this book is all about.

BP51: ELECTRONIC MUSIC AND CREATIVE TAPE RECORDING $5.50
M.K. BERRY
Electronic music is the new music of the Twentieth Century. It plays a large part in "pop" and "rock" music and, in fact, there is scarcely a group without some sort of synthesiser or other effects generator.

This book sets out to show how electronic music can be made at home with the simplest and most inexpensive of equipment. It then describes how the sounds are generated and how these may be recorded to build up the final composition.

BABANI BOOKS

ELEMENTS OF ELECTRONICS — An on-going series
AUTHOR: F.A. WILSON, C.G.I.A., C.Eng.,
BP62: BOOK 1. The Simple Electronic Circuit and Components $8.95
BP63: BOOK 2. Alternating Current Theory $8.95
BP64: BOOK 3. Semiconductor Technology 8.95
BP77: BOOK 4. Microprocessing Systems And Circuits $12.30

The aim of this series of books can be stated quite simply — it is to provide an inexpensive introduction to modern electronics so that the reader will start on the right road by thoroughly understanding the fundamental principles involved.

Although written especially for readers with no more than ordinary arithmetical skills, the use of mathematics is not avoided, and all the mathematics required is taught as the reader progresses.

Each book is a complete treatise of a particular branch of the subject and, therefore, can be used on its own with one proviso, that the later books do not duplicate material from their predecessors. Thus a working knowledge of the subjects covered by the earlier books is assumed.

BOOK 1. This book contains all the fundamental theory necessary to lead to a full understanding of the simple electronic circuit and its main components.

BOOK 2. This book continues with alternating current theory without which there can be no comprehension of speech, music, radio, television or even the electricity mains.

BOOK 3. Follows on semiconductor technology, leading up to transistors and integrated circuits.

BOOK 4. A complete description of the internal workings of microprocessor.

BP73: REMOTE CONTROL PROJECTS $8.58
OWEN BISHOP
This book is aimed primarily at the electronics enthusiast who wishes to experiment with remote control. Full explanations have been given so that the reader can fully understand how the circuits work and can more easily see how to modify them for other purposes depending on personal requirements. Not only are Radio control systems considered but also Infra-red, visible light and Ultrasonic systems as are the use of Logic ICs and Pulse position modulation etc.

BP74: ELECTRONIC MUSIC PROJECTS $7.70
R.A. PENFOLD
Although one of the more recent branches of amateur electronics, electronic music has now become extremely popular and there are many projects which fall into this category.

The purpose of this book is to provide the constructor with a number of practical circuits for the less complex items of electronic music equipment, including such things as Fuzz Box, Waa-Waa Pedal, Sustain Unit, Reverberation and Phaser Units, Tremelo Generator etc.

BP75: ELECTRONIC TEST EQUIPMENT CONSTRUCTION $7.30
F.G. RAYER, T.Eng. (CEI), Assoc. IERE
This book covers in detail the construction of a wide range of test equipment for both the Electronics Hobbyists and Radio Amateur. Included are projects ranging from an FET Amplified Voltmeter and Resistance Bridge to a Field Strength Indicator and Heterodyne Frequency Meter. Not only can the home constructor enjoy building the equipment but the finished projects can also be usefully utilised in the furtherance of his hobby.

BP76: POWER SUPPLY PROJECTS $7.30
R.A. PENFOLD
Line power supplies are an essential part of many electronics projects. The purpose of this book is to give a number of power supply designs including simple unstabilised types, fixed voltage regulated types, and variable voltage stabilised designs, the latter being primarily intended for use as bench supplies for the electronics workshop. The designs provided are all low voltage types for semiconductor circuits.

There are other types of power supply and a number of these are dealt with in the final chapter, including a cassette power supply, Ni-Cad battery charger, voltage step up circuit and a simple inverter.

BP78: PRACTICAL COMPUTER EXPERIMENTS $7.30
E.A. PARR, B.Sc., C.Eng., M.I.E.E.
Curiously most published material on the microprocessor tends to be of two sorts, the first treats the microprocessor as a black box and deals at length with programming and using the "beast". The second type of book deals with the social impact. None of these books deal with the background to the chip, and this is a shame as the basic ideas are both interesting and simple.

This book aims to fill in the background to the microprocessor by constructing typical computer circuits in discrete logic and it is hoped that this will form a useful introduction to devices such as adders, memories, etc. as well as a general source book of logic circuits.

BP79: RADIO CONTROL FOR BEGINNERS $7.30
F.G. RAYER, T.Eng.(CEI),Assoc.IERE.
The aim of this book is to act as an introduction to Radio Control for beginners to the hobby. The book will commence by dealing with the conditions that are allowable for such things as frequency and power of transmission. This is followed by a "block" explanation of how control-device and transmitter operate and receiver and actuator(s) produce motion in a model.

Details are then given of actual solid state transmitting equipment which the reader can build. Plain and loaded aerials are then discussed and so is the field-strength meter to help with proper setting up.

The radio receiving equipment is then dealt with which includes a simple receiver and also a crystal controlled superhet. The book ends with the electro-mechanical means of obtaining movement of the controls of the model.

These books are specially imported from England by us. All prices include handling and postage. To order, use the order form in this publication or write to:

Electronics Today INTERNATIONAL

Unit 6
25 Overlea Blvd.,
Toronto, Ontario
M4H 1B1

RECORDING TAPE AND TAPE RECORDING

If you're a newcomer to the popular pastime of tape recording and reproduction, here's a complete rundown on the technicalities.

ALL HI-FI reproduction is dependent on the storage of information and its retrieval when required. Information stored on a phonograph form of a modulated groove, and the signal waveform is visible under a microscope or a powerful magnifying glass.

With tape recording, however, the signal is stored by a magnetic oxide that carries an invisible, varying magnetic pattern. To record and recover the information a series of energy conversions is necessary: acoustic-to-electric, electric-to-magnetic, and vice versa.

As with the disc system there are losses and technical inadequacies that have to be compensated for by equalisation. However, in tape recording, equalisation is not a single stage process with mirror image characteristics used on record and playback. Instead, it is a complex two-stage process applied partly when recording and partly on playback, to give an overall flat response. Before we discuss this in detail let us consider the nature of tape and of the recorded signal.

Recording tape consists of a thin, pliable base of plastic material, such as mylar or polyester. The base is coated with a magnetic oxide paste about four microns thick (one micron is one millionth of a metre), the constituents of which are the oxide itself, a binder, a solvent, and a lubricant.

During manufacture the oxide powder, which is in the form of minute needle-shaped particles (or magnetic domains), is given a type of 'grain'. That is, the particles have a common orientation. For some computer and video systems the grain is vertical – perpendicular to the direction of tape travel – but for conventional sound recording the grain is horizontal (Figure 1).

Aligning the particles in this way allows a more concentrated coating to be applied than would random application. For a given type of oxide and a given tape width, the thickness of the coating determines the maximum output possible from the tape.

The most commonly used oxide is gamma ferric oxide (Fe_2O_3) and, until about 1966, it was the only oxide regularly used in the manufacture of magnetic tape. Later developments were chromium dioxide (CrO_2), ferrichrome – a mixture of ferric and chrome coatings – and cobalt. More recently 'metal' tape formulations have appeared.

Early ferric tapes were noisy, had low sensitivity, and poor high frequency response. With improved manufacturing methods the tape was improved immensely and finer oxides, with more regular particle structure, were developed to give lower hiss, higher output levels, and better high frequency response.

Chromium dioxide enjoyed a popular vogue in cassette recording but, while it has a slightly superior high frequency performance at low speeds, it is more prone to distortion than ferric tapes and is now being superseded by ferrichrome. For reel to reel recording at speeds above 95 mm/s there is no advantage to be gained from the use of tapes other than ferric oxide.

Tape magnetisation

When tape is in a so-called demagnetised state the individual particles (domains), although physically aligned,

have no common magnetic sense (Figure 2). The domains may be regarded as minute bar magnets, but when these are of random polarity, as with blank tape, the only output produced by the oxide is in the form of noise. To record a signal on the tape it is necessary to modify the distribution of polarity so that a magnetic analogy of the audio signal applied to the machine's input is written along the tape's length.

To store the input signal on tape it must be converted into a form that the tape will recognise and retain. This conversion is carried out by the tape head (Figure 3), which is effectively a ring-shaped electromagnet. The audio signal, in the form of a varying voltage, is applied to the head winding.

Now, if a current flows through a piece of wire a magnetic field is created around the wire, and if the wire is wound into a coil this field is intensified. If a core, such as soft iron, is inserted into the coil it will become magnetised and remain so until the voltage applied to the coil is removed. A tape head is simply a variation of this idea with the coil curved to bring the two ends (poles) into close proximity.

With a constant voltage applied to the coil, the iron core will have a North and South pole, rather like a horseshoe magnet. If the polarity of the supply voltage is reversed, the two poles will be reversed. If we substitute an audio signal, such as a sinewave, for the constant voltage, the poles will alternate in sympathy with the positive and negative half-cycles of the applied signal.

The strength of the poles at any instant will depend on the voltage of the signal, which in turn depends on the amplitude of the original sound. Because of a shim placed at the front of the head, filling the gap between the pole-pieces, the magnetic flux cannot easily pass from the North to the South pole. In fact, the reluctance of the shim (reluctance is the magnetic analogy of resistance) is so high that it is easier for the flux to complete the magnetic circuit by crossing the air space in front of the shim.

If a tape is passed over this concentrated magnetic flux the magnetic circuit is completed through the tape oxide. The effect of the varying flux on the moving tape is to produce a series of bar magnets along the length of the tape. The stronger the magnetising the greater will be the strength of the bar magnet so formed. The length of a particular magnet depends on the rate at which the applied magnetising force is changing polarity, and on the linear speed of the tape. (For example, at 10 kHz with a tape speed of 190 mm/s, the recorded wavelength takes up 0.019 0.019 mm of tape. Wavelength here is tape velocity divided by frequency.)

In the case of a sinewave input – as shown in Figure 4 – a wavelength consists of two bar magnets of equal length. The positive going half-cycle by South-to-North field, although the opposite could equally well be the case.

So far the concept is relatively easy to grasp. An electrical signal is converted to a magnetic form and is effectively 'written' – in the form of a varying magnetic flux – on the tape oxide. It is then retained and at any time the message may be read by the reproducing system. What complicates the matter is that in both recording and playback the transfer from electrical to magnetic, and from magnetic to electrical energy is non-linear.

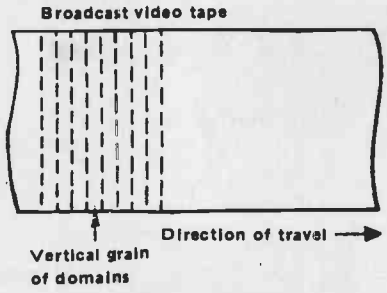

Figure 1. During manufacture the magnetic particles are given a common orientation.

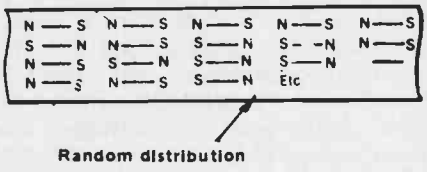

Figure 2. An erased so-called demagnetised tape with a random distribution of domains.

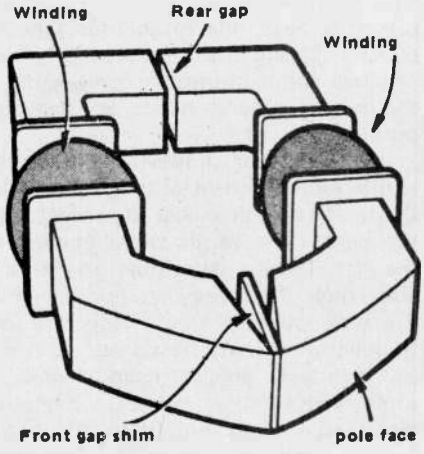

Figure 3. A typical record/playback head.

Transfer

Every tape has what is known as a tape transfer characteristic, which shows the relationship between the applied magnetising force (H) and the resultant tape flux (B). This characteristic will differ from one type of tape coating to another – a typical transfer curve is shown in Figure 5.

The characteristic is derived from a hysteresis loop, which describes the tape flux resulting from the application of one cycle of magnetising force to the oxide. For the sake of simplicity we will ask you to accept the derivation of the hysteresis loop, and from it the tape transfer characteristic (TTC).

The significant thing is the shape of the TTC itself. There is a discontinuity at the origin of the B-H curve, with a nearly linear slope in the central region of the positive and negative sections of the curve. Beyond a given point an increase of applied magnetising force gives no increase in the resultant tape flux: this is the point of tape saturation.

Bias

The TTC is therefore a graph of applied magnetising force versus the resultant magnetic flux induced in the tape oxide. If the input is in the form of a sinusoidal swing either side of the B axis (Figure 6)

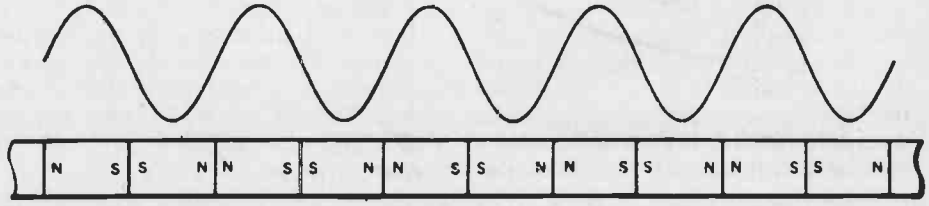

Fig. 4. A recorded tape has areas of magnetic polarisation corresponding to the positive and negative half cycles of the applied waveform.

then the recording will be distorted because of the shape of the characteristic.

To overcome this distortion the input signal must be offset on to the linear part of the TTC. This is done by superimposing the audio signal on a high frequency sinusoidal bias waveform (Figure 7). The shape of the bias envelope is thus a replica of the audio input signal, but this signal is now applied to the linear part of the TTC. One of the objects of bias adjustment is to ensure that the bias voltage gives the required offset of the audio signal on to the linear part of the curve.

Iron oxide and chrome tapes vary widely in their bias requirements – up to 40 per cent more bias being required for chrome tape, which is more consistent than iron and shows little variation between brands. Ferric tape varies considerably from one brand to another, and once a machine has been optimised for a particular brand of tape it is advisable to stick to that brand unless there are compelling technical or economic reasons for doing otherwise. When the recording bias is adjusted it will be found that if too low an offset voltage is used the signal will be distorted: if it is too high, demagnetisation of the high frequencies will occur and the top response will be impaired.

Tape heads

In tape recording we are concerned with two types of magnetic material – that which is magnetically 'hard', and that which is magnetically 'soft'.

A hard material will retain a large proportion of any induced magnetism, which cannot be easily erased. Recording tape is magnetically hard.

A 'soft' material will react quickly to changes in magnetic force, but when that force is removed will retain very little magnetism. This ability to react rapidly to changing magnetic conditions is exactly what is required of a tape head which, consequently, is made from soft material. In this context hardness and softness are magnetic, not physical properties.

Three functions have to be performed by the tape heads, functions that are so individual that, if they are ot be performed efficiently, require three independent heads – erase, record, and playback.

For economic reasons manufacturers often combine the functions of two of the heads, and fit machines with an erase head and a dual purpose record/playback head. Apart from the engineering compromises that such an arrangement necessitates, there are also operational disadvantages, the most serious of which is that the tape cannot be monitored during recording.

The basic elements of a tape head have already been shown in Figure 3. In the case of the erase and record heads the flux due to the current through the windings induces a varying magnetic flux into the core. In the case of the playback head, the magnetised tape induces a varying flux into the poles, which produce an electromotive force (emf) in the windings, and hence an electrical output.

Of particular importance are the width and alignment of the gap, and the shape of the pole-pieces in contact with the tape. The width and alignment of the gap largely determine the attainable high frequency response, while the head contact area affects the low frequency playback response. In order to maintain precise head alignment some manufacturers construct the head block as a single unit with the heads rigidly fixed to a common, machined baseplate.

Erase head

It is a curious feature of the recording process that the bias waveform, which reduces distortion and enables a good recording to be made, also has the characteristics required to erase the tape.

The important factor for erasure is a high enough current to carry the tape into saturation at each reversal of polarity. It is not possible to demagnetise the tape – the particles are always polarised in one direction or another. However, if the distribution of magnetism is completely random, the effect is of a mutual cancellation within the tape, which thus has no external flux.

The object of using a high frequency erase current is that it subjects the individual domains to a large number of reversals of polarity in a short space of time. The tape is moved through a concentrated magnetic field, the effect of which progressively reduces as the tape leaves the head. Therefore the tape is firstly repeatedly saturated at each reversal of polarity as it crosses the head gap. Then the weakening field, as the tape leaves the gap, is unable to reverse all the particles in a given area, and the final polarity a particle adopts is not greatly influenced by the original signal polarity. The tape therefore has a random magnetic distribution and is said to be demagnetised.

In practice it is possible for some of the particles to recover partially their original magnetic sense. For this reason a second pass over the erase head is often necessary to obtain complete erasure. To increase the depth of erasure many tape recorders are now fitted with double-gapped erase heads that give a similar effect to two passes of the tape across the head. The erase gap may be as much as 20 microns although with a double-gapped head the second gap is usually considerably smaller. The erase frequency must be high enough to produce the rapidly reversing flux and to avoid the generation of spurious beat frequencies (with 19 kHz and 38 kHz signals from stereo tuners). It is usually in the region of 80 to 150 kHz.

Record head

Whereas at the erase head a saturating magnetic force is used to remove any existing signal waveform from the tape,

at the record head a bias current of precisely controlled amplitude is mixed with the audio signal to minimise distortion of the audio waveform.

The record head gap is much smaller than the erase head. It must be small enough to produce a high flux density, but wide enough to allow for a number of changes of polarity of the bias waveform. Depending on the bias frequency, tape speed, and gap dimension, each domain is subjected to around 10 cycles of bias current. Again, the bias results in a polarisation of the magnetic domains but, because of the presence of the audio signal, as the bias field diminishes, so the polarity of the domains is increasingly influenced by this varying signal.

Thus, instead of the tape reverting to a natural state it is magnetised according to the amplitude and frequency of the applied audio signal. This means that the tape is recorded as it is leaving the head gap, and the gap itself is not too ciritical as far as the audio waveform is concerned. A typical record head gap for a machine running at 95 and 190 mm/s would be six microns.

The relationship between the current in the head winding, the permeability of the core, and the flux concentration at the gap is not linear. To overcome this a high reluctance rear gap is used that is analogous to a constant current resistor. The reluctance of the rear shim is so high in comparison with the rest of the magnetic circuit that it swamps any variation in the permeability of the core material, and a virtually linear flux is produced at the front gap. The rear gap is usually about 10 times that of the front.

Playback

A tape head is a piece of precision engineering. In the case of playback head the tolerances are so closely defined that there is virtually no margin for error. Even a slight departure from specification can lead to a major loss of performance.

One of the crucial dimensions is that of the playback head gap. Due to the nature of the head material, the flux coupling with the poles, and the head-to-tape contact area, the effective gap may be as much as twice the physical gap. Because the playback head tolerances are so tight, if a dual purpose head is constructed it will, to all intents and purposes, be a playback head.

The output from the playback head depends on the efficient coupling of the surface induction on the tape with the head and its associated preamplifier. A playback head core has extremely high permeability – several thousand times

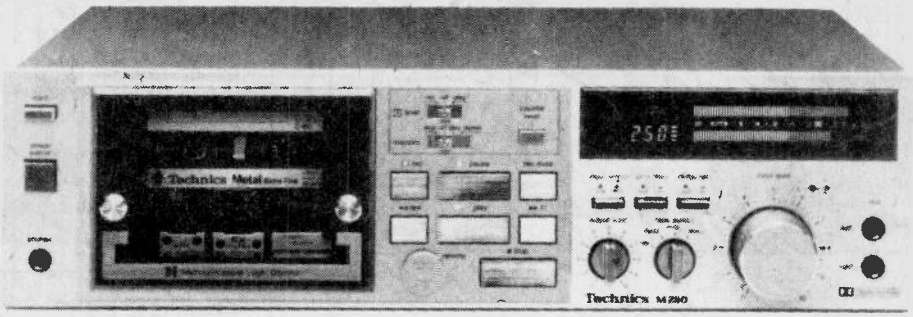

The advent of high energy tapes enables cassette decks to match performance with their reel to reel big brothers. The cassette format allows sophisticated and computerized control of playback and record operations.

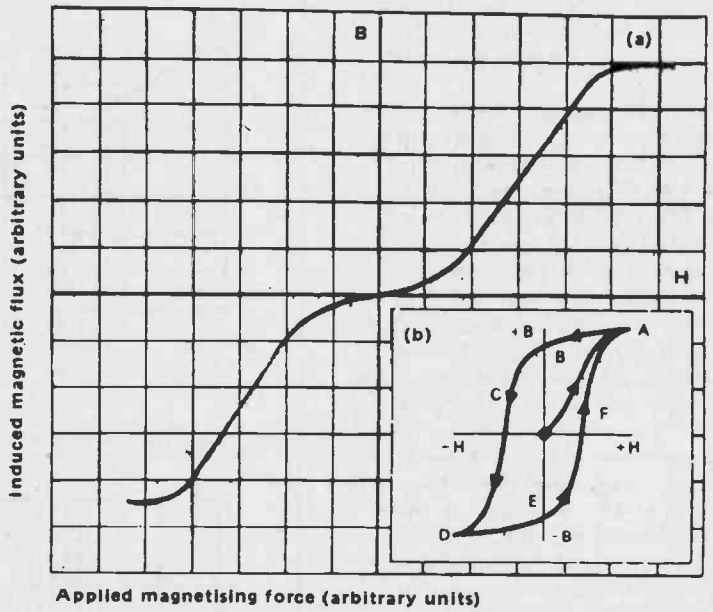

Fig. 5. The non-linear tape transfer characteristic (a) is derived from the hysteresis loop (see insert). It is a graph of induced magnetic flux versus applied magnetising force.

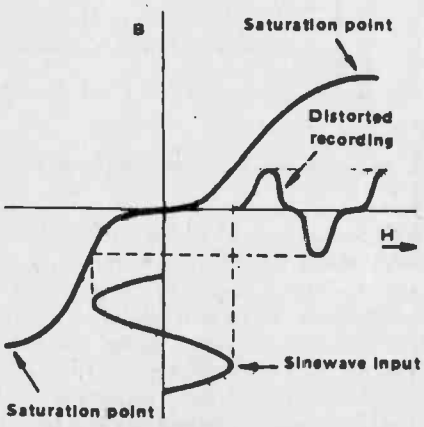

Fig. 6. Distorted recording results form non-linear tape transfer characteristic.

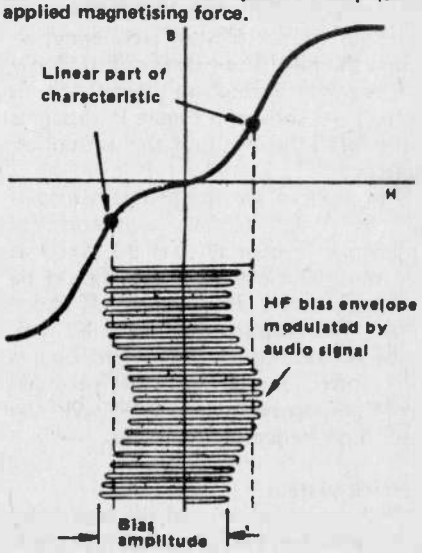

Fig. 7. The distortion can be minimised by off-setting the audio signal onto a high frequency bias voltage.

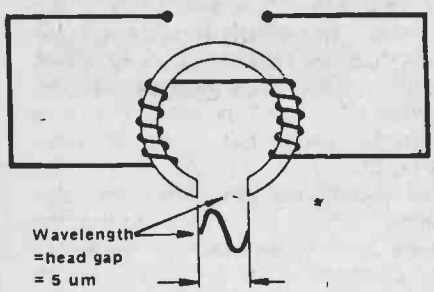

Figure 8. When the recorded wavelength equals the playback head gap there is no flux linkage with the head core and consequently no output.

that of air – so that the tape flux at the point of intimate contact with the head will seek the easy path through the head core.

The changing flux pattern as the tape moves across the head results in an emf in the head windings, a voltage that increases with frequency because it is proportional to the rate of change of flux. Hence, doubling the frequency will double the output from the head – in other words the output from an ideal head would rise at 6 dB per octave.

In practice a straight line graph is not realised, and the 6 dB per octave slope is only achieved at low and mid frequencies. At the upper end of the audio spectrum a point is reached (Figure 8) where the recorded wavelength is comparable with the effective gap of the playback head. When this point is reached the variation of flux will occur within the gap dimension and consequently there will be no output from the head. The frequency at which this happens is known as the extinction frequency, although the ideal slope does not suddenly fail as the extinction frequency is reached. As shown in Figure 9, it begins to roll off at about half the extinction frequency.

Now we can see the problem in perspective. To achieve a theoretical extinction frequency of 20 kHz at 190 mm/s the effective gap should be 9.5 um, giving a physical gap of about 5 um. The response of the head may not be as good as the theoretical figures given above, but in general the head with the narrower gap will have the better high frequency response.

Playback system

We have briefly discussed the principles of the recording and playback processes. Let us now consider how the playback and recording chains are interlinked and equalised so that a flat overall response can be obtained.

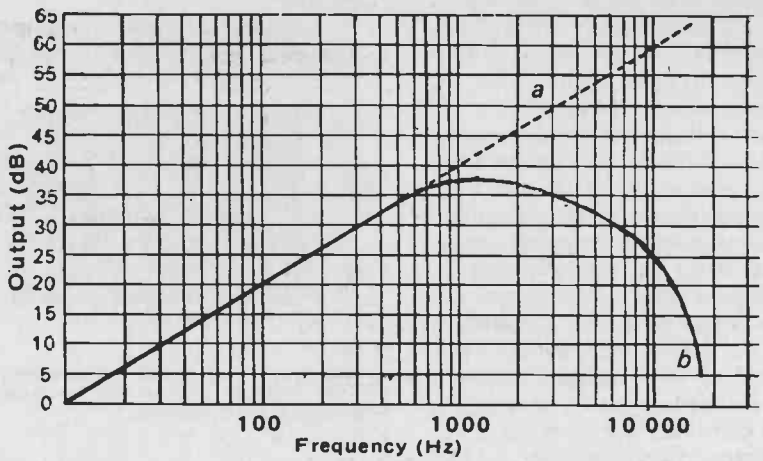

Figure 9. Playback head responses – (a) ideal response and (b) practical response with head loses

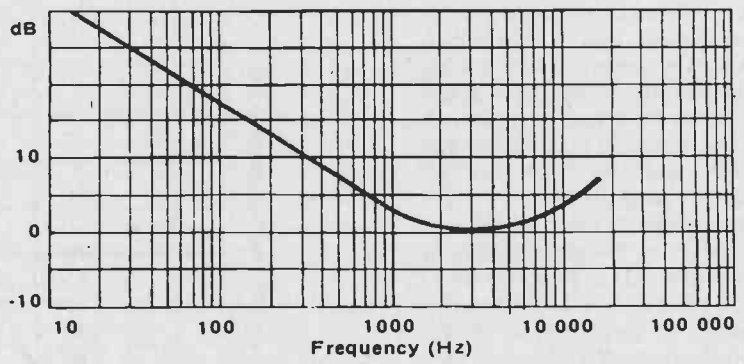

Figure 10. Theoretical response of the playback amplifier.

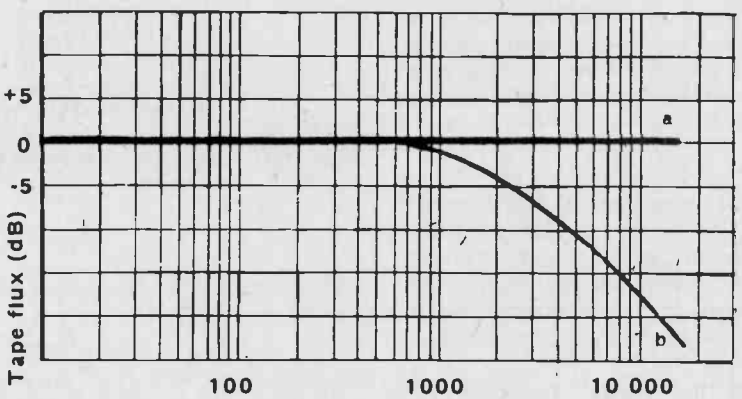

Figure 11. Ideal recorded tape flux (a) and typical tape flux allowing for head and other losses (b).

We have already referred to the extinction effect, which is a major cause of high frequency loss. In addition to this, when the recorded wavelength is very short the individual poles are in such close proximity that some of the flux fails to emerge from the surface of the tape. Instead, it completes the manetic circuit through the oxide and so does not energise the tape head. Other losses are due to imperfect head-to-tape contact, and coupling losses between the head and preamp. At the bass end, where the wavelength is long compared with the head gap, the output may fall at a rate greater than 6 dB per octave as part of the flux path is through the air.

To compensate for the response at the head it is apparent that the playback amplifier must have an initial slope falling at 6 dB per octave, it must flatten out in the mid frequency range and then add a degree of boost at the top end to compensate for the head losses. Figure 10 shows

the theoretical response of the playback amp.

Record system

The signal current is fed through a resistor to the head winding and mixed with the bias waveform. The value of the resistor is such that it is well in excess of any change in impedance of the head (which increases with frequency). The effect is that variations of head impedance are minor in comparison with the value of the feed resistor, resulting in a constant current input to the head. Thus, for a signal of given amplitude, the head current is constant regardless of frequency.

In theory this would appear to give a constant level of magnetic induction on the tape oxide. Again the ideal is not realised because of high frequency losses (Figure 11). In the main these are due to partial erasure of the signal by the bias, the falling permeability of the tape with increasing frequency, and poor head-to-tape contact. To compensate for these losses the theoretical response of the record amplifier should be the inverse of Figure 11. In fact it is not quite this simple.

If sufficient pre-emphasis were applied during recording to give constant tape flux with frequency, the tape would saturate at high frequencies. Also, as we have seen, the response of the playback head is not flat, and the response curve of Figure 10 would not produce a flat output from a tape flux that held constant with frequency.

Equalisation

What is required is a two-part compensation process, part of which is applied on recording and part on playback. The result should be a flat response over a given frequency range. However, because the losses vary not only with frequency but also with tape speed, the equalisation must be switched to give the optimum response curve for each tape speed.

Anyone with a turntable expects to be able to play any phonograph record and to achieve a consistent standard of reproduction. Similarly it should be possible to play a tape recorded on one machine on any other machine. Without this requirement each designer could equalise for the various losses in any way and, provided the machine had an overall flat response, the customer would be happy — until attempting to play someone else's tape on that machine!

Obviously a standard is required, but to what does it refer?

It describes the recording characteristic, which is a curve of recorded tape flux level against frequency, and when plotted appears as in Figure 12. Tape flux is measured in nanowebers per metre (nWb/m) of track width, and recording characteristics are commonly referred to in terms of the circuit time-constants that would produce an impedance curve of the same shape.

The problem is to arrive at a recorded tape flux (not frequency response) as per Figure 12, having taken account of the various losses in the recording system. To do this the designer usually begins with the playback system, knowing that if a calibration tape can be playback accurately, one of the variables is fixed — playback equalisation. A recording amplifier can thus be devised that will produce the tape flux levels shown in Figure 12, and a flat overall response will result.

To summarise this rather complex process: there are losses during the various energy conversions in the record and playback chains. Equalisation cirucits are used during record and playback such that an overall flat response is obatianed. Because the losses in the system vary with tape speed, a family of curves is required if a machine has more than one speed.

To ensure that tapes can be interchanged it is essential that a tape recorded on one machine shall be reproduced satisfactorily by another. For this reason specific recording characteristics have been adopted, and provided a machine conforms to the appropriate standard, compatibility will be achieved.●

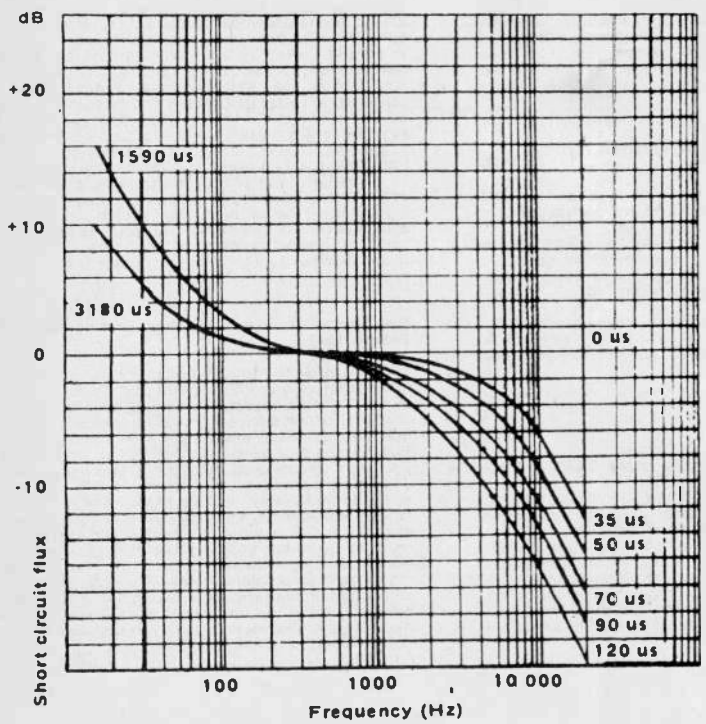

Figure 12. Recording characteristics to BS 1568: 1970.

AUDIOPHILES! SYNTH NUTS!

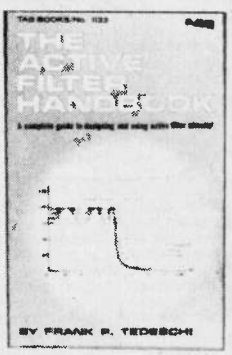

No electronic enthusiast should be without one! The Active Filter Handbook discusses all types of filters. The author starts with two fundamental filter types, Butterworth and Chebyshev, and explains all definitions, concepts and fundamentals. Unlike others, this book does not ignore mathematics, but rather shows the derivation of all design equation.

Practical applications are included and cover such diverse areas as graphic equalisers and communications modems.

Send $9.75 (cheque or money order) to ETI Book Service, Unit 6, 25 Overlea Blvd, Toronto, Ontario M4H 1B1 or use the convenient order form elsewhere in this issue. Order TAB No. 1133.

Tab books from ETI

Master Handbook Of 1001 Practical Circuits
TAB No.800 **$18.30**
Master Handbook of 1001 More Practical Circuits
TAB No. 804 **$18.35**

Here are IC and transistor circuits for practically anything and everything — with ALL the data needed to put them to work. The ideal schematic source-book for all active technicians, engineers, experimenters, amateurs — for anyone who must occasionally or regularly construct or adapt electronic circuits for any purpose whatsoever. You'll find any circuit you're ever likely to need in the pages of this rich volume. The schematics are classified according to general application, and the Sections themselves appear in alphabetical order.

99 Test Equipment Projects You Can Build
TAB No. 805 **$11.75**

Here's the A to Z guide you need to build all sorts of electronic test equipment — from a simple signal tracer to a sophisticated modularized 50 MHz counter — and virtually everything in between! Here are voltmeters and ammeters, capacitance meters, resistance and impedance measurers, testers for solid-state components, digital volt-veters, calibrators and frequency standards, signal generators, frequency counters, oscilloscopes, and a variety of RF test equipment. The variety is incredible and almost endless . . . virtually every test instrument you could possibly want to build for yourself.

The Power Supply Handbook
TAB No. 806 **$11.75**

A complete one stop reference for the hobbbyist and engineer. Contains high and low voltage supplies as well as mobile and fixed units. Everything you need to keep your project perking with the right volts and amps.

Build Your Own Working Robot
TAB No. 841 **$8.55**

Here are complete instructions — plans, schematics, logic circuits, and wiring diagrams — for building Buster. Not a project for novices. Buster is a sophisticated experiment in cybernetics. You build him in phases, and watch his personality develop as you add progressively more advanced circuitry to his mainframe. The first of this three-phase robot, Buster I, is "leash-led" and dependent on his master for decision-making; you create the "animal" and give him wheels, steering capability, and the capacity to "understand" your basic commands. Phase II makes Buster more independent. Now he has a basic brain he can use to decide when he's in need of a battery charge, or trapped into a physically binding situation he can't get out of.

A Beginner's Guide To Computers & Microprocessors — With Projects
TAB No. 1015 **$9.70**

Here's a plain-English introduction to the fascinating world of the microcomputer — it's capabilities, parts, functions, and programming . . . and how you can have one in your own home. Numerous projects, using actual computer parts, demonstrate the operation of a computer and lead to the assembly of a working microcomputer capable of performing many useful functions around the home and office.

How To Design, Build & Test Complete Speaker Systems
TAB No. 1064 **$11.85**

If you've always wanted to build your own speaker system, here's a book crammed with everything you need to know to do it right . . . the first time! It contains a variety of ready-to-build speaker system projects, from simple speaker-in-a-box setups to complex multi-driver systems, plus all the information even a beginner needs to design and build his or her own.

This clear guide shows you exactly how a speaker works, how its power and resonance are attained, and how speakers may differ from one another. It's as thorough a book as you'll find on the complete subject of speakers, speaker systems, and enclosures.

Digital Interfacing With An Analog World
TAB No. 1070 **$12.35**

Are you looking for ways to really put your microcomputer to work? This book tells you how to go about it — how to convert energy produce by pressure, force, position temperature, etc. into an electrical voltage or current that your microcomputer can deal with. It's for the user who views the microcomputer as a bit of hardware to be applied, and who views software as either a simple set of instructions to make the machine go or, more importantly, as a valid substitute for hardware. It presents information, in handbook style, for users of microcomputers who want to design a device or system with a microcomputer at its heart.

Very simply, this book is for the microprocessor/computer user who wants to use the machine to measure certain conditions, or to control external devices.

The Complete Handbook Of Robotics
TAB No. 1071 **$10.90**

Create your own robot? All the information you need to build a walking, talking friend and companion or a helpful servant appears in this book!

Your robot can take on many forms and operate in any way you choose. Every possible option is covered in minute detail — including light, sound, heat, and proximity sensors, minicomputer "brains" and more.

Whether you want a robot for a experimenting, for a security application or to perform some task suitable for "smart" machine, all the ideas you need are packed into this book.

The Active Filter Handbook
TAB No. 1133 **$9.75**

A designer's and users' guide to the theory and applications of active filter circuits.

For anyone interested in electronics, this handy one-stop guide to modern filter technology will prove invaluable. It introduces filters and their purpose, compares different filters, and covers LC passive filter operation, op amps, Butterworth filters, Chebyshev filters, low-pass filters, high-pass filters, etc. This all-inclusive manual offers coverage of electronic math and basic electronic theory also. Cannot be beat for a complete and practical discussion and examination of filter techniques.

Electronic Music Synthesizers
TAB No. 1167 **$8.40**

If you're fascinated by the musical possibilities of elec-tronic music synthesizers, this book provides all the information you need to choose, use, adapt, or even build a synthesizer. It's filled with data on synthesizers in general. . .and on individual models, candidly explaining the advantages and disadvantages of each one. Such musical workhorses as the Moog (Minimoog and Polymoog), ARP 2600, Oddessy, PAIA, Oberheim, RMI and EML synkey synthesizers are presented in full detail. Also included is a Chapter on accessories and on the various components that can, with the help of this book, produce almost any sound you hear . . . or can imagine!

But that isn't all — once yo've learned what makes a synthesizer work and how to produce all kinds of music and sound effects, Horn includes a full section on how to build your own. Ther's even a list of universal patch diagrams to assist you in your tinkering and experimenting. If you'd like a book that gives you solid, practical help in choosing and using — or building — a synthesizer, this informative manual is your best choice.

Towers International Op Amp Linear IC Selector
TAB No. 1216 **$11.40**

If you deal with op amps (and linear-ICs with op amp characteristics) in any way, here's a wealth of practical information that will help you solve selection, design, and replacement problems. This international guide includes basic specifications for over 5,000 op amps and linear ICs, and contains data on ratings, characteristics, case details, terminal identifications, applications use, manufacturers, and substitution equivalents. Here you'll readily find data on a specific op amp when you know only the type number. Plus, you'll be able to locate the manufacturer of the device. And, particularly important with obsolete units, you'll find guidance on a readily available substitute.

A series of Appendices includes a glossary of op amp terms, tabulation codes for manufacturers, manufacturer house numbers, tabulation codes for applications, case outline and leadout diagrams, and codes for leadout connections. If you want the latest, most complete details on op amp-linear-IC's available today, you'll find it in this book.

How To Build Your Own Self-Programming Robot
TAB No. 1241 **$11.75**

This is a straightforward how-to book about machine intelligence — a practical guide that shows you how to build a robot capable of learning how to adapt to changing circumstances in its environment. The unique little creature described in this book, named Rodney, can pick up signals and stimuli from his environment and develop perceptions just like humans and higher animals do. Yet Rodney is fully trainable, and his "personality" can be altered and molded by human intervention. All in all, Rodney is in a class by himself, and is a most remarkable and fascinating machine — he can program himself to deal with the problems of the moment and devise theories for dealing with similar problems in the future. Yes, Rodney is self-programming, and as a result no two Rodneys behave exactly the same way. In fact, if you wipe out his self-generated memory, he'll develop another one that's somehow different from the first.

To get yours, fill in the form in this issue or write to ETI Magazine, Unit 6, 25 Overlea Blvd., Toronto, Ontario M4H 1B1. Please allow six weeks for delivery. Due to sometimes uncertain supplies, some books may not be in stock, please indicate whether you wish your order held or if you wish your money refunded.

ANATOMY OF A MICRO

A lot happens inside a micro during program execution. We take a look.

WHILE MANY PEOPLE look upon the microprocessor as a 'black box', a true understanding of its inner workings is vital to its full exploitation. It is important to understand at this early stage that the much-vaunted micro is merely a very complex piece of electronic logic and is totally useless on its own. Without the ranks of qualified engineers, programmers and other allied trades, the supposedly mighty micro is an incomprehensible lump of high technology!

Architectural Heritage

The average general purpose computer can be divided into a number of discrete elements. One of these components is the Central Processing Unit or CPU, and this can be sub-divided still further. The microprocessor is really a totally integrated central processing unit; it still needs all the other bits and pieces to make it perform as a computer. Some of the later designs do incorporate internal memory areas and one or two even have self-contained programs, the new SC/MP from National Semi with the NIBL BASIC built in being a prime example.

The three main sections of the CPU are the registers, the ALU and the control circuitry.

Taking them in order we find that the registers are a group of storage units within the CPU. Some of these are available to the programmer, others are used solely by the processor as counters or storage locations. The most important of these is the Accumulator. This register is used to store the data to be processed by the ALU, a typical instruction being to add the contents of some memory location to the Accumulator and to hold the result in the Accumulator for further processing. Many of the current families have other general purpose registers for data storage – the 8080 has six for example.

Flagging Already?

Closely associated with the Accumulator are a number of special registers called the flags. These are used to indicate the status of the ALU after an operation. Typical flags are 'carry' showing than an arithmetical carry has occurred, 'overflow' which simply shows that the number has exceeded the word length of the Accumulator and a number of bits which indicate the sign of the result in the Accumulator. There is also one other register connected with the Accumulator and ALU and this is the index register. This holds any offsets used in addressing in indexing and its inclusion is machine dependent.

The processor also requires a number of special registers; the instruction register and the program counter being two typical examples. These both have a 'double word' capacity, that is they can hold a full sixteen bit address. The contents of the program counter are always one in front of the address currently being used. This is in order to allow subroutines to rejoin the program at the right place. When multiple subroutines are used, these addresses are held in a LIFO memory area called the stack. Some processors have a built-in stack which allows only a certain

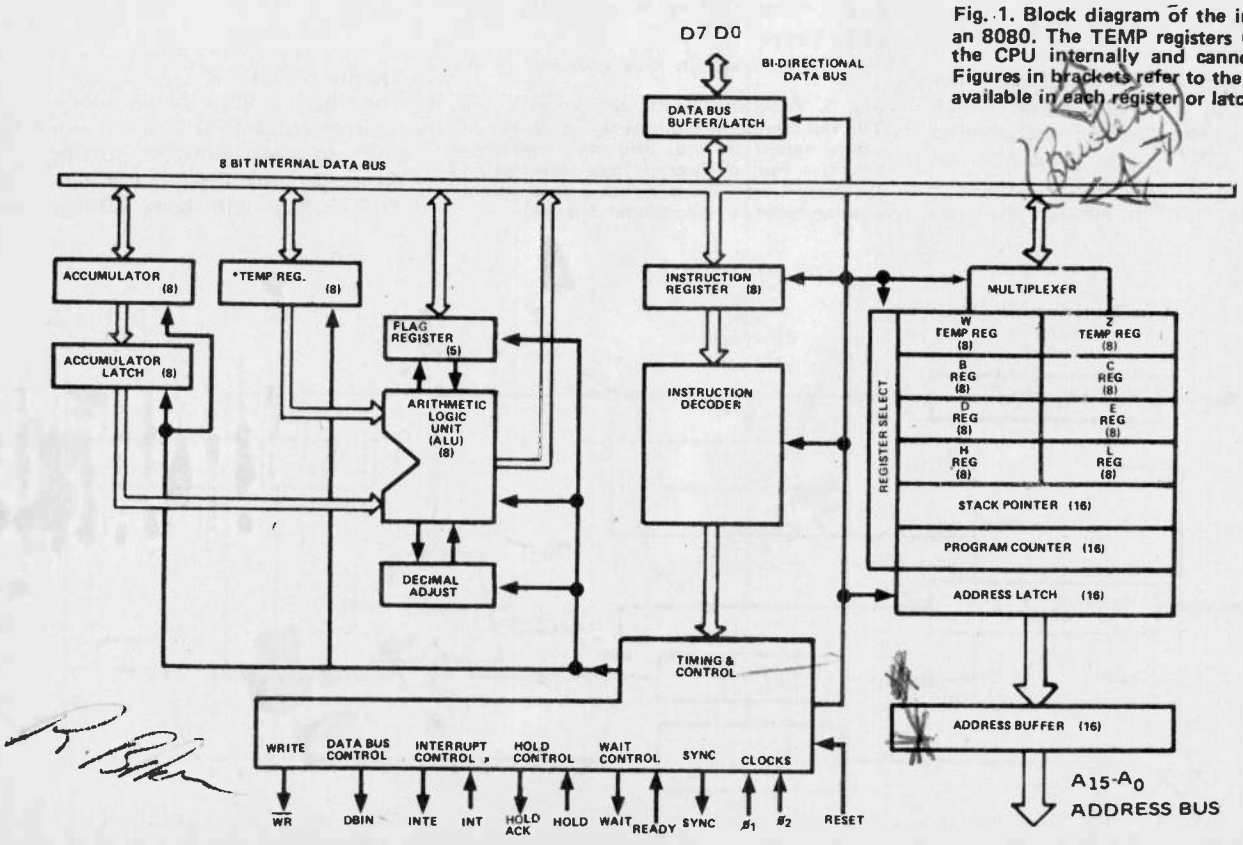

Fig. 1. Block diagram of the internal areas of an 8080. The TEMP registers (*) are used by the CPU internally and cannot be accessed. Figures in brackets refer to the number of bits available in each register or latch.

number of subroutines, whereas others use a dedicated area of memory, which can be, in theory, as large as you like.

All the stored information in memory is, until decoded, garbage. The instruction register performs two tasks in that it not only holds the currently selected address contents but also decodes them to see if they are valid instructions or data. This is usually done by a mask programmed ROM (Read Only Memory) which has all the valid instructions stored in it. The reason for coding the instructions set into a 'microprogram' are twofold. Firstly, it makes the control circuitry much simpler and, secondly, one can, in theory at least, change the instruction set of one's processor. As an example of this there are some 20 extra codes built into the Z80 CPU that are not mentioned in the manuals. Apparently they are not all guaranteed to work on all Z80s. Manufacturers sometimes use these codes to verify the operation of the CPU or memory chips. Usually the codes are not the same from one manufacturer to another. (One person we know found one in the 6800 which he gave the mnemonic EX-CUD, or EXecute, Curl-Up and Die. When executed, the chip would cycle through the memory, dumping some hex code into each location. Upon completion the device then went into a WAIT and would ignore any efforts to reset or reactivate it).

Cycling Around

All the processes of control are under the charge of a central clock which synchronises the various happenings within the CPU. Some processors require a two phase clock, others a single phase, but in almost all cases the clock must be crystal controlled. The reason for the accuracy needed is that, if one is to expand the system further than the basic CPU and its associated support circuitry, the clock must remain stable under variations of temperature and varying loads. Computer buses are fairly capacitive and can, over reasonable transmission distances, turn a nice square wave into a very unpleasant object indeed. The fundamental speed of the CPU is governed by the clock frequency. The original 8080 ran at 1 MHz and will, therefore, process at twice the speed. However, and this is a common misconception, the actual CPU doesn't process at these speeds because of a number of reasons.

The most obvious reason is that the ALU is a serial device, that is it takes one bit at a time rather than processing the entire word. The second reason, which I will elaborate on in a minute, is that one has to perform a number of discrete operations within the chip just to get the information in a place where it can be processed and this takes time. All these operations are performed in cycles, the fundamental unit of time taken to fetch and execute a single instruction. On inspection of a data sheet on your chosen micro you will find this time quoted in terms of the number of clock cycles taken. All other instructions are then specified in the number of cycles that they take.

State Visit

To further explain this concept of instruction cycles let's take a look at the various types. The basic-FETCH cycle, also known as the M1 cycle, is made up of four states. During the first three, the processor fetches the instruction from the memory location indicated by the program counter. The counter is at this point showing the current location and has not been incremented. The fourth cycle is taken up by decoding the instruction. An example of this is the instruction to add the contents of a register to the Accumulator. If we wish to access a memory location rather than a register, we will have to perform a memory read, which requires an extra machine cycle. Say we wish to add the contents of a given memory location to the contents of the Accumulator. The sequence of operations is as follows: the processor extracts the single byte instruction from the memory location given in the program counter; this takes three states. This is decoded and the processor sends, as an address, the contents of its H and L registers. The data word returned during this cycle is held in a temporary register inside the CPU and we have now used six states. The final act of adding the temporary register contents to the Accumulator takes a further state making seven in all, or two cycles. The longest operation of all, in 8080 code, takes 16 states or five machine cycles.

The Ins & Outs

The final section of our look at the internals of a CPU is the connnections you can make with the outside world. Generally, the CPU is housed inside a DIP package with some 40 legs. Under

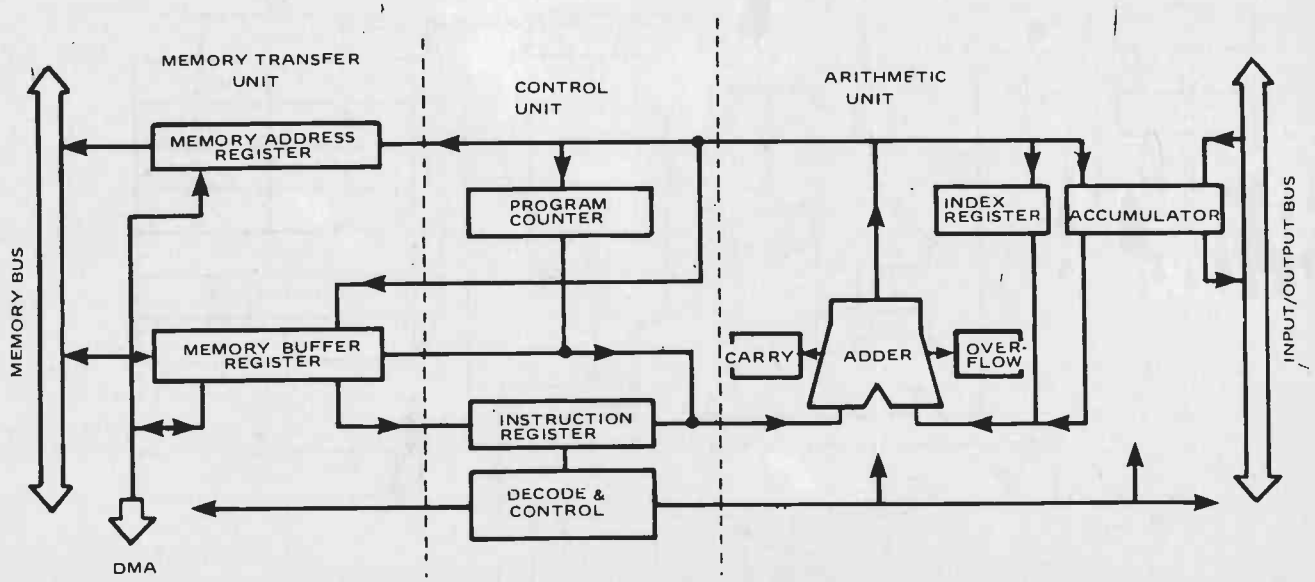

Fig. 2. Functional block diagram of a CPU. This represents the minimal configuration you would expect to find. You could implement this (for fun) in discrete logic elements and see how it worked. It makes a good demonstration piece for schools and colleges.

normal circumstances, assuming the standard eight bit CPU, we will have 16 pins for the address bus, eight pins for the data bus and 16 pins left to play with. Just what you do with them depends on the kind of CPU you have, but let's take a close look at the pins on an 8080.

the synchronisation of external transfers. These include memory and I/O operations and it is the converse of DBIN. There now follows a group of controls, which are concerned with things called interrupts. An interrupt is the computer equivalent of a tap on the shoulder and is used by peripheral devices

Pin designations of the 8080. Developed by Intel, fathers of the micro, it is still regarded as the workhorse of eight bit processing. It also spawned the Z80, probably the most powerful eight bit chip using current technology (although it faces some stiff competition from the Motorola 6809).

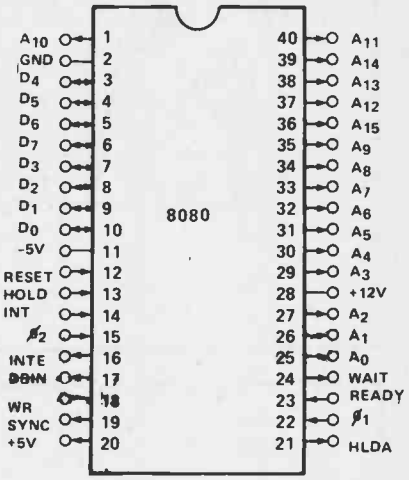

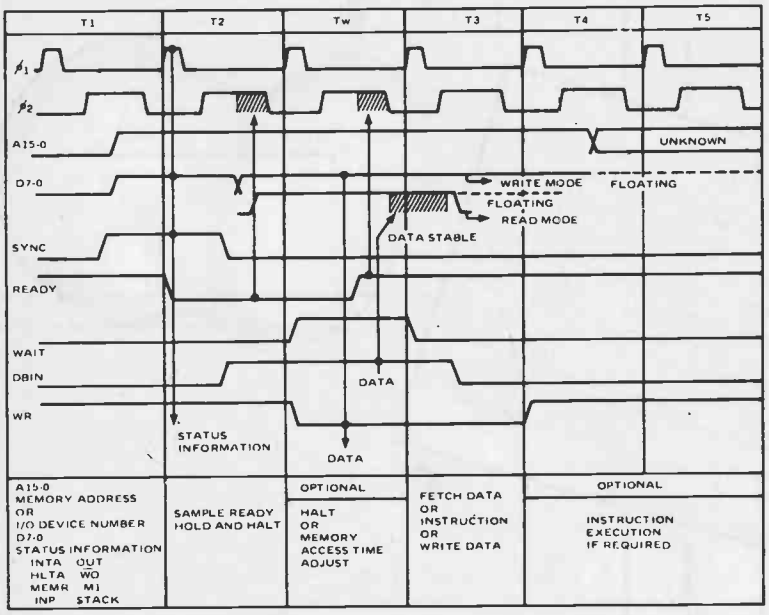

Fig. 3. Timing diagram showing the various states that can make up a machine cycle: The vertical arrowed lines indicate information access states.

Having already mentioned the address and data bus, we only need to say that the data bus is a bi-directional system and is capable of tri-state operation. It can assume a high impedance state, which is neither a logic zero nor one and is used under some special circumstances. Four further legs can be allocated to power; the device needs ±5V, +12V and ground. Yet two more legs can be allocated to the required two phase clock, leaving us ten possible control signals to communicate the state of the device to the outside world. These are SYNC, DBIN, WAIT, HLDA, INTE, READY, HOLD, INT and RESET. Taking these in order, the SYNC indicates the first state of each machine cycle, thus acting as a synchronisation signal, hence the name. The DBIN signal tells the outside world that the CPU can accept data. It should be used to externally enable the transfer. WAIT is an indication that the CPU has entered a WAIT state, triggered by pulling the READY line low before the second state time. This causes extra states to be added to the cycle time for as long as the READY line is held low. The process is often used in situations where the memory or device currently being accessed is slower than the processor.

Our next signal, WR, is provided for to tell the processor that they are ready to be looked at. The INT line must be set high to tap the computer on its shoulder, but this will only work if the INTE line has been enabled previously. Inside the CPU, the interrupt is signalled by a status bit being set and the external device must put its instruction onto the bus in order for any action to be taken. The HOLD line is concerned with direct memory access and as such we shall not dwell on this. The HLDA is merely an indication that the CPU is in a HOLD state. Finally we have the RESET line which, as its name implies, does. The signal will restore the CPU to the first state of a machine cycle and it also clears the program counter. It is essential to start all the power up sequences with this signal (otherwise you never know what you may find yourself doing! It is also worth noting for all those sceptics among you that pressing RESET does *not* destroy all your registers, it merely sets you back to the beginning without destroying your program *unless* the person who programmed the monitor on your system clears the memory as the first operation. Whoever said that programmers were logical anyway? ●

Don't forget to GIVE before you go

Be a RED CROSS Blood Donor

The Fun of Electronics

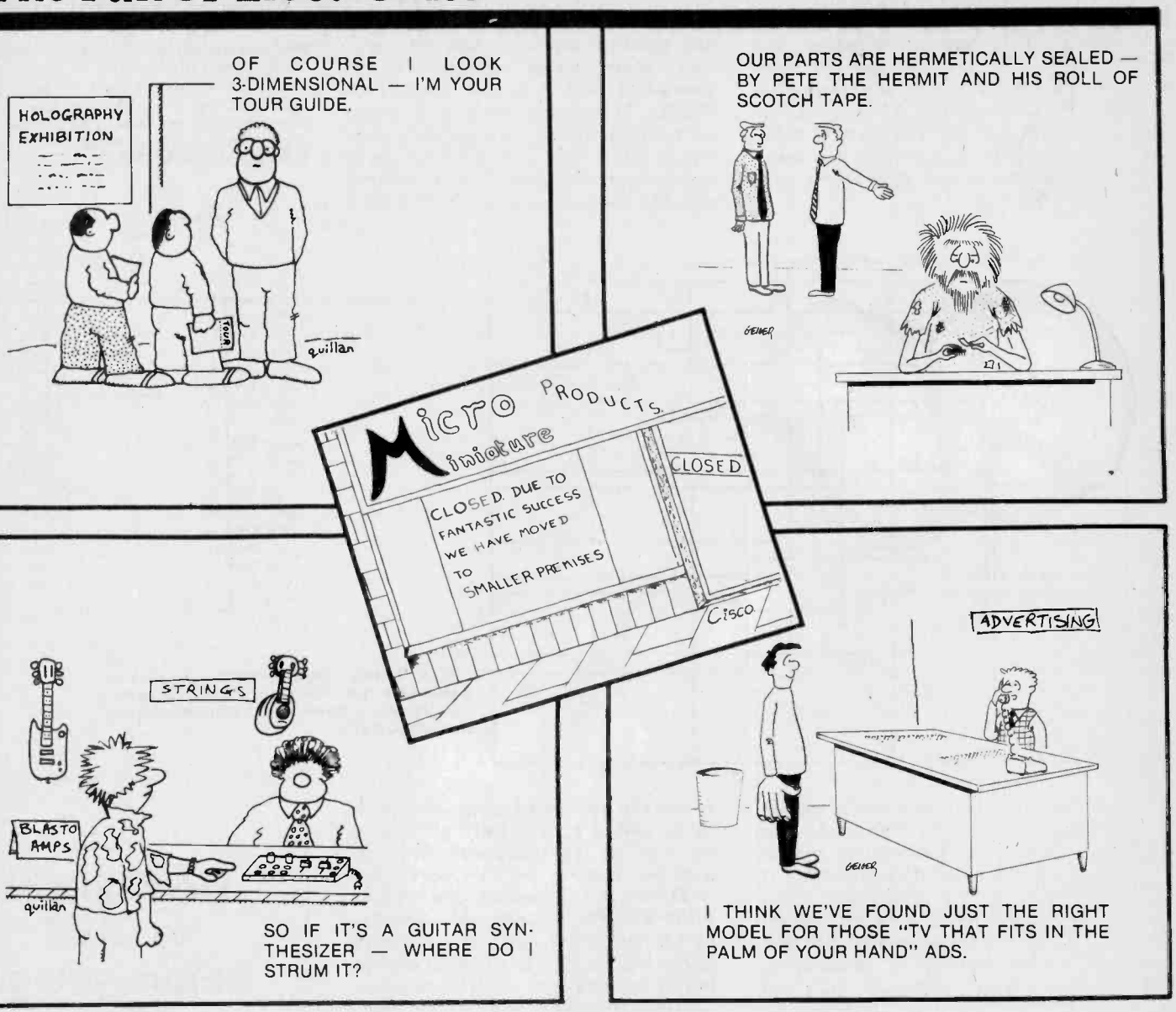

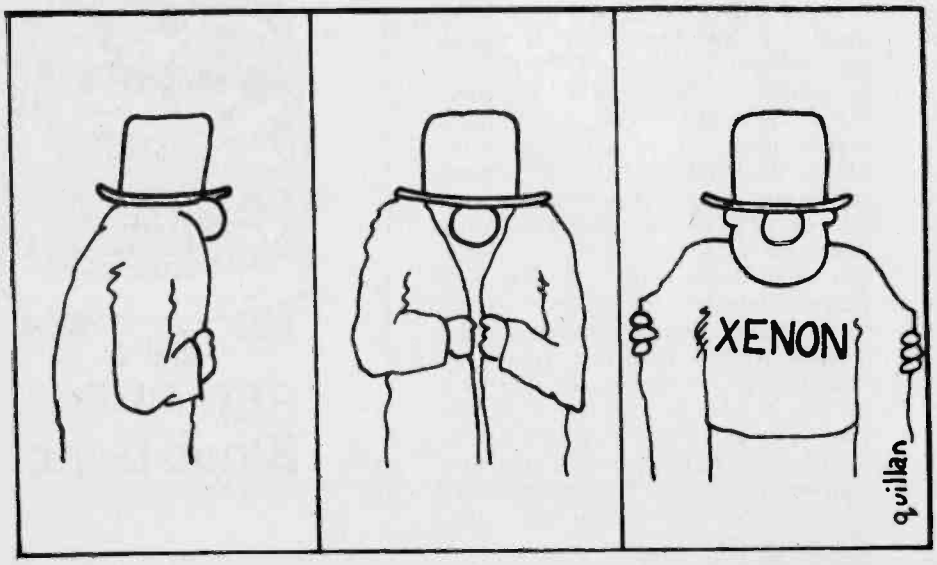

Prov. Code

Employed by

Type of Present Work

Now NRI takes you inside the new TRS-80 Model III microcomputer to train you at home as the new breed of computer specialist!

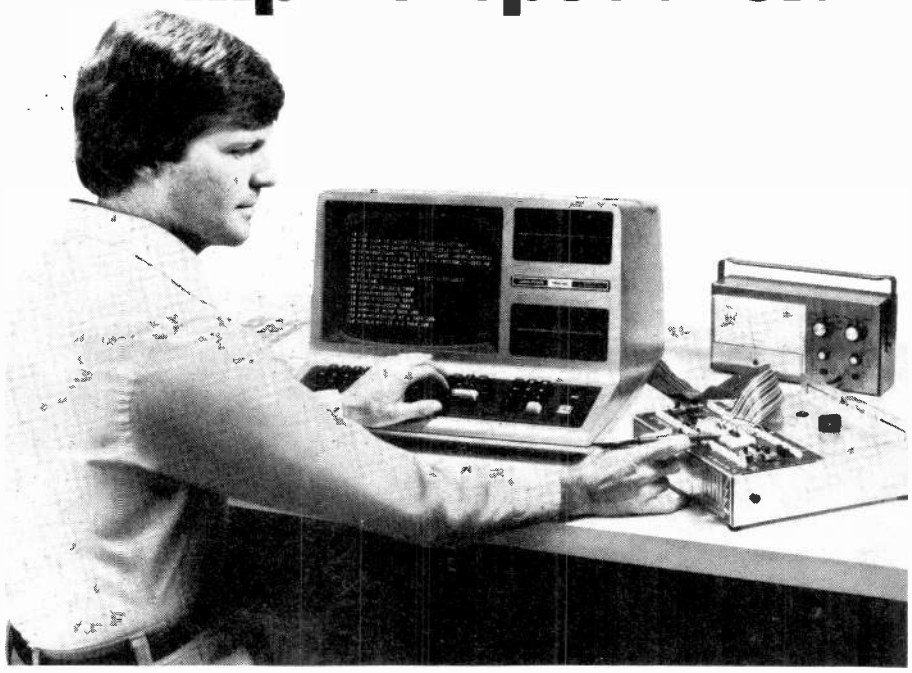

NRI teams up with Radio Shack advanced technology to teach you how to use, program and service state-of-the-art microcomputers...

It's no longer enough to be just a programmer or a technician. With microcomputers moving into the fabric of our lives (over 200,000 of the TRS-80™ alone have been sold), interdisciplinary skills are demanded. And NRI can prepare you with the first course of its kind, covering the complete world of the microcomputer.

Learn At Home in Your Spare Time

With NRI training, the programmer gains practical knowledge of hardware, enabling him to design simpler, more effective programs. And, with advanced programming skills, the technician can test and debug systems quickly and easily.

Training includes new TRS-80 Model III microcomputer, solid state volt-ohm meter, digital frequency counter, and the NRI Discovery Lab with hundreds of tests and experiments.

(TRS-80 is a trademark of the Radio Shack division of Tandy Corp.)

Only NRI gives you both kinds of training with the convenience of home study. No classroom pressures, no night school, no gasoline wasted. You learn at your convenience, at your own pace. Yet you're always backed by the NRI staff and your instructor, answering questions, giving you guidance, and available for special help if you need it.

You Get Your Own Computer to Learn On and Keep

NRI training is hands-on training, with practical experiments and demonstrations as the very foundation of your knowledge. You don't just program your computer, you introduce and correct faults...watch how circuits interact... interface with other systems...gain a real insight into its nature.

You also build test instruments and the NRI Discovery Lab, performing over 60 separate experiments in the process. You learn how your trouble-shooting tools work, and gain greater understanding of the information they give you. Both microcomputer and equipment come as part of your training for you to use and keep.

Send for Free Catalog

Get all the details on this exciting course in NRI's free, 100-page catalog. It shows all equipment, lesson outlines, and facts on other electronics courses such as Complete Communications with CB, TV and Audio, Digital Electronics, and more. Mail the postage-paid card today, and we'll rush your catalog. Keep up with the latest technology as you learn on the latest model of the world's most popular computer. If card has been used, write to:

NRI

NRI Schools
McGraw-Hill Continuing Education Center
330 Progess Avenue
Scarborough, Ontario M1P 2Z5
or telephone 416-293-1911

Oscilloscope Probes-Worldwide

►► 10% off

during July August

10% Discount on all prices shown for quantities of TWO or more probes . . .

TERMS: Until sale ends on August 31-1981 only cheque or money orders will be accepted. Other orders will be sent C.O.D.

BCS ELECTRONICS LIMITED

Instruments For Industry and Service

980 ALNESS STREET UNIT 35
DOWNSVIEW, ONTARIO M3J 2S2

X10 Oscilloscope Probes

P100

Specification

Bandwidth	100 MHz
Rise Time	3.5 nanoseconds
Input Resistance	10 MΩ when used with Oscilloscopes with 1MΩ input (Probe resistance 9MΩ ± 1%)
Input Capacity	9.5 pF when used with oscilloscopes which have 30 pF input capacity
Compensation Range	10-60 pF
Working Voltage	600 Volts D.C. (including Pk A.C.)
Cable Length	1.5 Metres

$35.85

2P150

Specification

Bandwidth	D.C. to 150 MHz
Risetime	2.3 nanoseconds
Input Resistance	10MΩ when used with oscilloscopes with a 1MΩ input (Probe resistance 9MΩ ± 1%)
Input Capacity	11.0 pF when used with oscilloscopes which have 30pF input capacity
Compensation Range	10-60 pF
Working Voltage	600 Volts D.C. (including Pk A.C.)
Cable Length	2 Metres

$48.10

2P100

Specification

Bandwidth	D.C. to 100 MHz
Risetime	3.5 nanoseconds
Input Resistance	10MΩ when used with oscilloscopes with 1MΩ input (Probe resistance 9MΩ ± 1%)
Input Capacity	13.5 pF when used with oscilloscopes which have 30 pF input capacity
Compensation Range	10-60 pF
Working Voltage	600 Volts D.C. (including Pk A.C.)
Cable Length	2 Metres

$48.10

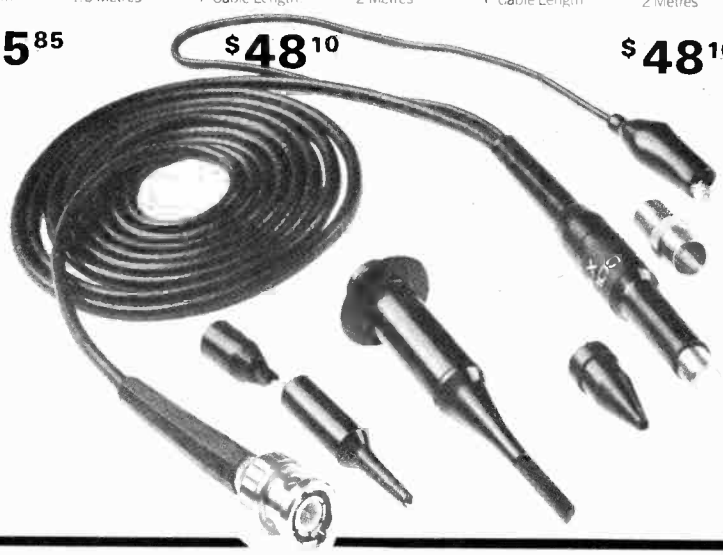

SP100 Oscilloscope Probe

$51.20

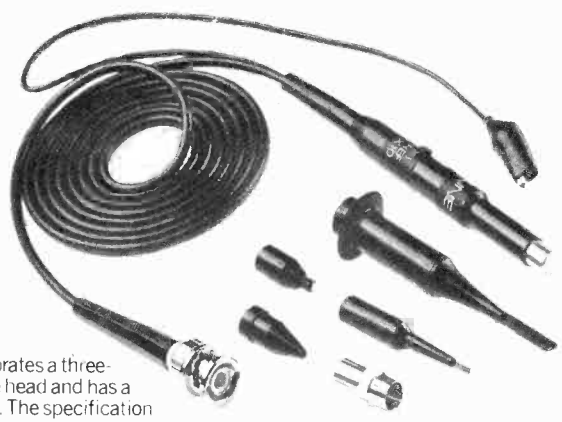

This passive probe incorporates a three-position slide switch in the head and has a cable length of 1.5 metres. The specification is as follows.

Position x 1

Bandwidth:	D.C. to 10MHz
Input Resistance:	1MΩ (oscilloscope input)
Input Capacity:	40 pF. Plus oscilloscope capacity
Working Voltage:	600 Volts D.C. (including Peak A.C.)
Cable Length:	1.5 Metres

Position Ref.

Probe tip grounded via 9MΩ resistor, oscilloscope input grounded

Position x 10

Bandwidth:	D.C. to 100 MHz
Risetime:	3.5 nanoseconds
Input Resistance:	10MΩ when used with oscilloscopes which have 1MΩ input. (Probe resistance 9MΩ ± 1%)
Input Capacity:	11.5 pF when used with oscilloscopes which have a 30pF input capacity.
Compensation Range:	10-60 pF
Working Voltage:	600 Volts D.C. (including Peak A.C.)

$26.60

1P20 X1 Oscilloscope Probe

Specification

Bandwidth:	D.C. to 20 MHz
Input Resistance:	1MΩ (oscilloscope input)
Input Capacity:	47 pF. Plus oscilloscope input
Working Voltage:	600 Volts D.C. (including Peak A.C.)
Cable Length:	1.5 Metres

Circle No. 3 on Reader Service Card.

HOLOGRAMS

Holography is the art of making three dimensional photographs, as Anne Sullivan explains. If you think your collection of slides takes up a lot of space now. . .

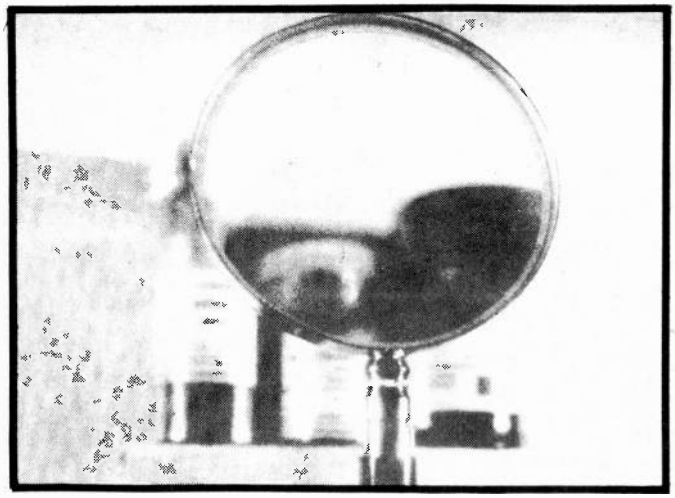

At first not a very impressive shot (above); a magnifying glass (in focus) with out -of-focus bottles in the background but these two photographs together demonstrate well the wonder of holograms for if we refocus the bottles appear sharp. We can also move to the left which would bring the bottles on the right into view — and still in focus.

Holography records light waves reflected from an object and reconstructs them to produce a three-dimensional image. Holograms can only be recorded using a strong coherent light, so, to explain holography it is important to understand the nature of light itself. All light travels in waves. White light is composed of all the colours of the spectrum, each colour having its own wavelength. Because white light is composed of many different wavelengths and phase orientations travelling together, it is known as incoherent light. Coherent light is composed of waves of identical length and frequency travelling in phase, such as that produced by a laser.

Mirror, Mirror. . . .

All objects reflect light, the amount varying in intensity according to the shape and nature of the object. A hologram is recorded when wavelengths of coherent light that are in phase overlap to produce a wavefront known as an interference pattern. The interference pattern, which records the dimensions and depth of the object, is recorded on a photographic plate and when the interference pattern is reconstructed, we see what appears to be a three-dimensional image of the original object — a hologram.

Holography was discovered by Dennis Gabor in 1948 at the British Laboratories in Rugby. His early holograms confirmed this theory, but the images were dim and blurred. Development was hindered by a lack of a sufficiently strong source of coherent light and photographic emulsions of a high enough quality. In 1960 with the invention of the laser, a strong source of coherent light became available and in 1964 two American scientists, Emmett Leith and Juris Upatnicks were able to further the pioneering work done by Gabor. Leith and Upatnicks produced the first bright holograms and the system they developed is known as 'off axis transmission holography'.

Object Lesson

To make a hologram the light from a laser is split into two beams using a beam splitter. One beam is directed onto the object to be recorded (the reference beam). The intensity of the lightwaves reflecting from all the points of the object combine with waves of the reference beam to produce an interference wavefront in the emulsion. The photographic plate (which is an extremely fine grain silver halide emulsion) is then developed and fixed in a similiar way to conventional photographic film. The developed plate which contains the interference pattern is a hologram.

Image Making

To reconstruct or view the hologram, the reference beam from the laser is directed at the holographic plate at the same angle as in the recording stage. When it emerges it recreates the light waves from the original object and reconstructs a three-dimensional object behind the holographic plate. this type of hologram where the image is reconstructed behind the plate is known as a *'virtual image hologram'*.

Reconstruction of a hologram where the image appears in front of the plate (a *'real image hologram'*) is more complicated. If the procedure is reversed and the holographic plate is lit from behind, the image that is reconstructed in front of the plate will be back to front and with reverse perspective; that is, the objects in the background will appear larger than those in the foreground. This inside-out image is known as pseudoscopic.

In order to create a real image hologram a second hologram is made of the pseudoscopic image. When the second generation hologram is reconstructed, the image appears in front of the plate the correct way round ie orthoscopic, the image having been reversed twice.

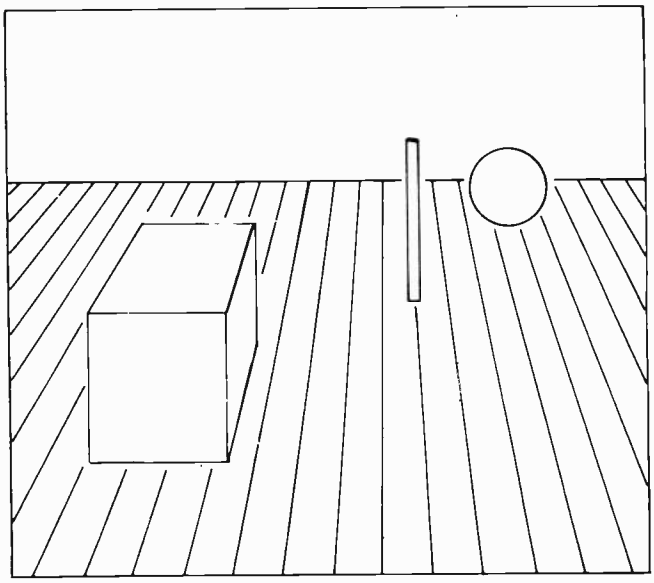

Two dimensional pictures such as this do not charge with different viewing angles. With a hologram the sphere would move behind the pole, and the cube could obscure the pole if viewing angle was changed, by moving your head.

Another type of hologram was developed in the Soviet Union in the early sixties by Y.N. Denisyuk which eliminated the need for a laser to reconstruct the image and so helped to bring holography out of the laboratory and make it more accessible to the public. This type of hologram is known as *'white light reflection hologram'* and, although a laser is required to make the hologram, the image can be reconstructed using a white light source.

Daylight 3-D

In white light reflection holography, Denisyuk also eliminated the need for a beam splitter. A beam of coherent light is passed through the holographic plate and acts as both the object and reference beam. It illuminates the object to be recorded and is then reflected back through the holographic plate. The emulsion records the interference between the beam and the reflection from the object. The hologram is viewed by directing white light onto the holographic plate. The plate acts as a filter and selects only the coherent light to reconstruct the hologram.

Another method of making white light reflection holograms uses the pseudoscopic image of a laser transmission hologram (in a similar way to making a real image transmission) but with the reference beam of the second hologram coming from the opposite side of the plate.

In 1969 Dr. Stephen Benton, working for the Polaroid Corporation developed a system that enabled a *'real image hologram'* to be viewed in white light. Making a so-called 'white light 'rainbow' transmission hologram' is a more complicated process, but it basically involves two stages. Initially, a transmission hologram is made. Then a second hologram is made in the same way that a *'real image hologram'* would be recorded except that just a horizontal slit (3-5mm) of the master is illuminated. The slit is projected infront of the hologram and the white light passing through it acts as a filter. The white light passing through the slit is diffracted and produces a rainbow effect, so, depending on the viewing angle the holographic image appears in all colours of the spectrum. Dr. Benton has since modified his process and is now able to produce achromatic (black & white) images. Another type of reflection hologram known as a *'dichromate gelatin hologram'* was developed in the USA in the sixties. These holograms are made using ammonium dichromate instead of a silver halide plate. This method produces holograms with a very bright image, but limited depth. Its major application so far has been in the production of holograms in the forms of pendants.

Life Class

In all the methods of holography previously described the subject matter has to be an inanimate object, as any movement, even breathing, would disturb the interference pattern of the wavelengths and no image would result. However, animate objects can be recorded holographically using a pulsed laser. A pulsed laser emits intense flashes of coherent light, rather like a flashgun, which freeze the movement of the subject long enough to record the image. Using a pulsed laser it has even been possible to make a hologram of a bullet in flight. Pulsed lasers can also be used to make holographic portraits of people, but when making a hologram of a person a large sheet of frosted glass has to be used to diffuse the light from the laser for safety.

Another type of hologram, an *'integral hologram'* incorporates movement. Integral holograms are not

Fig. 1. The single beam from a common laser is split in two. One beam (reference) is taken directly to the photographic plate. The other gets there via the object The two beams produce an interference pattern in the emulsion.

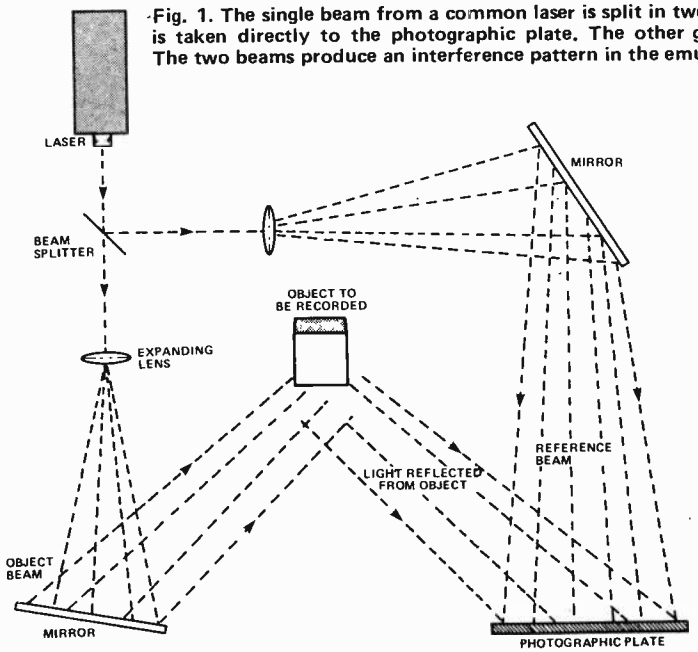

strictly holograms, but a marriage of cinematography and holography as the subject matter is not recorded with a laser, but with ordinary 16 or 35mm black and white film. An integral hologram is basically a series of holograms joined together to create movement. The process was developed by Lloyd Cross of the Multiplex Co. in 1974. An integral (or multiplex) hologram is also made in two stages. First the subjects is filmed on a turntable which moves at a fixed speed. Any movement to be recorded has to be slow and smooth or the resulting hologram will have blurred or jerky movement. The black and white film is then scanned by a laser and each frame is made into a vertical strip hologram using a technique similar to the 'Rainbow' method. The resulting series of vertical strip holograms are contained on a flexible photographic sheet. To reconstruct the holograms the film is usually placed in a 120° cylindrical container (360° holograms can also be made). The container is illuminated from below by an ordinary incandescent light source. Integral holograms are popular as they eliminate some of the problem of the other types of holography, in that they are not confined to same size reproduction, allow a certain degree of movement, can be copied relatively cheaply and they can be reconstructed easily using an ordinary light source.

Applications

The applications of holography are numerous — among them, storing digital information, recording works of art and preserving them for posterity, as point of sale displays for advertising, in education to demonstrate complex forms such as molecular structures, as a completely new medium for artists to work in and as an art form in the home. ●

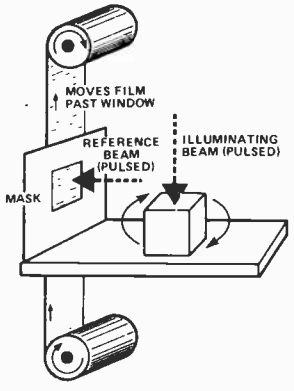

Fig. 6 One method of producing a holographic film of a moving object. A pulsed beam illuminates the spinning cube.

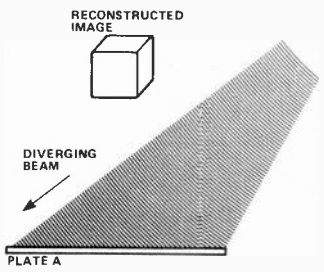

Fig. 2 Recovering a holographic image. A beam of light (white or laser, depending on the method of recording used) is directed at the photographic plate at the same angle as that of the reference beam during recording.

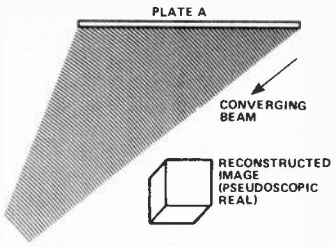

Fig. 3 The image can be made to appear in front of the plate by illuminating it from the front. However, the image is reversed in all respects. Objects in the background appear to be larger than those in the foreground.

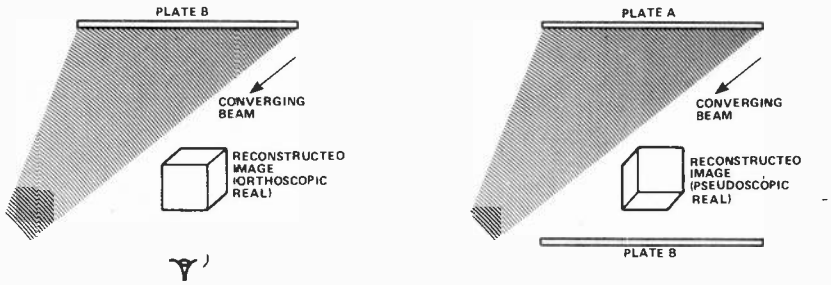

Fig. 4 To return the perspective to normal, a second hologram must be made from the first.

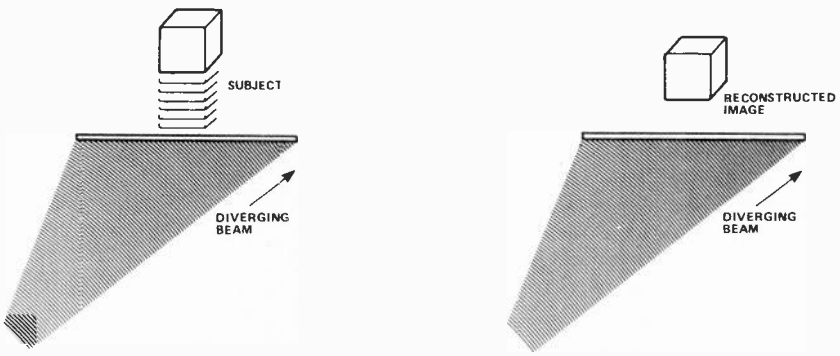

Fig. 5. To make a white light reflection hologram, the recording reference beam and object to be recorded are on opposite sides of the plate. The back of the plate is often coated with black to give a dark viewing background during reconstruction.

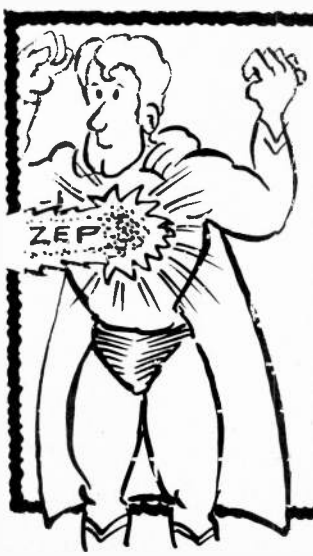

ABSORBS ZEPTON PARTICLES!

ETI T-Shirts are specially designed to absorb 93.6% of all zepton particles encountered by the wearer. They also stop venusian death rays, deflect Meso-synergenic plasma beams, repulse andorrian disruptor bolts and produce a noticeable up-spectrum shift of the cerebro-spinal infra-defusion phasers currently popular in the lesser mangellic cloud. If you purchase an ETI T-shirt ($5.50 for large medium or small) and are subsequently disintegrated, evaporated, phased, fryed or blown into the fourth dimension by one of these perils, your money will be cheerfully refunded. They are available from **ETI T-SHIRTS, UNIT 6, 25 OVERLEA BLVD, TORONTO, ONTARIO. ONTARIO RESIDENTS PLEASE ADD PST.**

ORION
Electronic Supplies Inc.
ELECTRONIC DISTRIBUTOR
INDUSTRIAL — EDUCATIONAL — COMMERCIAL — HOBBYIST

START WITH ORION FOR A NEW ERA IN THE WORLD OF ELECTRONICS
We have the most complete selection of electronic components.
Full line of TTL, CMOS, Linear, ICs, Computer Interface, Support Chips and CPUs.

INTERACT COMPUTER 16K LEVEL II

Just $595.

Write for our flyer on Interact Computer ☐

A powerful microcomputer with a full standard 53 key typewriter style keyboard and built-in cassette recorder for use in entering and storing programs. Utilizing the versatile Intel 8080A microprocessor, the Interact computer has 16K of RAM and 2K of ROM at its disposal. Output is in color on your own TV screen. Sound is also generated through your TV set and can consist of exhilarating computer beeps or two full octaves of music. This is truly a powerful computer capable of developing and handling a variety of programs, and with available software provides true educational stimulus (examples: Star Track, Chess, Concentration, etc.). The Interact computer offers the ideal opportunity to learn BASIC, the most popular computer language for small business and hobbyists, and with the use of the 84 page manual, you learn at your own pace.

INSTALLATION: Attach to antenna terminals of your color TV set and plug into 120 VAC wall outlet. Computer includes built-in RF modulator, FCC approved and UL and CSA listed.

PROGRAMING: Most Micro-computers start you off with an abbreviated 4K BASIC, and then later you have to relearn the more powerful language. Since this computer has 16K of RAM, we start you with Level II Microsoft 4.7 BASIC. BASIC is the most popular Micro-computer language using commands that are words we are ordinarily used to, such as, PRINT, NEW, GOTO (For go to), END, COLOR, JOY, INPUT, etc. To help you learn programing we have included an 84 page instruction manual, plus a 20 page book of program examples.

Educational and Entertaining

RCA COSMAC VIP

Authorized distributor for RCA, COSMAC VIP

New! VP 111 Microcomputer $139.50
Assembled* and tested.

Features
- RCA 1802 Microprocessor
- 1K Bytes static RAM
Expandable on-board to 4K
Expandable to 32K Bytes total
- 512 Byte ROM operating system
- CHIP-8 interpretive language or machine language programmable
- Hexidecimal keypad
- Audio tone generator
- Single 5-volt operation
- Video output to monitor or modulator
- Cassette interface—100 Bytes/sec
- Instruction Manual with 5 video game listings, schematics, CHIP-8, much more

Ideal for low-cost control applications
Expandable to full VIP capability with VP-114 Kit

*User need only connect cables (included), a 5-volt power supply, and speaker

The ZX80 Personal Computer

$299.50

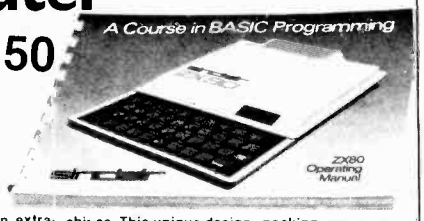

The Sinclair ZX80 is an extraordinary personal computer. Compact and briefcase-sized, it weighs just 12 ounces. Yet in performance it matches and surpasses systems many times its size and price.

The ZX80 is an advanced example of microelectronics design. Inside, it has one-tenth the number of parts of existing comparable machines. This unique design - packing the system onto fewer, more advanced LSI chips - gives the ZX80 its remarkably low price.

Along with a complete 128-page course in BASIC programming, the ZX80 comes with all the necessary cords for connecting to standard color or B/W televisions and cassette recorders.

Microprocessor/Memory
Z80A 3.25MHz clock
ROM: 4K bytes containing BASIC
RAM: 1K bytes internal, externally expandable to 16K bytes.

Keyboard
40 key touch-sensitive membrain with keyword entry gives an equivalent of 62 keys. After entering the statement number, the next key you touch enters the keyword printed above it automatically.

SINCLAIR ADVANCED DESIGN FEATURES
* 4K Integer Basic.
* 1 stroke entry for key words.
* Automatic error detection.
* Text editing capability.
* Machine code programming too.
* 26 string variables, any length.
* Random function, built-in.
* 1K RAM matches others 4K.

Price includes TV and cassette connectors, AC Adapter, and 128 page manual.

☐ Please send more information on Sinclair Computers

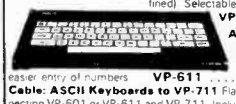

ASCII Keyboard Fully encoded, 128-character ASCII alphanumeric keyboard; 58 light touch keys (2 user defined). Selectable "Upper-Case-Only". **VP-601 ..... $109.75**

ASCII/Numeric Keyboard ASCII Keyboard identical to VP-601 plus 16 key numeric entry keyboard for easier entry of numbers. **VP-611 ..... $139.75**

Cable: ASCII Keyboards to VP-711 Flat ribbon cable, 24 in. length, for connecting VP-601 or VP-611 and VP-711. Includes matching connector on both ends. **VP-620 ..... $27.50**

Cable: ASCII Keyboards Flat ribbon cable, 36 in. length with mating connector for VP-601 or VP-611 Keyboards. Other end is unterminated. **VP-623 ..... $27.50**

Orion Electronic Supplies Inc.
40 Lancaster Street West
Kitchener, Ontario N2H 4S9
(519) 576-9902

Master Charge & Visa, COD, Cheque, Money Orders accepted. CODs, shipping & insurance extra. Write for our FREE catalogue!

Circle No. 6 on Reader Service Card.

FALCON

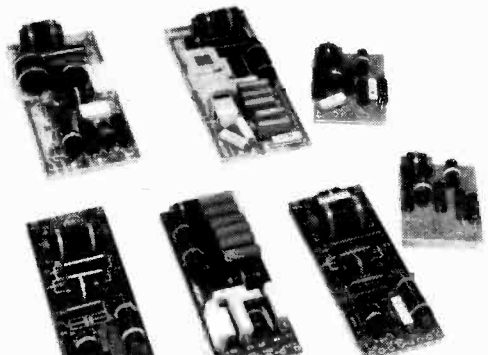

CROSSOVER NETWORKS

WE ARE PLEASED TO OFFER FALCON ELECTRONICS' RANGE OF PRECISION CROSSOVER NETWORKS.
Made with high-tolerance components of large power capacity, each type is tailored & fine-tuned for a specific set of drivers. We supply networks, with project plans, for the popular **Audax** combinations as well as **Kef, Coles, Peerless** and others.

WE ALSO STOCK: KITS BY COLES, CRIMSON, KEF; PLUS: ANGSTROM, A&R CAMBRIDGE, ADC, AKG, AIWA, AUDIO DESIGN, BLAUPUNKT, BRYSTON, DYNAVECTOR, ELESON, HADCOCK, HARMAN KARDON, LINN, MERIDIAN, MICRO SEIKI, MISSION, NAIM, ORACLE, PSB, REGA, ROGERS, SAEC SENNHEISER, SPENDOR, SUPEX, SYRINX, TANDBERG

AUDAX

THE COMPLETE RANGE OF BEXTRENE WOOFERS AND SOFT DOME TWEETERS IS NOW AVAILABLE FROM US.
You've seen these drivers used in some top-rated systems from **Angstom, Meridian, Plasmatronics, Spendor** and many others, so you probably think they're expensive. You'll be pleasantly surprised!

In addition, we stock **Audax'** top-rated automotive speakers, and the superb **Professional Series** for PA and sound reinforcement.
In fact, there's an **Audax** unit for **any** requirement — just ask us!
We answer all correspondence individually, and you're welcome to phone or drop in to discuss your needs.

RING

MAIL ORDERS WELCOME —
WE SHIP ANYWHERE IN CANADA.

553 QUEEN ST. W.
TORONTO M5V 2B6 364-5058 SALES 364-5708 SERVICE

Circle No. 17 on Reader Service Card.

THE WEIN BRIDGE OSCILLATOR

Probably the most popular type of low frequency sine wave oscillator as it is superior in virtually all respects to phase-shift types. Unfortunately it does not seem to be all that well understood. This article sheds some light on this most useful circuit.

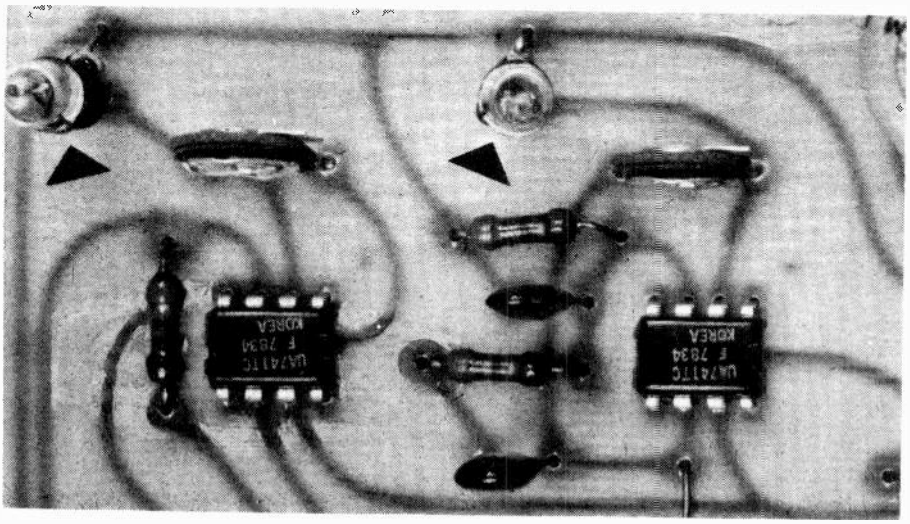

Twin Wein Bridge oscillator using lamps for feedback stabilisation.

MOST STUDENTS of electronics – that includes hobbyists, you learn from your hobby don't you? – would be familiar with the "Wheatstone Bridge"; that often-handy technique for measuring unknown values of resistance. The Wein Bridge is an outgrowth of the Wheatstone Bridge. The basic circuit is shown in Figure 1.

This circuit has some unique properties. The networks R1-C1 and R2-C2 form a potential divider between points A and B. Both networks have an impedance which decreases with frequency. At one frequency, and one frequency *only* (depending on the values of R1-C1 and R2-C2), the bridge will be balanced. That is, if a sinewave voltage is applied between A and B no voltage will appear across C and D. Another interesting, and useful property of this bridge is that, at the balance frequency, the phase of the voltage across C and B will be *exactly* the same as that across A and B. The same will be true for harmonics of the balance frequency, *but,* the impedances of R1-C1 and R2-C2 will not be the same as at the balance frequency and the bridge will be unbalanced.

Well, how are these properties of the Wein Bridge used in an oscillator? The basic circuit of a Wein Bridge oscillator is shown in Figure 2. The component numbering of the Rs and Cs is the same as in Figure 1. We are assuming that the amplifier has good common-mode rejection, an infinite input impedance and zero output impedance. Fortunately, an op-amp is a reasonable approximation to this and the circuit as shown will work well with a common-or-garden 741 at frequencies up to 10kHz.

The Wein Bridge components are connected such that positive and negative feedback is applied around the op-amp. This should be readily apparent from the way Figure 2 is drawn. The negative feedback is derived from the resistive potential divider R3 and R4. Positive feedback is provided by the potential divider R1-C1 and R2-C2. The amount of positive feedback through R1-C1 will *increase* with frequency as this network has a *decreasing* impedance as frequency increases. The parallel RC network formed by R2-C2 also has *decreasing* impedance with *increasing* frequency, tending to shunt the amount of applied positive feedback (via R1-C1) to ground. At the balance frequency the applied positive feedback will be a maximum, falling at frequencies above and below the balance frequency. However, if the bridge is balanced, the positive feedback and the negative feedback will be equal . . and the circuit will not oscillate. *But,* if the amount of negative feedback provided by R3-R4 is chosen to be fractionally less than the

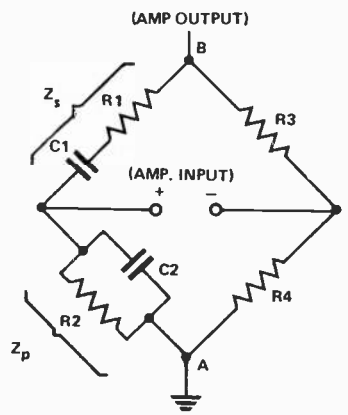

Figure 1. Basic circuit of the Wein Bridge.

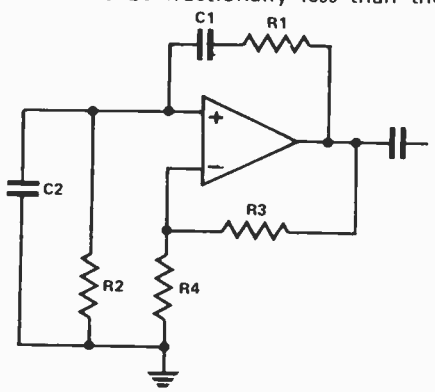

Figure 2. Basic Wein Bridge oscillator circuit.

positive feedback at the balance frequency, the circuit will oscillate. Since negative feedback predominates *at all other frequencies,* and the bridge remains unbalanced, harmonics of the balance (or resonant) frequency are suppressed and the waveform produced will be a sine wave of great purity.

In practise it is necessary to include some means of sensing the amount of negative feedback so that the amplifier gain can be held at the precise amount necessary to ensure oscillation. If the amount of negative feedback is too little, the waveform will be distorted. If too much, oscillation will not occur. Secondly, if the gain varies (for whatever reason) the feedback needs to be stabilised to prevent distortion and level variations.

The simplest way of doing this is to incorporate a thermistor or tungsten filament lamp in the negative feedback potential divider. If the latter is used for this purpose — and common lights bulbs used for bezel lamps have tungsten filaments — it would replace R4 so that gain increases of the amplifier stage cause increased current in the lamp. This, in turn, would cause the temperature of the filament to rise, increasing its resistance, thus increasing the amount of negative feedback. The use of these temperature variable devices sets a limit on the lowest frequency at which the circuit can be used. When the period of oscillation is comparable to the thermal time constant of the particular light bulb or thermistor, the change in resistance over each cycle will bring about gain variations which result in distortion of the output waveform. Also, these devices have a "settling time" that prohibits the frequency from being changed quickly in a variable oscillator using this circuit.

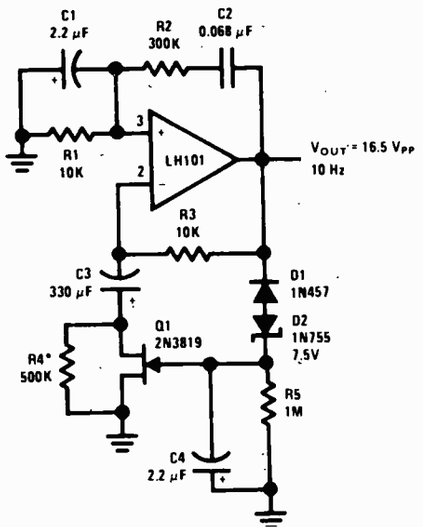

Figure 4. Example of a practical Wein Bridge oscillator with a FET in the feedback (courtesy National Semiconductors).

The solution to these problems entails using a FET as part of the feedback element. The FET becomes part of R4 — as shown in Figure 3 — driven by an RC network between the op-amp output and the gate. In this way, the 'averaging time' of the circuit can be tailored to suit the job required. An example of a practical circuit is given in Figure 4.

A lot of the advantages, and the unique properties of the circuit, become apparent from a look at the mathematics involved; it's quite straightforward really.

The impedance of C1, at a certain frequency 'f', is given by:

$$Z_{C1} = \frac{1}{j\omega C}$$

Where: Z_{C1} = impedance of C1

$$= 2\pi f$$

$$j = \sqrt{-1}$$

So the total impedance Z_s, of the series network R1-C1 is given by:

$$Z_s = R1 + \frac{1}{j\omega C}$$

Since the impedance of capacitor C2 is also given by:

$$Z_{C1} = \frac{1}{j\omega C}$$

Where: Z_{C2} = impedance of C2

$$\omega = 2\pi f$$

$$j = \sqrt{-1}$$

and C2 is in parallel with R2, the total impedance of the parallel network R2-C2 (Z_p) is given by:

$$\frac{1}{Z_p} = \frac{1}{R_2} + \frac{1}{\frac{1}{j\omega C}}$$

therefore: $\frac{1}{Z_p} = \frac{1}{R_2} + j\omega C$

Oscillation will occur when:

$$\frac{R3}{R4} = \frac{Z_s}{Z_p}$$

since it is this condition which will result in unity gain.

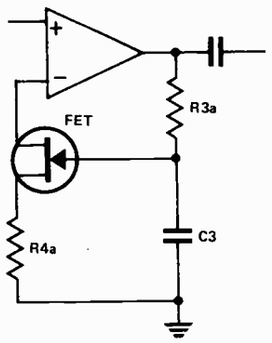

Figure 3. Feedback stabilisation using a FET.

If we let R3 = 2 X R4, and substitute this in the equations for Z_s and Z_p, this equation becomes:

$$\frac{2R4}{\frac{1}{R2} + j\omega C} = R4\left(R1 + \frac{1}{j\omega C}\right)$$

and this simplifies to: $\omega^2 = \frac{1}{R1\ R2\ C1\ C2}$

since $\omega = 2\pi f$,

then $2\pi f = \frac{1}{\sqrt{R1\ R2\ C1\ C2}}$

and $f = \frac{1}{2\pi\sqrt{R1\ R2\ C1\ C2}}$

The major advantage of the Wein Bridge oscillator is its inherent stability and predictable frequency output. In other low frequency oscillators employing RC networks in the feedback, the frequency of oscillation is *directly* proportional to the values of the components in the network. In the Wein Bridge, you can see from the last equation that the frequency of oscillation is proportional to the *square root* of the component values in the network. The ease with which amplitude levelling and level stability can be achieved by using simple thermal devices in the negative feedback is another advantage. Thirdly, the low distortion possible with this circuit contributes greatly to its popularity.

On the other hand, to vary the frequency, two components have to be varied simultaneously — either C1/C2 or R1/R2. The fact that the one of these is wholly above ground' complicates things — but it's not an insoluble problem as there are many Wein Bridge oscillators around! ●

Avantek

Lower cost 120° K TVRO LNA. Model AWC – 4215.

The Model AWC-4215 is specified for lower cost manufacture, yet offers the same top performance as the thousands operating in cable systems worldwide.

Miniature transistor amplifier modules.

The GPD-200, -400, -1000 Series are in T0-12 packages, ready to operate in a microstrip circuit upon application of DC voltage. Bandwidths are 5 to 200 MHz., 5 to 400 MHz. and 5 to 1000 MHz.

Varactor Tuned Oscillators.

The VT0-8000 Series covers 400 MHz. to 9600 MHz. in ten models. Thin film construction in T0-8 package.

Avantek is a leader in wide-band low-noise solid state amplifiers covering the frequency range from a few hertz to 18 GHz.

Sheppard Agencies Limited
P.O. Box 8, Georgetown, Ontario L7G 4T1
Telephone: (416) 877-9846 Telex: 06-97500

Circle No. 1 on Reader Service Card.

LOWEST PRICE FIRST QUALITY

7400	30	74164	99	74LS174	89
7401	30	74174	88	74LS175	89
7402	30	74175	85	74LS191	1.04
7403	30	74176	99	74LS192	1.03
7404	32	74177	99	74LS193	1.03
7405	32	74180	96	74LS194	1.50
7406	45	74192	96	74LS240	2.50
7408	32	74193	98	74LS241	2.50
7410	30	74194	1.05	74LS244	2.50
7411	40	74195	85	74LS251	1.04
7413	48	74196	95	74LS257	80
7414	75	74365	75	74LS258	80
7416	45	74367	75	74LS259	1.85
7417	40	74LS00	28	74LS266	.54
7420	32	74LS01	29	74LS279	62
7427	40	74LS02	29	74LS290	1.12
7430	30	74LS03	29	74LS365	79
7432	40	74LS04	32	74LS367	85
7437	40	74LS05	32	74LS368	85
7440	30	74LS08	31	74LS373	1.82
7441	1.20	74LS09	31	74LS374	1.83
7442	65	74LS10	29	4000	40
7445	1.10	74LS11	32	4001	32
7446	1.05	74LS12	32	4002	32
7447	90	74LS13	55	4006	1.38
7448	95	74LS14	1.10	4007	40
7450	30	74LS20	29	4008	1.25
7451	32	74LS21	29	4010	55
7472	44	74LS27	35	4011	32
7473	44	74LS30	29	4012	32
7474	44	74LS32	33	4013	58
7475	56	74LS37	36	4014	1.05
7476	44	74LS38	36	4015	1.05
7483	90	74LS42	80	4016	54
7485	95	74LS51	29	4017	1.05
7486	44	74LS73	41	4018	1.05
7489	2.95	74LS74	51	4019	55
7490	58	74LS75	56	4020	1.19
7492	56	74LS83	98	4022	1.09
7493	56	74LS85	1.07	4023	32
7495	76	74LS86	48	4024	89
7496	76	74LS90	80	4025	33
74107	49	74LS92	80	4027	70
74109	50	74LS109	45	4028	.97
74121	52	74LS123	90	4029	1.15
74122	59	74LS125	69	4030	48
74123	75	74LS126	63	4034	2.90
74125	80	74LS136	55	4035	1.38
74132	80	74LS138	88	4040	1.19
74145	88	74LS139	88	4042	1.05
74148	1.25	74LS151	79	4043	1.05
74150	1.50	74LS153	79	4044	1.05
74151	75	74LS155	83	4046	1.19
74153	75	74LS157	79	4049	55
74154	1.54	74LS160	98	4050	54
74155	75	74LS161	98	4051	1.05
74157	75	74LS163	98	4052	1.05
74160	90	74LS164	1.07	4053	1.05
74161	90	74LS170	1.80	4066	58
74163	90	74LS173	1.15	4068	42

More products and ordering information on page 69.

SELCO ELECTRONIQUE
CASE POSTALE 2036
ST-ROMUALD
QUEBEC, G6W—5M3

Circle No. 23 on Reader Service Card.

AUDIO/ELECTRONICS

KITS: Power amp., Preamp., Equalizer, Speaker protector, LED power indicator, Rack mount cabinet, Power supply, FM wireless mike, Electronic lock, Touch ON/OFF, Colour organ, Sound/light control, Electronic timer, Electronic clock, TR tester, etc. . . . WRITE FOR FREE CATALOGUE.

Come and visit our NEW STORE (opening in August 10, 1981) at:
578 Marlee Ave., Toronto, Ont. (Just one block West of Glencairn subway).
Store hours:
Monday to Friday 1:00 p.m. — 7:00 p.m.
Saturday 10:00 a.m. — 6:00 p.m.

AUDIOVISION SERVICE
P.O. Box 955, Station B,
Willowdale, Ontario. M2K 2T6

NEWTRONICS ENGINEERING INC.

NEI *10% off with this ad*

NEW **70W x 2 Complete Amp. With Regulator & Spk. Protector. Kit NA943 $128.95**

15 Steps Multi Color Audio Level Meter W/Floating Or Gradual Function. Kit NA960 $49.95

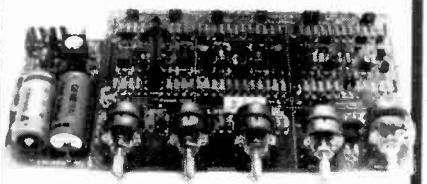

DC Class A Professional Stereo Pre-Amp. W/40 Steps Vol. Control Completed W/Regulator Kit NA923 $68.95

KIT NO.	DESCRIPTION	PRICE
NM600	Mosquito Repeller	10.95
NC700	LED Digital Clock W/2 Timer Switches (200W Relay Included)	24.95
NR801	0-50V 2 Or 4A Regulator W/Short Circuit Protection	28.95
NR803	±0-40V 4A Regulator W/Short Circuit Protection	34.95
NR806	DC Voltage Tripler	15.00

IC SOCKETS	PINS	PRICE
	40	66
	28	46
	16	24
	14	20
	8	16

Special **Sanwa YX-360TR Multitester W/hfe Probe $49.95**

Cabinets	Dimensions	Price
	3" x 8" x 19"	39.95
	5" x 8" x 19"	44.95

***For Other Items See Our Free 1981 Catalogue!**

NEWTRONICS ENGINEERING INC.
208 Spadina Ave., Suite 110,
Toronto, Ontario, Canada M5T 2W3
(416) 368-8994

—Send Cheque Or Money Order Plus $2.00 For Postage/Handling.
—Ontario Residents Add 7% P.S.T.
—Federal Sales Tax Included.

Circle No. 26 on Reader Service Card.

Electronics Today INTERNATIONAL

NEXT MONTH

At the time of going to press, the articles mentioned are in an advanced stage of preparation. However, circumstances may result in changes to the final contents of the magazine.

Ground Loops

Your twenty-first birthday comes and goes and suddenly you have more money than you know what to do with. You rush out and buy a tonne of stereo equipment. Finally, late at night you get it all connected up, hit the power switches and wait for glorious 100% pure sound to pour forth. Instead, however, when the relays click over, your ears are assaulted by this horrendous 60Hz hum. Obviously, something is wrong.

Next month we're going to look at ground loops in the context of HiFi equipment and how you can cure your loopy woes.

CP/M

This denizen of the disk is largely misunderstood by neophytes in the computer field. More powerful than BASIC in ROM, faster than a cassette interface, CP/M can make your micro a better machine to live with. Bruce Evans outlines the basics.

Projects

Next month we'll be presenting four projects to fill your evenings.

Our first project is aimed at the constructor with a dim and/or dull stereo. Next month's LED VU meter will brighten up even the most boring of systems and provides a meaningful indication of what's happening in the wires to boot.

If you have suicidal tendencies, you can safely slake them with our Russian roulette game. Easy to build and use, we predict it will be a hit at parties, in bomb-shelters, and with executives.

If you've been saving up to outfit your 1971 Dodge Polara with a tachometer (to impress your girlfriend or whatever), don't write that cheque! Next month's issue will bring a high quality bargraph tachometer that's easier to read and can serve as landing lights for moths.

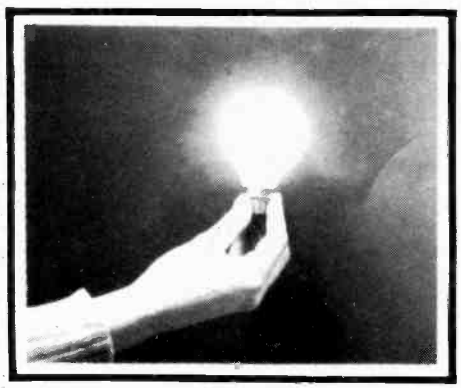

And finally, if you've ever had to put up with a power failure, you can appreciate how useful it is to have a working flashlight, candle, match, even a tired firefly. Our emergency power unit keeps its battery permanently juiced and ready for the utility eclipse. Great for the home, cottage or treehouse.

Flat Power

Flat batteries could probably solve all of society's problems. You could use them as bookmarks, to shim up a chair leg, even play a mean game of solitaire. They're also pretty decent as power sources, as John Van Lierde reveals.

Gm Revisited

Next month our theory corner will be looking at Gm. What's Gm you ask? Even if you don't ask, we're telling you. It's a neat way to figure out how to make transistors work properly, so stop groaning, sharpen up your wits and keep an eye on your mailbox for the September issue.

555 ASTABLES

Ray Marston devotes a few pages to a discussion of special application for 555 or 7555 astable circuits.

THE old-fashioned 555 timer, or its modern CMOS counterpart, the ICM7555, can readily be used as a highly stable and cost-effective astable multivibrator. Usually, the device is merely used to generate simple square waves, but in practice it is readily capable of performing some fairly fancy tricks: it can, for example, be used to generate useful ramp and sine waveforms and can be gated.

Gating The 555/7555 Astable

The 555/7555 astable can be gated on and off in a variety of ways, to produce a variety of output waveforms. Figure 1 shows the basic connections and the equivalent circuit of the standard 555/7555 astable, it is necessary to understand the operation of this basic circuit in order to appreciate the action of the various gating methods. In the following discussions, a 12 V supply rail is assumed in all circuits.

The first point to note about the Fig. 1 equivalent circuit is that the IC contains a three-resistor potential divider, two voltage comparators, a flip-flop, a transistor and an output buffer. The divider ratios are such that one-third of the supply voltage (ie. 4 V) is set on the lower comparator and two-thirds of the supply voltage (ie. 8 V) is set on the upper comparator. The circuit action is such that, in each operating cycle, C1 first charges up to 8 V through R1-R2, at which point the upper comparator activates the flip-flop and turns the pin 7 transistor on; the transistor then discharges C1 through R2 until the C1 voltage falls to 4 V, at which point the lower comparator activates the flip-flop and turns the pin 7 transistor off, causing C1 to recharge through R1-R2. The operating cycle is then complete and repeats ad infinitum. A ramp waveform with an amplitude that swings between 4 V and 8 V is generated across C1 and a rectangular waveform is generated at output pin 3.

The conventional way of gating the 555/7555 astable is with the pin 4 reset terminal, as shown in Fig. 2. When this pin is pulled to ground (by a 1k0 resistor), the flip-flop output is driven high, thus discharging C1 through R2 and the transistor and also driving the pin 3 output low. The resulting circuit waveforms are shown in the diagram. Note that, when the astable is gated on, the first half cycle is considerably longer than the succeeding half cycles. Also note that, when the astable is first gated off, the C1 voltage takes a substantial time to decay to zero. The pin 3 output is zero under the off condition.

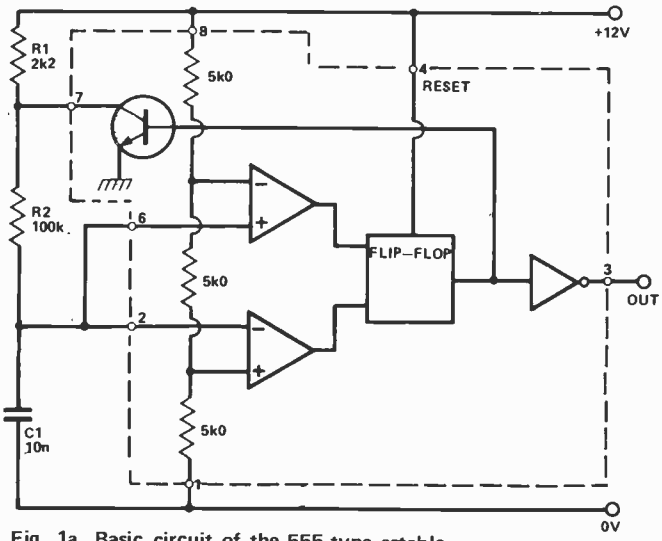

Fig. 1a. Basic circuit of the 555-type astable multivibrator.

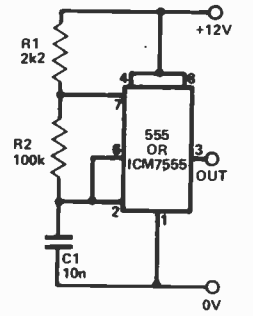

Fig. 1b. Equivalent circuit of the 555-type astable multivibrator.

Alternative Methods

One alternative method of gating the 555/7555 is shown in Fig. 3. Here, when the circuit is gated on, D1 is reverse-biased and the astable operates in the normal way, but when the circuit is gated off D1 shorts out C1 and pulls point A to ground; in practice, of course, SW1 can be replaced by an electronic switching waveform (the output of a CMOS gate, etc.) Note in this circuit that, when the astable is gated on, the first half cycle is again considerably longer than the succeeding half cycles, but that the C1 voltage falls abruptly to zero at gate-off. Also note that the pin 3 output is high in the off state.

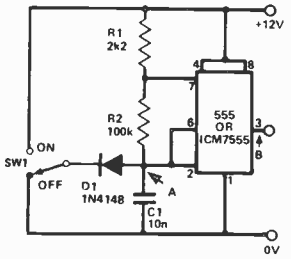

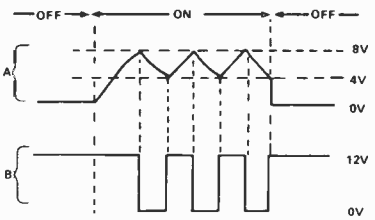

Fig.3. Basic method of gating the 555 astable using C1, with resultant waveforms. Note that the period of the first half-cycle is longer than that of the succeeding half-cycles.

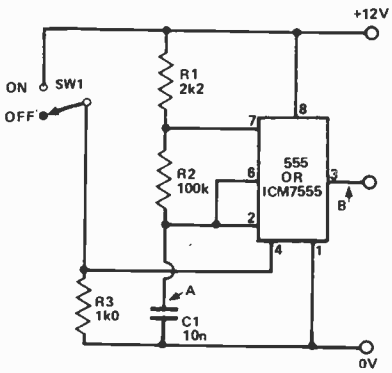

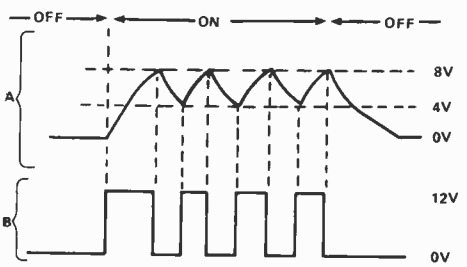

Fig. 2. Conventional way of gating the 555 astable, with resultant waveforms.

Figure 4 shows how the above circuit can be modified so that the duration of the first half cycle is almost equal to that of the succeeding half cycles. This is achieved by choosing the R3-R4 values so that the C1 voltage is only a fraction below 4 V (one-third of supply volts) under the off condition. A substantially different set of waveforms can be obtained by choosing the R3-R4 values so that the C1 voltage is a fraction below 8 V (two-thirds of supply volts) under the off condition, as shown in Fig. 5.

It should be appreciated that the 555/7555 astable can only oscillate if its timing capacitor (C1) is free to swing between the 4 V and 8 V switching levels. This simple fact makes it possible to voltage-gate the astable by using the circuit of Fig. 6. Here, the circuit produces output waveforms only when the input voltage exceeds 8 V. The circuit can be made to trigger at

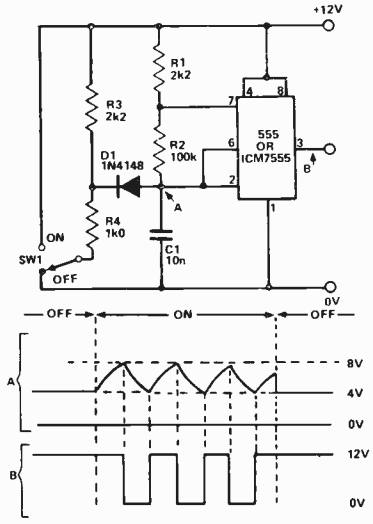

Fig. 4. Modification of the C1 gating scheme, giving constant-period half-cycles.

narrow output pulses at the 'B' terminal. This circuit is useful for generating variable-frequency constant-width pulses.

555/7555 Sine Wave Generation

Figure 11 shows how a sine wave signal can be obtained from a 555/7555 astable. Here, the symmetrical ramp waveform of C2 is buffered by Q1 and then AC coupled to the R1-R2-D1-D2 divider/limiter network. This network attenuates the ramp signal and then non-linearly removes the ramp's positive and negative peaks, to produce a sine-shaped waveform of about 1 V peak-to-other levels by giving the op-amp an appropriate voltage gain factor.

Finally, an alternative method of gating the 555/7555 astable is shown in

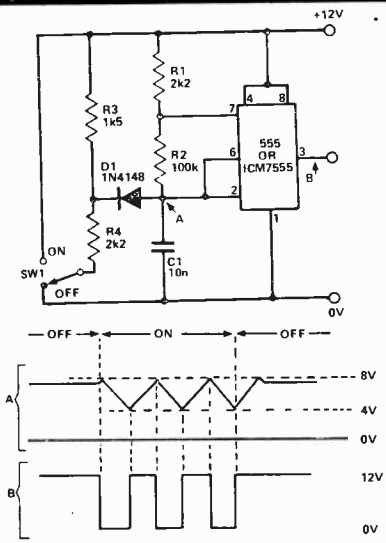

Fig. 5. This slight modification of the C1 gating scheme produces a considerable change in the circuit output waveforms.

Fig. 7. Here, the circuit is gated off by driving the C1 voltage above 8 V by D1. A feature of this circuit is that its 'B' output is low under the off condition.

Asymmetrical Astables

The basic 555/7555 astable generates near-symmetrical output waveforms, provided that R2 is large relative to R1 (giving near-equal C1 charge and discharge time constants). Figures 8 to 10 show alternative methods of generating non-symmetrical waveforms. In Fig. 8, C1 charges through R1-F2 but discharges through R2 in parallel with R3-D1, to produce the waveforms shown. In Fig. 9, C1 charges through R1 and R2 in parallel with R3-D1, but discharges through R2 only; this circuit is useful for providing narrow output pulses at the 'B' terminal.

Finally, in Fig. 10, C1 charges through R1-R3-D2 and discharges through D1-RV1-R1-R2, to produce

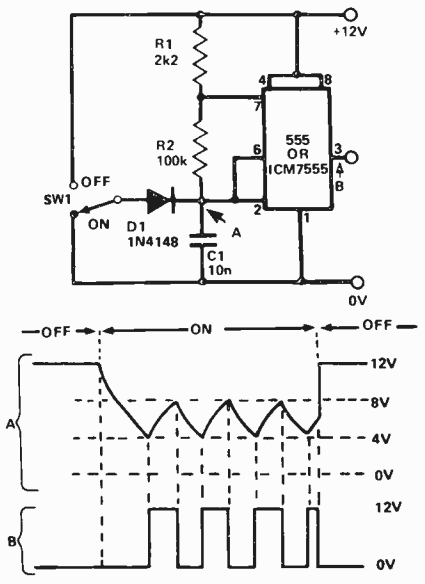

Fig. 7. This C1 gating scheme produces a 'B' output that is low in the off condition.

peak amplitude at the output terminal. The distortion level of the resulting sine wave is typically of the order of 3% and its frequency can be varied from a few cycles per minute to several hundred kilohertz by suitable choice of the C2 value.

AM Output

Figure 12 shows how the pin 3 square wave output of the 555/7555 astable can be amplitude-modulated to produce the typical attack-hold-decay envelope of a simple musical instrument or of a special-effects sound generator. The

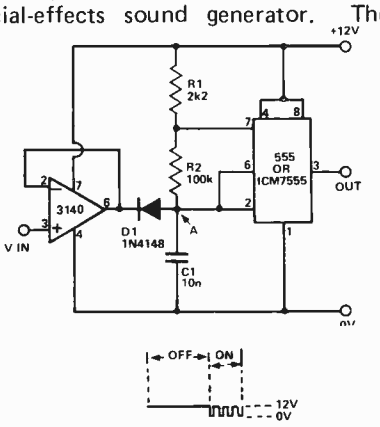

Fig. 6. The voltage-controlled astable produces an output only when Vin exceeds two-thirds supply (8 V in this example).

heart of the unit is the diode AND gate, or mixer, formed by D1-D2-R5. One input of this gate is fed from the output of the astable via R3-R4 and the other from across R6. The basic action of this gate is such that (ignoring the diode volt drops) its output amplitude is equal to the lesser of the two inputs.

Continued on page 63.

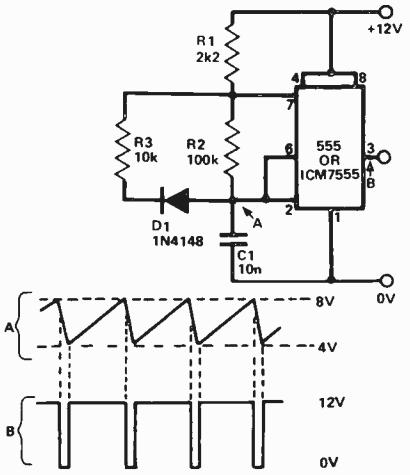

Fig. 8. A method of producing a non-symmetrical fixed-ratio from the 555 astable.

BENCH POWER SUPPLY UNIT

Designed with the beginner in mind, this bench power supply unit combines high performance and quality and yet is simple to build.

TEST AND EXPERIMENTAL equipment remains perhaps one of the most popular project areas in electronic hobbyist magazines. Rightly so, of course — the home constructor would find it difficult to build and test his projects without test gear — and the most fundamental piece of equipment (bar a test meter) is arguably a power supply. The beginner naturally uses dry cells as a power supply for his first few projects, but eventually there comes a time when his requirements are for a voltage which is impossible to obtain with batteries (eg 20 V) or a higher current than batteries can supply (e.g. 1 amp).

Bear in mind that a good power supply unit is worth its weight in gold. Consider this: you would only have to purchase 30 or 40 x 9V cells at today's prices and the power supply would be paid for!

And so the scene is set! Enter from the wings to rapturous applause the PSU, a power supply with six switched output voltages (although you can adapt to a fully variable 1V5 to 20V supply if you wish). One simple, three terminal integrated circuit, (the LM317K) does all the hard work and it features a maximum output current of 1.5 amps, more than adequate for 99% of projects. The IC is called a voltage regulator and this particular variety has been around for three or four years now. That must say something for its quality and reliability in these days of rapidly changing technology. The alternative is a voltage regulator, using relatively expensive discrete transistors. However, of necessity these discrete component voltage regulators are complicated if they are to be as efficient as their IC counterparts. Because of this, there are more things to go wrong (as we all know, the well-known 'Murphy's Law states what can go wrong — will!)

Given that all connections are correct our PSU is virtually indestructible. Even a direct short circuit on the output will do no damage, an internal current limiter keeps things in order. In this way, of course, there is less likelihood of a circuit under test being damaged if, say, it has a short circuit due to a solder bridge between tracks. A simple dry cell battery would continue to pass current at its highest rate until removed, by which time damage may have been done. The LM317K continually monitors its own output current and if it is too high it "folds back" ie it switches the output current off. When the short circuit is removed or repaired the regulator automatically switches the current back on.

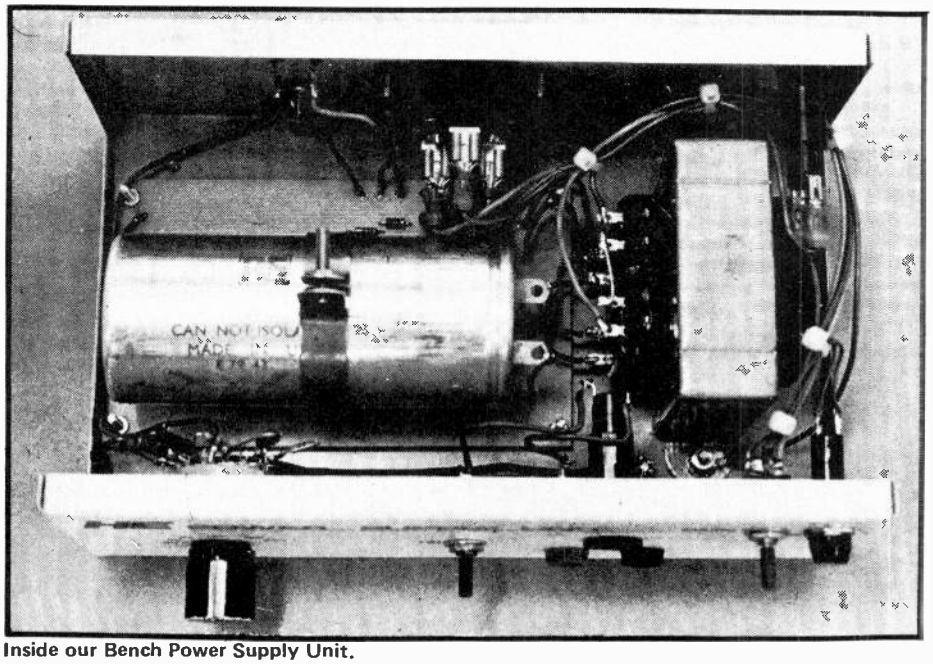

Inside our Bench Power Supply Unit.

Construction

Care must be taken with the primary part of the circuitry ie everything up to and including the power transformer T1 (the left hand side of the circuit diagram of figure 1.

The first constructional step is the marking and drilling of the case. Ideally, a mild steel case should be used, in order to reduce electrical interference with other equipment which may be positioned close to the power supply. Mount the transformer on the base, leaving enough room for the PCB, bearing in mind the size of the capacitor C1. Bolt the fuse holders power on/off and DC on/off switches, neon (with integral resistor), output sockets and IC1 to the case, leaving only the six-way rotary switch and the PCB out.

Insert a grommet in the cable hole, push through the power cable so that enough cable is inside the case to complete all of the AC line side wiring(figure 3). We have shown all wires to be loose in the figure but when wiring up your supply, form all wires around the edge and keep them together using cable ties lacing cord or ordinary string — whatever you have at hand. Fasten the cable

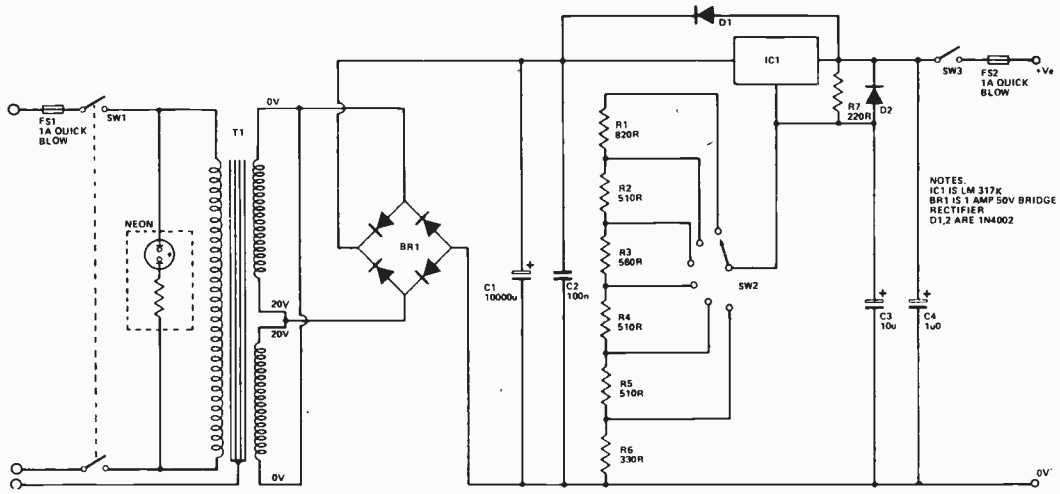

Fig. 1. The ETI Bench PSU circuit diagram. There's not a lot in it, but what is there does the job well.

HOW IT WORKS

Transformer T1 provides the necessary step-down function from 120 VAC to 20 VAC which the rest of the circuit requires. It also isolates the low voltage side from the high-voltage (line) side ie there is no *electrical* connection from line to low voltage output.

The 20 V AC obtained at the transformer secondary is rectified by bridge rectifier BR1 to DC. Filter capacitor C1 "smooths out the bumps" providing a fairly level input voltage of about 28 V DC to the voltage regulator IC1.

The output voltage of IC1 is given by the formula $V_{out} = 1V25\ (1+R2/R1)$.

where R2 and R1 are as in figure X by fixing the value of R1 at 220R then R2 can be calculated from the above to be

$$R2 = 220\ \left(\frac{V_{OUT}}{1V25} - 1\right)$$

Simply by inserting whatever value of Vout we require into the formula, we obtain the necessary value of R2.

$$\text{eg } R2 = 220\ \left(\frac{3}{1V25} - 1\right) = 308R$$

The nearest preferred value is 330R, therefore the output voltage is slightly over 3 volts DC. This resistor corresponds to R6 in the circuit of the ETI PSU and position 1 of the rotary switch SW2. By combining R6 with R5 in series and by turning SW2 to position 2, an overall resistance of

330 + 510 = 840R

is obtained giving a voltage of 6 VDC. Similarly the remainder of the voltage steps ie 9 V, 12 V, 15 V and 20 V are obtained by adding further resistors into circuit by means of SW2.

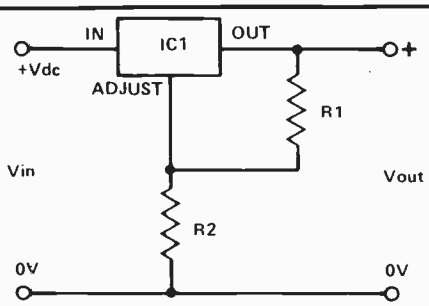

The resistor chain and SW2 could be replaced by a potentiometer to give a continuously variable output voltage but an expensive panel meter will then be required, to allow reading of the voltage. Switched resistors give a sufficient range of voltages and obviously keep the cost down considerably.

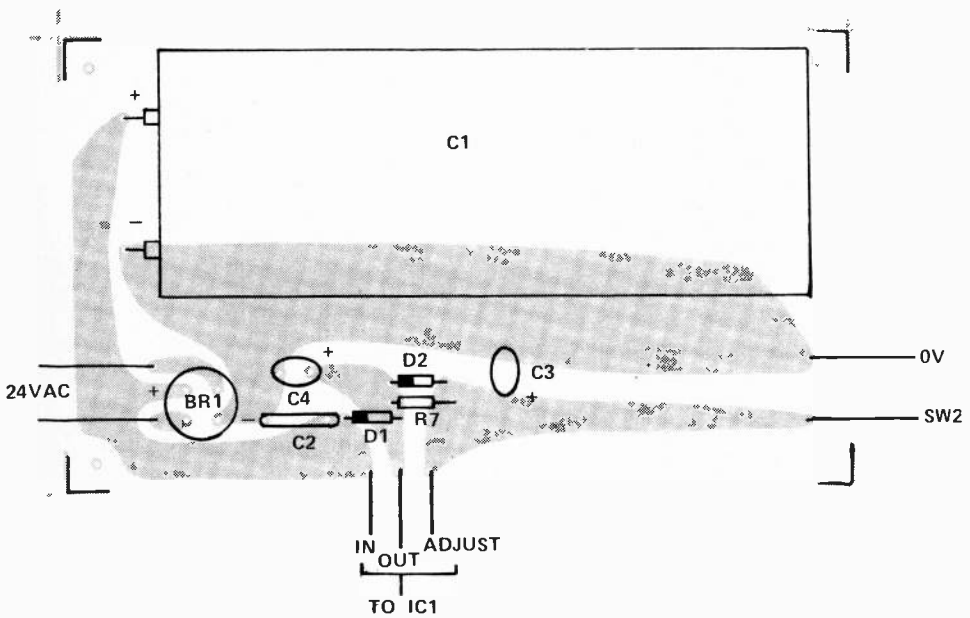

Fig. 2. Overlay details of the printed circuit board. It is important that capacitor C1 is polarised correctly.

PARTS LIST

RESISTORS (All ¼W, 5%)

R1	820R
R2,4,5	510R
R3	560R
R6	330R
R7	220R

CAPACITORS

C1	10,000u 40 V electrolytic, single ended
C2	100n polyester
C3	10u 35 V tantalum

SEMICONDUCTORS

IC1	LM317K voltage regulator
BR1	1A, 50 V bridge rectifier
D1,2	1N4002 diode

MISCELLANEOUS

SW1	Double-pole, double-throw toggle switch
SW2	6-way rotary switch
SW3	Single-pole, double throw toggle switch
FS1,2	Panel mounting fuse-holders and 1 Amp quick-blow fuses.
Neon	Panel-mounting with integral resistor
T1	20V, 20VA power transformer
Grommet, cable clip, knob, 2 x 4mm O/P sockets, case to suit, mounting clip for C1.	

as it comes through the case wall using a bolt-on cable clip or similar. This prevents the cable from being pulled out. Alternatively, you could use a plug and socket connector assembly as we did (see photographs).

We advise the use of rubber sleeving to cover the joints where a power lead joins external hardware eg a switch or a fuse holder. This can help safeguard against electric shock hazards. You can test your wiring at this point if you have a meter. Measure the output voltage of the transformer when switched on. It should be about 25-30 V AC under no-load conditions.

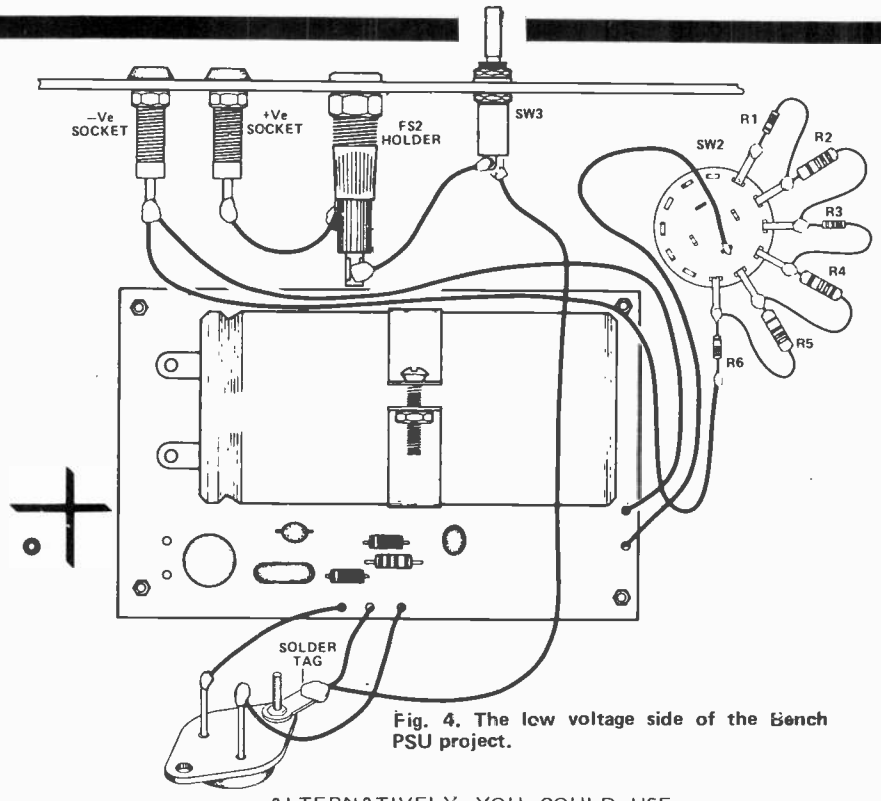

Fig. 4. The low voltage side of the Bench PSU project.

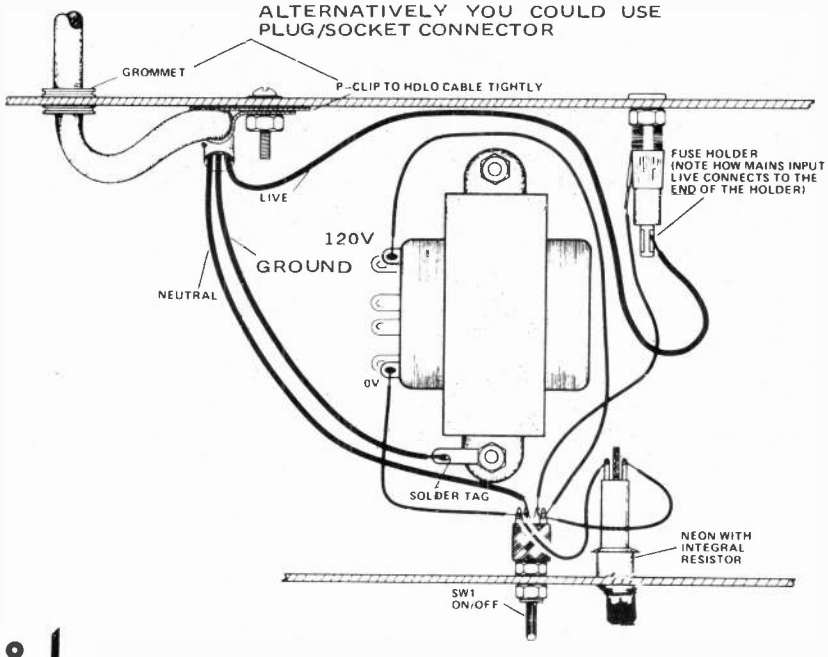

Fig. 3. Shows connection details of the line circuitry. Care is needed as line voltage can be dangerous.

Once the line voltage side has been wired in, the PCB can be completed. Mount C1 on the board using a capacitor clip and solder the tags to the board making sure it is polarized correctly ie the tag close to the red dot or positive marking on the capacitor goes to the positive connection on the PCB. Then SW2 (the rotary switch and resistors) can be mounted. Note how the resistors are mounted on SW2 and make sure you get them in the correct order. You won't do any damage if they are in the wrong order but the output voltages will not be correct.

Next, wire up the PCB, the two switches and the output sockets as in the connection diagram, again taking all leads neatly around the outside of the case and tying them together. Finally, wire in IC1 to the PCB.

At this stage, the PSU is complete and should work first time. Measure the DC output using a meter and check that all the settings are correct. If you possess a 25 V or a 30 V panel meter, an alternative suggestion is to insert a 4K7 linear potentiometer in the front panel instead of the SW2-resistor combination, with the meter across the output and use it to give a reading of the now fully-variable output voltage. ●

PROBLEMS? NEED PCBs? Before you write to us, please refer to 'Component Notations' and 'PCB Suppliers' in the Table Of Contents. If you still have problems, please address your letters to 'ETI Query', care of this magazine. A stamped, self addressed envelope will ensure fastest reply. Sorry, we cannot answer queries by telephone.

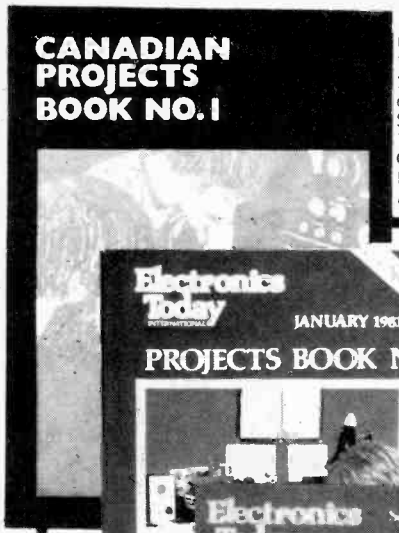

Canadian Projects Book No.1
100 pages **$3.00**
25 of our most popular projects from our earlier issues including: Audio Limiter, 5W Stereo, Bass Enhancer, Modular Disco, 50W/100W Amp Modules, IB Metal Locator, Touch Organ, Electronic Mastermind, Double Dice, Reaction Tester, Sound Operated Flash, Burglar Alarm, Injector-Tracer, Digital Voltmeter.

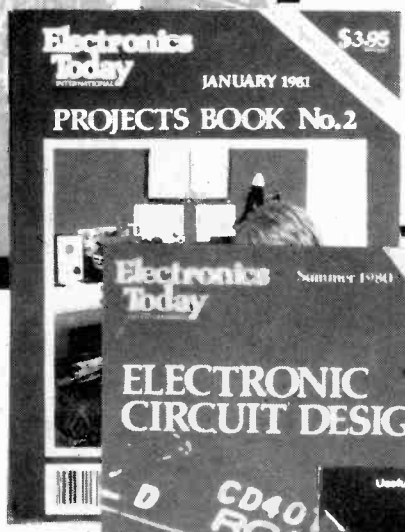

Projects Book No. 2
100 pages **$3.95**
Contains 25 of the best projects from recent issues including the High Performance Series 4000 Amplifier (including Preamps and Power Supply), Rumble Filter, Dynamic Noise Filter, Logic Probe, Cable Tester, Function Generator, Rain Alarm, Digital Tacho, Two Octave Organ, Light Chaser, Shutter Speed Timer, Ni-Cad Charger and more. First published January 1981.

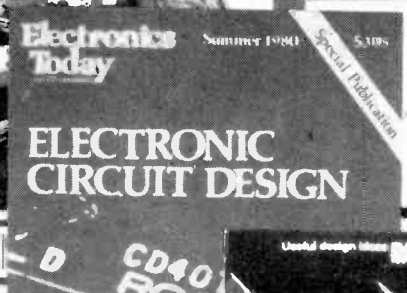

Electronic Circuit Design
92 pages **$3.95**
A collection of major articles on various aspects of circuit design including CMOS, Audio Amplifiers, Power Supplies, SCR's, Op-Amps, Using the 3080 and Temperature Control. A large number of useful circuits are given but the emphasis is on guidance and how to tackle the design for yourself.

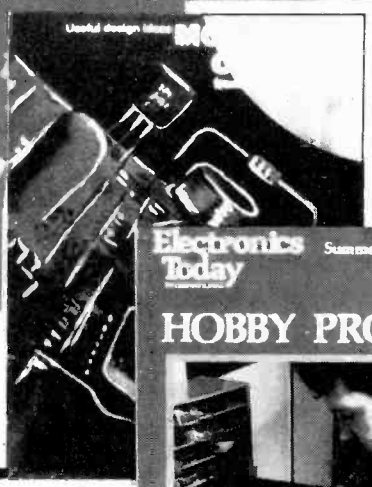

More Circuits
108 pages **$4.50**
Over 150 circuits plus articles on Circuit Construction, Test Gear, a project on a Digital Panel Meter, Design notes on Speaker Crossovers, TTL pin-outs, Design notes on Crystal Oscillators.

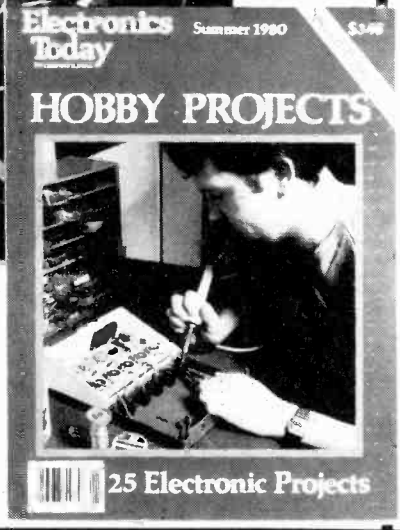

Hobby Projects
100 pages **$3.95**
First published Summer 1980. Contains 25 straight-forward projects most of which have never appeared in the magazine including: Stereo Amp, Audio Mixer, Scratch and Rumble Filter, Constant Volume Amp, Graphic Equaliser, Envelope Generator, White Noise Effects Unit, Linear Scale Ohmmeter, Intercom, Drill Speed Controller, LED Tacho, Parking Meter Timer, Electronic Organ, Touch Switch, Electronic Dice, Siren, Simple Receivers.

ETI SPECIALS

Available from your local electronic parts store or direct from ETI (please add 45c each to cover postage).

Send money to:
Electronics Today Magazine,
Unit 6, 25 Overlea Blvd.,
Toronto, Ont.,
M4H 1B1

NEED MORE INFORMATION?

If you would like more information on the products or services mentioned in the advertisements:

1. Fill in the attached card with your name, address, etc
2. Circle the appropriate Reader Service number for further information about advertised products.
3. Mail the card and the advertiser will send you literature free of charge. If the card has been removed, or if you want the information in a hurry, phone or write direct to the advertiser and refer to the ETI issue and page number.

Your Company Classification (if applicable):

A. Manufacturer
B. Retailer
C. Government
D. R&D
E. Servicer/Installer
F. Distributor/Representative
G. Educational Institution

In the field of:

1. Computer and Related Equipment
2. Communications Equipment & Systems
3. Navigation, Guidance or Control Systems
4. Test & Measurement Equipment
5. Consumer Products
6. Industrial Controls & Equipment
7. Components & Subassemblies
8. Other (Please specify on the card)

Your major job function (if applicable):

A. Buying
B. Technologist
C. Educator
D Not employed in an electronics-related field
E. Engineering
F. Technician
G. Management
H. Sales
I. Other (Please specify on the card)

What interests you most about ETI? (your favourite five or less):

A. Audio
B. Video
C. Ham Radio
D. Shortwave Listening
E. Servicing
F. Components & Technology
G. Reports on the Electronic Industry
H. Microcomputers
J. Projects
K. News Digest
L. Other (Please specify on the card)
M. Tech Tips

WHAT'S NEW

By Steve Rimmer

THIS WEEK MARKS THE END of what might have been one of the most innovative of the Southern California fly-by-night computer system companies, a spark of pure capitalistic evil when all around was just mediocre avarice and dirty dealing. It began, as so many of these things do, in a tool shed in in a subdivision in Marina Del Vista Mar San Waldo, a prosperous suburb of greater Los Angeles. From this humble beginning, over eighty five different products (eighty six, actually) emerged to blow the fuses of computer owners around the world, all bearing the familiar sabre toothed gerbil logo of The Flying DiMeglifestafionioli Brothers and Associates.

There are those who would say that the closing of this promising young firm, after only a year and a half of operation, is due to the inflationary economic cruelties of our times. However, I think that the problem was far more subtle than either of these. Much of it lay with the computer industry, which was unable to accept the sorts of radical design concepts the brothers were using.

Some examples of this prejudice are easy to see. For example, the range of parts used in the designs of their boards was rather restricted. . . largely limited to old DTL chips which had had the numbers rubbed off with sand paper. It should be said in their credit, however, that every board that left their premises was functional. Each one did something. . . in most cases, smoked and/or burst into flames. A few of the more sophisticated ones exploded.

Perhaps even more innovative than the actual system architecture of the brothers' designs was the novel approaches they took to marketing their equipment. Consider the ad in one major computer magazine for an eight inch disc drive for $99.00 (crank optional at $12.50 extra). However, I think that the most interesting item in the catalog had to be the digitally controlled four voice synthesizer.

We'll probably never know where the bothers found all the war surplus bugles they sent out, or what they figured the average user needed with a wind sock. There was, however, a beautifully designed interface card which allowed the processor to drive the four electric washing machine valves crazy glued over the mouthpieces of the instruments causing only moderate damage to the system's I/O ports, plus a really nifty plastic hand, which could be servo controlled to handle the mute. There was a complete set of documentation provided (usually either a Xerox of the instructions for rebuilding a Buick carburetor or the owner's manual for the French built *Piednonstencho* ultrasonic foot deoderizer). The system could be put together with equal ease by either an expert or a complete amateur, and it must be stated that of the three hundred and twelve people who bought the interfaces, only two ever felt moved to write in and complain.

Of the rest, only eighty five showed up armed with anything larger than a .32. Many only brought knives, clubs or hot tar.

Neither of the brothers were available for comment after the announcement of their dissolution. Their whereabouts appears to be unknown, or, at the very least, unavailable on anything other than a 'need to know' basis, and then only to officials of the FBI and the Treasury Department. I talked briefly with one of the brothers' distributors in Carmel to inquire as to whether we might hope to see their products on the market again sometime in the future. Alas, the answer was. . . probably not. However, extradition laws can be changed.

With the brothers no longer operational, there are relatively few workable computer music systems around. Well, I suppose that situation wasn't much different before their place was mortared. In any case, we're going to have a look at one of the finest ones this month. . . the creator of which couldn't see much use for a windsock either.

More Komputermuzik

Remember Dave McLey? . . . we got to look at a bit of his studio a few months ago. Well, in the interval between then and now, it has sprouted some new appendages, and become still more surreal and karmic and generally mind blowing. For one thing, all the lights now light, the paraphenalia squeaks and whistles upon command. . . you gotta know the command, though, . . .and things generally sound off in the most fascinating ways. Thus it was that I, possessed of nothing more than a belly full of Quarter Pounders with cheese and a slightly dinged up Pentax once bought late at night from a poor Swedish phosphor peddler (another story, this) dangling from about my neck, did once again venture into the chrome plate and smoky green plastic of Toronto's dive nuvea, Yorkville, to see what the alchemist of computer music was presently up to.

Actually, when I got there, he wasn't up to much of anything. The system was down. I suggested it had blown a fuse, which earned me a kind of sour look. We thereupon went for lunch . . .which really made me regret I'd pigged out at Mac's. Half an hour later, upon returning, things were again functional and cool. They'd located the burned out fuse, changed it, and all was benificient and wonderful. 'You want a score?' McLey asked, proffering me a page of sheet music.

'Oh neat.' It looks like Bach. Actually, it is Bach except that it says

'copyright 1981 by Dave McLey'. Shades of Jethro Tull.

'I haven't got around to changing that.' He explains. 'It thinks everything it does is by me.'

What is neat about the score, though, is that it is neither hand drawn, nor has it been printed, exactly. The computer did it. It was reproduced under machine control on a Hewlett Packard plotter. It can also be displayed, with resolution at least as good as the printed page, on the CRT of a terminal. When you play something on the music system's keyboard, it will churn out a score for you. 'It still thinks F-- is the same as a G natural, but we'll have that out in a day or two.'

There's this chick with blond hair and big glasses who wanders in and out from time to time carrying an armload of printouts. McLey is still adjusting the software.

Anyway, it has a harpsichord voice. Just like an electric piano, except this once sounds like a harpsichord. If you didn't know you were in McLey's office listening to his computer you'd swear you were in the workshop of Herz or Zuckermann, tucking your ears into the seventeenth century. 'Does it sound fairly real?' He asks.

'Well, ya. You can't hear the plectrums on the strings, or the keys bottoming out, but other than that it sounds about right.' The harpsichord I've played had a manual and plectra of genuine authentic plastic; anyone familiar with a decent instrument probably wouldn't be as concerned with the lack of these sounds. Maybe 'Harpsi 4' could be developed to produce the sounds of bargain instruments.

He sets the prelude to play repetitively. 'It'll have thirty two voices in a while; I've only got eight going now, 'cause we're still changing them.' McLey says. Each voice is, in fact, a digitally controllable analog synthesizer all by itself. 'My engineers just love it when I hand them a board they've been working on for a month and say 'it's really nice. . . now change it to do this and this.'

'Changing the voices is just a matter of telling the machine to play differently . . .all the patchcords are virtual.' He types a few characters, and in the space between two notes the computer instantly repatches itself and plays horn. Good horn, too. Not like me; on my best days I sound like a moose call. The changes are glitchless, and require so little typing that it's possible to change the patches on the fly during a performance.

'It also does things like adjusting the mix,' He can bring down the level of one voice relative to the rest from the keypad on the terminal, 'and pans from right to left, and so on.'

It also handles transposition, right there before your very ears. If it's sitting there cranking out a piece, it can be instructed to do it in a different key, just by using the organ keyboard. Thus, if it started out in C and a D- were played on the board, it would start playing the stuff such that all the C's were D-'s and all the other notes were shifted accordingly. It can, in some cases, actually transpose up or down the full span of the keyboard, although, for practical purposes, after about three octaves things get a bit odd.

There's something you can do with this feature that's really quite weird. Given that the system is playing a piece, it is possible, by using the transposition thing to play the playing of the piece, transposing it in relation to another score. Be neat with a harmony line.

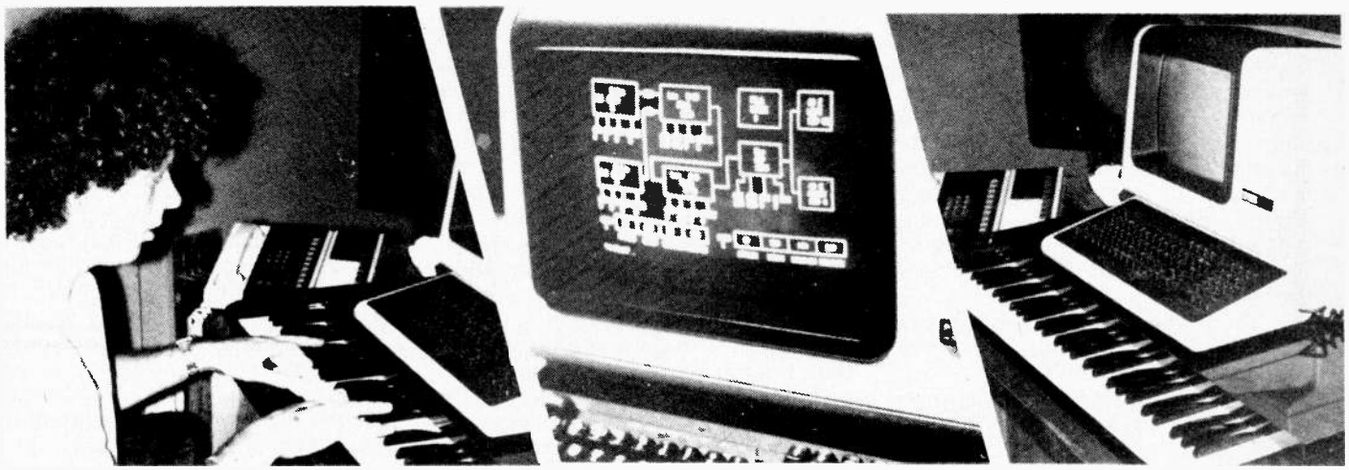

'I'm gonna show you some of what it can do,' He begins, 'But if you come back in three days it'll be able to do a whole new set of stuff it can't do now. I just got the voice boards redone, and it sounds. . .'

Harpsi 3

'Prelude' is the name of the file the Bach piece is stored in. It's called up by telling the machine to 'Play Prelude'. Once it's playing, it can be told exactly what to play it with. 'Harpsi 3', a harpsichord voice patch, would tell it act like a harpsichord. . . it could, however, just as easily be a tuba, a log drum, or a frog. A frog?

'Ya, well, I was fooling around with it the other day, and I had this voice, which I called 'frog'. It's still in there.' There's also a voice that sounds vaguely New Wave, although the file name is not reproduceable in a family publication. Bach doesn't suit New Wave, anyway.

Overdubdubs

If you take one voice, and put something on it, say a rhythm line, it is possible to add up to seven other lines by overdubbing them, just like on tape. As the first voice plays away, additional stuff can be played on the keyboard, from whence it gets loaded into memory in the conventional manner. However, there are a lot of things you can do with this approach that couldn't happen on tape.

One thing, of course, is that the data in memory, essentially pitch and rhythm, does not presuppose any particular voicing. Thus, if it is easier to hear a specific track played like a Hammond organ while overdubbing, that's cool, even if it's going to be a sitar in the final mix. The speed can easily be altered, as can the time signature; both can be one thing for entering the score into the system and quite another upon performance. There is also an adjustable degree of resolution on the notes . . .ah ha!

Continued on page 64.

PULLING THE PLUG

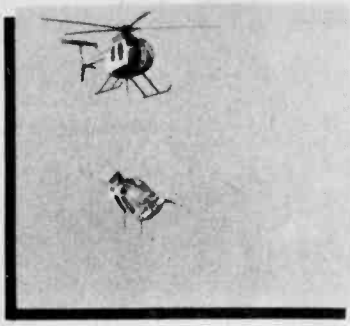

A Peek At An Upcoming Project

These photos were shot during some of the testing of a soon to be presented project; the ETI homebrew helicopter. Featuring an easily obtainable Daimler-Benz engine, relatively simple metalwork, and complete microprocessor control of all vital functions, the do-it-yourself chopper should be the ideal project for the advanced constructor, especially anyone who found our nuclear power plant kit an interesting challenge. When complete, the aircraft will provide you with hours of carefree flying, and make you the envy of your neighbours (not to mention the DOT).

The three photos shown here were shot during a test sequence a few weeks ago. The first shows the aircraft under manual control. The second illustrates the chopper a moment after engaging the microprocessor autopilot, and the third . . .well, we're still having a few problems with the PCBs. In the same issue as we present the first installment of the construction details, we also hope to be offering all ETI readers some low cost war surplus parachutes we picked up cheap.

Now, it should be stated that the helicopter is not recommended for the beginner. If you've been having trouble getting your electronic dice project to work, maybe you should get a few more under your belt before tackling this baby. Also, readers should be aware that a few specialized tools and some test gear will be required. At the very least, you'll want a storage scope, a laser refractometer, a micro-wobbulatometer, a metalurgical infra spectroscope, a titanium boring lathe, a .001 mm finger gauge and an IBM 370 processor system for doing your initial calculations and set up. Please do not plan to complete the project by skimping on these minimal essentials. . . a credit card calculator just won't do.

The helicopter will be built on thirty seven easily made printed circuit cards. In addition, a complete kit of the metalwork will be made available for the nominal charge of $102,987.99.

Watch this space for more news on this groundbreaking ETI project.

'Pulling the Plug' is a forum specifically for the dissemination of lies, falsehoods, untruths and similar deviations from reality. We take no responsibility for it should anything turn out to be factual.

Designer Circuits

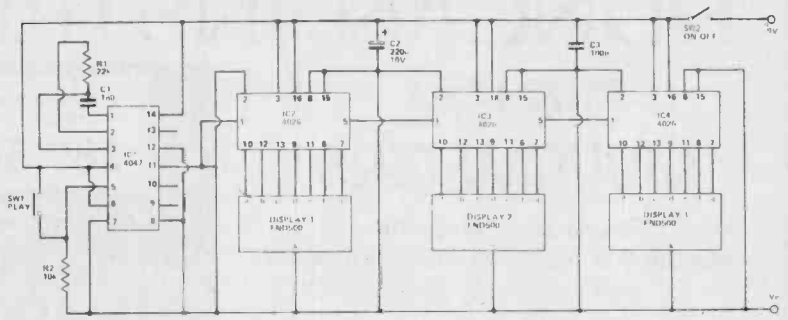

ONE ARMED BANDIT

This circuit is designed to give an approximate simulation of a one armed bandit slot machine, and is only intended for home-entertainment purposes. The unit has three seven segment LED displays, and when a pushbutton is depressed, all display segments appear to light up. When the button is released, a random number is displayed. The idea of the game is to obtain a row of three identical numbers in the display, with (say) 1 point being scored for "000", two points for "111", etc., up to 10 points for "999". The object of the game is to score as many points as possible in an agreed number of attempts, say 25 or 30.

The circuit consists basically of a clock oscillator using IC1 and a three stage counter which uses IC2 to IC4. The 4047 CMOS device used in the IC1 position is a monostable/astable device which is used here in the true gating astable mode. Under quiescent conditions R2 takes the gating input (pin 5) low, and prevents the circuit from oscillating. Depressing SW1 takes the gating input high, and starts the circuit oscillating at a frequency which is controlled by R1 and C1. The specified values give an operating frequency of about 10kHZ, although the exact frequency is unimportant, it just needs to be reasonably high.

The display section uses three CMOS 4026 decade counter/seven segment decoders, which can be used to directly drive high efficiency common cathode displays such as the FND500, DL704, etc. The three display circuits are connected in series, in the normal way, so that one thousand clock pulses take the display through every number from "000" to "999", and then back to "000" again.

Thus, when SW1 is operated the display cycles through every number about ten times per second, with all the display segments appearing to switch on continuously as the action of the display is too fast for a human observer to perceive. When SW1 is released, the display is "frozen" at whatever number it happened to be displaying when IC1 ceased oscillation. There is, of course, no way of operating SW1 to definately obtain one of the winning numbers, and it is purely a matter of chance whether or not one of these is displayed, as is the case with a real one armed bandit machine.

IC1 to IC4 are all CMOS devices, and normal CMOS handling precautions should be observed when dealing with these. The current consumption of the unit can be over 50 mA when certain numbers are displayed, and a large battery such as a 276 should be used as a power source.

DIECAST BOXES

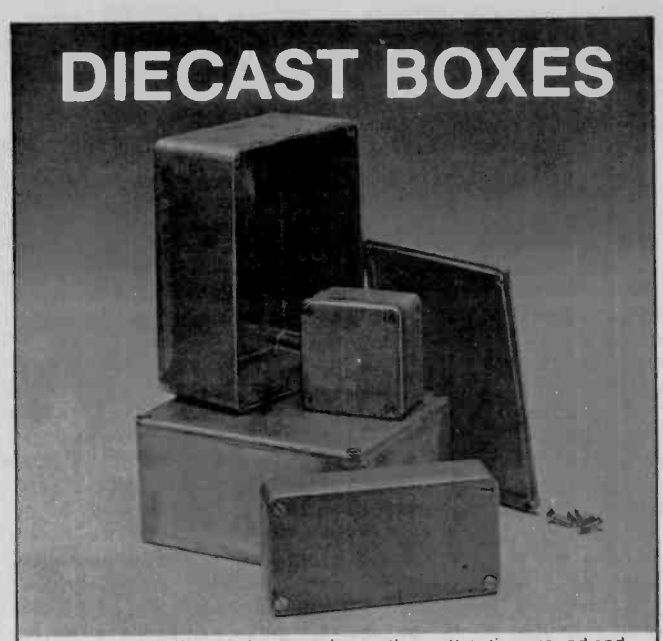

An improved diecast aluminum box with an attractive ground and tumbled surface. Comes drilled and tapped with countersunk interlocking lid and necessary screws. R.F. shielding properties make the smaller sizes excellent for R.F. connectors. Seven sizes from 2" x 2" to 7" x 7" approx. Available from authorized distributors coast to coast.

FREE CATALOGUE

HAMMOND MANUFACTURING

Hammond Manufacturing Co. Ltd.
394 Edinburgh Rd., Guelph, Ontario N1H 1E5

Ph. (519) 822-2960 or
(416) 456-3770
Tx., 069-56523

Circle No. 9 on Reader Service Card.

DUNCAN INSTRUMENTS LTD.

DIGITAL MULTIMETERS

INPUT IMPEDANCE: 10 megohms
RANGES: DCV – 200 mV, 2/20/200/1000 V
ACV – 200 mV, 2/20/200/700 V, max RMS
DC/AC Current – 200 uA, 2/20/200 mA, 1A
Resistance – 200 ohms, 2/20/200K, 2/20 Meg ohms
Accuracy – DC 0.5%; AC 0.8%
Supplied complete with leads, battery, carrying case.

Model GL-35C: LCD readout, 12 mm high
Model GL-35E: LED readout, 12 mm high

* Either model, $89.50 FST included
In Ontario, add 7% PST
FOB delivered in Canada

COMPLETE "IN-HOUSE" SERVICE
SALES – CALIBRATION – REPAIR

DUNCAN INSTRUMENTS LTD.
ELECTRICAL MEASURING INSTRUMENT SPECIALISTS
122 MILLWICK DRIVE, WESTON, ONTARIO • M9L 1Y6
TELEPHONE (416) 742-4448 • TELEX 065-27271

Circle No. 11 on Reader Service Card.

WIRED SOUND

A system for distributing a Hi-Fi or other audio signal to any number of remotely-located speakers, using the power lines as the communication link.

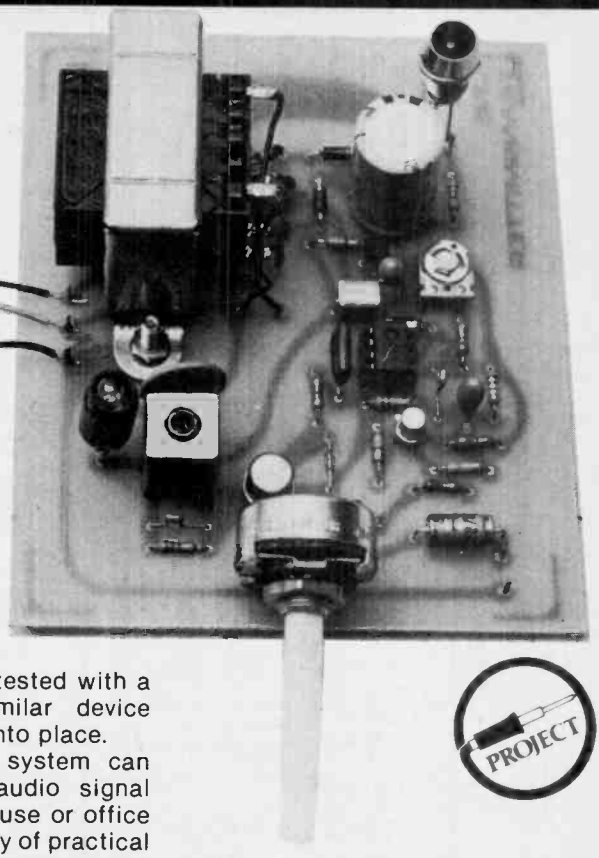

THIS UNUSUAL PROJECT is designed to distribute an audio signal to any number of speakers that are remotely-located throughout a house or office building, using the power lines as the communication link. The system has an overall audio frequency response that extends to 20 kHz, with typically less than 0.5% total harmonic distortion and is designed to deliver a maximum of about 2 watts to each speaker. The system rejects all unwanted noise and has an overall audio sensitivity of about 10 mV for 2 watts output on each speaker.

The system comprises a single transmitter unit and any required number of remotely-located receiver/amplifier units. The transmitter unit generates a 200 kHz carrier signal, which is frequency modulated by the audio input signal and which the transmitter superimposes on the neutral line of the 120 volt AC wiring. At each receiver unit, this FM signal is picked up from the lines, is amplified, demodulated and the resulting audio signal is then fed to an external eight ohm speaker via a 2 watt power amplifier IC.

The transmitter and each receiver unit is provided with its own volume control. Each receiver unit is also provided with an automatic mute facility, which disables its audio output when the transmitter is turned off. All units are line powered and simply plug into existing wall sockets, no other interconnections being required. All units incorporate a variety of safety features, but it is essential for correct operation that the sockets be wired in the correct polarity: each socket should thus be tested with a neon indicator or similar device before plugging a unit into place.

The Wired Sound system can readily distribute an audio signal throughout an entire house or office building and has a variety of practical applications. In the home, it can be used to transmit the output of a music centre or other audio source to all rooms in the building. Alternatively, the transmitter can be fitted with a microphone and pre-amp and used as a baby alarm, enabling the baby to be heard from any part of the house.

In an office, the transmitter can be coupled to a mixer unit and used to distribute music signals and announcements throughout the entire building without the expense of having to fit additional wiring.

Construction: The Transmitter

The entire transmitter unit, including the power transformer, is assembled on a single PCB. Construction should present few problems if the usual precautions are taken to ensure that all semiconductor devices and electrolytics are fitted in the correct polarity.

When construction is complete, set the core of L2 and the slider of RV1 to mid position. If you have a 'scope, give the unit a functional check by checking that a signal of a few hundred mV at about 200 kHz is present across the output terminals of T2: set the frequency to precisely 200 kHz via RV1 and trim the core of T2 for maximum output.

You can, if you wish, case the complete unit; our own prototype is uncased, as it is intended to be built into an existing audio amplifier system.

Construction: The Receiver

Most of the receiver unit (except T1, RV2, SW1 and LED 1) is wired up on a single PCB. Construction should present few problems if the overlay is followed with care. When construction is complete, fit the PCB and remaining components into a suitable case and complete the interconnections to T1, RV2, SW1 and LED 1, as indicated on the overlay and the circuit diagram.

When construction is complete, set the core of T2 and the slider of RV1 to their mid position, connect the output of the unit to an eight ohm speaker and switch the unit on. With mute switch SW1 on, little noise should come from the speaker: with SW1 off, lots of 'white' noise should come from the speaker, indicating that the system is functional. If you have a 'scope, monitor pins 4-5 of IC1 and adjust RV1 to obtain a frequency of about 400 kHz.

Setting Up The System

Access to a 'scope is needed when initially setting up the system, as follows.

Switch on both units and apply a suitable audio (music) signal to the input of the transmitter. Turn the transmitter volume control to zero,

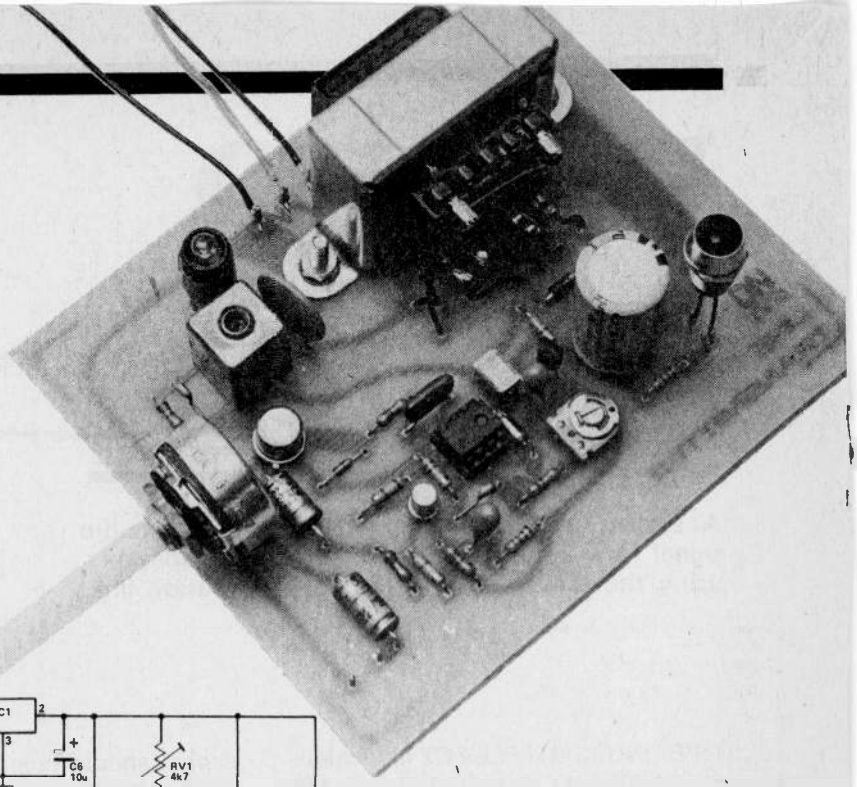

Fig. 1. Circuit diagram of the Line Transmitter.

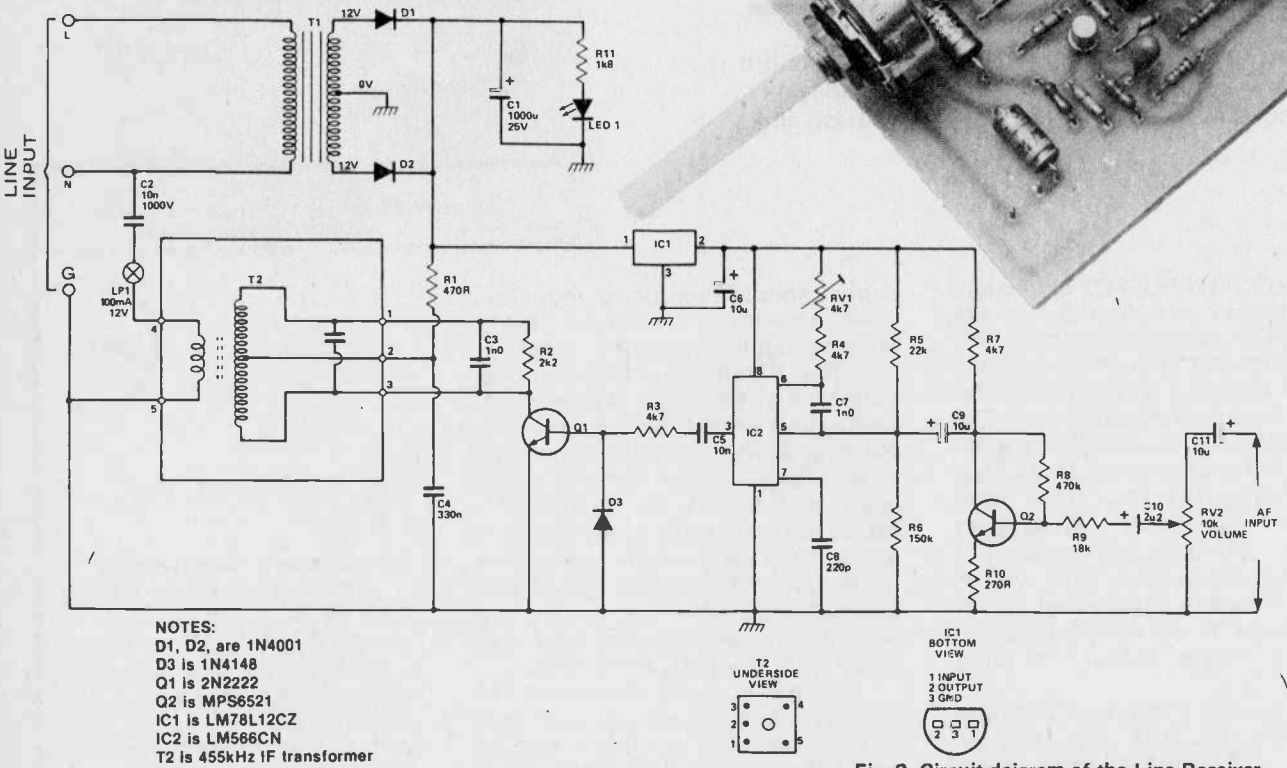

NOTES:
D1, D2, are 1N4001
D3 is 1N4148
Q1 is 2N2222
Q2 is MPS6521
IC1 is LM78L12CZ
IC2 is LM566CN
T2 is 455kHz IF transformer

Fig. 2. Circuit daigram of the Line Receiver.

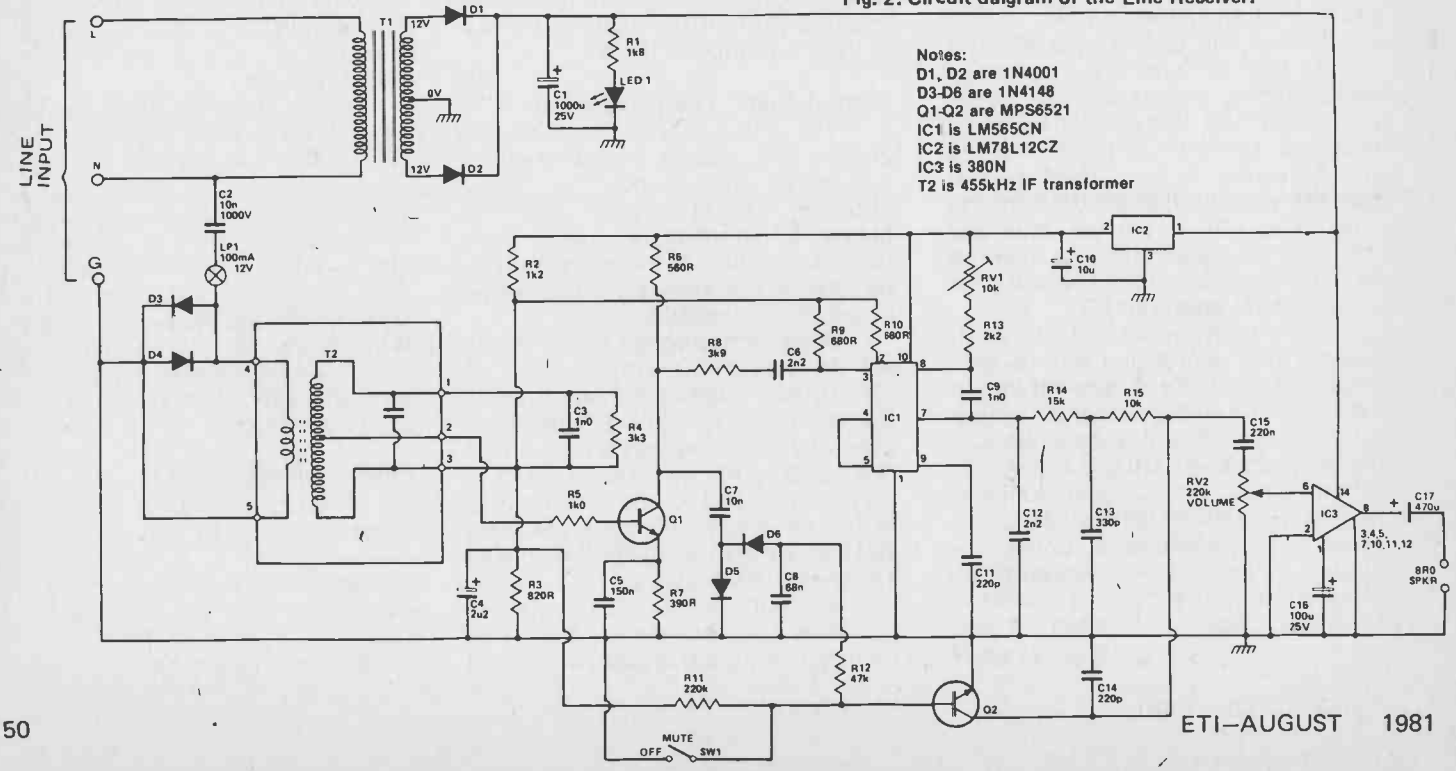

Notes:
D1, D2 are 1N4001
D3-D6 are 1N4148
Q1-Q2 are MPS6521
IC1 is LM565CN
IC2 is LM78L12CZ
IC3 is 380N
T2 is 455kHz IF transformer

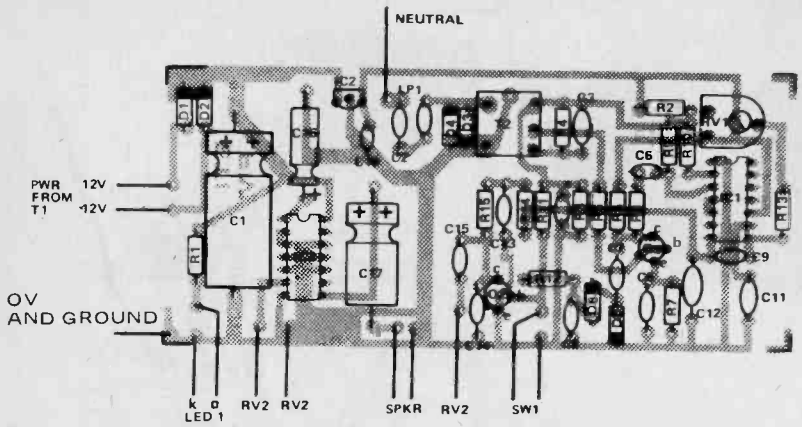

Fig. 3. Component overlay for the transmitter board.

use the 'scope to monitor pin 2 of T2 in the receiver and adjust T2 core for maximum signal. Next, monitor pins 4-5 of IC1 in the receiver and set RV1 to the mid position at which locking to the 200 kHz carrier occurs. Finally, set the receiver volume control to mid value and adjust the transmitter volume control so that the music signal is heard at the receiver without apparent clipping. The system is then complete and ready for use throughout the house or office. ●

PARTS LIST

TRANSMITTER

Resistors All ¼W, 5%

R 1	470R
R 2	2k2
R 3 , 4 , 7	4k7
R 5	22k
R 6	150k
R 8	470k
R 9	18k
R 1 0	270R
R 1 1	1k8

Potentiometers

R V 1	4k7 min horiz preset
R V 2	10k log

Capacitors

C 1	1000u 25V PCB electrolytic
C 2	10n 1000V disc ceramic
C 3	1n0 polester
C 4	330n polycarbonate
C 5	10n polyester
C 6 , 9	10u 16V tantalum
C 7	1n0 ceramic
C 8	220p polystyrene
C 1 0	2u2 16V electrolytic
C 1 1	10u 16V electrolytic

Semiconductors

I C 1	78L12
I C 2	LM566CN
D 1 , 2	1N4001
D 3	1N4148
Q 1	2N2222
Q 2	MPS6521
L E D 1	0.2 in red LED

Miscellaneous

T1 12-0-12 6VA transformer, 12V 100mA bulb. TR-103 IF Transformer, Armaco 12-0-12 transformer 6VA, 12V 100 mA .

RECEIVER

Resistors All ¼W, 5%

R 1	1k8
R 2	1k2
R 3	820R
R 4	3k3
R 5	1k0
R 6	560R
R 7	390R
R 8	3k9
R 9 , 1 0	680R
R 1 1	220k
R 1 2	47k
R 1 3	2k2
R 1 4	15k
R 1 5	10k

Potentiometers

R V 1	10k min horiz preset
R V 2	220k

Capacitors

C 1	1000u 25V electrolytic
C 2	10n 250V AC ceramic
C 3	1n0 polystyrene
C 4	2u2 tantalum
C 5	150n polycarbonate
C 6	2n2 ceramic
C 7	10n polyester
C 8	68n polycarbonate
C 9	1n0 ceramic
C 1 0	10u tantalum
C 1 1 , 1 4	220p polystyrene
C 1 2	2n2 polystyrene
C 1 3	330p polystyrene
C 1 5	220n polycarbonate
C 1 6	100u 25V electrolytic
C 1 7	470u electrolytic

Semiconductors

I C 1	LM565CN
I C 2	LM78L12CZ
I C 3	LM380N
Q 1 , 2	MPS6521
D 1 , 2	1N4001
D 3 , 4 , 5 , 6	1N4148
L E D 1	any LED

Miscellaneous

12-0-12 transformer 6VA, 12V 100 mA bulb, 8 ohm loudspeaker, TR-103 IF Transformer (Armaco)

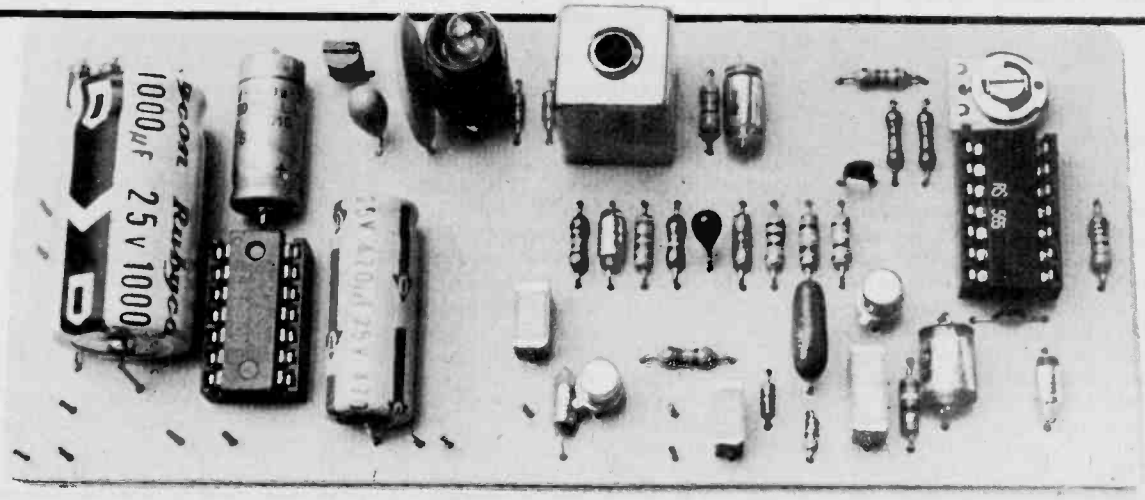

Continued on page 70

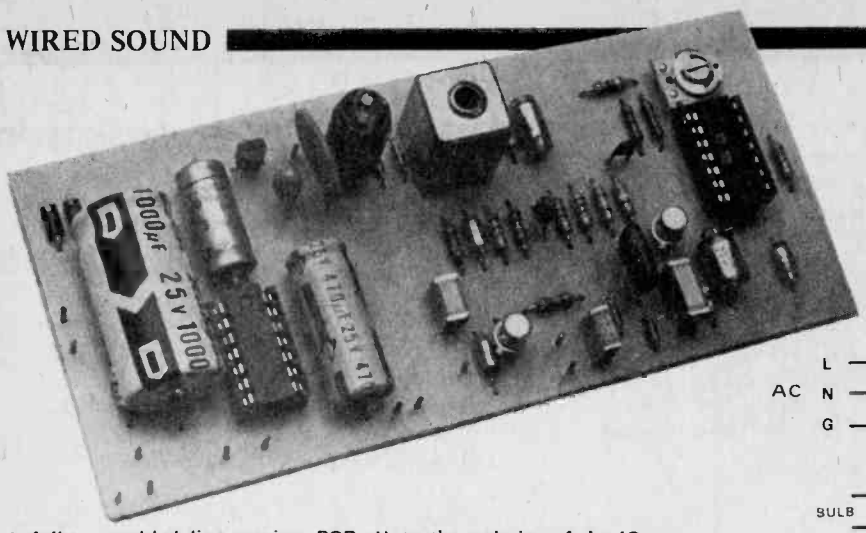

A fully assembled line receiver PCB. Note the polarity of the ICs and polarised components.

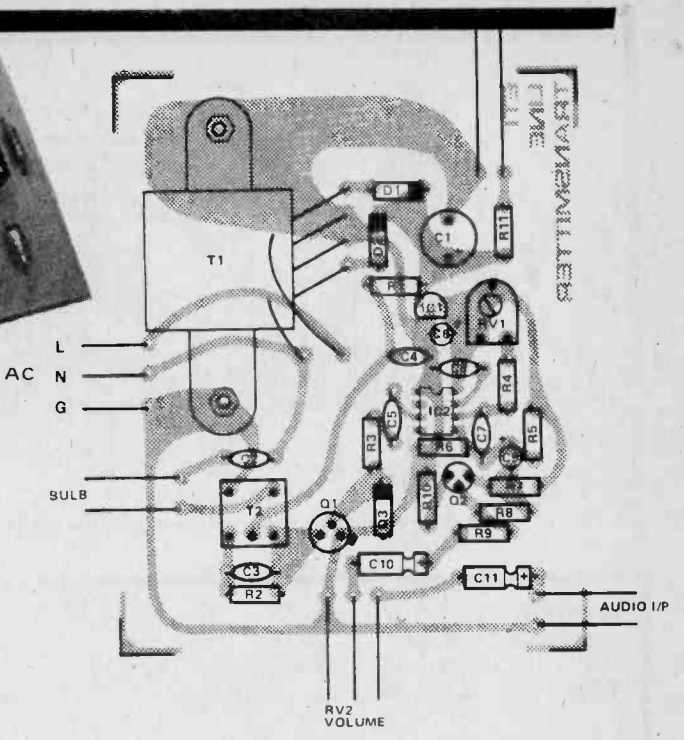

Fig. 4. Component overlay of the receiver.

HOW IT WORKS

The system is designed to transmit an audio signal to any number of remotely-located receiver/speaker units, using the AC wiring as the communication link. The transmitter produces a low-level 200 kHz carrier signal, frequency modulated by the audio signal, which it superimposes on the neutral side of the power lines. At each receiver unit, the carrier signal is picked up from the wall plug amplified, demodulated and the resulting audio signal is passed on to a speaker via a 2 watt audio amplifier IC. The use of an FM link ensures a good audio response and excellent noise rejection.

System operation relies on the fact that the AC wiring is highly inductive and acts as a fairly high impedance to a 200 kHz signal. At this frequency, the wiring can be regarded as an inductive potential divider, with the power sub-station at its 'low' end. This 'divider' normally produces relatively little signal attenuation between power points that are separated by dozens or hundreds of metres of wiring and can be used as an excellent built-in 'data link' in any home.

The Transmitter

IC2 is a voltage-controlled oscillator, or VCO. Its operating frequency is determined by the values of RV1-4 and C8 and by the voltage on pin 5. With the component values shown, the VCO operates at a centre frequency of 200 kHz and produces a square wave output at pin 3. This output is used to drive common emitter amplifier Q1, which uses a standard IF transformer (T2) as its collector load; the centre frequency of T2 is shifted to 200 kHz by C3 and its 'Q' is reduced to a fairly low value (to give a broad-band response) by R2. The output signal on T2 secondary (pins 4 and 5) has an amplitude of a few hundred mV rms.

Audio input signals to the unit are fed to volume control RV2 via C11 and then subjected to about 20 dB of amplification via Q2. The output of Q2 is used to frequency modulate the VCO via C9 and pin 5. Consequently, the output of T2 is a 200 kHz 'carrier' signal frequency modulated by the audio signal. This output is coupled into the neutral line of the AC wiring via low-value capacitor C2 and current-limiting 'fuse' LP1. Note that one side of T2 output is wired to the ground side of the line, thereby ensuring that standing DC potentials of only a few volts exist between the primary and secondary windings of the transformer. C2 and LP1 ensure that the system will not be damaged if the output signal is accidentally fed to the live, rather than the neutral, side of the line.

Q2 and IC2 are powered from a regulated supply via IC1, a 12 volt regulator.

The Receiver

The 200 kHz frequency-modulated line signal is picked up on the input of T2 via C2 and current-limiting 'fuse' LP1; D3 and D4 are used to limit the T2 signal amplitudes to a few hundred millivolts. T2 is tuned to 200 kHz via C3 and has its 'Q' reduced to a fairly low value via R4, to give a broad-band response. The isolated output signal of T2 is fed to the base of common emitter amplifier Q1 via current-limiting resistor R5.

The base of Q1 is biased to 4V5 via the R2-R3 divider network. Q1 is overdriven by the input signal and has its output clipped at about 6 volts peak-to-peak. The output of Q1 is fed to the pin 3 input terminal of IC1 via R8-C6-R9. IC1 is a phase locked loop and is used to demodulate the 200 kHz FM carrier signal. This IC contains a reference oscillator, which is set to the same centre frequency as the carrier via RV1-R13 and C11. The demodulated audio signal appears at pin 7 of IC1. C12-R14-C13-R15-C14 are used to filter out any vestiges of the carrier and the resulting 'clean' audio signal is passed on to volume control RV2 via C15. The output of the volume control is fed to 2-watt audio amplifier IC3 and is then passed on to an external eight ohm speaker via C17. Most of the circuit (other than IC3) is powered from a stabilised supply via IC2, a 12 volt regulator.

The receiver unit is provided with an automatic 'mute' facility, which kills the audio output in the absence of a carrier signal, via Q2 and its associated network. Q2 is wired across the input to the volume control and kills the audio signal when biased on. Q2 is biased from two independent sources. It is positively biased (biased on) via R11 and the R2-R3 potential divider and can also be negatively biased (biased off) from the output of Q1 via the C7-D5-D6-C8-R12 rectifier network. The values of R11 and R12 are chosen so that the negative bias is predominant and Q2 is turned off in the presence of a carrier signal in excess of about 1V5 at Q1 collector. In the absence of a suitable carrier signal the negative bias falls to a negligible value and Q2 is turned on via R11.

The automatic mute circuit can be disabled by closing SW1, in which case the phase-locked loop tries to lock on to noise signals in the absence of a carrier and consequently produces very high noise levels at the output of IC3.

ALAS!

Platonius, Thou hast missed thy chance. I hath purchas-ed the final copy of ETI from yonder squire news-stand. Thee shall miss all the verily fascinating articles, projects, features and most rightios news. 'Tis indeed a pity. Eat-eth out thine heart, turkey.

SUBSCRIBE

And you need never fear being caught running around chasing after a snooty woman in a toga.

$16.95 for one year
$29.95 for two years
Fill out the coupon and send your cheque or Visa or Mastercharge when and Expiry Date.

ELECTRONICS TODAY INTERNATIONAL
SUBSCRIPTION DEPT
UNIT 6, 25 OVERLEA BLVD.
TORONTO, ONT, M4H 1B1

GUD STUF!

ETI ORDER FORM

BACK ISSUES: Please circle issues desired.

1977	February			May			July			November	
1978	March	May	June	July	August	September	October		November		December
1979	January	February	March	April	May	June	July	August	September	October	November	December
1980	January	February	March	April	May	June	July	August		October	November	
1981	January	February	March	April	May						

QTY.	ITEM	AMOUNT
. . . . .	.Back issues @ $3 (mark choice above)	$ . . . . .
. . . . .	.Canadian Projects Book No. 1 @$3.45	$ . . . . .
. . . . .	.'More Circuits' Book @ $4.95	$ . . . . .
. . . . .	.ETI T-shirts @ $5.50	$ . . . . .
	Small ( ) Medium ( ) Large ( )	
. . . . .	.ETI Binders @ $6.75	$ . . . . .
Ontario residents add 7% PST on last three only.		$ . . . . .
. . . . .	.Subscriptions @ $16.95/$29.95	$ . . . . .
. . . . .	.Hobby Projects @ $3.95	$ . . . . .
. . . . .	.Electronic Circuit Design @ $3.95	$ . . . . .
. . . . .	.Canadian Projects Book No. 2@ $3.95	$ . . . . .

BABANI

QTY.			
. .	BP1	$2.80	$ . . . .
. .	BP14	$4.80	$ . . . .
. .	BP24	$4.25	$ . . . .
. .	BP33	$4.25	$ . . . .
. .	BP35	$5.50	$ . . . .
. .	BP37	$5.50	$ . . . .
. .	BP39	$5.50	$ . . . .
. .	BP42	$3.55	$ . . . .
. .	BP44	$7.55	$ . . . .
. .	BP46	$5.90	$ . . . .
. .	BP47	$5.90	$ . . . .
. .	BP48	$5.90	$ . . . .
. .	BP49	$6.25	$ . . . .
. .	BP50	$5.90	$ . . . .
. .	BP51	$5.50	$ . . . .
. .	BP62	$8.95	$ . . . .
. .	BP63	$8.95	$ . . . .
. .	BP64	$8.95	$ . . . .
. .	BP65	$6.55	$ . . . .
. .	BP66	$7.55	$ . . . .
. .	BP67	$7.55	$ . . . .
. .	BP68	$7.25	$ . . . .
. .	BP69	$7.55	$ . . . .
. .	BP70	$2.40	$ . . . .
. .	BP71	$7.70	$ . . . .
. .	BP72	$7.70	$ . . . .
. .	BP73	$8.58	$ . . . .
. .	BP74	$7.70	$ . . . .
. .	BP75	$7.30	$ . . . .
. .	BP76	$7.30	$ . . . .
. .	BP77	$12.30	$ . . . .
. .	BP78	$7.30	$ . . . .
. .	BP79	$7.30	$ . . . .
. .	BP80	$8.25	$ . . . .
. .	BP81	$7.30	$ . . . .
. .	BP83	$8.20	$ . . . .
	BP 84	$8.11	
	BP 85	$12.25	$ . . .*

BABANI

. .	No.223	$5.50	$ . . . .
. .	No.224	$4.25	$ . . . .
. .	No.205	$3.55	$ . . . .
. .	No.213	$4.50	$ . . . .
. .	No.215	$3.70	$ . . . .
. .	No.221	$5.50	$ . . . .

TAB

QTY.			
. .	No.800	$18.30	$ . . . .
. .	No.804	$18.35	$ . . . .
. .	No.805	$11.75	$ . . . .
. .	No.806	$11.75	$ . . . .
. .	No.841	$8.55	$ . . . .
. .	No.1167	$8.40	$ . . . .
. .	No.1216	$11.40	$ . . . .
. .	No.1015	$9.70	$ . . . .
. .	No.1064	$11.85	$ . . . .
. .	No.1070	$12.35	$ . . . .
. .	No.1071	$10.90	$ . . . .
. .	No.1133	$9.75	$ . . . .
. .	No.1241	$11.75	$ . . . .

* BABANI SUBTOTAL_____

TOTAL ENCLOSED

If we cannot complete your order, do you wish the balance refunded? YES ☐ NO ☐

PLEASE PUT YOUR NAME AND ADDRESS ON REVERSE SIDE OF THIS FORM.

SUBSCRIBE NOW!

BOOKS, BACK ISSUES BINDERS—SEE OVER

FOR OFFICE USE

Code _____

Electronics Today Magazine, Unit 6, 25 Overlea Blvd., Toronto, Ontario M4H 1B1.

SUBSCRIPTIONS: ☐ NEW SUBSCRIPTION? OR. . . ☐ RENEWAL? Please check one.

☐ One year subscription (12 issues) $16.95 ☐ Two year subscription (24 issues) $29.95

Postage and handling to Canada is included, for U.S. please add $3, other countries add $5/yr.

PLEASE PRINT CLEARLY

NAME _____

ADDRESS _____

TOWN/CITY _____ PROVINCE/STATE _____

CODE _____ DATE _____

☐ Cheque enclosed. DO NOT send cash

☐ Bill Mastercharge A/C No _____ Signature _____

☐ Bill Visa A/C No _____ Expiry Date _____

PLEASE ALLOW 6–8 WEEKS FOR YOUR FIRST MAGAZINE TO ARRIVE

0881

HAMEG Oscilloscopes

Top Performance In Every Range

HM 307

HM 307 — **$550.**
Y: Bandwidth DC-10MHz (-3dB) • Sensitivity 5mV-20V/cm (±5%)
X: Timebase 0.2s-0.2µs/cm (±5%) • Triggering 2Hz-30MHz (3mm)
Built-in component tester • Calibrator • Screen 6x6cm • 1kV

HM 312 — **$855.**
Y: Bandwidth DC-20MHz (-3dB) • Sensitivity 5mV-20V/cm (±3%)
X: Timebase 0.2s-40ns/cm incl. x5 Magn. • Trig. 3Hz-30MHz (4mm)
Dual trace • X-Y Operation • Calibrator • Screen 8x10cm • 2kV

HM 412 — **$1277.**
Y: Bandwidth DC-20MHz (-3dB) • Sensitivity 2mV-20V/cm (±3%)
X: Timebase 2s-40ns/cm incl. x5 Magn. • Trig. DC-40MHz (5mm)
Dual trace • Algebr. addition • X-Y Operation • Screen 8x10cm
Sweep delay • Overscan, Trigger, Delay indications • Trigger filter
Z-Modulation • Calibrator • Graticule illumination • 2kV

HM 512 — **$2070.**
Y: Bandwidth DC-50MHz (-3dB) • Sensitivity 5mV-50V/cm (±3%)
X: Timebase 5s-20ns/cm incl. x5 Magn. • Trig. DC-70MHz (5mm)
Dual trace • Algebr. addition • X-Y Operation • Screen 8x10cm
Delay line • Sweep delay • After delay triggering • Trigger filter
Single shot + Reset • Overscan, Trigger, Ready, Delay indications
var. Hold-off • Z-Modulation • Graticule illumination • 12kV

HM 812 — **$4630.**
Y: Bandwidth DC-50MHz (-3dB) • Sensitivity 5mV-50V/div. (±3%)
X: Timebase 5s-20ns/div. incl. x5 Magn. • Trig. DC-70MHz (0.5div.)
Dual trace analog storage with var. Persistence and Auto-Storage
Algebr. addition • X-Y Operation • Screen 8x10div. (7.2x9cm)
Delay line • Sweep delay • After delay triggering • Trigger filter
Single shot • Overscan, Trigger, Ready, Delay, AS Indications
var. Hold-off • Z-Modulation • X-Guard circuit • Calibrator • 8.5kV

HM 812 storage

BCS ELECTRONICS LIMITED

We service all makes of Oscilloscopes:
TEKTRONIX • HEWLETT-PACKARD • GOULD • ETC.
From coast to coast. Call us next time.

980 Alness St., Unit 35, Downsview, Ontario (416) 661-5585 M3J 2S2

Circle No. 42 on Reader Service Card.

INTO ELECTRONICS (Part 11)

Ian Sinclair continues his discussion of radio and also looks at disk and tape recording.

Audio Systems

The one part of a radio system we haven't dealt with yet is the audio section — the circuit that handles the audio frequencies all the way from the detector to the loudspeaker. We've left this section so far not because of any difficulty but because the circuits are so similar to those used in other audio systems, such as disc and tape

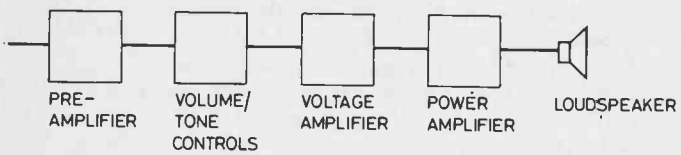

Fig. 1. Block diagram of a typical audio system.

recorders. The range of frequencies that we're talking about, the audio range, is from around 30 Hz to about 20 kHz which is the range of frequencies of sound that can be detected by a human ear in good condition. These sound frequencies, converted into electrical signals by a microphone constitute the audio frequency signals which have to be amplified and converted back into sound. The circuits of any audio system must carry out voltage amplification, the control of gain (volume control), the control of the shape of the gain/frequency graph (tone control to you), and power amplification so that a loudspeaker can be driven. A block diagram of the system looks as in Fig.1.

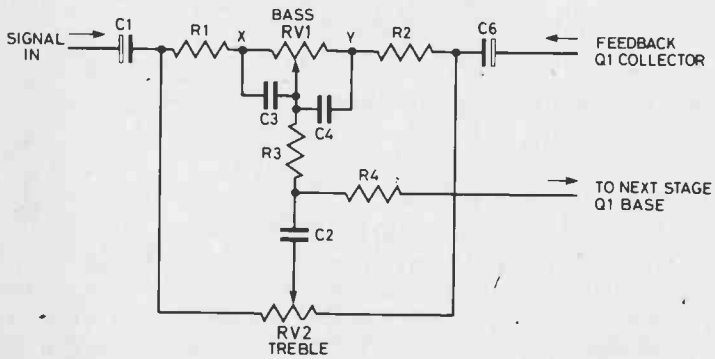

Fig. 2 Baxandall tone control circuit.

Toning Up

Voltage amplifiers are familiar by now, and the idea of amplitude control (using a potentiometer) is simple, but the tone control stages of a Hi-Fi amplifier are a bit daunting if you've never seen similar circuits before. Fig.2. shows one very popular type called a Baxandall circuit.

In this circuit, a network of resistors and capacitors is connected so that it feeds two lots of signals into the base of a transistor. One signal is the audio signal from the previous stage, the other is a feedback signal from the collector of the transistor. Now this is negative feedback which will have the effect of reducing the gain of the amplifying stage, but the amount of signal that is fed back depends on the settings of RV1 and RV2 as well as on the values of the resistors and the capacitors in the circuit. For example, if the slider of RV1 is nearer end X of the potentiometer, then the signal in through C1 and R1 can reach the base of Q1 much more easily than the signal (feedback) through C6, R2 and most of the resistance of RV1. Because of this, the easier feedback path is through C4 rather than through RV1. C4 has a rather small value, so that it will pass high and middle frequencies more easily than very low frequencies, causing bass boost. The bass is boosted because more of the higher frequencies are being fed back, so the gain of the transistor for high frequencies is less than it is for low frequencies. With the slider of RV1 at end Y, only the higher frequencies of the signal can easily reach the base of the transistor without passing all the way through RV1, so that this now acts to cut bass. RV2 has a similar action on the high (treble) frequencies, so that separate control of the two ends of the audio range can be achieved. Such elaborate control is used only for high quality sound equipment. Your 10 dollar Hong-Kong radio makes do with a 0.1u capacitor wired across the speaker.

Churning Out The Power, And Sinking It

One part of an audio system that we haven't spent much time on is the power output stage. Power output is needed because loudspeakers convert electrical power into audio (sound) power, so that electrical power in the form of a signal with enough voltage and current amplitude must be supplied. Loudspeakers are inefficient devices, converting less than 1% of the electrical power into sound, so that a fair amount of electrical power is needed. A power output transistor therefore has much larger current passing through it than we ever use in a voltage amplifier transistor, and because loudspeakers are damaged by direct current flowing through them, we have to couple the signals to the loudspeaker by a transformer or a capacitor. One exception to that last rule is that the DC can be balanced out in a type of output circuit called a bridge circuit, but these are rare.

Fig. 7. shows a single-ended output stage which uses one transistor with a transformer as its collector load. The term single-ended just means that the signal is

not shared with any other transistors — you'll see circuits later which do share the signal and are not single-ended. The bias of the transistor is set so that a current of about 0.5 A flows when no signal is applied, and the full amplitude of signal at the input will cause the collector current to swing between 1.0 A and zero

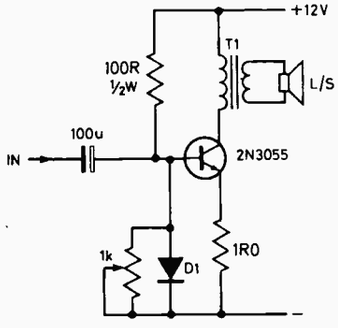

Fig. 3. A single-ended output stage.

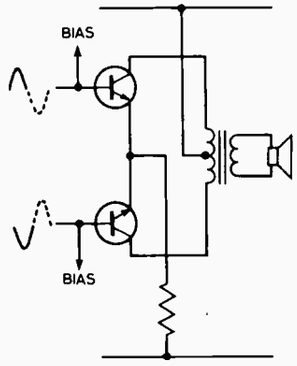

Fig. 4. A push-pull output stage.

current at the peaks. The voltage at the collector is about supply voltage (12 V) with no signal, and the *average* voltage does not change when a signal is applied, so that with a full-amplitude signal the voltage swings down to zero volts (at the peak of current) and up to 24 V (at zero current). The peak voltage signal is therefore 12 V, the peak current signal is 0.5 A, the peak power is 12 x 0.5 = 6W, and the average power is half of this, 3 W.

This type of single-ended output stage (a Class A stage). is wasteful of power and is used mainly in the type of line operated equipment where high quality sound is not important (the TV, boy, the TV. If they're gawking at the picture, they're not listening to the sound). Most output stages make use of the push-pull, or double-ended principle, in which two transistors share the output signal between them. These push-pull circuits can also be operated with a large steady current (Class

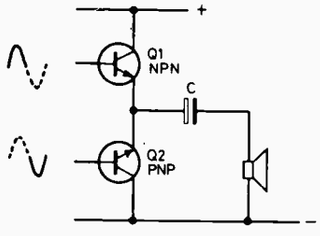

Fig. 5. A fully complementary output stage.

A), but most designs make good use of both transistors by running each transistor with very little bias current, so saving power. The most popular circuit of this type is the totem-pole circuit,, breifly referred to in Part 5 (Fig. 11). Let's look over that circuit again. In its simplest (and best) form, it uses one PNP and one NPN transistor connected as a pair of emitter followers, feeding the loudspeaker through a capacitor. With no signal input, the circuit is biased so that the voltage at the emitters is equal to half of the supply voltage. When the same signal input is taken to the bases of the two transistors, the positive half of the signal will cause Q1 to conduct (with Q2 biased off because Q2 is a PNP type). The voltage at the emitters will follow the shape of the positive half of the signal waveform, since Q1 is an emitter follower. The negative half of the waveform will shut off Q1 and make Q2 (PNP, remember) conduct so that the voltage at the emitters now follows the waveshape of the negative half of the wave. At the loudspeaker, the complete waveform is used. Because of the coupling capacitor, the waveform at the loudspeaker has an average value of zero; there is no DC level.

Fig. 6. shows a more complete output stage of this type. RV2 along with the diodes D1 and D2 provides some bias, so that the base of Q2 is at a higher voltage than the base of Q3. If both basses were at the same steady bias voltage, then signal voltages between V/2 —0.5 and V/2 + 0.5 would not produce any output, because a transistor does not conduct until its base voltage is about 0.5 V higher than its emitter voltage (negative to emitter voltage for the PNP type). Even when some bias is applied, the waveform output for very small signals is never quite perfect because the two transistors never match each other perfectly enough. This type of distortion is called 'cross-over distortion.' RV2 acts to adjust the bias current flowing in the output transistors, and can be set so that the cross-over distortion is as low as it can be for a

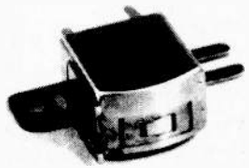

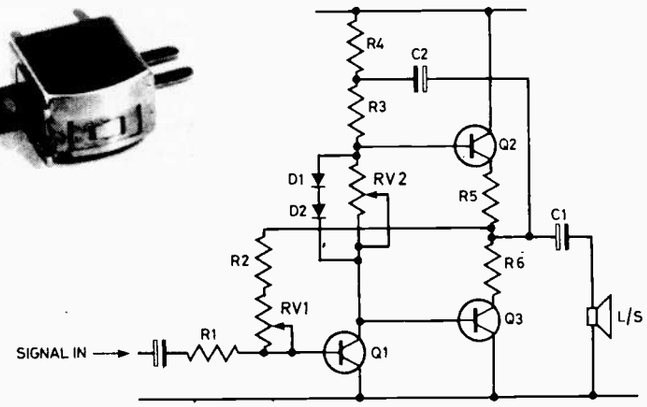

Fig. 6. A more complete version of the 'totem pole' output stage. given in Part 5.

given pair of transistors. RV1, along with R2 provides negative feedback of bias voltage and of signal. Because the output stage (which we can think of as a single emitter follower) is directly coupled, adjusting RV1 sets the voltage at the emitters of the output transistors. In use, RV1 is set to make the DC voltage at the join of R5, R6 equal to about half supply voltage. A more accurate method of setting is to connect in a signal whose amplitude is large enough to cause each peak of the output signal to appear flattened. RV1 is then adjusted so that both peaks are flattened symmetrically (Fig. 7c.) The amplifiers is now set so that it can handle the maximum amplitude of the input signal.

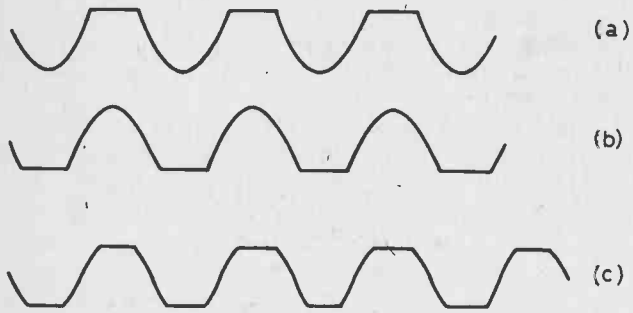

Fig. 7. Using a large amplitude wave to set an amplifier for max. input signal.

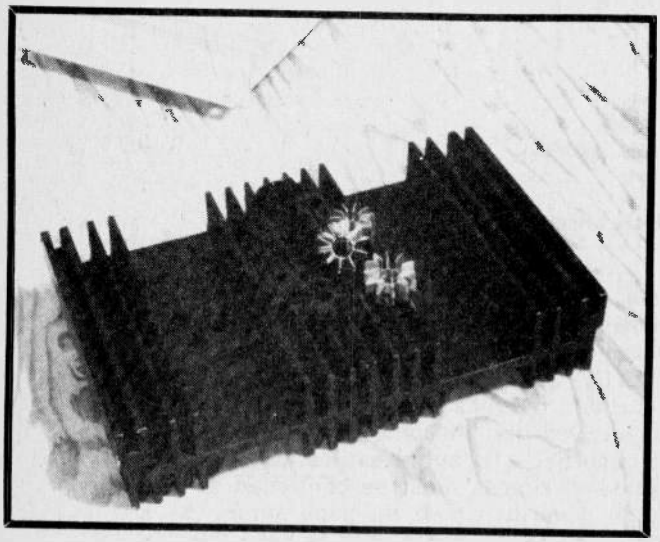

Fig. 8. Typical transistor heat sinks.

C2 is a 'bootstrapping' capacitor whose job is to assist Q1 to drive the bases of the two output transistors. When a signal of near maximum amplitude is being handled, there would not be enough voltage across R3 (which has a small value) to pass base current into Q2 unless we could increase the voltage of the supply. The positive feedback signal through C2 does just that at each peak, and also helps to avoid signal losses. There's no risk of oscillation, because the voltage gain of Q2 is less than unity.

Fig. 9. Block diagram of a record player.

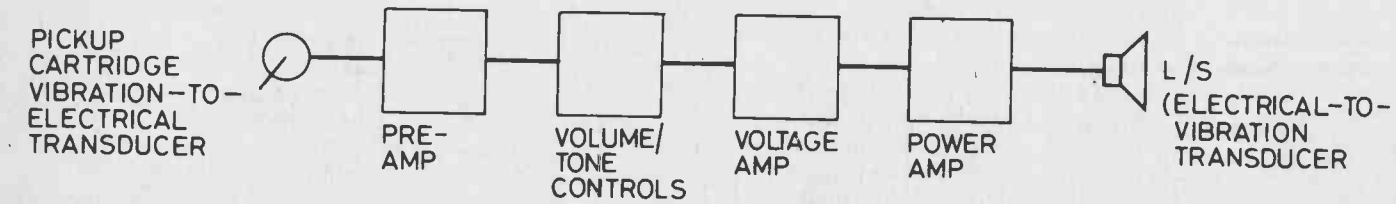

Frying Tonight

Before we leave output stages, though, there's one important point about all of them. Output stages use transistors which can pass quite large currents at fairly high voltages, compared to most voltage amplifiers. The result is that power is dissipated in the transistors, and inevitably this means that the transistors will get hot. Unless we can pass on this heat, the temperature of the output transistors will increase until the collector-base junction, which is the part that has to dissipate the power, fails. There aren't many water-cooled transistors around (yet), so that the heat has to be passed on to the air, using convecting fins called heatsinks. These heatsinks (Fig. 8.) are chunks of metal, finned and blackened, to which power transistors are tightly bolted, usually with a layer of heat-conducting silicone grease to help make good contact. The metal chassis of an amplifier is often used as the heatsink, and because the cases of power transistors are connected to their collectors electrically, mica washers have to be used as electrical insulators between the transistors and the metal chassis. This prevents the transistor collectors from shorting to the chassis or to each other.

Disc

The block diagram of a record player is shown in Fig. 9. All of the transistor stages should now be familiar to you, but the transducer is not and a brief look at it is worthwhile. Most discs nowadays are stereo, meaning that two separate recordings are made on the same track. We could, if we liked, record quite different sounds on the two channels, as they are called, but we use stereo recordings mainly for the pleasing effect of having sound appear to be coming from a larger source than one small loudspeaker. Stereo recording uses two microphones, and inevitably the sounds reaching these microphones will not be identical. The aim of stereo is finally played back through two loudspeakers. The channels are labelled L (left and R (guess).

On a disc, a cycle of sound wave is recorded as a wave pattern cut into the plastic material of the disc. When stereo recording is used, the waves on one side of the groove, which has a V-shape, will not be the same as the waves on the other side, because each side of the groove carries the recording of one of the stereo channels. The groove angle is 90°, so that the pickup cartridge must include two transducers set at 90° if it is to convert the shape of the disc groove into two separate electrical signals. The use of a 90° angle makes it easy to keep the channels separate (to avoid cross-talk, as they say).

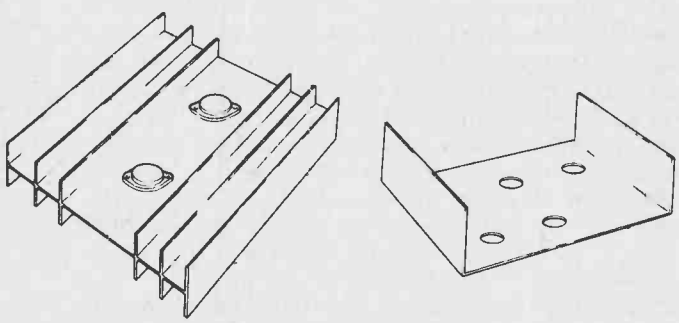

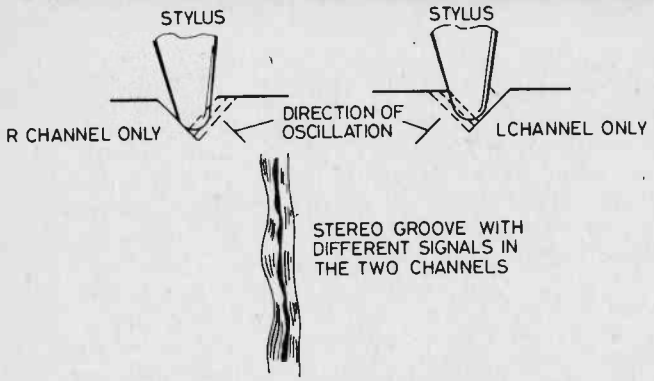

Fig. 10. Recovery of left and right channels form a single groove in a stereo disc.

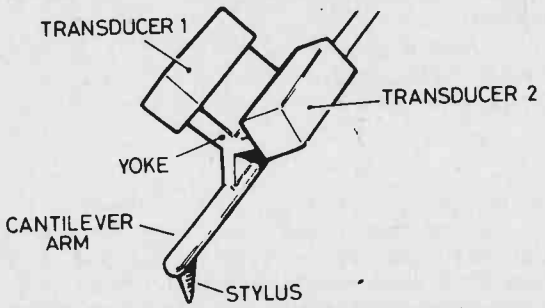

Fig. 11. Transferring stylus movement to transducers using a 'yoke'

Earnest students of Mechanics will tell you that a force has no components at 90° to its line of motion. Well, it works, anyhow.

The movement of the stylus has to be transferred to the transducers by using a yoke (Fig. 11.) and for high quality replay, the mass of each of these moving parts must be very low. The stylus has to be able to return to its normal central position after each wave, so that some sort of return spring is needed, but for good reproduction this 'spring-back' must be as low as possible. In the language of the cartridge designer, the compliance must be high. The rms signal from most cartridges of the Hi-Fi type is around 2 mV at full belt.

Tape

The disc player as we know it just evolved out of the primitive gramophones of the last century, and has changed from being a purely mechanical gadget into a mainly electronic system. Magnetic recording (tape or cassette) is just as ancient, and has adapted more readily to electronic methods, because it needed electronic methods from the start. Stereo is easier to provide on tape, because we can record several tracks on one tape using as a transducer for each channel a tiny electromagnet, the recording head.

The principles of magnetic recording are shown in Fig. 12. A signal current passes through the eletromagnet, so that a varying magnetic field exists at the gap in the head. The magnetic material, nowadays always a plastic tape coated with iron or chromium oxides, is pulled past the gap at a steady speed. Each piece of tape is left magnetised, and the amount of magnetisation is proportional to the amplitude of the signal current in the head at the instant when the tape was in the gap. When the same tape is run at the same speed past another head (or the same head with different connections to the coil) the changing magnetism at the head (caused by the combination of the magnetisation *and* the movement) induces voltage signals in the coil of the replay head. These signals, a millivolt or so in amplitude, can then be amplified. Block diagrams of a tape recorder system, both for recording and for replay, are shown in Fig.13.

One awkward complication is the way that magnetic material behaves. Small current signals through a recording head leave no magnetic signal on the tape, large signals can cause the magnetic material to 'satu-

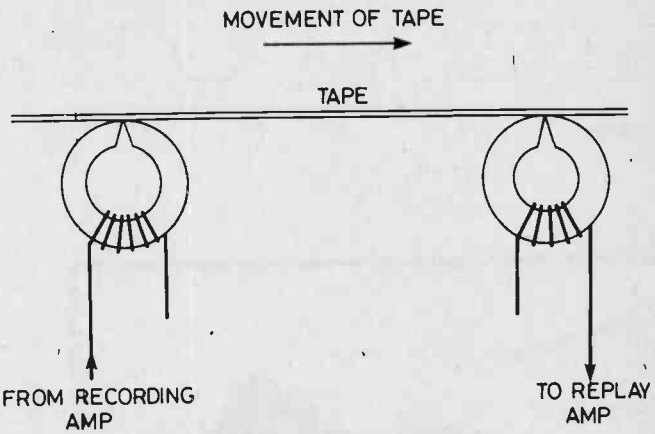

Fig.12. The principle of tape recording.

rate' so that the waveform is clipped (Fig. 14.) To overcome the small-signal problem, we add, while recording, a small signal at a high frequency, around 80 to 100 kHz, which is much too high to hear on replay. This is called the bias signal, and it is the bias signal which ensures that the tape always has some signal being recorded. To avoid saturation problems, the amplitude of signals must be controlled so as not to reach the level at which the tape saturates, so that meters or AGC circuits are used to keep the recording level below the saturation point.

What makes tape so difficult to use satisfactorily is that the amount of bias and the saturation level is different for each tape, and the amount of bias that is needed for any particular machine varies from one brand of tape to another. Adjustments to recorders can be made only if very specialised instruments are available, and very few laboratories have these instruments, so that the type of tape recommended by the maker of a tape recorder should adhered to.

Fig. 13. Block diagram of a record/ replay tape recorder system.

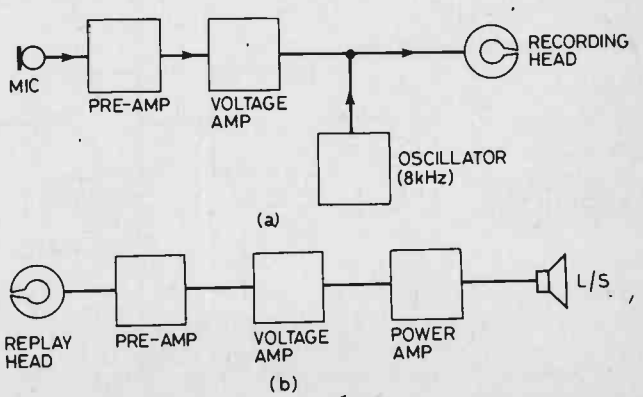

Two-Headed Radio

One final problem — how do we transmit stereo signals by radio? One answer would be to use two different frequencies for the two channels, but that isn't very satisfactory — it uses up too many frequencies, and the unfortunate listener with a mono radio will hear only the

Fig. 14. The use of a bias signal to overcome the small-signal problem.

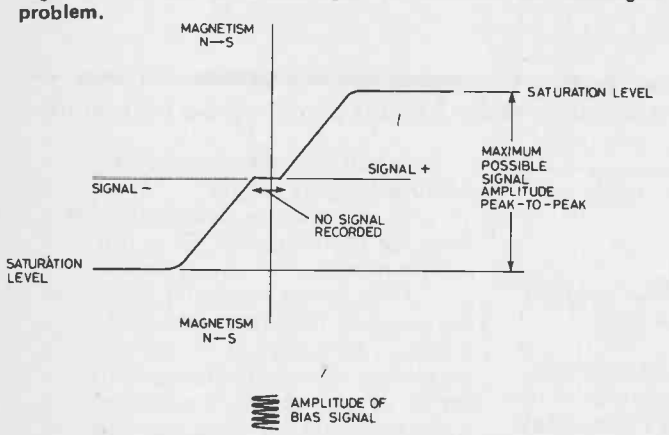

left channel *or* the right channel. The way out of this problem, is to mix the L and R signals to form L+R and L—R. Now the L+R signal is the normal mono signal which listeners with no stereo equipment will normally receive, and the L—R signal, the difference signal will allow a stereo receiver to recover the two separate R and L signals. How do we transmit them? Well, the (L—R) signal is amplitude modulated on to a low frequency carrier (called a subcarrier) at 38 kHz, and most of the carrier signal is then filtered out, leaving only the modulated sidebands (for more on sidebands, see the next part). The (L + R) signal, with frequencies up to about 14 kHz is added in, and a small-amplitude 19 kHz sine wave added. We now have a signal which consists of three parts at quite different frequencies, easy to separate, and the whole of this signal is now frequency modulated on to a carrier at around 90 MHz.

A mono receiver will demodulate the signal, but will filter out all the parts whose frequencies are above 14

Fig. 15. Block diagram of a stereo radio transmitter.

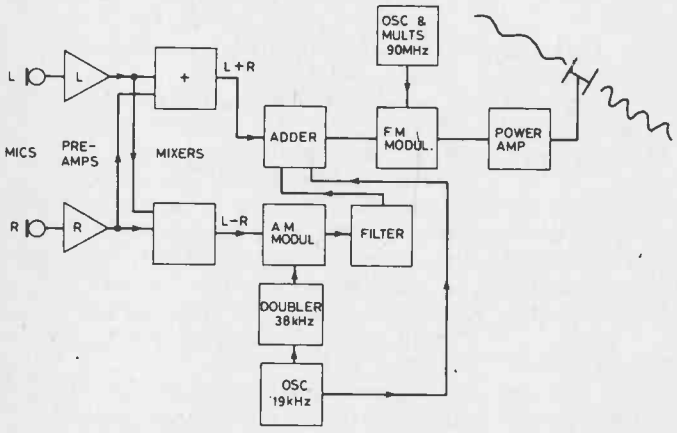

kHz, so that only the (L+R) signal is received. A stereo receiver (Fig. 16.) is much more complicated. The mono (L+R) signal is filtered off in one circuit, the 19 kHz sine wave in another, and the sidebands of the (L—R) modulation in a third. The 19 kHz sinewave is used to generate a 38 kHz carrier (using a frequency multiplier circuit) which is then added to the (L—R) modulation. This lot can now be demodulated using a simple diode detector, so that we have the L—R signal. Now the signals are combined. If we add the signals: (L+R)+(L—R), we get 2L, a left channel signal. If we invert one signal and then add: (L+R)—(L—R), the result is 2R, a right channel signal. This operation, called matricing, recovers the original L and R signals which can then be separately amplified. A set of filter circuits is used to remove traces of the 19 kHz and 38 kHz signals which would otherwise cause bother with tape recorders, since they can beat (remember) with the tape bias sinewave. ●

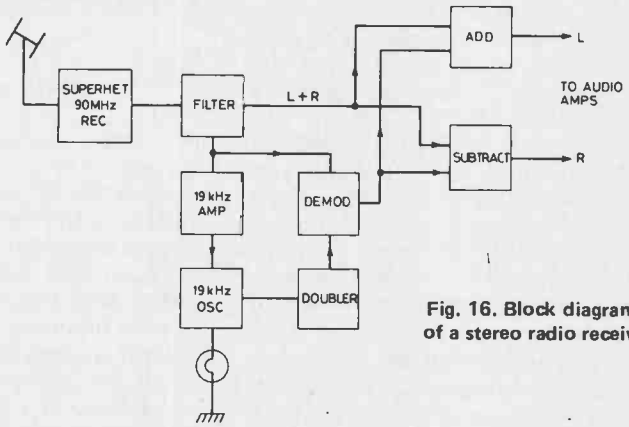

Fig. 16. Block diagram of a stereo radio receiver.

DOUBLE★DOLLAR★PAKS

★★★★★★★★★★★★★★★★★★★★★★

QUANTITY IN THIS PAK 18
DD-480 JUMBO 5mm RED LED $2.00

QUANTITY IN THIS PAK 6
1A 125 VAC SPST On-Off Push on momentary
DD-121 $2.00

QUANTITY IN THIS PAK 2
DD-8 MINIATURE TRANSFORMERS 1.2K/8 OHM $2.00

QUANTITY IN THIS PAK 3
RED NEON LAMP 120VAC Built in resistor 3/8" (10 mm) panel hole. Overall length 1-13/16" (46 mm)
DD-30 $2.00

QUANTITY IN THIS PAK 2
MINI MINI SWITCH SPST 3A 125VAC
DD-122 $2.00

QUANTITY IN THIS PAK 20
1N4003 DIODE 1A 200V PIV
DD-520 $2.00

Send $2.00 for our giant 50 page catalogue containing more than 600 "DOUBLE DOLLAR PAKS" listings. Fantastic savings on switches, semi-conductors, capacitors, and much, much more.

"DOUBLE DOLLAR PAKS"
P.O. Box 2068
Bramalea, Ontario
L6T 3S3

add $2.00 for shipping & handling
C.O.D. orders $2.00 additional
Ontario residents add 7% sales tax
Mastercharge, Visa, Money Orders
DO NOT SEND CASH
be sure to sign your order

Circle No. 20 on Reader Service Card.

AUDIO TODAY

If your tone arm is on the dust cover of your stereo, something is wrong. Wally Parsons considers the permutations.

IF YOU WERE wandering through these fields last month, you may have come away feeling confident that you can now set up any pickup arm correctly. All that is necessary is to take the appropriate equations, plug the right numbers in, and read off the right answers on the LCD. In any case, matters are certainly simplified by the fact that for any given arm length there is a single correct amount of overhang, and a single correct degree of offset, right?

Well, actually, nothing is ever simple, except perhaps the mind of a voter who believes politicians' election promises. Unlike the aforementioned politicians, numbers don't lie, but they are very specific as to their answers. Consequently, we must be very careful to be sure that we understand the question to which the answer applies.

Consider, for example, the formulae given last month for determining the correct arm geometry for minimum tracking error. Mathematicians in the audience, as well as others who get a kick out of spending an evening pushing calculator buttons may have discovered some shades of grey between the blacks and whites.

But, first, for the sake of new members of and visitors to the Audio Today Show and Tell Club, as well as those whose pages may have faded during the interval, let's recapitulate those equations.

L = arm length, from pivot to stylus tip

D = stylus overhang, as illustrated in fig. 1

$\emptyset$ = tracking angle, as illustrated in fig. 1

B = pickup offset angle

r = groove spiral radius

r_1 = innermost groove spiral radius of interest

r_2 = outermost groove spiral radius of interest

To find tracking angle,

$$\emptyset = 57.3[(r/2L) + (D/r)] \text{ degrees}$$

To find overhand, D

$$D = \frac{r_2^2}{L[\frac{1}{4}(1 + r_1/r_2)^2 + r_1/r_2]}$$

and offset angle B is

$$B = \frac{57.3r_1\,(1 + r_1/r_2)}{L[\frac{1}{4}(1 + r_1/r_2)^2 + r_1/r_2]} \text{ degrees}$$

Now, if that array of alphabet soup hasn't been chewed up somewhere in the Twilight Zone that lies 'twix the typewriter and the printing press certain facts can be gleaned from their examination. As a matter of fact, you can even draw some pretty pictures, such as fig 2. (so alright, already, Geiger it ain't; he can draw his pictures on his page, I'll draw mine on mine.)

Fig. 1. Tracking angle.

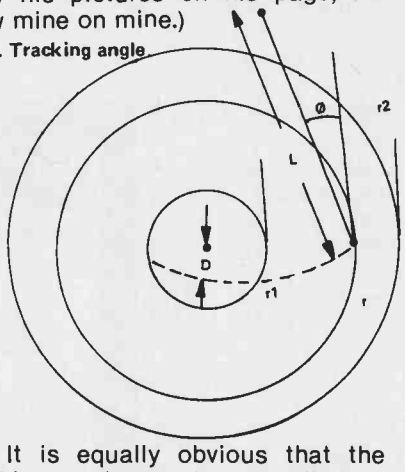

It is equally obvious that the tracking angle can be cancelled by off-setting the pickup by an amount equal to the tracking angle. However, that correction only holds at one radius.

It is equally obvious that the tracking angle can be cancelled by offsetting the pickup by an amount equal to the tracking angle. However, that correction only holds at one radius.

As a matter of fact, the only condition zero tracking error can be achieved with a pivoted arm is one in which the arm is of infinite length, in which case the required offset is zero.

If anyone is sceptical of the above statement, he has only to solve Eq 1, 2, and 3, using X as the value for L.

He will discover that zero error is achieved at any radius.

He will also be awarded a Nobel prize for mathematics. Or a trip to a rubber room.

If the arm is overhung, the tracking angle is increased. However, solving Eq. 1 for a variety of radii yields a graph like one of the curves shown in fig 2. Under these conditions, the tracking angle for the inner grooves increases more than the angle for the outer radii. As a matter of fact, as radius increases the curve for the overhung condition and zero overhang condition converge, until until at a radius of infinity they meet.

At the other end of absurdity, as the groove radius becomes smaller the tracking angle increases, until, at a radius equal to the overhang it reaches 90°.

Fortunately, no one makes records with such a range of groove radii.

How Everything Works Together

I never cease to wonder at the way nature arranges things so that they work with each other.

Wheels, for example. Isn't it fortunate that wheels are round. Makes it so much easier to put tires on them.

And hands. Having four fingers and a thumb makes for a nice fit with gloves, don't you think.

Another fortunate coincidence is the fact that it is possible to obtain acceptable performance at a record groove radius of only 2.5" and a maximum of 5.75". As it happens, practically any arm long enough to be mounted on the outside of a record of any diameter can be set up with sufficient overhang to provide almost constant tracking angle at any useable radius.

Take, for example, an arm with a length L = 9" mounted with an overhang of 0.73" as per Eq 2. At a radius of 5.75" the tracking angle will be 25.6° and at 2.5" it will be 24.7°. At 3.5" the tracking angle will be 23.1°. Maximum variation is 2.5°. If a pickup is mounted with an off-set of 24.35°,

the resulting angle will be zero at approximately 3.25" and 4.4". This amount of off-set is extrapolated from the co-ordinates used to draw fig 2, and were calculated at intervals of 0.5". They come close to agreement with the recommended off-set calculated using Eq. 3, that is, 24.0°.

Notice that, through the radius range of interest the curve is substantially horizontal. If a larger range of radii is to be accommodated, Eq. 2 will prescribe a lesser amount of off-set. As a result, the sharp upward turn of the curve will be moved to the smaller radii, and the curve representing the outer radii will slope downward more steeply. The overall range of tracking angles will be greater, but will still show a substantially horizontal attitude throughout the middle range of radii.

The Offset

Once we have established the required overhang, it is necessary to determine the off-set angle of the pickup. The purpose of Eq. 1 was to allow us to examine the behaviour of the arm. Eq. 2 is used to establish the amount of overhang which will give the smallest range of tracking angles over the radii of interest. Eq. 3 can now be used to determine what angle of offset will correspond most closely with the tracking angles resulting from application of Eq. 2. If this off-set corresponds to any angle within the range used for calculation, other than the single minimum angle, there will be another radius at which off-set and tracking angle will agree, resulting in zero error. If we were to select the minimum radius as the point of agreement, we would also find a corresponding point near the outermost radius. In the case of our 9" arm this would result in an error of approximately 1.75° in the mid-band, and 0.5° at the outer radius. Use of Eq. 3 provides for zero error at two more closely spaced points in the middle radii and less overall error.

Whither Perfection

We have now achieved minimum tracking error. But is this really what we want? Why do we want minimum tracking error in the first place? We want it because minimizing tracking error minimizes distortion.

However, the amount of distortion generated by tracking error is dependent on many factors, one of which is groove velocity. As a result, for a given level of distortion, less error is allowable in the inner grooves that the outer grooves. It would appear, then, that we should aim for zero error at the innermost groove with an increase at the outer groove.

The catch here is that, while the latter radius is constant the former varies from record to record. A casual perusal of randomly selected discs from my own library showed that, while a great many were recorded with inner diameters of 2.5", many did not utilize that much of the disc area, with some having inner diameters of over 3". It may well be, then, that it is better to minimize error over those radii which are universally encountered, and allow some relation with respect to extreme inner grooves.

Special Applications

Just because the standard range of radii is 2.5" to 5.75" it doesn't necessarily follow that you have to set up an arm accordingly. If you collect older recordings and wish to tape them with maximum fidelity, it may be worth your while to set up an arm for a specific application. For example, 45's have a range of about 2" to 3", and can benefit from less offset and overhang.

Arm Length

Many people assume that a longer arm exhibits less tracking error because the tracking angle and range of variations is less with a long arm than with a short. While this is theoretically true, in practice it's of little consequence. This is illustrated in fig. 3 in which our above mentioned arm is compared with an arm of 12", both optimally overhung. Although the absolute values of tracking angles are substantially different the shap of the curves show less variation that a small change in overhang as shown in fig. 1.

As a matter of fact, an arm 24" long shows no more than a 20° improvement.

Indeed, moving the pickup back and forth in the head shell, an easy matter with some components, and rotating it slightly in its mount can effect substantial changes in tracking error.

Obviously, great precision must be exercised in pickup and arm mounting. It would be kind of nice to have some visual means of checking accuracy.

Many modern arms mount the pickup by means of screws which pass through the top of the headshell. By mounting a gauge as shown in fig. 4, it is possible to check for error. The front edge of the gauge is mounted parallel to the mounting screws, either using the screws, or with tape or rubber cement. The front edge is set exactly over the stylus location, and the gauge length is at least 6", long enough to reach the centre spindle. At any point of zero tracking error, the front edge of the gauge will pass over the centre of the spindle.

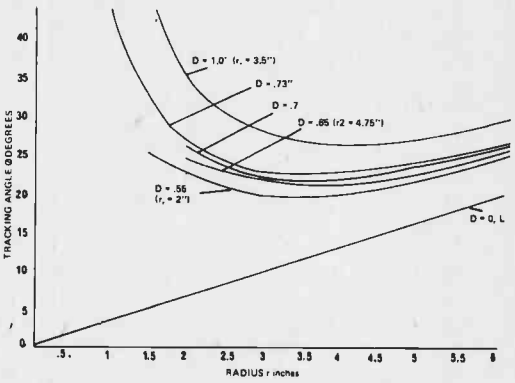

Fig. 2.

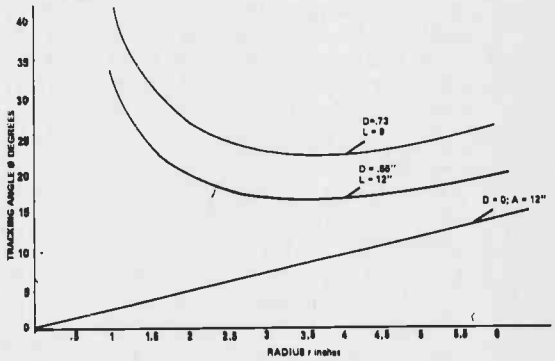

Fig. 3.

If you wish to experiment with angles and overhang, try attaching the gauge to a Dust Bug type of record cleaner, and experimenting with it.

Most educational.

**Note that Eq. 1 is slightly simplified and is accurate for use within the radii of interest. However, it cannot be used to prove this statement because the errors introduced by the approximations become gross. The equation to use, which can be used in place of Eq. 1 in all cases is:*

$$\emptyset = \arcsin[(r^2 + 2LD - D^2)/2rL], \text{ radians.} \quad \text{(Eq. 1a)}$$

Eq. 1 ignores D^2 and assumes the sine of the angle to be equal to the angle. Thus, it can be worked without a calculator or set of tables without significant sacrifice of accuracy.

Continued on page 69

CLASSIFIED ADVERTISING

ETI's classified advertising section allows you to reach 30,000 Canadian readers nation-wide for 75¢ per word. For as little as $15 per insertion (there's a 20 word minimum) you can promote your business from coast-to-coast.

WHAT DO YOU DO?
Send us your typewritten or clearly printed words, your permanent address and telephone number, and your money (no cash please). Make your cheque or money order payable to 'ETI Magazine', We're at Unit 6, 25 Overlea Blvd., Toronto, Ontario. M4H 1B1

WHAT DO WE DO?
We typeset your words (and put the first word and your company name in BOLD capital letters). If we get your message by the 14th of the month, it will appear in ETI 1½ months later. For example if we receive it by October 14th you (and thousands more) will see it in the December issue.

BURGLAR/FIRE alarms. Economical! Install yourself. Protect your home/business today! Send 50¢ for information. **MULTISYSTEMS,** Dept ETI, Box 80331, Baton Rouge, Louisiana 70898.

J&J ELECTRONICS Ltd., P.O. Box 1437E, Winnipeg, Manitoba R3C 2Z4. Surplus Semiconductor Specialists. Do you get our bargain flyer? Send $1.00 to receive the current literature and specials and to be placed on the mailing list for future pulications.

PCB as low as 15¢ sq-in FREE DRILLING **INTERNATIONAL ENTERPRISE,** 6452 Hazel Circle, Simi Valley, CA. 93063.

SAVE 90% build your own micro or minicomputer. Free details. **DIGATEK CORPORATION,** Suite P, 2723 West Butler Drive, Phoenix, AZ 85021.

COMPLETE Electronic Hobby Services. Custom kits, circuits, technical writing, special parts, original designs. Free information. **TEKNIKIT ASSOCIATES** 301 Flora Street, Carleton Place, Ontario K7C 3M8.

SPECIAL No. 1: Approximately 1000 electronics parts: capacitor — resistor — relay — switch — etc, etc, for $10. Special No. 2: Assortment of 50 tantalum capacitors 1 uf to 100 uf.(6 to 35 VDC) for $10. Special No. 3: 500 assorted Disc. ceramic capacitors for $10. All new and first quality parts with unconditional money-back guarantee. Free flyer and sample on request. **SURPLUS ELECTRO QUEBEC,** 2264 Montee Gagnon, Blainville, Quebec, Canada J7E 4H5.

FREE FLYER describes books including bootleggers bible on CB modification, CB repair, linear amplifier planbook. Kits, crystals, frequency expanders, microwave, TV antennas, cable TV, converters/inverters. Full catalogue $1.00 refundable. **AP SYSTEMS** P.O. Box 263 ETI, Newport, RI 02840. 401-846-5627.

WSI RADIO – SWL Radios – Ham radios 18 Sheldon Avenue North, Kitchener, Ontario N2H 3M2. Tel. (519) 579-0536. Write for giant catalogue, free of course!! (VE3EHC).

MEDICAL electronics technology — home study — trouble shoot medical instruments. **MDC — ET,** P.O. Box 124, Pinedale, CA. 93650.

CORONET ELECTRONICS, 649A Notre Dame W., Montreal, Que. H3C 1H8, Catalogue IC's, Semi's, Parts, send 50¢ to cover postage. Monthly specials at crazy prices.

SATELLITE ANTENNA MANUAL to build a 12 foot, screened, all-aluminum, parabolic antenna with polar mount. Plans $30. **SA ELECTRONICS,** Box 277, South Milwaukee, Wisconsin 53172 USA.

We serve you no matter how small your order may be. **SPECTRUM ELECTRONICS** printed circuit boards. P.O. Box 4166, Station D, Hamilton, Ontario, L8V 4L5.

QUALITY KITS now available — Pre-amp, Power Amp., Equalizer, Digital Clock, Power Supply, Audio LED Level Display, Cabinet, Capacitor Meter, Speaker Protector,Mosquito Repeller etc. at competitive prices. Write for FREE CATALOGUE or visit 11:00 — 6:00 Monday, Tuesday, Thusday 11:00 - 9:00 Friday & Saturday. **NEWTRONICS ENG. INC.** 208 Spadina Ave., Suite 110, Toronto, Ont. M5T 2W3 Tel. 368-8994.

SUBSCRIPTION TELEVISION Education Manual! Two scrambling/decoding methods with detailed circuits: $14.95. Microwave Television Education Manual: $16.25. Information Package: $2.00. U.S.A. funds please! **ABEX,** P.O. BOX 26601, Dept ETI, San Francisco, CA., USA 94126.

Z80 Multiflex Computer for sale. Assembled, tested, barely used. $300. **Keith Sharman,** 42 Rossmere Close SE, Medicine Hat, Alberta T1B 2J8 1-403-527-2565.

LOW-PRICED, high quality, Printed Circuit Boards. Glass epoxy, drilled, tinned, guaranteed. Most ETI boards available. Custom boards from your artwork. 8080/85/Z80 hardware and software design capability. Send 17¢ stamp for flyer. **KSK ASSOCIATES,** P.O. Box 54, Morriston, Ontario N0B 2C0.

STEEL CITY SURPLUS. Hamilton's new surplus store now open. Bargains in electronic surplus for the hobbyist, manufacturer and educator. Visit us while in Hamilton. 212 King William Street (at Ferguson) Hamilton. (416) 526-8551.

ETI PROJECTS BOARDS — Hobby quality, comprehensive stock, glass epoxy, drilled, plated, economical — Dealers wanted. Write **DACOR LIMITED,** P.O. Box 683, Station Q, Toronto, Canada, M4T 2N5.

DACOR MODULA T.M. — New structural electronic cabinetry — for experimenters, designers, prototypers and hobbiests. Dealers wanted. Write **DACOR LIMITED,** P.O. Box 683, StationQ,Toron-to, Canada, M4T 2N5.

MORE CHANNELS. Unique device ends adjacent channel interference on your TV set. Allows your ordinary set to separate all channels completely. Makes new programs available. Complete plans, $5.00. **RELTRON,** Box 91103-E, Cleveland, OH. 44101.

NEW STORE! Hobbyist. Parts. Speakers. Kits. Equipment. **GENERAL ELECTRONICS,** 5511 Yonge St., Willowdale, Ont. M2N 5S3, 221-6174. Please write for free catalogue. Monday, Tuesday, Saturday: 10:00AM – 6:00 PM Wednesday, Thursday, Friday: 10:00 AM – 8:00 PM.

K-W SURPLUS. Electronic and surplus of every kind. Retail and wholesale. Quantity users and dealers write, phone or visit for more details on our wholesale parts and pricing. 327 Breithaupt Street, Kitchener, Ontario N2H 5H6 (519) 745-2661.

RESISTORS ½W carbon film 5%. 1000/Box. Send for list of values available. We purchased entire factory closeout. Factory fresh, exceptional value at $4.00/m. Minimum purchase 1000/value. Minimum order $24.00. **RESISTORS** 1670-D Greenport Ave., Rowland Hgts., Calif. 91748.

SEMIS & KITS MJ15003, 15004 $10 per pair/ 250W class A amplifier kit $239.95/ 160W $149.00/ 140W $84.95/ 60W $60.00. Send $1.00 for our catalogue. Add 5% for shipping **KITSTRONIC INTERNATIONAL,** Box 577,Station J, Toronto M4J 4Z2.

OHIO SCIENTIFIC Software for Superboard/Challengers. From the author of "Time Trek". Send for your free catalog. **PRETZELLAND SOFTWARE,** 2005 Whittaker Lane, Ypsilanti, MI. 48197, USA.

DIGITAL CAPACITOR CHECKER — 1% accuracy, $99.50. Write **DACOR LIMITED,** P.O. Box 683, Station Q, Toronto, Canada, M4T 2N5.

CA QUALITY KITS:

– Parametric Equalizer
– Dynamic Bias super Class-A amplifiers Both transistor and FET types
– Electronic speaker protector
– Colourful LED VU and power meters
– Adjustable regulated power supply
– FM wireless transmitter
– Touch, sound or light activated switch
– Transistor tester and digital clocks
– Unique electronic roulette with sound
– Heatsinks and cabinets

SEND $2.00 for your catalogue and be placed on our mailing list:

CLASS-A ENTERPRISES, INC.
Suite 104 - 206 E. 6th Avenue
Vancouver, B.C. V5T 1J8

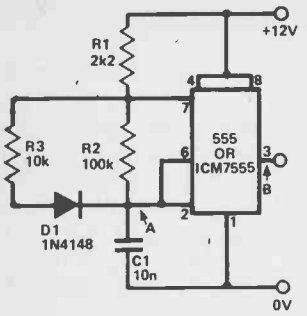

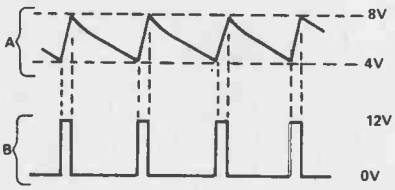

Fig. 9. Alternative method of producing a non-symmetrical fixed-ratio output form the 555 astable.

Thus, when D1 is fed with the square wave output of the astable, the peak output of the unit will be zero when the R6 voltage is zero, or 5 V when the R6 voltage is 5 V, etc. In our circuit, R6 is shunted by electrolytic capacitor C2. Thus, when PB1 is pressed, a large voltage is applied to R6 and a large-amplitude square wave output is available. When PB1 is released, the R6 voltage and the square wave output amplitude decay exponentially to zero

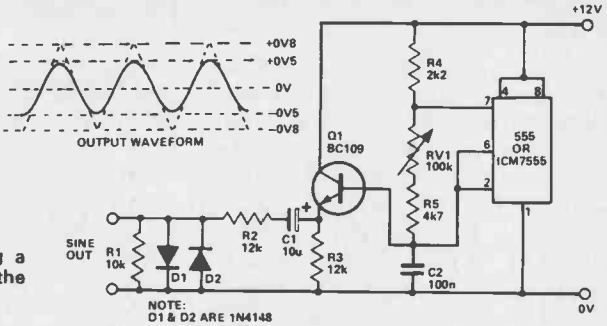

Fig. 11. A 555 sine-wave generator with a range of 83 Hz to 1.4 kHz (via R1).

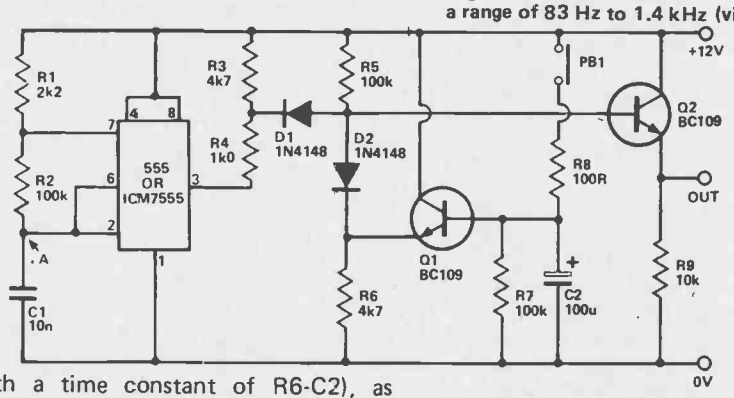

Fig. 13. A modification of the Fig. 12 circuit to give extended decay times and a buffered output.

(with a time constant of R6-C2), as shown in the diagram. The R3-R4 network is used to apply a slight offset bias to the rectangular input waveform, to ensure a full cut-off of the output waveform after PB1 is released.

Finally, Fig. 13 shows how the above circuit can be modified to give extended display times (via emitter follower Q1) and a buffered audio output (via emitter follower Q2). ●

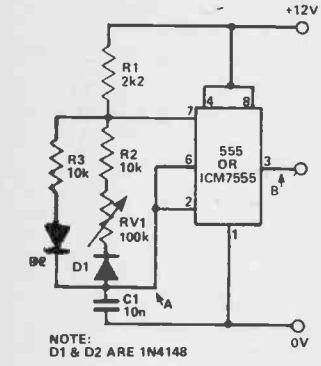

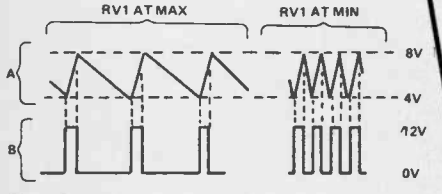

Fig. 10. A method of producing a non-symmetircal variable-ratio output from the 555 astable.

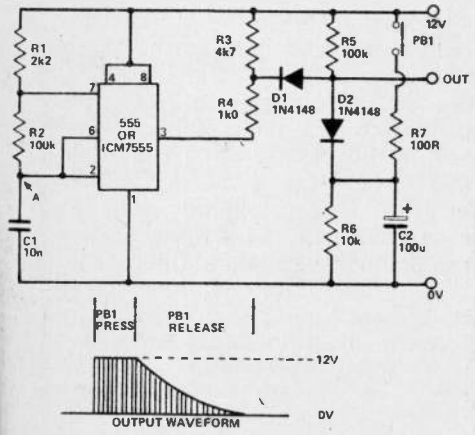

Fig. 12. A method of amplitude modulating the pin 3 output of the 555 astable in music and sound generator applications.

Who Do You Buy From?

Buying electronic parts in Canada can be a nuisance, nobody knows this more than we do. To help some of our more isolated readers we are compiling a list of stores in Canada for inclusion in the magazine in a future issue.

Tell us who you shop from. By doing so, you'll be helping readers like yourself and the stores you patronize.

We have included a list of the stores that appeared in the January 1981 Directory. Please do not send us names that appear there, we already know about them. Please send store names and addresses to:

ETI

Stores Directory
c/o Electronics Today
Unit 6
25 Overlea Blvd.
Toronto, Ontario
M4H 1B1

STORES DIRECTORY

BRITISH COLUMBIA
Kamloops
Cam Gard Supply Limited
Trail
IUS Electronics Ltd.
Vancouver
Active Component Sales Corp.
Cam Gard Supply Ltd.
Conti Electronics
Glenwood Trading Company Limited
Heath Company
Intek Electronics Ltd.
R-A-E Industrial Electronics Limited
Victoria
Quasie Electronics Ltd.
ALBERTA
Calgary
Active Component Sales Corp.
B & E Electronic Supply Limited
Visions
Edmonton
Cardinal Industrial Electronics Ltd.
Heath Company
R-A-E Industrial Electronics
Medicine Hat
Base 2 Consulting Limited
SASKATCHEWAN
Moose Jaw
Sonic Supplies Ltd.
Regina
Radio Supply & Service (1977) Limited
Saskatoon
Cam Gard Supply Limited
Swift Current
G W Colortronics Ltd.
MANITOBA
Winnipeg
Cam Gard Supply Ltd.
Heathkit Electronic Center
J & J Electronics Limited
W.E.S. Electronics Limited
ONTARIO
Brampton
Bryan Electronics
Georgetown
Inventories Unlimited
Guelph
Neutron Electronics Limited
Kitchener-Waterloo
K-W Surplus Clearinghouse
Waterloo Electronic Supply Co. Inc.
Computer Innovations Limited
London
R.J. Buckland Company
Forest City Surplus Ltd.
Mississauga
Atwater Electronics Limited
Heath Company
K.S.K. Associates
Ottawa
Active Component Sales Corp.
Compumart
Computer Innovations Limited
Gervais Electronics Limited
Heath Company
Kris Electronics
Videoland
Wackid Radio
Owen Sound
North Western Electronic Supply Limited
North Bay
Videoland
Sarnia
Videoland
Simcoe
Norfolk Electronics Limited
Toronto
A-1 Electronics
Active component Sales Corp.
Active Surplus Annex
Arkon Electronics Limited
Batteries Included
Cesco Electronics Ltd.
Dominion Radio and Electronics
Elsonscience Inc.
Electro Sonic Inc.
Electronics 2001
Excaltronix Components & Computing Incorporated
General Electronics
Gladstone Electronics
Home Computer Centre
House of Computers Inc.
M & W Computer Stores Inc.
Radio Trade Supply Limited
Videoland
Zenith Radio Canada Limited
Waterford
Copeland Electronics
QUEBEC
Blainville
Surplus Electro Quebec
Amirex Electronique Inc.
Longueuil
Master Vox Ltd.
Monte-Joli
Distribution JMC
Distribution Inc
Montreal
Active Component Sales Corp.
Addison Electronic Ltd.
Cite Electronique
Cesco Electronics Ltd.
Eico Electronics
Hamilton Avnet Electronics
Heath Company
North American Electronics Co. Limited
Payette radio
Radio Hoysep
Products Electroniques Lteel Electronic
Wholesalers Co. Limited
Standard Electronics
Super Electronic
St. Romuald
Selco Electronics
Thetford Mines
Elektronicke Enr.
Trois Rivieres
Matteau Electronique
NEW BRUNSWICK
Moncton
Amphion Electronics Limited
NOVA SCOTIA
Halifax
Amphion Electronics Limited
Basic Computer Sales Ltd.
Cam Gard Supply Limited
Mini Comp Systems Limited
Sydney
Fisher Electronics Limited
PRINCE EDWARD ISLAND
Charlottetown
Island Radio Centre Limited
NEWFOUNDLAND
St. John's
Electronic Centre Limited

Continued from page 47

WHAT'S NEW

It's actually possible to tell the computer how fussy it is to be with regards to the position of each note in regards to the meter. It can be set in increments of fraction of a note, down to 1/128 note. However, this all but defeats the wonderful artistic splendor of this feature for those of us who play . . .with expression, which is to say, a bit sloppily from time to time. Suppose, instead, we tell it to regard the smallest increment of time as a quarter note. With this in mind, any note played anywhere within an eighth note before or after where it should have been will turn up right on time. Freaky far out.

Overdubs, or over writings, or whatever you'd call them, done on the system are capable of being altered in pretty well all the ways by which you could change the tracks of a multitrack recording done on real magnetic tape, plus, of course, the others we've looked at. Thus, for example, one voice in eight, or one part of one voice, can be changed. Whole voices can be eliminated. You don't even have to rewind.

Oh ya, and there's even synthetic reverb, but it sounds real. First rate European cathedral sound. You can almost hear the frescos crumbling and falling off the ceiling in bits.

Play (Call Subroutine)

'When I explain this thing, sometimes there's a problem getting people to understand what the words mean.' McLey explains.'If I want it to play, I just say 'play', and it knows what I mean. But people are so used to computers dealing with codes that they can't see it as just a word. They want to know if a musician can reasonably be expected to deal with a computer.'

The cool thing about McLey's system, the aspect of it that's gobbled much of the time he's spent in developing it, is that it tends to be rather transparant to the user. It doesn't behave like a computer . . .it's more like talking to another musician over a keyboard and CRT, instead of an intercomm. Thus, instead of going 'F69 Error in location 033A' and beeping incessantly, it just tells you to 'Guess Again' when you tell it to 'drop dead'. That, actually, seems to be its only error message; its language is so simplified, and it is so sophisticated in handling it, that it doesn't really need a whole barrage of codes and flags.

Absolutely everything you tell the system to do is in English, a bit more precise than conversation, but there isn't a 'CALL' or a 'GOSUB' to be found. The fact that it's a computer quickly becomes irrelevant. It's no more difficult to understand than a new synthesizer. A bit more tricky to pay for, perhaps. . .

An example of this is in setting up the voices. The machine can be instructed to put a 'virtual synthesizer' on the screen of its terminal, a block diagram of one of McLey's voice boards, with all the parameters setable from the keyboard. Thus, the waveshape of the oscillators, the slope of the filter, the attack and decay times and so on can be set. It's a perfect analog of plugging together modules with patchcords. McLey's only used it once.

The first voice he produced was laboriously set up using this analog. However, the system, permits the parameters to be changed without resorting back to this thing, so any voice can be modified into any other voice by just changing characteristics. For example, the harpsichord voice could be changed to a horn by saying:

Use the harpsicord voice, but with a square wave oscillator.
Use a high sustain level
Use a higher filter frequency.
Use a shorter decay.

and so on. Because this process is so easy to keep doing, a voice can easily be developed by trial and error, fiddling with one characteristic at a time until it's right. It can there upon be renamed, and remembered as a new voice. McLey has a library of over a hundred voices at the moment, which he considers to be pretty bare. 'I haven't really developed a lot of sounds yet, because we're still changing the voice boards. It's a drag to sweat over a sound and get it right only to have to throw most of it out when the new cards come.'

Encore

Unfortunately, the really splendid part of McLey's marvelous new instrument doesn't reproduce well on paper; the sound of it can blow the mind clear into the next dimension. At times, it is almost too perfect to be taken for real. Every note is set flawlessly in place, and every instrument perfectly miked and reproduced. It is, in fact, capable of doing things beyond the scope of accoustic instruments, such as having the lute stop of the harpsichord sound as loud as a French horn, or have a flute playing down in the same register as a cello. It's also capable, when doing scores and figuring out transpositions and parts for actual accoustic instruments, to indicate the impossibilities of such things. Thus, one could use it to score a piece for given instruments and let it keep track of whether what was going down was actually playable by those particular instruments. In a while, it will be so sophisticated in this respect that it will be capable of figuring out chords for guitar in terms of whether a hand could actually finger them.

And everything comes out perfectly. Man, old J.S. Bach'd have loved the thing. Except, of course, it doesn't speak German.

Next month . . .ah, next month will be September, when the leaves get colourful, the kids go back to school, and the new shows crop up on TV. Not in this particular order, of course. The new shows make the leaves die, I think.

Next month, however, is also the due date for the end of civilization and the coming of the antimatter wizards, according to the Church of the Eclesiastic Food Processors. Now, if this comes to pass, as it is written in the sacred scriptures of this cult on paper towels handed down to the prophet Roderick Melvin the Atonal from on high, or while high, I'm not sure which, yes, if this should transpire, friends, we're all due to be transmuted into pink plastic flamingos, to be placed upon the front lawns of the wizards' in laws for time ever after. Therefore, when you get the next copy of ETI, scurry quickly away from the newsstand and. . .

. . . *Read this column first.*It may be last thing you check out before . . .plastification sets in.

Be brave, my children, and stay tuned. ●

DYNAMIC

sabtronics

Item	Model	Description	Kit	Assembled
A	2010A	LED Bench/Portable DMM	$159.53	$207.87
B	2015A	LCD Bench/Portable DMM	$191.75	$240.09
	8110A	100MHz Bench/Portable Frequency Counter	$159.53	$207.87
C	8610A	600MHz 8 Digit Bench/Portable Frequency Counter	$191.75	$240.09
	8610B	600MHz 9 Digit Bench Frequency Counter	$207.87	$272.32
D	5020A	1Hz – 200KHz Bench Function Generator	N/A	$207.87
E	8000B	1GHz Bench 9 Digit Frequency Counter	N/A	$385.11
F	2035A	LCD Handheld DMM	$138.60	$174.90
G	2037A	LCD Handheld DMM/Thermometer & Probe	$174.90	$213.40

ACCESSORIES

Model	Description	Price
PSC-6E	600 MHz Prescaler: Accurately extend any 60MHz Counter up to 600MHz and above.	$79.76
THP-2●	Touch & Hold Probe: For use with Models 2010A, 2015A, 2035A and 2037A DMM's.	$35.45
HVP-3●	High Voltage Probe: Extend any 10M impedance DVM to 30,000 VDC	$59.75
AC-12●	AC Adapter/Charger: Permits AC line operation of all Sabtronics Bench/Portable DMM's and Frequency Counters.	$14.75
NB-12●	NiCd Batteries: Set of 4 "C" size cells. Provides up to 8-12 hours of continuous use.	$38.67
LFP-10	Audio Frequency Probe: Switchable for either low frequency (DC-100KHz) or high frequency (.1-100MHz).	$35.45
RFA-1●	Telescopic RF Pick-up Antenna: For use with any BNC input connector type frequency counters.	$17.72

DEALERS WELCOME. Please call for further information and quantity pricing. All above merchandise has Federal Sales Tax in price, just add Provincial Sales Tax (Ontario Residents Only) @ 7%. Include with all orders $6.75 per instrument for handling and shipping. Prices Subject To Change Without Notice.

Sabtronics revolutionized the market with the first low cost, high performance Digital Multimeter. Now representing Sabtronics in Canada, Inouye Enterprises Limited is featuring the complete line of outstanding instruments and accessories available now and the new instruments and accessories soon to be released. The engineers at Sabtronics have designed high performance into their products, but still to be built at a low cost. At Inouye Enterprises Limited, we guarantee your kit to work, or bring it back to us or any one of our Authorized Dealers. We guarantee the factory assembled units for a period of one year and the kits for a period of 90 days from the date of purchase.

PLEASE NOTE: In the event of a postal disruption, please do not hesitate to call us with your orders. We will be happy to process your order C.O.D. or through your VISA or Master Card via courier service.

To speed delivery enter VISA or Master Card numbers when issuing personal cheques. Include your expiry date and your signature. This will enable us to process your order in the least amount of time.

DYNAMIC SOUND AND COMPONENTS, division of Inouye Enterprises Limited, 87 Green Lane, Unit #12, Thornhill, Ontario, L3T 2A1. (416) 886-1070/71.

Circle No. 33 on Reader Service Card.

RAEKIT

CMOS Electronic Dice Kit

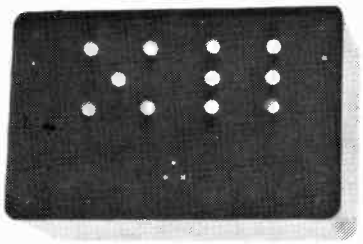

At last: a pair of truly fair dice that you don't even have to throw! Just touching the contacts on the CMOS Electronic Dice will start the LED's "rolling". Within moments they will freeze in a random pattern of dice. After a few seconds the circuit will turn itself off to conserve its batteries.

$24.95

RAEKIT #3010

MAIL ORDER INFORMATION

Payment by VISA/Mastercard (Include signature, number and expiry date), cheque or money order. Add $2.00 for shipping, B.C. residents add 6% Sales Tax.

Visit our new Edmonton store

R-A-E Industrial Electronics Ltd.
3455 Gardner Court, Burnaby, B.C.
V5G 4J7 Phone: (604) 291-8866

VISA MasterCard

Circle No. 4 on Reader Service Card.

eti cat door...

When was the last time you did something nice for your faithful little kitty cat, the adoring creature that leaves you gifts of dead mice in your underwear drawer, claws the legs of your two hundred year old antique dining room suite and awakens you cheerfully at four AM with a mating call that sounds like feeding time at the day care centre? You cad! You've been taking all this devotion for granted. Well, now, for the low price of $6.75 plus 7% PST for Ontario residents, you can buy the new ETI combination swinging cat door and magazine binder. Easily attached over any convenient hole using two common railroad spikes or a lot of masking tape, it permits your pet to come and go as it pleases. Plus, should one of your neighbours, less enamoured of kitty than yourself, get the trusty twelve gauge and blow it into next week, your new cat door will hold a whole year's worth of ETI magazines. The new ETI cat door binder costs no more than the old binder used to. It comes in five decorator colours, all of which are black. Write for quantity prices if you want to do something nice for your llama.

ETI Cat Door/Binders
Unit 6, 25 Overlea Blvd.
Toronto, Ontario
M4H 1B1

INTRODUCING

amitron®

HIGH POWER CROSS-OVER FILTERS

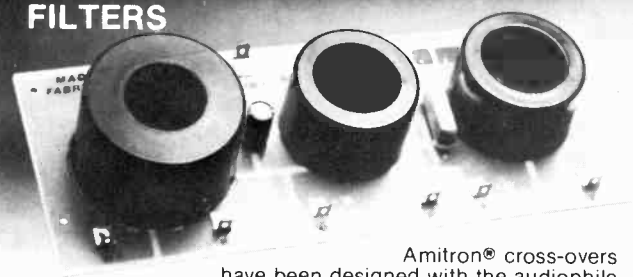

Amitron® cross-overs have been designed with the audiophile in mind. All capacitors are 100 Volt ratings having a tolerance of ± 10%, and all coils are wound to a 1% tolerance and encased with a protective cap. The M.I.L. spec fibre-glass board has minimum copper removal to allow for high current capacity, and incorporates 0.205" (standard) terminals for quick connect usage.

Three conventional cross-over models
Two sub woofer models
12 and 18 db models to 200 watts

For further information contact:

McBRIDE M McBRIDE McBRIDE McBRIDE

LOUDSPEAKER SOURCE INC.
Exclusive Canadian Distributor
14-440 Phillip St., Waterloo, Ont. N2L 5R9 (519) 884-3500

Circle No. 14 on Reader Service Card.

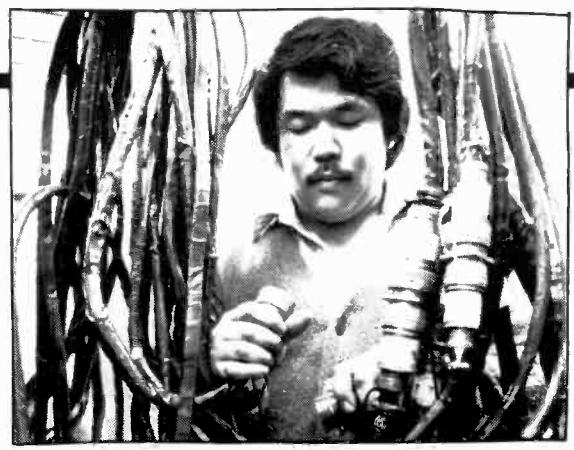

Yes, it does look like somebody stole all the wires out of it. Rather peculiar how such things can happen. They were all in there just the other day. You see, the problem here is that there are all sorts of possible explanations. It could be the work of carniverous cable rats. It may be the boss's idea of a unique pink slip. Or, it could be a new wrinkle in technology. If it were rats, there'd probably be telltale signs, like Minnie Mouse pin-ups all over the inside of the cable. The only way to really be sure which of the other two options are involved is to be really up on what's happening in the forefront of electronic technology. And the best way to do that is to read ETI.

If you're like this fellow, a bit tied up in your work, you might not find it altogether convenient to get out to the newsstand to get ETI each month. You might want to subscribe. For just $16.95 a year, or $29.95 for two, you can have ETI delivered right to your door. . . or your cable tunnel, if you prefere.

ETI Magazine
Subscriptions Dept.
Unit6, 25 Overlea Blvd.
Toronto, Ontario
M4H 1B1

TECH TIPS

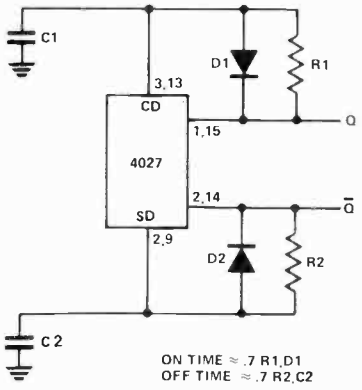

CMOS Monostable

Barry Wilkinson

This monostable uses a 4027B CMOS JK flip-flop. The time constant is set by R1C1, and D1 speeds the discharge of C1.

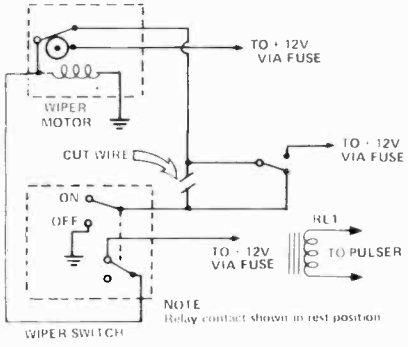

'Nother Wiper Delay

Thomas Smith

Grant Wood's wiper delay circuit (ETI, January 1981) will not function with some motors, especially those manufactured by Bosch. These motors have a set of contacts that short the motor windings to park the wipers. A DPST relay must be used to prevent blown fuses.

TT23

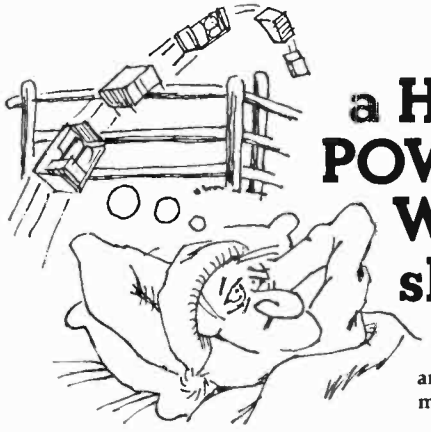

a HAMMOND POWER SUPPLY Will let you sleep nights

Hammond Power Supplies are designed 3 ways better for maximum reliability, long life and your peace of mind.

1. QUALITY COMPONENTS
Our design uses hermetically sealed IC Regulators and Integrated Darlington Transistor output regulation stages. Reliability is increased 4:1 over competitive economy units using plastic devices. The reduced component count further increases efficiency by as much as 2:1. We also use enclosed, wire wound pots for output voltage adjustment to provide much longer service than the open carbon types used by, some competitors.

2. CONSERVATIVE RATINGS
Our smaller units use a 100 watt hermetically sealed output stage compared to the 30 to 60 watt plastic transistors typically used. Our larger models feature a TO - 3 hermetically sealed dual rectifier derated to 30% or less of its capacity to eliminate rectifier failure.

3. BETTER CONSTRUCTION
Our transformers are electrostatically shielded isolation types which, together with a high frequency by-pass capacitor filter circuit, reduce noise and H.F. transients by more than 4:1. We mount the TO - 3 can directly on the frame for optimum heat transfer and use more dissapation material than others to ensure much higher output current at elevated temperature.

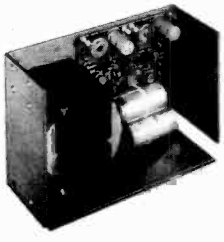

HOW MUCH BETTER?
Enough to show a MTBF of 50,000 hours. 60,000 hours for the same units at 10% derating. Enough that we don't hesitate in giving you a full 2 year warranty.
Invest in some peace of mind. Ask for us by name at distributors across Canada or circle our number on the reader card for catalogue and prices.

HAMMOND MANUFACTURING

HAMMOND MANUFACTURING COMPANY LIMITED
394 EDINBURGH RD. GUELPH ONT. N1H 1E5
PHONE (519) 822-2960 OR (416) 456-3770

Circle No. 8 on Reader Service Card.

From HAMEG...

HM307

$550

The only portable scope with a component tester.

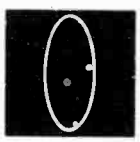
Capacitor 33 uF

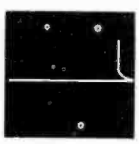
Transistor E-C

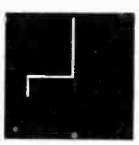
Transistor B-E

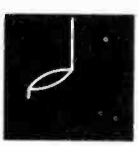
B-E 1 uF + 68 ohms

Oscilloscope Specifications:

Y Deflection	X Deflection
Bandwidth: DC – 10 MHz (3 dB)	Timebase: 0.2s – 0.2 us/cm
Overshoot: Less than 1%	Triggering: 2 Hz – 30 MHz (3mm)
Sensitivity: 5 mV – 20 V/cm	Auto + level control
Input Imp: 1 M ohm // 25pf	Bandwidth: 2Hz – 1 MHz

General Information

Component Tester:	For single components and in circuit
Calibrator:	0.2V ± 1% for probe alignment
Power Supplies:	Regulated including high voltage
A.C. Input:	110, 127, 220, 237, VA.C., 50 – 60 Hz
Weight:	8-1/4 Lbs.
Size:	4-1/2" H x 8-3/8" W x 10-7/16" D

BCS ELECTRONICS LIMITED

We service all makes of Oscilloscopes:
TEKTRONIX • HEWLETT-PACKARD • GOULD • ETC.
From coast to coast. Call us next time.

980 Alness St., Unit 35, Downsview,
Ontario (416) 661-5585 M3J 2S2

Circle No. 10 on Reader Service Card.

KIT-KING

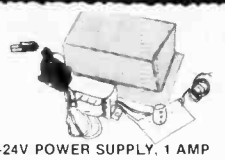

0-24V POWER SUPPLY, 1 AMP

Build the basics and protect all your projects with this regulated power supply kit.

"A MODE ELECTRONICS KIT"
boxed kit without P.C.B. — $26.50
boxed kit with P.C.B. — $29.95
bagged kit without P.C.B. — $24.95

XENON STROBE LIGHT KIT

Fun, simple to build, instructions included
"A MODE ELECTRONICS KIT"

boxed kit without P.C.B. — $14.50
boxed kit with P.C.B. — $15.50
bagged kit without P.C.B. — $12.50

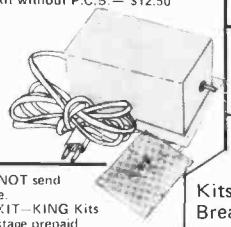

– DO NOT send postage.
– All KIT–KING Kits are postage prepaid.
– C.O.D. orders $2.00 additional
– Ontario residents add 7% sales tax
– Mastercharge, VISA, Money Orders
– Be sure to sign your order
– DO NOT send cash

THE STARLIGHT

An exciting digital controlled audio activated light display control unit. P.C. board and all parts except case and lights included, 1500w.

A "KIT KING KIT" — $49.95

3-CHANNEL COLOUR ORGAN
A classic! Still one of the favourites of kit builders.
3-channel colour organ with master control.

"A MODE ELECTRONICS KIT"

boxed kit without P.C.B. — $16.50
boxed kit with P.C.B. — $17.50
bagged kit without P.C.B. — $15.50

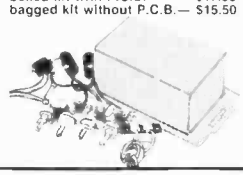

THE STEREO SIX

KIT KING'S exclusive 6 channel stereo colour organ with audio limiter. P.C. board included. 1500w.

A "KIT KING KIT" — $49.95

YEARLY SUBSCRIPTION!
To receive Bulletins and Flyers for KIT–KING'S exciting new Kits, Protoboards and our low cost Bread-board Kit Line, send $3.50 to:

KIT-KING
P.O. Box 2068
Bramalea, Ontario
Canada, L6T 3S3

Circle No. 19 on Reader Service Card.

PLASTIC BOXES

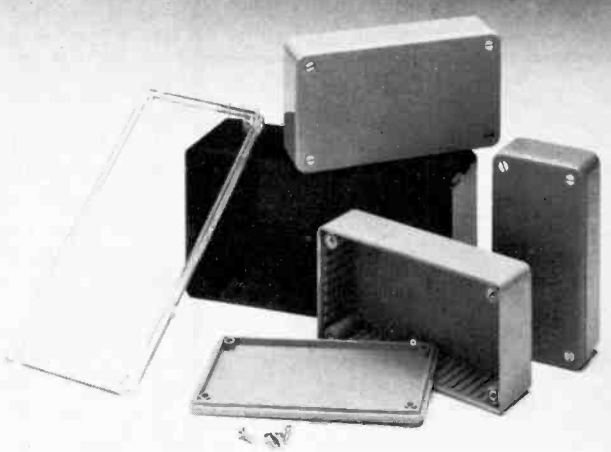

A serviceable range of boxes complete with integral card guides, moulded from abs flame retardant thermo plastic in orange, blue, grey and black. Six sizes available with choice of plastic, metal or clear crystal lid. Economical styrene boxes also available in six sizes, black only with styrene lid.

FREE CATALOGUE

HAMMOND MANUFACTURING

HAMMOND MANUFACTURING COMPANY LIMITED
394 Edinburgh Road N.
Guelph Ontario Canada
N1H 1E5

Circle No. 7 on Reader Service Card.

Continued from page 61

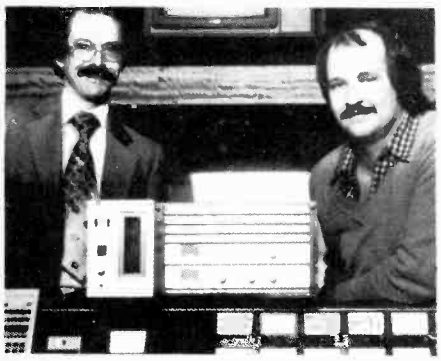

Only In Canada, You Say.....

The experiences of people like Tommy Hunter and Gordon Lightfoot while in the New Knighted States for recording sessions may go a long way towards making the safety of Canadian cities attractive to both American and Canadian artists, and keeping our recording studios busy.

The fact that so many of these studios are superbly equipped and staffed by first class engineers doesn't hurt either.

And now there's digital.

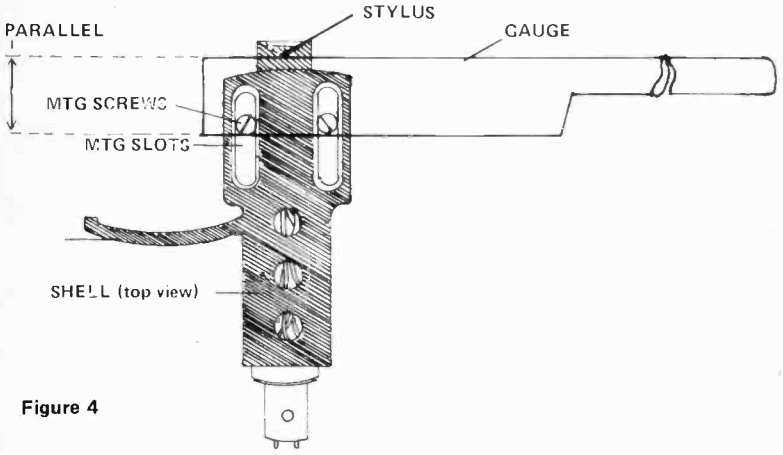

Figure 4

McClear Place Studios Ltd., of Toronto now holds the distinction of being the first Canadian recording studio to acquire digital recording equipment. The system is the Sony Digital Recording System, and coincides with the studio's planned expansion to include a dual purpose stereo digital and analogue mobile facility.

The first efforts were recorded for the independent high quality jazz label *innovation*, and recent efforts include Sackville records first digital release, with Don Thompson and Ed Bickert, as well as a live club session with Rob McConnell and the Boss Brass for Jazz Music Productions.

In support of this and other moves into digital, Sony has installed a fully electronic digital editing suite in a central Toronto location using their DAE1100 Computer Editor. It features microsecond editing accuracy, digital cross-fade, fade in and out, and will be made available to anyone using Sony's new digital recorders.

Contact Sony Canada, Professional Products Div., 411 Gordon Baker Rd., Willowdale Ont., M2H 2S6.

NEI

120W DC Super Class A Power Amplifier Kit $84.95

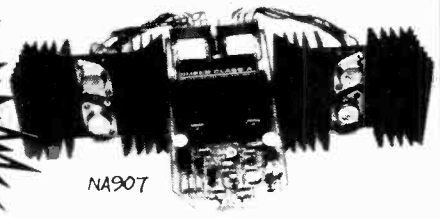

10% off with this ad

*PRICES GOOD THRU. OCT. 1981

Kit No.	Description	Price
NA904	70W Low Tim Power Amp	33.95
NA905	60W MOS FET DC Power Amp	59.95
NA906	120W MOS FET DC Power Amp	134.95
NA908	200W x 2 DC Power Amp W/Servo Power Supply	214.95
NA909	75W x 2 Pure Class A DC Power Amp W/Cabinet	599.95
NA920	IC Stereo Phono Pre-Amp	5.95
NA921	IC4739 Stereo Tone Control	15.95
NA922	DC Class A Professional Stereo Pre-Amp W/Regulator	68.95
NA924	DC FET Super Class A Stereo Pre-Amp	94.95
NA925	Professional FET Stereo Pre-Amp	45.95
NA940	30W IC Stereo Amp	39.95

Kit No.	Description	Price
NA943	140W Stereo DC Class A Amp W/Spk. Protector	128.95
NA945	250W Stereo Class A Amp W/Spk. Protector	179.95
NA947	25W x 2 Mini Integrated Amp With LED Meter & Case	99.95
NA960	15 Step LED Level Meter	49.95
NA963	15 Step V-Shaped LED Level Meter	30.00
NA980	Spk. Protector With Delay	11.95
NA983	Pro Parametric Equalizer	189.95
NA984	Electronic Echo And Reverberation Amp	189.95
NA986	FM Mic (IC) W/Case	10.95
NC701	2½" Jumbo LED Clock	45.95
NR800	0-60V 3.5A Regulator	21.95

NEWTRONICS ENGINEERING INC.
208 Spadina Ave., Suite 110,
Toronto, Ontario M5T 2W3
(416) 368-8994

FREE 1981 CATALOGUE

—Send Cheque Or Money Order Plus $2.00 For Postage/Handling
—Ontario Residents Add 7% P.S.T.
—Federal Sales Tax Included.

Circle No. 25 on Reader Service Card.

ACCESSORIES

FROM OK MACHINE TOOL
Battery Wrap
Tool-BW-2630: $27.95
Bit for AWG-30-BT-30: $5.49
Just-Wrap Tool-JW1: $20.95
(Available in Blue-White-Yellow or Red)
Manual Wrap-WSU-30: $9.95

FROM AP PRODUCTS
ACE 200K-Solderless Board: $29.95
HOBBY BLOX-Modular Circuit
Basic IC's Starter Kit: $8.95
Basic Discrete Components Kit: $9.25
(Each one includes a Project Book)

ASK FOR YOUR FREE CATALOG
PHONE ORDERS: (418) 839-8367
Send your cheque, M.O., VISA or C.O.D., NO Shipping charge. Minimum order: $5.00 Quebec residents add 8% P.S.T.

SELCO ELECTRONIQUE
CASE POSTALE 2036
ST-ROMUALD
QUEBEC, G6W-5M3

Circle No. 24 on Reader Service Card.

555 Voltage Control

S Draper

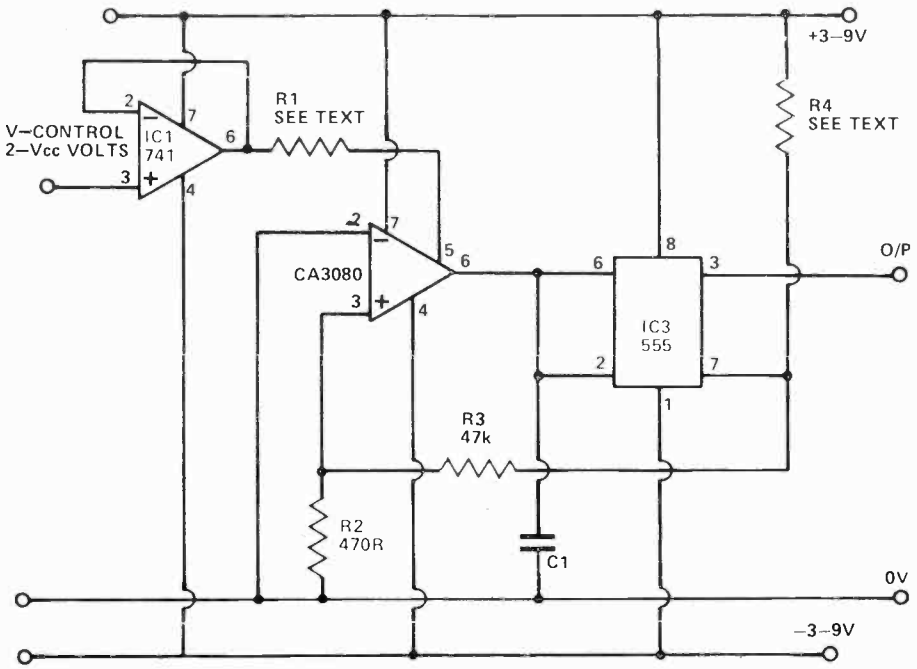

This circuit was developed to provide a cheap, reliable and accurate voltage controlled oscillator. It uses readily available components and the control over mark-space ratio common to other 555 circuits is retained. Frequency-voltage response is linear over approximately one decade making the circuit useful in timing applications. Operation is as follows.

IC1 buffers the input voltage and produces the control current for IC2. IC2 is an operational transconductance amplifier and produces an output current multiplied by the differential input voltage. This output current is used to charge and discharge the capacitor C1 in the normal way. The equation for output high and output low times are given below:

$$\text{Output high time} = \frac{R1C1\ (47.5+R4)}{9024V_{control}}$$

$$\text{Output low time} = \frac{R1C1}{192V_{control}}$$

where all resistances are in kilohms and all capacitances are in microfarads.

Current consumption is a miserly 10mA from a 12V supply making the unit suitable for battery power.

N.B. – R1 should not be less than 18k

Tech-Tips is an ideas forum and as such is not aimed at the beginner; we regret that we cannot answer queries on these items. We do not build up or test these circuits prior to publication.

WIRED SOUND *Continued from page 51*

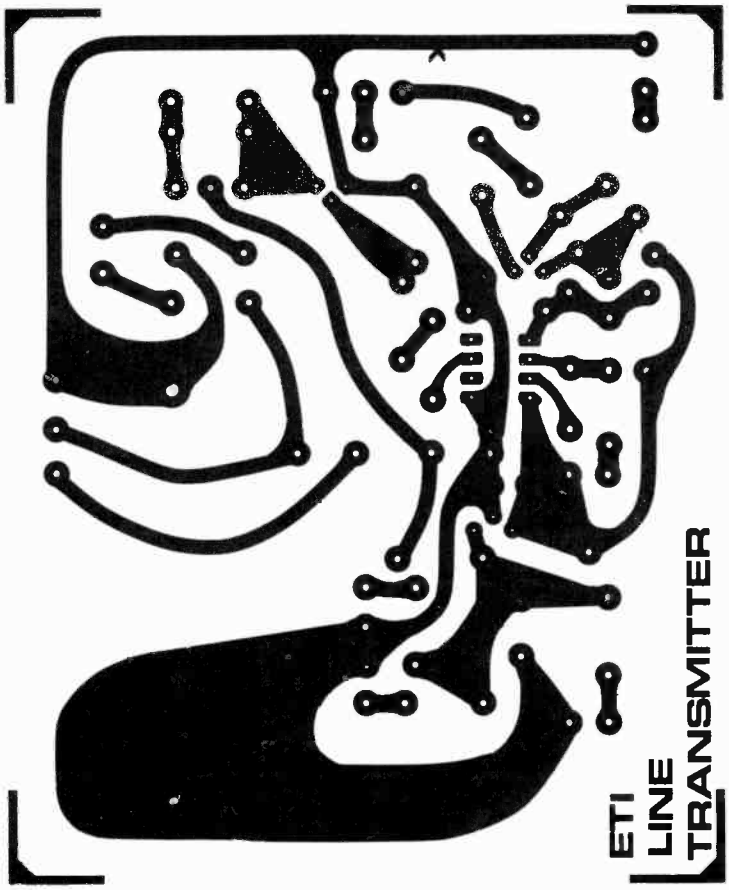

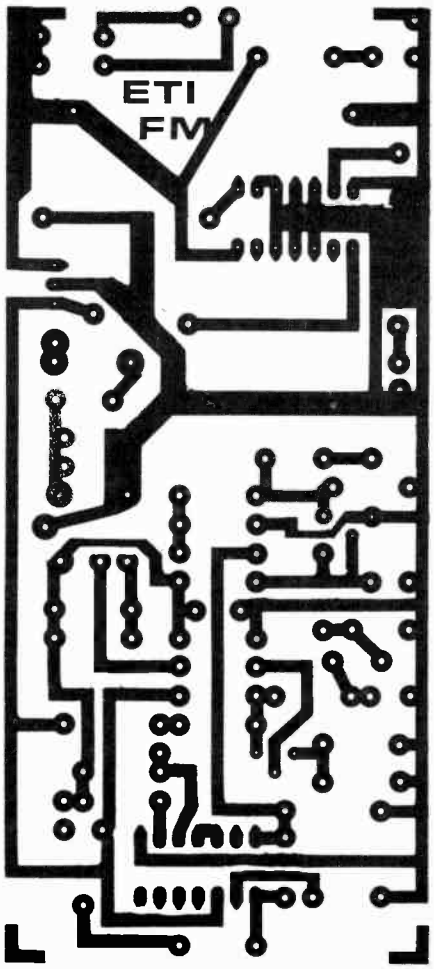

You can't beat The System!

GLOBAL SPECIALTIES CORPORATION

Smarter tools for testing and design.

1

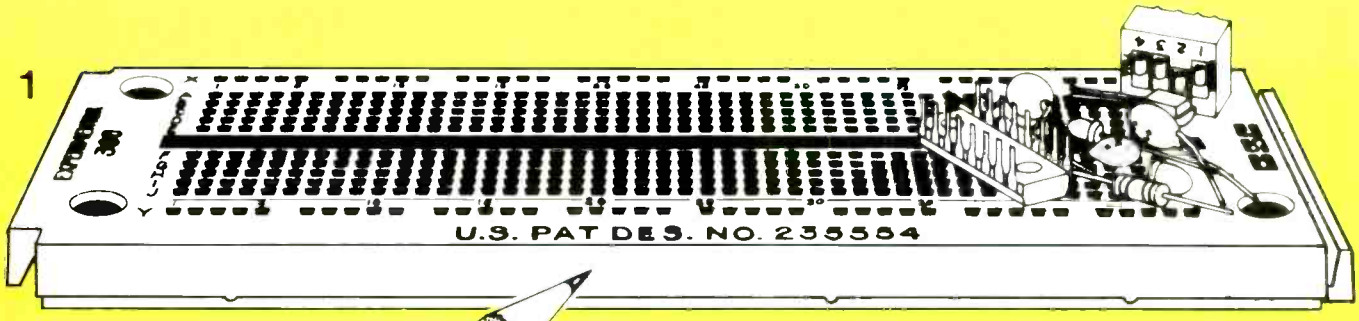

Experimentor solderless breadboard

2

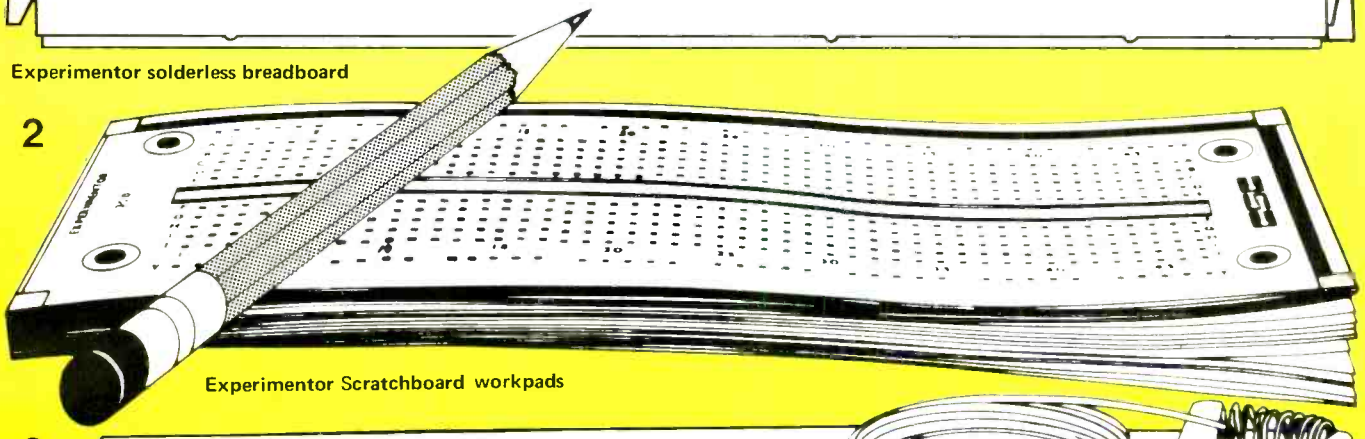

Experimentor Scratchboard workpads

3

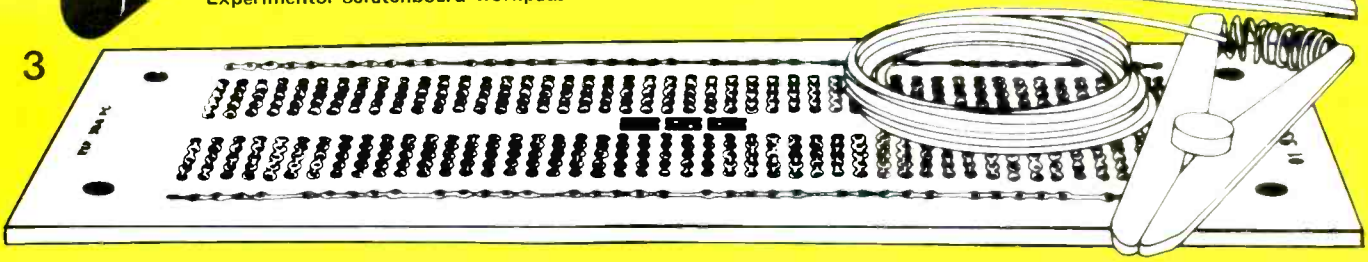

Experimentor Matchboard pre-drilled PCBs.

When you have a circuit idea that you want to make happen, we have a system to make it happen quicker and easier than ever before: The Experimentor System.

You already know how big a help our Experimentor solderless breadboards can be. Now we've taken our good idea two steps further.

We've added Experimentor Scratchboard workpads, with our breadboard hole-and-connection pattern printed in light blue ink. To let you sketch up a layout you already have working so you can reproduce it later.

With Experimentor Matchboard you can go from breadboard to the finished product nonstop! We've matched our breadboard pattern again, this time on a printed circuit board, finished and ready to build on. All for about $4.25.

There's even a letter-and-number index for each hole, so you can move from breadboard (where they're moulded) to Scratchboard (where they're printed) to Matchboard (where they're silkscreened onto the component side) and always know where you are.

When you want to save time and energy, you can't beat the Experimentor System.

THE EXPERIMENTOR SYSTEM

Circle No. 13 on Reader Service Card.

YOU CAN'T BEAT THE SYSTEM!

1	EXP-300PC which includes one item A Matchboard pre-drilled PCB	$4.25
2	EXP-302, which includes three items Three 50-sheet Scratchboard workpads	$5.20
3	EXP-303 which includes three items Two Matchboards and an EXP-300 solderless breadboard	$25.15
4	EXP-304, which includes four items Two Matchboards, an EXP-300 breadboard and a Scratchboard workpad	$26.70

For your FREE Global Catalogue, mail this coupon to:

len finkler limited
80 Alexdon Rd. Downsview, Ontario, M3J 2B4

Please send catalogue to:

Name _____ Position _____

Company _____ Dept. _____

Address _____

_____ Postal Code _____

Circle No. 13 on Reader Service Card.

Available from leading Electronic Parts Distributors

ACTIVE CONTINUES TO HOLD THE LINE ON PRICES

COMPUTER SUPPORT CENTER

Zilog

			Z80-SIO/0	2.5 MHz	29.19
			Z80A-SIO/0	4.0 MHz	36.21
Z80-CPU	2.5 MHz	9.04	Z80-SIO/1	2.5 MHz	29.19
Z80A-CPU	4.0 MHz	12.29	Z80A-SIO/1	4.0 MHz	36.21
Z80-PIO	2.5 MHz	7.09	Z80-SIO/2	2.5 MHz	29.19
Z80A-PIO	4.0 MHz	9.95	Z80A-SIO/2	4.0 MHz	36.21
Z80-CTC	2.5 MHz	7.09	Z80-SIO/9	2.5 MHz	21.91
Z80A-CTC	4.0 MHz	9.95	Z80A-SIO/9	4.0 MHz	28.00
Z80-DMA	2.5 MHz	20.74	Z80-DART	2.5 MHZ	15.54
Z80A-DMA	4.0 MHz	29.84	Z80A-DART	4.0 MHz	19.31

MOS MEMORIES

MOS Static RAM's

Part No.		Price
2101-35	1K (256 x 4) 350NS 22 PIN	5.14
2102-25	1K (1K x 1) 250NS 16 PIN	1.42
P2111-45	1K (256 x 4) 450NS 18 PIN	3.87
P2112-35	1K (256 x 4) 350NS 18 PIN	3.45
2114L	Low Power 4K (1024 x 4) 300NS	4.49
2147	4K (4K x 1) 55NS	12.94
2147	4K (4K x 1) 70NS	11.64

UART's

AY5-1013A — **Special** 5.14
40 Khz Single 5V Supply

1K CMOS RAM

5101 — 1K (256 x 4) 450NS 22 PIN Low Power — 4.49

4K CMOS RAM

P6504 — 4K (4K x 1) 550NS 18 PIN 110MW — 8.39
P6514 — 4K (1K x 4) 450NS 18 PIN 110MW — 8.39

SHIFT REGISTERS

1403A (TO-5) dual 512 bit 3.87
1404A (TO-5) single 1024 bit 3.87
3341APC FIFO 1 MHz 6.18
3342PC 64 bit 5.14
3347PC 80 bit 4.49

ECL RAM

10410ADC/HM2106 — 10.95
256 x 1 bit fully decoded 15NS 16 pin

CLOCK CHIP

MSM5832RS — 16.84
Microprocessor Real-time Clock/Calendar

MICROPROCESSOR CHIP SETS

8035 CPU	7.74	6800 CPU	6.05
8039 CPU	10.34	6802 CPU	11.25
8080A CPU	5.79	6808 CPU	8.39
8085 CPU	8.39	6809 CPU	25.94
8155	9.04	6810	4.75
8212	2.57	6820	3.45
8214	4.49	6821	3.45
8216	2.57	6845	38.35
8224	4.49	6850	3.45
8226	2.57	6852	3.45
8228	6.47		
8251	6.44	6502 CPU	9.69
8253	10.99	6504 CPU	9.95
8255	6.44	6505 CPU	9.95
8257	10.34	6520	7.44
8259	10.34	6522	10.34
8279	10.99	6532	14.11
8748	46.80	6551	14.24
8755	41.60		

PROM'S

74S288	3.25	256 bit 16 PIN
74S188	3.25	256 bit 16 PIN
93427/82S129	4.49	1K 16 PIN
93417/82S126	4.49	1K 16 PIN
93446/7621	6.44	2K 16 PIN
93436/7620	6.44	2K 16 PIN
93453/7643	10.34	4K 18 PIN
93448/7641	10.99	4K 24 PIN
93451/82S181	25.94	4K 24 PIN
82S185/7128	36.34	8K 18 PIN
74S478/7132	25.79	8K 24 PIN
82S191/7138	101.40	16K 24 PIN

EPROM'S

C1702A 2K 1US — $10.34
C2708 1K x 8 450 ns — $ 6.18
C2716/TMS2516 (Intel version) 16K 450NS Single 5V Supply — $9.07
TMS2532 (T.I. Pin Out) 32K (4096 x 8) 450 ns — $38.94
C2732 (Intel version) 32K (4096 x 8) 450 ns — $24.38
TMS2564 64K (8K x 8) 450 ns — $182.00

16K STATIC RAM — **Special** $29.84
TMM2016-3 16K (2K x 8) 300NS
16K MOS DYNAMIC RAM'S (16 PIN)
4116-20 (200NS) — $4.49
4116-30 (300NS) Ceramic — **Special** 3.19
4K MOS DYNAMIC RAM'S
TMS4060-30 — **Special** 3.45
4K (4K x 1) 300NS 22 PIN
16K CMOS STATIC RAM — **Special**
6116 16K (2K x 8) 150NS 15 PIN — $67.60
64K MOS DYNAMIC RAM
4164 64K (64K x 1) 200NS 16 PIN — $46.80 / $62.49

LINEAR I.C.'s

LM301AN-8	.42	LM348N-14	1.29	LM748CN-8	.51
LM307N-8	.38	LM358N-8	.68	LM1458N-8	.49
LM308N-8	1.14	LM555N-8	.33	LM1488N-14	.86
LM308CH	1.24	LM556N-14	.68	LM1489N-14	.86
LM309K	2.03	LM567CN-8	1.09	LM1495CN-14	2.54
LM310HC	1.94	LM709CH	.77	LM1496CN-14	1.77
LM311CH	1.09	LM714CH	4.75	LM2211CN-14	3.58
LM311N-8	.68	LM723CH	1.09	LM2240PC	2.15
LM318N-8	1.29	LM723CN-14	.62	LM3081DC	2.03
LM318CH	1.48	LM725CN-8	1.63	LM3403N-14	1.11
LM323K	6.05	LM733CN-14	1.77	LM3524PC	7.71
LM324N	1.92	LM739CN-14	2.20	LM3900N	.62
LM339N	6.44	LM741CH	.82	LM4136N-14	1.14
		LM741CN-8	.36	ULN2003AN	1.09
		LM747CN-14	.73		

DUAL-IN-LINE LOW PROFILE I.C. SOCKETS

CONTACTS	PRICE
8 PIN	.11
14 PIN	.16
16 PIN	.20
18 PIN	.27
20 PIN	.30
22 PIN	.33
24 PIN	.36
28 PIN	.42
40 PIN	.61

BURNDY

CMOS

CD4001BE	.23	CD4040BE	.85	CD4108BE	2.20
CD4002BE	.23	CD4041BE	1.16	CD4510BE	.75
CD4006BE	.77	CD4042BE	.70	CD4511BE	.73
CD4007BE	.31	CD4043BE	.77	CD4512BE	.94
CD4008BE	.87	CD4044BE	.62	CD4514BE	2.18
CD4009BE	.51	CD4046BE	.99	CD4515BE	2.82
CD4010BE	.51	CD4047BE	.90	CD4516BE	.98
CD4011BE	.23	CD4049BE	.49	CD4519BE	.68
CD4012BE	.23	CD4050BE	.42	CD4520BE	.73
CD4013BE	.38	CD4051BE	.99	CD4522BE	1.01
CD4014BE	.73	CD4052BE	1.03	CD4526BE	1.63
CD4015BE	.73	CD4053BE	1.03	CD4527BE	1.16
CD4016BE	.42	CD4060BE	1.16	CD4528BE	.94
CD4017BE	.70	CD4066BE	.62	CD4531BE	2.07
CD4018BE	.68	CD4068BE	.31	CD4532BE	1.09
CD4019BE	.62	CD4069BE	.23	CD4539BE	.77
CD4020BE	.88	CD4070BE	.31	CD4543BE	1.87
CD4021BE	.74	CD4071BE	.30	CD4553BE	2.46
CD4022BE	1.03	CD4072BE	.25	CD4555BE	.90
CD4023BE	.23	CD4073BE	.31	CD4556BE	.55
CD4024BE	.57	CD4075BE	.36	CD4581BE	2.46
CD4025BE	.26	CD4076BE	.70	CD4582BE	.90
CD4026BE	1.89	CD4078BE	.31	CD4584BE	.55
CD4027BE	.55	CD4081BE	.23	CD4585BE	1.03
CD4028BE	.70	CD4082BE	.23	CD4702BE	11.64
CD4029BE	.94	CD4085BE	.57	40097PC	.94
CD4030BE	.94	CD4086BE	.90	40098PC	.94
CD4033BE	.94	CD4093BE	.49	40161PC	1.56
CD4034BE	3.17	CD4099BE	2.28	40174PC	1.27
CD4035BE	.90	CD4104BE	3.07	40175PC	1.27

OPTOELECTRONICS

L.E.D. LAMPS

LED209	T-1 3 mm Red	.12
LED211	T-1 3 mm Green	.25
LED212	T-1 3 mm Yellow	.18
LED220	T-1¾ 5 mm Red	.14
LED222	T-1¾ 5 mm Green	.31
LED224	T-1¾ 5 mm Yellow	.21

DISPLAYS

FND357	.375	Common Cathode	1.29
FND500	.500	Common Cathode	1.29
FND507	.500	Common Anode	1.29
DL1416			32.50

4 digit, 16 segment alphanumeric display 16 pt

ISOLATORS

ILD74	Dual Opto Isolator	1500V	1.68
ILQ74	Quad Opto Isolator	1500V	5.14
ILCT6	Dual Opto Isolator	1500V	1.68
MCT2	Opto Coupler	1500V	.70
TIL111	Opto Coupler	1500V	.70
4N26	Opto Isolator	2500V	.70
4N33	Opto Isolator	1500V	.85

VOLTAGE REGULATORS

78XXKC (TO-3) 1 amp	pos.	$2.44
78XXUC (TO-220) 1 amp	pos.	.83
78MXXUC (TO-220) ½ amp	pos.	.47
79XXKC (TO-3) 1 amp	neg.	2.93
79XXUC (TO-220) 1 amp	neg.	.98
79MXXUC (TO-220) ½ amp	neg.	.88
78H05KC (TO-3) 5 amp 5V		7.74
78P05KC (TO-3) 10 amp 5V		12.55
78H12KC (TO-3) 5 amp 12V		7.74
78H15KC (TO-3) 5 amp 15V		7.74
78MXXHC (TO-5) ½ amp	pos.	2.15
79MXXHC (TO-5) ½ amp	neg.	2.41
78LXXAWC (TO-92)	pos.	.51

DIODES & RECTIFIERS

1 AMP RECTIFIERS

IN4001	.05	IN4005	.09
IN4002	.06	IN4006	.08
IN4003	.07	IN4007	.09
IN4004	.07		

3 AMP RECTIFIERS

IN5400	.16	IN5405	.25
IN5401	.18	IN5406	.27
IN5402	.20	IN5407	.29
IN5403	.22	IN5408	.31
IN5404	.23		

SUPER SPECIAL

IN250B 37 amp 200V — $2.55

ZENER DIODES

IN4728A — IN4752A (1 watt)	.16
IN4753A — IN4754A (1 watt)	.33
IN746A — IN759A (400 mW)	12
IN5224B — IN5252B (400 mW)	.13
IN5336A — IN5378A (5 watt)	.62

SWITCHING DIODES

IN914B	.05
IN4148	.05

SCR's and TRIAC's

CI06D	.44	SCR 5 amp 400V TO-220	
TIC44	.47	SCR 0.6 amp 30V TO-92	
TIC47	.55	SCR 0.6 amp 200V TO-92	
TIC116B	1.26	SCR 8 amp 200V TO-220	
TIC116D	1.29	SCR 8 amp 400V TO-220	
TIC126B	1.42	SCR 12 amp 200V TO-220	
TIC126D	1.53	SCR 12 amp 400V TO-220	
TIC216B	1.29	Triac 6 amp 200V TO-220	
TIC216D	1.29	Triac 6 amp 400V TO-220	
TIC226D	1.42	Triac 8 amp 400V TO-220	
TIC236D	1.81	Triac 12 amp 400V TO-220	
TIC246D	1.89	Triac 16 amp 400V TO-220	
TIC263D	2.93	Triac 25 amp 400V TO-220	
2N1595	1.16	SCR 1 amp 50V TO-5	
2N6401	2.03	SCR 16 amp 100V TO-220	

Bi-Fet OP AMPS

TL061CP	.94	Low Power
TL062CP	1.29	Dual Low Power
TL064CN	2.54	Quad Low Power
TL071CP	.70	Low Noise
TL072CP	1.25	Dual Low Noise
TL074CN	2.46	Quad Low Noise
TL081CP	.55	J-Fet Input
TL082CP	1.11	Dual J-Fet Input
TL084CN	2.07	Quad J-Fet Input
TL495CN	6.44	Switch. Volt. Reg. 25mA
TL497ACN	3.87	Switch. Volt. Reg. 500mA
TL430CLP	.90	Adj. Shunt Volt. Reg.
TL431CLP	1.01	Adj. Pos. Volt. Reg.

TRANSISTORS

TIP29A	.48	TIP41B	.74	TIP122	.94	2N404A	1.56	2N3055	.73
TIP29B	.49	TIP41C	.77	TIP125	.94	2N697	.38	2N3440	.73
TIP29C	.51	TIP42A	.74	TIP126	1.00	2N706	.38	2N3771	1.68
TIP30A	.51	TIP42B	.77	TIP127	1.09	2N1613	.38	2N3772	1.68
TIP30B	.55	TIP42C	.83	TIP140	1.87	2N1711	.38	2N3773	2.46
TIP30C	.55	TIP110	.70	TIP141	2.13	2N1893	.38	2N6133	.73
TIP31A	.49	TIP111	.74	TIP142	2.55	2N2222A	.25	2N6489	1.63
TIP31B	.55	TIP112	.83	TIP145	2.39	2N2369A	.29	2N6545	6.18
TIP31C	.59	TIP115	.72	TIP146	2.57	2N2484	.31	2N3439	1.01
TIP32A	.55	TIP116	.77	TIP147	2.93	2N2905A	.51	2N6059	3.19
TIP32B	.59	TIP117	.83	TIP2955	1.08	2N2907A	.25	2N6055	1.89
TIP32C	.62	TIP120	.83	TIP3055	.91	2N3053	.38	2N6079	5.01
TIP41A	.70	TIP121	.88	FT3055	.77				

2N3702	.13	2N4402	.10	2N5770	.16	MPSA18	.16		
2N3704	.13	2N4403	.10	2N5771	.17	MPSA42	.21		
2N3706	.13	2N4410	.20	2N5772	.18	MPSA43	.21		
2N3710	.13	2N5087	.16	PN2222A	.12	MPSA56	.16		
2N3904	.09	2N5088	.16	PN2369A	.12	MPSA70	.18		
2N3906	.09	2N5172	.16	PN2907A	.12	MPSA92	.18		
2N3907	.13	2N5220	.18	PN3565	.16	MPSA93	.16		
2N4123	.09	2N5221	.18	PN3567	.16	MPSA14	.16		
2N4124	.09	2N5223	.18	PN4249	.16	MPS2925	.16		
2N4125	.09	2N5226	.18	PN5138	.13	MPS2926	.16		
2N4126	.09	2N5227	.18	MPSA05	.16	MPS3391	.12		
2N4401	.10	2N5401	.20	MPSA06	.16	MPS3392	.16		
		2N5550	.14	MPSA13	.16	MPS3393	.16		
		2N5551	.18						

TTL

STANDARD, SCHOTTKY & LOW POWER SCHOTTKY

7400N	.29	74246N	1.77	74LS54N	.27
7401N	.29	74247N	1.61	74LS55N	.31
7402N	.31	74251N	.99	74LS73N	.42
7403N	.31	74259N	2.46	74LS74N	.46
7404N	.31	74273N	2.59	74LS75N	.49
7405N	.31	74276N	1.27	74LS76N	.49
7406N	.47	74278N	3.09	74LS78N	.38
7407N	.47	74279N	.77	74LS83N	.90
7408N	.31	74283N	1.27	74LS85N	1.09
7409N	.31	74293N	.94	74LS86N	.49
7410N	.31	74298N	1.09	74LS90N	.51
7412N	.49	74351N	2.86	74LS91N	1.16
7413N	.51	74365AN	.75	74LS92N	.60
7414N	.51	74366N	.90	74LS93N	.51
7416N	.47	74367AN	.75	74LS95N	.62
7417N	.46	74368AN	.75	74LS96N	.75
7420N	.38	74390N	1.25	74LS107N	.47
7422N	.47	74393N	1.68	74LS109N	.47
7423N	.47			74LS112N	.47
7425N	.42	74S00N	.47	74LS122N	.62
7426N	.51	74S02N	.49	74LS123N	.77
7427N	.42	74S03N	.49	74LS125N	.57
7428N	.55	74S04N	.73	74LS126N	.57
7430N	.29	74S05N	.62	74LS132N	.52
7432N	.51	74S08N	.62	74LS133N	1.27
7433N	.51	74S09N	.77	74LS136N	.57
7437N	.47	74S10N	.62	74LS138N	.74
7438N	.47	74S11N	.62	74LS139N	.62
7440N	.29	74S15N	.62	74LS145N	1.42
7442N	.57	74S20N	.62	74LS147N	2.57
7445N	1.09	74S30N	.47	74LS148N	1.77
7446N	1.09	74S32N	.83	74LS151N	.55
7447AN	.85	74S37N	1.16	74LS153N	.46
7450N	.29	74S38N	1.16	74LS155N	.87
7451N	.38	74S40N	.51	74LS156N	.94
7453N	.38	74S51N	.48	74LS157N	.62
7454N	.38	74S74N	.75	74LS158N	.62
7472N	.47	74S85N	2.57	74LS160N	.90
7473N	.47	74S86N	.94	74LS161N	.75
7474N	.47	74S112N	.94	74LS162N	.94
7475N	.51	74S114N	1.68	74LS163N	.75
7476N	.49	74S124N	3.33	74LS164N	.75
7483AN	.62	74S132N	1.61	74LS165N	1.16
7484AN	1.77	74S133N	.62	74LS166N	2.13
7485N	.86	74S134N	.70	74LS170N	2.07
7486N	.51	74S135N	1.68	74LS173N	.77
7490AN	.42	74S138N	1.25	74LS174N	.51
7491AN	.55	74S139N	1.25	74LS175N	.51
7492AN	.49	74S140N	.96	74LS181N	2.57
7493AN	.49	74S151N	1.29	74LS189N	5.79
7494AN	.88	74S153N	1.25	74LS190N	.94
7495AN	.70	74S157N	1.25	74LS191N	.94
7496N	.77	74S158N	1.25	74LS192N	.83
7497N	2.46	74S161N	3.71	74LS193N	.83
74100N	1.79	74S162N	4.81	74LS194N	.83
74104N	.83	74S163N	4.60	74LS196N	1.14
74107AN	.57	74S168N	5.79	74LS197N	1.14
74109N	.57	74S169N	5.79	74LS221N	1.16
74110N	.59	74S174N	1.25	74LS240N	1.16
74111N	.75	74S175N	1.25	74LS241N	1.16
74116N	1.56	74S181N	5.14	74LS242N	1.16
74120N	1.63	74S182N	2.20	74LS243N	1.16
74121N	.62	74S189N	5.79	74LS244N	1.16
74122N	.68	74S194N	2.18	74LS245N	2.15
74123N	.48	74S195N	2.18	74LS247N	.99
74125N	.62	74S201N	7.61	74LS248N	1.42
74126AN	.62	74S225N	6.44	74LS249N	1.25
74128N	.90	74S240N	3.84	74LS251N	.70
74132N	.59	74S241N	3.84	74LS253N	.70
74136N	.68	74S244N	3.84	74LS257N	.73
74141N	1.09	74S251N	1.55	74LS258N	.73
74142N	3.87	74S253N	2.54	74LS259N	1.68
74143N	4.47	74S257N	1.42	74LS260N	1.16
74144N	4.47	74S258N	1.42	74LS266N	1.47
74145N	.87	74S260N	1.27	74LS273N	1.19
74147N	1.61	74S274N	20.61	74LS275N	5.14
74148N	1.16	74S275N	20.61	74LS279N	.62
74150N	1.63	74S280N	2.57	74LS280N	1.98
74151N	.55	74S283N	3.84	74LS283N	1.01
74153N	.47	74S299N	7.61	74LS290N	.94
74154N	1.68	74S373N	3.87	74LS293N	.49
74155N	.52	74S374N	3.87	74LS298N	1.14
74157N	.62	74S381N	7.74	74LS299N	3.25
74159N	1.98	74S412N	3.87	74LS320N	3.58
74160N	.62	74S471N	8.39	74LS321N	5.14
74161AN	.83	74S472N	12.55	74LS322N	6.44
74162N	.83	74S474N	12.55	74LS323N	6.44
74163AN	.83	74S476N	7.74	74LS324N	3.25
74164N	.83			74LS348N	3.45
74165N	.83	74LS00N	.22	74LS352N	1.76
74166N	.88	74LS01N	.22	74LS353N	2.15
74170N	2.57	74LS02N	.29	74LS362N	12.94
74172N	6.44	74LS03N	.29	74LS365N	.68
74173N	1.03	74LS04N	.29	74LS366N	.68
74174N	.75	74LS05N	.29	74LS367N	.68
74175N	.75	74LS08N	.22	74LS368N	.68
74176N	.99	74LS09N	.31	74LS373N	1.63
74178N	1.42	74LS10N	.25	74LS374N	1.63
74179N	1.42	74LS11N	.31	74LS375N	.83
74180N	.98	74LS12N	.31	74LS377N	1.63
74182N	.63	74LS13N	.33	74LS378N	1.29
74184N	3.07	74LS14N	.51	74LS379N	1.42
74185N	3.07	74LS20N	.23	74LS390N	1.27
74190N	.88	74LS21N	.23	74LS393N	1.27
74191N	.88	74LS26N	.51	74LS395N	1.55
74192N	.88	74LS27N	.38	74LS447N	1.13
74193N	.83	74LS30N	.23	74LS490N	2.46
74194N	.83	74LS32N	.38	74LS630N	110.50
74195N	.60	74LS37N	.38	74LS669N	1.09
74196N	1.01	74LS38N	.38	74LS670N	2.13
74197N	.94	74LS42N	.57		
74198N	1.81	74LS47N	.88		
74199N	1.81	74LS48N	1.29		
74221N	.88	74LS51N	.27		

MINIMUM MAIL ORDER $10.00
Add $3.00 to cover postage and handling
PRICES ARE IN CDN. FUNDS. F.O.B. CANADA
Federal Sales Tax Incl.
Provincial Sales Tax Extra

LARGE INVENTORY AT ALL LOCATIONS

STORE HOURS:
Monday to Thursday 9:00 am — 6:00 pm
Friday 9:00 am — 9:00 pm
Saturday 9:00 am — 5:30 pm

VISA AND MASTER CHARGE ACCEPTED

5651 FERRIER ST.
MONTREAL, QUEBEC
H4P 2K5
Tel: (514) 731-7441

BAXTER CENTER
1050 BAXTER ROAD
OTTAWA, ONTARIO
K2C 3P2
Tel: (613) 820-9471

4800 DUFFERIN ST.
DOWNSVIEW, ONTARIO
M3H 5S9
Tel: (416) 661-1115

5809 MacLEOD TRAIL S.
UNIT 109
CALGARY, ALBERTA
T2H 0J9
Tel.: (403) 259-6437

3070 KINGSWAY
VANCOUVER, B.C.
V5R 5J7
Tel: (604) 438-3321

Active Component Sales Corp.

Circle No. 2 on Reader Service Card.