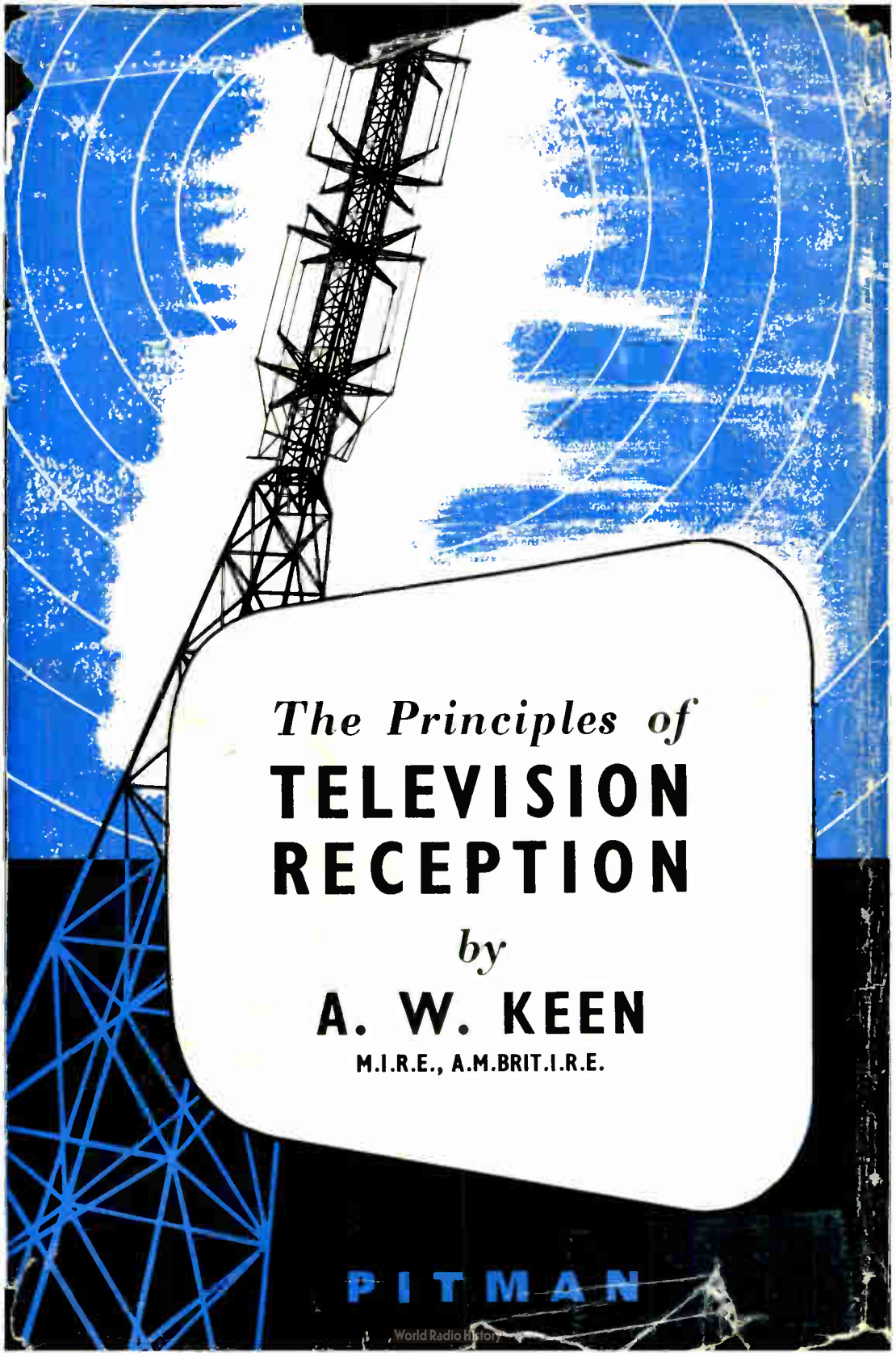

The Principles of TELEVISION RECEPTION

by

A. W. KEEN

M.I.R.E., A.M.BRIT.I.R.E.

PITMAN

THIS book provides technicians and service engineers with a qualitative introduction to the theory underlying the design of television receivers and will be useful to students taking any examination (e.g. C. & G., Brit.I.R.E.) of which the syllabus includes television principles. Both British and American practice are covered and all modern developments, including colour transmission, are given adequate treatment. The entire receiving system is thoroughly analysed in a logical sequence and complete circuit diagrams of four current commercial receivers are included. Special features are the considerable use of explanatory diagrams, avoidance of mathematics, and an extensive bibliography.

The author is a practising electronic research engineer and has had considerable experience of teaching modern electronic applications.

T.575

30/-
NET

THE PRINCIPLES OF TELEVISION RECEPTION

BY

A. W. KEEN

M.I.R.E., A.M.BRIT.I.R.E.

Formerly Research Engineer, R.F. Equipment, Ltd.
Sometime Chief Instructor, No. 8 Radio School, R.A.F.

LONDON
SIR ISAAC PITMAN & SONS, LTD.

First published 1949

SIR ISAAC PITMAN & SONS, LTD.
PITMAN HOUSE, PARKER STREET, KINGSWAY, LONDON, W.C.2
THE PITMAN PRESS, BATH
PITMAN HOUSE, LITTLE COLLINS STREET, MELBOURNE
27 BECKETTS BUILDINGS, PRESIDENT STREET, JOHANNESBURG

ASSOCIATED COMPANIES
PITMAN PUBLISHING CORPORATION
2 WEST 45TH STREET, NEW YORK
205 WEST MONROE STREET, CHICAGO

SIR ISAAC PITMAN & SONS (CANADA), LTD.
(INCORPORATING THE COMMERCIAL TEXT BOOK COMPANY)
PITMAN HOUSE, 381–383 CHURCH STREET, TORONTO

MADE IN GREAT BRITAIN AT THE PITMAN PRESS, BATH
D9—(T.575)

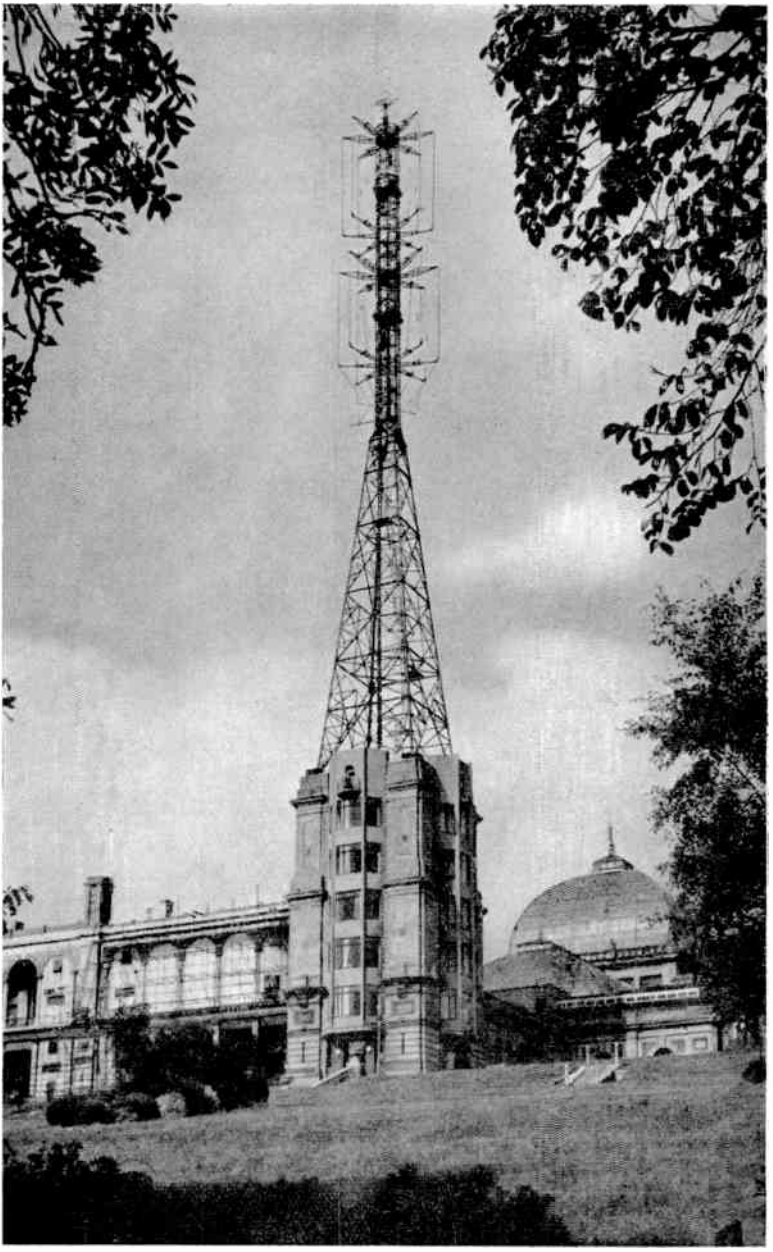

Frontispiece: THE AERIAL TOWER OF THE B.B.C. TELEVISION TRANSMITTER AT ALEXANDRA PALACE, NORTH LONDON

(*Courtesy of the B.B.C.*)

THE PRINCIPLES OF TELEVISION RECEPTION

To all those who have contributed to the art of Television and in so doing have made possible the writing of this book

PREFACE

SEVERAL years have passed since standards for high-definition cathode-ray television transmission were set up in this country and in the U.S.A., and although the war years have retarded progress, at least in a direct sense, the soundness of these standards has been proved by the satisfactory performance of normal commercial receivers. In view of the decision taken in both countries to resume transmissions on the pre-war standards, and of the prevailing economic situation, it seems unlikely that radical changes will be made in the transmission standards for some considerable time. It is felt, therefore, that television technique may be regarded as stabilized to an extent that justifies a systematic treatment of its basic principles, particularly in regard to reception, since receiving equipment is more likely to conform to a general pattern than transmitting equipment.

The urgent demand, by the engineers of a receiver manufacturer's servicing organization, for a lucid, descriptive treatment of reception principles (as distinct from the existing literature, which deals with television from a more specialized, advanced, or comprehensive point of view) was responsible for the production of this book in its original form—as a short correspondence course. With the present increase of interest in, and production of, television equipment, it is felt that the book may be of service to a wider field.

Accordingly, an attempt has been made to describe in clear, direct, and accurate terms, the principles underlying the technique of television reception. The treatment is qualitative and entirely non-mathematical, such mathematical aspects as are of fundamental importance being relegated to an appendix; it is, however, largely theoretical in that it does not deal primarily with practical details of design or servicing. Since interest is centred on principles it is logical to have dealt to some extent with American technique, and it is hoped that

the selection of examples of circuit design for both standards will provide a better understanding of the art generally without leading to confusion.

The book may be divided into four parts, as follows—

(i) A general outline of the complete television process (Chapter I) as standardized here and in the U.S.A., for monochromatic reproduction; this brings out the more advanced nature of television technique by comparison with ordinary sound broadcasting and justifies the reinterpretation and extension of basic signal and circuit theory given in Chapter II.

(ii) Stage-by-stage examination of the complete receiver working in conformity with established design and servicing procedure, from the picture tube and its auxiliaries (Chapter III) through the scanning (Chapter IV), synchronizing (Chapter V), and signal (Chapter VI) circuits to the vision receiver input. These chapters are followed by a review of methods of receiving the sound signal (Chapter VII) and in the succeeding chapter (VIII) several complete circuit schematics of commercial receivers in current use are described in order to coordinate details given in the preceding chapters.

(iii) A description of the receiver accessories, namely the aerial system (Chapter IX) and test equipment (Chapter X).

(iv) A review of the problem of television transmission in natural colour, followed by an account of the two basic methods demonstrated to date.

Each chapter includes a selection of suitable references which, together with the general guidance presented in Appendix II, introduce the reader to the general literature and facilitate further study.

Particular care has been taken with terminology; the British usage has been preferred where variation exists and a list of equivalent terms has been provided for the benefit of American readers. (See p. xv.)

In view of the modern preference for the terms "resistor" and "capacitor" I have felt it desirable to adopt "inductor" and reserve "coil" for actual windings only. Since a practical "coil" may in fact consist of several windings on a built-up

magnetic core and enclosed in a screen such a distinction would appear to be justified, and while this decision may be questionable in the case of scanning and focusing "coils," it has the merit of allowing consistent use of resistor, capacitor, and inductor, which practice is becoming more general both here and in the U.S.A.

The book is published by kind permission of my former employers, R.F. Equipment, Ltd., of Langley Park, Bucks.

I am fortunate in having worked under such pioneers as Messrs. O. S. Puckle and W. H. Stevens and am deeply grateful to the many members of the television and service departments of Sobell Industries, Ltd., who co-operated in producing the original MS. In rewriting and expanding the latter I have been fortunate in obtaining a great deal of information from commercial firms in this country and in the U.S.A.; these organizations are listed on p. x.

I am grateful to Mr. D. Clatworthy for assistance with the drawings.

I would be glad to receive (through the publishers) notice of errors and suggestions for improving the text.

In conclusion I would like to acknowledge the tremendous amount of help and encouragement from my wife Barbara, but for whom the book could not have been written.

A. W. KEEN

HARROW
December, 1947

ACKNOWLEDGMENTS

The following organizations have supplied information, as acknowledged in the text, and the author is grateful for the co-operation extended by their representatives—

Belling & Lee, Ltd.
British Broadcasting Corporation
Cathodeon, Ltd.
Edison Swan Electric Co., Ltd.
E. K. Cole, Ltd. ("Ekco")
Electrical and Musical Industries (E.M.I.), Ltd.
Electrical and Radio Trading
Electronic Engineering
Endeavour (I.C.I., Ltd.)
General Electric Co., (U.S.A.)
Haynes Radio, Ltd.
Institute of Radio Engineers (U.S.A.)
Marconi Instruments, Ltd.
Murphy Radio, Ltd.
Philco Corporation (U.S.A.)
Pye, Ltd.
Radio Corporation of America
R.F. Equipment, Ltd.
Sobell Industries, Ltd.
The Gramophone Co. (H.M.V.)
Westinghouse Electric Corp. (U.S.A.)
Wireless World

CONTENTS

CHAPTER III

The Picture Tube and its Auxiliary Circuits

CHAPTER IV

The Scanning Circuits (Time Bases)

CHAPTER V

The Synchronizing Circuits

CHAPTER VI

The Video Signal Circuits

CHAPTER VII

The Sound Channel

CHAPTER VIII

The Complete Receiver

CHAPTER IX

The Receiving Aerial System

TABLE OF EQUIVALENT BRITISH AND AMERICAN TERMS

British[8]	*American*
aerial	antenna
anode	plate
camera[1]	pick-up tube
changer[2]	converter[2]
definition	resolution
d.c. restorer	d.c. (re)inserter (clamp)
diagram	schematic[1]
differentiator[1]	sharpener
earth	ground
frame (*noun*)[3]	field[3]
(*adj.*)[4]	vertical[1]
flyback	retrace[1]
limiter[1]	clipper
line (*noun*)	line
(*adj.*)[4]	horizontal[1]
mains	line
masking[7]	blanking
picture[3]	frame[3]
polar diagram	radiation pattern[1]
scan	sweep[1]
sound	audio, aural[1]
time base	sweep circuit
tube	Kinescope[5]
Thyratron[6]	gas triode
valve	tube
vision	video[1]

(1) Often used in the other country.
(2) Of superhet receiver.
(3) THIS DIFFERENCE MUST BE CAREFULLY OBSERVED.
(4) With reference to pulses.
(5) Trade name (R.C.A.).
(6) Trade name (B.T.-H.).
(7) Also used in U.S.A. for spurious camera signal.
(8) See British Standard 204 : 1943, § 5.

CHAPTER I

AN OUTLINE OF THE TELEVISION PROCESS

By the commencement of the late (1939–45) war television broadcasts, ranging from irregular commercially sponsored transmissions to regular public broadcasts, were being made in several countries, notably Great Britain, U.S.A., Germany, and France. Even before that date some degree of uniformity had appeared in methods of transmission and, but for the outbreak of war, it is probable that the existing transmissions would have been carried on for some time without major changes, to allow the number of viewers to multiply sufficiently to warrant and support future development. The latter process has been delayed by the length of the war but since 1945 most of the pre-war stations have resumed operation and are serving a steadily increasing number of viewers. A significant fact is the universal decision to continue transmission on the existing standards.

1.1. The Present Position of Television. The present position is that television in "monochrome" (black and white) by the high-definition cathode-ray process,[1, 2]* as distinct from the variety of earlier low-definition mechanical methods, is now an established practice, varying only in detail, in several countries, and it seems reasonable to expect that future developments will be achieved by extension of the existing method.[7] Nevertheless, while television, particularly in its receiving aspect, has crystallized to the extent of justifying the present treatment, it remains a comparatively new art by comparison with ordinary broadcasting and radically new techniques may well arise as development proceeds.

Apart from its intrinsic interest the entire television process must be understood at least in general outline before an intelligent study of receivers can be attempted. Moreover,

* Numeral superscripts in parentheses denote references at end of chapter.

reception is but a part of the complete process and it has been attempted (in the formulation of transmission standards) to make it as simple and independent as possible in relation to the remainder of the system. In the following sections the technique will be described step by step from the camera at the transmitter to the cathode-ray tube on which the scene viewed by the camera is reconstituted at the receiver. This description will be particularly useful to the service engineer not only in assisting differentiation between receiver and very occasional transmitter faults but in understanding the purpose and action of the special test equipment (e.g. pattern generators) required. It will be assumed that the reader has a comparable knowledge of ordinary broadcast receivers, and this knowledge will be used as a starting point and drawn upon frequently throughout the book.

1.2. The Problem of Picture Transmission. It is not often realized that there are certain imperfections in ordinary sound broadcasting. Consider, for example, the acoustic input to the microphone in the studio when a large orchestra is "on the air." Sound is received over a wide solid angle and over varying distances from the large number of instruments comprising the orchestra. Most of the instruments differ from each other in type and/or position, so that each represents a distinct source of sound of characteristic quality and changing continuously in pitch and intensity. The resultant sound pattern upon the microphone is evidently extremely complex. It will be noted, however, that no recognition is taken of the spatial distribution of the orchestral instruments or of the binaural (i.e. involving two ears) character of human listening, while it is necessary that the volume range be compressed to facilitate transmission. Fortunately the ear is not too critical of these factors and since the modern microphone is capable of interpreting with reasonable fidelity the resultant output of the entire orchestra, the music reproduced at the receiver is generally regarded as being satisfactory.

It will be convenient to approach the problem of picture transmission in a similar manner to that adopted in the previous

paragraph. The place of the microphone will now be taken by a camera whose purpose is to produce an electronic image of the scene before it. This scene will be viewed by the camera as a three-dimensional distribution of point sources of light (cf. the separate instruments forming the orchestra) which differ in distance and angle from the camera lens; moreover, each "point source" will be characterized by the colour and intensity of the light it transmits (by reflection, direct radiation, or otherwise). In a still picture or scene this impression will remain unchanged; in practice, of course, the actual scene will vary in some or all respects, and more or less rapidly, throughout the programme.

This brief analysis of the picture will be sufficient to bring out the much greater difficulty of picture transmission by comparison with ordinary broadcasting. It is not sufficient merely to transmit an electrical equivalent of the varying resultant light intensity of the entire scene, but an equivalent for each point in the scene has to be transmitted separately, together with sufficient information regarding the relative positions of these separate picture "elements," in order that the picture may be correctly reproduced at the receiver. The eye is so much more critical than the ear that no liberties can be taken in this process; on the other hand, it is the "persistence of vision" property of the eye that makes television practicable. At present regular transmissions, such as that of the B.B.C. from Alexandra Palace, are "monochromatic" (in black and white) and two-dimensional, and it is unlikely that colour or stereoscopic (three-dimensional) broadcasts, other than existing experimental transmissions, will be made for a considerable time.

1.3. The Action of the Electronic Camera. The initial process in television is the production of an electrical image of the scene to be transmitted. This is achieved in an electron camera using, basically, the well-known photo-electric effect, i.e. the property possessed in marked degree by certain metals, notably caesium, of emitting electrons under the influence of incident light. It will be remembered that the number of electrons

emitted, for a given light frequency is proportional to the light intensity, but that the photo-electric sensitivity varies with frequency. Thus while the photo-electric effect provides a suitable means of converting variations in light intensity into electrical equivalents, care must be taken in the choice of the photo-electric material since its sensitivity must extend with reasonable constancy through the entire visible spectrum.

Modern cameras are derivatives of the original "Iconoscope" of V. K. Zworykin (R.C.A.)[10] and a similar tube called the "Emitron" which was developed concurrently in this country by J. D. McGee, of E.M.I. Research Laboratories.[12] These early tubes, which are still in use, will be taken to provide an example of camera action in view of their simplicity by comparison with more recent developments.

Referring to Fig. 1.3A it will be seen that an optical lens system is employed to set up a sharply defined image of the scene viewed by the camera, in the plane of a mosaic of photo-sensitive particles mounted on a mica plate inside the evacuated camera bulb. The particles may be regarded as tiny photo-cell cathodes. They are, of course, electrically insulated from each other, but have a common "anode" plate, carried on the reverse side of the mica, which is connected to a terminal on the envelope to allow connection to the external load resistor. The light focused on the mosaic causes each particle to emit in proportion to the intensity of the portion of the image falling upon it, so that a film of electrons ("space charge"), varying in density from point to point in correspondence with the light intensity of the picture image, is formed over the entire mosaic surface.

The long cylindrical extension of the camera bulb houses an electrostatic gun which projects a fast-moving finely focused electron beam on to the mosaic. Two pairs of inductors are placed around the gun neck at the bulb and when current is passed through them the resultant magnetic field set up inside the neck, i.e. in the path of the beam, causes the beam to bend and strike the mosaic at a different point. One inductor pair deflects the beam horizontally, the other vertically, so that by

passing regularly varying currents of suitable shape through them the beam is made to pass systematically over the whole mosaic surface. At this stage it is not necessary to understand the mechanism of the gun or the deflection system, since interest

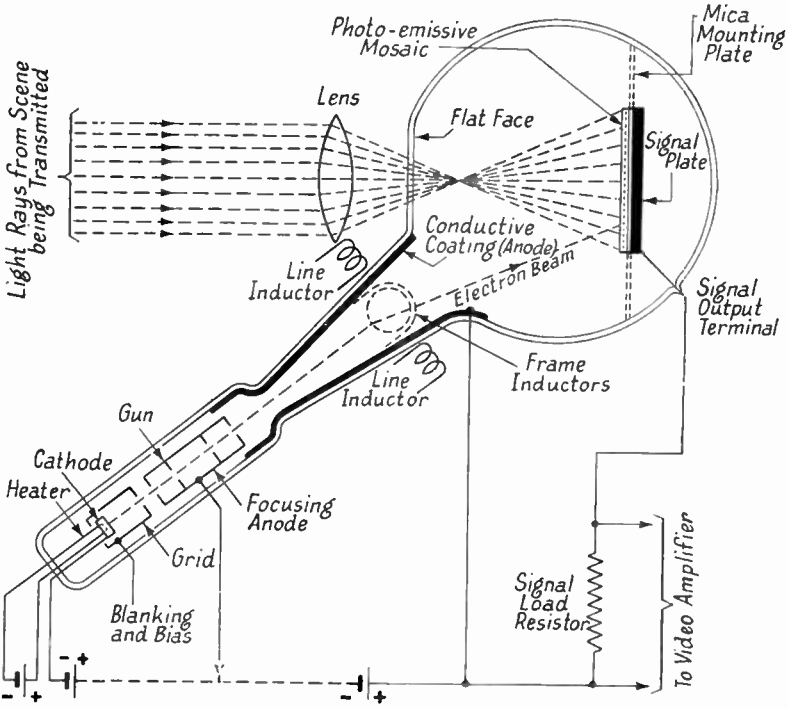

FIG. 1.3A. CROSS-SECTIONAL DIAGRAM OF THE EMITRON CAMERA
(*Courtesy E.M.I., Ltd.*)

is centred upon the method of producing the electrical signal representing the picture.

The action occurring at the mosaic surface under the effect of the moving electron beam is actually quite complex, largely because of secondary emission at the point of impact. The conventional simple explanation is as follows—

At the point of impact of the beam the photo-electric emission in the vicinity is neutralized and since each particle forms a small capacitor with the signal plate any change of potential of the particle is accompanied by a corresponding potential

change in the plate and therefore by a current change in the load resistor. Thus, as the beam travels across the mosaic the load resistor current fluctuates in sympathy with the varying density of the mosaic emission and, therefore, with the amount of light received point by point from the scene being transmitted. It is preferable to regard the moving beam as a device

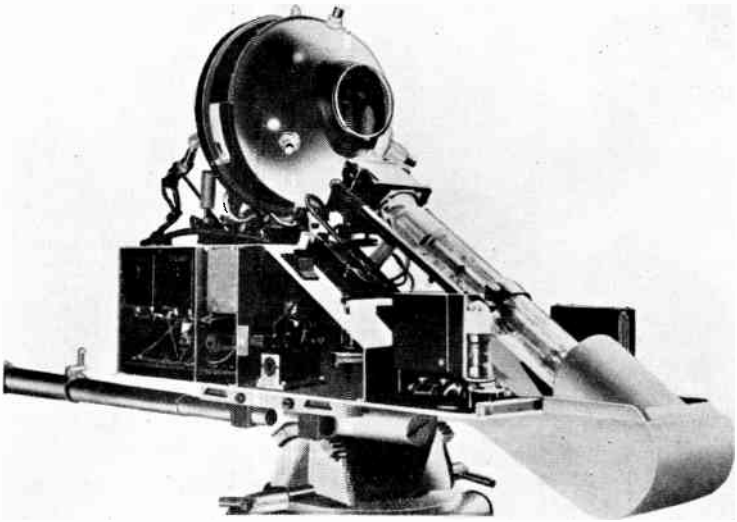

FIG. 1.3B. THE EMITRON CAMERA WITH COVER REMOVED
(*Courtesy E.M.I., Ltd.*)

for releasing electrons point by point over the mosaic and the light from the image as modulating the otherwise uniform secondary emission. Photographs of an "Emitron" camera, a B.B.C. camera crew in action in the studio and an American studio are shown in Figs. 1.3B, 1.3C and 1.3D respectively.

An important feature of the camera just described is that each mosaic element is allowed a relatively long "recovery" period between successive sweeps of the electron beam and is therefore able to respond fully to the incident light, although this beneficial "storage effect" is considerably offset by a random ("masking") signal (called "noise") which is always present in the output and is independent of the incident light.

FIG. 1.3C. AN EMITRON CAMERA CREW IN ACTION AT THE ALEXANDRA PALACE STATION OF THE B.B.C.

FIG. 1.3D. THE CONTROL ROOM IN THE STUDIOS OF G–E TELEVISION BROADCASTING STATION WRGB, IN SCHENECTADY, N.Y.

In the foreground is the programme producer; centre, the camera monitoring desk; and background, view of part of the studio.
(Courtesy of the General Electric Co. (U.S.A.)

Improved "signal-to-noise" ratio and storage efficiency have been achieved in developments of the basic design,[16] firstly, by using secondary emission multipliers to intensify the output signal (R.C.A.'s Image Multiplier Iconoscope[13]; E.M.I.'s "Super-Emitron[12]) and secondly, by using a low-velocity scanning beam to minimize the ill-effects of secondary emission (the "Orthicon"[14]). Both methods are combined in the

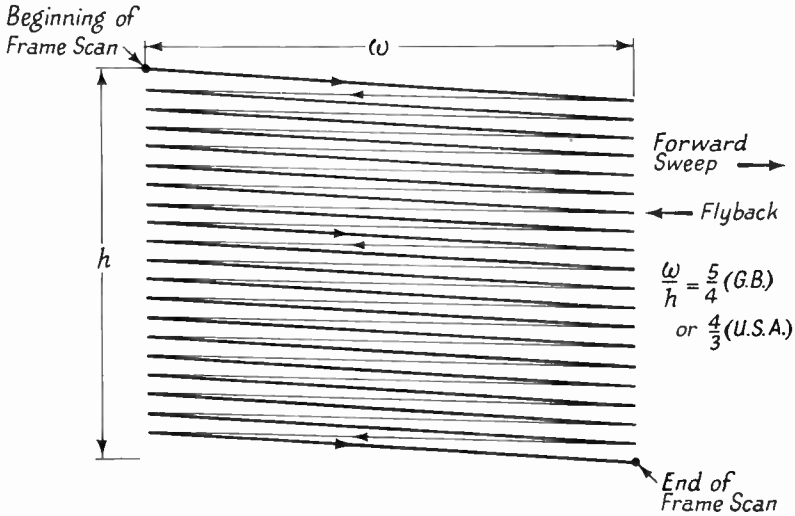

FIG. 1.4A. THE ACTIVE DOWNWARD PORTION OF A SIMPLE SEQUENTIAL OR PROGRESSIVE SCAN

"Image Orthicon,"[15] whose design has also been influenced by an earlier tube, somewhat different from the iconoscope, known as the "Image Dissector," which was developed by P. T. Farnsworth (U.S.A.).[11]

1.4. The Scanning Process. It has been pointed out (§ 1.1) that television involves not only the transmission of the electrical equivalent of light and shade but the separate treatment of each point in the picture; this difference is the principal one between the techniques of television and ordinary broadcasting. The pictures must be broken into small elements and transmitted piece by piece, moreover the degree of subdivision must be very great to achieve satisfactory "definition." This process is known as "scanning" and may be simply explained

with reference to Fig. 1.4A, where the path followed by the beam in scanning the whole mosaic is shown. Starting at the top left-hand corner the beam is made to travel (nearly) horizontally and at constant speed to the opposite corner; it is then brought back at a much greater speed. These two sweeps are called the "line scan" and "line flyback" respectively. While they are taking place vertical deflection is applied in a similar manner, i.e. the beam is moved comparatively slowly, but at constant speed, downwards (the "frame scan"). The overall result is the zig-zag path, called a "sequential scan," shown in the figure. When the bottom of the mosaic is reached the vertical deflecting force reverts quickly to its original value (the "frame flyback"). The process is then repeated.

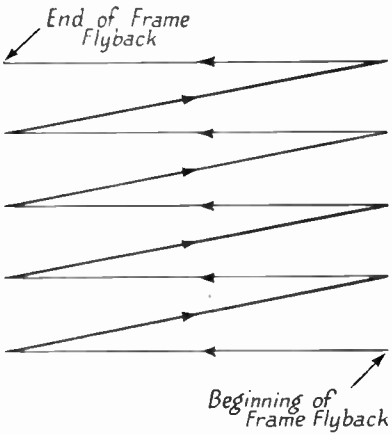

FIG. 1.4B. THE INACTIVE UPWARD FLYBACK (RETRACE) OF THE SEQUENTIAL SCAN

By this method every point of the mosaic is scanned once per cycle and at any given instant the signal output represents the intensity of one point only of the picture. It will be clear that provided successive line scans fall sufficiently close together the picture detail will be completely transmitted. Again, provided the complete process is repeated sufficiently rapidly, persistence of vision in the eyes of the viewer at the receiving

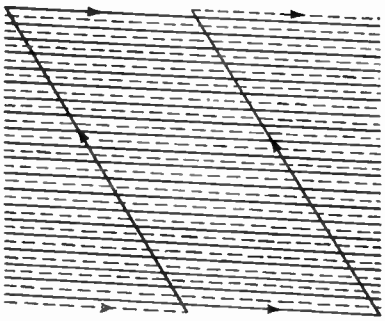

FIG. 1.4C. THE DOWNWARD (ACTIVE) PORTION OF THE INTERLACED SCAN

Note that the frame flybacks are simplified. (see Fig. 1.4D).

end will completely restore continuity and obscure the fact that the picture is actually being reproduced piece by piece.

The generation of "reversed" signals during the flybacks is prevented by cutting off the electron beam while the deflection fields reverse in polarity. The video signal amplifier is also suppressed ("blanked," or "masked") during the same period in order to prevent modulation of the transmitter by signals arising in this or any other manner early in the camera-transmitter chain. The flyback traces shown in Figs. 1.4B and 1.4D therefore represent the action of the deflection fields rather than the actual movement of the beam. It is usual to allow the frame flyback a much longer period than the line flyback, and since it is undesirable to interrupt the line deflection current the result is the zig-zag frame flyback shown in the figures.

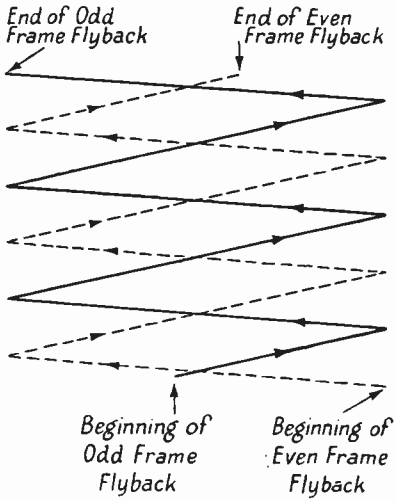

FIG. 1.4D. THE UPWARD FLYBACK (RETRACE) OF THE INTERLACED SCAN

In both British and American systems there is an important complication in the scanning process; alternate frames are displaced by one-half of the separation between adjacent lines, thus producing two sets of scans (called "odd" and "even") which exactly mesh, interleave, or "interlace" (Figs. 1.4C, 1.4D). The advantage of interlacing is that it allows flicker to be reduced without increase in bandwidth by comparison with an equivalent normally scanned picture, as will be made clear in § 1.5. It will be understood from Figs. 1.4C, 1.4D that interlacing may be achieved simply by initiating the frame flyback alternately at the half-way point and at the end point in the last line of successive frames provided that the ratio of the line frequency (for the entire picture, i.e. one odd scan

plus one even scan) to the frame frequency is an integer plus one-half; for example, $10{,}125/50 = 202\frac{1}{2}$ in the British standard. In Figs. 1.4C, 1.4D each vertical scan comprises twenty full horizontal scans plus a half-line in the flyback so that one complete cycle contains $2 \times 20\frac{1}{2} = 41$ lines.

It will be helpful at this stage to provide typical numerical values for actual interlaced scanning patterns of the type just discussed; these are given in Table I, on a comparative basis, for both British and American systems.

TABLE I: SCANNING PATTERN CONSTANTS FOR BRITISH AND AMERICAN SYSTEMS

Parameter	British Standard	American Standard
Ratio of picture (frame) width to height	5 : 4	4 : 3[1]
No. of lines per picture (frame)	405	525
No. of frames (fields) per picture (frame)	2	2
No. of lines per frame (field)	$202\frac{1}{2}$	$262\frac{1}{2}$
No. of pictures (frames) per second	25	30
No. of frames (fields) per second	50	60
No. of lines per second	10,125	15,750

Notes: (1) Same as for cinema (motion) pictures.
(2) Terms in brackets are American equivalents.

1.5. The Video-frequency Signal. The method of scanning just described sets a limit to the degree of vertical definition (amount of detail), because of the limited number of scanning lines employed. The definition obtainable in the horizontal direction (i.e. along the lines) is greater than in the vertical direction and depends on the effective overall frequency response of the entire system.

It is necessary, of course, to have some criterion of the maximum frequency contained in the "video" (i.e. picture) signal and a useful approximation is provided by the "picture element" concept. This is obtained by imagining the scanning lines to be subdivided horizontally to the same extent that the picture is split up in the vertical direction by the scanning process. Taking the British figures as an example, the correct picture width has been fixed at 1·25 times the height (we speak of an "aspect ratio of 5 to 4"); accordingly each line is

regarded as consisting of $1{\cdot}25 \times 405$ elements. Assuming* that all lines are modulated by picture signal (actually a number have to be reserved for synchronizing purposes) each picture will contain $1{\cdot}25 \times 405 \times 405 = 205{,}031{\cdot}5$ elements which have all to be transmitted in $\frac{1}{25}$ sec, i.e. at the rate of $205{,}031{\cdot}5 \times 25 = 5{,}125{,}787{\cdot}5$ per sec. If adjacent elements are black and white the resultant video signal will be a square wave of frequency $\frac{1}{2} \times 5{,}125{,}787{\cdot}5 = 2{,}562{,}893{\cdot}75$ c/s $= 2{\cdot}563$ Mc/s (note, each element produces *one half-cycle* of the square wave). The corresponding figure for the U.S. system is 5·513 Mc/s. The maximum useful bandwidth in the receiver is set by the effective size of the scanning spot of the picture tube; usually this can be made sufficiently small to justify a bandwidth somewhat greater than the estimate just derived, even in the American case.

This result indicates that in order to take full advantage of a given number of lines in the scanning pattern the entire television system from transmitter camera to receiver picture tube must be capable of handling modulation frequencies up to a corresponding minimum figure. Even in the case of 405 lines per picture (frame) this *modulation* frequency (2·563 Mc/s) is greater than the *carrier* frequency of any broadcast station in the medium-wave band (550 to 1600 kc/s, U.S.A.; 550–1500 kc/s Europe). Again, the carrier frequency of the television transmitter is amplitude modulated (double sideband, G.B.; single sideband, U.S.A.) by the video signal, so that the bandwidth occupied by the R.F. signal is at least $2 \times 2{\cdot}563 = 5{\cdot}126$ Mc/s (or $1 \times 5{\cdot}513$ Mc/s), i.e. over five times the width of the M.W. broadcast band. The video carrier must therefore be sufficiently high in frequency not only to accommodate satisfactorily the wide modulation-frequency band but to avoid interference from existing facilities. As a result, frequencies over 40 Mc/s are used and these have a reliable range that is of the order of tens of miles only. It will be understood now that interlacing allows a sufficiently high frame (field)

* This assumption does not affect the equivalent fundamental frequency of the pattern, although, in making the calculation, it is usual to take the number of active lines without making a corresponding reduction of transmission time.

frequency to eliminate frame flicker without increasing the degree of definition of the complete picture; in fact, in the approximate calculation of the minimum fundamental modulation frequency just given it was permissible to ignore the interlacing complication.

1.6. Reconstruction of the Picture at the Receiver. It will be understood that the electrical representation of the picture

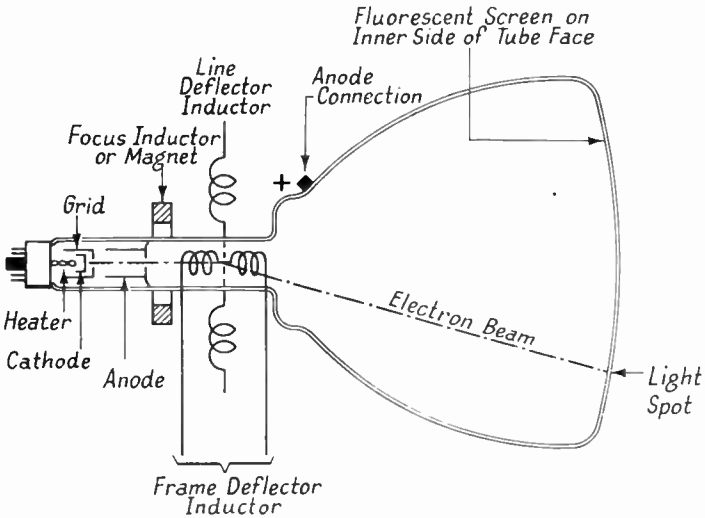

FIG. 1.6A. THE RECEIVER CATHODE-RAY PICTURE TUBE
(Note that all inductors are outside the tube—their arrangement is shown schematically.)

produced by the camera may be transmitted by radio in the same manner as the microphone signal in ordinary broadcasting. In the vision receiver the video signal will reappear at the demodulator output and, usually after amplification, it is applied to a type of cathode-ray tube specially designed for television reception. The simple cross-sectional drawing in Fig. 1.6A will be sufficient at this stage to show how the picture seen by the camera is recreated. The cathode-ray tube consists essentially of an electron gun and deflector systems similar to that used in the camera (cf. Fig. 1.3A) and the finely focused electron beam produced is directed on to a thin layer of fluorescent material carried on the inner surface of the flat

face of the large bulb opposite the gun neck. This fluorescent screen produces white light at the spot struck by the beam, which light passes through the screen and tube face to the viewer. The intensity of the light spot is (ideally) proportional to the intensity of the electron beam so that if the video signal is used to modulate the beam and the latter made to scan the fluorescent screen in exactly the same manner as in the camera, then a reproduction of the original scene will appear on the tube face. In the absence of a signal a rectangular area of uniform brightness is produced; this is called the "raster."

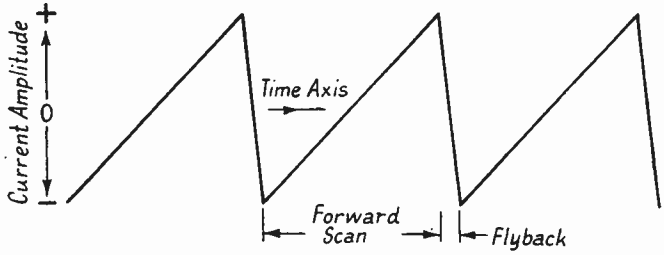

FIG. 1.6B. WAVEFORM OF THE SCANNING-INDUCTOR CURRENTS USED FOR BEAM DEFLECTION IN THE TRANSMITTER CAMERA AND THE RECEIVER CATHODE-RAY TUBE

The intensity modulation of the electron beam is achieved by applying the video signal to a modulator grid placed between the tube cathode and accelerator electrode(s); in this respect the action of the gun is similar to that of the ordinary amplifier valve in which anode current (beam current) is controlled in strength (intensity) by the grid (modulator). The deflection currents for the scanning inductors are generated in "time-base" circuits contained in the receiver. Two such circuits are required; each produces a current of sawtooth waveform (see Fig. 1.6B), one for line scanning and the other for frame scanning. In most time-base circuits (line and frame) a sawtooth oscillator is used to drive a current of similar waveform through the output stage, which has the deflector inductors coupled to its anode circuit. These points will be treated in some detail in subsequent chapters, since it will be necessary now to introduce the question of synchronism between the two ends of the television chain.

1.7. Synchronizing the Transmitter and Receiver. The foregoing outline of the methods adopted to convert, transmit, and recreate the picture should make quite clear the need for synchronism between transmitter and receiver. When the beam in the cathode-ray tube at the receiver is traversing any given point in its scanning field the instantaneous value of the modulating voltage (video signal) applied to the tube grid must correspond to the signal output of the transmitter camera at the instant when the beam in the latter is covering the same picture point. Time delay over the whole system is immaterial provided that it remains constant throughout the picture; the actual delay is, of course, extremely small. The essential requirement is the *correspondence* between the instantaneous scanning spot position and the signal voltage at the receiver.

The method adopted to ensure synchronism is quite positive and relatively simple in principle. Each time base in the transmitter camera system (i.e. one driving the line scanning inductor, the other feeding sawtooth current to the frame inductor) is locked to a square-pulse generator (the first running at line frequency, the second at frame frequency). The same locking pulses are mixed with the video signal, which is cut-off ("blanked") while each synchronizing pulse occurs so that the locking pulses are transmitted on the same carrier wave. At the receiver these synchronizing pulses are, after the composite video signal emerges from the demodulator, separated from the picture signal. The two kinds of synchronizing pulse, "narrow" (i.e. of short duration) for line synchronization and "wide" for frame synchronization are then separated and fed to the appropriate time-base circuit to lock its sawtooth oscillator. By this method the receiver time bases are kept running at exactly the same frequency as their opposite numbers in the camera circuits and the flybacks correctly timed so that the modulation applied to the receiver C.R.T. grid is correctly phased point by point throughout the receiver scan.

1.8. The Composite Video Signal. The picture modulation, representing instantaneous point-by-point variations of light intensity or brightness occurring in the actual scene viewed

by the camera, is rendered distinct from the pulses required for synchronizing purposes by allotting to each a restricted portion of the amplitude range of the carrier. In the British method the lower amplitude range of 0–30 per cent is reserved for the synchronizing signal, and the upper portion represents increasing brightness, from zero brightness, i.e. "black," at 30 per cent, to full brightness, called "white," at 100 per cent, i.e. maximum carrier amplitude. It should be understood that in monochromatic transmission the latter range does not represent colour variation but variation in intensity of white from zero up to a maximum. The Americans prefer the upper range of amplitudes for synchronization in order to reduce the effects of ignition interference on the picture. This inversion causes the interfering pulses to drive the cathode-ray tube towards black and are thereby rendered less offensive to the eye than in the other case. On the other hand, the interference has a much worse effect on receiver synchronism. Black still represents the dividing line between the synchronizing and picture signals and is set at 75 per cent; maximum received picture brightness occurs at zero carrier signal amplitude.* The two methods of modulation differ only in polarity, the first is therefore termed "positive" modulation and the second "negative" modulation. The synchronizing portion of the signal remains unchanged throughout the frame scan but the picture signal will, of course, vary from instant to instant and will not necessarily reach full black or full white in every line, as shown in Fig. 1.8A.

There are two minor features of the waveform under consideration whose significance will be better appreciated later. The picture signal is actually masked for a longer period than the duration of the line synchronizing pulse. In the British standard it is cut off approximately $\frac{1}{2}$ micro-second (actually 0·005 of one line period) before the pulse begins and not restored until approximately 5 micro-seconds (actually 0·05 of one line period) after the end of the pulse. The corresponding American figures are 0·02 and 0·14 of one line period. As a result two

* In practice the carrier minimum (peak white) is about 5 per cent of the maximum.

small steps or "pedestals" appear at black level, one on either side of each line pulse; they are called the "front porch" and

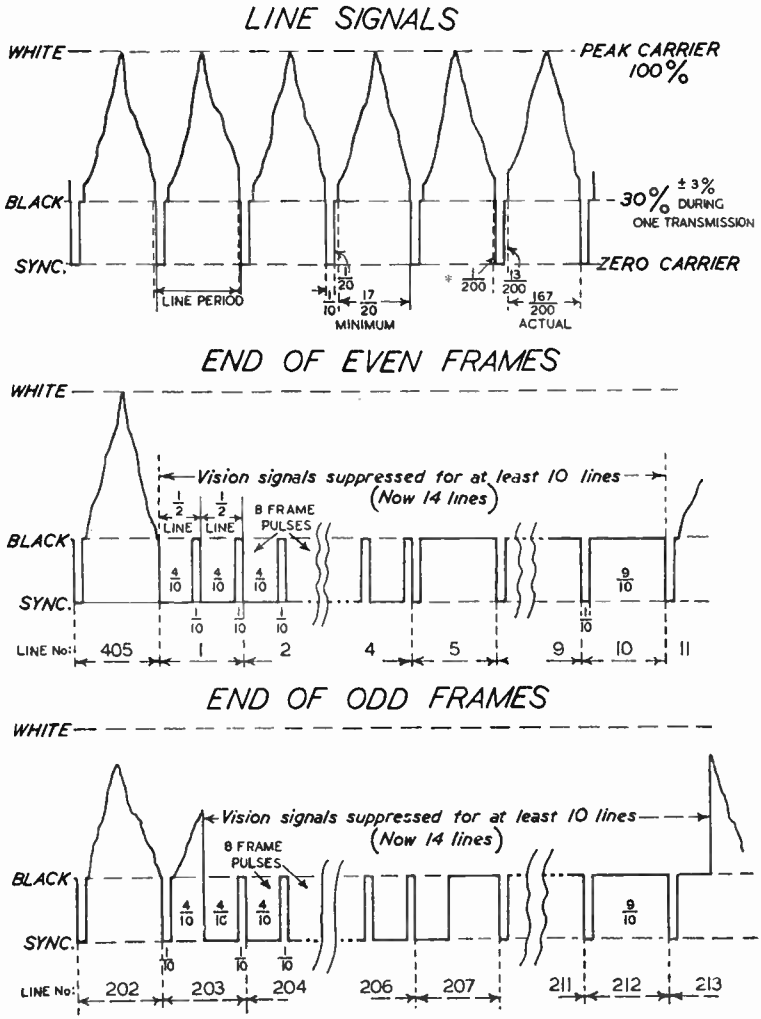

FIG. 1.8A. THE STANDARD FORM OF THE BRITISH TRANSMISSION
(*Courtesy of "Electronic Engineering"*)

"back porch" respectively, by the Americans. The first is inserted to give the receiver circuits time to return to black level before the synchronizing pulse commences, even when

FIG. 1.8B. THE AMERICAN STANDARD SYNCHRONIZATION SIGNAL WAVEFORM

(From the F.C.C. "Standards of Good Engineering Practice")

1. H is time from start of one line to start of next line.
2. V is the time from the start of one field to the start of the next field.
3. Leading and trailing edges of vertical blanking should be complete in less than $0{\cdot}1H$.
4. Leading and trailing slopes of horizontal blanking must be steep enough to preserve minimum and maximum values $(e + f)$ and (j) under all conditions of picture content.
5. Dimensions marked with an asterisk indicate that tolerances given are permitted only for long-time variations and not for successive cycles.
6. For receiver design, vertical retrace should be complete on $0{\cdot}07V$.
7. Equalizing pulse area shall be between 0·45 and 0·5 of the area of a horizontal synchronizing pulse.

the extreme edge of the picture is full white. The second pedestal puts a black border on the left-hand side of the received picture which provides a brightness reference level.

The distinction between the two kinds of synchronizing pulse, which have to be separated at the receiver, is done on a width basis. Pulses of square shape are preferred in both cases because their vertical edges represent definitely the important instants at which the receiver time bases need to be triggered, i.e. at which the scan flybacks must be initiated. The line-synchronizing pulses represent a simple wave, but the fact that they must be continued throughout the comparatively long-frame synchronizing signal makes the latter rather complex. It consists of a train of pulses much wider than those employed for line synchronization, in order to allow separation in the receiver, and having twice line repetition rate. A significant feature of the British framing signal is the difference ($\frac{1}{2}$ line) between alternate frames in the length of the last active line of the picture. The effect of this undesirable irregularity (Chapter V) is eliminated in the American signal, at the cost of complicating even further the complete framing signal, by inserting a group of "equalizing" pulses before and after the actual framing pulse train. The framing signal parameters for the two standard signals are given in Table II

TABLE II: SYNCHRONIZING SIGNAL CONSTANTS FOR THE BRITISH AND AMERICAN SYSTEMS

Parameter	British Standard	American Standard
Duration of line pulse	$0{\cdot}1H$*	$0{\cdot}08H$
Duration of pedestal preceding line pulse	$0{\cdot}005H$	$0{\cdot}02H$
Duration of pedestal following line pulse	$0{\cdot}05H$	$0{\cdot}14H$
Number of framing pulses	8	6
Number of lines occupied by framing pulses	4	3
Repetition rate of framing pulses (per sec)	20,250	31,500
Duration of framing pulse	$0{\cdot}4H$	$0{\cdot}43H$
Duration of a serration between successive framing pulses	$0{\cdot}1H$	$0{\cdot}07H$
Number of equalizing pulses per train	—	6
Number of lines occupied by equalizing pulses	—	$3{\cdot}2 \times 2$
Repetition rate of equalizing pulses	—	31,500 per sec
Duration of equalizing pulse	—	$0{\cdot}04H$

* Duration of line period (H) 1/10,125 sec, 1/15,750 sec.

and the waveforms in Figs. 1.8A and 1.8B. These will be discussed in detail later in connection with the receiver synchronizing circuits (Chapter V). It will be noted that the framing signal is followed by a number of unmodulated (i.e.

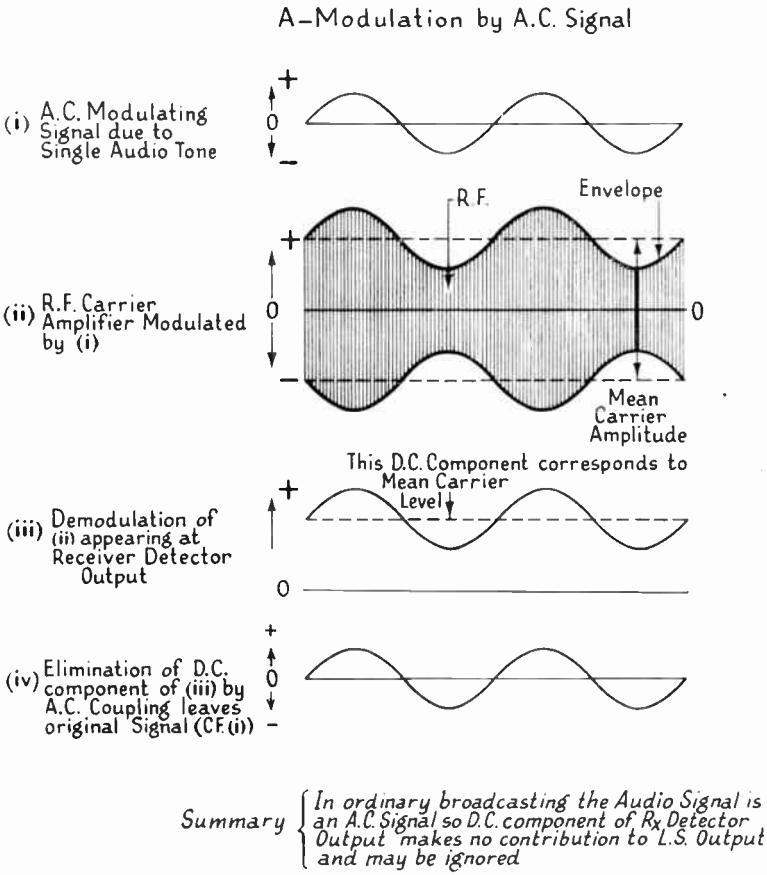

FIG. 1.9A. MODULATION AND DEMODULATION—A.C. MODULATION SIGNAL

black) lines, since the picture signal must not reappear until the frame flyback is complete.

1.9. D.C. Modulation: Brightness Level. The waveforms of Figs. 1.8A and 1.8B apply not only to the video signal before modulation at the transmitter, and after demodulation at the receiver, but also to the envelope of the R.F. carrier. This

fact raises an important difference between television and ordinary broadcasting. In the latter the mean carrier level is held constant and the envelope swings equally (up and down) about this fixed level; the demodulator output. therefore,

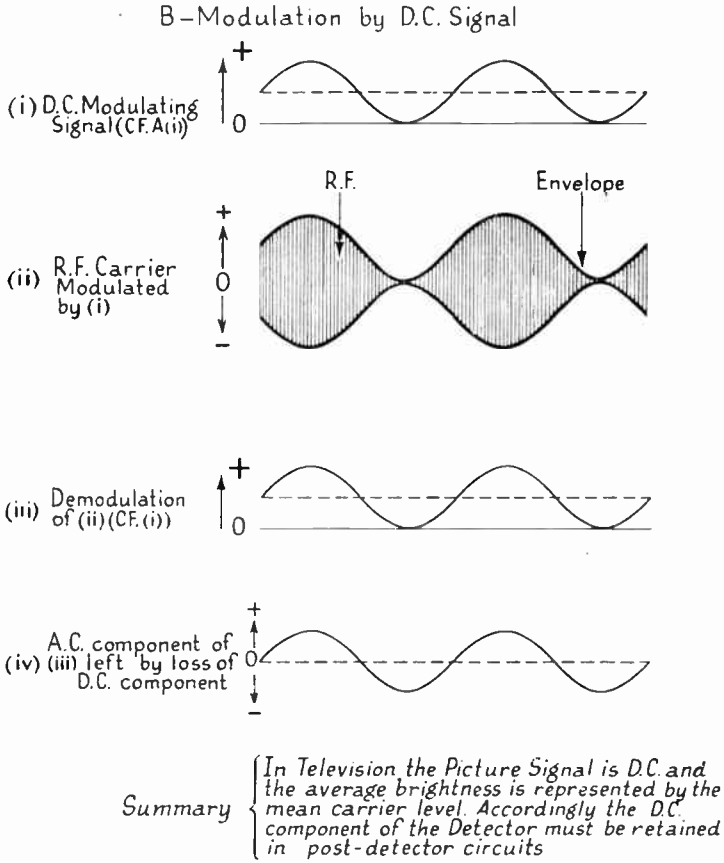

FIG. 1.9B. MODULATION AND DEMODULATION—D.C. MODULATION SIGNAL

contains a direct component proportional to the mean carrier amplitude in addition to the audio signal, but this component is not required in the acoustic output.* In television transmission, on the other hand, the mean carrier amplitude varies with picture content, so that the direct component of the

* It is usually employed for automatic gain (or volume) control.

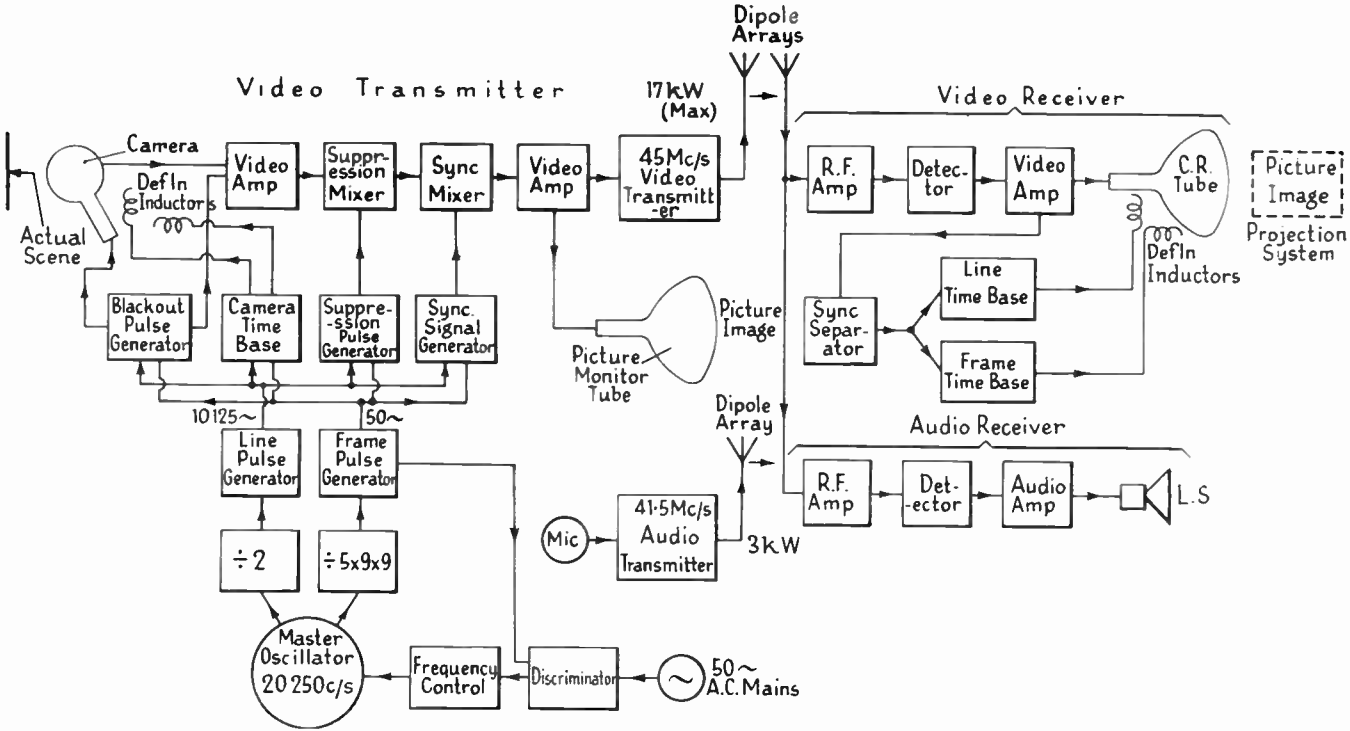

FIG. 1.10A. BLOCK SCHEMATIC OF A COMPLETE TELEVISION SYSTEM

demodulator output is an essential part of the video signal; in fact, it represents the absolute brightness level. Accordingly d.c. couplings have to be used in the subsequent circuits or some method employed to restore the d.c. component where required, e.g. at the modulator of the picture tube. The two

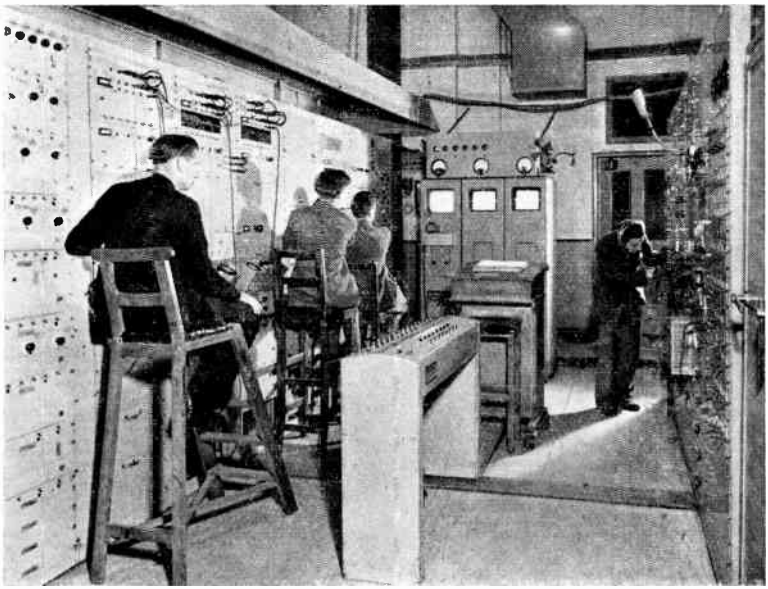

FIG. 1.10B. CONTROL ROOM "A" OF THE B.B.C. TELEVISION STATION

Engineers are using the C.R.T. Picture Monitors (centre) to set up the video modulation equipment (left). Audio modulation equipment is mounted in the racks on the right.

(*Courtesy of the B.B.C.*)

processes are compared for the case of single-tone modulation in Figs. 1.9A and B.

1.10. The Complete Television System. Having discussed the fundamental processes and components of the television system it will be helpful to follow through the complete chain of processes from camera to cathode-ray tube in terms of simplified schematics of the transmitter and receiver.

Referring to the transmitter schematic shown in simplified form in the left-hand portion of Fig. 1.10A (the B.B.C. transmitter (see Fig. 1.10B) has been selected as a suitable example),

we may distinguish first the signal chain. The video signal produced by the camera is amplified before being combined with the synchronizing pulses. The mixing of the two signals is carried out in two stages; the "suppression mixer" masks the picture signal throughout the synchronizing periods, while the "synchronizing mixer" inserts the actual synchronizing

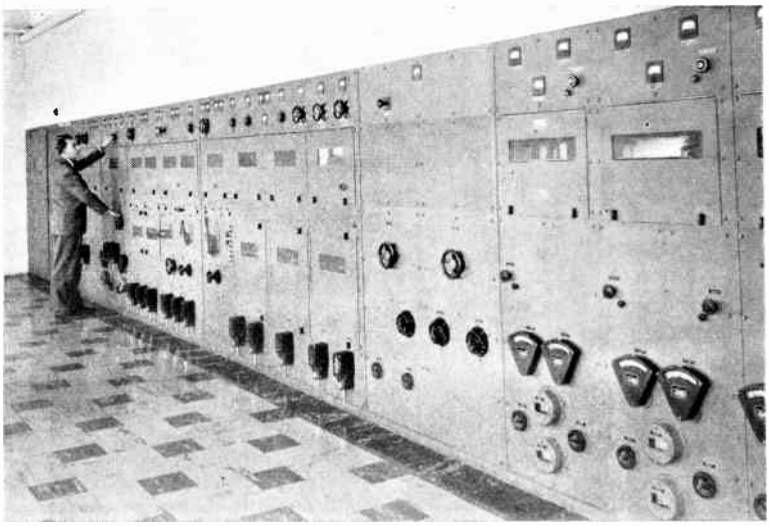

FIG. 1.10c. MAIN TRANSMITTER FOR G–E TELEVISION BROADCASTING STATION WRGB, LOCATED IN THE HELDERBERG MOUNTAINS, NEAR SCHENECTADY, N.Y.

(Courtesy of the General Electric Co. (U.S.A.))

pulses, leaving the brief pedestals already mentioned. The composite signal is then amplified sufficiently to drive the transmitter modulator which is a wide-band amplifier type circuit operating on a point in a conventional crystal oscillator, frequency multiplier, and R.F. amplifier chain. The tapping of the final video amplifier output for feeding a C.R.T. picture monitor will be noted. The line synchronizing pulses at 10,125 per sec and the framing signal, which recurs 50 times per sec are obtained by dividing down from a master oscillator operating at 20,250 per sec. The latter is locked to the mains through its 50 c/s output (at the end of the divider chain) by

comparing the latter with the mains in a phase discriminator circuit which corrects the master oscillator frequency through a control stage (cf. A.F.C. as applied to broadcast receivers). The three outputs of the master oscillator and its dividers are then suitably shaped and combined to produce the suppression and synchronization waveforms, to lock the camera time bases,

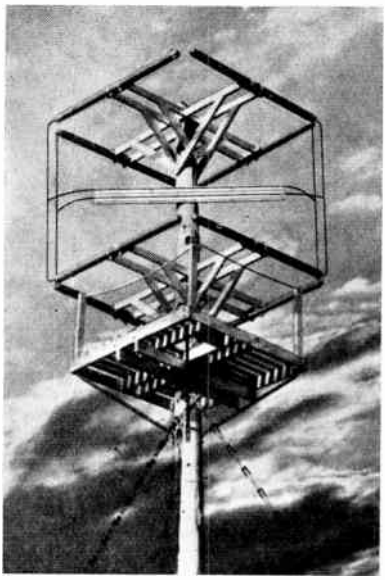

FIG. 1.10D. CUBICAL TELEVISION ANTENNA DESIGNED BY G–E ENGINEERS FOR STATION W2XB

Two of these aerials have been erected, one for sound and one for picture transmission. The station is in the Helderberg Mountains in New York State.

(*Courtesy of the General Electric Co., U.S.A.*)

and to cut off the camera beam during the flyback periods. The same general technique is employed in U.S. transmitters but is a little more complicated owing to the additional equalizing pulses.[19]

At the receiving end the signal undergoes R.F. amplification, demodulation, and V.F. amplification (assuming a tuned-radio-frequency (T.R.F.) type of receiver) before being applied to the C.R.T. grid. The entire signal is retained through this chain so that the synchronizing pulses black out the flybacks.

The signal passed to the synchronizing system must, however, be cleared of picture modulation; this is achieved in some form of amplitude filter which is arranged to clip off the signal beyond black level. The resultant signal is then passed through a circuit capable of discriminating between the line and frame synchronizing pulses on the basis of their difference of width, so that two separate sets of triggering pulses are produced, one set for each time-base circuit. These trigger pulses usually operate upon a sawtooth voltage oscillator which drives a current output stage with the deflector inductors coupled to its anode circuit. The cathode-ray tube and its associated circuits will be treated in detail in Chapter III, and subsequent Chapters (V–IX) will deal systematically with the remainder of the receiving equipment.

1.11. The Sound Channel. Existing television systems differ most in the method adopted for transmitting the sound accompaniment, for while in all cases a completely separate channel has been used and the opportunity (availability of bandwidth) taken to achieve considerably higher fidelity than in ordinary sound broadcasting, in Britain conventional amplitude modulation (A.M.) was favoured, while in America the more recent formulation of standards allowed the preference of frequency modulation (F.M.). More recently, in both Britain and the U.S.A., experiments have been carried out with pulse modulation using only the video transmitter with additional narrow pulses inserted in the line synchronizing intervals. Various methods of modulating these pulses are feasible, e.g. width, amplitude, phase, but it is unlikely that pulse modulation will be officially introduced until the complete signal specification is revised—particularly in this country where the low existing line frequency of 10,125 c/s is insufficient to allow fully satisfactory exploitation of the technique.

Circuits employed for sound reception range from a completely separate T.R.F. or superhet receiver to an arrangement in which all possible existing stages are made common; thus in the British case the video receiver R.F. amplifier and frequency changer and the A.F. portion of the normal broadcast

receiver may be adapted for the reception of television sound, while in the American case, a separate F.M. receiver, capable of tuning other F.M. stations, is often already available for this purpose.

1.12. Present Frequency Assignments. In Britain and France only one television frequency assignment has been made, viz. 45 Mc/s for vision and 41·5 Mc/s for sound in the former country, and 46 Mc/s and 42 Mc/s respectively in the latter. In the U.S.A. two wide V.H.F. bands have been assigned to television (TV) stations and split up into the channels listed in Table III. Details of the signal channel subdivisions will be given in Chapter VI. With regard to power ratings the British figures of 17 kW (100 per cent level) for vision and 3 kW for sound are typical.

TABLE III: U.S. TELEVISION CHANNEL FREQUENCY ALLOCATIONS

Channel	Frequency Band (Mc/s)	Channel	Frequency Band (Mc/s)
1	44–50	7	174–180
2	54–60	8	180–186
3	60–66	9	186–192
4	66–72	10	192–198
5	76–82	11	198–204
6	82–88	12	204–210
		13	210–216

Note: Not more than seven channels to be allotted to any one area.

1.13. Summary of Recent Developments. Once the initial post-war task of restoring operation of the pre-war stations had been completed the larger firms concerned with television development recommenced experimental work. In this country the major achievements have been the design and construction of 605 line equipment and an improved type (CPS)* camera by E.M.I., Ltd., and the demonstration by Pye, Ltd., of vision and sound transmission on a single carrier (see Chapter VII). The B.B.C. television station remains the only one in existence which provides a service comparable with that of a normal broadcast station. Work on the extension of the service to

* "Cathode Potential Stabilizer."

Birmingham, by a chain of U.H.F. relays has already commenced. In the U.S.A. demonstrations of colour transmission have been given by R.C.A. and C.B.S. (see Chapter II), but it appears to be agreed that television must first be established, as in Britain, on a monochromatic basis. At present twelve stations, including four in the New York area, are radiating more or less regularly and on experimental lines. The main preoccupation in France has been the reconsideration of the standard of transmission.

BIBLIOGRAPHY

Origin of Cathode-ray Television:

(1) CAMPBELL-SWINTON, A. A. The Possibilities of Television. *W.W.* (1924) April 9th, 16th, 23rd.

(2) ZWORYKIN, V. K. U.S. Pat. No. 1691324; Brit. Pat. No. 255057.

General Television Engineering Practice:

(3) MACNAMARA, T. C., and BIRKINSHAW, D. C. The London Television Service. *J.I.E.E.* Dec. (1938) 729.

(4) BLUMLEIN, A. D., *et al.* The Marconi–E.M.I. Television System. *J.I.E.E.* Dec. (1938) 758.

(5) FINK, D. G. *Principles of Television Engineering.* McGraw-Hill (1940).

(6) ZWORYKIN, V. K., and MORTON, G. A. *Television: The Optics of Image Transmission.* Wiley (1940).

(7) FINK, D. G. *Television Standards and Practice.* McGraw-Hill (1943).

(8) FINK, D. G. Television Broadcasting Practice in America 1927–1940. *J.I.E.E.* Pt. III, Sep. (1945) 145.

(9) DELABY, H. Television Transmission Centre, Paris. *J.T.S.* Dec. (1946) 307. (Translation by T. H. Bridgewater.)

Cameras:

(10) ZWORYKIN, V. K. The Iconoscope. *P.I.R.E.* Jan. (1934) 16.

(11) FARNSWORTH, P. T. Television by Electron Image Scanning. *J.F.I.* Oct. (1934) 411.

(12) MCGEE, J. D., and LUBSZYNSKI, H. G. E.M.I. Cathode Ray Television Transmission Tubes. *J.I.E.E.* 84 (1939) 468.

(13) IAMS, H., MORTON, G. A., and ZWORYKIN, V. K. The Image Iconoscope. *P.I.R.E.* Sep. (1939) 541.

(14) IAMS, H., and ROSE, A. The Orthicon. *R.R.* Oct. (1939) 186.

(15) ROSE, A., WEIMAR, P. K., and LAW, H. B. The Image Orthicon. *P.I.R.E.* Jul. (1946) 424.

(16) McGee, J. D. Electronic Generation of Television Signals. *Electronics*, Ch. IV. edited by B. Lovell, Pilot Press (1947).

Transmitters:

(17) Conklin, J. W., and Gihring, H. E. Television Transmitters Operating at High Powers and Ultra-high Frequencies. *R.R.* Jul. (1937) 30.

(18) Bevan, P. A. T. High Power Television Transmitters. *E.E.* May (1947) 138; June (1947) 182.

(19) Bedford, A. V., and Smith, J. P. A Precision Television Synchronizing Signal Generator. *R.R.* July (1940).

(20) D.G.F. Design Trends in Television Transmitters. *E.* Jan. (1948) 76.

(21) Hamilton, G. E. T. V. Transmitter Design. *C.* May–Aug. (ind.) (1948).

Studio Practice:

(22) Birkinshaw, D. C., and Campbell, D. R. Studio Technique in Television. *J.I.E.E.* Pt. III, Sept. (1945) 165.

(23) Hubbell, R. *Television Programming and Production.* Murray Hill (1945).

(*For full titles of journals quoted see Appendix II.*)

CHAPTER II

BASIC SIGNAL AND CIRCUIT THEORY

It will be understood from the previous chapter that television reception involves the handling of a more complex signal and embraces a wider range of electronic circuit practice than reception of sound alone; it will be necessary therefore to review and extend the basic theory applicable to broadcast receivers. In the following sections this subject is treated in a general manner so that actual television circuits may be studied later in detail, without continual reversion to fundamentals. The action of the circuits of a sound receiver is usually considered in terms of a sinusoidal signal which represents a single audio-frequency tone, originating at the microphone, or a carrier wave generated by the radio-frequency circuits of the transmitter. The modulation of the latter by the sinusoidal wave is equivalent to the addition of two sinusoidal "sideband" components to the carrier (see Appendix I). It is recognized and always borne in mind that the audio signal occurring in an actual programme is extremely complex, but the use of the sine wave as the basic signal is appropriate and satisfactory. In television, however, the vertical edges occurring in the V.F. signal, or in the envelope of the R.F. wave, make the sine wave less suitable as a basic signal for the consideration of circuit action, particularly in the synchronizing system, and call for a study of wave-shapes of this kind.

2.1. Graphical Representation of Voltage and Current Variations. The potential difference (p.d.) existing between any two points in a circuit, or the current flowing at any point in it, very rarely remains constant in strength over an appreciable period and is usually continuously changing. In many cases in electronic systems this variation is a periodic one, i.e. it is repetitive. It is convenient to represent the mode of variation by an ordinary graph, plotting time horizontally ("x" direction)

and amplitude vertically ("y" direction). In general, both electromotive force (e) and current (i) can act or flow in either of the two possible directions in a circuit loop; these directions are denoted positive and negative to correspond with the polarity of the applied e.m.f., the rule being that outside a source of e.m.f. a current flows from positive to negative. It is unfortunate that this convention was adopted before the discovery that electron flow occurs in the opposite direction.

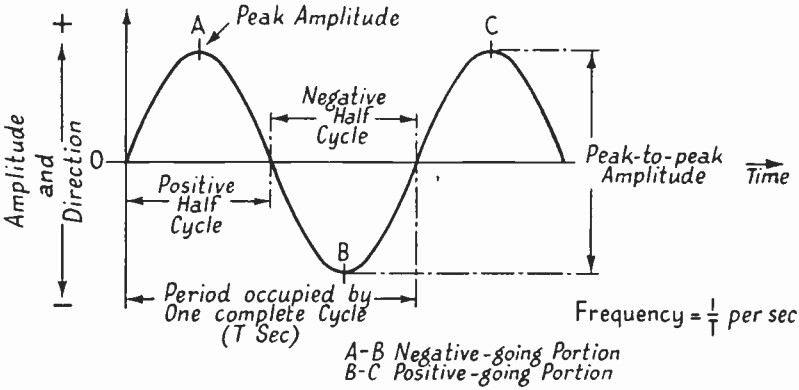

FIG. 2.1A. THE SINE WAVE AS AN ILLUSTRATION OF THE CONVENTIONAL GRAPHICAL METHOD OF REPRESENTING VOLTAGE AND CURRENT

By convention again the positive direction is represented by plotting upwards from the zero axis and the negative downwards. The curve obtained is commonly spoken of as the "waveform" of the voltage or current, although strictly speaking, this term should only be used for a recurrent variation. In the latter case it is, of course, necessary to plot only one "cycle" of the variation. The familiar sine wave is repeated in Fig. 2.1A as an example of this simple graphical method of representation, and examples of the more common complex waves of the kind in mind are shown in Fig. 2.1B; others will be given later.

The so-called "square" wave shown at (i) in Fig. 2.1B is best regarded as a voltage (or current) which flows at *constant* strength but is periodically reversed, the time taken for each reversal being vanishingly small. Such a wave could not exist

in this ideal form, of course, since sufficient stray reactance would always be present to lengthen the reversal time, but very good approximations can be achieved in practice. One method consists in raising a sine wave of suitable frequency

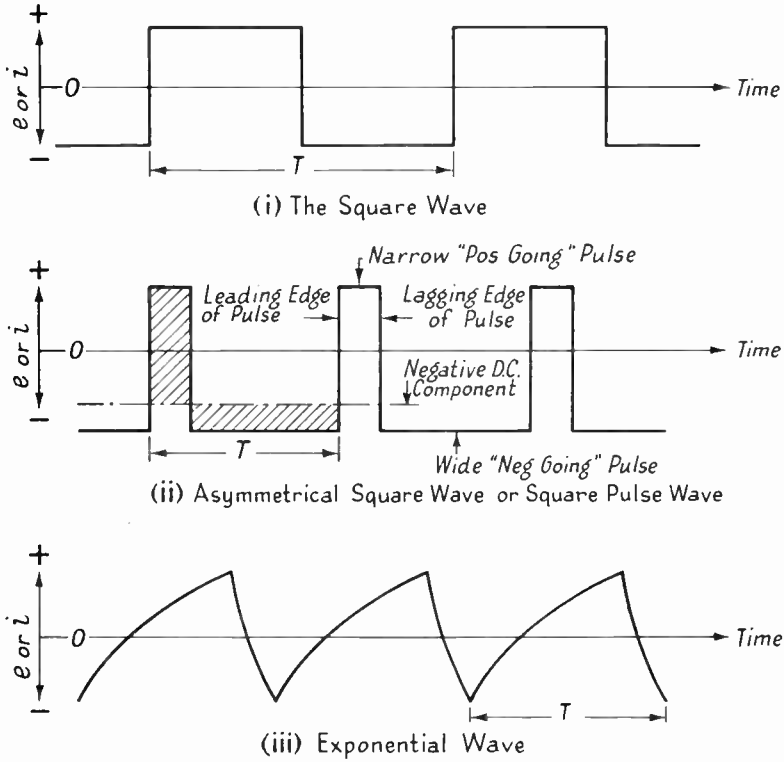

FIG. 2.1B. EXAMPLES OF COMPLEX WAVEFORMS ENCOUNTERED IN TELEVISION CIRCUITS

All are capable of analysis into sinusoidal components. T is the Wave Period and $1/T$ the Wave Frequency.

to a very large amplitude and passing it through a limiting circuit; the latter takes a narrow "slice" out of the centre of the wave. Certain oscillator circuits can be arranged to produce an approximate square wave directly, the multivibrator being an example (Chapter IV). Very often a square wave is needed in which the alternate half-cycles differ in duration or "width." Such a wave is shown at (ii); here the "positive-going"

half-cycles are so narrow by comparison with the "negative-going" half-cycles as to justify the alternative description of "square pulse" wave. The third example will be recognized for its similarity to Fig. 1.6B and is defined in Ch. IV.

It is possible to draw through any waveform a horizontal line at such a level that the area enclosed between this line and the portions of the wave above it is equal, over a whole number of complete cycles, to the area enclosed between it and the lower portions of the curve. When this level corresponds with zero amplitude the wave is purely alternating. In practice this is often not the case and the difference between the two levels, which may be positive or negative, represents a direct component in the waveform. In Fig. 2.1B the square wave (i) is purely alternating, whereas the pulse wave (ii) has a negative d.c. component—shown as a chain line; the shaded areas above and below it are equal. In valve circuits the waveform occurring at a signal electrode usually has a d.c. component (e.g. grid bias, or normal anode voltage) under the actual signal, and it will be remembered (§ 1.9) that in television the signal itself always contains a d.c. component.

2.2. Analysis of Complex Waveforms. While these new waveforms appear to differ radically from the familiar sine wave, it can be shown mathematically that any wave encountered in practice can be split up into a set of component sine waves (Fourier Analysis).* In general the fundamental is accompanied by odd and even harmonics which extend to infinite frequency, with a more or less rapid decrease in amplitude; in special cases the odd or even harmonics are absent. A good example is the symmetrical square wave shown in Fig. 2.2A; it contains only odd harmonics of the fundamental and their amplitudes decrease harmonically, i.e. the nth harmonic has $1/n$th the amplitude of the fundamental. That this method of analysis has real significance and is not a fiction is confirmed by the fact that waves having steep edges can only be transmitted with little change of waveshape through circuits having a frequency response extending to many times

* See Appendix I (§ A 1.1).

the fundamental. Where such waves are used to modulate an R.F. carrier it is, of course, equally necessary to have wide bandwidth. With television signals, the bandwidth needed for good picture definition usually somewhat exceeds that required for good transmission of the synchronizing pulse wave.[1, 2, 3, 4, 5]

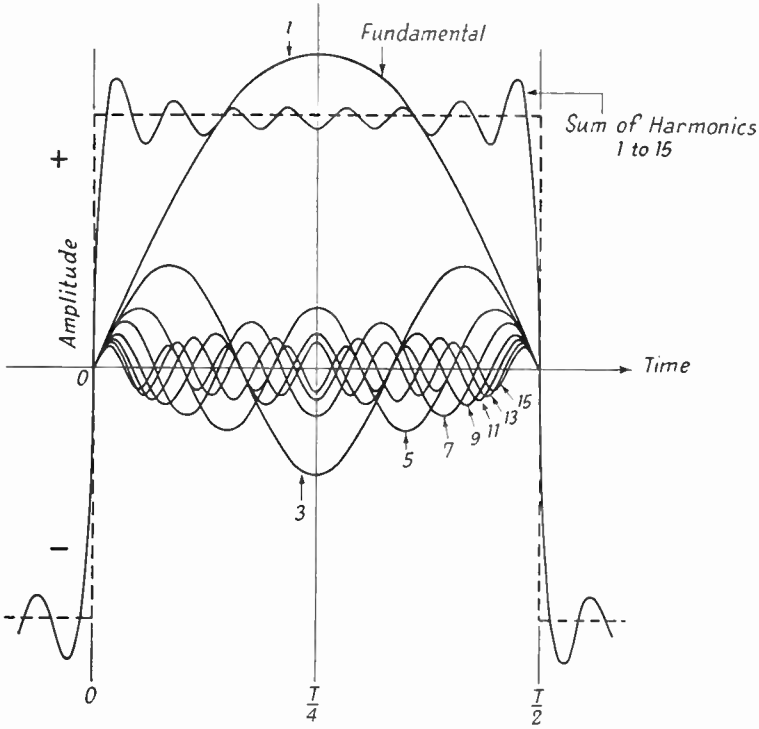

FIG. 2.2A. ANALYSIS OF THE SQUARE WAVE INTO ITS HARMONIC COMPONENTS
(Adapted from Reference 9.)

The "harmonic" method of analysis just described is less directly useful than the alternative "transient" method, first used extensively by Heaviside, which uses the "step" form of voltage (or current) shown at (i) in Fig. 2.2B. This voltage is non-existent until a definite instant (which provides a convenient zero ($t = 0$) point on the time axis) when it jumps instantaneously to a definite amplitude (of E volts, say), and remains at this level thereafter. Two such steps (impulses)

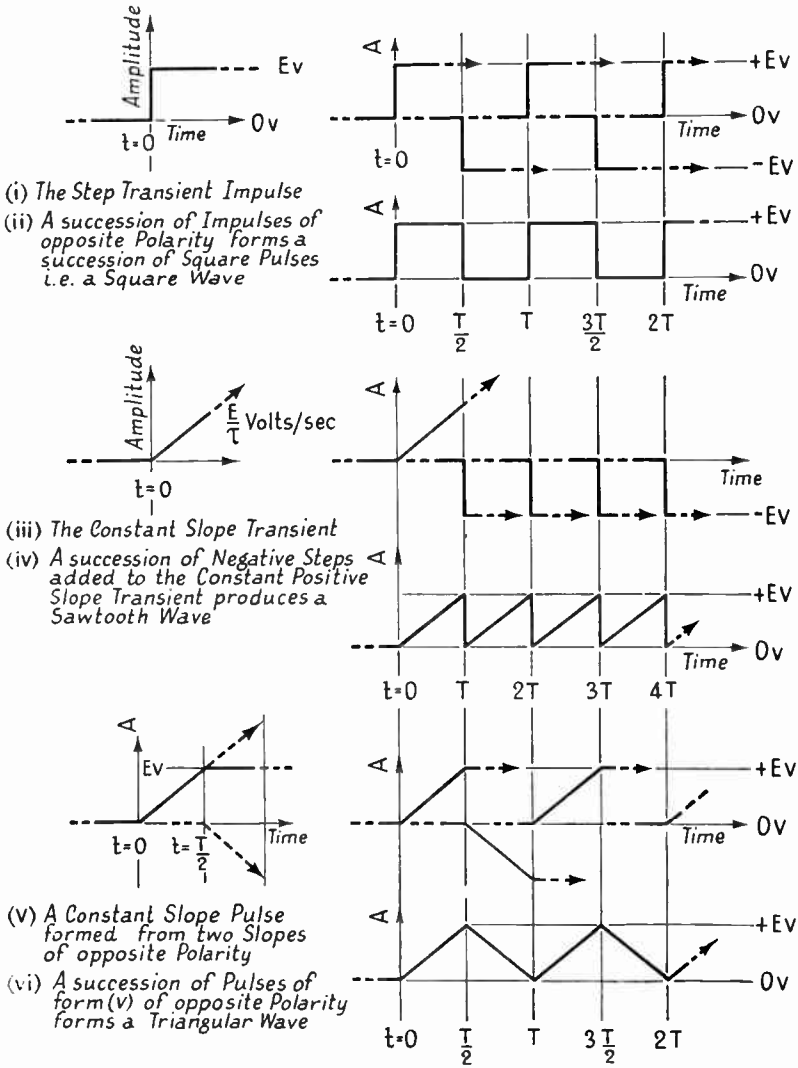

FIG. 2.2B. BASIC TRANSIENTS AND THEIR USE IN WAVEFORM ANALYSIS

having opposite polarity and separated by T seconds form a square pulse of E volts amplitude and T seconds duration ("width"), while a continuous succession of steps having alternate opposite polarity build up a square wave (ii). Another useful basic transient is shown at (iii); in this case the e.m.f. instead of jumping to level E commences at a definite instant to rise with a constant rate and continues to do so without limit. If such a voltage were followed by a series of equally spaced steps of opposite polarity a sawtooth wave would be produced (iv). A more satisfactory transient for the analysis and synthesis of waves having linear sloping sections is given at (v); the unit step and the constant slope forms are special cases of this function, obtained by making its sloping portion infinitely steep (i.e. vertical) or of infinite duration so that the horizontal level is never reached. A regular sequence of these constant slope functions having alternately opposite polarity may be arranged to form waves of triangular (vi) (including the sawtooth case) or trapezoidal shape, both of which occur in television circuits.[11]

2.3. Transient Response of Simple Networks.* When a sine wave is applied to a network, however complex, made up of ideal (i.e. linear) inductors, capacitors, and resistors, the output wave will be unchanged in shape but altered in phase and amplitude. If a non-sinusoidal wave is applied to such a network, although the sine components are transmitted without change of shape, they add up to give a different output wave-shape unless the network has the same amplitude response for each component and provides a shift of phase proportional to frequency. In television this change of wave-shape is exploited in the receiver circuits for separating the frame synchronizing pulses from the composite signal, and for "peaking up" the pulses before they are used to lock the time bases.

It is obviously very tedious to work out the output wave-shape by the method just indicated; a more direct approach, at least for the simpler cases, makes use of the basic transient voltage forms discussed in the last section.

*See Appendix I (§ A 1.2).

The standard method of analysing practical circuits by setting up equivalent networks consisting of idealized capacitance, inductance and resistance elements (C, L, R) and voltage and current generators to allow application of classical "a.c. theory," is equally suitable to the transient method of analysis. It is not necessary to dwell upon purely resistive circuits, since the direct proportionality of instantaneous voltage and current

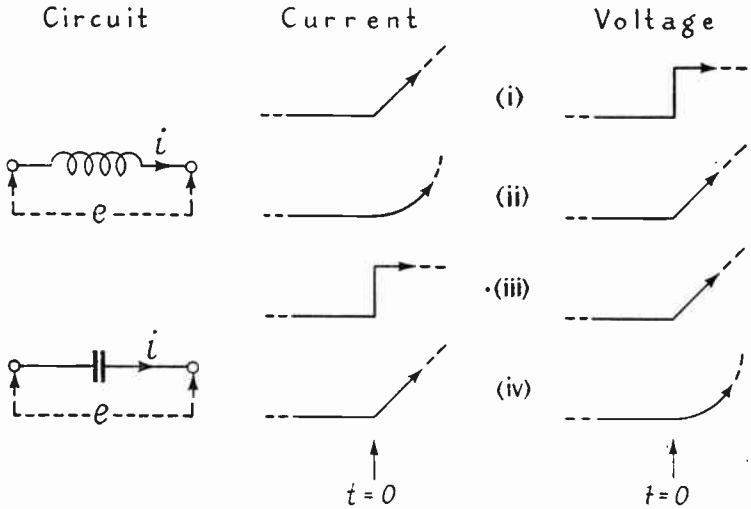

FIG. 2.3A. TRANSIENT OPERATION OF SIMPLE CIRCUITS

in them does not give rise to change of wave-shape. The shaping properties of networks containing reactance depend on the essential characteristics of the reactive elements. The voltage developed across a pure inductor is proportional to the rate of change of the current flowing through it. Thus, when the current rises at a *constant* rate in an inductor (a requirement in C.R.T. deflector inductors) the p.d. across it must remain constant (see Fig. 2.3A). If the p.d. across the inductor rises linearly, however, the current must rise at an ever-increasing rate; the actual form of the current curve is parabolic. One method of deriving the last result from the simpler preceding case is to imagine the rising voltage as consisting of a "staircase" of infinitely small steps; the final result (i.e. the *actual* current

flow) is then obtained by superposition of the successive current increments. If a constant current is switched into a capacitor the p.d. across the latter will rise at a constant rate, while current building up in a linear manner will cause the capacitor p.d. to increase parabolically. These two cases of transient conditions in the inductor and capacitor should be carefully compared with reference to Fig. 2.3A.

When two or more elements are contained in a circuit subject to transient excitation the response is not usually easy to determine other than by rigorous mathematical analysis; the following treatment of some simple but important cases is therefore limited to a description of the essential features of the circuit action (some mathematical notes are provided in Appendix I). Where circuit elements are all in series or all in parallel with each other the fact that the component p.d.'s or currents, respectively, add up to the input voltage or current is a great help in deducing the response. Two cases of great practical importance are those of capacitance and resistance in series, and inductance and resistance in series, each with step voltage excitation. In these and following examples the capacitors will be assumed to have no existing charge and the coils no current at the instant of completing the circuit.

A step voltage e applied to a capacitor C, and to a resistor R, in series, causes an initial current $i_0 = \frac{e}{R}$, because the capacitor has no initial p.d. and the whole of the back e.m.f. opposing e must develop initially across R. Immediately current flows, however, the p.d. across C rises and reduces the voltage available for forcing charging current through R. Consequently the rate of charge falls progressively, but more and more slowly, as the p.d. of C approaches the applied voltage while the charging current and resistor voltage all approach zero, but at an ever-decreasing rate. The plots of i, e_c, and e_R (see Fig. 2.3B) are spoken of as "exponential" curves (see Appendix I). The three curves have the same general shape whatever values e, C, or R may have, but, for a given e, the

curves stretch out along the time axis more and more as either C or R is increased, since increase of either quantity lengthens the time taken by C to charge to any given fraction of the applied voltage. It is convenient to take the fraction

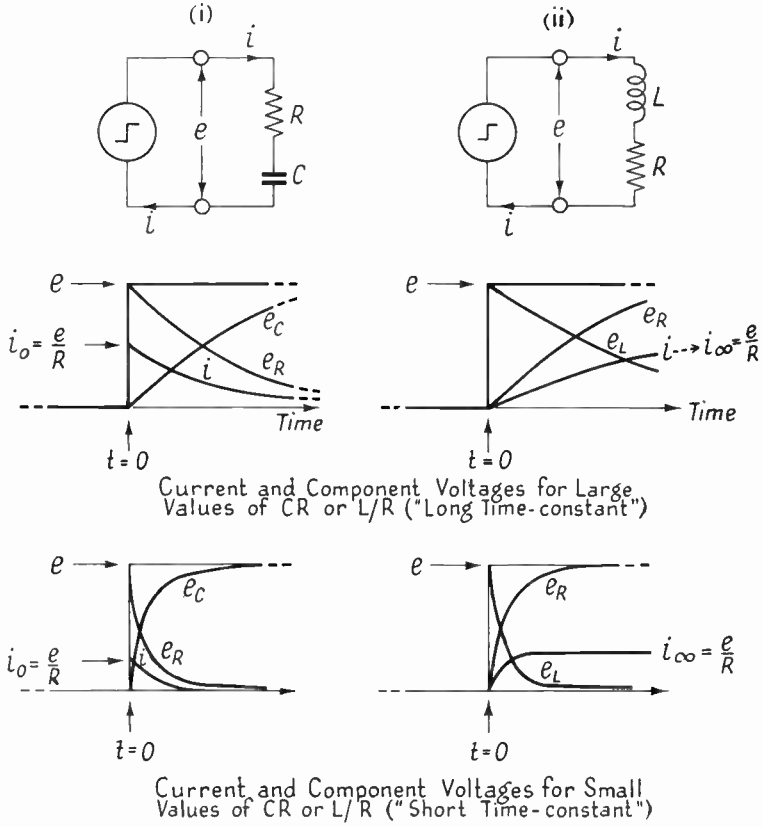

FIG. 2.3B. TRANSIENT RESPONSE (WITH STEP E.M.F. EXCITATION) OF TWO-ELEMENT SERIES CIRCUITS

Both circuits are made at $t = 0$.

0·632e, for the corresponding time interval (seconds) is then given by the product $C \times R$ (farads $\times$ ohms, or μF $\times$ MΩ). The figure so derived is called the "time constant" of the circuit and denoted τ. When a charged capacitor is discharged through a resistor the discharge current falls in the same manner as the charging current and the capacitor p.d. reaches 1·000

$-0{\cdot}632 = 0{\cdot}368$ of its initial (fully charged) value after CR seconds.

The effect of connecting resistance in series with inductance (L) prevents the current from rising indefinitely at a constant rate and causes an exponential rise toward the limit set by Ohm's Law, i.e. $i_{\max} = \frac{e}{R}$, by which time the falling rate of current increase has brought the inductive back e.m.f.

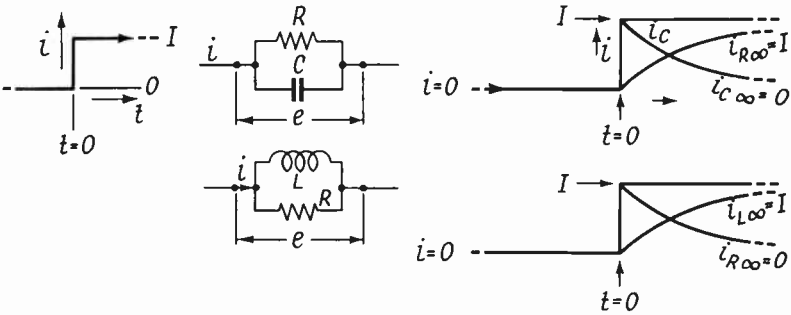

FIG. 2.3C. TRANSIENT RESPONSE OF SIMPLE PARALLEL CIRCUITS WITH STEP-CURRENT EXCITATION

practically to zero. In this case the quantity controlling the rate of response, i.e. the time constant, is $\frac{L}{R}$; increase of L, or decrease of R, delays the instant at which the current reaches $0{\cdot}632$ of its final value. (See right-hand portion of Fig. 2.3B.)

Comparing the two cases it will be noted that there is correspondence between

(i) Capacitor charge	of (*a*) and	Inductor current	of (*b*).
(ii) Resistor voltage		Inductor voltage	
(iii) Capacitor voltage		Resistor voltage	

This correspondence is fundamental and all RC networks have a corresponding RL network.

In considering elements in parallel it will be convenient, for ease of comparison with the series circuits, to take the response to current excitation. With C and R in parallel the injection of a "step" current produces an exponential rise of p.d. across

them; the component currents are shown in Fig. 2.3c. Similar excitation of the parallel LR circuit sets up an exponential current rise in L and develops a "peaky" voltage change across it. In both cases e is proportional to i_R.

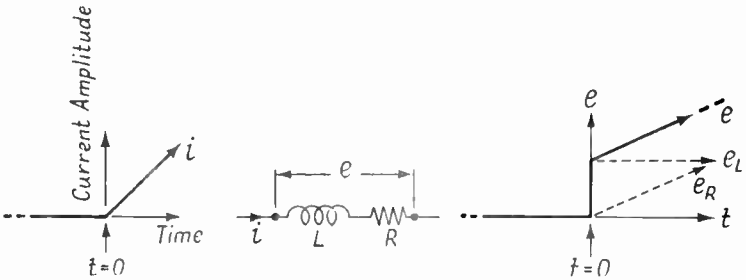

FIG. 2.3D. VOLTAGE DEVELOPED ACROSS A SERIES LR CIRCUIT BY A LINEARLY-RISING APPLIED CURRENT

An important practical case is that of a linear current rise in a series LR circuit. The p.d. developed across L is of step form and that across R follows the current; the resultant is a vertical jump followed by a linear rise. This type of response is sometimes called trapezoidal (Fig. 2.3D). A similar p.d.

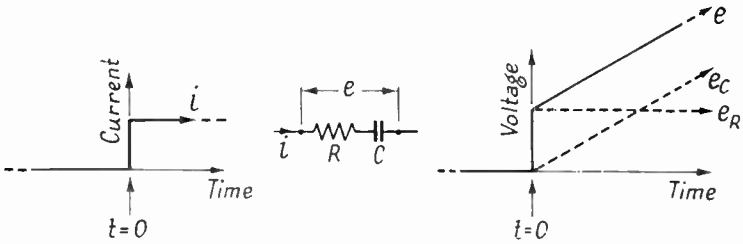

FIG. 2.3E. VOLTAGE DEVELOPED ACROSS A SERIES RC CIRCUIT BY A CURRENT OF STEP FORM

appears across a series CR circuit having step current input (see Fig. 2.3E).

The next case selected is that of a parallel LR circuit fed with a linearly rising current. After the initial transient period equilibrium is reached with the current in R and p.d. across R constant and the current in L rising linearly at such a rate that the inductive back e.m.f. balances the resistor p.d. During the transient period the current in R rises exponentially with

downward curvature and that in L builds exponentially with upward curvature (see Fig. 2.3F).

When capacitance, inductance and resistance are all present in the series circuit the latter becomes resonant to a particular frequency and the application of a step voltage excites a damped oscillation at this frequency unless the damping effect of the resistance is sufficiently great. The two types of response

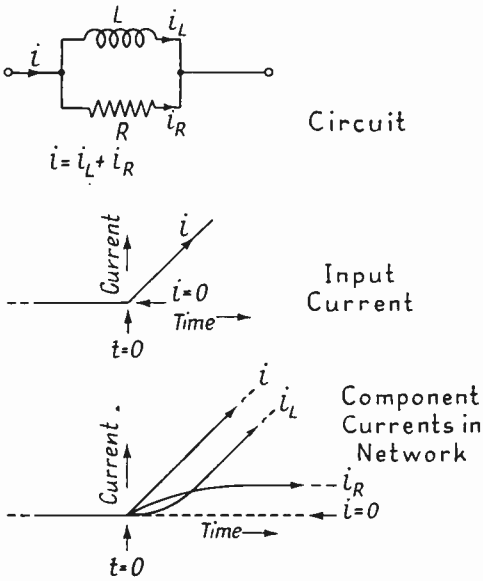

FIG. 2.3F. APPLICATION OF A LINEARLY-RISING CURRENT TO A PARALLEL LR CIRCUIT

obtainable, viz. a damped oscillation or a unidirectional pulse, for the two conditions $R^2 <$ or $> 4\dfrac{L}{C}$ respectively, are shown in terms of the circuit current in Fig. 2.3G. Initially the current will increase at such a rate that the back e.m.f. developed across L balances the applied e.m.f. As the current builds up, however, the potential difference developed across C will increase and reduce that available for driving current through L and R. Accordingly the initial rate of current increase cannot be maintained and the current variation will pass

through a maximum and then (owing to the blocking effect of C) tail off gradually to zero. If the initial current surge is allowed by smallness of R relative to $\frac{L}{C}$ to rise sufficiently the

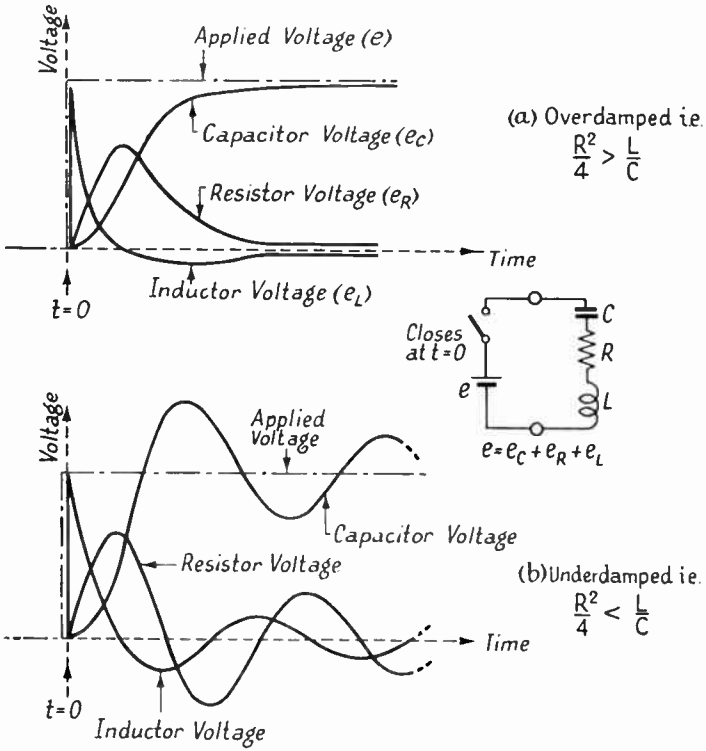

FIG. 2.3G. THE RESPONSE OF THE SERIES-TUNED CIRCUIT TO A STEP E.M.F.

The component p.d. appearing across each element is shown for both damped and underdamped cases. In both cases current has the same form as resistor voltage.

considerable magnetic field built up will, in collapsing, cause the current to swing through zero amplitude and reverse in direction and the current decay will be oscillatory rather than unidirectional. The component p.d.s are shown in the figure.[6, 7, 8, 9, 10]

2.4. Simple Wave-shaping Networks. The method of deriving the response of the circuits of the preceding section to a square

pulse by imagining the pulse to be made up of two distinct steps of opposite polarity and separation T seconds and adding the separate responses, has been carried out for the series CR circuit in Fig. 2.4A for two cases: (i) time constant much smaller than the pulse duration (T) and (ii) time constant much larger than T.

This method will now be used to obtain the response to a repetitive pulse, i.e. a pulse wave. It was shown in Fig. 2.2B

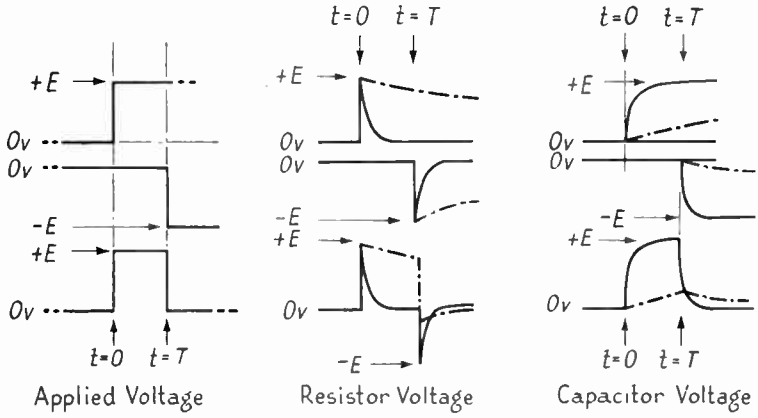

FIG. 2.4A. THE RESPONSE OF A SERIES CR TO A SQUARE VOLTAGE PULSE, OBTAINED BY THE METHOD OF SUPERPOSITION, FOR BOTH LONG (CHAIN LINE) AND SHORT (FULL LINE) TIME CONSTANTS

that repeated steps of alternate polarity occurring at regular intervals add up to produce a square wave. The case of the square voltage wave applied to a series CR circuit can be dealt with directly, however, as shown at Fig. 2.4B. The case of a short time-constant value for the product CR is easily worked out for the arrangement shown because the small values of R and C allow the circuit to return to equilibrium (i.e. C uncharged) by the end of each cycle. It will be noted that the applied square wave is entirely positive going, and, since the switch is opened and closed for equal periods, the d.c. component of the input is $0{\cdot}5\ E_v$. The voltage wave appearing across the capacitor is similar to the applied voltage except for the rounding of alternate corners, while the resistor

voltage wave is a series of alternate spikes. As either C or R is reduced the capacitor wave approximates more closely to the applied voltage wave; the resistor voltage "spikes," while remaining of constant amplitude, decrease in width. The d.c. component of the input appears entirely across C making the capacitor p.d. entirely positive and the resistor p.d. purely

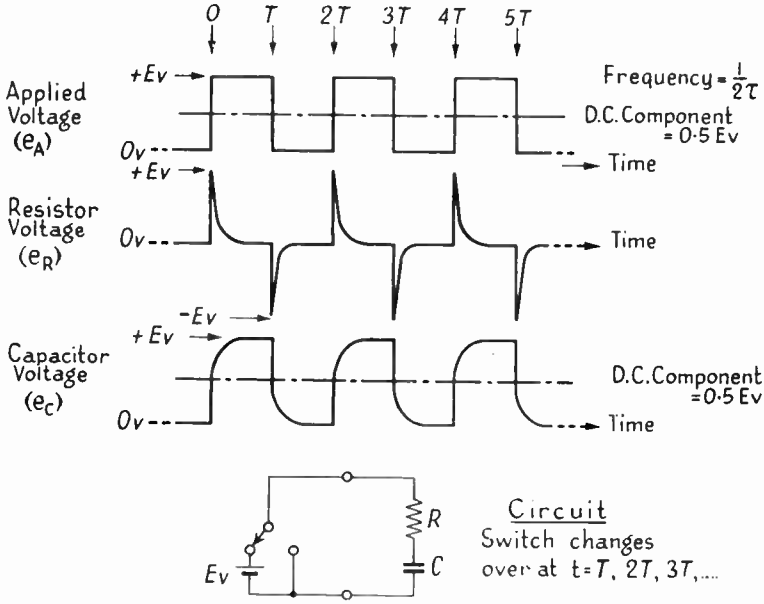

FIG. 2.4B. THE RESPONSE OF A SERIES CR OF SHORT TIME CONSTANT ($T \gg CR$) TO A SQUARE WAVE

alternating; the importance of this point will be brought out in the next section.

When the time constant of the series CR becomes comparable with the period of the applied wave a complication arises in the circuit action. At the end of the first open-switch period the capacitor voltage rises to much less than the full value of the applied voltage, and during the subsequent half-cycle the capacitor does not discharge completely. As a result there is an appreciable residual charge on the capacitor at the end of the first cycle (Fig. 2.4C). During the following cycles this residual charge rises progressively until it equals almost half

the amplitude of the applied pulses. The resultant capacitor voltage is an exponential wave of small amplitude superimposed on an exponentially rising voltage which represents the mean and eventually equals the d.c. component of the applied voltage. The resistor voltage wave follows by subtraction of

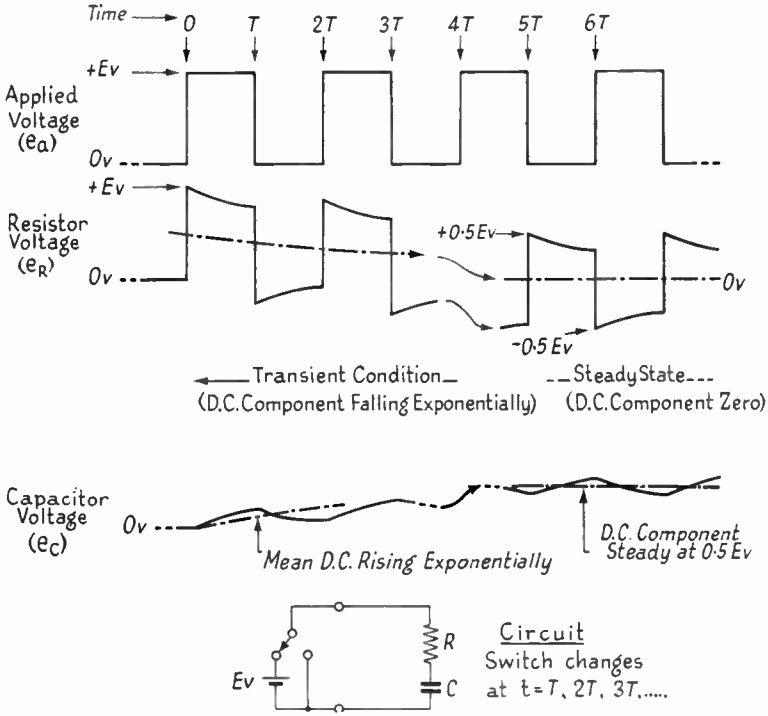

FIG. 2.4C. THE RESPONSE OF A SERIES CR OF LONG TIME CONSTANT ($T \ll CR$) TO A SQUARE WAVE

e_c from e_a. In the case of the long time-constant circuit, therefore, final equilibrium is reached only after several cycles have passed. The waveforms change continuously from Fig. 2.4B to Fig. 2.4C as C and/or R is increased. Referring again to Fig. 2.4C it will be noted that the resistor voltage approximates to the a.c. component of the input (i.e. square wave less positive polarizing voltage) while the capacitor voltage is constant except for a nearly triangular a.c. component.

The basic properties of the simple networks just discussed

lead to two extremely important basic arrangements which are used very widely in all branches of electronics, viz. the differentiator and the integrator.

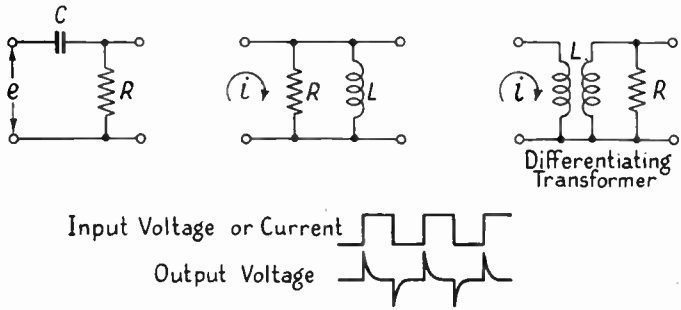

FIG. 2.4D. THREE COMMON FORMS OF DIFFERENTIATOR

In all cases the circuit time constant (i.e. CR or L/R) is very small compared with the period of the applied wave.

The voltage differentiator may consist of R and C connected in series across the input voltage. Compared with the period of the input the time constant ($R \times C$) is very small. The output voltage is that appearing across R. The response of this circuit is proportional to the *rate* at which the input changes, as illustrated for the case of the square wave. It will be noted that each edge of the square wave produces a sharp output pulse of similar polarity but the output is zero for nearly the whole of the horizontal portions of the input wave. The differentiator is sometimes called a "peaking" or "sharpening" circuit, and is used chiefly for triggering purposes. (See Fig. 2.4D.)

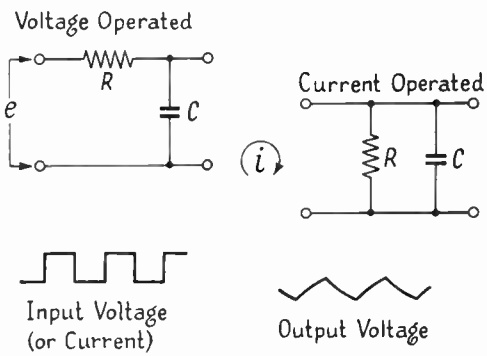

FIG. 2.4E. THE INTEGRATING CIRCUIT

The time constant (CR) is much greater than the period of the applied wave.

The integrator (see Fig. 2.4E) differs in form from the differentiator only in that the output is picked off the capacitor.

The time constant is made very large compared with that of the wave period. These two changes result in quite different properties. The integrator is quite insensitive to quickly changing voltages and provides appreciable output only when the input changes so slowly as to give the circuit time to respond. Its response to the square wave should be compared very carefully with that of the differentiator. The integrator is used frequently in television for producing a suitable frame synchronizing waveform from the signal (see Chapter V).[7, 10]

2.5. D.C. Restoration. It has already been pointed out that the television signal voltage has a direct component representing the absolute picture brightness and this component must be present at certain points in the receiver circuit. On the other hand, each time the signal passes from a circuit point to another at a considerably different mean potential, a blocking capacitor must be inserted and this must usually be followed by a resistor to complete a d.c. circuit. It will be clear now that such a *CR* coupling (*a*) should have a long time-constant to preserve the waveshape, and (*b*) will inevitably "lose" the d.c. component of the input signal. The action of a *CR* coupling is shown in Fig. 2.5A. The seriousness of the d.c. component loss is best appreciated by comparing (as in the figure) the output of the coupling *CR* for white and black lines; due to the absence of the D.C. the wave appears at such a level as to equalize areas above and below zero voltage. When the proportion of white in the picture increases, the synchronizing pulses are depressed and the signal corresponding to darker portions of the picture passes through the synchronizing separator circuit to upset time-base synchronism ("tearing" of the picture). Moreover, the C.R.T. grid fails to drive the tube to full white. Even worse, a given C.R.T. grid potential does not correspond to a constant picture brightness.

This d.c. component problem arises only after the carrier wave has been demodulated and it is quite possible to design the remaining video circuits without introducing *CR* couplings. The consequent restriction on design may become intolerable, however, and it is fortunately possible to restore the d.c.

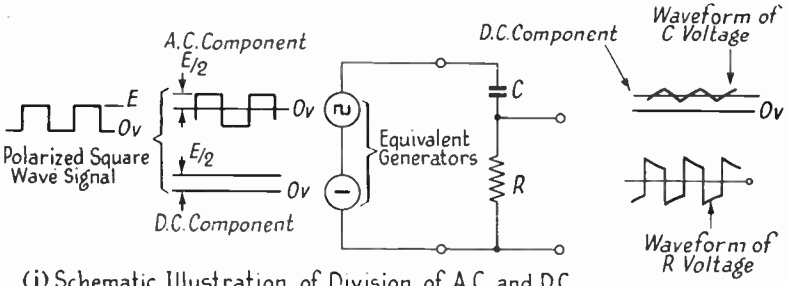

(i) Schematic Illustration of Division of A.C. and D.C. Components of Input between C and R

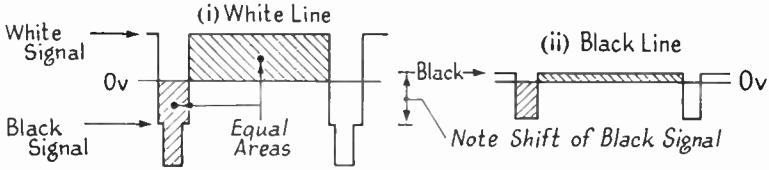

(ii) The Output of the C R Coupling for White and Black lines of the Television Signal

FIG. 2.5A. THE ACTION OF A *CR* COUPLING

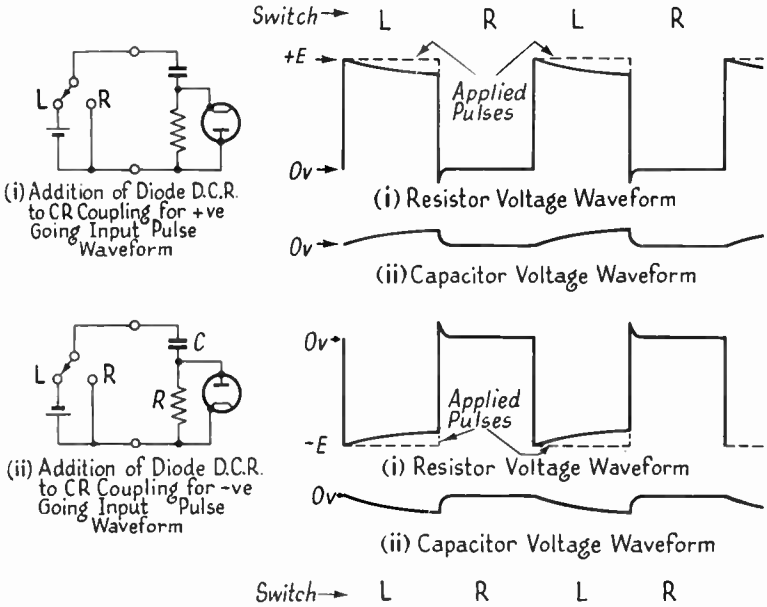

FIG. 2.5B. THE ACTION OF THE D.C. RESTORER

component by a simple device—the connection of a diode valve, in correct polarity, across the coupling resistor. The diode d.c. restorer is often regarded as a mysterious and complicated circuit, probably because its purpose has not always been clearly understood; its action is quite simple as will be shown (Fig. 2.5B).

If a diode is connected across the resistor of a CR coupling fed with a repetitive square pulse the waveforms obtained are as shown; they should be compared with those of Fig. 2.4C. When the switch is open and C is charging through R, the p.d. developed across the latter makes the diode cathode positive relative to its anode; accordingly the diode does not conduct and it has no effect on the circuit action. When the switch closes, however, bringing C and R and the diode all in parallel, the condenser p.d. is in the correct direction to make the diode conduct and, since its resistance is so small (a few hundred ohms) it converts the effective CR to a very low value and rapidly discharges C. As a result the latter is prevented from developing an appreciable mean direct voltage; moreover the short-circuiting of R on the alternate half-cycles prevents it from developing an appreciable negative output. The overall effect is that the resistor voltage now contains the d.c. component of the input signal. When the input voltage has a negative d.c. component the diode must be reversed, as shown in the lower part of the figure. It will be noted also that the voltage developed across R contains the d.c. component and in the same direction (i.e. with same polarity) as in the input wave—the d.c. component of the input is therefore restored despite the presence of the coupling capacitor.

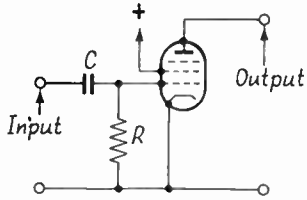

FIG. 2.5C. THE INSERTION OF A NEGATIVE D.C. COMPONENT INTO A WAVEFORM

The grid-cathode portion of an amplifier valve inserts a negative d.c. component into the input waveform if the coupling CR is large.

When it is desired to insert a negative d.c. component into a wave it is not always essential to employ a diode solely for the purpose; very often it is possible to use the grid-cathode

portion of the following valve, the chief requirement being that this valve must normally function at or near the grid current region so that grid current may be drawn for the purpose of d.c. restoration without considerably modifying the operating potentials of the valve (see Fig. 2.5c).

2.6. General Features of Special Valve Circuits in Television Receivers. In normal broadcast receivers valves of the amplifying type, that is all except diodes used for signal demodulation or power rectification, are invariably operated in the basic arrangement shown at (i) in Fig. 2.7A. The signal appearing across the output load of a preceding stage is connected more or less directly between control grid and cathode of the valve and the resultant anode current fluctuations develop a signal across the load impedance presented by the anode circuit. The fact that the control grid, being much closer to the cathode, exerts a greater effect on the anode current than the anode itself enables an enlarged signal to be obtained, but with reversal of polarity (assuming a resistive load). While the local oscillator in the frequency-changing circuit provides its own input over a positive-feedback loop, and in the A.F. stages negative feedback is often employed to reduce signal distortion, their basic arrangement is the same. With regard to the choice of valve type it will be remembered that in the carrier-frequency circuits feedback between output and input circuits through the grid-anode capacitance of the valve could not be eliminated satisfactorily by neutralization over an external feedback path and resulted in the introduction of the screening grid. The insertion of this extra grid not only reduced the grid-anode capacitance of the valve but considerably raised its anode impedance, amplification factor and power sensitivity, and the screened type of valve in tetrode or pentode form came into general use in the A.F. stages also.

In spite of the versatility of the grid-input anode-output type of valve circuit, particularly with the screened type of valve, early circuit workers in the television field found it necessary to develop new forms of valve circuit and in these new arrangements the triode performs more favourably by

comparison with the pentode. The reasons for these developments are, firstly, the wide frequency band occupied by the signal, and, secondly, the importance (in the synchronizing circuits) of signal polarity. The wide band means that signal loads used for coupling purposes have very low impedances by comparison with those occurring in broadcast receivers. Thus tuned R.F. and I.F. couplings are heavily damped by

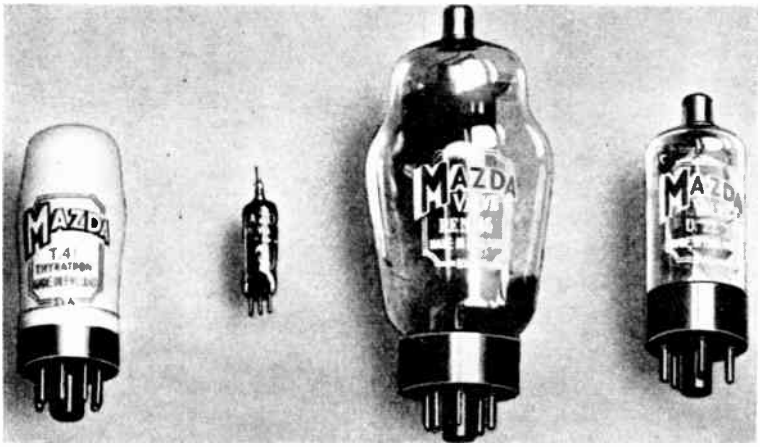

FIG. 2.6A. A GROUP OF VALVES DESIGNED FOR TELEVISION RECEPTION
From left to right they are: a T41—thyratron; a D41—detector diode; a Pen 46—line time-base amplifier; a U22—high-voltage rectifier.
(*Courtesy of Edison Swan Electric Co., Ltd.*)

the low input resistance of the valves and/or parallel resistors of the order 5–10 kΩ, and the modulation amplifier loads are built around resistors of value not more than 3 or 4 kΩ. These low-impedance loads seriously limit the gain available even with valves of the screened type. Other circuital problems arising in television are the need to—

(i) Transfer a wide-band signal from a valve stage to a very-low-impedance load (e.g. coaxial line),

(ii) Obtain increased signal amplitude without polarity reversal, and

(iii) Achieve satisfactory signal-to-noise ratio.

A group of valves designed for television reception is shown in Fig. 2.6A.

2.7. Basic Valve Circuit Arrangements. An amplifier valve has three principal electrodes, viz. cathode, control grid, and anode, and is associated with two signal loads—input and output. Accordingly there are three possible methods of arranging the basic amplifier, subject to the two essential conditions of applying the input signal between grid and cathode in order to vary the anode current and of connecting the output load in the anode signal-current loop. These arrangements are shown in Fig. 2.7A and may be distinguished by the earthy

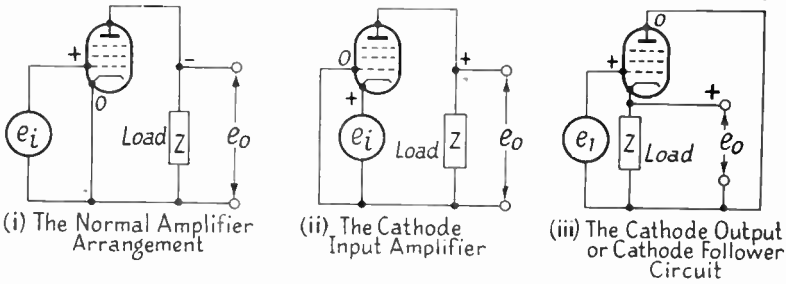

FIG. 2.7A. THE THREE BASIC OPERATING CIRCUITS OF AN AMPLIFIER VALVE

Steady feed voltages have been omitted. The signs indicate relative signal polarities. The "earthy" electrode is indicated by the letter "O."

electrode (the cathode), the grid, and the anode respectively, these last two electrodes being connected to the input and output signal loads. The second and third arrangements differ fundamentally from the conventional circuit in having the one load common to both input and output circuit loops so that inverse feedback occurs and reduces the effective input.[19]

2.8. The Cathode-input ("Grounded-grid") Amplifier. While the reversal of the normal input connections to an amplifier valve, i.e. the application of the signal voltage to the cathode rather than to the grid and the "grounding" of the control grid, makes no difference to the degree of control exerted on the space current by the actual grid-cathode p.d., several different features result by comparison with the more familiar method of connection.

The cathode-input arrangement appears to have been used

first by E. L. C. White and J. Hardwick* in television synchronizing circuits where it is often desired to increase the amplitude of the signal by an amount within the capacity of a single valve but without reversal of the signal polarity. It will be clear that if, for example, the cathode potential is raised in the positive direction the effect is as if the grid potential of a normal amplifier were made more negative, the anode current will therefore decrease and the anode potential will rise. Thus a positive change of input will produce a positive change of output, and similarly for a negative change, provided that the valve is operating above the anode current cut-off value.

It should be noted that unless the signal fed to the cathode appears across a circuit of zero impedance there will be a certain amount of feedback in opposition to the input. Thus when the cathode potential is raised the anode current in falling causes a reduction in the potential drop, due to the output current, developed across the signal source impedance. Assuming, for simplicity, that this feedback is negligible, as when the signal source is of very low impedance, the fact that the input and output voltages occur in the same (the output) circuit loop and act in the same direction ("series-aiding") makes the basic gain of the circuit greater by unity (i.e. $A + 1$ instead of A) than that of the conventional amplifier. This result is similar to that obtained by connecting the secondary of a transformer in series with the primary in the direction making the primary and secondary p.d.'s additive.

An important feature of the arrangement—and one which represents a serious disadvantage in some applications—is its low input impedance; this is given approximately by the ratio r_a/μ, when r_a is very much larger than the anode load, as is usually the case in wide-band circuits. The reason for the low impedance will be clear when it is realized that the input voltage appears in full not only between grid and cathode but also (still assuming $r_a \gg z_o$) across anode and cathode. The *effective* signal *voltage* acting in the output circuit is therefore multiplied by the factor $\mu + 1$ (obtained by referring the

* British Patent No. 496872.

grid-cathode p.d. to the anode-cathode circuit). Expressed more realistically the *actual signal current* for a given signal voltage is multiplied by the same factor and consequently the load presented by the valve on the signal source is r_a multiplied by $\left(\frac{1}{\mu + 1}\right)$, which is very nearly equal to r_a/μ (see Appendix I, § A.1.4).

The grounding of the control grid reduces the inter-electrode capacitive feedback between output and input circuits (Miller

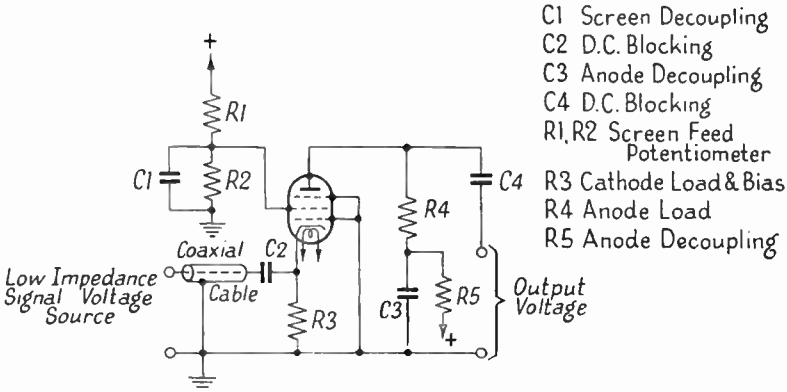

FIG. 2.8A. A PRACTICAL GROUNDED-GRID AMPLIFIER

The component values employed will depend on the frequency and bandwidth of the signal.

effect) to such an extent that the circuit may employ a triode valve even for U.H.F. use. The control grid behaves in a similar manner to the screen of a tetrode or pentode and may, moreover, in special valve designs form an integral part of the outer earthed metal screen of the valve rather than be earthed externally through a capacitor as in the case of the screening grid of a normal valve. The grounded-grid triode radio-frequency amplifier was used extensively in the first stage of radar receivers to achieve a better signal-to-noise ratio than is obtainable with a tetrode or pentode type valve (see Chapter VI). For this reason it will find increasing favour with television receiver designers since, as in radar reception, the wide frequency band required accentuates the noise problem. A practical arrangement is shown in Fig. 2.8A.[12, 17]

2.9. The Cathode-output ("Cathode-follower") Amplifier. The third arrangement, due to A. D. Blumlein,* differs yet again in basic properties from the normal amplifier circuit. In this case the signal is applied between grid and earth in the usual manner but the whole of the output circuit load is placed between cathode and earth, leaving the anode effectively at earth potential.

When the input voltage changes in (say) the positive direction the anode current rises but not to the extent that it would in a normal amplifier (i.e. one without a cathode load), because the increased voltage drop across the cathode load, in making the cathode follow in the same direction (positive) as the grid, restricts the actual change in grid-to-cathode p.d., which, of course, is the controlling factor in the amount of anode current change. The signs placed on Fig. 2.9A for this change of input voltage confirm that the input and output voltages which act in series between grid and cathode are actually in opposition. A negative change of input voltage causes the cathode potential to fall in sympathy. The signal is therefore reproduced across the cathode load and, as in the case of the cathode-input stage, without change of phase. With regard to relative signal amplitudes, it will be obvious that (*a*) the output voltage cannot exceed the input voltage, and (*b*) the grid-cathode p.d. added to the output voltage will equal the input voltage. The stage gain will, therefore, always be less than unity. This result does not imply that the valve itself fails to amplify; that it does amplify is shown by the fact that the output voltage is considerably larger than the actual grid-cathode p.d. for all except very small values of cathode load and increases as the latter is raised. The actual gain is $\mu/(\mu + 1)$ (nearly),

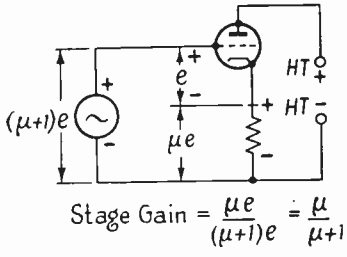

FIG. 2.9A. THE RELATIVE AMPLITUDES AND POLARITIES OF THE SIGNAL VOLTAGES IN A CATHODE FOLLOWER

* British Patent No. 448421.

where μ is the amplification factor of the valve. A useful aspect of the cathode follower is that it may be regarded as an "amplifier" in which the entire output voltage is fed back in opposition to the input (i.e. 100 per cent negative feedback). Two valuable properties of the cathode follower are its high input impedance and low output impedance by comparison with the corresponding impedances occurring when the same valve is used with the normal amplifier connection.

The high input impedance will be understood when it is

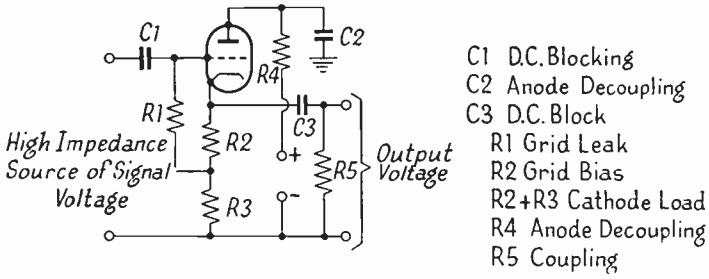

FIG. 2.9B. A TYPICAL PRACTICAL CATHODE-FOLLOWER CIRCUIT

remembered that of the entire input only a small fraction appears across grid and cathode; the input impedance of the valve (i.e. chiefly its grid-to-other-electrodes capacitance) is, therefore, in effect tapped down the grid load developing the input voltage, and the load on the source of the latter is correspondingly reduced. The low output impedance is due basically to the fact that, the H.T. + line being at earth potential from the signal point of view, the anode-cathode impedance of the valve is in parallel with the cathode resistor, and since the latter may be only a few hundred ohms, due to the parallel connection the total output impedance will be even less than this figure. The output impedance is further reduced by the fact that, due to the effect of the grid, the effective value of the anode impedance is reduced by the factor $\frac{1}{\mu + 1}$. As already noted, similar reasoning accounts for the low input (cathode to ground) impedance of the cathode-input stage. A practical circuit is given in Fig. 2.9B.[13, 14, 15, 18].

2.10. The "Bootstrap" Circuit. Before making a comparison of the three basic circuits another possibility which lies intermediate between cases (i) and (iii) must be mentioned. If the load of circuit (i) is connected on the cathode side of the valve so that the anode is earthy and both grid and cathode are left "floating," the arrangement shown in Fig. 2.10A results. It differs from the normal amplifier in producing no reversal of signal polarity and from the cathode follower in having a possible gain of the same order as the normal amplifier.

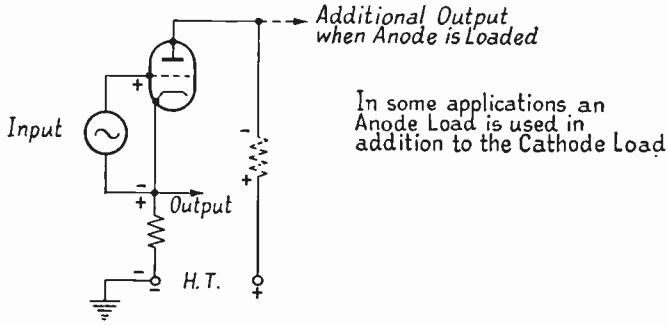

FIG. 2.10A. BASIC ARRANGEMENT OF THE "BOOTSTRAP" METHOD OF OPERATING AN AMPLIFIER

The fact that a positive increase in grid potential causes a much larger rise in the cathode potential, thus lifting the absolute potential of both terminals of the signal source, has given rise to the name "bootstrap." Its use is limited by the fact that both sides of the signal source must be floating but a suitable feed is readily provided when the stage is fed from the anode circuit of a preceding stage. It was developed by Newsam* for time-base linearization and for providing a balanced two-phase output in electrostatic C.R.T. deflection amplifiers.

2.11. Comparison of the Three Basic Valve Arrangements. It will be useful to compare the properties of the three basic amplifier configurations described in the preceding sections because such a comparison has led to the development of important practical arrangements in which the basic types are associated so as to combine their respective advantages.

* British Patent No. 493843.

TABLE IV: COMPARISON OF PROPERTIES OF BASIC VALVE CIRCUITS

Property	Normal Amplifier	Grounded-grid	Cathode Follower
Amplification	Normal	Slight Increase	*Less* than unity
Polarity change	*Reversed*	*None*	*None*
Input Impedance	Normal	*Very Low*	*High*
Output Impedance	Normal	Increased	*Very low*

A schematic comparison, taking the normal amplifier as a standard, has been drawn up in Table IV. A more precise analysis is given in Appendix I, § 3. The table should not be

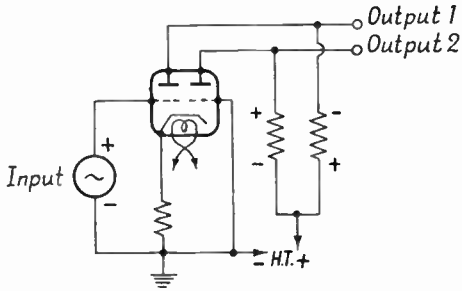

FIG. 2.12A. THE CATHODE-COUPLED DOUBLE-TRIODE AMPLIFIER

interpreted too rigidly—in particular, purely resistive signal loads are assumed.

The table brings out clearly the complementary features of the cathode follower and the cathode-input amplifier. The low output impedance of the former makes it a suitable driver for the latter and the combination provides an amplifier having two important advantages over the conventional arrangement, viz. higher input impedance and no reversal of signal polarity. The fact that two valves are required instead of one is offset by the possibility of employing triodes which can easily be built into a single envelope—many such valves having separate or common cathodes are, in fact, commercially available.[19]

2.12. The Cathode-coupled Double-triode Amplifier. The basic circuit of the combination amplifier just introduced is given in Fig. 2.12A. It was developed by A. D. Blumlein. The input signal is applied between the grid of triode I and earth,

while the output is taken from the anode of triode II. The two triodes are directly coupled by the common cathode resistor, and the important feature of the circuit is that the two anode signal currents, being similar in amplitude but in anti-phase practically cancel and the consequent absence of feedback allows the common cathode load to be made quite large provided adequate H.T. is available to make good the voltage loss across it.

The chief applications of the cathode-coupled double-triode arrangement in television receivers are in the discharge circuit of time-base wave generators (as a multivibrator) and in the synchronizing system; it will probably also find increased use in the signal amplifier circuits.[16, 19, 20]

BIBLIOGRAPHY

Waveform Theory:

(1) EAGLE, A. *Fourier's Theorem and Harmonic Analysis.* Longmans (1925).

(2) SHEA, T. E. *Transmission Networks and Wave Filters*, Pt. III. Van Nostrand (1929).

(3) SOKOLNIKOFF, I. S. and E. S. *Higher Mathematics for Physicists and Engineers*, Ch. VI. McGraw-Hill (1936).

(4) LOCKHART, C. Television Waveforms. *E.E.* June (1942) 19.

(5) CLARKE, A. More Television Waveforms. *E.E.* Nov. (1942) 245.

Waveshaping Circuits: Transient Analysis:

(6) KURTZ, E. B., and CORCORAN, G. F. *Introduction to Electric Transients.* Wiley (1935).

(7) PUCKLE, O. S. *Time Bases*, Appendix IV. Chapman and Hall (1943).

(8) FRANK, E. *Pulsed Linear Networks.* McGraw-Hill (1945).

(9) SCROGGIE, M. G. The Short-time Constant Circuit. *W.W.* Dec. (1945) 358–361.

(10) WILLIAMS, F. C. Introduction to Circuit Techniques for Radiolocation. *J.I.E.E.* Pt. IIIa, No. 1 (1946) 289.

(11) MARKUS, J., and ZELUFF, V. (Eds.). Pulses, *Electronics for Engineers*, § XVI, p. 211. McGraw-Hill (1945).

Basic Valve Circuits:

(12) STRONG, C. E. The Inverted Amplifier. *E.* July (1940) 54.

(13) WILLIAMS, E. The Cathode Follower Stage. *W.W.* July (1941) 176.

(14) LOCKHART, C. E. The Cathode Follower. *E.E.* Dec. (1942) 287–293; Feb. (1943) 375.

(15) RICHTER, W. Cathode Follower Circuits. *E.* Nov. (1943) 112.

(16) WILLIAMS, E. The Cathode-coupled Double-triode Stage. *E.E.* May (1944) 509.

(17) DISHAL, M. Theoretical Gain and Signal-to-noise Ratio of the Grounded-grid Amplifier at Ultra-high Frequencies. *P.I.R.E.* May (1944) 276.

(18) SCHLESINGER, K. Cathode Follower Circuits. *I.R.E.* Dec. (1945) 843.

(19) SZIKLAI, G., and SCHROEDER, A. C. Cathode-coupled Wideband Amplifiers. *P.I.R.E.* Oct. (1945) 701.

(20) PULLEN, K. A. The Cathode-coupled Amplifier. *P.I.R.E.* June (1946) 402.

CHAPTER III

THE PICTURE TUBE AND ITS AUXILIARY CIRCUITS

3.1. Laws of Electron Motion in Electric and Magnetic Fields. The processes occurring inside the cathode-ray tube on which the received picture is reconstituted are governed by the laws of motion of the electron in steady electric ("electrostatic") and magnetic ("magnetostatic") fields. The cathode-ray beam is formed, "prefocused," and controlled in intensity by electrostatic fields in the "gun" portion of the tube, but subsequent main focusing and deflection is usually done magnetically.

An electrostatic field makes its presence felt by its effect on an electrically charged body such as an electron. At every point in the field the force exerted acts in a definite direction and with a certain strength and it is helpful to think of the field as a system of lines of electric force running in the direction of the force and corresponding in number per unit area to the field intensity. The strength and direction of the force are connected with a more fundamental quantity called the potential, which, at any point, is measured by the energy required to bring a unit electric charge from a point outside the field up to that point, work being done against the force exerted by the charges producing the field. Another useful conception is that of the surface of equal potential, i.e. the surface formed by all points having the same potential. The "equipotential" surface at any point is perpendicular to the line of electric force passing through it. When an electron is free to move in an electric field it travels along the lines of force and, therefore, at right angles to the equipotentials. The advantage of thinking in terms of the latter is that they can be estimated or measured for an actual electrode system more easily than the lines of force. A simple example of these basic ideas is provided by a single point charge (Fig. 3.1A); its

lines of force (or "electric flux") run radially in all directions while the equipotentials form successive concentric spherical shells around it. The trajectory of an electron free to move in such a field is a radial (straight) line inwards or outwards

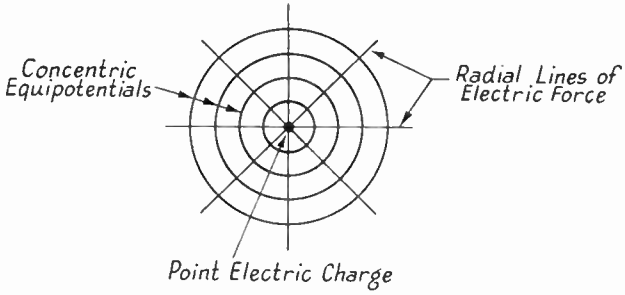

FIG. 3.1A. THE SIMPLEST FORM OF ELECTROSTATIC FIELD

The relationship between the direction of the lines of force and the surfaces of equal potential ("equipotentials") is clearly shown.

depending on the sign of the charge. The principle of electrostatic deflection and focusing is that when an electron moving in a field having a certain potential (v_1 say), and with a velocity corresponding to this potential, passes into a region at a different potential (v_2 say), it is deflected at the boundary

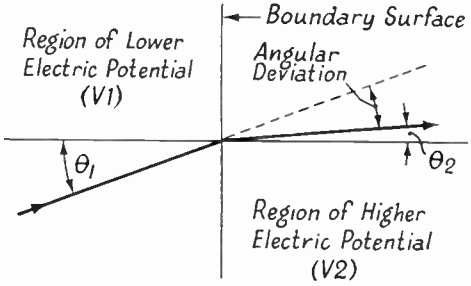

FIG. 3.1B. THE REFRACTION OF ELECTRONS

An electron passing to a region of higher potential along a path oblique to the boundary between the two regions is refracted towards the perpendicular through the point where the boundary is crossed. The potential throughout each region is constant.

between the two regions by an amount which depends on the ratio v_2/v_1. If v_2 is higher than v_1, for example, the electron velocity will increase and the natural tendency of the electron to move normally to the equipotentials causes it to bend towards this direction (see Fig. 3.1B). In the special case of

an electron incident at right angles to the boundary there is no change in the direction of travel of the electron.

Motion of an electron in a magnetic field is more complex.* Again, it is best to regard the field as a system of lines of force ("magnetic flux") representing, point by point, the direction and intensity of the field. The fundamental law is that the force exerted at any instant on the moving electron, due to the interaction of its magnetic field with the independently produced field in which it is moving, is perpendicular both to the

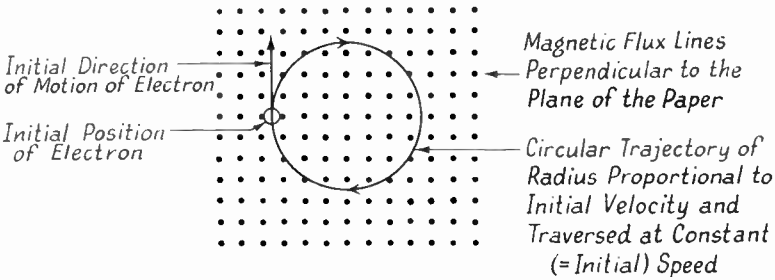

FIG. 3.1C. ELECTRON MOTION IN A MAGNETIC FIELD

The simplest case of electronic motion in a uniform magnetic field is illustrated above, where the lines of flux run vertically into the paper. If the flux is reversed the circular path lies to the left of the initial direction of motion.

instantaneous velocity of the electron and to the direction of the field (see Fig. 3.1C). A convenient way of memorizing this law is provided by Fleming's Left-hand Rule: If the *F*irst finger of the left hand is pointed in the direction of the magnetic *F*ield and the se*C*ond finger in the direction of the *C*urrent (i.e. the opposite direction to that of the electron velocity), then if the thu*M*b is held at right angles to the two fingers it will point in the direction of the resultant Motion (see Fig. 3.1D). Apart from the limited flexibility of the hand it is difficult to use this law to determine the actual path of an electron in a given field, even when the latter and the starting conditions of the electron are both known, because as the electron turns under the influence of the interaction force the latter turns with it, for the three factors involved must remain mutually perpendicular. It is not difficult to prove, however, that when

* See Appendix I (§A1.4).

an electron is set moving with a constant speed in a magnetic field and in a direction initially at right angles to the lines of force it will curl round the latter in a circular path whose radius is proportional to the electron's speed and inversely proportional to the strength of the field; the time taken to complete one circuit depends only on the field strength. This simple case is illustrated in Fig. 3.1E, for the case of an electron beam entering a field of limited extent normally; it emerges with a changed direction (but with unchanged speed) having followed a circular arc while passing through the field—this is the case of electromagnetic beam deflection used in the cathode-ray tube. The application to focusing will be deferred since it will be desirable first to consider the general action of the tube as a whole before going into detail.[1, 2, 3]

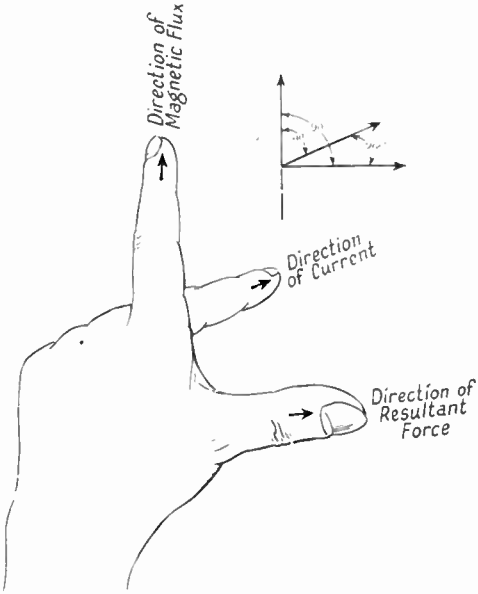

FIG. 3.1D. FLEMING'S LEFT-HAND RULE

An electron crossing a magnetic field at right angles is acted upon by a force perpendicular both to the field and to the direction of motion of the electron. The three directions may be represented by holding the thumb and first two fingers of the left hand mutually at right angles.

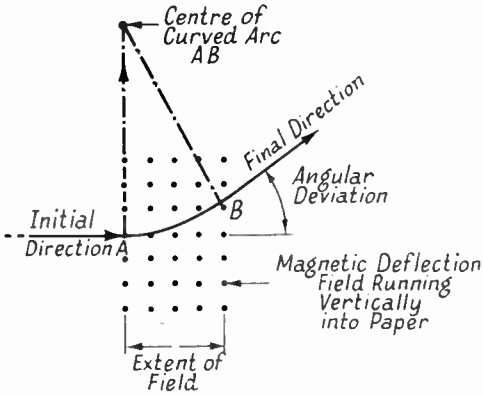

FIG. 3.1E. DEVIATION OF A MOVING ELECTRON BY A LOCALIZED FIELD

3.2. Functional Description of the Picture Tube. The processes involved in the production of the finely focused spot on the screen of the cathode-ray tube is shown schematically in Fig. 3.2A; they are as follows—

(i) A cathode emits electrons which collect in a thin film ("space charge") over the cathode surface.

(ii) An electrode, called the anode or accelerator, placed a short distance away from the cathode, and charged to a very high positive potential relative to the cathode, draws electrons out of the space charge and sets them moving with high velocity down the tube.

(iii) A negatively charged (relative to the cathode) electrode called the grid or modulator (see (iv)), placed between the cathode and anode, shaped and positioned in such a manner that it sets up an electrostatic field pattern in front of the cathode, curved (Fig. 3.3A) in such a manner that the initially divergent electron stream drawn away by the anode is sufficiently "prefocused" (*a*) to pass through an aperture in the anode and (*b*) to limit the cross-sectional area of the beam entering the main focusing field beyond the anode.

(iv) The grid also serves to control the intensity of the beam of electrons set up by the anode and cathode. If its potential is made sufficiently negative it will neutralize the attractive effect of the anode on the space charge and will therefore cut off the beam. As its potential is raised from this "cut-off" value the beam intensity increases. The maximum intensity is set by the falling off in the prefocusing action mentioned in (iii).

(v) The controllable, narrowly divergent, fast-flowing beam emerging from the anode passes into the main focusing field. This is a region of magnetic flux, of which the representative "lines" run parallel to the axis of the tube, set up by direct current flowing through an external inductor or a surrounding permanent magnet. This field must be of uniform intensity but its direction (left to right, or right to left) is immaterial; its strength will determine the distance the beam has to travel before reaching the focal point.

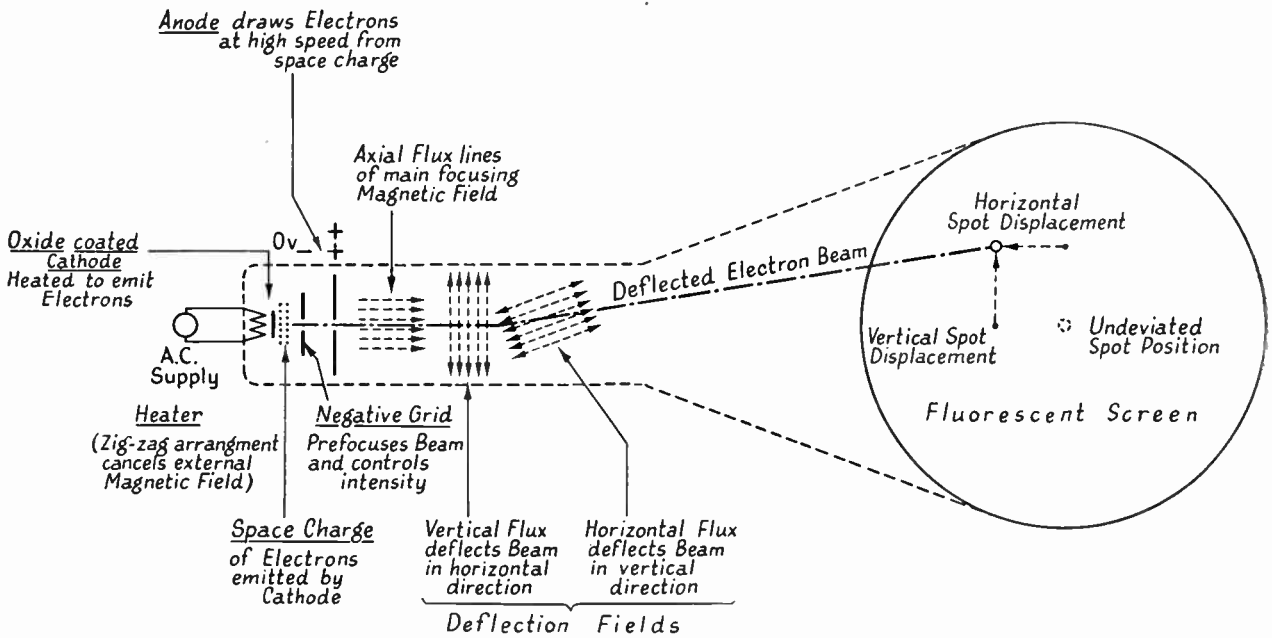

FIG. 3.2A. FUNCTIONAL SCHEMATIC OF THE PICTURE TUBE

(vi) Deflection of the beam is accomplished by setting up magnetic fields in which the force "lines" run perpendicularly to the axis of the tube. The direction of deflection is at right angles both to the tube axis and to the field direction. In practice two deflection fields are used so that by horizontal and vertical displacements the beam may be made to strike the screen at any desired point.

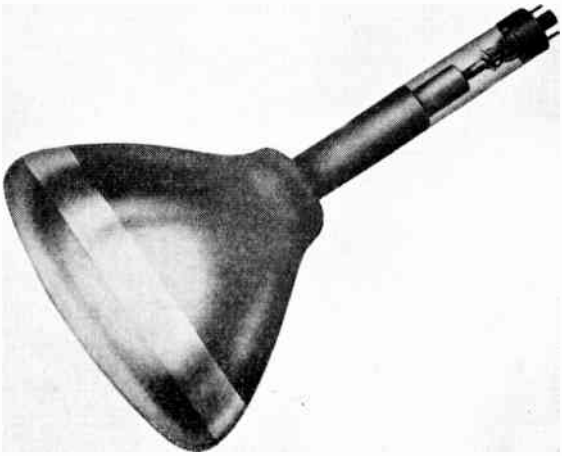

FIG. 3.2B. MAZDA CRM 121 (TWELVE-INCH) PICTURE TUBE
(*Courtesy of Edison Swan Electric Co., Ltd.*)

(vii) At the point where the beam strikes the coating on the back of the tube face a spot of light is produced by fluorescent action. The beam and spot intensities are approximately proportional to each other so that when the vision signal is applied between grid and cathode the screen spot intensity varies similarly.

(viii) Finally the electrons flow in a slow diffuse stream away from the screen and are picked up at the tube walls by an inner conductive coating and taken back to the tube anode.

These processes occur in an evacuated space enclosed by a glass envelope whose general shape differs considerably between the directly viewed type of tube generally employed and the

considerably smaller projection type now coming into use. A good example of the former type is the Mazda CRM 121 (Fig. 3.2B), whose cross-sectional shape was shown in Fig. 1.6A; this tube is 18 in. in overall length and has a screen diameter of 12 in., while its "neck" is 6·9 in. long and 1·4 in. in diameter. Directly viewed tubes for home receivers have screen diameters ranging from 9 in. to 15 in. and employ accelerating potentials ranging from 5 to 10 kV. A typical projection tube (E.M.I.) is shown in Fig. 3.2C. While its neck is as large and often longer than that of the larger type its bulb is cylindrical and of the order 3–5 in. in both length and diameter. Electrically the two types of tube do not differ considerably in structure or in method of operation, but the brilliant picture necessary for projection requires a considerably higher accelerating voltage (20–30 kV).

FIG. 3.2C. AN E.M.I. PROJECTION TUBE
(*Courtesy of E.M.I., Ltd.*)

In both cases the use of electromagnetic focusing and deflection leads to a very simple internal electrode system consisting

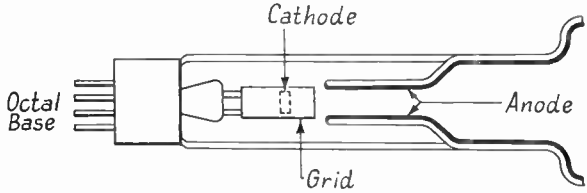

FIG. 3.2D. GENERAL ELECTRODE ARRANGEMENT OF THE MAZDA CRM 121 PICTURE TUBE

only of the heater, cathode, grid, and anode structure mounted on a glass pinch. In the Mazda tube the anode takes the form of a metal deposit on the inner side of a cylindrical extension of the bulb (see Fig. 3.2D).

The tube is mounted in the receiver cabinet horizontally, or with a slight upward tilt, and is gripped at the screen end in a tight-fitting rubber moulding (the "mask" of which exposes an area of the screen of the largest rectangular shape and of

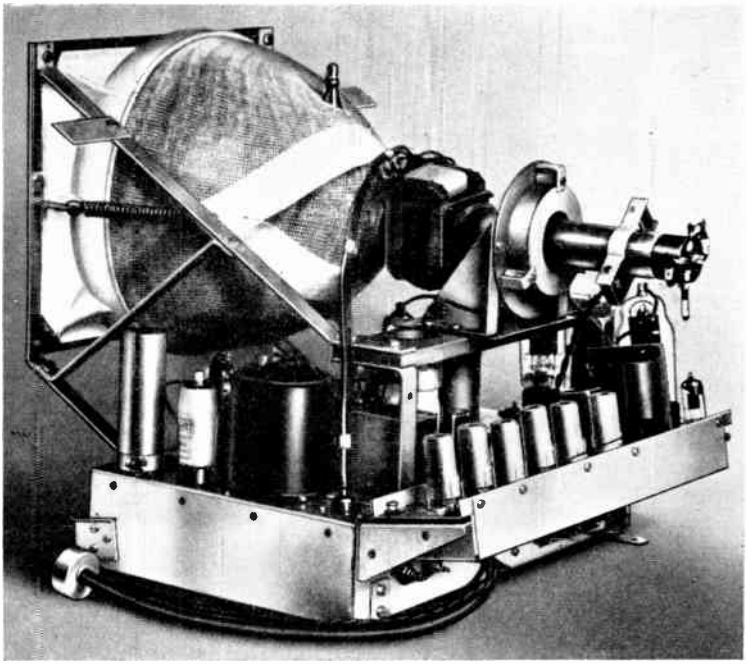

FIG. 3.2E. THE COSSOR MODEL 902 RECEIVER

This illustration shows clearly the normal method of mounting a directly-viewed tube. Special features are the anti-implosion net and magnetic ion trap (near the tube base). (See also Fig. 8.1B.)

(*Courtesy of A. C. Cossor, Ltd.*)

correct aspect ratio). The neck end of the tube is usually supported by the focusing assembly (see Fig. 3.2E). The once popular method of mounting the tube vertically upwards and viewing the picture in a mirror mounted in the raised receiver lid at an angle of 45 degrees (see Chapter VIII) has lost favour, although the mirror has reappeared as an element in the new projection systems.

It is usual practice to protect the viewer from implosion of the large directly viewed tube by fixing a thick sheet of unsplinterable glass over its face.

3.3. The Gun: Prefocusing and Intensity Control. With this general picture of the tube action in view it will be possible now to consider the detailed theory of the various parts of the tube, on the basis of the laws of electron motion already given.

Invariably the cathode is indirectly heated, to allow the use of an equipotential emitting surface, while the heater wire is wound in "bifilar" (i.e. in a double spiral) or zig-zag fashion to ensure that the magnetic field practically cancels; by these two devices the cathode region is freed from spurious fields.

The prefocusing mentioned above is necessary since it is not possible to obtain adequate emission from a "point" cathode. By suitable shaping and setting the potential of the grid the equipotential surfaces between it and the cathode curve backwards towards the latter (see Fig. 3.3A). Consequently the electrons drawn towards the grid aperture by the attraction of the anode converge towards a "crossover" point and then diverge again as they proceed down the tube. The formation of the crossover also helps the focusing problem by limiting the angle of divergence of the beam entering the main focusing field. The cathode-grid-anode system forms what is called an "immersion" lens in electron optics. The crossover is very close to the cathode but its position varies with grid voltage; as the latter is reduced (i.e. made *less negative*), the cross-sectional area of the crossover increases and the degree of focusing obtained becomes inadequate.

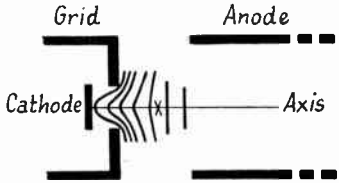

FIG. 3.3A. PREFOCUSING OF THE ELECTRODE BEAM

The backward curvature of the equipotentials in the cathode-grid space prefocus the cathode to a "cross-over" in the grid-anode region (X).

Variation of the grid potential is necessary, however, since it is by this means that the spot intensity is varied in order to recreate the picture; the defect just noted sets a limit to the maximum picture brightness.

The action of the grid in controlling the beam intensity is similar to that of the control grid of an amplifier valve; in

fact, the gun as a whole (i.e. cathode, grid and anode) functions similarly to a triode valve except that the anode does not collect the forward beam current. This similarity is apparent in the grid-volts *v.* beam-current characteristic of the tube, any nonlinearity in which causes picture brightness distortion. A typical characteristic (Mazda CRM 121) is shown in Fig. 3.3B

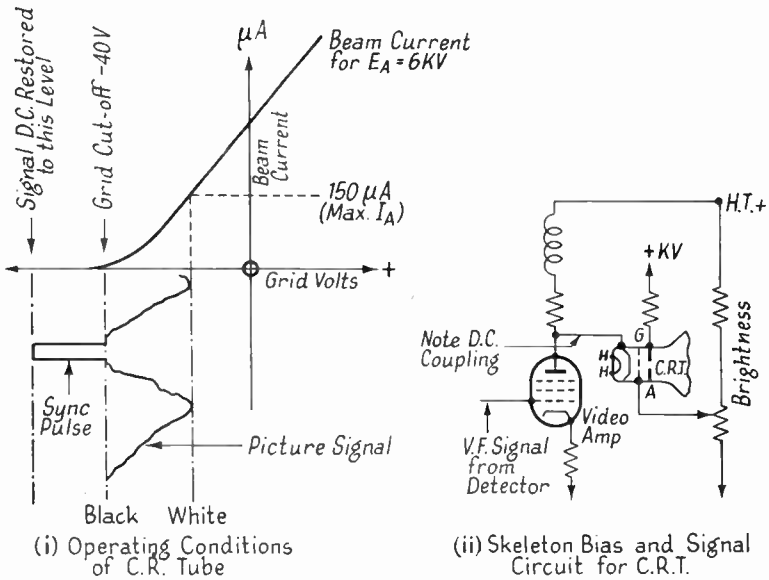

FIG. 3.3B. SIGNAL OPERATING CONDITIONS

—the maximum beam current for this tube is specified by the manufacturer as 150 μA.[3]

3.4. The Main Focusing System: Theory of Focusing. The gun structure is very much the same in all types of low-voltage cathode-ray tube, but the television tube differs from, for example, the oscilloscope type of tube in having a magnetic main focusing system. The latter is inherently capable of focusing satisfactorily a broader and more intense beam than electrostatic lens systems but suffers from the disadvantage of being bulky and heavy and, in its most common form, of requiring a source of current of the order of 50–100 mA.

It will be best to approach the theory of the focusing action

through a simple idealized case. Suppose that the axial magnetic field required for focusing extends throughout the tube interior and is constant in strength and direction. If an electron sets off from the cathode exactly along the tube axis the magnetic field will have no effect upon it (which is as desired), because the electron has no component of velocity perpendicular to the field. If an electron diverges from the axis, however, the magnetic field immediately acts upon it and changes its motion. The result can conveniently be determined only by

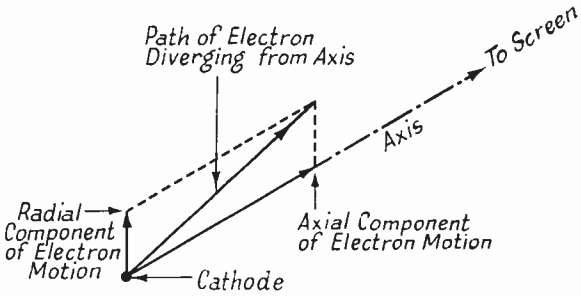

FIG. 3.4A. COMPONENTS OF ELECTRON MOTION IN THE CATHODE-RAY TUBE

considering the component velocities of the electron, as shown in Fig. 3.4A. Viewed from the side of the tube there will be two components of the initial velocity, one along the axis (which is unaffected by the field), and the other perpendicular to it (i.e. in the radial direction). It has been shown (§ 3.1) that an electron moving at right angles to a field traverses a circular path and goes through its starting point once per orbit. In the case under consideration the radial component of initial velocity will, owing to the effect of the field, develop into a circular motion and, because of the axial component of velocity, this rotation will be accompanied by a simultaneous axial movement. The complete trajectory will, therefore, be a helix (Fig. 3.4B) and the electron will return to the axis once per helical turn. Since the time taken to complete the latter is independent of the amount of the initial radial motion all electrons will return to the axis at the same points. Successive points are separated in time by an amount depending only

on the field strength, and, in distance, by an amount depending both on the field strength and on the axial velocity of the electrons. With a given anode potential deciding the axial

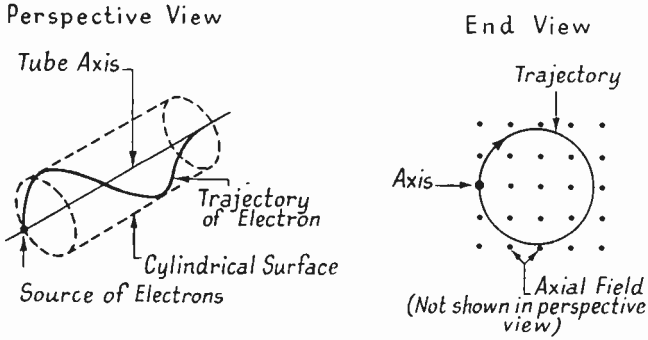

FIG. 3.4B. FOCUSING ACTION IN A FIELD EXTENDING OVER THE ENTIRE LENGTH OF THE TUBE

velocity the first focal point can be brought into the plane of the fluorescent screen by adjustment of the magnetic field strength.

In certain types of camera tube the magnetic field is required to extend over the whole length of the tube, but in the case of the picture tube this is impracticable and unnecessary. The magnetic focusing field occupies only a small length of the tube and the flux distribution and its components are of the form shown in Fig. 3.4c. Along the tube axis the field strength is purely axial but varies rapidly in strength from zero through maximum to zero again, while at every point off the axis the field has a radial component. If the latter is disregarded and the field assumed to be purely axial, but of short length, it will focus divergent electrons in a similar manner to the ideal case just described and the helical motion imparted by the axial field will, if of the correct strength, take each electron through part of a complete turn and eject it at the instant it is travelling towards the axis as shown

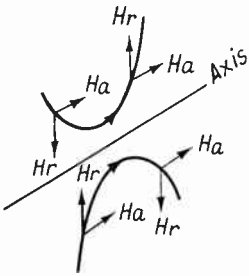

FIG. 3.4C. THE AXIAL (*Ha*) AND RADIAL (*Hr*) COMPONENTS OF A SHORT MAGNETIC FOCUSING FIELD

in Fig. 3.4D. The effect of the radial component of the field is to augment considerably the component of electron motion across the axial field and is best considered in two steps, thus—

(i) The axial velocity component in tending to curl round the radial flux begins to move perpendicularly to its own direction and to that of the flux.

(ii) This new component of motion acts at right angles to the axial flux (as does the initial radial component of electron velocity) and therefore tends to curl round it with consequent

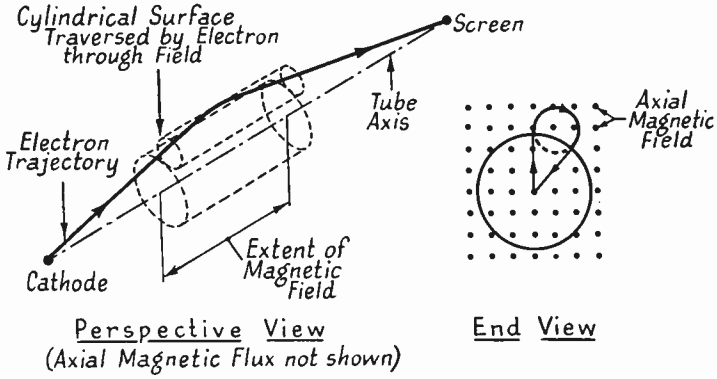

FIG. 3.4D. FOCUSING ACTION IN A SHORT MAGNETIC FIELD

helical motion. The resultant helical motion is therefore due partly to (*a*) interaction of initial radial velocity and axial field and (*b*) interaction of the induced transverse velocity (due to interaction of radial flux and axial velocity) and axial flux. The essential factor in magnetic focusing is, therefore, the existence of an axial magnetic field and the degree of focusing can be expressed in terms of it alone. The important practical points are that it need not extend over the entire tube axis and may act in either direction.[1, 4]

3.5. The Main Focusing System: Practical Arrangements. The required axial field may be provided by a current-carrying solenoid, by a permanent magnet or by a combination of both. The purely electromagnetic method provides a simple and inexpensive arrangement and the field produced is readily controlled by varying the current; on the other hand, it

absorbs considerable power (e.g. 50 mA at 50 V = 2·5 W, in a typical case) continuously from the receiver power supply, which power is dissipated in heat and increases thermal instability. Also, the inductor current varies with change of load

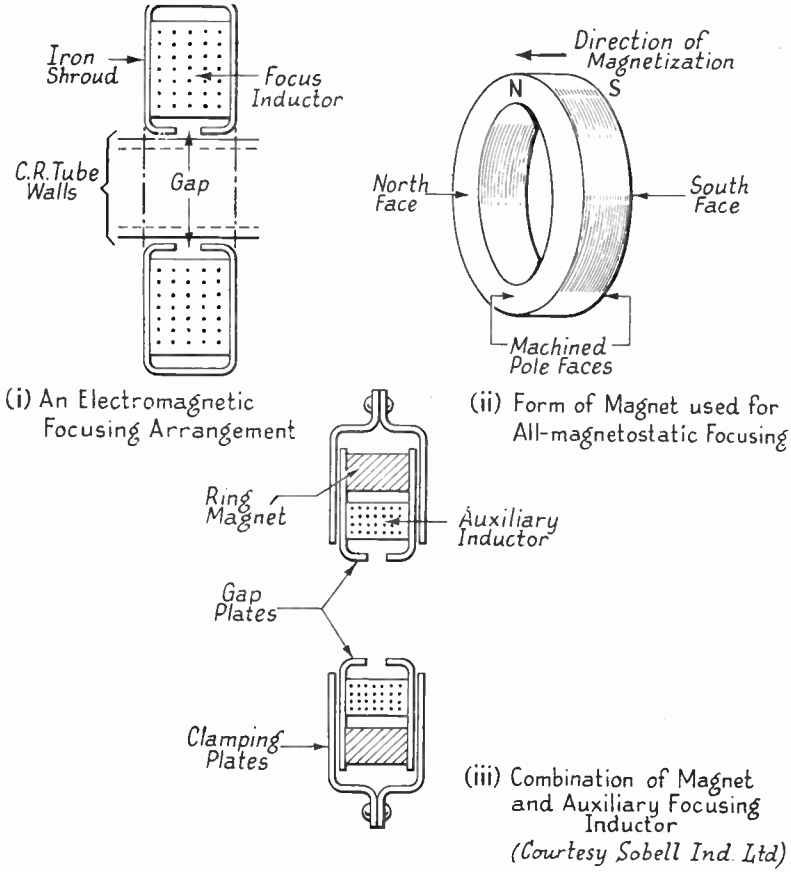

FIG. 3.5A. PRACTICAL FOCUSING ARRANGEMENTS

on the H.T. supply unless an independent current source is used; further, the variable resistor required for control of focus must have a high wattage rating. The use of a permanent magnet overcomes all these disadvantages at the cost of not being readily controllable; other disadvantages are that its mechanical construction is more elaborate and needs to be of

closer tolerance in dimensions. It is more expensive owing to the use of magnetic material and its processing equipment which is not normally available in a radio works. Again, there

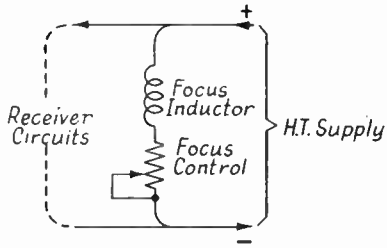

Control Circuit for High Resistance Type Focus Inductor

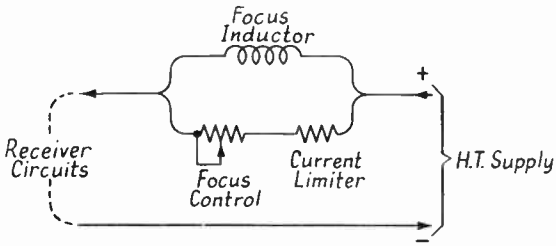

Control Circuit for Low Resistance Type Focus Inductor

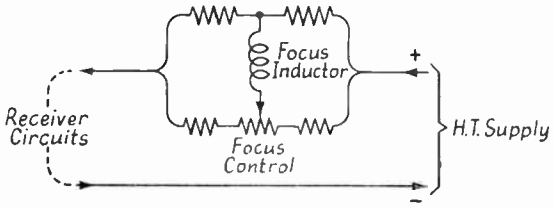

Control Circuit for Auxiliary Focus Inductor

FIG. 3.5B. FOCUSING INDUCTOR CIRCUITS

is the difficulty of uniform initial magnetization and the possibility of subsequent loss of magnetization. An example of each arrangement is given in Fig. 3.5A, and suitable control circuits in Fig. 3.5B respectively. The coil is a multi-layer solenoid of rectangular cross-section contained in a soft-iron shroud having a gap of approximately $\frac{1}{4}$ in. in its inner side. The number of ampere turns required is usually from 400–800.

The equivalent magnetostatic arrangement employs a circular ring of rectangular cross-section, magnetized along its axis (i.e. perpendicular to the side faces), which is clamped between soft-iron "gap plates" as before. The construction is complicated, however, by the need for an adjustable gap or controllable leakage path. A simple device of the latter type used by Cossor is a soft-iron sleeve which slides on the tube neck and bypasses flux from the main gap to an increasing extent as it is pushed toward the magnet assembly. The most satisfactory (albeit most expensive) arrangement is a combination of the two basic methods; the main field is provided by a ring magnet of large diameter and a relatively small inductor placed inside the magnet carries a small current of controllable strength and direction which is adjusted by a panel control to bring the resultant field to the exact strength required.

The magnet and/or inductor assembly usually has adjustable three-point mounting on a vertical standard or plate so that its axis may be aligned with that of the tube; in practice this adjustment is normally used to centralize the raster in the screen mask. It is desirable to screen the focusing system from the deflector assemblies; the screen may be an integral part of the focusing system mounting. The latter provides a suitable rear support for the tube when, as is usual, the latter is mounted horizontally; the tube neck is normally gripped in a rubber ring or sleeve which fits the inner surface of the gap plates (see Fig. 3.2E).

The focusing system may be regarded as a lens which focuses the beam crossover (object) to a spot on the fluorescent screen (image). On this basis it will be understood that as the focusing assembly is moved toward the tube cathode the magnification of the image (spot) increases. The assembly is normally positioned so that at the normal viewing distance the line structure is barely discernible. This distance is of the order of 5 to 6 times the picture height, i.e. 4 ft for a 10 × 8 in. picture.

The current required for focusing is often obtained by bleeding the normal H.T. supply of the receiver and adjustment

achieved by a variable series resistor (Fig. 3.5B). Alternatively the H.T. current of one or more of the receiver circuits may be passed through the focus circuits; the variable resistor will then need to be parallel to the inductor. The combined method of focusing requires a small reversible current which may be derived from a form of bridge circuit.

3.6. The Deflection System. When the electron beam passes into the transverse deflection field it commences to move away from the axis and follows a circular path of large radius. The latter decreases, so that the spot displacement on the screen increases, either as the deflection field strength (which is proportional to the deflector ampere-turns) is increased or as the beam velocity (which is proportional to the square root of the anode voltage) is reduced. For a given field strength and final anode potential the angle of deviation increases with the axial length of the field. Finally, for a given deviation the spot displacement is proportional to the distance between the centre of the field and the screen. An advantage of magnetic deflection, by comparison with the use of voltage-operated internal deflector plates (as in oscilloscope tubes) is that the necessary current for wide deflection is more easily generated than the corresponding voltage. Accordingly, relatively short tubes are made possible.

Since the field strength due to a current-carrying coil is proportional to the product of the current and the number of turns (the "ampere-turns"), it would appear that a large number of turns could be employed in the deflection windings, thus allowing a small deflection current. While this is largely true in the case of frame inductors a limit to the number of turns is set for line inductors by the induced e.m.f. occurring during the flyback. At the end scan the flux around the inductor must be reduced to zero in a few micro-seconds. The rate at which the flux lines cut the inductor during this rapid collapse of the field is such that a very high voltage is generated. The latter is proportional to the inductance and also to the rate of decay of the deflection current, while the inductance is proportional to the *square* of the number of turns. Thus, if n (number of turns) is doubled, L is multiplied by 4, the

maximum current required is halved, and the rate of fall of current halved, so that the back e.m.f. is doubled. Clearly as n is reduced the back e.m.f. falls. Accordingly, the line deflectors have a comparatively small number of turns and carry a high

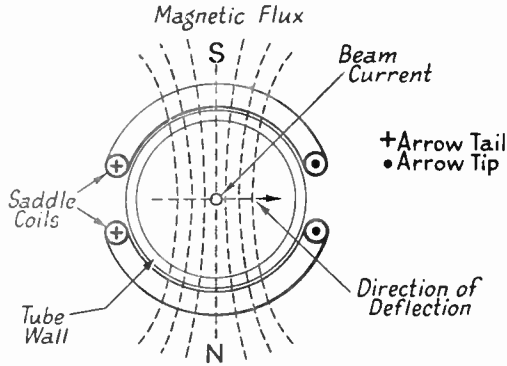

Cross-sectional View of Saddle Type Deflection Inductor. The Sections are Connected in Series

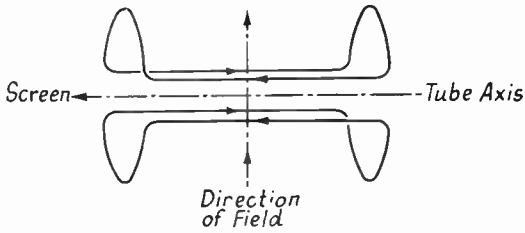

Perspective Sketch of Form of the Saddle Type Inductor (Shown as Single Turn)

FIG. 3.6A. THE SADDLE TYPE OF DEFLECTION INDUCTOR

current, i.e. their impedance is low, they are invariably of the saddle type and driven by a step-down transformer (5 to 10–1). Frame inductors may, however, be of high impedance and directly driven, thus saving a transformer.

The most important requirement in regard to the scanning inductors is uniformity of their magnetic fields, i.e. imaginary flux lines representing the latter must be parallel and evenly spaced in the region of the field traversed by the scan beam over the entire frame scan. The shape of the field produced by

an inductor depends on its "geometry" (form and arrangement of turns) and on its magnetic circuit and not appreciably on the current strength. The first step in achieving uniformity of the deflection fields is to split the inductors into series-connected halves arranged symmetrically one on either side of the tube neck. Using simple flat inductors the resultant field would

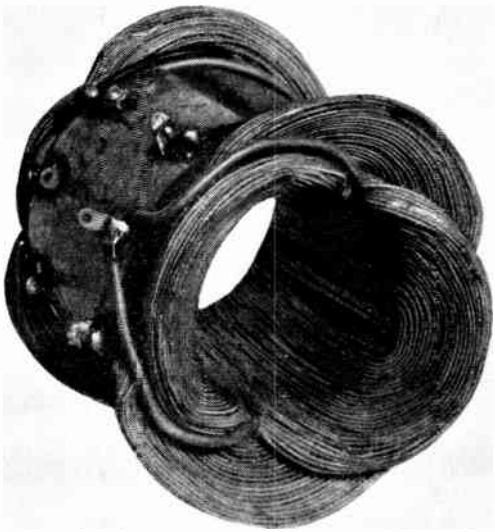

FIG. 3.6B. TYPICAL SADDLE INDUCTOR ASSEMBLY
(Courtesy of E.M.I., Ltd.)

still not be sufficiently uniform but a considerable improvement is obtained by bending each winding to fit closely the neck of the tube (see Figs. 3.6A and 3.6B). Both deflection windings are usually of this form, called "saddle" inductors; one pair (for frame deflection) is made shorter than the other to allow its ends to fit behind those of the longer pair. An alternative method is possible and is illustrated in Fig. 3.6C; in this case the flux distribution is controlled by a magnetic circuit in the form of a thick flat strip bent into a square box. Two opposite sides carry the deflection windings which are connected in opposition to make the remaining sides a pair of consequent

poles, as shown by the flux path in Fig. 3.6C. Inductor assemblies of this type are shown in Figs. 3.2E and 3.6G. A third form is the so-called "toroidal" type shown in Fig. 3.6D. In this arrangement each of the deflectors is split into four or eight

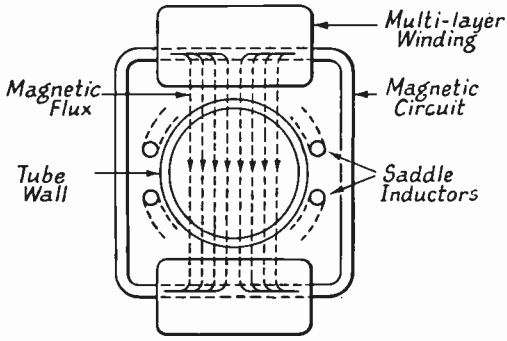

Cross-sectional View of Consequent-pole Type Deflection System

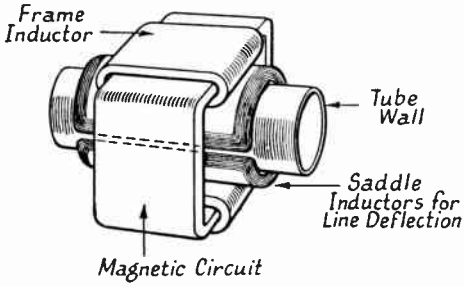

Perspective View of Combined Saddle Inductor and Consequent-pole Systems for Line and Frame Deflection Respectively

(Courtesy Sobell Industries Ltd.)

FIG. 3.6C. THE CONSEQUENT-POLE DEFLECTION SYSTEM

multi-layer sections which are spaced around the circumference of a laminated cylindrical core. The physical arrangement is clearly shown in the accompanying photograph (Fig. 3.6E) of an assembly developed by E.M.I. In this example each of the sections contains one X winding and one Y winding and the number of turns in each section are chosen to produce the most uniform resultant fields.

The spacing between adjacent sides of a saddle inductor is critical for uniformity of the resultant field. Some ingenious

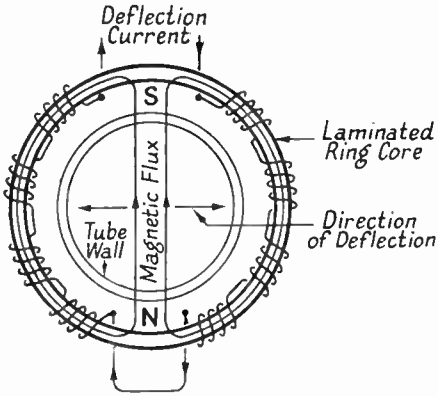

FIG. 3.6D. CROSS-SECTION OF A TOROIDAL DEFLECTION INDUCTOR

attempts have been made to improve this even further, e.g. by varying the shape of the cross-section of its sides, and by sub-

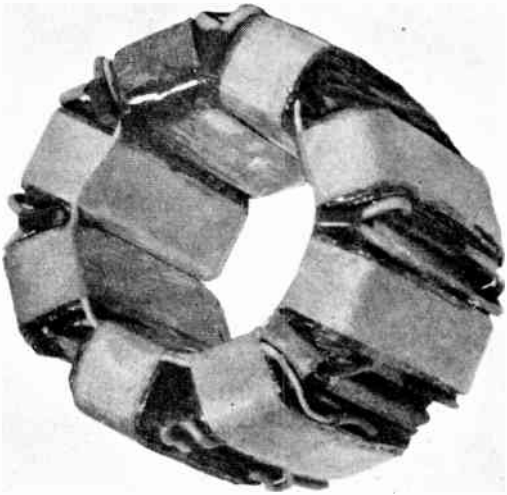

FIG. 3.6E. A TOROIDAL DEFLECTION INDUCTOR ASSEMBLY WITH CYLINDRICAL COVER REMOVED

(Courtesy of E.M.I., Ltd.)

dividing the inductor into a number of sections of different gauge wire. The result of non-uniformity of the deflection fields

is distortion of shape of the raster. This distortion takes either of two forms, called "barrel" and "pin-cushion," corresponding to the two possible forms of non-uniformity shown in Fig. 3.6F.

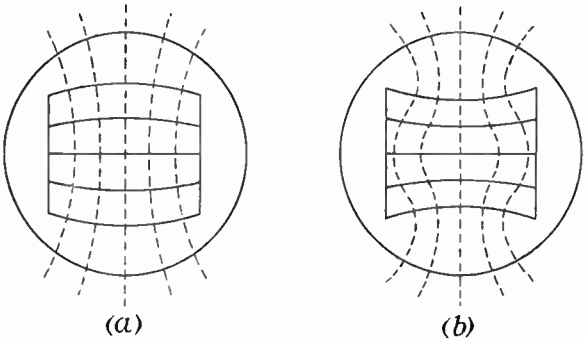

FIG. 3.6F. NON-UNIFORM FIELDS

Type (*a*) produces a barrel and type (*b*) a pin-cushion-shaped raster.

It is quite impracticable to achieve perfect uniformity in the deflection field, particularly at its boundaries. Another result is that the focusing of the electron beam is impaired

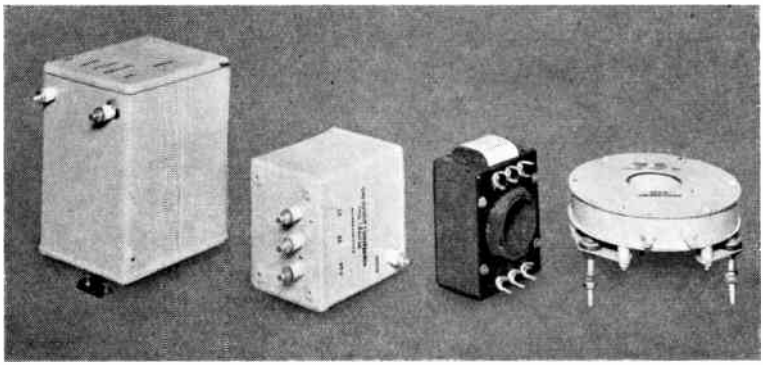

FIG. 3.6G. A GROUP OF PICTURE-TUBE AUXILIARY COMPONENTS

From left to right they are: an E.H.T. transformer; a line output transformer; a scanning-inductor assembly; and a focusing-inductor assembly.

(*Courtesy of Haynes Radio, Ltd.*)

and to an extent which increases with the field strength; this effect is called "deflection defocusing." The practical design problem is to limit the extreme deterioration occurring in the corners of the raster—one point is the need, in the case of

saddle inductors, to bring the ends away from the tube neck instead of making them fit it closely.

Because of the large gap presented by the tube neck the strength of the magnetic field produced by a scanning inductor cannot be considerably increased by the use of an "iron" circuit; on the other hand, the use of the latter is usually considered worth while. Where saddle inductors are used for both line and frame deflection they are often enclosed by a cylindrical ferromagnetic tube or a stack of pairs of U-shaped laminations. While normal materials such as stalloy would be satisfactory for the frame circuit, the drop in efficiency of these materials at line frequency requires the use of a nickel-iron alloy such as radiometal or mumetal (or equivalents).

The number of turns required is from 100–250 for saddle inductors and is of the order 2000–4000 for the high-impedance type. Both figures refer to one-half of each split pair. The corresponding wire gauges are of the order 28 and 42 S.W.G. respectively. The wire insulation is usually enamel, preferably with paper covering (P.C.E.) in the line case.

The complete inductor assembly is mounted on a tube of insulating material which slides over the tube neck; when stacks of laminations are fitted around the inductors a box frame is used to obtain a rigid assembly.[6, 7, 8]

3.7. The Fluorescent Screen. A wide range of materials (called "phosphors") possessing the property of emitting light under the bombardment of an electron beam is known. They differ in the colour of the light produced, in efficiency of conversion of the electrical energy of the beam into radiant energy and in the rapidity with which they respond to rapid variations of beam intensity. The need for white light, efficient energy conversion, and rapid response ("short afterglow" following cut-off of the beam) restricts the number of materials suitable for picture tubes. An approximation to white light can only be obtained by the use of two or more constituents. Thus cadmium tungstate fluoresces light-blue and white, zinc phosphate provides red; a suitable mixture of the two (with the former predominant) gives white. Another commonly used

material is zinc-cadmium sulphide activated by copper—or silver. Physically the screen material is of fine crystalline form; it is held to the screen face by a suitable adhesive such as sodium or potassium silicate.[11, 12]

The proportion of heavy negative ions normally present in the beam is deflected to a much lesser extent than the electrons, so that they bombard a relatively small area at the centre of the screen and, particularly if the tube is consistently used with little negative grid bias (i.e. high beam current), eventually produce a large spot ("ion burn") by killing the fluorescent property of the central area. The ions can be deflected in the gun by application of an electric field and the normal direction of the electron beam subsequently restored, but the trouble will probably disappear with the general adoption of aluminium backed screens. At present ion traps are rarely fitted. An example of an external magnet assembly is shown in Fig. 3.2E.

3.8. Optical Systems for Projection Tubes. The bulkiness of the directly-viewed type of tube and the consequent restriction it places on the size of the reproduced picture has led to the development of comparatively small tubes capable of producing sufficiently bright pictures to allow satisfactory projection on to a separate screen with enlargement to sizes considerably greater than those obtainable by the other method.

Of the two types of optical device available for producing a magnified image of an object, viz. the lens and the curved mirror, the latter is by far the more satisfactory and is used exclusively in present systems. In the case of the lens all the important optical defects such as spherical aberration, coma, astigmatism, etc., are, except for the first-named, proportional to distance from the common axis of the spherical surfaces forming the system. The spherical mirror, on the other hand, in having a single surface, suffers only from aberration and would, but for this defect, be ideal. Moreover, it is free from chromatic aberration, since it is based on the laws of reflection (as distinct from those of refraction) which are independent of light wavelength (i.e. of colour).

The result of directing a beam of large cross-section parallel

to a radius on to the *inner* side of a spherical reflecting surface (i.e. a *concave* spherical mirror) is shown in Fig. 3.8A. Each ray is deflected at the mirror surface according to the law that

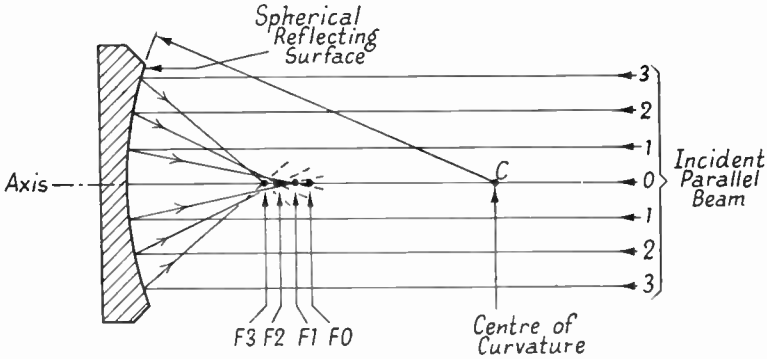

FIG. 3.8A. THE FOCUSING ACTION OF THE SPHERICAL MIRROR
As the distance of the ray from the axis increases so its focal point moves away from the mirror focus F_0 (spherical aberration).

the angle between the reflected ray and the tangential surface through the point of incidence is equal to that between the incident ray and the same surface. If the reflected ray paths are drawn carefully it will be found that they do not all cross

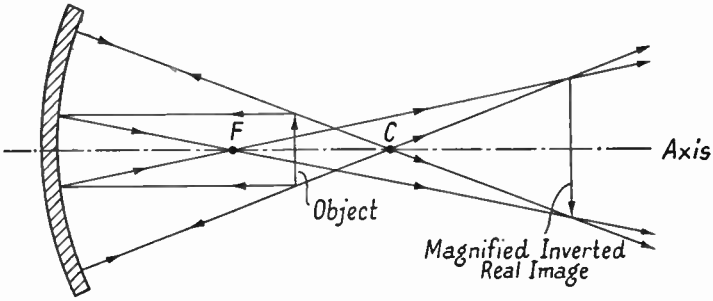

FIG. 3.8B. IMAGE FORMATION IN A SPHERICAL MIRROR
Object between focus (F) and centre of curvature (C).

the axis (i.e. the line coincident with the radius to which the incident beam is parallel) at the same point but at a point which is farther from the mirror the closer the incident ray to the axis. This defect means that such a mirror will focus sharply only a narrow pencil of rays, such as would be received

from a relatively small object located on (or very near to) its axis; such rays are said to be "par-axial."

The method of forming an image of such an object is shown in Fig. 3.8B. Rays travelling parallel to the axis are reflected back through a point called the focus which occurs half-way between the mirror surface and its centre of curvature. Rays following a radial path will meet the mirror surface normally (i.e. perpendicularly) and will travel back along the same path and go through the centre of curvature. These two special cases enable the position and size of the image to be located uniquely, as shown in the figure. The other two cases should be drawn to check the manner in which the relative sizes of image and object change with the distance between the object and the mirror. There is a simple relationship between the various dimensions, namely—

$$\frac{\text{Size of image}}{\text{Size of object}} = \frac{\text{Distance of image from mirror centre}}{\text{Distance of object from mirror centre}}$$

$$= \text{magnification}$$

The three possible results for the relationship between object and image may be stated in tabular form (Table V).

TABLE V: RELATIONSHIP BETWEEN OBJECT AND IMAGE —CONCAVE MIRROR

Position of Object	Position of Image	Relative Size of Image	Orientation of Image	Type of Image
Beyond centre of curvature	Between focus and c. of c.	Reduced	Inverted	Real
Between focus and c. of c.	Beyond c. of c.	Enlarged	Inverted	Real
Between mirror and focus	Beyond focus	Enlarged	No change	Virtual

Since in the first case the image is of reduced size, and the third possibility although providing enlargement without inversion is ruled out by difficulties of practical arrangement, the intermediate case is generally used.

So far the object has been assumed to be sufficiently small to allow its rays to be taken as par-axial, but the screen of

even a small projection tube represents an extensive object and some method of eliminating the consequent spherical aberration is required. The solution to this problem was found by a German, Schmidt, in 1930, in the course of development of long-range cameras for astronomical work.[13] The principle is to introduce an additional optical element so shaped that its spherical aberration is equal and opposite to that of the mirror. The element, called an Aspheric Correcting Plate, is shown in Fig. 3.8c. When a widely distributed source of light is being handled the correcting plate must be placed in a position common to all rays, i.e. with its optical centre at the centre of curvature of the mirror; otherwise its position on the axis is immaterial. The correcting plate introduces chromatic aberration, but for moderate apertures this is negligible and where large apertures are required a double-plate achromatic combination may be employed. The curvature of the field caused by an extended object is readily overcome in the case of a cathode-ray tube source since the tube face may be appropriately curved.

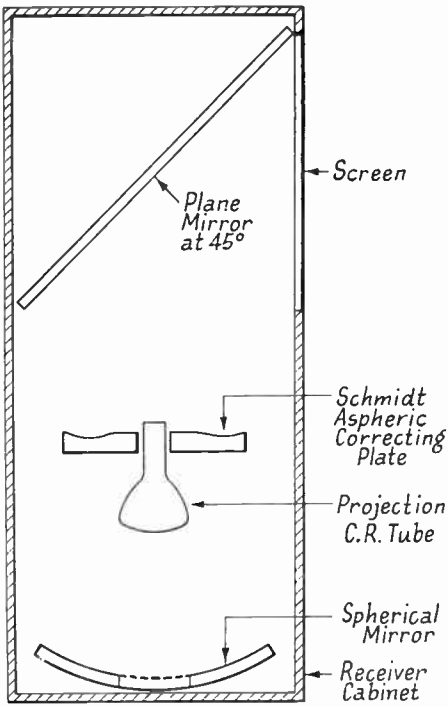

FIG. 3.8c. NORMAL METHOD OF ARRANGING THE SPHERICAL MIRROR, ASPHERIC CORRECTOR, TUBE AND PLANE REFLECTING MIRROR IN A PROJECTION TYPE RECEIVER

While it is quite possible to construct with sufficient accuracy the lens shape required by Schmidt, quantity production, as for home television receiver manufacture, is quite out of the

question when the technique of the lens worker is used. This limitation has been overcome by the development (chiefly by I.C.I. in this country) of lenses made of plastic material and of appropriate manufacturing methods. Suitable substances are refined forms of polymethyl-methacrylate and polystyrene (named "Transpex I" and "Transpex II" respectively by

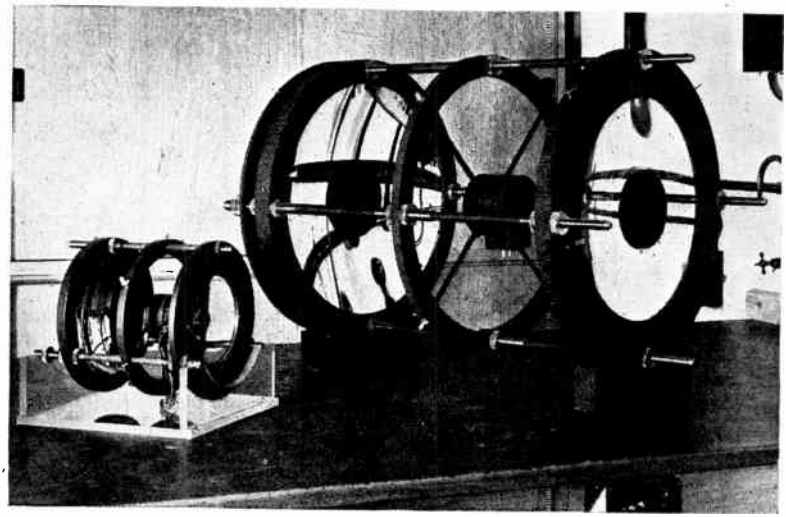

FIG. 3.8D. PROJECTION ASSEMBLIES FOR HOME RECEIVERS (LEFT) AND CINEMA EQUIPMENT (RIGHT)
(Courtesy Dr. D. Starkie, "Endeavour," and I.C.I., Ltd.)

I.C.I.), which materials have been in common use as U.H.F. insulating materials for several years. The principal advantage of these plastics is that they may be compressed between the two halves of a stainless steel mould of the desired shape so that once the master mould has been formed by normal optical methods, lenses of the correct shape may be reproduced in quantity from it.

In applying Schmidt's camera system to the projection of a television picture the positions of object and image are transposed and the resultant arrangement, as used in most current projection receivers, is shown in Fig. 3.8C. The cathode-ray tube is mounted vertically with its face pointing downwards

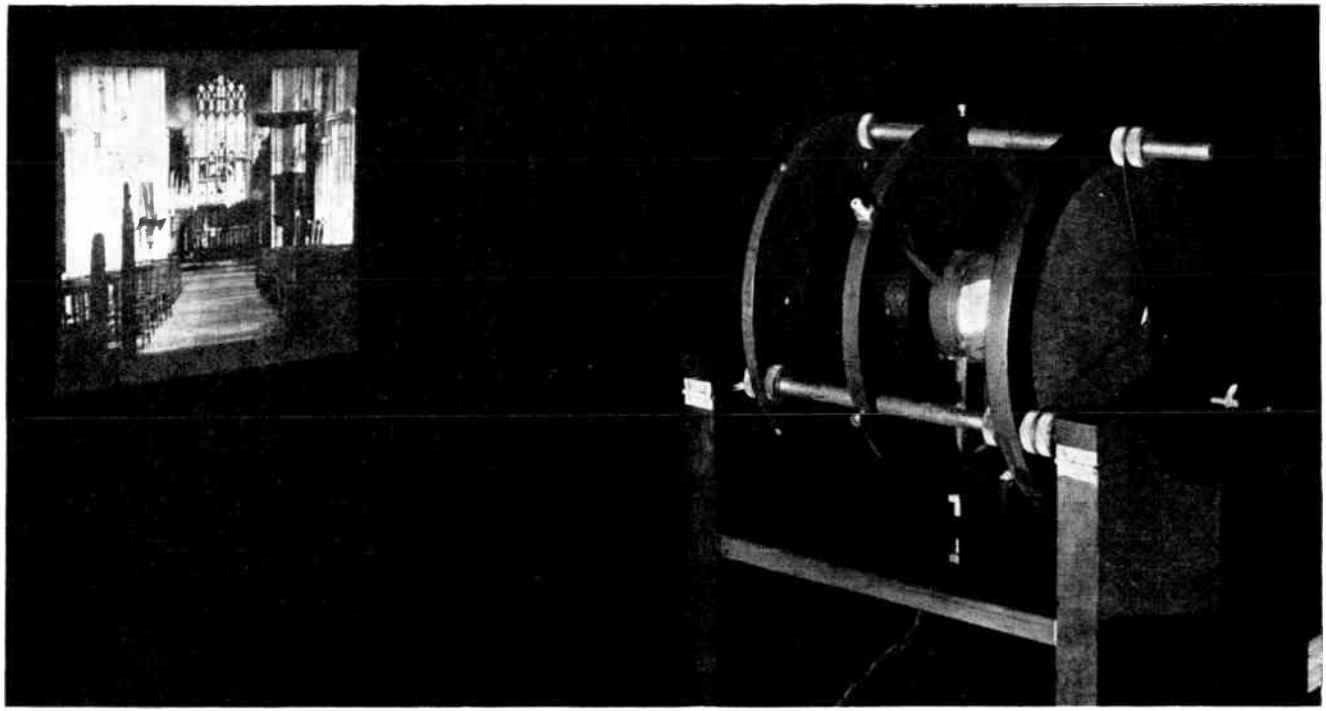

FIG. 3.8E. AN ACTUAL DEMONSTRATION OF THE I.C.I. PROJECTION SYSTEM
(Courtesy of Dr. D. Starkie "Endeavour," and I.C.I., Ltd.)

towards the large spherical mirror mounted horizontally on the floor of the receiver cabinet. The portion of the mirror immediately opposite the tube screen is blacked or blanked out so that no light is reflected back to the C.R.T. screen and all the light collected from the latter is thrown back past it

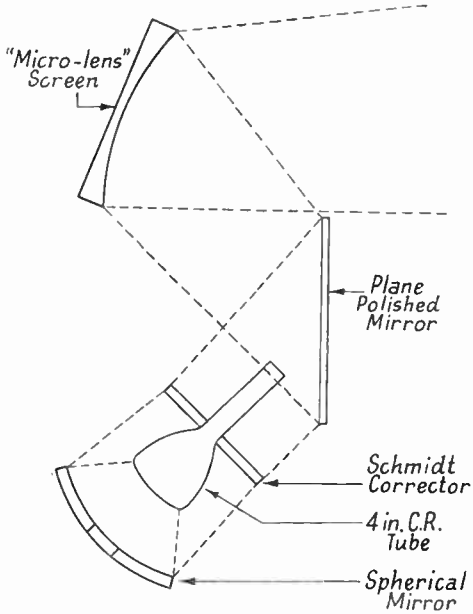

FIG. 3.8F. THE PHILCO "MICRO-LENS" ARRANGEMENT
(*Courtesy of Philco Corp., Ltd.*)

and travels through the aspheric correcting plate arranged concentrically with the tube towards the top of the cabinet where a large rectangular plane mirror, arranged at an angle of 45° to the axis of the optical system, turns the light through 90° and throws it on to a translucent screen. In a slightly different arrangement used by Philco the plane reflecting mirror is mounted vertically in the centre of the front of the cabinet and the tube, spherical mirror and correcting plate are arranged with their common axis inclined at 45° to the vertical (see Figs. 3.8D, 3.8E, 3.8F, and 3.8G).

The screen on which the picture is viewed is at present

subject to intensive research. Apart from the need for maximum light transmission efficiency it is possible by suitable design to reduce the effects of spurious light on the picture and to secure optimum distribution of the transmitted light. In the most advanced design (developed by I.C.I. in Britain)

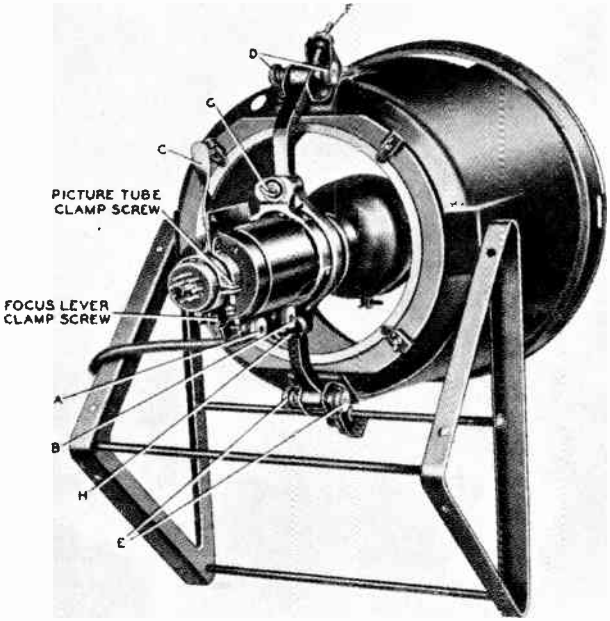

FIG. 3.8G. A PROJECTION TUBE MOUNTING
(Courtesy of Philco Corp., Ltd.)

so far described the face of the screen is formed into a mosaic (100 to 1 in.) of horizontal cylindrical lenses and the other surface into a similar mosaic of vertical cylindrical lenses. By this method the bulk of the transmitted light is contained within an angle of 90° in the horizontal plane and of only 30° in the vertical direction. The directivity thus obtained is effective only for the desired transmitted light; any spurious light is scattered over a wide angle and is consequently relatively less troublesome. A similar screen (the "Microlens") is used by the Philco Corporation.

3.9. Electrical Characteristics and Operating Conditions. The principal electrical characteristics of the picture tube are its anode-cathode p.d., the corresponding focusing field, its deflection sensitivity, maximum beam current, cut-off bias (corresponding to anode-cathode p.d.), heater voltage, and heater current.

The requirements of the picture tube in voltage and current are—

(i) An a.c. supply for the heater.

(ii) H.T. voltage supply of the order 5–10 kV for large directly viewed tubes or 20–30 kV for projection types.

(iii) A controllable negative grid bias voltage ("brightness control") of the order of 50 V max.

(iv) An adjustable focusing system current up to 100 mA when purely electromagnetic focusing is employed, or a much smaller value when the focusing field is almost entirely by a permanent magnet.

The picture signal may be applied to the cathode-ray tube by direct connection from the anode of the final video-frequency amplifier, in which case the tube cathode is usually returned to a higher mean potential derived from a potentiometer connected across the receiver H.T. supply. Where capacitor-resistor coupling to the tube grid is preferred a d.c. restorer must be connected in the appropriate direction across the resistor. In any case, the cathode end of the tube is always electrically near to earth potential and the anode correspondingly positive, as distinct from the oscilloscope case where the opposite applies. The normal component of the grid-cathode p.d., as fixed by the brightness control, is such that when the signal is applied it must rise to 30 per cent of its maximum before the beam current begins to flow, in the British case, or must rise to 75 per cent to cut the beam off in the U.S. case. Thus with no signal the beam will be cut off or at peak brightness, respectively (see Fig. 3.3B). Since the signal is d.c. coupled (or effectively so) and has a d.c. component the mean anode current and therefore the drain on the anode voltage supply will fluctuate with the picture content.

3.10. Generation of the High Accelerating Voltage (E.H.T.).*

The heater current, focusing current, and grid bias for the tube are obtained from the common power supply of the receiver, time-base, and synchronizing circuits. This supply is conventional and involves transformation, rectification, smoothing, etc., of the normal mains supply (actual circuits will be given in Chapter VIII). The high voltage needed for beam acceleration, however, requires a separate circuit and may be generated by different methods.

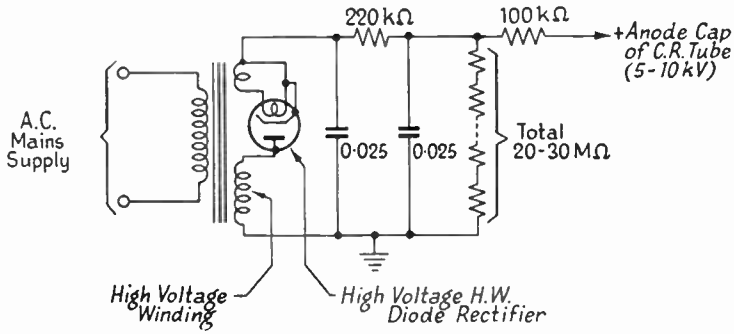

FIG. 3.10A. TYPICAL MAINS-OPERATED E.H.T. SUPPLY

USE OF A.C. MAINS. Stepping up the mains voltage and rectifying in the normal manner, while feasible and still the most used method in television receivers, suffers from two disadvantages, namely, the need, because of the low frequency of the mains supply, for high-voltage capacitors of large value for adequate smoothing and the high cost and large size of an adequately insulated power transformer of the normal type, both of which could be eliminated by the use of a much higher a.c. supply frequency. While such a supply is not available from supply mains the low power level at which the high voltage is required makes it readily obtainable from a single-valve oscillator. Alternatively a suitable pulse voltage and source of sufficient power is already available in the output stage of the line scanning circuit.

A typical mains-operated voltage supply for a tube requiring 5–10 kV is shown in Fig. 3.10A. If the reservoir capacitor is

* E.H.T. = Extra High Tension.

made sufficiently large (say 0·1 μF) additional smoothing may not be necessary but the low current drain permits the use of a high-value smoothing resistor (200 kΩ) and two considerably smaller capacitors (0·025 μF), one as a reservoir and the other for filtering. The output of the high-voltage supply is frequently superimposed on the normal H.T. supply to obtain a slightly higher output. When considerably greater outputs are required some form of voltage multiplication is necessary; this technique will be discussed in a later paragraph.[16, 17, 18]

R.F. Oscillator Method. The radio-frequency type of E.H.T. supply uses a beam power tetrode in a conventional oscillator circuit. The oscillatory voltage developed across the tuned anode circuit is stepped up to a considerably higher value over the separate secondary, which feeds the rectifier and smoothing circuits. For reasons of stability the feedback coil should be coupled to the secondary winding rather than to the primary, and, for good efficiency, the degree of feedback should be sufficient to develop enough negative bias across the grid capacitor-resistor circuit to make the valve operate under class C conditions (i.e. with a bias considerably greater than that at which anode current ceases, so that current flows only during positive peaks of the maintaining voltage—this technique is sometimes called "flick-impulsing"). The optimum oscillation frequency is in the region of the natural resonance of the secondary coil and the sum of the various capacitors in parallel with it; this frequency is usually in the range 50–150 kc/s. Maximum voltage output occurs with the primary tuned to this frequency and with critical coupling (see Chapter VI) between primary and secondary windings. Greater stability with load variation is achieved by considerable overcoupling and with the primary circuit tuned to the lower peak of the resultant double-humped curve. A feature of this arrangement is the possibility of varying the output by changing the primary circuit tuning; when this facility is desired the anode circuit should be parallel fed through an R.F. choke-capacitor filter to allow the variable capacitor moving plates to be

earthed. The diode rectifier may have its cathode heated by R.F. drawn from a separate winding on the H.V. transformer and special diodes have been manufactured to allow this convenience to be used efficiently. The complete power supply must be thoroughly screened and when voltages in excess of 10 kV are generated appropriate design of the lay-out and shape of the circuit and components is necessary to avoid spark-over and corona effects. The low inherent regulation

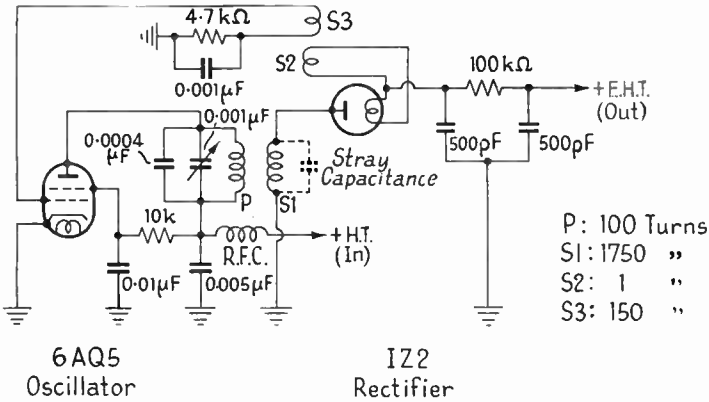

FIG. 3.10B. A TYPICAL R.F. OSCILLATOR-DRIVEN E.H.T. SUPPLY
(*Courtesy of the "R.C.A. Review"*)

and limited power availability of this type of supply is an advantage from the safety point of view. A simple practical circuit is given in Fig. 3.10B.[19, 20]

PULSE METHOD. It is more likely that the pulse-operated type of E.H.T. generator will find favour with television receiver designers because it makes use of oscillations generated spuriously in the line time base and needs no separate R.F. oscillator. It is, in fact, already used in a number of commercial designs. A feature of this arrangement is that line scan failure automatically removes the C.R.T. accelerating potential and thereby protects the tube screen. Two important disadvantages must be noted; one is the interdependence of output voltage and line time-base controls (e.g. amplitude) and the other is that design of the output transformer is made considerably

more difficult. A typical circuit is shown in Fig. 3.10c. The time-base output valve is driven at its grid by a sawtooth wave of line frequency and the corresponding anode current variation is stepped up by the transformer and fed to the

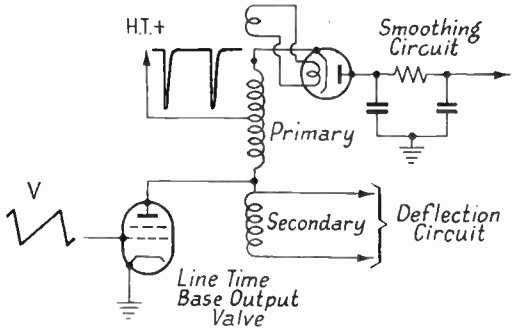

FIG. 3.10c. METHOD OF USING FLYBACK-PULSE VOLTAGE INDUCED IN LINE TIME-BASE OUTPUT TO PRODUCE E.H.T.

deflector inductors. Each time the anode current is suddenly reduced to cause the spot "flyback," a large amplitude (several kilovolts) positive pulse occurs at the anode. The resultant pulse wave is fed to the rectifier circuit directly from the anode. Alternatively a step-up autotransformer may be formed by tapping the anode into the primary winding. The voltage-doubler arrangement shown will be discussed in the next

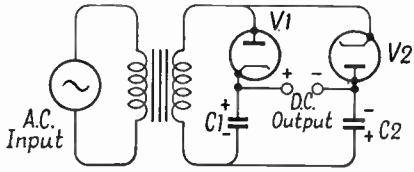

FIG. 3.10D. THE GREINACHER, OR FULL-WAVE, VOLTAGE-DOUBLING RECTIFIER CIRCUIT

section. This method of deriving E.H.T. does not appreciably load the deflection circuit; in fact, it makes use of a portion of the power dissipated at the end of each sweep, which would otherwise be wasted.[21, 22]

VOLTAGE MULTIPLICATION. Voltage-multiplying rectifier circuits are equally applicable to each of the three basic types

of E.H.T. supply just described and are necessary when voltages above about 10 kV are required. Very roughly, one stage of multiplication per 10 kV is required—thus projection tubes operating in the region of 20–30 kV usually employ a voltage "tripler."

In the voltage-doubler arrangement, due to Greinacher, which is shown in Fig. 3.10D, a common a.c. winding is used

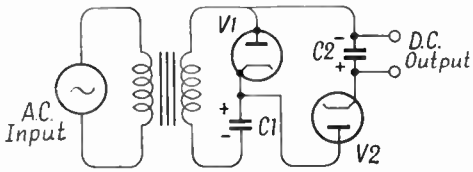

FIG. 3.10E. THE CASCADE, OR HALF-WAVE, VOLTAGE-DOUBLING RECTIFIER CIRCUIT

to feed two half-wave (H.W.) rectifier circuits in parallel and the respective diodes (V_1, V_2) are connected in opposite polarity. On the half-cycles which make the top of the transformer positive with respect to its lower end V_1 conducts, while V_2 passes current on the alternate half-cycles. Consequently the two capacitors are charged alternately and in such directions that

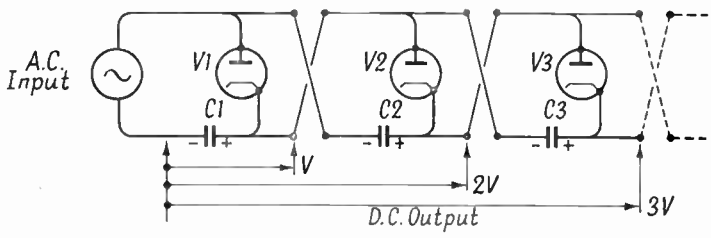

FIG. 3.10F. THE HALF-WAVE CASCADE MULTIPLIER

if the output terminals are taken across both, the output voltage for moderate loads is double that obtainable from a single rectifier fed from a similar a.c. source. The half-wave version of this arrangement is shown in Fig. 3.10E; it is often called the "cascade doubler." During the half-cycles of the input a.c. voltage which make V_1 conduct, C_1 charges to (nearly) the peak value of the input. During the alternate

half-cycles, i.e. when V_1 is non-conductive, the voltage developed across C_1 adds to the input and C_2 charges to nearly twice the peak input voltage. The method of extending this circuit to achieve further multiplication will be apparent from Fig. 3.10F. When the rectifier input is in the form of a pulse wave, and is therefore substantially unidirectional, the type of multiplier shown in Fig. 3.10G is often employed; it differs from the preceding arrangement in having a large resistor,

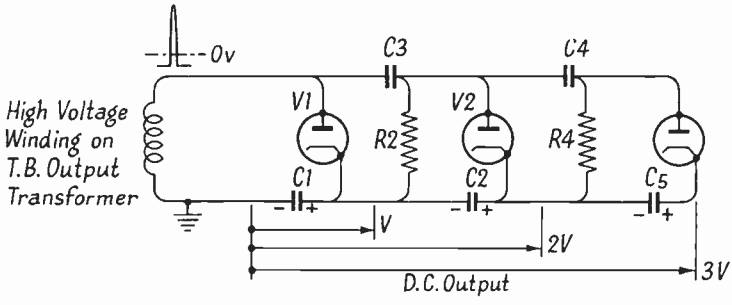

FIG. 3.10G. THE *RC*-COUPLED HALF-WAVE CASCADE MULTIPLIER

through which the associated capacitor charges, in place of each alternate diode. The arrangement shown is a tripler. Each positive input pulse charges C_1 through V_1 and during the same periods V_1 completes the circuit by which C_2 charges, via V_2, from C_3. The latter has its charge maintained during the intervals between pulses by current flow from C_1 through R_2 on the positive side and the pulse source on the negative side; succeeding sections operate in a similar manner.[22, 23, 24]

BIBLIOGRAPHY

(1) COSLETT, V. E. *Introduction to Electron Optics.* Oxford University Press (1946).
(2) MYERS, L. M. *Television Optics.* Pitman (1936).
(3) MALOFF, I. G., and EPSTEIN, D. W. *Electron Optics in Television.* McGraw-Hill (1938).
(4) WOOD, H. Magnetic Focusing. *W.W.* 2nd April (1937) 320.
(5) ——. Magnetic Focusing. *W.W.* 7th July (1938) 15.
(6) RAWCLIFFE, R., and DRESSEL, R. W. Magnetic Focusing and Deflection. *E.I.* Oct. (1946) 120.

(7) COCKING, W. T. Electromagnetic Deflection in Television. *W.W.* 22nd Sept. (1938) 264.
(8) RIDGEWAY, D. V. Line Deflectors. *W.W.* 15th June (1939) 550.
(9) SPOONER, A. M., and SHELTON, E. E. Line Scanning Systems for Television. *E.E.* Oct. (1946) 302.
(10) COCKING, W. T. Deflector Coil Efficiency. *W.W.* Dec. (1947) 460.
(11) LEVY, L., and WEST, D. W. Luminescence and its Application to Television. *J.T.S.* Mar. (1938) 337.
(12) LEVERENZ, H. W. Cathodoluminescence as Applied in Television. *R.R.* Oct. (1940).
(13) COX, A. *Photographic Optics.* Focal Press.
(14) MALOFF, I. G., and EPSTEIN, D. W. Reflective Optics in Projection Television. *Television*, Vol. IV. R.C.A. 250.
(15) STARKIE, D. Plastic Optical Materials. *End.* July (1947) 119.
(16) SCROGGIE, H. G. Danger-high Voltage. *W.W.* 3rd Aug. (1939) 99.
(17) PARTRIDGE, N. H.T. Transformer Construction. *W.W.* 24th Aug. (1939) 168.
(18) ——. Metal Rectifiers for Television. *T.S.S.W.* Apr. (1939) 204.
(19) SCHADE, O. H. Radio-frequency Operated High-voltage Supplies for C.R. Tubes. *P.I.R.E.* Apr. (1943) 158.
(20) MAUTNER, R. S., and SCHADE, O. H. Television High Voltage R.F. Supplies. *R.R.* Mar. (1947) 43.
(21) COCKING, W. T. Television E.H.T. Supply. *W.W.* Jan. (1947) 207.
(22) MALOFF, I. G. Pulsed Rectifiers for Television Receivers. *E.* Aug. (1947) 110.
(23) WAIDELICH, D. L. Voltage Multiplier Circuits. *E.* May (1941) 28.
(24) WAIDELICH, D. L., and SHACKELFORD, C. L. Characteristics of Voltage Multiplying Rectifiers. *P.I.R.E.* Aug. (1944) 470.

CHAPTER IV

THE SCANNING CIRCUITS (TIME BASES)

4.1. Basic Requirements and Block Schematics. It will be recalled that when current passes through one of the C.R.T. deflector systems a magnetic field is set up across the tube neck and the electron beam is deflected proportionally to the field strength. In order to deflect the screen spot at constant velocity this current must be made to increase at a constant rate, i.e. linearly, so that for a recurrent sweep and rapid

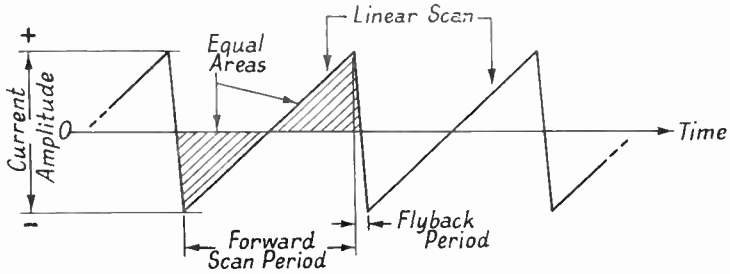

FIG. 4.1A. REQUIRED WAVEFORM OF THE SCANNING INDUCTOR CURRENT

retraces the current waveform will have to be of the form shown in Fig. 4.1A. While this "sawtooth" wave should have a linear rise, its decay need not be exactly linear and is usually exponential,* or the initial part of an exponentially damped oscillation. It has been shown (Chapter I) how, by the combined use of two deflection fields, the spot may be made to cover systematically a rectangular area on the tube screen. This area, which is called the "raster," must appear centrally on the screen which means that, assuming the undeviated spot position is at the screen centre, no shift is required to centralize the sweeps provided the scanning current is purely alternating and the waveform exactly similar on the positive and negative half-cycles. (Note the position of the zero current level in

* I.e. changing at a rate proportional to its instantaneous magnitude.

Fig. 4.1A.) Accordingly, the inductors must be a.c. coupled, i.e. by a two-winding transformer or a capacitor. In practice, owing to tube imperfections, stray permanent fields, or asymmetry of the scanning currents the raster may not be quite central but in any case the focusing magnet assembly has to be carefully aligned with the tube axis before being fixed, and

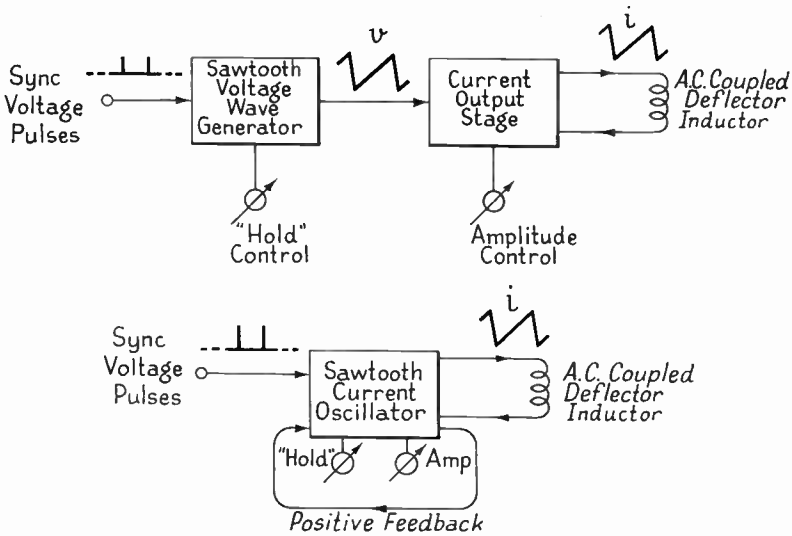

FIG. 4.1B. SCHEMATICS OF THE TWO MOST COMMON TYPES OF TIME BASE

it is convenient to obtain a central raster by slightly tilting the magnet in the appropriate direction when this alignment operation is performed. Sometimes, however, particularly in American receivers, a current controllable in strength and reversible in direction is passed through the inductors for centring.

The deflection currents required, one at line frequency and one at frame frequency, are produced in the scanning circuits, or "time bases," which often employ circuits of the same form but with component values appropriate to the required frequency. In the most satisfactory design two stages are employed in each time base. The first is arranged to produce a fairly linear *voltage* wave of sufficient amplitude to drive a power output type valve (usually a beam tetrode) having the

deflector inductor a.c. coupled to its anode circuit. The sawtooth generator is locked to the synchronizing pulses contained in the received signal to ensure that the scans produced are automatically correct in frequency and phase. The generator is usually brought into synchronism manually by a preset panel control called "Vertical (or "Frame") and Horizontal (or

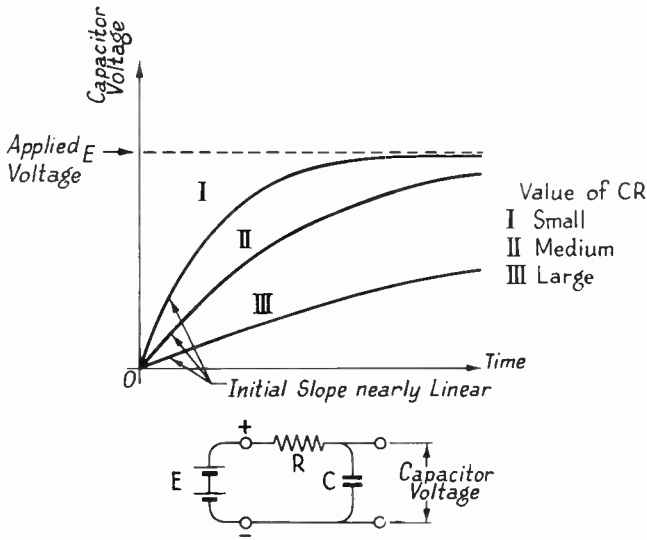

FIG. 4.2A. THE BASIC METHOD OF GENERATING A RISING VOLTAGE

"Line") HOLD." The only other control required, and this is also a panel preset, is of amplitude. See Fig. 4.1B.

Other forms of time base are feasible and are often used in commercial practice; thus the need for economy has led to the development of a satisfactory single-stage circuit in which the output valve is arranged, by using positive feedback, to provide its own drive, various methods being adopted to shape the resultant current to the form required. See Fig. 4.1B.

4.2. The Basic Sawtooth Voltage Wave Generator. When a capacitor is connected in series with a resistor across a source of constant direct voltage (see Fig. 4.2A), the potential difference across its plates (assumed uncharged initially) rises as shown by curve II. It will be noted that the rate at which this voltage

rises (i.e. the "slope" of the curve) falls progressively and eventually becomes zero (i.e. the curve becomes a horizontal line). The wave formed by repetition of such a curve is said to be "exponential" (Chapter II). The rate of increase of the capacitor voltage depends, of course, on the strength of the charging current and this falls as the capacitor p.d. builds up because the latter opposes the applied voltage.

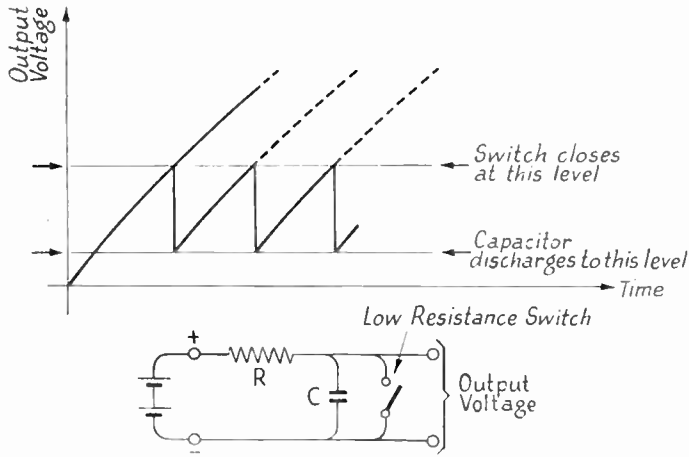

FIG. 4.2B. THE BASIC SAWTOOTH VOLTAGE-WAVE GENERATOR

If either C or R is made larger the charging curve becomes flatter, i.e. it is stretched toward the right along the time axis, (III), while a reduction of C or R enables C to charge more rapidly, (I). The response to the applied voltage thus depends not so much on C or R separately but on their product ($C \times R$), which is called the time constant of the circuit. For example, if C is doubled and R halved, the charging curve remains unchanged. Again, if R is multiplied by four, and C divided by $\frac{1}{4}$, the overall result is the same. A useful approximate rule is that the time (in seconds) required for C to charge to $\frac{2}{3}$ of its final voltage (applied voltage) can be obtained by multiplying C in microfarads by R in megohms; e.g. a 2 MΩ resistor and a 0·1 μF capacitor will take 0·2 sec to charge to 80 V when connected across a 120 V battery.

The importance of the simple circuit just discussed is that

it provides the basis for a linear sawtooth voltage wave generator which is the heart of a time base. Nearly all practical generators are, in fact, developed from this basic arrangement. The latter is generally called an integrator and is very widely used in electronic circuits for smoothing, wave-shaping, pulse discrimination, etc.

If a low-resistance switch is connected across the capacitor of the integrator, and closed, the capacitor p.d. will fall rapidly to a very small value but will build up again when the switch is reopened (see Fig. 4.2B). By closing the switch when the p.d. has reached only 5 to 10 per cent of the applied voltage the p.d. can be restricted to the initial part of the curve which is practically linear. It is only necessary then to close the switch momentarily each time the p.d. reaches a selected point in this part of the curve and a fairly linear recurrent sawtooth voltage will be obtained. In practice, of course, some electronic method of performing the switching action is required; the Thyratron valve described in the next section is ideally suited for this purpose—alternatively one of a variety of hard-valve trigger circuits may be used (§ 4.5).

4.3. The Thyratron Valve: Action and Characteristics. In Britain the most popular sawtooth driver is the Thyratron; it leads to a simple and very satisfactory circuit and is readily controlled and synchronized. The Thyratron valve is most easily understood by comparison with the ordinary hard three-electrode valve. In structure there are no fundamental differences, the small type being essentially a triode operating in a low-pressure gas instead of *in vacuo*. In the normal hard triode the anode current increases progressively, as the grid voltage is raised above its cut-off value, until the entire space charge is drawn away from the cathode; the anode current is then said to have reached "saturation." Between these limits (i.e. anode current cut-off and saturation) the portion of the cathode emission which remains in the grid-cathode region exerts a braking effect on the flow of anode current, which is said to be space-charge limited. In the Thyratron, however, as soon as the electrons forming the anode current acquire

appreciable velocity (and this occurs for a grid-cathode p.d. very little above what would, for a hard valve, be the cut-off value) the gas molecules in their path become ionized, i.e. electrons are detached by collision from the molecules, leaving the latter positively charged. The electrons so released move under the attractive influence of the anode, along with the primary electron stream, and assist the ionizing action of the latter. The positively charged ions, on the other hand, search for the most negative point, i.e. the grid, and rapidly collect

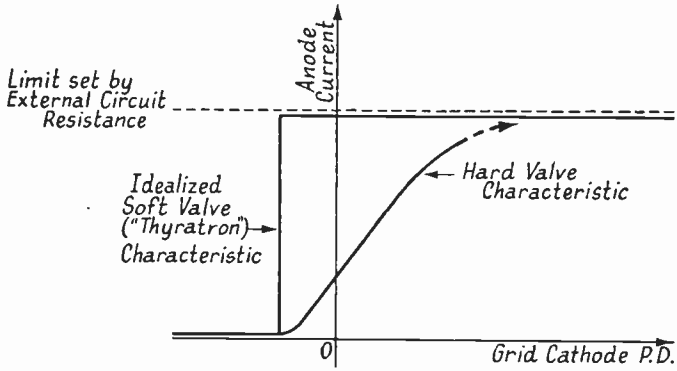

FIG. 4.3A. COMPARISON OF CHARACTERISTICS OF HARD AND SOFT TRIODES

around it, thus neutralizing its negative potential and allowing heavy anode current to flow. A further point is that the positive ions in the grid cathode region tend to cancel the space charge and, therefore, to eliminate the retarding effect which occurs in the hard triode. The overall effect is that the ionization process, being cumulative, allows the anode current to shoot up to a maximum set only by the resistance of the external circuit and the driving voltage in the anode circuit (see Fig. 4.3A). What was a gradual grid-controlled transition from zero to maximum current becomes a sudden jump with the grid powerless to exert control. Once the thyratron has "fired," or "struck," in this manner, the discharge between anode and cathode can be stopped only by reducing the anode-cathode voltage to such a low value (+ 15 to + 40 V, depending largely on the kind of gas used) that it is unable to maintain

the discharge. It is necessary in practice to ensure that there is sufficient anode circuit resistance to keep the peak value of the current within a safe rating, e.g. 500 mA, specified by the manufacturers. In the same way the positive ions, in neutralizing the grid bias, and rendering it powerless to control the discharge, draw considerable grid current which must be limited by keeping the grid-cathode circuit resistance above about 25 kΩ.

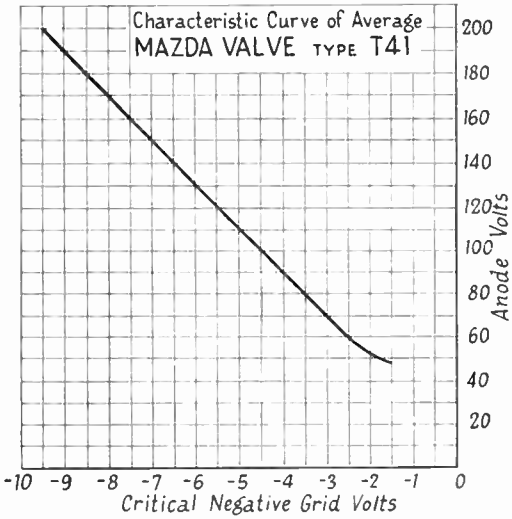

FIG. 4.3B. A TYPICAL THYRATRON GRID CONTROL CHARACTERISTIC
(Courtesy of Edison Swan Electric Co., Ltd.)

The effect of the grid voltage is to determine the critical anode potential at which the discharge commences. Expressed alternatively, for a given anode potential the grid must be raised above a critical level to initiate the discharge. The ratio between any particular value of anode to cathode potential and the corresponding critical grid-cathode potential, ignoring the difference in signs, is called the "grid control ratio." Thus, if the critical grid voltage is -10 V for an anode voltage of 200 V, the grid control ratio is $\frac{200}{10} = 20$. This ratio remains practically constant over a wide range of operating conditions since it depends very largely on the gas used—ratios of 20 for mercury vapour and (nearly) 30 for argon are usual (see

Fig. 4.3B). The voltage drop across the Thyratron during the discharge is also a constant, again dependent chiefly on the kind and state of the gas, and is approximately the minimum voltage required to maintain the discharge; in fact, the discharge current rises to the point where the external voltage drop, when subtracted from the total driving voltage in the

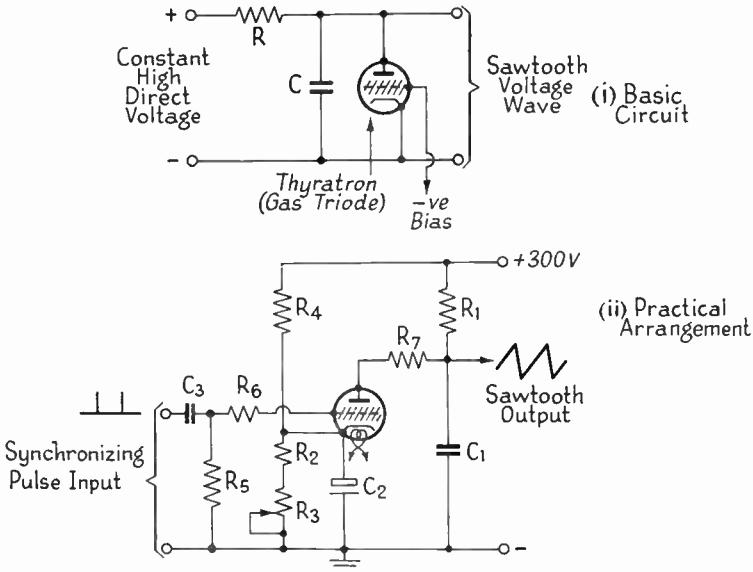

FIG. 4.4A. THE THYRATRON TIME-BASE (SAWTOOTH VOLTAGE WAVE) GENERATOR

circuit (the H.T. voltage), leaves a residual voltage just sufficient to maintain the discharge.[1]

4.4. The Thyratron Sawtooth Generator. The basic Thyratron sawtooth voltage-wave generator is shown in Fig. 4.4A. An H.T. supply of say 300 V is connected across the series *CR* circuit and the Thyratron directly across *C* with its anode toward the positive end of the circuit. If the grid bias of the Thyratron is made − 3 V, and the Thyratron has a grid-control ratio of 20, it will strike when the anode reaches + 60 V (all voltages relative to the cathode). Thus when the circuit is first "made," the voltage across *C*, starting at zero, rises in the manner shown in Fig. 4.2A. When the anode-to-cathode

p.d. reaches + 60 V the Thyratron strikes and discharges C very rapidly to the point where the anode-cathode p.d. just fails to maintain the discharge (say + 20 V). The discharge then ceases and C recharges in the usual manner towards + 60 V again. This cycle of operations repeats automatically and an approximately linear voltage wave is produced across C. The amplitude of this wave depends on the Thyratron grid voltage and increases as the latter is made more negative. The time taken for C to charge from the minimum to maximum voltage levels (as set by the Thyratron) depends on—

(i) The value of the applied voltage (E),
(ii) The values of C and R,
(iii) The differences between the striking and extinction voltages of the Thyratron (i.e. on the wave amplitude).

If E is increased, or either C or R reduced, or the amplitude reduced, the *time* occupied by one sawtooth *decreases*; in other words, the number of cycles per second (the *frequency*) *increases* —and vice versa.

A complete practical Thyratron circuit is shown at (ii) in Fig. 4.4A.

The generator uses R_1 and C_1 in the charging circuit. The grid bias for the Thyratron is developed across the cathode resistors R_2, R_3 and variation due to the pulsating Thyratron current is eliminated by the smoothing capacitor C_2 (a large-capacitance electrolytic). Improved stability is provided by the d.c. bleed from the H.T. line to the cathode via R_4. The synchronizing pulses are applied to the Thyratron grid circuit through the CR coupling C_3, R_5; C_3 is necessary to block the d.c. potential in the preceding valve circuit while R_5 is necessary to complete the d.c. path between Thyratron grid and cathode while presenting sufficient impedance to the injected signal. The values of C_3, R_5 are made small enough to cause "peaking" of the approximately square synchronizing pulses; this peaking action, or differentiation, was described in Chapter II. The grid stopper R_6 increases the total grid-cathode resistance to bring it into the optimum region for most stable operation

(30 kΩ—50 kΩ), and it acts as a noise filter together with the input capacitance of the valve, without seriously marring the shape of the synchronizing pulses. The small anode resistor R_7 keeps the peak discharge current flowing round the loop C_2, Thyratron, R_7, C_1, C_2 within the specified safe maximum.

This same circuit is suitable for both time bases; the appropriate component values will be given in typical circuits in Chapter VIII.

4.5. Hard Valve Discharge Circuits. The basic method of adapting a hard valve to the capacitor discharge problem set

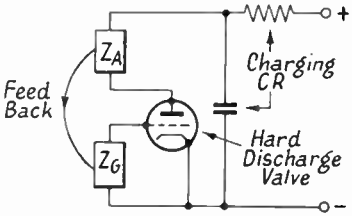

FIG. 4.5A. GENERAL FORM OF THE HARD-VALVE SAWTOOTH GENERATOR

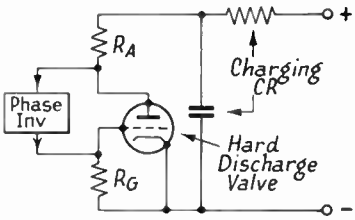

FIG. 4.5B. PARTICULAR FORM OF THE HARD-VALVE SAWTOOTH GENERATOR WHICH IS THE BASIS OF SEVERAL PRACTICAL CIRCUITS

by the sawtooth generator is shown in Fig. 4.5A. The valve is connected across the capacitor, but through a small impedance z_A, and is biased off to prevent anode current from flowing while the p.d. across C of the basic charging circuit rises to the level corresponding to the amplitude required. When the capacitor p.d. reaches this level the grid bias is insufficient to hold off the anode current, and the latter in passing through z_A, causes a voltage change which is passed back to the grid-cathode circuit, and applied (after appropriate shift) as a positive change to the grid, thus making the anode current increase further. Clearly, this process is cumulative and the anode current rises very rapidly, particularly if a large voltage change is fed back, after inversion, to the grid, and if the valve mutual conductance is high and z_A is low. If z_A, z_G are both resistive the voltage change occurring at the anode when current flow commences must be inverted before being applied to the grid so that the feedback circuit must include a phase inverter (see Fig. 4.5B).

Suitable inverters are a transformer, or a valve, the former leading to the blocking-oscillator circuit and the latter to the multivibrator, both of which are frequently used as sawtooth generators in television time bases.

The blocking oscillator usually employs a tetrode or pentode and the multivibrator a double-triode. When a pentode is available, however, it is possible to obtain a similar result without the use of an external inverter. For if the anode current is held off by biasing the suppressor grid negatively and the control-grid bias raised sufficiently to allow screen current to flow, the incidence of anode current causes a decrease in screen current. The resultant positive change occurring at the screen may be used to pull up the suppressor grid and cause a cumulative anode current rise. This arrangement provides the "transitron" circuit. In all three arrangements the grid to which feedback is applied is driven sufficiently negative to draw considerable current which is used to charge the coupling capacitor C_1, so that when the discharge has ceased and the pulse feedback has disappeared, the charge left in the capacitor makes the grid very negative and holds off the anode current throughout the next charging period (i.e. throughout the next scan). All three circuits are therefore self-running oscillators of the relaxation type and may generate narrow but large amplitude pulses of current separated by comparatively long periods during which the current is cut off.[1, 2, 3, 4]

4.6. The Blocking-oscillator. The blocking-oscillator type of sawtooth generator is shown in its simplest form in Fig. 4.6A, together with a table of the characteristic wave-shapes. Assume that the grid capacitor has been charged to a high voltage with the polarity as shown and is discharging round the loop completed by the transformer secondary and the grid resistor. The resultant voltage drop across the latter biases the valve off until the grid capacitor p.d. has fallen to such a level that this bias current, and the resultant p.d. it develops, across R_1, are no longer sufficient to "hold off" the valve. Anode current will then commence to flow and cause the anode potential to drop; this voltage change is inverted by appropriate connection

of the transformer secondary and applied through C_1 to the grid in such a direction (i.e. positively) that the anode current is thereby assisted to flow. The latter therefore jumps quickly to a maximum fixed by various factors, but chiefly by the fact that the capacitor is the source of the current and therefore the charge available to be set in motion is limited. Thus the capacitor discharges very quickly and as the discharge nears completion the anode current commences to decrease. The voltage applied to the grid therefore reverses and drives the valve rapidly back into cut-off. Since C_1 is associated with a large (effectively parallel) resistor R_1, the charge supplied to it, and which has built up a large p.d. across it, cannot disappear quickly. Thus the end of the pulse leaves the valve with a large negative bias due to C_1, which bias slowly disappears until eventually the action is repeated. This basic action may be accompanied during the pulse period by spurious oscillation at high frequency due to shock excitation of the resonant circuit(s) formed by the transformer inductances and associated stray capacitances. Practical circuit configurations differ chiefly in the arrangement of the grid CR network. The valve

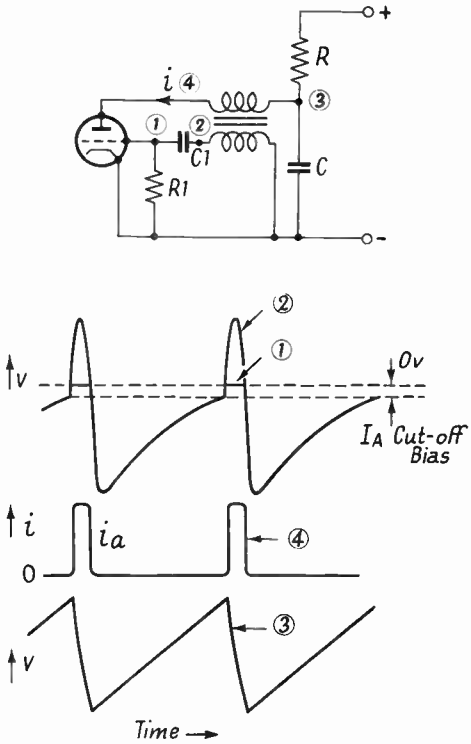

FIG. 4.6A. THE BLOCKING-OSCILLATOR TYPE OF SAWTOOTH GENERATOR AND ITS CHARACTERISTIC WAVEFORMS

comes out of cut-off more sharply if the H.T. supply is brought into the discharge loop by returning R_1 to the H.T. positive

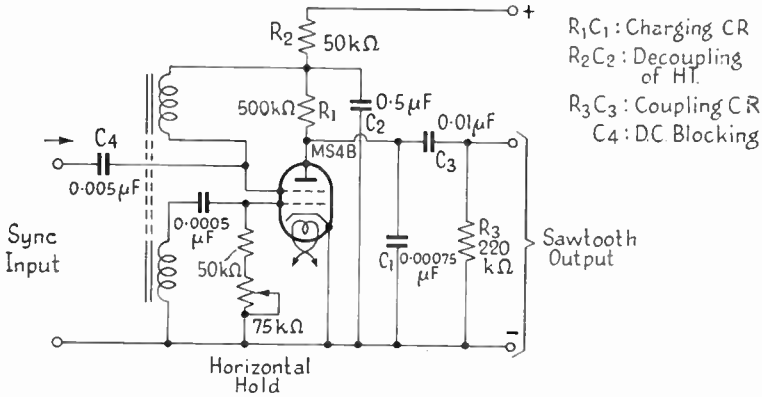

FIG. 4.6B. PRACTICAL BLOCKING-OSCILLATOR TYPE LINE TIME-BASE GENERATOR

(Courtesy of The Gramophone Company, Ltd.)

rail rather than to earth; but a parallel CR in the cathode side of the grid circuit is commonly used. The synchronizing voltage

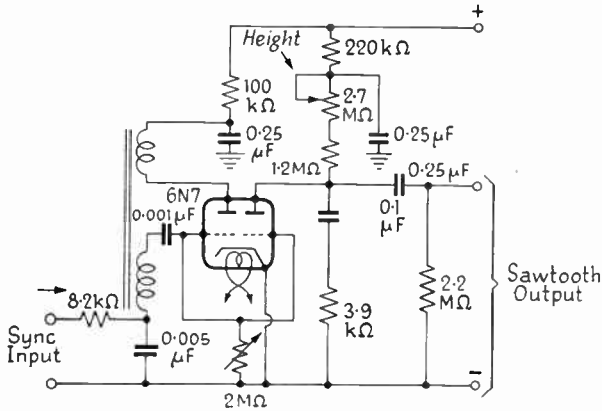

FIG. 4.6C. PRACTICAL BLOCKING-OSCILLATOR TYPE FRAME TIME-BASE GENERATOR

(Courtesy of R.C.A., Ltd.)

is injected in the earthy lead of the transformer secondary or capacitively coupled directly to the grid, and the grid resistor made adjustable to allow exact synchronization to be achieved.

Two typical practical circuits, one British, one American, are given in Figs. 4.6B and 4.6C* respectively.

In both cases the impedance z_A shown in the basic circuit forms of Figs. 4.5A and 4.5B, which assumed a single triode-type discharge valve, is eliminated from the discharge circuit. In the first example the cathode-grid-screen portion of an R.F.-type beam tetrode is employed to "pulse" the anode current, leaving only the CR sawtooth-forming network in the anode circuit; in the other example two triodes in a common envelope are employed, one performing the discharge function, the other acting as the oscillating trigger.[1, 4, 7]

4.7. The Multivibrator. The multivibrator, so called because its output in containing practically vertical edges is rich in harmonics, is often preferred to the blocking oscillator; it needs no phase-reversing transformer and although an extra valve is required the cathode-coupled arrangement provides a very convenient circuit to which the small double triode is well adapted.

The original circuit of the multivibrator is shown in Fig. 4.7A. It is symmetrical in form and may be regarded as a form of push-pull circuit (self-driven), although certain features will be more readily understood if the circuit is considered as a two-stage CR-coupled amplifier providing its own input. If the time constants of the coupling CR's are large and stray reactances may be ignored, the overall gain of the circuit, with one feedback path broken, will be very large; moreover, the overall phase shift will be negligible at all except very low frequencies. Accordingly, with the feedback path connected, the whole circuit is extremely unstable. Thus, if grid 1 is made slightly more positive, anode 1 falls in potential and drives grid 2 more negative, thus causing anode 2 to rise and increase the initial change at grid 1. This action, being cumulative, rapidly draws heavy grid current from grid 1 and drives grid 2 considerably beyond its cut-off potential. While C_{12} is discharging through R_{A1} and R_{G2} to allow valve 2 to return to the conductive state, valve 1 continues to pass heavy anode current. When grid 2

* The 3·9 kΩ resistor develops a negative pulse during each discharge period which is used to cut off the output valve during the flyback pulse at its anode.

eventually rises to cut-off level anode current begins to flow and the potential of anode 2 drops, causing grid 1 to fall, and anode 1 to rise. The latter change causes an acceleration in the rate of rise of grid 2 potential so that it runs quickly to 0, where it is limited by grid current flow. At the same time valve 1 cuts off and its grid is driven very negative. This action requires no hypothetical voltage change at either grid to

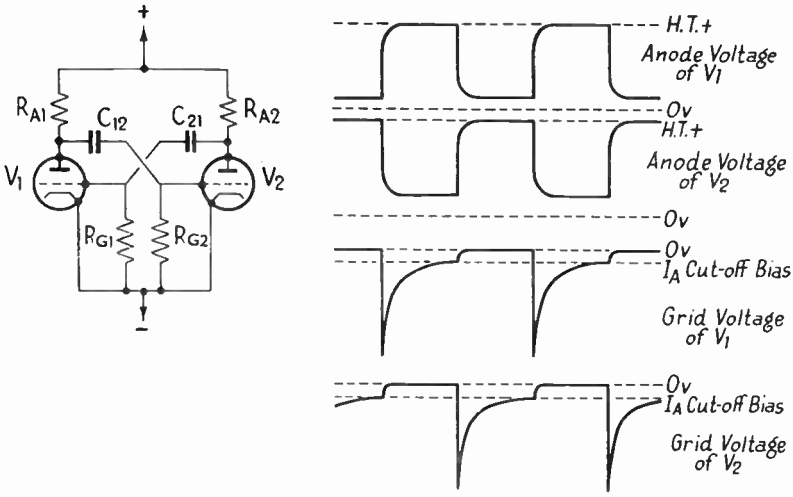

FIG. 4.7A. THE ANODE-COUPLED MULTIVIBRATOR: BASIC CIRCUIT AND WAVEFORMS

initiate it, the mere act of switching on causing oscillation to commence immediately. The waveshapes occurring for the case of similar valves and coupling networks are shown in the figure. The anode waves are good approximations to the square wave when the frequency of oscillation is low but as frequency is increased, by reduction of the values of the components in the coupling networks, the waveshape deteriorates owing to valve inter-electrode capacitances and falling loop gain. The frequency of oscillation is given very roughly by the reciprocal of the sum of the coupling time constants ($1/2CR$ for the symmetrical case). If the two coupling networks differ then, in general, the two portions of the cycle of operations will differ correspondingly in duration. This fact allows the

circuit to be used for television (provided the grid resistors are very much larger than the anode resistors), for if the two coupling *CR*'s are given a ratio equal to that of the sweep to the flyback periods the resultant square-pulse wave only needs shaping to be made suitable for driving a scanning output valve. A good approximation to the desired shape may, in fact, be obtained simply by connecting a capacitor of suitable value between anode and cathode of the valve fed by the coupling

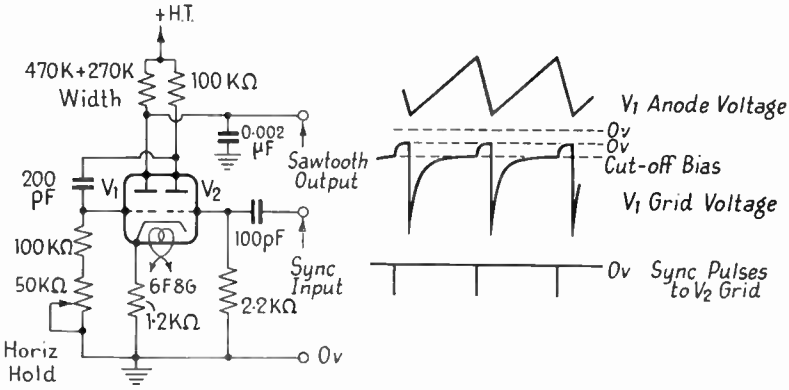

FIG. 4.7B. THE CATHODE-COUPLED MULTIVIBRATOR; A PRACTICAL LINE TIME-BASE CIRCUIT (15·75 KC/S)

of shorter time constant. The cathode-coupled amplifier pair formed by cascading the cathode-follower and cathode-input amplifier are, in virtue of the similarity of input and output phases, suitable for generating a square-pulse waveform. The cathode-input amplifier anode is back coupled to the grid of its driver valve, giving the arrangement of Fig. 4.7B. The synchronizing voltage may be injected by breaking the otherwise grounded grid lead, while the long *CR* required to convert the pulse shape into a sawtooth wave may be connected into the anode circuit of the driver. By comparison with the original multivibrator one anode-to-grid coupling is replaced by the common cathode load. This arrangement, called the cathode-coupled multivibrator, is commonly used in American practice. The example in Fig. 4.7B has component values suitable for the U.S. line frequency (15·75 kc/s).[4, 7]

4.8. The Transitron. Another basic form of sawtooth generator suitable for television scanning circuits is the "transitron," the basic circuit of which is shown at Fig. 4.8A, together with a table of characteristic waveshapes. Its operation arises from the property possessed by the suppressor grid of controlling the partition of the valve space current between anode and screen. For a given control grid potential the space current does not depend to a marked extent upon the anode and screen

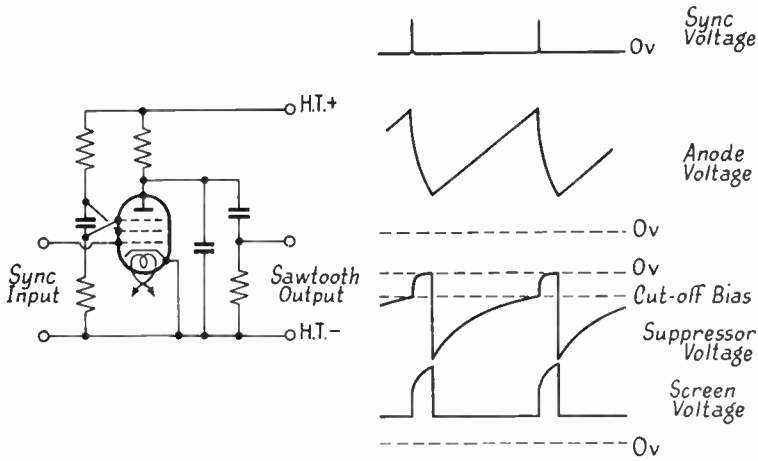

FIG. 4.8A. THE BASIC TRANSITION CIRCUIT AND ITS CHARACTERISTIC WAVEFORMS

potentials. When the suppressor grid is made very negative (i.e. more than about — 50 V for ordinary pentodes, but "short suppressor base" valves were developed for radar work)* the whole of the space current is collected by the screen but as the suppressor bias is reduced anode current starts to flow and the screen current decreases causing the screen potential to rise. By capacitatively coupling the suppressor and screen this action can be made cumulative. The opposite changes of anode and screen potentials with change of suppressor potential are reminiscent of the opposite changes of the two anodes (of a multivibrator) when one of the grids is varied in potential. The action is thus basically similar to that of the multivibrator,

* E.g. Mazda V.872

as is shown by the wave-shapes, and need not therefore be described. The otherwise square anode wave is converted to the required sawtooth in the same way; a capacitor is connected from anode to ground. The control grid, which takes no part in the oscillatory action, is used for synchronization.[8, 9]

4.9. Synchronization of the Sawtooth Generator. The sawtooth generators in television time bases are required to function at only one particular frequency, that of the frame or line pulses contained in the received signal. Accordingly, the discharge circuit is set to provide the sawtooth amplitude needed to drive the output stage, and, for the available H.T. voltage, values of C and R are chosen to make the circuit generate very nearly the frequency required. It will be obvious, however, that the generator cannot be allowed to "free-run," even if its frequency can be set precisely to the required value, since its output must be phased up with the received signal. Moreover, this exact correspondence of frequency and phase between the signal and time bases must hold exactly throughout the whole transmission once synchronism has been established. It will be remembered that the received signal contains synchronizing pulses under the picture modulation. The latter is clipped off in the synchronizing separator and the residual pulse wave shaped up into sharp pulses and applied to a suitable control point in the sawtooth generator circuit—usually the grid. The synchronizing circuits will be examined in detail in the next chapter and for the present a common method of synchronizing the time base will be explained in terms of an idealized form of synchronizing signal, namely, a sequence of very narrow steep-sided positive going pulses. If these are of large amplitude compared with the grid bias they will obviously pull the generator into a rigid lock which will be unaffected by a quite large subsequent variation of the hold control. It is more satisfactory to use a comparatively small amplitude of synchronizing pulse (as will be explained in detail later). In this case the pulses may differ considerably initially in phase from that of the sawtooth generator, but if the frequency of the latter is only slightly different from that of the

synchronizing pulses their relative positions on a time axis change gradually until a synchronizing pulse occurs just before the discharge valve conducts. This pulse will therefore initiate the discharge and, provided the sawtooth generator is running at a frequency a little slower than that of the synchronizing pulses, the latter will initiate all subsequent discharges, i.e. they will thenceforth hold the generator in synchronism. The

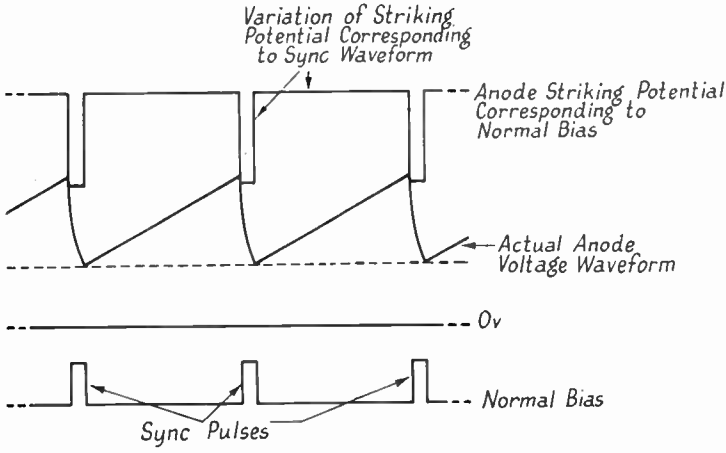

FIG. 4.9A. METHOD OF PULSE-TRIGGERING THE SAWTOOTH GENERATOR

The positive-going grid pulse causes the critical anode potential to fall sufficiently to initiate the discharge (flyback) when the anode voltage has risen to the required level.

foregoing will be understood quite easily if taken with reference to Fig. 4.9A.[1]

4.10. The Output Stage. The setting up of a linear sawtooth current wave in a deflector inductor is complicated by its inherent inductance; during the forward stroke of the line time base the inductance present affects the manner in which the current wave builds up, while the great rate at which the current must be reduced to complete the flyback causes the generation of a considerable back e.m.f.

A practical deflector inductor has enough resistance to warrant regarding it as a combination of inductance and resistance in series. In the line case the high operating frequency makes the inductive component much more important than the resistance;

the frame inductor is largely resistive. The criterion on which inductor performance depends is therefore wL/R rather than L/R. In any case it will be understood from Chapter II that when a current rises linearly in a series LR circuit the total back voltage developed will be the sum of the *constant* voltage across L and the linearly rising p.d. on R; the result is shown at Fig. 4.10A. Expressed alternatively, a pure inductance requires an applied voltage of step form to set up a linearly

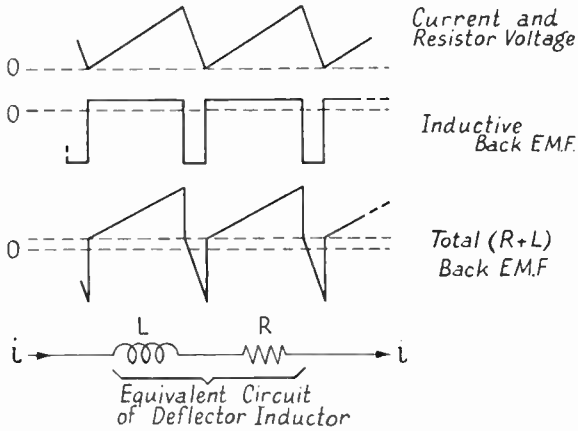

FIG. 4.10A. THE BACK E.M.F. DEVELOPED ACROSS A RESISTIVE DEFLECTOR INDUCTOR PASSING AN IDEAL SAWTOOTH CURRENT WAVE

rising current in it, whereas in the case of resistance alone the applied voltage will need to be similar in form to that of the required current, so that when both resistance and inductance are present the step change of input must be followed by a linear rise. This result suggests two possible methods of operating inductors. The required voltage may be generated in a very-low-impedance output circuit and applied across the inductor, or the required current set up in a circuit of very high output impedance and fed to the inductor. The first method has been used in radar but the need for a cathode-follower-type driver precludes its use in television circuits, at least in the line case, because of the high pulse voltage developed on the flyback, which pulse is more conveniently taken by the anode. In line and frame circuits of the driven type the inductor is

fed from the anode of a high-impedance (usually a beam power tetrode) valve whose anode current is varied by a sawtooth voltage wave applied between grid and cathode. Another possibility will be considered in § 4.12.[20]

The second difficulty raised by the inductance, namely flyback voltage, has already been discussed in connection with scanning inductor design; it will be remembered that while it is possible to use a large number of turns and correspondingly small current for frame deflection the line deflector must have

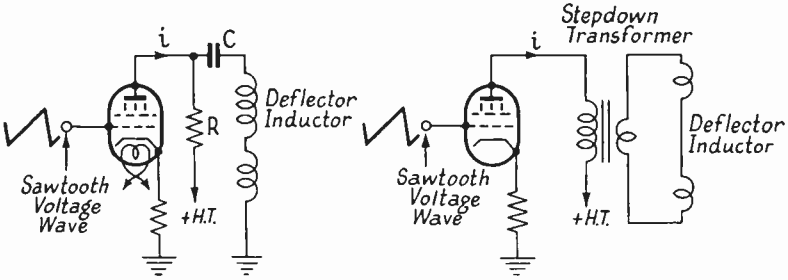

RC Coupled High Impedance Inductor Circuit

Transformer Coupled Low Impedance Inductor Circuit

FIG. 4.10B. BASIC DEFLECTOR INDUCTOR COUPLING CIRCUITS

comparatively few turns and be fed with a large current, thus necessitating a step-down transformer of 5 to 10–1 turns ratio. Transformer drive is often employed in the frame circuit, however, since although the extra component required is more expensive than a coupling capacitor, scanning inductor design is considerably facilitated—thus similar inductors may be used for deflection in both directions. When an output transformer is not employed in the frame circuit the necessity of a.c. coupling, to allow centring of the raster, requires a parallel *LC* or *RC* feed. The latter is commonly used and the low fundamental frequency requires a coupling capacitor (usually electrolytic) of at least 8 μF (see Fig. 4.10B).

There are three satisfactory methods of controlling the amplitude of the current fed to the coils and, therefore, of the resultant scan size. They operate on the output valve since it is undesirable to risk upsetting of synchronization or linearity

by controlling the output of the sawtooth generator feeding it. The best method is a variable cathode resistor arranged to provide a controllable degree of negative feedback to the grid, and thus of its effective input. Alternatively the mutual

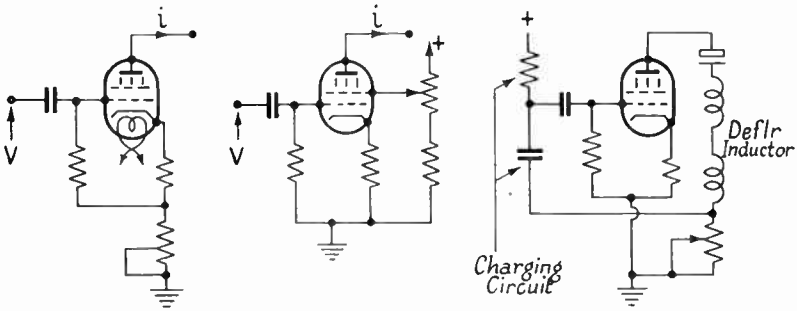

FIG. 4.10C. THREE METHODS OF TIME-BASE AMPLITUDE CONTROL

conductance of the output valve may be varied by feeding the screen from a variable voltage divider across the H.T. supply. Anode circuit controls would considerably influence scan linearity and duration of flyback, but it is possible to arrange a variable negative feedback path between output and input circuits without excessive effects upon other factors than the amplitude (see Fig. 4.10C).

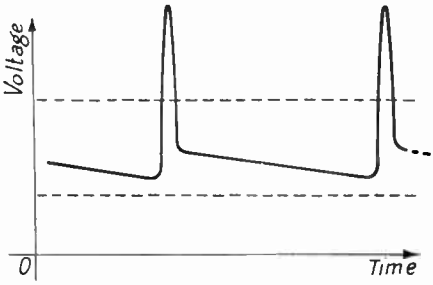

FIG. 4.10D. ANODE VOLTAGE WAVEFORM OF FRAME TIME-BASE OUTPUT VALVE

In the line time-base waveform the pulse amplitude is considerably greater.

It might be expected that the waveshape occurring at the output valve anode in an actual circuit would be of the form shown at Fig. 4.10A, but inverted—for the anode swings positive on the flyback in an effort to maintain the anode current. In the frame case the resemblance is close, as shown at Fig. 4.10D, since the downward slope due to R is pronounced. The flyback pulse is rounded (half-sinusoidal), however, due principally to the presence of capacitance in the circuit. The

coupling capacitor, deflector inductor and anode resistor form a series resonant circuit, and if the resistor is reduced sufficiently the flyback may send this series resonant circuit into a highly damped ring. In the line case, where a feed resistor is not used, there is insufficient resistance in circuit to damp out flyback oscillation and damping must be added; this is usually done by adding resistance in parallel with the primary and/or the secondary of the coupling transformer. The resistances required are of the order 25 kΩ–100 kΩ and 1 kΩ–2 kΩ respectively. Too small a resistor gives excessive damping and no ring occurs, but the flyback voltage has the form of a reduced-amplitude unidirectional pulse and will usually be of excessive length; moreover, the proportion of energy absorbed on the forward sweep seriously reduces the scan length. As damping is reduced the flyback pulse increases in amplitude and decreases in width and with further reduction a pronounced ring is set up. This appears in the raster not only as variation in linearity but also in brightness variation, due to velocity modulation (i.e. the apparent trace brightness varies with spot velocity although the actual beam current remains constant); in extreme cases the latter effect appears as alternately bright and dark vertical striations on the extreme left-hand side of the picture. Careful observation of the flyback pulse on a suitable cathode-ray oscilloscope will usually reveal high-frequency rings on the edges of the flyback pulse—these are due to shock excitation of stray resonant circuits formed in the transformer and appear as kinks in the edges of the pulse. The effect of damping resistance on scan linearity will be discussed in the next section.

A serious defect of the output stage of the scanning circuit is the low efficiency resulting from the fact that the reactive energy built up around the deflector inductor must be removed from it at the end of each scan. This energy is dissipated during the flyback in a damping resistor. The amount of energy required to deflect the actual beam is, of course, negligible. Accordingly methods have been devised to transfer the energy into a storage device at the end of each scan and make

use of the energy so saved to produce subsequent scans. One method of partially achieving this result is to connect a capacitor in series with the damping resistor across the deflector inductor. The result of connecting a series capacitor-resistor net across a winding associated with a magnetic field produced by passing current through it is similar to that of connecting a series inductor resistor network in parallel with a capacitor charged by connection across a source of e.m.f. In both cases, removal of the source of current or voltage is followed by decay of the energy associated with the circuit and if the damping is small the decay will take place in damped oscillatory fashion due to successive overswings of inductor current or capacitor voltage. In the case of the deflector inductor the additional capacitance, with a suitable value of resistance, can be allowed to cause sufficient overswing to produce up to about 15 per cent increase in scan length before serious non-linearity occurs. Ultimately, this technique would lead to an approximately sinusoidal scan. The capacitance is chosen to make the deflector inductor circuit resonate approximately to scan frequency. This technique is called "reactance scanning."[12, 13]

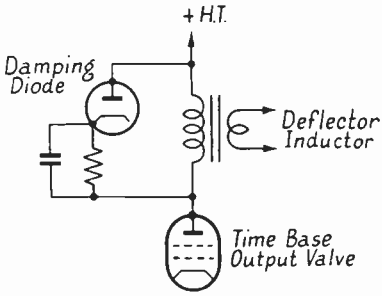

FIG. 4.10E. USE OF A DIODE FOR DAMPING THE LINE OUTPUT CIRCUIT

A very satisfactory method of absorbing the energy while achieving a short flyback involves the use of a high-voltage low-impedance diode, loaded by a long time constant *CR*, connected across the current transformer primary as shown in Fig. 4.10E. During the initial half-cycle of the flyback ring the diode is wrongly connected in direction to allow it to conduct, but on the next half-cycle it passes the flyback energy into the capacitor, which then discharges slowly through the parallel resistor and "holds off" the diode or limits its current during the subsequent scan. The diode circuit may,

alternatively, be connected across the transformer secondary winding.

It will be understood from the explanation of the pulse method of H.T. generation given in Chapter III that the diode arrangement just discussed may be adapted to the generation of E.H.T. for the picture tube, as there described, or for boosting the H.T. of the low-voltage power supply feeding the output stage. The latter development is shown at Fig. 4.10F; it will

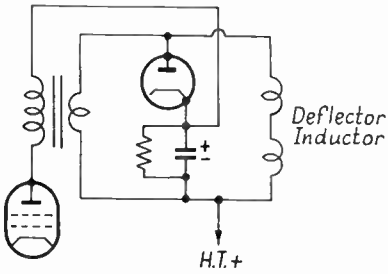

FIG. 4.10F. BASIC H.T. "BOOST" CIRCUIT

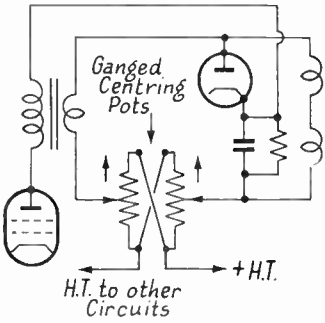

FIG. 4.10G. APPLICATION OF ELECTRICAL CENTRING TO THE CIRCUIT OF FIG. 4.10F

be seen that the H.T. side of the current transformer primary is connected to the positive side of C (which charges on the flyback through the diode) and the other side of C is taken to H.T. positive. By this method, which represents another way of making use of the flyback energy, the effective H.T. voltage has been raised as much as 20 per cent.

Occasionally provision is made for electrical centring of the picture; a method for providing this facility is shown in Fig. 4.10G. The H.T. positive feed is introduced via the transformer secondary and a ganged two-section variable resistor develops a voltage from the feed current, which voltage can act in series with the deflector inductor and transformer secondary, in either direction and in amount depending on the setting of the sliders.

In view of its importance in regard to the energy efficiency and current linearity of the output stage the current transformer is worthy of consideration. Its design is made difficult

by the shape of the current wave handled and by the existence of the high flyback-pulse voltage; its windings must therefore be lightly coupled to minimize leakage reactances and its associated capacitances made as small as possible.

The two windings are usually wound on sectional concentric bobbins, while the core is made up of T and U laminations. Although silicon iron (e.g. "Stalloy") is often employed in both line and frame transformers the comparatively high frequency at which the former operates justifies the use of very thin nickel-iron (e.g. "Radiometal" or "Rhometal") laminations. A gap of the order of 0·002 in. is necessary to offset the high mean polarization due to the d.c. component of the anode current. The high flyback-voltage pulse generated in the line transformer requires adequate insulation of the anode lead; this is often of high-voltage cable and taken out of the can housing the transformer at the opposite end from the H.T. and secondary leads. Satisfactory internal insulation is achieved by baking and filling the can with a suitable insulating oil or jelly before sealing off. When the transformer is driven the laminations vibrate at line frequency and the resultant whistle is quite normal, although by careful electrical and mechanical design it may be reduced to small proportions.[10, 11, 12, 13]

4.11. Linearization of the Driven Time Base. So far the problem of achieving sufficiently good scan linearity has been left aside. The desired result, namely, perfect linearity of output current, does not necessarily require perfect linearity throughout the circuit, since opposite kinds of non-linearity may occur. The practical problem is to reduce the various causes of non-linearity to the same order of magnitude and then to balance them against each other so that together they cancel. In this process it is unwise to rely chiefly on the balancing of circuit distortion against distortion of the opposite kind arising from valve characteristic curvature. It is good practice to reduce the latter by suitable choice of the valve type and of its operating conditions and by appropriate application of negative feedback since it varies from valve to valve

of nominally the same type and changes as the valve ages. The important practical point is that the output stage inevitably introduces distortion in that the waveshapes of input voltage and output current differ. Moreover, it is much easier to modify the shape of the grid driving voltage than the current in the output circuit. Accordingly, it is the usual practice to limit the output stage non-linearity and to correct finally by modification of the grid voltage waveshape. Perfect linearity is never achieved, but with care the amount of non-linearity can be brought well below what is normally discernible to the average viewer.

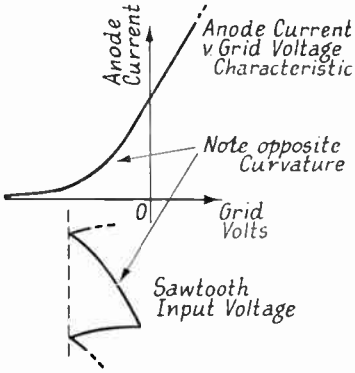

FIG. 4.11A. PARTIAL CORRECTION OF SAWTOOTH INPUT CURVATURE BY USING THE CURVED CHARACTERISTIC OF THE OUTPUT VALVE

INTEGRATOR CORRECTING NETWORKS.* The voltage wave produced by the sawtooth generator circuits described in earlier sections is markedly exponential, with downward curvature, and further deterioration of the same kind may be caused by the coupling to the output stage and between the latter and the deflector inductor. On the other hand, there is the opposite distortion due to the upward curvature of the grid volts-anode current characteristic of the output valve (see Fig. 4.11A). Usually the latter is insufficient to restore linearity and a correction network is placed between the two stages. The principle of such networks will be explained with

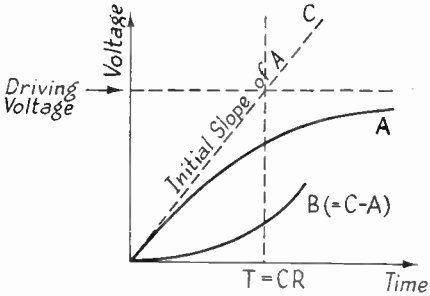

FIG. 4.11B. COMPARISON OF EXPONENTIAL CURVE (A) WITH IDEAL LINEAR RISE (C)

* See Appendix I (§ A 1.5).

reference to Fig. 4.11B. Curve A represents the shape of the output voltage obtained from generators based on the *CR* integrator. The difference (B) between this curve and the ideal linear rise C, obtained by continuing the initial slope of the actual output, measures the extent of its non-linearity.

A correcting wave similar to this difference curve may be generated by feeding the sawtooth output of the generator into an additional *CR* network similar to that in which the exponential wave is generated. The formation of the correcting wave will be readily understood if the input to the additional

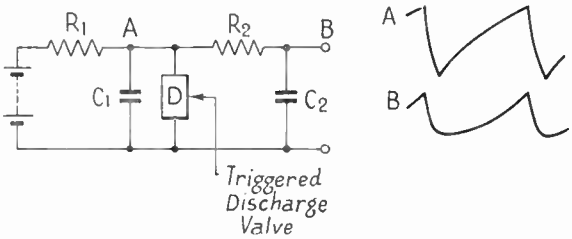

FIG. 4.11C. USE OF ADDITIONAL *CR* (I.E. C_2R_2) TO DEVELOP CORRECTING WAVE OF FORM *B* IN FIG. 4.11B

section is regarded as being exactly linear; for since the extra *CR* is of long time constant the large resistance will swamp the negligible reactance of the large capacitor and the input impedance will be practically purely resistive, so that the input current will rise linearly with the input. When a constant current flows into a capacitor the p.d. developed across the latter rises linearly (Fig. 2.4E); it follows that with a linearly rising charging current the p.d. builds up at an ever-increasing rate, i.e. with *upward* curvature (actually the law of the curve is parabolic, i.e. $e \propto t^2$). If the input voltage has only a slight downward curvature instead of being truly linear the result is substantially the same (see Fig. 4.11C). Thus it would seem feasible to associate an additional *CR* with the original *CR* and so combine the latter's output, and the correcting wave derived from it, that an almost linear total output results.

Two circuits built up on this basis have been patented by G. F. Hawkins* and used subsequently in Murphy receivers.

* British Patent No. 511600.

In the first, the charging capacitor of the exponential wave generator is divided into two series portions and an extra CR integrating circuit is connected across the upper part. It will be clear from (i) of Fig. 4.11D that the total output will consist of the sum of that developed across the additional integrator and the proportion of the exponential wave left across the lower part of the split charging capacitor. Thus if the latter is correctly divided the output is practically linear; the residual non-linearity is due (*a*) to the loading of the original circuit by the added section and (*b*) the imperfect integration of the latter, both causes decreasing with increase of the time constant of the additional network. In the alternative arrangement (ii) the correcting circuit is connected directly across the charging capacitor of the basic network and the required proportion of the exponential output of the latter is tapped off the added resistor. A third arrangement (iii), which functions in the same manner as the second, has been used successfully by the writer; it is related to the two Hawkins circuits by well-known circuit transformations.

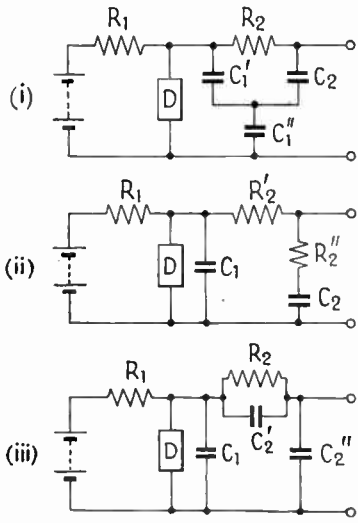

FIG. 4.11D. THREE DEVELOPMENTS OF FIG. 4.11C IN WHICH WAVEFORMS OF THE TYPES *A* AND *B* ARE EFFECTIVELY ADDED BETWEEN THE OUTPUT TERMINALS

USE OF LINEARIZING VALVES. While the correcting circuits just described are normally adequate in modifying the sawtooth generator linearity, and the overall non-linearity of the time base is thus reduced to very small proportions, more linear generators employing a linearizing valve have recently been introduced into commercial practice but are unlikely to become popular because of the extra expense incurred by the need for an additional valve unless the discharge valve and linearizing

valve are combined, in which case circuit design is seriously restricted.

One method employs the Miller-Blumlein integrator, in which extreme application of degenerative feedback to a valve passing the capacitor charging current keeps the latter remarkably constant. The basic arrangement is shown in Fig. 4.11E. When the H.T. voltage is applied to the circuit, anode current commences to flow and the anode potential falls. The anode is capacitatively coupled to the control grid so that the negative change of anode potential is fed back to the grid-cathode circuit. The grid potential cannot fall by more than a few volts, however, otherwise anode current would cease—it must therefore remain within the grid base. Accordingly, the total p.d. across the grid resistor, which is returned to the H.T. positive line, remains within a few volts of the applied H.T. voltage and drives a corresponding current through the resistor into the lower side of the capacitor. Since the equilibrium conditions involve the potential of the grid and therefore of the lower side of C, remaining practically constant, this charging current will cause a corresponding fall of anode potential. Since the anode and grid potential charges tend to be self-cancelling, owing to almost entire feedback of anode voltage to grid, the grid resistor current and valve anode current remain extremely constant and cause the almost perfectly linear "run-down" shown at (i) in Fig. 4.11E. A disadvantage of this circuit is the abrupt initial drop of several volts in the anode potential required to produce the equilibrium grid voltage. The linear fall eventually flattens out ("bottoms") and to make the circuit a recurrent linear wave source the run down must be automatically terminated before bottoming occurs. This may be achieved by incorporating the transitron trigger principle described in an earlier section; the resultant circuit being as shown at (ii) in Fig. 4.11E. If the output is taken from the anode to drive a normal output stage a phase inverter must be included, but since a relatively small input (about 20 V (pp)) is needed by the output stage it may be derived in correct polarity from a resistive cathode load.

An alternative method of using heavy feedback to linearize the capacitor charge adopts the bootstrap method of arranging the valve. The basic circuit is shown at Fig. 4.11F. The charging capacitor p.d. is applied to a valve having a large

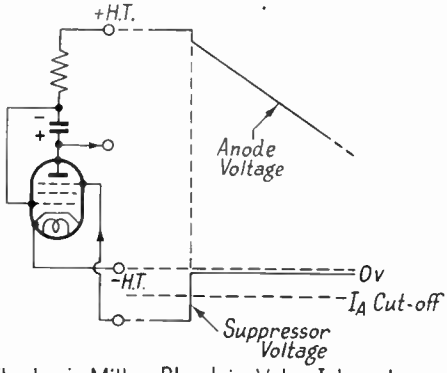

(i) The basic Miller-Blumlein Valve Integrator

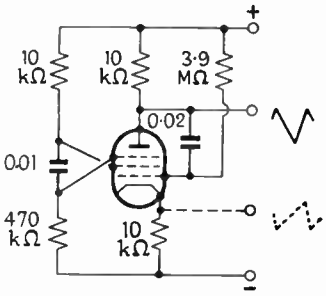

(ii) Practical arrangement for a Frame Base Generator of a Transitron-Miller combination

(Courtesy 'Wireless World')

FIG. 4.11E. THE MILLER-BLUMLEIN INTEGRATOR

cathode load (of the order 50 kΩ) and the output voltage appearing at the cathode is fed back through a large d.c. blocking capacitor to the junction of the split charging resistor. This is a case of positive feedback but does not lead to instability because of the low overall loop gain. The result of this arrangement is to cause the potential at the charging resistor junctions to rise during the charging periods; if the rise is sufficient the

normal tendency of the rate of charge of C_1 to drop is counteracted. Since C_2 develops a large p.d. which is maintained very nearly constant by the positive feedback, both grid and cathode of the valve rise together and at a constant rate, and the input to the valve is effectively the p.d. developed across C_2, since it controls that built up on C_1. The upper portion of the split charging resistor is often replaced by a diode connected with

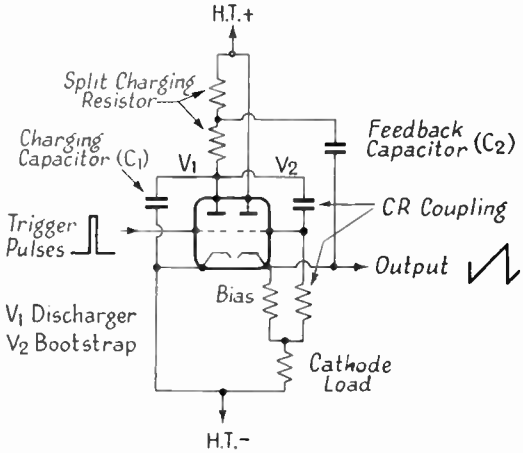

FIG. 4.11F. THE BOOTSTRAP LINEARIZED SAWTOOTH GENERATOR

its anode toward the H.T. line so that anode current is cut off by the rising potential fed back from the valve cathode and flows only during the flyback period. By comparison with the Miller-Blumlein integrator the bootstrap sawtooth voltage generator is slightly less linear but is more readily adapted to the time-base application, in which case the linearizing valve cathode is a suitable output point.

LINEARIZATION BY NEGATIVE FEEDBACK OVER OUTPUT STAGE. Methods of improving the linearity (by reducing distortion) of the output stage nearly all involve negative feedback. Since the output valve is controlled at its grid by a voltage wave in generating the sawtooth current, it is necessary to derive a voltage for feedback purposes which is proportional to the output current. Any difference between this voltage and that supplied by the sawtooth generator may be

regarded as a spurious signal arising in the output stage and if negative feedback is provided this signal tends to self-cancelling. The obvious method of deriving the required voltage is to insert a resistor (which may be made variable, for amplitude control) in series with the deflector inductor. While this arrangement has often been used, the power loss involved cannot usually be tolerated, particularly when all available scanning power is required to allow the highest

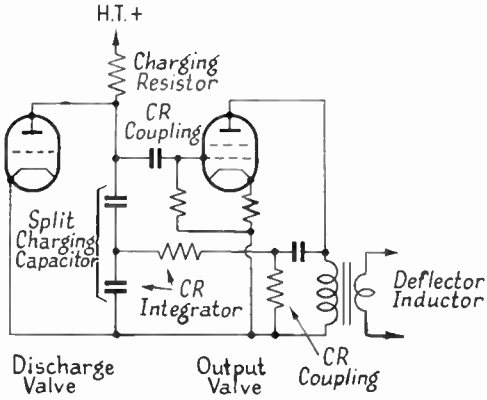

FIG. 4.11G. BLUMLEIN'S METHOD OF LINEARIZATION

possible tube accelerating voltage to be used. A more efficient method of obtaining the feedback voltage, due to A. D. Blumlein,* employs a series *CR* across the scanning inductor and takes the feedback voltage from the capacitor. It can be shown that when the time constant of the additional circuit branch equals that of the inductor (effectively a series *LR* branch) the wave-shapes of current in the inductor and p.d. across the capacitor are similar—the voltage across an inductor is proportional to the rate of change of the current passing through it and must be integrated to be made similar in shape to the current wave. A practical application of this principle is shown in Fig. 4.11G; it will be noted that the voltage developed across the integrator capacitor is fed back into the grid-cathode circuit of the output valve by connecting it in

* British Patent No. 479113.

series with the charging capacitor of the sawtooth voltage generator.

A somewhat similar arrangement, used in Murphy receivers, is shown in Fig. 4.11H. The H.T. supply to the output stage is tapped into the primary of the output transformer and the potential available at the free end of the primary consists of a series of negative-going spikes separated by nearly linear changes having a positive slope. Thus by feeding the sawtooth

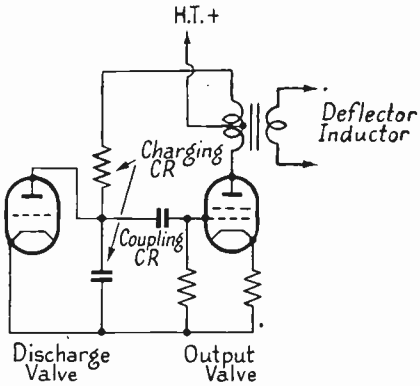

FIG. 4.11H. MURPHY METHOD OF LINEARIZATION

generator charging circuit from this point instead of from the steady voltage of the H.T. positive line the downward curvature of the sawtooth generator output wave is counteracted. The tapping is adjusted for optimum linearity.

When these methods of linearization, which compare (directly or indirectly) deflector current with the grid driving voltage, are employed, it is necessary not only to employ a very linear sawtooth generator but to minimize distortion inherent in the output stage. Thus it is usual to employ current feedback in the cathode circuit of the output valve by using an unbypassed bias resistor (see Fig. 4.11H). Negative feedback can also be of assistance in damping the flyback ring occurring in the anode circuit, since if this ring appears with phase-inversion at the grid it tends to cancel the anode oscillation.

EFFECT OF OUTPUT CIRCUIT DAMPING. A certain amount of

distortion arises in the output circuit of the output stage. Ideally the valve would supply a perfectly linear rising current to a purely inductive load. When the latter is paralleled by resistance, however, as is effectively the case in practice, the resistance bypasses a proportion of the current which rises exponentially to a limiting value and causes the current in the inductive load to rise with an initial upward curvature, as was shown in Fig. 2.3F. Again, if the current supplied to the scanning inductor has normal (downward) exponential curvature, as is usual, connection of a resistor across the inductor changes its current shape. If R is high its effect is negligible, but as it is reduced the waveform of inductor changes in a similar manner to the output of a CR integrating circuit fed with an exponential voltage wave, as was shown in Fig. 4.11C. The practical result of these two simple examples is that a parallel damping resistor may appreciably affect the linearity of the scan, and in a favourable manner.[12, 14, 15, 16, 19]

4.12. Sawtooth Current Oscillators. The demand for low-price receivers has led to the development of single-valve directly-synchronized power oscillators capable of generating a fair approximation to the ideal sawtooth current wave but the increased difficulty of design, more critical performance and small saving in cost has not led to extensive use of this class of time base. The sawtooth current generator differs from the conventional sinusoidal oscillator in having as little capacity as possible (i.e. strays only) across the inductors needed to couple the anode and grid circuits of the valve; moreover, the coupling between the inductors is very tight and a step-up from anode to grid may be employed. By comparison with the blocking oscillator it has no long-time-constant CR system in the grid/cathode circuit, although a low- or medium-time-constant CR system (insufficient to cause grid-blocking) may be incorporated for frequency control. The basic circuit is shown in Fig. 4.12A, together with a table of characteristic waveforms. Originally a power triode operating with little or no grid bias was employed; more recently beam tetrodes with anode to screen coupling, leaving the control grid free for

synchronization, have been adapted to this type of circuit (see Fig. 4.12B).

When H.T. voltage is applied to the circuit terminals current flows through the valve and anode inductor and builds up in like

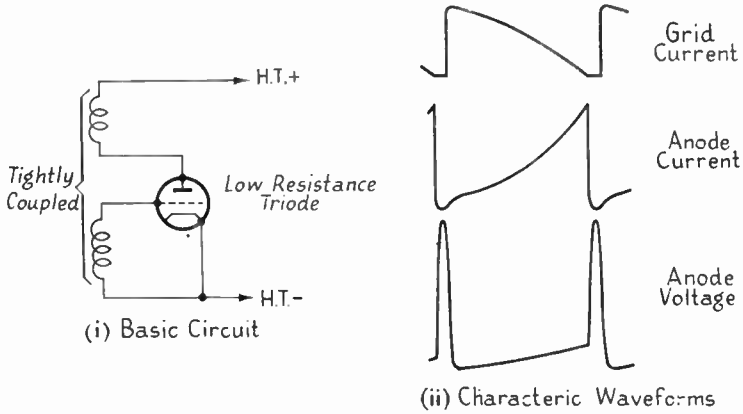

FIG. 4.12A. TRIODE SAWTOOTH CURRENT OSCILLATOR

manner to the p.d. of the capacitor in the basic sawtooth voltage generator described in an earlier section. It was explained in Chapter II that the application of a step voltage to a pure inductance causes a perfectly linear current rise in the latter. In the present application it is therefore desirable to make the ratio of anode inductance to the total (valve plus inductor plus power supply) circuit resistance as high as possible. The valve resistance is the major resistive component and its effective value is reduced by the feedback circuit not only by the fact that the rising anode current induces a positive voltage at the grid, but also by the reduction in a.c. resistance caused by the positive feedback. Both factors arise as secondary results of the need for back coupling to make the circuit

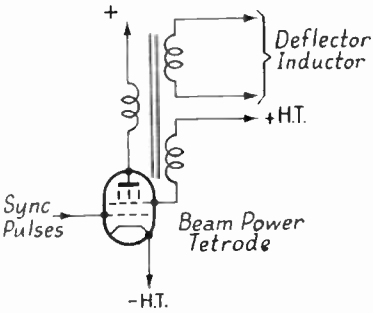

FIG. 4.12B. USE OF A TETRODE AS A SAWTOOTH CURRENT OSCILLATOR
(After Sziklai, Reference 18.)

self-running. When the rate of increase of anode current commences to fall, the positive induced grid voltage drops; the process is therefore cumulative and the induced grid voltage rapidly reverses and cuts off, or considerably reduces, the anode current. When the anode current reaches its lower limit the reversing action occurs again and the cycle repeats.

A disadvantage of this circuit is the large negative pulse induced at the grid by the rapid collapse of anode current. Accordingly it is desirable to feed the synchronizing voltage to the grid through a diode gate having its anode towards the cathode so that the negative grid pulse makes it non-conductive. An interesting feature of the circuit, at least in the frame case, is the possibility of using the deflector inductor as the anode inductance, but some method of cancelling the field due to the mean (i.e. the d.c. component) anode current is necessary. One way of achieving this cancellation is to smooth off the anode current and pass it through an auxiliary anode inductor so wound in relation to the deflector inductor that the mean component of the field produced by the latter is cancelled. In the case of the line circuit the deflector must be fed from a tertiary winding on the feedback transformer or auto-transformer coupled to the grid inductor.

The problem of damping the flyback applies equally to the current oscillator as to the driven output stage and a diode has been employed for this purpose in the manner discussed. The principle of "reactance scanning" and methods of efficiency improvement can also be adapted to the oscillator. Recently methods of using a triode both as a flyback damper and as a linearizing element have been developed. While these refinements considerably improve the performance of the simple oscillator and make it more comparable to that of the driven circuit the advantage of reduced cost is not thereby entirely lost, since these refinements are desirable even in the driven circuit. The serious disadvantage of the self-running circuit is the interdependence of its controls; in particular the amplitude control will tend to pull frequency and unless great care is taken in the design and operation of the circuit synchronism

will be lost when the scan amplitude is changed, particularly when the signal strength is low.[13, 17, 18]

BIBLIOGRAPHY

(1) PUCKLE, O. S. *Time Bases.* Chapman & Hall (1943).

(2) COCKING, W. T. *Television Receiving Equipment.* Ch. VI, VII. Iliffe (1940).

(3) PARR, G. Hard Valve Scanning Circuits. *T.S.S.W.* Aug. (1938) 475; Sept. (1938) 540.

(4) M.I.T. STAFF. *Principles of Radar,* Ch. II. McGraw-Hill (1946).

(5) HALLETT, B. A Method of Demonstrating the Action of the Multivibrator. *E.E.* April (1943) 476.

(6) HUGHES, E. Multivibrator Action. *W.W.* Nov. (1942) 266.

(7) TERMAN, F. E. *Radio Engineers' Handbook.* McGraw-Hill (1943) 511.

(8) BRUNETTI, C. The Transitron Oscillator. *P.I.R.E.* 27 (1939) 88.

(9) FLEMING-WILLIAMS, B. C. A Single-valve Time Base Circuit. *W.E.* 17 (1940) 161.

(10) SOMERS, F. Scanning in Television Receivers. *E.* Oct. (1937) 18.

(11) FRIEND, A. W. Television Deflection Circuits. *R.R.* March (1947) 98.

(12) SCHLESINGER, K. Magnetic Deflection of Kinescopes. *P.I.R.E.* Aug. (1947) 813.

(13) SCHADE, O. H. Magnetic-deflection Circuits for C.R. Tubes. *R.R.* Sept. (1947) 506.

(14) ——. Linear Sawtooth Oscillator. *W.W.* 4th May (1939) 425.

(15) COCKING, H. T. Linear Sawtooth Oscillator. *W.W.* June (1946) 176.

(16) COCKING, W. T. Deflector Coil Coupling. *W.W.* Nov. (1946) 360.

(17) MALTING, L. R. Triode Linear Sawtooth-current Oscillator. *P.I.R.E.* Dec. (1944) 753.

(18) SZIKLAI, G. C. Current Oscillators for Television Sweep. *E.* Sept. (1946) 120.

(19) KEEN, A. W. Television Time Base Linearization. *P.I.R.E.* Jan. (1949) 61.

(20) ——. Saw-tooth Current Waves. *W.W.* 18th May (1939) 473.

CHAPTER V

THE SYNCHRONIZING CIRCUITS

TELEVISION receivers differ widely in the arrangements adopted for achieving exact synchronism of the time-base generators. In particular a wide variety of methods is available for synchronizing the frame time base with satisfactory interlacing.

5.1. Synthesis of the Synchronizing Signal. In view of the need for exact synchronism between the scanning circuits at the transmitting and receiving ends of the television system, and of the common use of relaxation-type wave generators in the scanning circuits, it is natural that a sequence of vertical step voltage impulses should have been chosen for synchronizing purposes. A voltage step having a vertical edge occurs at a definite instant, and if a series of such impulses are used to initiate a time-base sweep the latter will commence definitely each time a step occurs and an exactly synchronous trace will be formed on the picture tube. If this series of voltage steps is to be restricted to a definite voltage range in order to leave a voltage range free for separate representation of the picture signal, it is necessary for each synchronizing edge to be followed by a voltage change of the same amplitude but of opposite polarity so that the signal returns to the range reserved for picture modulation after each synchronizing impulse; otherwise a "staircase" wave would be formed. It is not essential that this reverse synchronizing voltage change shall also be of step form, but the synchronizing edge must be followed by a sufficient period to allow the circuits to respond to it before it is removed, and once this synchronizing period has elapsed it is desirable that the signal should return to black level quickly so that the maximum time is left available for picture modulation.

THE BASIC SQUARE-PULSE WAVE. It is usual therefore to make the reverse synchronizing voltage change of step form

also and the resultant ideal wave-shape is rectangular, as already shown in Figs. 1.8A and 1.8B. Each synchronizing edge is followed, after a small delay, by a reversed step; each pair of steps so formed comprises a square pulse. Successive pulses are separated by comparatively longer periods; in other words, each synchronizing pulse represents a small portion (e.g. 10 per cent in the British signal) of the cycle of the waveform resulting from the recurrence of the pulses. It is customary to speak of the "(pulse) recurrence rate," "(pulse) recurrence frequency" (p.r.f.), or "(pulse) repetition rate" of this waveform. The duration of the synchronizing pulse is made sufficient to allow the scan flyback to take place and during this period the picture modulation is suppressed at the transmitter (see Chapter I).

COMBINATION OF THE LINE AND FRAME SYNCHRONIZING PULSES. The synchronizing waveform just constructed will control only one time base satisfactorily. Since two time bases need to be synchronized in the receiver it is necessary to provide two such waveforms, each having suitable values of pulse recurrence rate and pulse width for the desired line and frame transmission constants. The two pulse trains required must therefore be combined in such a manner that they may be separated readily at the receiver. It would be simplest to interrupt the line pulse train at frame frequency to allow insertion of the frame pulses and to make the latter sufficiently different from the line pulses to facilitate separation, as shown at (i) in Fig. 5.1A. For reasons of stability, however, it is desirable not to interrupt the line-synchronizing impulses while the frame pulse occurs but to continue them through the latter, which needs to be several line periods in duration to allow adequate time for the frame flyback (ii). If alternate frames are interlaced by the odd-line method as in both British and American systems, the ratio of line to frame frequencies will be such that the framing pulse will differ on alternate frames in its timing relative to adjacent line pulses. Thus, if the first framing pulse were to start at the instant when the leading edge of a line pulse would normally occur the next

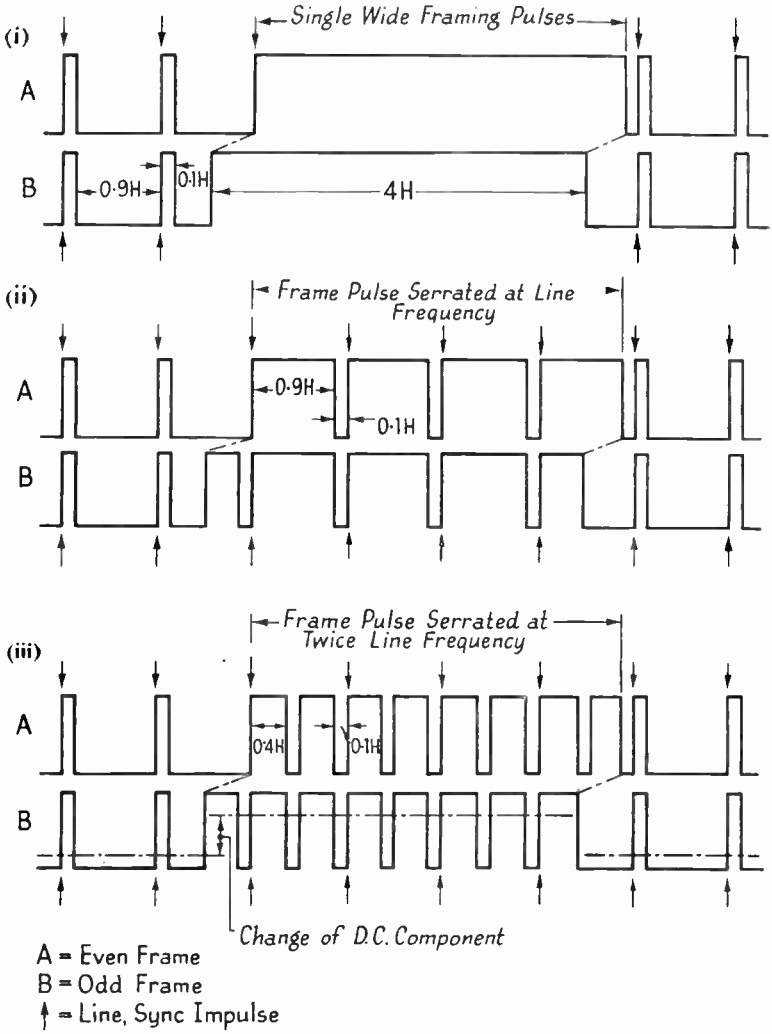

FIG. 5.1A. SYNTHESIS OF THE BRITISH SYNCHRONIZING SIGNAL

framing pulse would start approximately half-way between two successive line pulses. In the first case the preceding frame is termed "even," and in the alternate case the frame being terminated is said to be "odd." It will be noted (ii) that the line synchronizing steps in the long framing pulse are *preceded* by the reversal steps because the existence of the framing pulse holds the intermediate voltage at the opposite end of the synchronizing voltage range. Accordingly the framing pulse is serrated by a number of narrow pulses of opposite polarity which are similar in appearance to inverted line pulses. The framing pulse is thereby divided into a sequence of shorter pulses each of which has an actual duration of nearly one line period. If the resultant framing signal is compared on alternate frames it will be observed that while the first framing pulse is nearly one line period in duration in the "even" case it is less than one half-line in duration in the "odd" case. This irregularity cannot be tolerated in practice because it would make the problem of achieving correct interlacing of alternate frames quite difficult unless complex circuitry were resorted to. Accordingly the framing pulse is serrated at twice line frequency as drawn at (iii). One small irregularity still remains—that of the variation between alternate frames in the length of the period between the last line synchronizing pulse and the commencement of the framing signal. In the standard British transmission this discrepancy has been accepted but in the American signal it has been rendered ineffective by the insertion of a group of "equalizing" pulses between the last active line and the commencement of the framing signal; as a result the synchronizing circuits are in the same condition when the framing signal occurs after all frames. The equalizing pulses are also introduced after the framing signal so that the latter occurs centrally within—in the entire framing period (see Fig. 5.1B).

Polarity of the Synchronizing Signal. In the accompanying diagrams the framing pulses have been drawn with positive-going synchronizing edges, but in actual circuits the synchronizing signal may occur with either polarity, e.g. in a

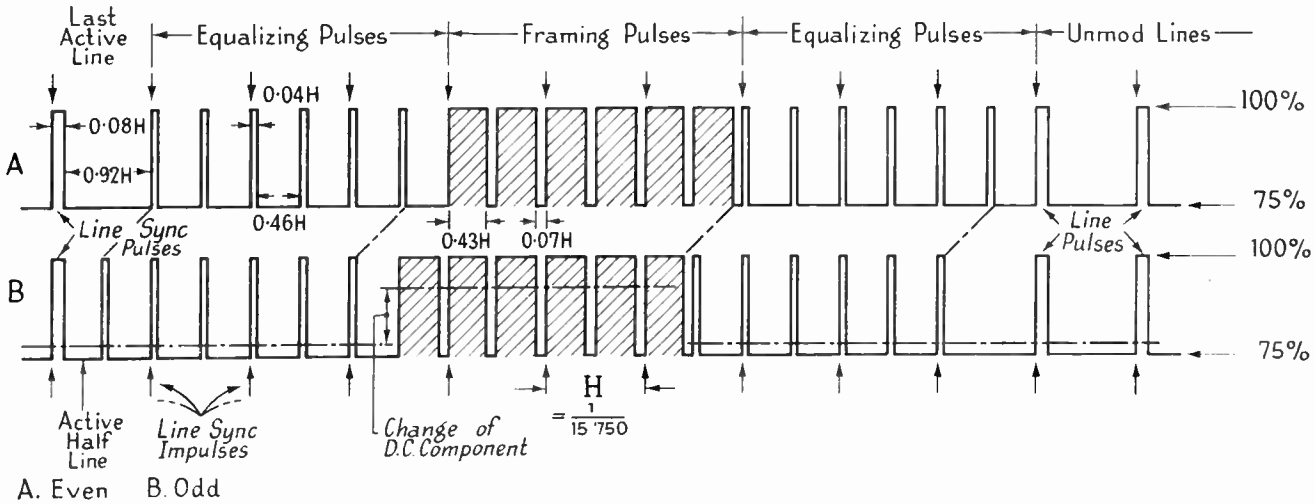

FIG. 5.1B. THE AMERICAN SYNCHRONIZING SIGNAL

synchronizing amplifier of the normal type (grid input, anode output) the signal polarities at input and output will be opposite. An important point, which will be understood later, is that the signal supplied to the actual synchronizing system must be complete with its d.c. component.

HARMONIC COMPONENTS OF THE SYNCHRONIZING SIGNAL. In the foregoing synthesis of the complete synchronizing signal the signal has been considered as a complex recurrent transient. In the British case two pulse trains, one at line frequency (10,125 per sec) and one at twice line frequency (20,250 per sec) are switched in and out at frame frequency to produce the complete signal, while in the American case three pulse trains, one at line frequency (15,750 per sec) and two (one for frame synchronization, the other for equalization) at twice line frequency (31,500 per sec) are involved. Certain aspects of synchronization require recognition of its harmonic content, i.e. as a fundamental sinusoid accompanied by harmonics. On this basis the framing and equalizing pulse trains which interrupt the line pulse train both have twice the basic repetition rate of the latter; they may be regarded as being due to discontinuous changes in the phase and amplitudes of the harmonics of the line frequency fundamental.

The change of waveform constituting the framing signal causes a change in the level of the d.c. component; this fact is the basis of a method of frame synchronization to be described later. An important point in the American waveform is that although the equalizing pulses have twice the recurrence frequency of the line synchronizing pulses their width is half that of the latter; as a result there is no change of d.c. component during the equalizing period (see Figs. 5.1A and 5.1B).

5.2. The Synchronization of Oscillators. Oscillator circuits are of two kinds. While the basic arrangement consists of an amplifier valve having a feedback network connected so as to provide sufficient grid excitation in the correct phase to maintain the anode oscillation, the amplitude, frequency and wave-shape of the latter and the stability and controllability of the circuit may depend almost entirely on a stable circuit

contained in the external network or on the relatively unstable valve and its voltage supplies. At the one extreme, the valve may be backcoupled lightly through a stable, high-Q tuned circuit to produce a sinusoidal oscillation whose frequency and waveform depend chiefly on the tuned circuit. At the other extreme tight backcoupling, through a substantially aperiodic circuit as in the blocking oscillator, provides a pulse voltage of low stability and considerable dependence on the valve and its operating potentials. Circuits of the latter type are called "relaxation" oscillators; all direct sawtooth generators are of this type.

It was explained in the last chapter that a regular sequence of narrow spikes represents an ideal synchronizing wave for the type of circuit employed for sawtooth generation. When the period of oscillation of the latter, which depends on the rate at which the valve is allowed to come out of cut-off (usually by a *CR* system in the control-grid/cathode circuit), is adjusted (usually by variation of the resistance) to be a little longer than that of the synchronizing pulse wave, the latter takes control by initiating the recommencement of anode current before it would normally occur.

The fundamental problem in television time-base synchronization is to produce a wave whose frequency and phase is exactly the same as that of the synchronizing component of the received signal. The method of using pulses derived from the synchronizing signal itself to trigger a circuit which is very susceptible to control voltage and not markedly sensitive to frequency variation is not the only solution to this problem; also, it has two defects. In particular it is extremely sensitive to noise and other spurious signals because it requires wide bandwidth in the synchronizing circuits in order to preserve the pulse shape. The alternative method in its ideal form employs an oscillator which is naturally disposed to oscillate in the region of the required frequency and controlled by a direct voltage representing the error in phase and frequency between the oscillator and the synchronizing signal in such a manner that the error tends automatically to zero. This

method is capable of operating under conditions of heavy interference without loss of synchronism and is of particular advantage in the American system, where heavy interference (in driving the picture tube towards black) has a less objectionable effect on the picture than in the British case. This alternative method is called "flywheel synchronization"; it does not necessarily require the automatic circuits mentioned above and may be applied to a certain extent in the triggered type of circuit.[3]

5.3. The Functions of the Synchronizing System. The purpose of the synchronizing circuits is to remove the picture modulation from the composite video signal and derive, from the resultant synchronizing signal, waveforms suitable for holding the two scanning circuits in synchronism with their respective timing pulses contained in the signal. Accordingly the synchronizing system as a whole has one input and two outputs; the input is usually taken from the first output of the video circuit, where the signal amplitude is greatest, so that synchronism will hold down to lower signal levels than would be the case if a smaller signal were used. Once synchronism has been established manually by the hold control of each time base the synchronizing circuits should maintain it over a wide range of conditions of signal level and interference.

Ideally it would be necessary for the synchronizing system to separate the picture modulation from the synchronizing signal and then split the latter into its components, so that the processes involved would be inverse to the synthesis described previously (§ 5.1). While the removal of picture modulation presents no difficulties, and is invariably carried out as the initial step, it is not easy to separate the two pulse trains representing the line and frame synchronizing signals and the usual practice is to accentuate the respective portions of the synchronizing signal by passing it through two separate shaping networks arranged in tandem. This accentuation must be achieved without mutilation of the step impulses constituting the signal particularly when pulse triggering of the time base

is preferred to flywheel synchronization. The problem of deriving the two time-base synchronizing waves is considerably increased if removal of the picture modulation is incomplete (leakage over stray capacitance usually occurs in some degree) or if the television signal is accompanied by spurious voltages such as excessive noise or man-made static; again, feedback of flyback pulses from the time bases, possibly by way of a common H.T. supply, may occur. The degree of synchronism

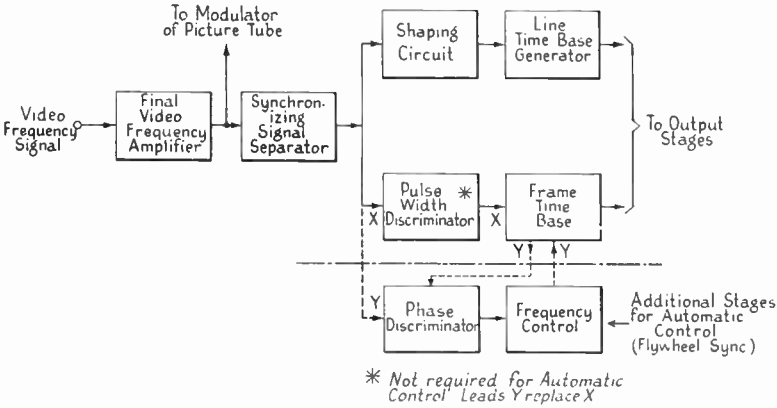

FIG. 5.3A. GENERAL SCHEMATIC OF THE SYNCHRONIZING SYSTEM

achieved is often determined by the extent to which such influences are removed rather than by the choice of the synchronizing circuits.

BLOCK SCHEMATIC OF THE SYNCHRONIZING SYSTEM. A generalized block schematic of the complete synchronizing circuit system required by the trigger pulse method, as used exclusively in this country (to date) and very frequently in the U.S.A., is shown in full in Fig. 5.3A. The additional stages required for automatic frequency and phase control of the time bases are indicated (for one time base only) by dashed lines. The latter method is being adopted increasingly in the U.S.A., despite the considerable increase in cost. It should be mentioned that such circuits are more worth while with negative signal modulation because the picture is "usable" under conditions of greater interference than with positive modulation.

Very often only one time base, usually the line circuit, is controlled in this manner.

Considering the simpler method it will be noted that the composite signal is fed at video (rather than carrier) frequency from a point following the receiver demodulator into the first stage. This is an amplitude filter or discriminator which responds to the synchronizing portion of the signal only and effectively clips off the picture modulation. For this stage to operate satisfactorily the signal fed to it must have its d.c. component so that the synchronizing pulses always occur between the same voltage levels. Moreover, the clipping level should be set automatically by the mean signal strength. The separated synchronizing signal is then fed firstly to a shaping circuit which accentuates the line synchronizing edges and secondly to a parallel network which responds to the framing signal and suppresses the line frequency pulses. The whole circuit must be arranged so that the two scanning circuits are adequately buffered from each other and from the synchronizing signal separator. Normally both time bases employ an unstabilized relaxation oscillator (e.g. one of the types described in the last chapter) which responds to each pulse fed to it and rapidly switches back to the commencement of its linear voltage rise each time it receives a pulse. For stable working and minimum dependence on received signal strength the synchronizing voltage should be applied to the most sensitive point (usually the discharge valve control grid) of the generator and the natural frequency of the latter adjusted to a value very close to the required frequency. Greater stability, particularly in the presence of transient interfering noises, can be achieved by coupling a high-Q tuned circuit to the oscillator in such a manner (e.g. by insertion in the grid circuit) that the tendency of the oscillator to work at the desired frequency is considerably increased. This modification introduces to a small degree the flywheel property and enables synchronism to be held when the synchronizing pulses disappear or fall appreciably in amplitude for brief periods. Flywheel synchronism may be achieved in greater degree by feeding the

synchronizing pulses to the controlled circuit through bandpass filters tuned to the required time-base frequency. In general, the trigger method is simpler and is quite satisfactory under normal conditions; flywheel technique is much superior, albeit more expensive, under conditions of heavy interference. The effectiveness of the flywheel method is limited by the fact that generators capable of directly generating a sawtooth voltage or current wave are inevitably of the unstable relaxation type; full exploitation of the method requires the automatic control circuits already mentioned, together with a suitable oscillator.

The general principle of automatic frequency and phase control can be understood from the block schematic of Fig. 5.3A. The synchronizing pulses are fed together with a voltage wave derived from the time base into a circuit capable of discriminating between the two signals in regard to their phase and frequency. If the two signals differ in phase or frequency, a voltage representative in magnitude and direction of the phase or frequency difference appears at the discriminator output and is applied to the time-base generator in such a manner that the phase or frequency of the latter shifts in such a direction as to reduce or "zero" the difference. At this point it should be remembered that phase and frequency are not fundamentally unrelated quantities. If two voltages (or currents) have the same frequency but differ in phase, their representative vectors rotate at the same speed and with an angular separation equal to the electrical phase difference. When the phase difference is constant the two vectors are stationary in relation to each other and the angular separation remains constant. If the frequency of one voltage is different from the other its vector will rotate relative to the other, and the angular difference will not remain constant but will increase linearly with time, although the actual angular separation will remain less than 180° and vary cyclically at the difference frequency. Frequency difference may therefore be regarded in terms of phase. Thus the discriminator must be a phase discriminator or detector and will "zero" to the condition in which successive synchronizing pulses occupy the same point in relation to

successive sweeps generated by the time base. A manual control of the time-base frequency must be used to establish initially the correct timing relationship, viz. the coincidence of the synchronizing pulse and the time-base flyback. The circuit technique will be described in a later section.

5.4. The Synchronizing Signal Separator. The amplitude filter needed for separating the synchronizing signal by removing the picture modulation from the composite video signal requires some form of non-linear device having ideally a characteristic of the form shown in Fig. 5.4A. The input quantity (usually signal voltage) is plotted horizontally and the response of the device (usually current) is plotted vertically. The relationship between the two quantities has a "broken" characteristic and until the input quantity passes a certain level no current flow occurs. Beyond this critical level the relationship between applied voltage and current response is ideally linear but in practice it usually has initial upward curvature. The signal voltage is applied to the device so that the voltage corresponding to black level coincides with the critical input at which current commences. The arrangement of input signal polarity depends on whether the current is used to develop the output signal voltage or to short-circuit the applied voltage (see Fig. 5.4B). In the first case (i) the synchronizing pulses have the polarity required to increase the current flow of the non-linear device; in the second case (ii) the composite signal is fed to the filter element through a high resistor which forms a heavy attenuator when the picture draws current and thereby practically short-circuits the output. In both arrangements the non-linear element is usually a valve, and may be a diode or an amplifier valve. In the case of the diode separator the anode-current/anode-voltage is the only

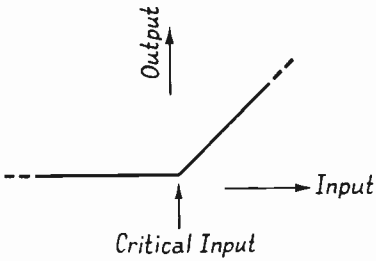

FIG. 5.4A. IDEAL CHARACTERISTIC OF SYNCHRONIZING SIGNAL SEPARATOR (AMPLITUDE FILTER)

available broken characteristic, but when an amplifier valve is chosen for separation the grid-voltage/grid-current characteristic or the grid-voltage/anode-current characteristic may be employed. Of the two basic methods available the one in which output current flows during synchronizing pulses is the better because output during the picture modulation is

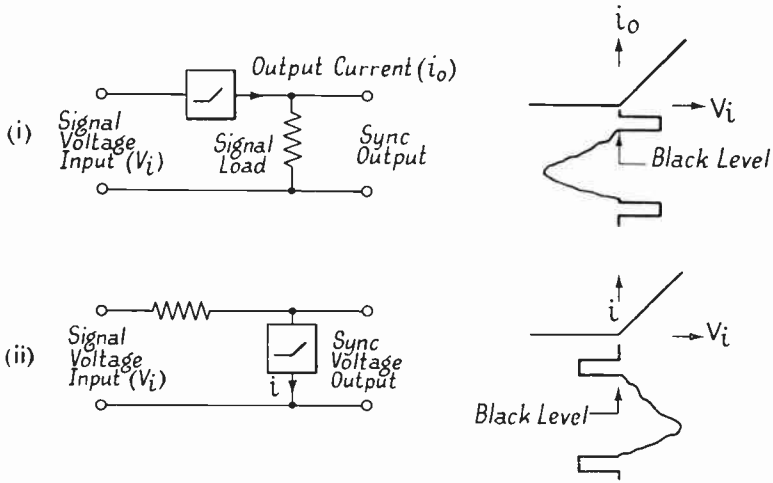

FIG. 5.4B. BASIC SYNCHRONIZING SIGNAL SEPARATORS

theoretically zero, whereas in the shorting method of using the non-linear element the attenuation cannot be infinite.

DIODE SEPARATORS. These are frequently employed in commercial receivers, either separately in the lower-priced examples, or in cascade with an amplifier-type separator where it is desired to minimize loading on the circuit supplying the video signal and to achieve good separation. Two circuit arrangements are shown in Fig. 5.4C. In the first (i) the diode acts as a gate; it is biased at its anode by a voltage tapped from the H.T. supply by R_1 and R_2 and smoothed by C_1, against the positive-going picture modulation and conducts only when the synchronizing signal drives its cathode potential below the bias voltage set by the potentiometer. The pulses of conduction current develop an output voltage across the load R_3 inserted in the anode lead. In the alternative arrangement

the diode is connected in shunt with the signal path and is biased at its cathode, by the same arrangement as before, so that it conducts only during picture modulation, when its resistance is so low compared with that inserted in the signal path that great attenuation occurs and the undesired picture signal output may well be less than that which leaks over the

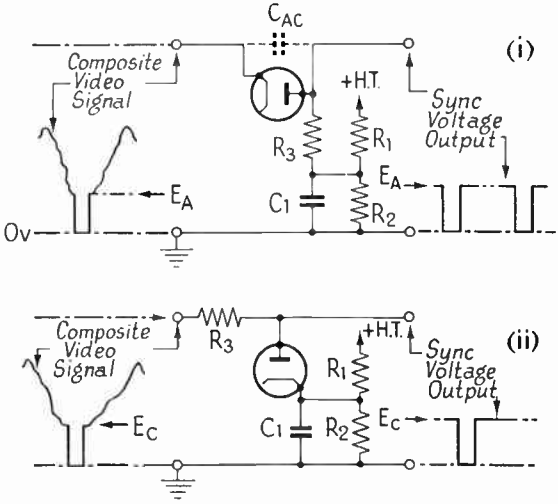

FIG. 5.4c. PRACTICAL DIODE SEPARATORS

anode-grid capacitance of the diode in the previous arrangement. If these circuits are supplied by a diode detector direct connection to its output terminal is used. Usually, however, the greater voltage output of the video amplifier is preferred and if direct coupling is chosen the diode separator bias must include a component large enough to back off the standing anode voltage of the video amplifier. In the latter case the voltage across R_1 will be less than that across R_2, and C_1 may be connected to H.T. positive rather than H.T. negative if the supply impedance is sufficiently low. If CR coupling from the video amplifier to the separator is preferred a diode d.c. restorer must be connected with its anode towards the earthy side of the separator circuit—at least where the diode is shunt connected—for with the series connection the valve is connected

in such a manner that d.c. restoration takes place and with satisfactory efficiency when R_3 is small. It is quite easy to achieve some measure of automatic biasing of the diode separator when it is desired to cater for wide variations of signal strength; R_1 is omitted and the time constant C_1R_2 made large enough to develop a substantially constant bias from the pulses of conduction current, which bias is, of course, proportional to the amplitude of the pulses.

Amplifier-type Separators. It will be noted that in the diode separators just described no polarity change occurs between input and output signal voltages. If a reversal of polarity is required in order to obtain the correct polarity of the synchronizing waveform(s) finally produced, the grid/cathode portion of an amplifier-type valve may be used as a diode separator (shunt type) and an inverted (amplified) signal obtained at the anode. An example is shown in (i), Fig. 5.4D. It must be capacitor-resistor coupled if fed from the anode of the video amplifier and must be fitted with a d.c. restorer. If the series resistor is made sufficiently large to minimize the residual picture signal at the grid (which signal is amplified to some extent together with the synchronizing pulses) the filter formed by this resistor and the input capacitance of the valve may seriously mar the steep edges of the line synchronizing pulses. Accordingly this circuit is usually used only when separate separators are employed, one for each time-base channel, with a more satisfactory circuit for line synchronizing separation.

The amplifier type of separator is best arranged (polarity considerations permitting) as an anode-bend detector, i.e. with positive-going synchronizing pulses and sufficient negative grid bias to cut off the valve when the signal input voltage is at black level. By comparison with the grid current limiting separator the input must be in opposite polarity so that if the synchronizing pulses are of sufficient amplitude to draw appreciable grid current, then capacitor-resistor feed may be adopted without the need for an additional diode d.c. restorer. The basic circuit is given at (ii) in Fig. 5.4D.

PRACTICAL SEPARATOR ARRANGEMENTS. Two important considerations in the arrangement of the separator are the need for minimum loading of the video amplifier, which may also have to operate a "spotter" (anti-ignition interference)

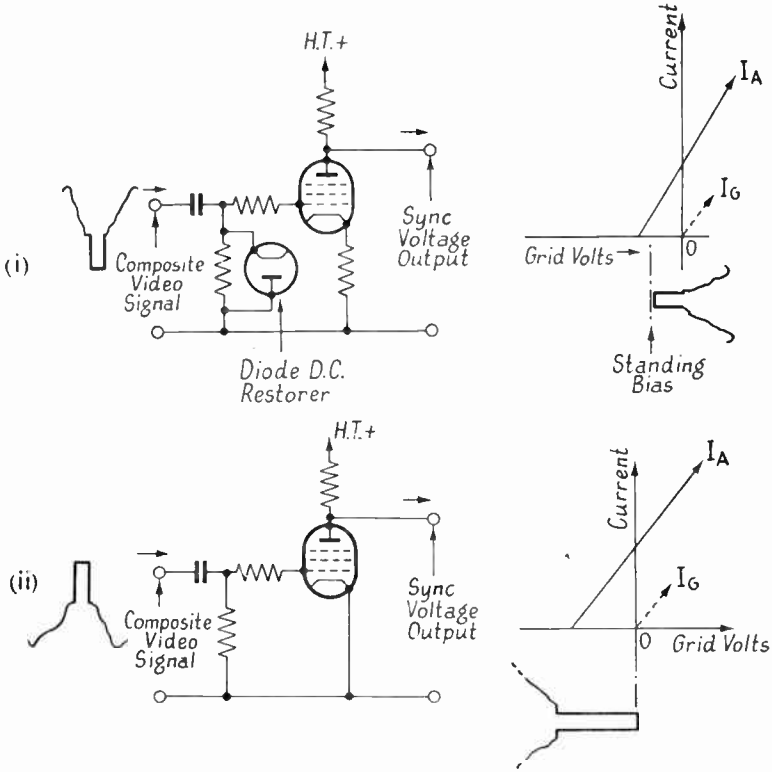

FIG. 5.4D. AMPLIFIER-TYPE SYNCHRONIZING SEPARATORS

circuit as well as the cathode-ray tube, and for minimizing coupling through it between the two time bases. Again, elimination of picture leakage is more important in the case of the line circuit, while more drive is often needed for satisfactory operation in the frame synchronizing channel. From the point of view of video amplifier loading a low capacitance type diode (about 2 pF) in the series circuit is attractive and one may be used to feed each time base separately without bringing the video loading up to that presented by a single

amplifier valve separator, although inter-time-base buffering may not be adequate in this arrangement. The amplifier-type separator has the advantage of providing some degree of buffering since one output may be taken from its anode and another from its screen grid or cathode. Two methods of arranging a cathode follower to decrease video amplifier loading and help with the buffering problem are shown in schematic form in Fig. 5.4E. In the first (i) the cathode follower is used to couple the cathode-ray tube to the video amplifier and the

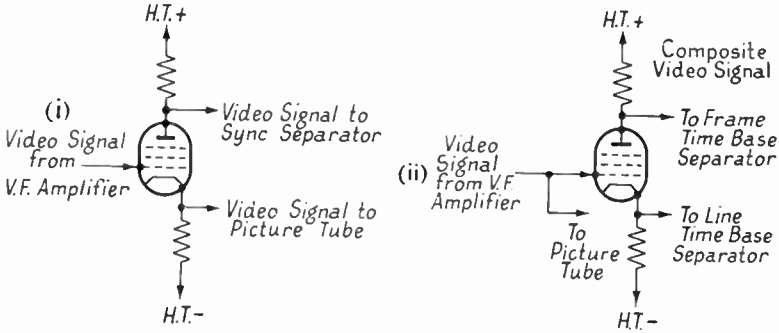

FIG. 5.4E. TWO USES OF CATHODE COUPLING IN THE VIDEO OUTPUT STAGE

separator is buffered from both by taking its input from a small load resistor in the anode circuit of the cathode follower. In the alternative (ii) the cathode follower feeds the synchronizing voltage to one time base from its cathode and the other from a small load inserted in its anode circuit; separate synchronizing signal separators are required, one in each output channel. A further consideration in practical synchronizing circuits is that of polarity. While the time-base generators nearly always require positive pulses for the trigger method of synchronization the signal voltage available at the video amplifier anode may have either polarity depending on whether positive (American system) or negative (British system) modulation is used at the transmitter and on whether the grid or cathode of the tube is used as the modulating electrode (see Chapter VI). Thus when amplification is needed in the synchronizing system it is often required to achieve it without

signal inversion. In such cases the cathode-input stage is usually employed together with a cathode follower (see Fig. 5.4F).

The double-triode valve with cathode coupling is particularly useful in synchronizing circuits. Thus it may be directly coupled to the video amplifier anode to avoid the use of a separate d.c. restorer as a buffer between the two time-base synchronizing channels, as two separators in cascade, or as a non-inverting synchronizing amplifier. Such arrangements are

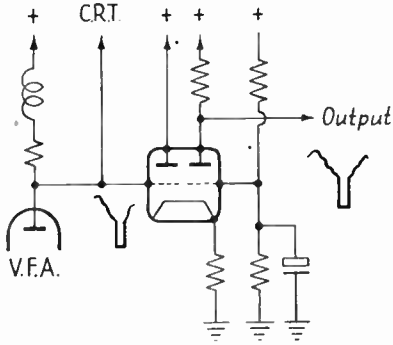

FIG. 5.4F. CATHODE-COUPLED, DOUBLE-TRIODE, NON-INVERTING SYNCHRONIZING AMPLIFIER

rarely used in British practice in which design is seriously restricted by economic considerations but they are found in American circuits.

5.5. Separation of the Line Synchronizing Pulses. It is not possible to separate readily the line synchronizing signal from the complete synchronizing wave, because it runs through the long framing pulse. In practice, however, it has been found possible to achieve satisfactory line synchronizing by using the differentiated version of the complete synchronizing signal. The effect of differentiating the signal is shown for the British case at (i) and for the American signal at (ii) in Fig. 5.5A. The chief results are the conversion of the positive-going step impulses into sharp peaky pulses and the separation of the voltage ranges occupied by the positive- and negative-going pulses as compared with the common voltage range occupied by the original step impulses.

Considering only the positive-going peaky pulses, which are the ones normally used for firing the line time-base generator, it will be noted that the result of introducing the equalizing and framing pulses is to double their repetition rate by introducing a new pulse half-way between existing adjacent pulses.

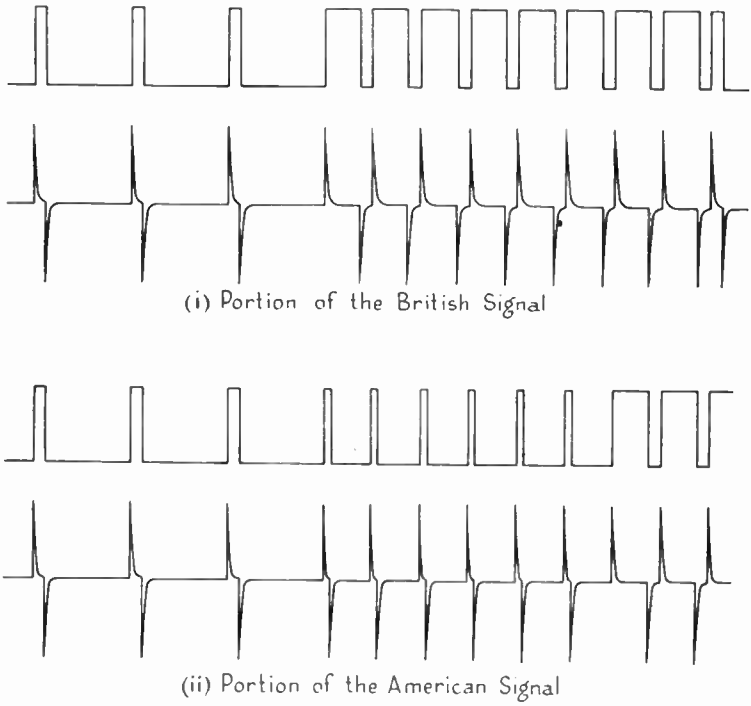

FIG. 5.5A. DIFFERENTIATION OF THE SYNCHRONIZING SIGNAL

If the unsynchronized line time base runs reasonably closely to the required frequency it will lock to the pulses recurring at line repetition rate and ignore the intermediate pulses introduced at the end of each frame, except perhaps when the latter are of excessive amplitude. It is not essential to eliminate the negative-going peaky pulses but the differentiated wave is sometimes fed to the time base through an amplitude filter to remove picture leakage over the synchronizing signal separator and to block interfering signals.

5.6. Separation of the Frame Signal. In both British and American transmissions the framing signal may be regarded as a pulse train of double line frequency and of a few lines duration which is switched in to replace the line synchronizing pulse train once per frame (field).

The fact that this brief pulse train recurs at frame frequency and that it is required to make the time base run at the latter frequency suggests the use of a narrow band-pass filter centred on the frame frequency, and this method was very frequently used in pre-war receivers. It is suitable when flywheel synchronism is required but not when it is desired to use individual steps of the synchronizing wave to time the scanning circuit flyback frame by frame, as in the trigger method, because the restricted frequency response of the filter eliminates almost entirely the step changes in the waveform. On the other hand, interference is correspondingly reduced.

In the majority of circuits trigger synchronization is preferred and the consequent need for preserving the shape of the synchronizing impulses leads to the use of low-pass filter-type networks whose response extends to a frequency well above that of the framing pulse repetition rate. The fact that the width of the framing pulses is considerably greater than that of the line pulses (the ratio of widths is approximately 4 : 1 in the British case and 6 : 1 in the American) makes it possible to distinguish between them by using a suitable pulse width discriminator. In the simplest (and commonest) case this takes the form of the familiar single-section CR integrator. The output obtained from such a network when the input to the integrator is the actual synchronizing signal is shown for both British and American transmissions in Fig. 5.6A. Considering the simpler example, it will be seen that owing to the short duration of the line pulses the output they provide is of very small amplitude and has ample time to return to the starting level. During the framing signal the positive-going pulses are longer than the line pulses and are wider (rather than narrower, as previously) than the serrations between them so that the signal builds up to a larger amplitude during the first

pulse than during a line pulse and continues to increase over subsequent pulses. The line pulse output can easily be eliminated if necessary by a diode gate such as that described for synchronizing signal separation in an earlier section. It is possible to improve discrimination by using two or more *CR* integrating sections in cascade and this is often done, particularly in American circuits. The improvement will be understood

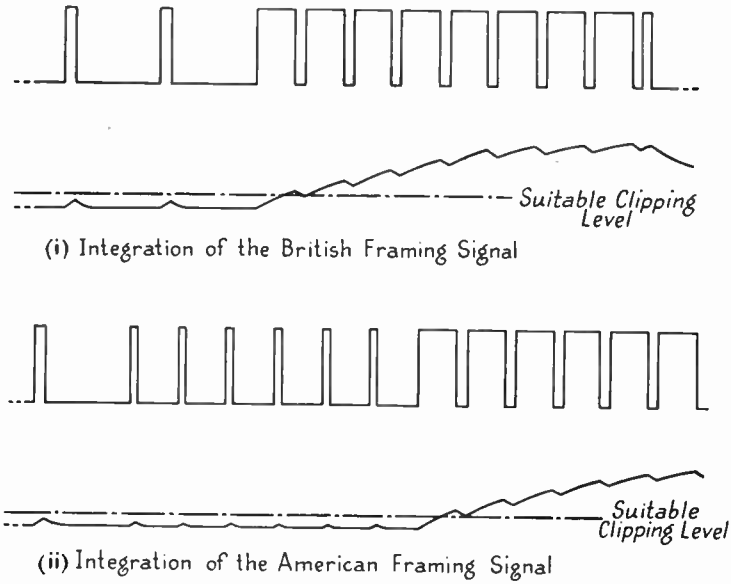

FIG. 5.6A. INTEGRATION OF FRAMING SIGNALS

if the response of two sections to a step impulse is compared with that of one section (see Fig. 5.6B); it will be noted that the initial curvature is upward rather than downward so that up to a point the degree of discrimination increases with pulse width ratio.

The use of the integrator type of shaping network for frame signal separation suffers from the disadvantage of causing almost complete elimination of the step changes in the input waveform, which changes are desirable for precision of timing of the time base generator. While this disadvantage is offset by the H.F. interference filtering property of the network it

has led to the development of circuits which discriminate equally well but without such serious loss of the sharp changes in the applied wave.

One method is to add a differentiated version of the

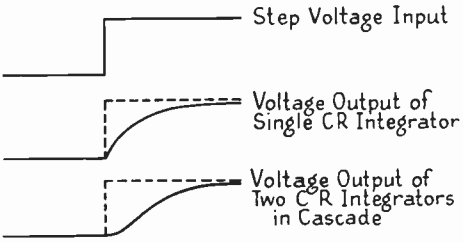

FIG. 5.6B. INTEGRATOR VOLTAGE OUTPUTS

synchronizing signal to the integrated waveform. This can be done without difficulty if a current-operated integrator is employed; a typical example is given in Fig. 5.6C. The parallel *CR* integrator is connected in the anode circuit of a pentode

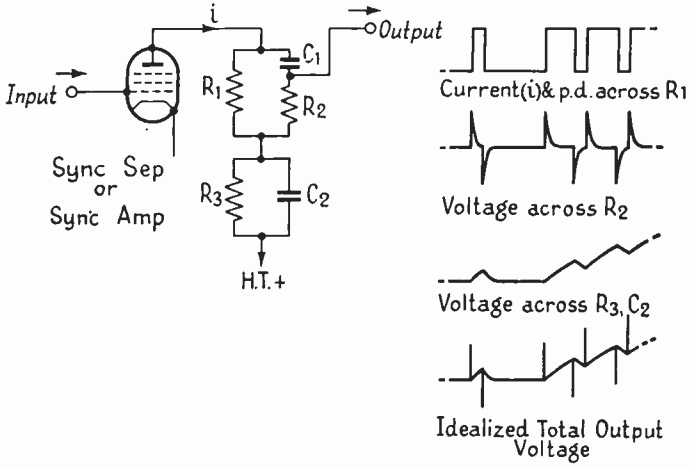

FIG. 5.6C. COMBINATION OF INTEGRATION AND DIFFERENTIATION IN FRAMING SIGNAL SEPARATOR

synchronizing separator and a small resistor is placed in series with it to develop a voltage for operating a differentiating branch. The latter is connected directly across this resistor, and the output is taken from the junction of the differentiator

so that the differentiated signal voltage developed across the differentiating resistor is superimposed on the integrated signal appearing across the parallel CR. The waveforms are tabulated alongside the figure. It would be better to invert the signal before differentiating it, but the resultant circuit is more elaborate because an inverter is needed in the differentiating channel.

One way of restoring the abrupt signal voltage changes in the output of the simple integrator is to associate with the

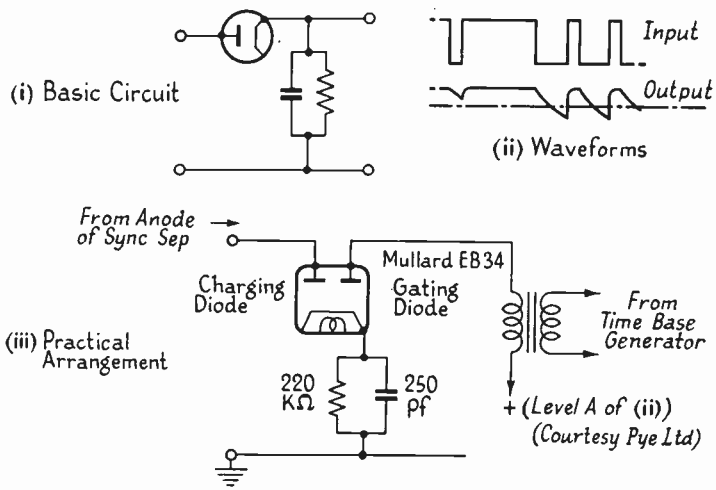

FIG. 5.6D. THE "DOUBLE" TIME-CONSTANT INTEGRATOR FRAMING-SIGNAL SEPARATOR

latter a low-impedance diode so arranged that it is non-conductive during the synchronizing pulses, thus allowing the integrating action to take place during these periods in the manner already described, but is conductive during the intermediate periods. Accordingly a large and rapid change of output occurs at the end of each framing pulse. The basic circuit is shown at (i) in Fig. 5.6D. The synchronizing pulses are negative-going and are fed to a parallel CR system through the diode. During the synchronizing pulses the latter cuts off and allows the parallel CR circuit to discharge to a small extent in the case of the line pulses but to a much lower level when

the framing pulses are applied. At the end of each pulse the diode conducts and rapidly recharges the integrator capacitor. The waveform so produced (ii) differs from that of the simple integrator in two ways; the output does not build up progressively over the entire pulse train and the discharge portions of the waveform are rapid rather than shallow. A typical practical circuit as used by Pye, Ltd. (Chapter VIII) is shown at (iii). The diode providing the short-time-constant recharging circuit is followed by a diode gate so biased that only the framing pulses produce an output. The two diodes are contained in a common envelope and have a common cathode. The output current is fed to the frame time-base oscillator over a differentiating transformer. An adjustable clipping level is provided by putting a variable bias on the anode of the second diode; this bias, the level A of the dotted line in (ii), is tapped from the H.T. supply.

A most effective method of shaping the synchronizing waveform to bring out the framing pulses makes use of the fact that the d.c. component of the framing signal differs considerably from that of the line signal. It was first described by H. A. Fairhurst (British Patent No. 484412) and is used in Murphy receivers.

The change of d.c. component during the framing pulse train (Figs. 5.1A and 5.1B) forms an asymmetrical square wave of frame frequency and the portion of this wave corresponding to the framing period may be picked out by differentiating the entire synchronizing signal in a CR network of time constant approximately equal to the period of one framing pulse as shown, together with the basic circuit, in Fig. 5.6E. An important feature of this method is the retention of the sharp edges of the synchronizing signal. In effect the exponential voltage change caused by differentiation forms a rising pedestal for the pulses formed by the frame signal serrations and the latter are used for triggering the time base.

All the circuits so far described need a large amplitude signal for operating the shaping CR circuit and should be followed by some form of amplitude filter to eliminate the residual line

signal. The time constant of the basic shaping CR circuit is, in all cases, of the order of half the line period.

A less common but most effective frame signal separator

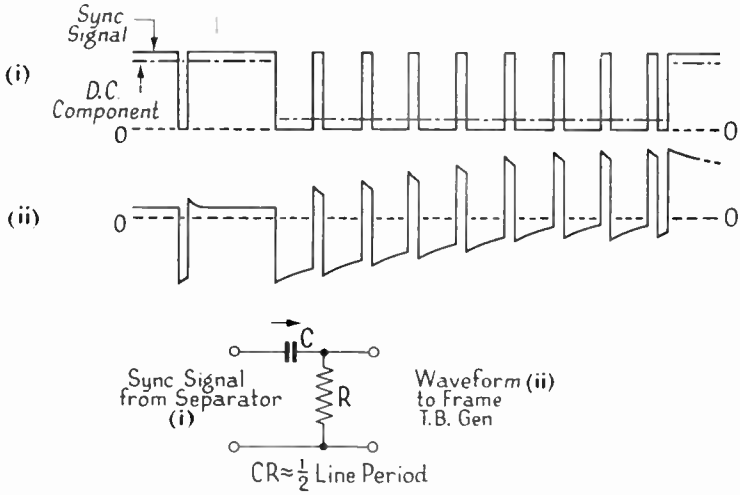

FIG. 5.6E. PARTIAL DIFFERENTIATION OF THE FRAMING SIGNAL

uses the synchronizing pulses to shock-excite and control oscillations in a resonant circuit.* An example is given in Fig. 5.6F. A parallel LC circuit tuned to a frequency whose half period approximates the duration of the serration between

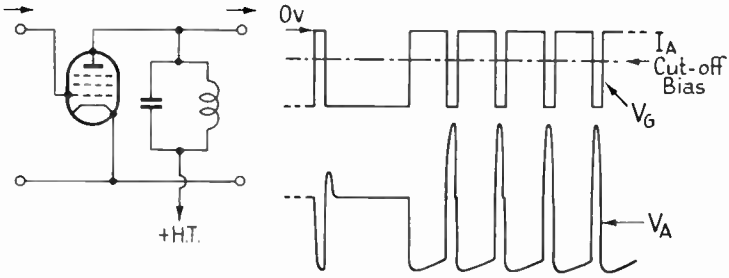

FIG. 5.6F. RESONANT FRAMING SIGNAL SHAPER

successive framing pulses is connected in the anode circuit of a valve supplied with the synchronizing signal at its grid. Each time a step change occurs in this signal the sudden

* E. L. C. White, British Patent No. 505764.

change of anode current tends to send the anode circuit into oscillation at its natural frequency. While the changes due to negative-going changes of input cut the valve off and allow the anode circuit to oscillate freely, the reverse grid changes bring on heavy anode current and the valve provides severe damping on the tuned circuit. The resultant anode waveform is shown in the figure. The large first half-cycle of the little-damped oscillations coincides with the framing signal serrations and provides suitable pulses for correctly timing the frame oscillator.

There are more advanced and more effective methods of separation than those described but they are not, as yet, employed in commercial receivers. A very complete account of the circuit technique has been given by the author in a paper entitled *Frame Time-Base Synchronization.*[5]

In the foregoing no mention has been made of the conditions required for correct interlacing. It will have been noticed that the framing signal provides a series of pulses at half-line intervals and successive pulses do not differ considerably in amplitude, so that the time base may not always trigger from corresponding pulses in successive framing signals, particularly if the synchronizing signal is accompanied by interference. Ideally the first framing pulse should trigger the time base every time so that ample time is allowed for the flyback and this condition can be obtained by careful design of the separator and its associated circuits.[4, 5, 6]

5.7. Automatic Frequency and Phase Control. The method of automatically controlling the frequency and phase of the time-base oscillator, which is becoming very common in American receivers, is best understood by consideration of a typical example. An R.C.A. circuit is shown in Fig. 5.7A.

To be fully effective and to take full advantage of the fly-wheel property, the time-base generator should be a stable form of oscillator, hence the relaxation types of sawtooth oscillator described in the last chapter are not very suitable. The normal method of converting the basic sawtooth generator into a stable source is to use the output of a stable sinusoidal

oscillator to trigger the hard discharge valve instead of arranging feedback in the latter in order to make it self-running. In the example given a 6K6GT beam tetrode is arranged in the cathode-coupled form of Hartley oscillator to produce a stable line-frequency oscillation. The amplitude of the sinusoidal voltage developed between the top of the inductor and

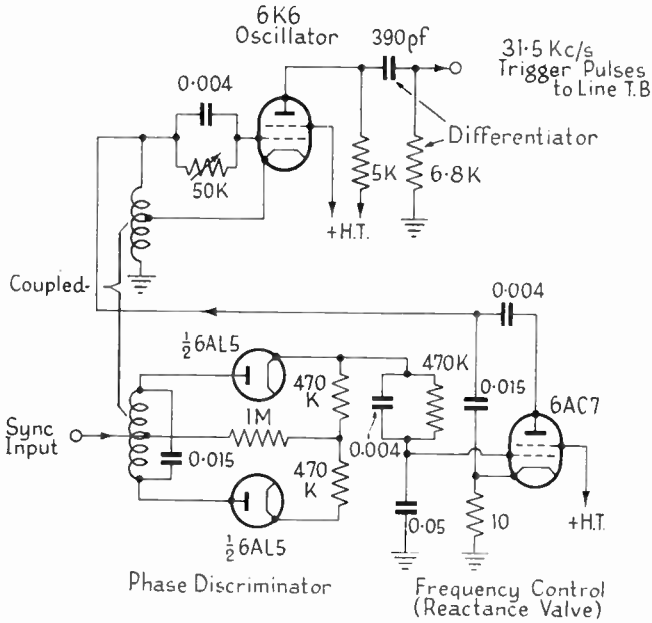

FIG. 5.7A. CIRCUIT FOR AUTOMATIC CONTROL OF LINE TIME-BASE SYNCHRONISM

(Courtesy of R.C.A., Ltd.)

the centre tap is of the order of 100 V peak-to-peak, which is considerably greater than the grid base of the valve, and the parallel *CR* circuit of long time constant inserted in the grid lead develops such a large negative bias that only the peaks of each positive half-cycle of the voltage fed to the grid allow anode current to flow. Moreover, sufficient grid current flows at the extreme tips of the positive half-cycles of input voltage to cause clipping. The overall result is that an approximately square anode current pulse of duration about one-twentieth of the oscillation period flows at the peak of each positive

half-cycle of the input. The square negative voltage pulses developed at the anode of the oscillator by the insertion of the resistive anode load are differentiated in the coupling *CR* filter to the discharge valve grid and the latter is so adjusted that it fires on each positive peaky pulse from the differentiator.

THE REACTANCE CONTROL VALVE. Control of the oscillator valve is achieved by the use of a "reactance" valve of the kind used in A.F.C. systems; its principle of operation will be clear

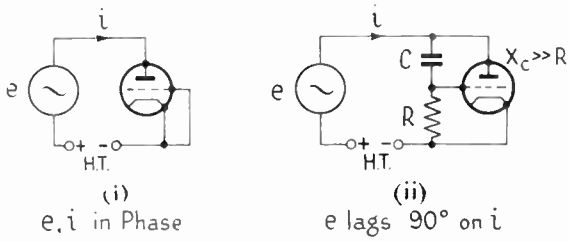

FIG. 5.7B. BASIC CIRCUIT OF A FORM OF VALVE REACTANCE

from Fig. 5.7B. At (i) an a.c. generator is inserted in the anode circuit of a valve supplied with suitable direct-operating potentials; the resultant alternating fluctuations are in phase with the injected voltage, and, to the a.c. source, the valve and its associated circuit appear as a pure resistance. At (ii) a potentiometer ("quadrature network") is arranged to tap off a portion of the applied alternating voltage and apply it between grid and cathode of the valve, but with a phase advance of very nearly 90° which is obtained by using a capacitor in the upper arm of the potentiometer and a resistor in the lower arm* and choosing values sufficiently small to make the time constant small compared with the period of the applied voltage. Since the effect of the grid on the amplitude of the a.c. component of the anode current is far greater than that of the anode itself, the result of adding the phase shift potentiometer is to make the valve pass an alternating current (superimposed on the steady feed current) substantially 90° ahead of the applied voltage. Accordingly, the valve is equivalent to a capacitance from the point of view of the a.c. generator. If

* *C*, *R* may be transposed to obtain inductance, or cathode input employed.

the frequency-determining tuned circuit of a sinusoidal oscillator is used as the source of applied a.c. voltage the "reactance" of the valve will be thrown across it and will modify the oscillation frequency. The practical value of this arrangement is the possibility of voltage control over the phase and frequency of the oscillator, for if the effective mutual conductance (i.e. signal-current output/signal-voltage input for a given set of mean operating electrode potentials) is varied the magnitude of the reactance presented by the valve and the consequent oscillator frequency shift will change correspondingly.[7]

THE PHASE DISCRIMINATOR. A control voltage suitable for the present purpose is obtained by comparing the phase of the oscillator output with that of the received synchronizing pulses in a conventional discriminator circuit, again of the type frequently encountered in A.F.C. systems. Two diodes each having a resistive cathode load are connected, at their anodes, to the ends of a winding coupled to the tuning inductor of the oscillator, and a common load impedance is provided to the synchronizing pulse signal injected through a blocking capacitor to the centre tap of the winding, by connecting the latter to the junction of the two cathode loads through a resistor. Assuming symmetrical arrangement of the transformer and the associated diode circuits it will be clear that equal mean direct potentials will appear across the cathode loads as a result of rectification of the voltage injected by the transformer. It will be noted that the two outputs, while of equal magnitudes, have opposite polarities, so that the total voltage developed across the loads will be zero regardless of the amplitude of the injected oscillatory voltage. In the absence of synchronizing pulses the oscillator is manually adjusted to the required frequency. When the pulses are applied (positive-going) they will slightly increase the mean diode currents and the change will not, in general, be the same in both cases. In fact, consideration of actual cases will show that the resultant change in the total (cathode-to-cathode) output voltage will correspond in magnitude and phase to the phase difference between the two signals. Accordingly this error voltage may be used to

control the oscillator through its reactive control valve, in such a manner that the error tends to zero. In the present example the polarity of the output is suitable for direct application to the control valve grid but needs to be altered to eliminate all variations (including spurious interfering signals, if present) and a simple integrator is used for this purpose.[8]

AUTOMATIC CONTROL OF THE SAWTOOTH OSCILLATOR. It should be mentioned that while the use of a valve reactance-controlled stable sinusoidal oscillator is desirable in automatic

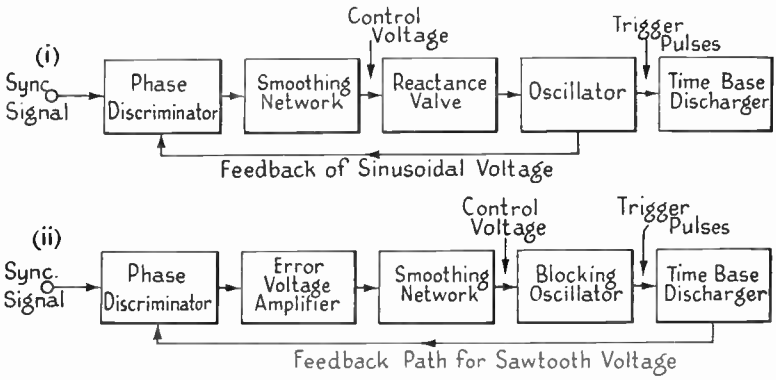

FIG. 5.7c. COMPARATIVE SCHEMATICS OF CIRCUITS FOR AUTOMATIC PHASE AND FREQUENCY CONTROL OF A TIME BASE

(i) Wright's circuit (Reference 10).
(ii) Wendt and Fredenhall's circuit (Reference 9).

hold circuits of the kind just described, it is possible to apply the method to oscillators of the relaxation type which have the advantage over the more stable type of allowing direct control by the error voltage without the need of a reactance valve, although the latter voltage may need amplification. Again, the sinusoidal input is not essential to the satisfactory operation of the phase detector circuit and a sawtooth waveform may equally well be used. The schematic of a typical circuit (R.C.A.) is given in Fig. 5.7c, alongside that of the arrangement already described. Except for minor circuit differences the discriminator circuit is similar to, and functions in the same manner as, the earlier example. The error voltage is amplified, and smoothed in the anode circuit of the amplifier

by a current-operated *CR* circuit of long time constant before being directly coupled to the discharge valve (a conventional blocking oscillator) grid. In the equilibrium condition the frame synchronizing pulse train centres on the flyback stroke of the sawtooth wave derived from the time base.[9, 10]

Circuits of this kind are of particular advantage in metropolitan areas where the heavy prevailing level of man-made static makes achievement of consistently satisfactory synchronism very difficult by simpler circuit technique. It should be mentioned that circuits of the type shown in Fig. 5.7A were used for various purposes in military radar equipments during the war under the name "recurrence frequency selectors."

BIBLIOGRAPHY

(1) BINGLEY, F. J. The Problem of Synchronization in Cathode-ray Television. *P.I.R.E.* Nov. (1938) 1327.

(2) FINK, D. G. *Television Standards and Practice*, Ch. IX. McGraw-Hill (1943).

(3) PUCKLE, O. S. *Time Bases*, Ch. IX. Chapman & Hall (1943).

(4) FINK, D. G. *Principles of Television Engineering*. McGraw-Hill (1940) 156–164.

(5) KEEN, A. W. Frame Time Base Synchronization. *J.T.S.* June (1947) 49.

Frame Synchronizing Signal Separators. *E.E.* Jan. (1949) 3.

(6) COCKING, W. T. Interlacing. *W.W.* Apr. (1947) 124.

(7) SABAROFF, S. Frequency Controlled Oscillators. *C.* Feb. (1939) 7.

(8) FOSTER, D. E., and SEELEY, S. W. Automatic Tuning, Simplified Circuits, and Design Practice. *P.I.R.E.* March (1937) 289.

(9) WENDT, K. R., and FREDENHALL, G. L. Automatic Frequency and Phase Control of Synchronization in Television Receivers. *P.I.R.E.* Jan. (1943) 7.

(10) WRIGHT, A. Automatic Frequency-phase Control in TV Receivers. *T.T.* Feb. (1947) 74.

CHAPTER VI

THE VIDEO SIGNAL CIRCUITS

THOSE receiver sections with no broadcast-set equivalents have now been dealt with. There remain the signal circuits, where the main requirement—wide-band amplification—arises at each stage, and so the whole video signal chain is studied in this chapter.

6.1. Specification of the Radio-frequency Signal. The very wide frequency band required to convey the signal representing a high-definition television picture, and the need for a correspondingly high carrier frequency well clear of existing broadcast services, has led to the choice of ultra-high bands of radio frequencies for television transmission. In the British transmission from Alexandra Palace (North London), the vision signal is carried on 45 Mc/s and the sound accompaniment on 41·5 Mc/s. In the U.S.A. a number of channels have been allocated for television transmission extending from 44 Mc/s to 216 Mc/s. In both countries amplitude modulation has been adopted for the video signal in order to ease the modulation problem at the transmitter and to minimize the band of frequencies occupied by the resultant R.F. signal. It is not essential to transmit both sidebands, but this is done in the British case (see (i) in Fig. 6.1A) in order not to restrict receiver design or to increase the receiver alignment problem. When the American standards were formulated a form of vestigial single-sideband transmission was preferred. In this method the lower sideband is transmitted at full amplitude up to a minimum of 0·75 Mc/s and then rapidly attenuated so that at 1·25 Mc/s below the carrier the sideband is practically extinguished. The overall curve of the transmitter output is shown at (ii) in Fig. 6.1A. This form of transmission allows the receiver response to be reduced linearly to zero with the response to the carrier occurring at half-amplitude, as shown

by the chain line in the figure. This form of transmission avoids the difficulty of achieving sharp cut-off in the transmitter. The chief advantages of single-sideband working are, of course, saving of power at the transmitter and narrowing of the

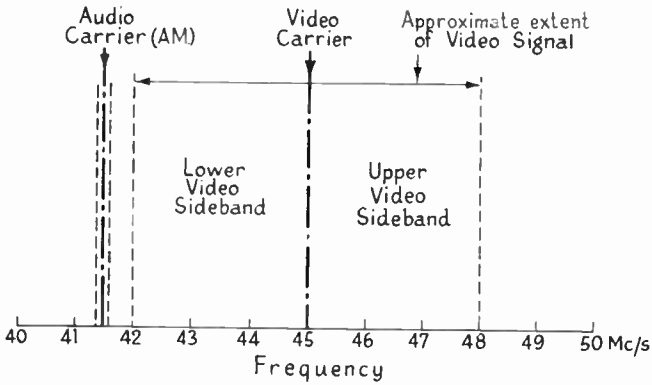

(i) The British Signal

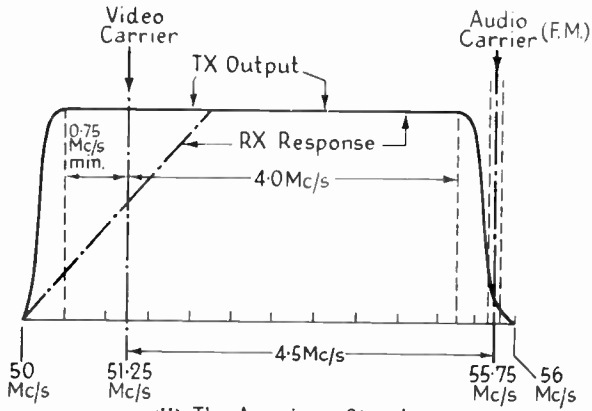

(ii) The American Signal

FIG. 6.1A. THE R.F. SIGNAL SPECTRUM

necessary acceptance bandwidth of the receiver; the latter aspect will be discussed more fully in a later section (p. 193).

6.2. The Essential Processes of Signal Reception. The essential processes occurring in the television receiver between the pick-up of the R.F. signal by the aerial system and the modulation of the picture tube by the video signal are the same

as in the corresponding type of broadcast receiver. Some degree of amplification at carrier frequency is followed either by frequency change and I.F. amplification or by further R.F. amplification before the signal is demodulated. The former (superheterodyne) method is invariably employed where two or more stations may be received, as in certain cities of the U.S.A., and has advantages even for single-station reception, but the alternative method ("straight") is usually preferred in the latter case. It is advantageous, as will be explained in a later section, to employ a certain amount of V.F. amplification before the demodulated signal is applied to the picture tube grid. The direct component of the detector output must be passed on to the grid, however, or adequately re-established between grid and cathode since it represents an essential part of the signal. In some American designs automatic gain control is used, and in a similar manner to automatic volume control in normal broadcast receivers. It is more important to provide some means of protection against interference produced by car ignition systems, and such "spotter" circuits are frequently incorporated in the video circuit of British receivers.

6.3. General Design of the Signal Circuit System. In America the choice between the superheterodyne and tuned radio-frequency methods of reception has been determined in favour of the former by the intention of setting up a large number of transmitting stations and by the allocation of television channels extending up to a carrier frequency greater than 200 Mc/s. Where more than one station is to be received and the carrier frequency is well above 50 Mc/s the advantages of the superheterodyne far outweigh those of the straight receiver. In the British case the existence of only one station operating at a frequency well within the capabilities of normal amplifier valves makes the simpler method of reception worth while, although superheterodyne circuits are frequently used, the extra cost of the frequency-changing stage being offset by improved stability and greater ease in achieving the desired gain and bandwidth while suppressing the sound transmission.

The present trend in British receivers is toward straight circuits using the improved U.H.F. amplifying valve developed for radar receivers, together with single-sideband working.

The allocation of the required overall gain between the various portions of the complete (aerial to cathode-ray tube) signal chain depends on various factors. The peak-to-peak amplitude of video signal required to modulate the picture tube fully is of the order 30–50 V (including the synchronizing pulses) so that if the tube grid were fed directly from the demodulator the final R.F. (or I.F.) amplifier would have to provide considerably more than twice this amplitude, which output would be difficult to obtain without distortion in a stage of reasonably normal design. It is better to handle the signal when it occurs at the greatest required amplitude in a post-demodulator circuit, since the latter inevitably halves the peak-to-peak amplitude of the signal in the demodulation process. The demodulator must, however, be provided with as large an R.F. signal as is conveniently possible (at least 5 V amplitude) in order to swamp the initial square-law curvature of its input-output characteristic.

The total maximum gain of the receiver is normally of the order of 500,000. In a single-sideband T.R.F. circuit this figure may be achieved in four stages if modern type amplifying valves are employed. With double-sideband working and/or less efficient valves, up to six stages may be necessary. In either case the use of frequency conversion to a lower frequency enables the total number of amplifying stages to be reduced, but at the cost of the additional converter, although the latter may be made common to both video- and audio-signal chains. With this general outline of the complete vision signal receiving chain in mind it will be possible to continue the detailed stage-by-stage description working backward, as hitherto, from the picture tube to the aerial.

6.4. The Video-frequency Amplifier. The advantage of operating the demodulator at a high signal amplitude limits the amount of gain required of the video amplifier to from five to ten times, but higher gains may be required if it is desired

to operate certain types of spotter circuit or to provide an adequate signal for holding synchronism down to very low levels of received signal strength.

The principal features of the video amplifier are the circuit refinements introduced to maintain the frequency response up

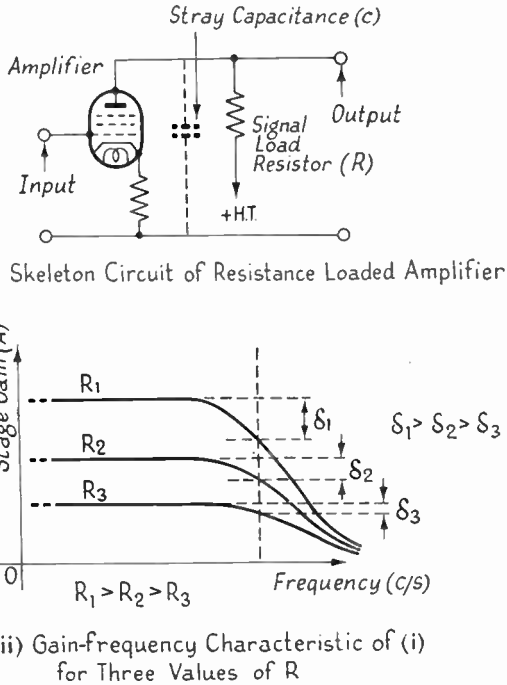

FIG. 6.4A. GAIN-FREQUENCY CHARACTERISTICS FOR A RESISTANCE-LOADED AMPLIFIER

to the absolute minimum of 2·5 Mc/s. Of the well-known methods of amplifier loading and coupling available, all the tuned varieties are out of the question in view of the wide frequency band required; only the simple resistive load provides a useful basis and even this requires modification and careful application.

THE BASIC RESISTANCE-LOADED AMPLIFIER. Recalling the basic circuit (reproduced at (i) in Fig. 6.4A) it will be remembered that stray capacitance due to the output capacitance of

the valve, the input capacitance of the following circuit, and self capacitances of the anode load components added together are sufficient to effectively by-pass the load resistor when the signal frequency rises to a high value. The resultant falling off in high-frequency response, as illustrated by (ii), is a serious problem even in the better-class audio-frequency amplifier, and therefore becomes acute in television circuits where the maximum modulation frequency requiring amplification is at least (say) $\frac{2{\cdot}5 \text{ Mc/s}}{12{\cdot}5 \text{ kc/s}} = 200$ times as great. The only effective way of approaching this considerably extended frequency response is, having taken the obvious course of minimizing stray capacitance, to reduce the load resistor to a value far less than would be employed in an A.F. circuit. Without the use of a valve especially designed to meet this problem and without one or more of the methods of load compensation to be described later, the load resistor would have to be as low as 1 kΩ to 2 kΩ and the stage gain would be but a few times. As a result of using such a small load the signal frequency will have to rise to a much higher value than before to reduce the effective load impedance to any given proportion of its nominal or low-frequency value (i.e. the actual load resistor value). The improvement obtained by progressive reduction of R is shown for three cases at (ii) in the figure. The cost of the improvement is, of course, a drop in the reference level representing the ideal (flat) frequency response, i.e. a loss of stage gain, since the latter is given to a first approximation for a high-impedance value by $A = gR$, where g = mutual conductance of the value, so that A is directly proportional to R.

Special V.F. amplifying valves (e.g. Mazda 6F13 and U.S.A. 6K6) having a high ratio of mutual conductance to output capacitance, together with a large permissible anode current swing, have been developed to make it possible to achieve satisfactory gains (10 to 20 times) even when R is reduced to the very low value required (see Appendix I (§ A1.7)).

H.F. Compensation. Even better performance can easily be obtained by one of many possible methods of using one or

more compensating inductors. Very roughly, the basic idea underlying these correcting circuits is that of eliminating the effect of the stray capacitance by adding a neutralizing inductance, i.e. by "tuning" it out at a frequency in the region of the highest needing amplification. When the amplifier load consists of R and C in parallel the gain falls progressively from its value at zero frequency to $\sqrt{\frac{1}{2}} = 0{\cdot}707$ of this value at a frequency given by $1/(2\pi CR)$. As this drop corresponds to -3 db, which is conventionally taken as the measure of bandwidth, this "cut-off" frequency is also the numerical value of the load bandwidth. If now an inductor L is placed in parallel with the load RC the frequency giving maximum gain shifts from zero to the resonant frequency of the load, which is given by $1/(2\pi\sqrt{(LC)})$, and the time constant CR now determines the two frequencies, one above, the other below the resonant frequency, at which the response drops to the fraction $1/\sqrt{2}$ of the gain at the resonant frequency. At the latter frequency the effects of L and C cancel and the load effectively reduces to R alone; the gain at resonance is therefore proportional to R and as the latter is raised the rise in maximum gain is accompanied by a reduction in bandwidth, since the latter is inversely proportional to the time constant CR. The gain/frequency curves for three widely different cases, which should be compared with the gain/frequency curves for a resistance-loaded amplifier, given in Fig. 6.4A, where similar R values are used, are shown in Fig. 6.4B.

It will be possible now to understand clearly the method of forming a useful compensated load, for while neither of the two types of load just discussed is suitable alone for the present purpose, they may be combined to produce a much better approximation to the required result. It is only necessary to add a small compensating inductance in series with the load resistor of Fig. 6.4A. The load remains effectively resistive only at very low frequencies, since the reactance of the parallel stray capacitance is very high and that of the series compensating inductor very low. As frequency is raised, however, the two reactances become more nearly equal until the resonant

condition is reached at the maximum frequency it is desired to amplify, at which frequency the load impedance is the same as at zero frequency, i.e. R. While the value of the LC product alone fixes the resonant frequency it is the CR product which decides the shape of the response curve, particularly in the regions approaching and beyond the resonant frequency. The stray capacitance C being common to both products is the

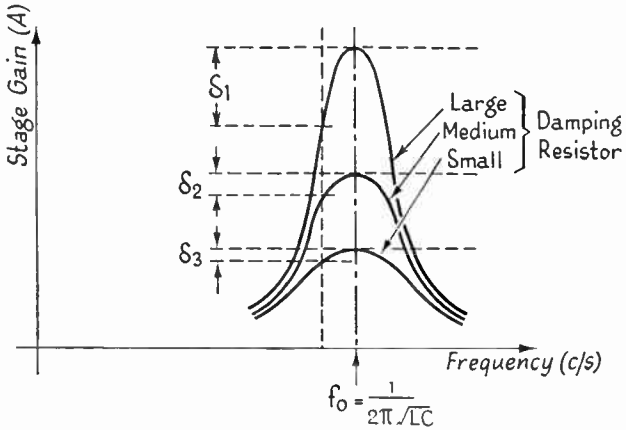

FIG. 6.4B. FORM OF CHARACTERISTIC GAIN-FREQUENCY CURVE FOR A TUNED-ANODE CIRCUIT (C, L AND R IN PARALLEL) AMPLIFIER FOR THREE VALUES OF R

controlling factor and must be reduced to an absolute minimum to allow maximum freedom of design (see Fig. 6.4C).*

COUPLING NETWORKS. The method of compensation just described can be extended by the addition of further reactive elements to form additional resonant circuits and is a particular case of a method (cf. "staggered tuning," § 6.7) of achieving large bandwidth which is also applied to R.F. amplifiers, as will be shown in a later section of this chapter. In the above case the simple resistance load, together with the associated stray capacitance, may be regarded as a special case of the form of the tuned (R, L and C in parallel) compensating load, i.e. it can be regarded as a resonant circuit tuned to zero frequency. The complete compensated load therefore consists

* See Appendix I (§ A 1.6).

of two tuned circuits whose resonant frequencies are separated by approximately the desired bandwidth and which are damped sufficiently to keep the intermediate response within, say, 3 db of that occurring at the resonances.* Theoretically the method could be extended indefinitely by further subdividing the basic load and further addition of compensating inductors having inductance values so chosen that the additional frequencies of "anti-resonance" (i.e. parallel resonance) are

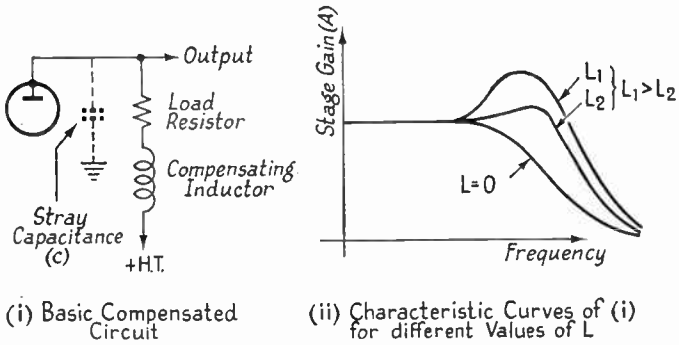

FIG. 6.4c. THE INDUCTANCE-COMPENSATED AMPLIFIER

suitably spaced over the desired frequency band. By a well-known circuit theorem the resultant chain of series-connected parallel-tuned (rejector) circuits can, with appropriate change of component values, be replaced by a chain of parallel-connected series-tuned (acceptor) circuits.

In the load forms so far discussed the entire arrangement has in all cases been of the two-terminal type (with one terminal connected to the anode of the amplifier and the other to H.T.) and both the output impedance of the amplifier valve and the input impedance of the following stage have been effectively directly in parallel with the load. It has been shown that the total value of this lumped stray capacitance has decided directly or indirectly not only the amount of gain obtainable for a given bandwidth but also the shape of the response curve and particularly the final rapidity of cut-off. Accordingly, load

* A pronounced dip, as between the peaks of the response of a bandpass transformer, may occur if the values are incorrectly chosen.

and coupling circuits have been devised in which the two valve capacitances forming the greater part of the total stray capacitance are effectively separated by the insertion of an inductance between the amplifier anode and the following grid, as shown in Fig. 6.4D. This is the simplest example of a class of "four-terminal" networks which have been developed on the basis of general network theory which is beyond the scope of the present treatment; in any case, owing to economic limitations loads and associated couplings are very rarely more

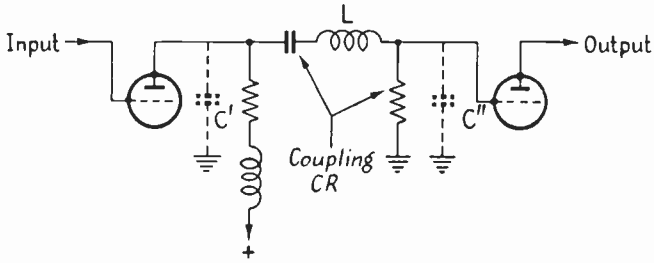

FIG. 6.4D. AN IMPROVED COMPENSATED COUPLING NETWORK
An additional L separates the stray capacitance into two portions, C' and C''.

advanced than those described in the foregoing and the arrangement shown in Fig. 6.4C is used almost exclusively in television receivers.[1, 2, 3]

PHASE AND TRANSIENT RESPONSE. It will be clear from Chapter II that distortionless amplification of a wave requires not only a horizontal gain versus frequency characteristic but also a phase shift versus frequency characteristic which rises linearly with frequency so that all component frequencies of the wave suffer the same time delay in traversing the amplifier and consequently remain in the same relative positions with respect to the time axis. In the building up of the ideal amplifier load from the point of view of the gain versus frequency curve no consideration was given to the question of phase shift. The more advanced treatments of circuit theory show that there is an intimate relationship between frequency and phase distortion, so that, in general, precautions taken to maintain constancy of the frequency characteristic are also beneficial to the phase response. The most important practical point in

the present case is that the drop in response immediately beyond the resonant frequency of the correcting circuit must not be rapid, otherwise a rapid change occurs in the phase characteristic also. The characteristics of the simple corrected load of Fig. 6.4c show that wL/R (taken at resonance) should be about 0·75 for the most level gain characteristic and 0·6 for the optimum phase response.*

A more direct insight into the effect of the amplifier on the shape of the signal being handled can be obtained by considering its response to a step-shaped input voltage change. The load

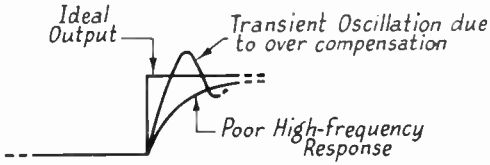

FIG. 6.4E. V.F. AMPLIFIER OUTPUT FOR STEP INPUT VOLTAGE

resistor may be regarded as a damping element in the tuned circuit formed by the compensating inductor and the total stray capacitance. If load resistance is relatively small, this resonant circuit may be set into oscillation by the sharp change of input and the resultant "ringing" will be most noticeable on the picture, particularly at a point where a vertical transition from black to white occurs. This effect has been used to obtain a sharpening of the edges of objects in the picture and thereby provide an artificial method of improving apparent definition, but in good design the circuit should be operated well within the limit at which ringing commences. The response of a video amplifier to a step input is shown for two extreme conditions in Fig. 6.4E. Better-class receivers are given such a check during the test procedure; the test waveform is supplied by a multivibrator and the response displayed on a cathode-ray oscilloscope.[4, 5]

PRACTICAL V.F. CIRCUIT FEATURES. The V.F. amplifier is invariably coupled directly to the detector, otherwise the loss of the direct component of the output would double the total

* F. E. Terman, *Radio Engineers' Handbook*, p. 147.

voltage *range* occupied by the signal. It is essential to include some method of filtering off the R.F. component of the detector output and very often small R.F. chokes are inserted in both grid and/or anode leads of the V.F. amplifier to make use of the filtering effect of the grid-cathode and/or anode-cathode interelectrode capacitances respectively.

The correct operating conditions of the V.F. valve are shown in Fig. 6.4F. There are two possibilities, depending on

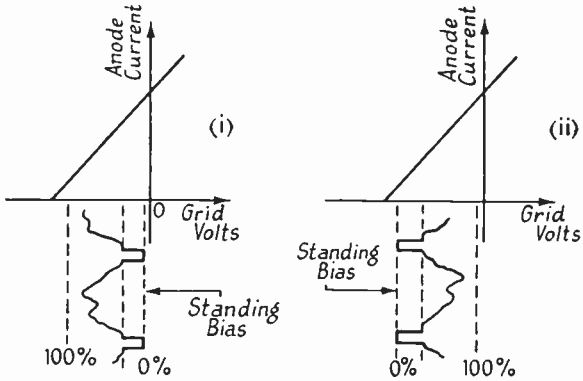

FIG. 6.4F. ALTERNATIVE OPERATING CONDITIONS FOR THE VIDEO AMPLIFIER

the method of picture signal modulation (positive or negative) and on the choice of grid or cathode as the modulating electrode in the picture tube. Both methods of working are employed in British receivers but in U.S. circuits grid drive of the cathode-ray tube is usually preferred. The deciding factor is very often the polarity preferred by the synchronizing separator. With negative-going picture modulation at the video-amplifier grid only a small cathode bias resistor is used and negligible negative feedback occurs. With positive-going picture signal the valve must be biased back to the bottom bend of its characteristic and the resultant feedback may be sufficient to justify the use of a smoothing capacitor across the bias resistor. The resultant drop in gain at low frequencies can be compensated by correct choice of the decoupling *CR* system in the anode circuit, since this circuit provides increasing gain as frequency falls. If a

CR coupling to the C.R.T. grid is used the resultant attenuation of low frequencies may be compensated in a similar manner, or the coupling circuit itself may be compensated (see Fig.

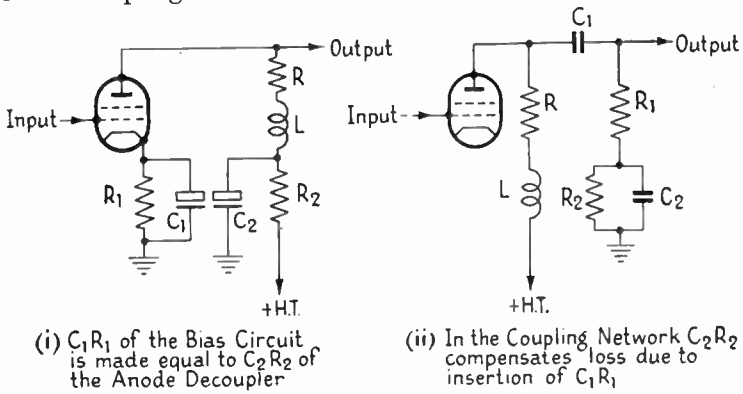

FIG. 6.4G. LOW-FREQUENCY COMPENSATION OF THE VIDEO AMPLIFIER

6.4G). Direct coupling to the cathode-ray tube avoids the use of a d.c. restorer but the cathode should be driven rather than the grid so that in the event of failure of the video-amplifier anode current the cathode-ray tube is given a large negative rather than positive bias (Fig. 3.3B). The screen grid is given a high positive potential and is often separately decoupled.

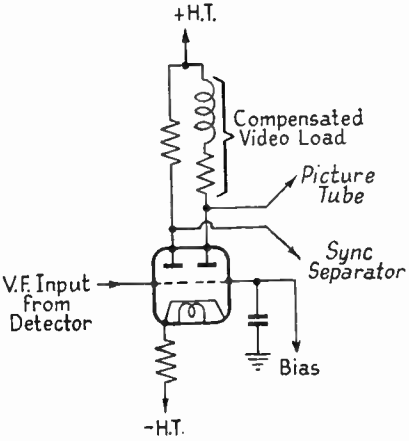

FIG. 6.4H. CATHODE-COUPLED, DOUBLE-TRIODE V.F. OUTPUT STAGE

Unless a separate amplifier is permissible the detector output is insufficient to operate the synchronizing separator and the latter must be fed by the V.F. stage. Direct loading of the anode circuit can be avoided by feeding one or more of the various loads (C.R.T. synchronizing circuits, and spotter) through a cathode follower. Alternatively the synchronizing circuits may be fed from the

cathode of the V.F. amplifier and the input circuit operated "bootstrap" fashion to provide sufficient output from the cathode (Fig. 8.5c). A very satisfactory output system is provided by the use of two cathode-coupled valves (possibly two triodes in a common envelope); the skeleton circuit is shown in Fig. 6.4H. The anti-phase relationship between the two anode currents cancels negative feedback from the common

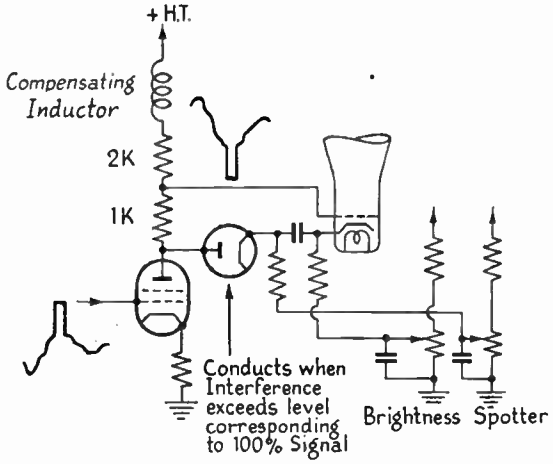

FIG. 6.5A. TYPICAL ANTI-IGNITION INTERFERENCE ("SPOTTER") CIRCUIT
(*Courtesy of Sobell Industries, Ltd.*)

cathode load. One anode feeds the signal electrode of the cathode-ray tube and the other supplies the synchronizing circuits.[6, 7]

6.5. Anti-ignition Interference ("Spotter") Circuits. Very objectionable interference with television reception is caused by the ignition system of motor vehicles; it appears as nearly horizontal streams of randomly distributed spots (white in the British case). Its effect can be reduced to some extent by adding a diode limiter of the type used for synchronizing separation (Chapter V), set to clip off all spurious signals occupying the voltage range beyond the level corresponding to 100 per cent modulation of the television signal. A more effective method uses the diode as a gate to pass on such excess voltage to the tube in such a manner that it operates against

the normal modulation, i.e. it demodulates the beam. Thus, if the picture signal is fed to the C.R.T. grid the excess voltage passed by the diode would be applied to the cathode. A typical circuit is shown at Fig. 6.5A. The additional diode is biased at its cathode by a potential derived from a potentiometer connected across the H.T. supply so that the signal applied to its anode must rise above peak white (i.e. 100 per cent modulation) before the diode conducts.

6.6. The Detector Circuit. Any of the normal detector circuits employed in broadcast receivers may be adapted for demodulation of the signal in a video receiver, although, as in the broadcast case a diode circuit is almost invariably employed. The important points to be considered in the choice of the circuit arise, by comparison with the ordinary receiver, from—

(*a*) the higher carrier frequency, which calls for care in minimizing stray reactances, particularly the parallel capacitance (e.g. anode to cathode in the diode) of the rectifier element;

(*b*) the wider band occupied by the modulation, which requires far greater care in the choice of the load circuit and its component values;

(*c*) the lower carrier to maximum modulation frequency, particularly when a superhet circuit is employed, which makes filtering of the radio or intermediate-frequency component of the detector output more difficult;

(*d*) the need for passing on the d.c. component of the demodulated signal.

The significance of these points will be understood from a consideration of the basic circuit of a single-diode circuit, as shown in Fig. 6.6.A. The modulated radio- (or intermediate-) frequency voltage fed into the detector circuit over the transformer from the final amplifier appears across the tuned secondary L_1C_1, and is applied to the diode valve, V, and its cathode load R_1C_2. During the first few cycles the current pulses drawn through the diode by the positive-going half-cycles charge C_2 to a potential difference nearly equal to the

peak value of the input voltage so that only the peaks of these half-cycles subsequently draw anode current. While R_1 is large enough to prevent C_2 from discharging appreciably between successive charging current pulses, it is not too large to prevent the mean rectified voltage from following the envelope of the modulated input voltage. It will be clear that the mean output voltage for a given R.F. input amplitude will approach the latter value more closely as the ratio of diode resistance to load resistance decreases. But the far greater value of the highest

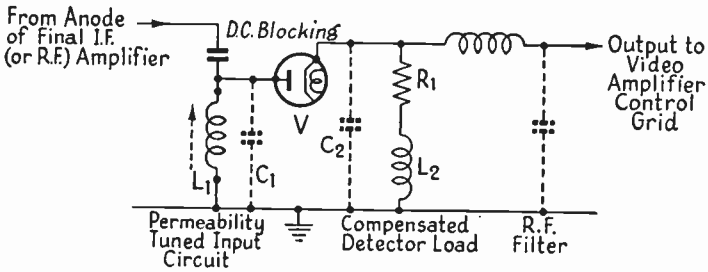

FIG. 6.6A. TYPICAL DETECTOR CIRCUIT

modulation frequency contained in the television signal compared with that of a sound broadcast signal requires R_1 to be correspondingly lower in order that the time constant R_1C_2 shall not be too large to allow the output voltage to follow the R.F. signal envelope. The possibility of reducing this time constant by decreasing C_2 is subject to the lower limit set by stray capacitances. The necessity of a comparatively low load resistor (of the order 2 kΩ to 5 kΩ) requires a very low impedance diode and although specially designed diodes have been produced for the present application the efficiency of detection is not high. The extent to which the diode impedance may be reduced depends largely on the permissible limit of the consequent increase of anode-cathode capacitance; this has the bad effect of passing the output R.F. voltage over the valve and forms a potentiometer together with the diode load. In a typical U.H.F. diode (Fig. 6.6B) the anode-cathode capacitance is 2 pF. A point worthy of mention is the possibility of improving the high modulation frequency response of the

diode load by the technique adopted in the V.F. stage, although this rarely goes beyond the addition of a compensating inductor in series with the load resistor. With the arrangement shown in Fig. 6.6A a signal having positive modulation will provide an output going positive with white and correspondingly for negative modulation. If the opposite polarity is desired it is only necessary to reverse the diode; this transfers the heater-cathode capacitance from the diode load to the tuned circuit.

The problem of filtering off the R.F. component of the detector output is considerably increased if the signal frequency

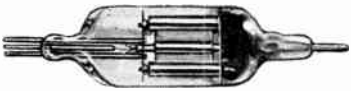

FIG. 6.6B. A TYPICAL TELEVISION DETECTOR DIODE; THE MAZDA 6D1

(Courtesy of Edison Swan Electric Co., Ltd.)

is converted, as in the superheterodyne method of reception, to a lower value. The ratio of intermediate frequency to maximum modulation frequency may in the British case, where an I.F. of less than 10 Mc/s is often employed (the standard American I.F. is about 25·75 Mc/s), may be as little as 3 : 1. For this reason the push-pull form of detector may be employed. It will be noted at (i) in Fig. 6.6C that the load *CR* is connected to the earthy centre-tap of the feed transformer secondary which eliminates the leakage effect mentioned in the case of the single-diode circuit. Moreover, the fundamental frequency of the pulsating current passing into the common *CR* load is doubled by the push-pull method of operation, since although both diodes conduct only on the positive half-cycles of their respective inputs each conducts once per whole cycle of input.

In view of the advantage, already noted, of operating the detector at a high signal level, it is sometimes possible, particularly when a tube requiring a compatatively small modulating voltage is used, to develop sufficient voltage for direct drive of

the cathode-ray tube by the use of a detector of the voltage-doubler type. On the positive-going half-cycles of input at the top of the input transformer secondary (see (ii) of Fig. 6.6c) the left-hand diode conducts and charges C_1 while on the alternate half-cycles the right-hand diode passes current into C_2; by arranging C_1 and C_2 in series between the output terminals,

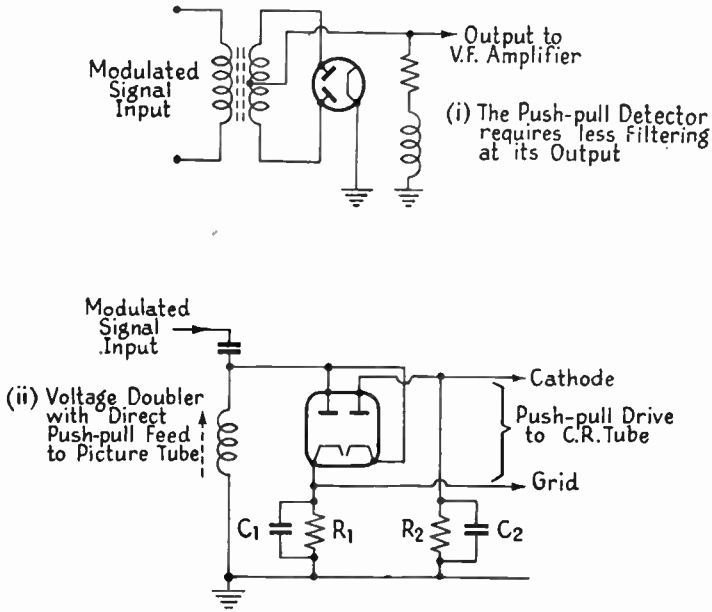

FIG. 6.6c. OTHER FORMS OF DETECTOR

twice the output obtainable from one diode circuit alone may be obtained. It is convenient to use one output to modulate the cathode-ray tube at its grid and the other to feed the cathode.

It is possible to combine detection with subsequent video-frequency amplification by using, for example, the anode-bend type of detector, but such circuits are rarely employed.

6.7. Wide-band Predetector Amplification. Whether all or only a portion of the total required amplification required in the stages preceding the detector is carried out at the actual carrier frequency of the received signal, the same general principles in regard to achieving the necessary bandwidth

apply. The major practical difference between the television receiver and its broadcast counterpart is the greater number of predetector amplifying stages required, for whereas the latter type of receiver very rarely requires more than one I.F. stage in the superhet case, or possibly two stages in an equivalent straight circuit, the former needs at least three amplifiers in the superhet arrangement and four or more in the tuned radio-frequency case.

The amount of gain obtainable from a tuned amplifier is roughly inversely proportional to the desired bandwidth, i.e. the product of gain and bandwidth is approximately a constant. The value of this product depends on the amount of capacitance associated with the load and it increases as this capacitance is reduced. The effect of the latter is to limit the extent to which the load impedance may be increased, for a given bandwidth, and to restrict correspondingly the maximum available stage gain. The first practical point that arises from these general circuit properties is that every effort must be made in the choice and arrangement of the amplifier circuit to minimize the various factors contributing to the total load capacitance. The greater part of this capacitance is made up of the output capacitance of the valve which drives the load and the input capacitance of the following valve. so that, as in the video-amplifier stage, the most suitable valve is one having a high mutual conductance and low interelectrode capacitances. During and since the war a number of miniature valves (e.g. Mazda 6F13, American 6AC7), having very satisfactory characteristics for television signal amplification have been developed. One important difficulty arising in the case of predetector amplification is the need for tuning each circuit, which in most methods of controlling the resonant frequency inevitably augments the total load capacitance.

In the simplest practical stage, which is very frequently employed in practice, the resonant portion of the load takes the form of a small coil whose effective inductance is controlled by a core of ferromagnetic material which screws into the threaded hollow interior of the coil former; the tuned circuit

is completed by the self-capacitance of the inductor together with the total parallel capacitance of the associated circuit; no additional capacitor is employed. The inductor is usually connected directly into the anode circuit of the amplifier and the signal voltage developed across it is passed on to the next stage by a *CR* coupling (see Fig. 6.7A). In the case of the stage feeding the detector, however, it is preferable to transpose inductor and coupling resistor, at the expense of amplifier anode voltage, in order to minimize the resistance inserted into the

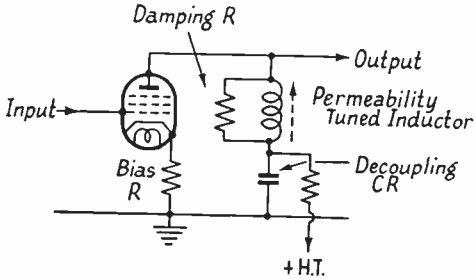

FIG. 6.7A. THE TUNED-ANODE SIGNAL AMPLIFIER

circuit loop containing the low resistance diode and its load, as in Fig. 8.7A. Here the purpose of the load resistor is not merely to complete the direct-current path to the valve electrode to which it is connected without short-circuiting the inductor, but to provide the damping required to flatten adequately the response of the load.

STAGGERED TUNING. The extent to which damping must be applied has led to the adoption of a technique not found in broadcast receivers. If all the amplifier loads were "peaked" to the central frequency of the band occupied by the signal each would need very heavy damping to cover the entire band. While this method has been employed it is now almost universal practice to spread the resonant frequencies of the amplifier couplings over the desired band and to reduce the damping so that while each load responds effectively to only a portion of the band the considerable increase in amplification per stage results in a comparable overall gain. Expressed, alternatively, while one or two of the loads are tuned to the carrier (or

intermediate) frequency the resonant frequencies of the latter are "staggered" symmetrically about this frequency. It is convenient to use five tuned circuits and to arrange their resonant frequencies and degrees of damping as indicated in Fig. 6.7B. The use of staggered tuning has several advantages over single-frequency tuning. Each stage can be tuned independently of the remainder, there is less possibility of instability due to feedback, since the input and output circuits

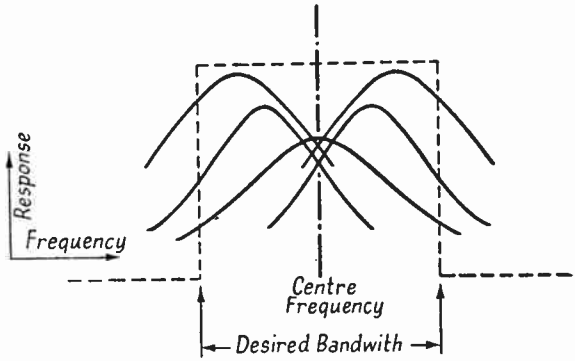

FIG. 6.7B. USE OF FIVE DAMPED AND STAGGERED TUNED CIRCUITS TO ACHIEVE WIDE-BAND RESPONSE

of each stage are tuned to different frequencies, less shielding between stages is needed, and a single inductor is cheaper and smaller than a screened two-winding transformer.

BANDPASS COUPLINGS. Returning to the case of the single stage the performance of the coupling circuit may be improved by inserting a reactance between the amplifier anode and the following grid in order to split up the total capacitance. Both anode and grid circuits may then be tuned separately and the resultant coupling behaves in the same way as the bandpass transformer of a broadcast receiver I.F. stage. As the coupling between anode and grid circuits is increased the initial single-peaked response broadens; beyond the optimum degree of coupling the broadening peak begins to develop a double hump and as the frequencies of the two humps separate with increase of coupling the trough in the response curve between them deepens. While this double-humping provokes comparison

with staggered tuning it is not used and bandpass couplings when employed are nearly always optimally coupled.

In the typical bandpass coupling of Fig. 6.7c a variable (adjustable dust-core) inductor is placed in each of the anode

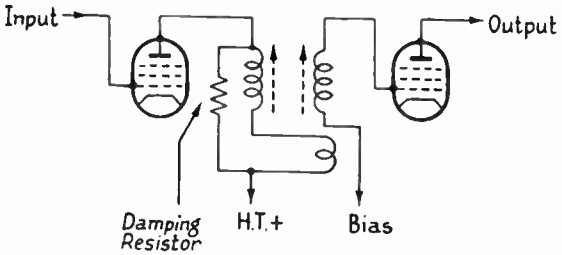

FIG. 6.7C. MAGNETICALLY-COUPLED PAIR OF "SELF-RESONANT" PERMEABILITY-TUNED INDUCTORS, FORMING A BANDPASS COUPLING

and grid circuits and loose coupling to the grid inductor is provided by a small winding connected in series with the anode inductor. The damping resistor on the latter will be noted. Each inductor tunes with its self-capacitance and that of the associated valve. In American practice the three inductors are often arranged in the form of a T between anode and grid and

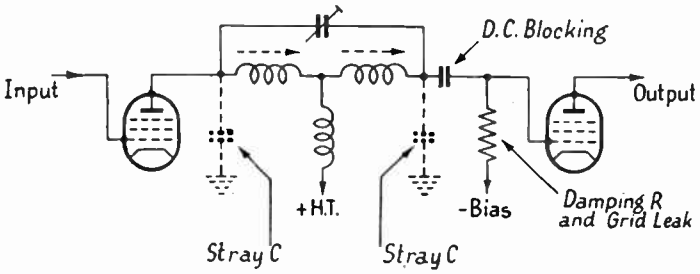

FIG. 6.7D. BRIDGED-T TYPE COUPLING NETWORK

sometimes the T is bridged by an additional variable capacitor; in these cases coupling is due to the common inductor (and also to the bridge capacitor in the second example) rather than by magnetic coupling (see Fig. 6.7D). It is important to remember in all methods of coupling, of which the three shown are representative but by no means exhaustive, that the self-capacitances of the inductors and the input and

output capacitances of the associated valves all contribute materially to the overall response of the coupling. Thus the number of elements in the network may be five or more and design or analysis of the complete coupling is best done by classical wave filter theory, which is beyond the scope of the present book.[8, 9, 10, 11, 12, 13, 14]

SINGLE-SIDEBAND RECEPTION. All U.S. receivers are of the single-sideband type, but in the case of British receivers choice must be made between single- and double-sideband reception. In ordinary broadcasting by the usual (amplitude modulation) method both sidebands are invariably transmitted and since the major design problem is the reduction rather than extension of the overall bandwidth double-sideband reception is always preferred. No advantage is gained at the receiving end by aiming at a bandwidth sufficient to accommodate only one sideband, in fact there are three important disadvantages. Not only is the signal strength halved when only one sideband is accepted but tuning is much more critical and a higher order of stability is required. In the television case, however, the choice of single-sideband reception eases considerably the achievement of the required bandwidth, and the halving of the effective signal strength is more than made up for by the fact that the gain of each stage may be doubled; the overall gain is therefore increased by the factor 2^{n-1}, where n is the number of stages. The tuning difficulty is not serious when, as is the present case in this country, only one station is available. Even so, the single-sideband amplifier must be thoroughly stable and carefully tuned. An important point is that at the carrier frequency the response should be 6 db down to obtain a level frequency response. If the carrier is placed higher up the sloping side of the response curve the high frequency portion of the accepted band will predominate over the lower frequencies, and vice versa. Single-sideband reception is more satisfactory with superhet circuits, but is often employed in straight receivers although its adoption has been made less advantageous in the latter case by the improved R.F. performance of modern miniature U.H.F. pentodes.

Choice between the upper and lower sidebands depends chiefly on whether it is needed to have common picture and sound signal amplifiers in the early stages of the receiver; if so, the lower band 45 Mc/s down to, say, 42 Mc/s is preferred, because it is sufficiently near to the sound channel (41·5 Mc/s) to allow a common amplifier. Otherwise, selection of the upper sideband has the considerable advantage of reducing the difficulty of eliminating the sound signal from the picture channel.[15]

Choice of Valve and Mode of Operation. Thus far the amplifying system has been considered only in terms of the major problem, that of obtaining the desired bandwidth, and it has been assumed that, as is usual, amplifiers of conventional type having grid input and anode output and using valves of the pentode type are used. It is quite possible to use triode amplifiers, however, if arrangements are made to neutralize feedback over the internal anode-grid capacitance of the valve, and this can be done quite simply by grounding the control grid provided the valve is arranged to have a short multiple connection from the actual grid structure to the grid in the base; valves of this type are now available and have been used in all stages of the receiver. Triode circuits are very suitable for R.F. amplification in superhets or for the early stages of tuned R.F. circuits where the noise factor is important, as will be explained in a later section.

It is very important in the amplifier stages to achieve the highest degree of stability. The feed circuits to the various electrodes must be thoroughly decoupled and the earth connections of each stage must be returned to a common chassis connection. The chassis material must have very low resistance; a hot-tinned steel chassis is suitable. A small (10–30 Ω) resistor is often included in the cathode circuit to swamp the inductive reactance of the cathode lead of the valve and thereby improve the phase angle and increase the magnitude of the input impedance of the valve. These points are illustrated by the practical circuit of Fig. 6.7E.[13]

Manual Gain Control. The "contrast" (gain) control of the amplifier needs careful consideration for two reasons.

Firstly it is normally necessary to control more than one stage by a single control, so that undesirable interstage signal coupling may arise, and secondly variation of the feed potentials of a valve causes slight changes of input impedance, and particularly of its capacitative reactive component, which may result in an appreciable effect on the bandwidth and response shape of the amplifier. Minimization of these two difficulties is hindered by the unsuitability of the variable-mu type of valve in view of its low mutual conductance by comparison with that of the short grid-base sharp cut-off type, which makes the choice of the latter type almost automatic. The simplest and most effective method of gain control is by varying the control-grid bias. As the latter is made more negative, the slope of the valve falls, but at the same time the quiescent current and grid-cathode capacitance fall while the input impedance rises. The change of quiescent current added over two or more high-slope valves may cause a serious change of loading on the receiver power supply and thereby affect the performance of other circuits. Variation of screen potential suffers less from the latter defect, but in view of the fact that variation of the suppressor-grid negative bias reacts oppositely on the valve input impedance to the effect of control-grid bias change, it is convenient to control both electrodes from a common control and this is probably the commonest arrangement in use. The suppressor needs a much greater bias variation than the control grid. A suitable circuit for providing these control potentials is given at (i) in Fig. 6.7F.[14, 16]

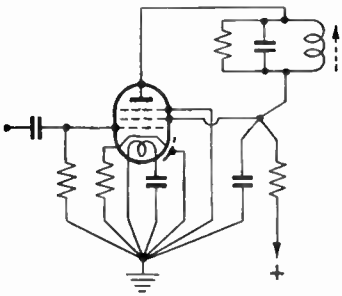

Fig. 6.7E. Use of Common Earthing Point for all Chassis Returns

Automatic Gain Control (A.G.C). In American receivers, automatic control of gain (A.G.C.) to provide a practically constant output over a wide range of variation of input signal strength is often incorporated. In addition to the benefit of

constant amplitude input to the synchronizing circuits there is the advantage of not having to reset the contrast control when changing to another transmission. The method adopted is the same in principle as A.V.C. in sound receivers—the output of the last I.F. amplifier (R.F. in a T.R.F. circuit) is rectified and as a negative-going voltage is applied to one or more of the signal-amplifier control grids so that as the signal input rises the bias on the controlled amplifiers runs more negative and limits the consequent increase in signal output. The fact that the American signal is brought to the constant (100 per cent) level to form a synchronizing pulse at the end of every line makes it more adaptable to A.G.C. than the British signal. It is necessary only to pass the signal through a peak rectifier as shown in the example of Fig. 6.7F. In this circuit the synchronizing pulses produce a positive-going output to the control-voltage amplifier and as the signal rises the amplifier passes more current and reduces the anode potential. The control valve has a negative potential on its anode (and the cathode is, of course, made even more negative) so that it may be connected through a d.c. path to the grid circuits of the controlled amplifiers. The feed system must contain adequate buffering in the form of long time constant *CR* filters between the controlled circuits. The manual contrast control is arranged to vary the standing current of the control valve.

Signal Frequency Amplification. Up to this point no distinction has been made between amplification at carrier and at intermediate frequency. In both cases all of the methods of obtaining the required bandwidth and of controlling gain are applicable. The chief difference arising from the difference of frequency is in the degree of circuit stability and the extra care needed to achieve stability at the carrier frequency involves choice of valve and components and of arrangement of wiring rather than change of circuits or methods.

It will be useful to consider rather closely the action of a valve stage at ultra-high frequency. Starting from a low frequency, the valve behaves between anode and cathode as

a resistor whose value is readily controllable and without absorption of power by the control grid; thus it is possible to consider the valve input and output circuits separately

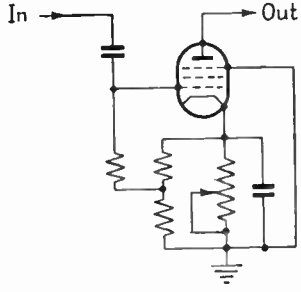

(i) Gain Control by Simultaneous Variation of Control- and Suppressor-grid Potentials

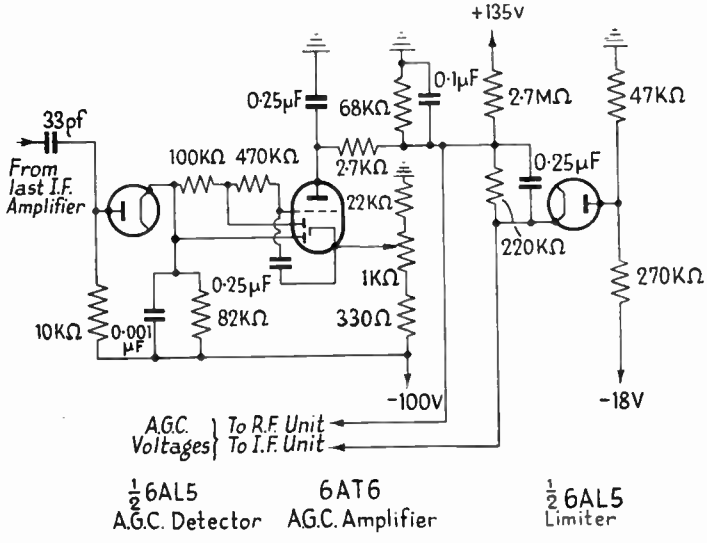

FIG. 6.7F. GAIN CONTROL CIRCUITS

unless appreciable feedback is purposely introduced, e.g. by inserting a resistor in the cathode lead of the valve. At the higher audio frequencies, however, the reactances of the small interelectrode capacitances are sufficiently low to require to be taken into account—in particular the grid to anode capacitance brings into play the well-known Miller effect. Further

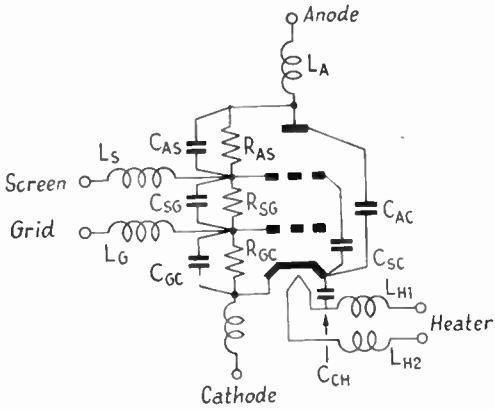

FIG. 6.7G. EQUIVALENT NETWORK OF TRIODE VALVE OPERATING AT U.H.F.

complication of valve action does not arise until the signal frequency exceeds 5–10 Mc/s (depending on the particular valve), when two additional factors become important; firstly the inductances of the leads between the valve electrodes and the connecting pins on the base become important in relation to the external circuit components, and secondly a phase lag arises between the applied signal and the resultant change of space current due to the finite time of transit of an electron across the valve (see Fig. 6.7G). The internal inductances cause instability or reduction of gain while transit time reduces valve input impedance and also reduces amplification. Except for the occasional insertion of a small cathode resistor, as already noted, these effects have not led to marked changes of theoretical circuits since they have been minimized by improved valve design. On the other hand, they do emphasize the need for miniature components and of mountings either on or very close to the actual valve base. A typical miniature signal amplifier valve is shown in Fig. 6.7H.[13, 14, 16, 21, 22]

FIG. 6.7H. THE 6F13; AN EXAMPLE OF THE NEW MINIATURE U.H.F. SIGNAL AMPLIFIER PENTODES

(Courtesy of Edison Swan Electric Co., Ltd.)

6.8. Rejection of the Sound Signal. The frequency band occupied by the sound signal is so close to that allotted to the picture signal in both British and American

transmissions that special precautions must be taken to reduce to a negligible level the transmission of the sound signal through the vision receiver.

The most satisfactory method of easing this problem is to adopt the superheterodyne method of reception, for as in broadcast reception this method automatically improves adjacent channel selectivity when the fixed frequency band to which all signals are converted is actually intermediate between the signal band and the frequency range occupied by the demodulated signal. It will be remembered that this improvement arises from the fact that while the absolute frequency difference between the desired and undesired signals remains the same after the frequency change, this difference becomes larger in proportion to the new carrier frequencies. The advantage of single-sideband reception in the British case has already been mentioned; use of the upper sideband of 45 to 48 Mc/s places the sound signal 3·5 Mc/s away from the lowest frequency of this upper band. In British receivers this advantage may be used together with superhet reception in which case sound rejection is made much easier.

When the problem is serious, as in the case of double-sideband reception in a straight receiver, special rejector circuit methods must be adopted. In general the problem is to introduce a deep and narrow trough at the correct point in the overall response curve without otherwise modifying the latter. One or other of the various circuital methods available is usually to be found in commercial receiver circuits, even when, as in the U.S. case, superhet reception is employed.

Two obvious methods are to place a series (acceptor) tuned circuit in shunt with the signal path or to insert a *parallel* (rejector) type tuned circuit in series with the signal path so that the sound channel is filtered relatively to the vision signal. If the additional circuit elements required are inserted directly into the amplifier couplings the optimum values for maximum rejection are usually inconvenient or unsatisfactory in relation to the existing coupling network but more appropriate values can be obtained by transformation arising from inductive

rather than direct coupling of the filter. The two arrangements so derived are shown in Fig. 6.8A; sometimes they are employed in practical circuits. When additional elements are added in this manner the complete coupling network must be regarded

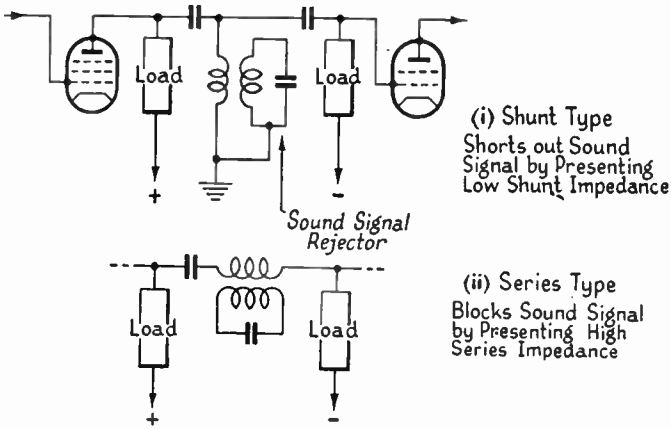

FIG. 6.8A. TWO METHODS OF REJECTING THE SOUND SIGNAL FROM THE VISION CHANNEL

not as a combination of relatively independent sub-groups of components but as a whole network, and analysis and design can be done with accuracy and convenience only in terms of four-terminal transmission-network theory. Using the latter

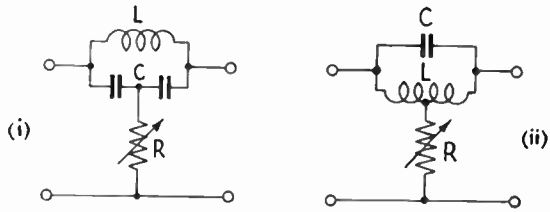

FIG. 6.8B. BRIDGED-T RESISTANCE-TUNED SOUND REJECTORS

as a design basis it is possible to obtain the desired frequency response in each coupling by a configuration which may not be readily separable into vision-signal coupling and sound-signal rejection sections.

A typical four-terminal network suitable for sound-signal rejection is shown in its two equivalent forms at (i), (ii), in Fig. 6.8B, as used in the current Ekco and Philco receivers

respectively. The action of this type of circuit is similar to that of a bridge and the adjustment of R for zero output balances the equivalent bridge network. The frequency at which zero output occurs is approximately the resonant frequency of the parallel-tuned circuit (LC) and balance obtains when R is made approximately $\frac{1}{4}\omega LQ$ $\left(\text{where } Q = \frac{\omega L}{R_L} \text{ and } \omega = 2\pi f\right)$.

A very good method makes use of negative feedback (Fig. 6.8c). A parallel LC circuit tuned to the sound frequency is inserted into the cathode lead of the signal amplifier. At the sound-signal frequency the impedance of the tuned circuit is largest and purely resistive so that heavy feedback occurs. Away from this critical frequency the feedback falls because the magnitude of the circuit impedance falls and its phase angle shifts and moves the feedback phase away from exact opposition to the input. The cathode lead is usually tapped into the rejector inductor in order to reduce the load placed on the rejector by the valve circuit.[17, 18, 19]

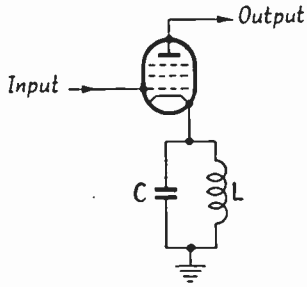

FIG. 6.8c. CATHODE-FEEDBACK REJECTOR

6.9. Frequency Changers for Superheterodyne Reception. When it is decided to carry out the bulk of the amplification at an intermediate frequency a frequency changer must be incorporated at an early point in the signal chain.

CHOICE OF INTERMEDIATE FREQUENCY. The choice of the intermediate frequency (f_i) is an important point. The American R.M.A. have chosen 25·75 Mc/s for the vision channel and 21·25 Mc/s for the sound; the earlier standard had been 12·75 Mc/s for vision and 8·25 Mc/s for sound. No standard has been adopted in this country but both vision and sound I.F.s usually lie in the band 8 to 15 Mc/s with preference towards the higher end; a typical example is the Murphy V.116, which employs 13·5 Mc/s for vision and 10 Mc/s for sound. The broad factors underlying the choice of the I.F.

are mutually conflicting, for while it is an advantage to raise the I.F. in order to increase the ratio of I.F. to picture signal bandwidth, and thereby ease the problem of achieving the required bandwidth, the performance of the amplifiers deteriorates with regard to gain and stability. Moreover, if only one station is to be received no advantage will be gained in frequency translation unless the reduction is considerable; in the limit the permissible reduction is set by the maximum modulation frequency. In the British case it would therefore appear that of the available frequency range, from maximum modulation frequency of 3·0 Mc/s (say) to the edge of the lower sideband, i.e. 42·0 Mc/s, the region between 10 and 20 Mc/s would be most suitable if full advantages of superhet reception are to be gained. A further factor is of sufficient importance to be considered in making a more precise choice; the output of the I.F. amplifier always contains harmonics of the I.F. which may be fed back in sufficient strength to interfere with the signal in the preselector circuits. Thus the second harmonics of an I.F. of 22·5 Mc/s will have a frequency equal to the video carrier (45 Mc/s); expressed more generally, frequencies given by $\frac{45 \pm f}{n}$ where f is the half-bandwidth and n an integer (i.e. 1, 2, 3, etc.) may possibly lead to this trouble. These bands of undesirable intermediate frequency are given in the accompanying table for $n = 1$ to 6, together with the frequencies of the intermediate clear bands, viz. 8·2, 10·05, 13·0, and 18·5 Mc/s, of which the first three have been used in commercial receivers; intermediate frequencies around 13 Mc/s are becoming more popular and the trend is definitely upward. Elimination of harmonic interference is largely a matter of careful screening and filtering and a high I.F. helps in the filtering problem which is most acute at the high-level (detector) end of the amplifier, where push-pull detection is helpful.[20]

Choice of Local Oscillator Frequency. The local oscillator frequency (f_o) may have either of the two frequencies of $f_c \pm f_i$ relative to the carrier frequency (f_c). When it was

TABLE VI: UNDESIRABLE INTERMEDIATE FREQUENCIES AND INTERMEDIATE CLEAR-BAND FREQUENCIES (Mc/s)

	Sub-harmonic Bands of Video Signal			Intermediate Bands		
n	Lower Limit	Centre	Upper Limit	Lower Limit	Centre	Upper Limit
1	42	45	48			
				24	33	42
2	21	22·5	24			
				16	18·5	21
3	14	15	16			
				12	13	14
4	10·5	11·25	12			
				9·6	10·05	10·5
5	8·4	9	9·6			
				8	8·2	8·4
6	7	7·5	8			

more difficult to generate oscillations of frequency greater than the video carrier the lower of these two values was preferred, and still is, in most British receivers, despite the possibility of interference from the second harmonics of short-wave stations operating below 20 Mc/s. It is common American practice to choose the upper value, which is less susceptible to short-wave harmonic interference, because it falls around the "second channel" (i.e. $f_c - f_i$ when $f_o > f_c$), to which the receiver is made less sensitive than to f_o by the tuned R.F. circuits needed ahead of the frequency changer in order to increase signal-to-noise ratio. And since the picture carrier is below the sound carrier (Fig. 6.1A (i)) the picture I.F. comes out at a higher value than the sound I.F. when a common frequency changer is employed, thus giving a higher ratio of picture I.F. to maximum video modulation frequency. If a relatively high I.F. is employed the problem of achieving sufficient stability of the local oscillator when tuned to the higher $(f_c + f_i)$ of the two possible frequencies may be distinctly greater than in the lower case.

COMPLETE FREQUENCY-CHANGING CIRCUITS. It is very rare for the functions of oscillation generation and frequency mixing to be attempted in a valve using a single electron stream,

chiefly because the production of a sufficiently large and stable oscillation requires a separate oscillator valve. A triode-hexode is often employed and specially designed U.H.F. forms of this combination allow advantage to be taken of the possibility of short, direct connection between the two circuits without excessive mutual couplings of an undesirable kind. The most satisfactory arrangement appears to be a pentode U.H.F. amplifier valve as the mixer together with a U.H.F. triode oscillator. A comparatively recent development is the use of a double U.H.F. triode as a complete frequency-changing stage.

An example of the triode-hexode frequency changer as used in H.M.V. models 1803, 1804, is shown in Fig. 6.9A. The first grid of the hexode mixer is fed capacitatively from the anode of the preceding R.F. amplifier. The grid inductor, which is tuned to 45·0 Mc/s by its own and the associated capacitances (strays), is returned to ground so that the grid is biased negatively to the cathode by the amount of voltage developed across the total resistance between cathode and earth. The local oscillation generated by the triode portion of the X81 frequency changer, which is arranged as a conventional Hartley oscillator, is injected internally by direct connection between the grid of the triode and g_3 of the hexode. The triode oscillator is stabilized to some extent by the provision of a self-biasing grid CR combination, by the inclusion of a 10 Ω "anti-parasitic" resistor in its anode lead and by a well-decoupled anode feed. An interesting point is the sharing of a common-cathode variable resistor between the mixer and first I.F. amplifier for the purpose of "contrast" control; the 220 Ω, 0·1 μF decoupling filter will be noted.

Probably the most efficient frequency-changing arrangement is that in which the three functions of local oscillation generation, mixing and detection are separated and a modern U.H.F. valve used in each stage. A good example is that employed in the Murphy V.116 (shown in Fig. 6.9B). The local oscillator and R.F. amplifier feed in parallel to the anode of a diode frequency changer having the tuned I.F. load in its cathode

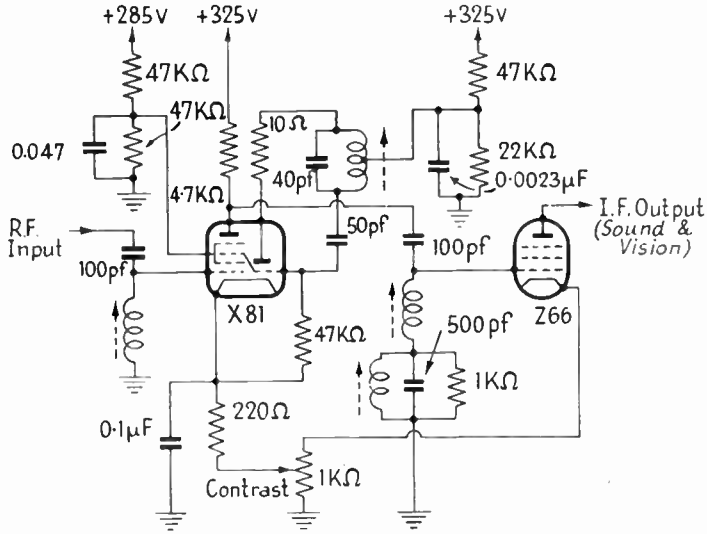

FIG. 6.9A. THE FREQUENCY-CHANGER CIRCUIT OF H.M.V. MODEL 1804 RECEIVER

(Courtesy of The Gramophone Company, Ltd.)

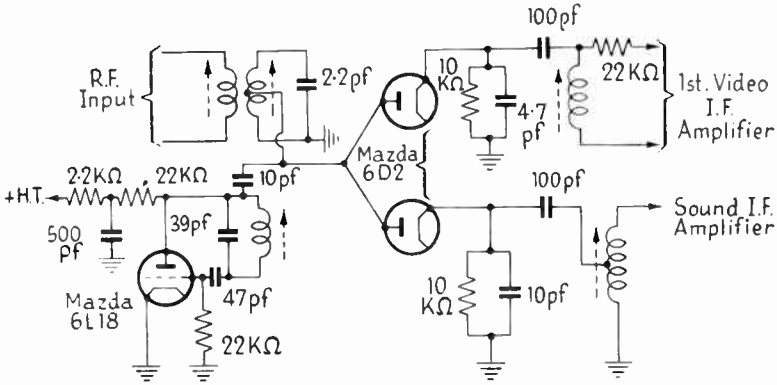

FIG. 6.9B. THE FREQUENCY-CHANGER CIRCUIT OF MURPHY MODELS V114, 116

(Courtesy of Murphy Radio, Ltd.)

circuit. The parallel *CR* in this circuit not only forms part of the damped I.F. tuned circuit but develops cathode bias for the diode. Both control and suppressor grids of the first I.F. amplifier are biased and the cathode tuned circuit is tuned to the sound I.F. in order to eliminate "sound on picture" by negative feedback. The diode is not

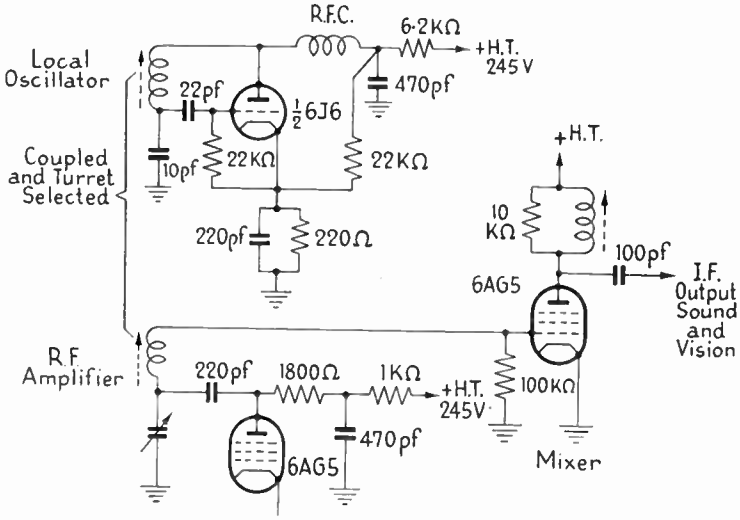

FIG. 6.9C. THE FREQUENCY-CHANGER CIRCUIT OF THE PHILCO MODEL 48–1000

(Courtesy of the Philco Corporation, Ltd.)

only effective as a mixer but has the advantages of introducing little "noise" (see § 6.10) voltage, and of being difficult to overload and linear in its R.F. input–I.F. output characteristic.

An example typical of American practice is shown in Fig. 6.9c, where a conventional Colpitts oscillator employing one section of a 6J6 double-triode feeds through a coupling inductor to the grid of a 6AG5 R.F. pentode mixer to which electrode the R.F. signal is applied. The I.F. output is selected by a bandpass transformer in the anode circuit of the mixer. This circuit is taken from the Philco Model 48–1000 receiver described in Chapter VIII.

The final example, shown in Fig. 6.9D, is representative of the present trend in U.S. receivers where single and double U.H.F. triodes are beginning to replace pentodes in the early

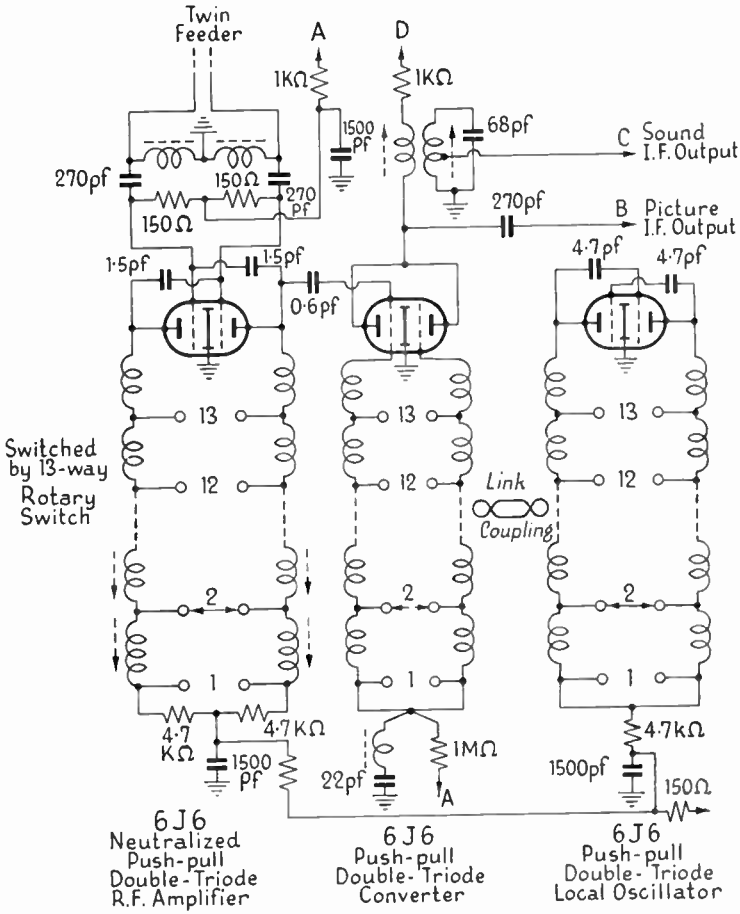

FIG. 6.9D. THIRTEEN-CHANNEL U.H.F. UNIT
(Courtesy of R.C.A., Ltd.)

stages of the signal chain. The circuit is given in skeleton form because the tuning circuit is switchable over thirteen spot frequencies, one for each allotted channel. The mixer has a push-pull tuned input circuit between the two control grids

of the double-triode, one of which is fed capacitatively by the R.F. amplifier and the other magnetically from the local oscillator, while the outputs are paralleled to a common anode load tuned to the I.F. The load is composite and feeds both sound and picture I.F. channels.[21, 22]

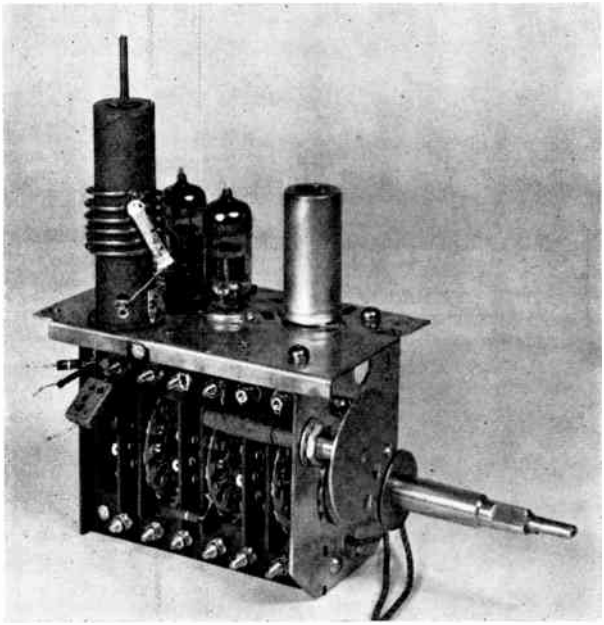

FIG. 6.9E. THE R.F. UNIT OF THE R.C.A. TELEVISION RECEIVER
The circuit of this unit is shown in Fig. 6.9D.
(*Courtesy of "R.C.A. Review"*)

6.10. Noise. The importance of noise is well known in connection with long-distance broadcast reception and it will be remembered that an effective method of improving the signal-to-noise ratio is to include at least one stage of R.F. amplification prior to the frequency changer. During the war the problem of noise reduction was so important (for it was noise that limited the detection range of radar receivers) that the subject was studied intensively and new methods of assessing, measuring, and reducing the noise output of receivers were developed. Noise is important in television reception for

similar reasons; the transmitted power is relatively small, is rapidly absorbed in travelling over the earth's surface, and is normally received only over the direct path between transmitter and receiver. Accordingly it is necessary for the noise performance of a receiver to be as high as possible if satisfactory reception toward the edge of the service area of the transmitter is to be achieved. The problem is aggravated by the wide acceptance band of the television receiver.

The noise output, i.e. random signal fluctuations which produce background hiss at all frequencies in sound receivers,

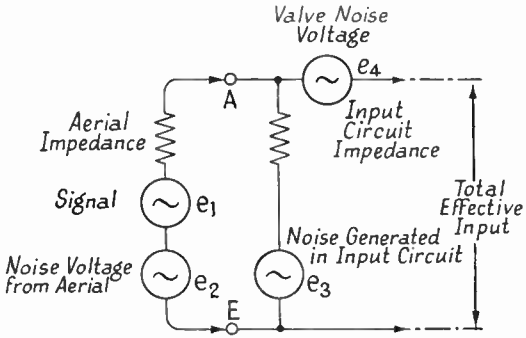

FIG. 6.10A. EFFECTIVE ARRANGEMENT OF THE THREE PRINCIPAL SOURCES OF NOISE VOLTAGE IN THE FIRST STAGE OF THE RECEIVER

is due to various causes. At ultra-high frequencies the random signals received from unknown sources in space although small, are much stronger than at lower frequencies, and this undesired input adds to the tiny voltages produced by thermal agitation in all the conductors forming the entire input circuit to the valve; moreover, appreciable "shot" and fluctuation noise is contributed by the first R.F. amplifier. Provided the gain of this stage is adequate the additional noise contributed by succeeding valves and their coupling circuits is negligible. The two principal methods of noise reduction are, firstly, careful choice of configuration of the components in the input circuit and also of their self-impedances so that the total grid-cathode noise input to the first valve is minimized and, secondly, choice of a suitable valve and mode of operation. The first point is illustrated by Fig. 6.10A, where the noise

voltage picked up by the aerial (e_1), the thermal noise voltage generated in the aerial (e_2) and in the input circuit (e_3), and the noise voltage contributed by the valve (e_4) are shown in relation to the impedances of the simplified circuit configuration. The thermal voltages are dependent on the values of these impedances and by choice of the latter together with

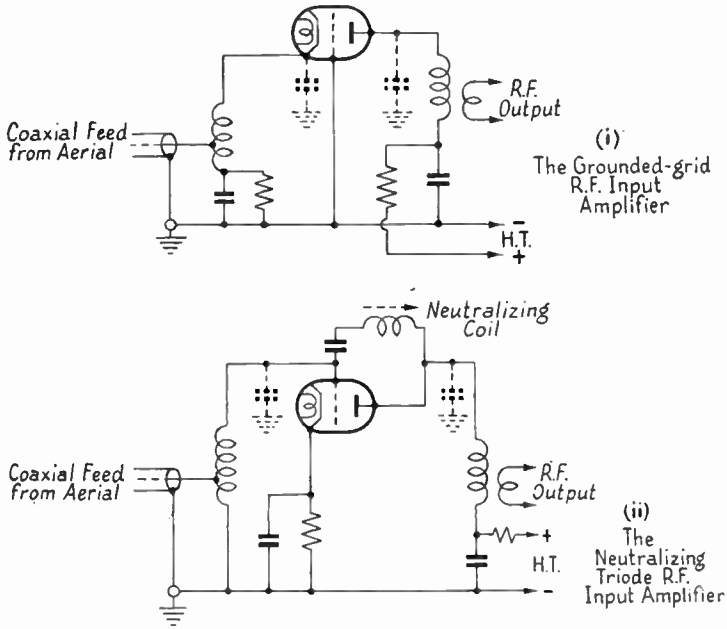

FIG. 6.10B. TWO R.F. INPUT AMPLIFIER CIRCUITS HAVING BETTER SIGNAL/NOISE PERFORMANCE THAN THE CONVENTIONAL GRID INPUT–ANODE OUTPUT PENTODE AMPLIFIER

appropriate arrangement of the coupling circuit (usually a tapped inductor) the overall noise input to the valve can be reduced to a minimum. Incidentally the conditions for maximum signal/noise ratio are not, in general, the same for maximum signal energy transfer.

The slope of the amplifier valve should be high, because the signal power output increases as its square. A pentode contributes more noise than a triode because noise caused by the random nature of the arrival of electrons at the anode is

increased by the random partition of the space current between screen and anode. It is possible to reduce the anode shot noise in any form of amplifier valve by cathode feedback, but partition noise is obviously not improved by this method and is of sufficient magnitude to justify the preference for a triode valve. There are two ways of making the latter suitable for high-frequency working, i.e. of nullifying the feedback from anode over the anode-grid capacitance. The grid may be earthed and the signal applied to the cathode, or the inter-electrode feedback may be neutralized by anti-phase feedback over an additional external path. Of the two methods the first has been used extensively in radar and in some television receivers, but the adoption of the second method is a recent trend, particularly in America. The neutralized triode usually provides more gain because in the grounded-grid circuit appreciable feedback voltage is developed across the cathode input circuit. Skeleton circuits of the two arrangements are shown in Fig. 6.10B.[14, 21, 22, 23]

BIBLIOGRAPHY

(1) KEALL, O. E. Correction Circuits for Amplifiers. *M.R.* May (1935) 15.

(2) HEROLD, E. W. High-frequency Correction in Resistance-coupled Amplifiers. *C.* Aug. (1938) 11.

(3) WHEELER, H. A. Wideband Amplifiers for Television. *P.I.R.E.* July (1939) 429.

(4) SWIFT, G. Amplifier Testing by Means of Square Waves. *C.* Feb. (1939) 22.

(5) BEDFORD, A. V., and FREDENDALL, G. L. Transient Response of Multi-stage Video-frequency Amplifiers. *P.I.R.E.* April (1939) 277.

(6) FOSTER, D. E., and RANKIN, J. A. Video Output Systems. *R.R.* April (1941).

(7) COCKING, W. T. Television V.F. Stage. *W.W.* Aug. (1946) 265.

(8) COCKING, W. T. Television I.F. Amplifiers. *W.E.* July (1938) 358.

(9) COCKING, W. T. High Gain Television Amplifiers. *W.W.* 24th Nov. (1938) 459.

(10) WEST, S. The Television I.F. Amplifier. *W.W.* 6th April (1939) 319.

(11) MOUNTJOY, G. Simplified I.F. Systems. *R.R.* Jan. (1940) 299.

(12) WEIGHTON, D. Performance of Coupled and Staggered Circuits in Wideband Amplifiers. *W.E.* 21 (1944) 468.

(13) SZIKLAI, G., and SCHROEDER, A. C. Band-pass Bridged-T Network for Television Intermediate-frequency Amplifiers. *P.I.R.E.* Oct. (1945) 709.

(14) COPE, J. E. Some considerations in the Design of Wideband Radio-frequency Amplifiers. *J.I.E.E.* Dec. (1945) 237.

(15) POCH, W. J., and EPSTEIN, D. W. Partial Suppression of One Sideband in Television Reception. *R.R.* July (1937) 19.

(16) LANGFORD-SMITH, F. *Radio Designers Handbook*, Ch. XIV. Illiffe (1940).

(17) COCKING, W. T. Television Sound Rejection. *W.W.* Dec. (1946) 417.

(18) BUILDER, G. Resistance Balancing in Wave Filters. *A.W.A.T.R.* 3 (1938) 83.

(19) RODDAM, T. Wavetraps with Infinite Q. *W.W.* April (1945) 118.

(20) ——. Correct Choice of I.F. *W.W.* 10th March (1938) 224.

(21) HEROLD, E. W., and MALTER, L. Some Aspects of Radio Reception at Ultra-high-frequencies. *P.I.R.E.* Aug. (1943) 423; Sept. (1943) 491, 501; Oct. (1943) 567, 575.

(22) STRUTT, M. J. O. High-frequency, Mixing and Detector Stages of Television Receivers. *W.E.* 16 (1939) 174.

(23) MOXON, L. A. Noise Factor. *W.W.* Dec. (1946) 391; Jan. (1947) 11; May (1947) 171.

CHAPTER VII

THE SOUND CHANNEL

THE problem of combining the transmission of both sound and vision signals on a single carrier remains in the experimental stage and in present-day transmissions the sound signal is transmitted and received independently of the vision signal.

7.1. General Methods of Sound Transmission. When the B.B.C. transmitter was designed it was decided to take advantage of the wide frequency band available in the U.H.F. region and provide high-fidelity reception enthusiasts with a wide-band amplitude-modulated (A.M.) sound transmission. This decision was justified by the negligible frequency band occupied by the sound channel by comparison with the far wider picture channel and also by the comparative absence of other transmissions in the frequency range to be occupied by the complete television signal. At that time, i.e. before 1936, frequency modulation (F.M.) was, from the commercial point of view, in its infancy, but by the time television standards in the U.S.A. needed revision F.M. had been fully exploited and it was decided to adopt it instead of A.M. More recently the relative merits of the two methods of modulation have been critically examined, particularly in this country, and it is by no means certain that F.M. is generally superior to A.M. Although F.M. provides better reception under condition of heavy interference the latter is often of a pulsating nature such as that produced by the ignition systems of motor cars, and simple circuital methods have been developed for A.M. receivers which considerably mitigate this trouble. The chief disadvantage of F.M. is the increased complexity of the receiver and, since the problem of economics is far more acute at the receiving end than at the transmitter, experiments have been made with methods of modulation other than A.M. and F.M. in an attempt to reduce reception to the simplest possible

form. An example of these attempts is the Pye method of inserting width-modulated pulses in the line synchronizing pulse periods, and since this technique was demonstrated before the Institution of Electrical Engineers in January, 1946, details of similar American experiments have been published.[14, 15, 16]

7.2. Receivers for Amplitude Modulation. There is a wide variety in the circuits employed for reception of the sound channel in British receivers. It is most satisfactory, of course, to employ completely independent receiving chains for the sound and vision channels; the problems peculiar to each transmission may then be handled independently. The increased popularity of the straight receiver in post-war designs has led to the common adoption of separate T.R.F. chains for the two signals. A typical block schematic of such an arrangement is given in Fig. 8.6B. On the other hand, the superhet enables adequate discrimination between sound and vision signals to be achieved more easily than does the straight circuit and the extra cost of the frequency changer is offset by the possibility of making it common to both receivers. The resultant arrangement was very common in pre-war designs and is still widely used. In this case the common R.F. amplifier must have a sufficiently wide pass-band to accommodate both signals. Separate mixers may be employed as in the Murphy V.116 receiver (Fig. 6.9B) described in the next chapter. Alternatively, the two I.F. signals may be selected from the output of a common mixer, either in the output circuit of the mixer (Fig. 6.9D), or later in the I.F. amplifier (Fig. 8.3C). In one recent receiver the vision circuits are T.R.F., and sound is received on a separate superhet. In the cheaper class of receiver an output stage and loudspeaker may be dispensed with and the detector output taken to a socket linking to the pickup socket of an existing broadcast receiver.

The R.F. amplifier, frequency changer (where used) and detector of the sound receiver are generally similar to the corresponding stages of the vision receiver, but there are one

or two important differences. The overall bandwidth is considerably narrower, so that each amplifier provides a much higher gain and fewer stages of amplification are required. For reasons of stability, however, the bandwidth is not restricted to that needed to pass the signal (say 20 kc/s) but is widened to perhaps 50 kc/s–100 kc/s. This point is particularly important in superhet receivers where it eases the problem of oscillator stability. It is unnecessary to employ staggered tuning, but band-pass couplings are sometimes used. In most commercial receivers full justice cannot be done (for economic reasons) to the high quality of the sound transmission, and the audio-frequency circuit following the detector rarely consists of more than a conventional output stage. The latter must be thoroughly decoupled when its H.T. supply also feeds the vision receiver, otherwise interference will appear on the picture. Typical commercial circuits will be given in the next chapter.

7.3. Ignition Noise Suppression in A.M. Receivers. Most receivers include some method of limiting interference caused by car ignition. The problem will be discussed with reference to Fig. 7.3A, where an audio-frequency signal variation is accompanied by an interfering pulse signal. An obvious method of reducing the effect of the latter would be to pass the signal and interference through a diode gate so biased that when the pulses rise above the dashed line the diode becomes non-conductive. It will be clear that this method cannot be satisfactory unless the bias which decides the potential at which the gate opens is kept just above the audio signal voltage. A very satisfactory method due to H. A. Fairhurst and used in post-war Murphy receivers is given in the figure as a typical example of the variety of circuits in use. The variable bias for the gating diode V_1 is obtained from the signal voltage at the anode of the output valve by the rectifier V_2. This valve is coupled to the anode through C_1R_1 in order to block the d.c. component of the pentode anode voltage. Similarly the voltage developed across the cathode capacitor C_3 of V_2 and applied to the gating-diode anode through R_3 must be blocked

from the pentode grid without hindering the passage of the audio signal—hence C_2R_2.[1, 2, 3]

7.4. Receivers for Frequency Modulation. The basis of frequency modulation is the use of the modulating frequency

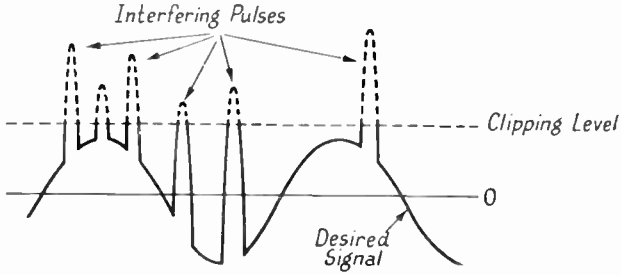

(i) Effect of Clipping Pulsating Interference at Fixed Level

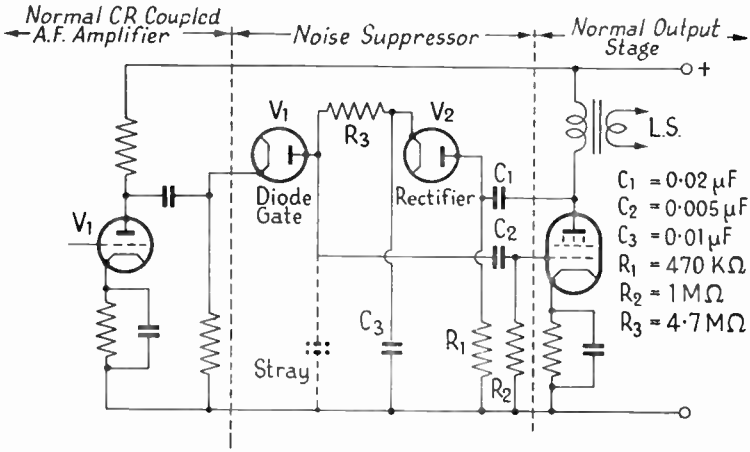

(ii) The Murphy Noise Suppressor Circuit. See also Fig 8·5c (V.10)
(Courtesy Murphy Radio Ltd

FIG. 7.3A. SUPPRESSOR SYSTEMS

to vary the frequency rather than the amplitude of the carrier wave. It was expected originally that this method of modulation would lead to a reduction in the frequency band occupied by the modulated carrier, provided the frequency deviation caused by the modulating voltage was made less than the frequency of the latter, but analysis shows that whereas only

one pair of sidebands is produced by A.M. the number generated by F.M. is infinite. In practice only the sideband pairs relatively close to the carrier are of significant amplitude; even so, the total bandwidth occupied is greater than in A.M.

The relative nature of the methods may be understood more readily by comparing their vector equivalents. Thus in the case of single-tone A.M. the component frequencies, namely, f_c, $f_c + f_m$, and $f_c - f_m$, may be represented by three separate vectors rotating with corresponding angular velocities. From

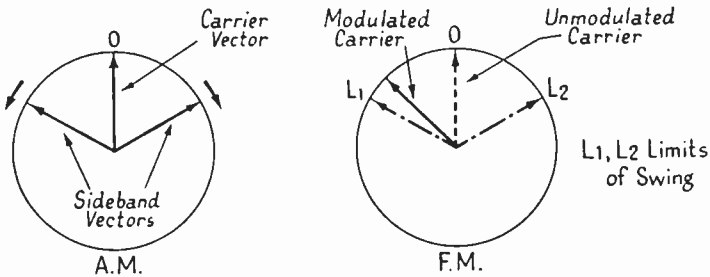

FIG. 7.4A. VECTORIAL COMPARISON OF AMPLITUDE AND FREQUENCY MODULATIONS

the point of view of an observer stationed on the carrier frequency vector, the two sideband vectors will appear to rotate with equal angular velocities but in opposite directions (i.e. one clockwise, the other anti-clockwise) as indicated in Fig. 7.4A. In the F.M. case an observer on a reference vector representing the unmodulated condition would see a single vector, representing the modulated carrier, swinging backwards and forwards over an angle proportional to the depth of modulation and with a frequency equal to that of the modulating voltage.

The principal advantages of maintaining constant carrier amplitude are, firstly, that the transmitter R.F. amplifiers do not have to handle increased amplitude voltage and current swings (up to double their normal (unmodulated) values) as in A.M. when modulation is applied, and secondly, the receiver amplifier may operate as an amplitude limiter and thereby

be made relatively insensitive to amplitude-varying interference signals.

The principal feature of an F.M. receiver is the different type of circuit needed for detection. An F.M. demodulator must provide an output voltage which is dependent on the frequency rather than the amplitude of the received R.F. signal, and frequency discriminators developed for automatic frequency control (A.F.C.) in superhet broadcast receivers are suitable for this purpose. The desired characteristic is shown in Fig. 7.4B together with the most commonly employed circuit. The characteristic relating input frequency and output voltage must be linear over the bandwidth it is desired to receive and should pass through zero voltage at the central frequency of the signal. The steeper the slope the greater will be the output for a given shift of signal frequency. Outside the desired band the curve should return rapidly to zero. The ideal response is not achieved in practice and the requirements are to some extent conflicting; an important point is the need for accurate alignment of the tuned circuit used to provide the characteristic. The principle of the Foster-Seeley arrangement given in the figure is the change in phase of the output of a fixed-tuned resonant circuit as the frequency of applied signal is varied. Referring to the circuit, which is shown in its simplest form, it will be noted that the last I.F. stage is bandpass coupled to the discriminator which consists of two diodes fed one from each end of the secondary tuned circuit and having their loads connected in series. In addition to the transformer coupling a voltage is capacitatively coupled from the anode of the driving valve to the centre-tap of the transformer secondary in order to establish a phase reference. When the primary and secondary circuits are both exactly in tune with the signal carrier the various voltages have the relative phases shown in the figure; the inputs to the two diodes are equal in amplitude, so the two output voltages developed across the series-connected loads will be equal and opposite and will therefore cancel out. If now the input frequency shifts, the voltages feeding the diodes will both shift relatively to the

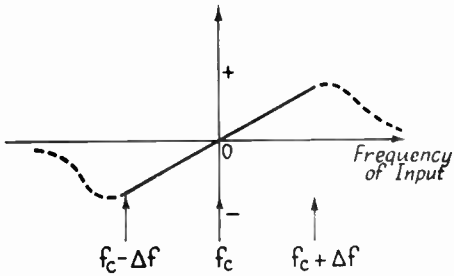

(i) Characteristics Required of the F.M. Detector ("Discriminator")

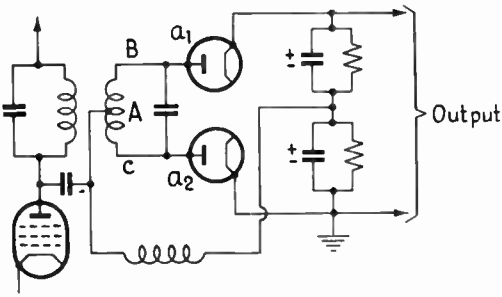

(ii) Basic Circuit of the Most Common Discriminator (*Foster-Seeley*)

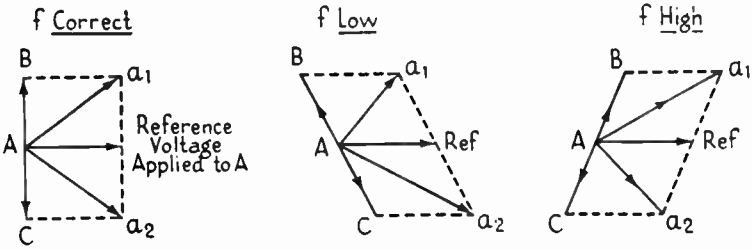

(iii) Vector Diagrams of Discriminator (ii) Action

FIG. 7.4B. THE FREQUENCY-MODULATION DETECTOR OR DISCRIMINATOR

reference voltage, and the input to one diode will increase and that to the other diode will decrease, thus providing a direct output voltage proportional in magnitude to the signal frequency shift and of polarity corresponding to the direction of shift. An opposite change of input frequency will cause the polarity of the output voltage to reverse. The need for A.F.C.

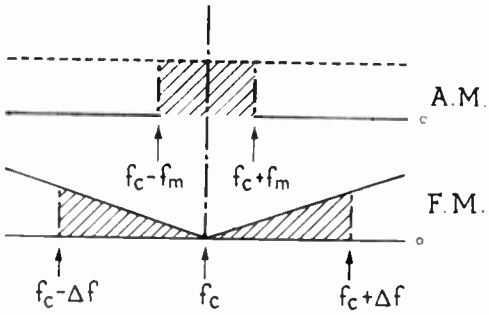

(i) Comparison of Noise Characteristics of A.& F.M. Receivers

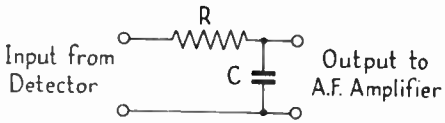

(ii) A Simple De-emphasis Network

FIG. 7.4C*

in F.M. receivers will be evident; it can easily be provided—the discriminator is already available—but it is often omitted because the reactance valve needed leads to additional expense. Suitable forms of "magic eye" indicator are often provided to facilitate the precise tuning required.

The degree of amplification in the early stages of the F.M. receiver must be sufficient to provide adequate input to the limiting stage, so that the limiter operates effectively and provides a constant-amplitude input to the discriminator. Usually two limiting valves in cascade are necessary and the grid-limiting type is most popular.

* In the case of the American transmission the maximum frequency deviation is 25 Kc/s and the CR of the de-emphasis circuit is 75 μsec.

An interesting secondary feature of F.M. is the use of high-note emphasis at the transmitter and corresponding de-emphasis at the receiver. The amplitude of the noise input to a receiver is normally practically independent of frequency throughout its acceptance band. The discriminator circuit will therefore, assuming a flat receiver frequency response,

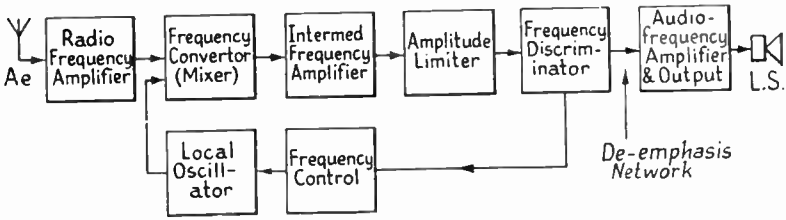

FIG. 7.4D. BLOCK SCHEMATIC OF SUPERHET CIRCUIT FOR F.M. RECEIVER HAVING AUTOMATIC FREQUENCY CONTROL OF THE LOCAL OSCILLATOR

provide a noise output which (in the presence of a carrier signal) increases linearly from zero for noise of the same frequency as the signal carrier. The noise output spectrum is therefore triangular, as shown in Fig. 7.4C. In order to offset this effect the transmitter modulator is given a rising frequency characteristic and at the receiver balance is restored by passing

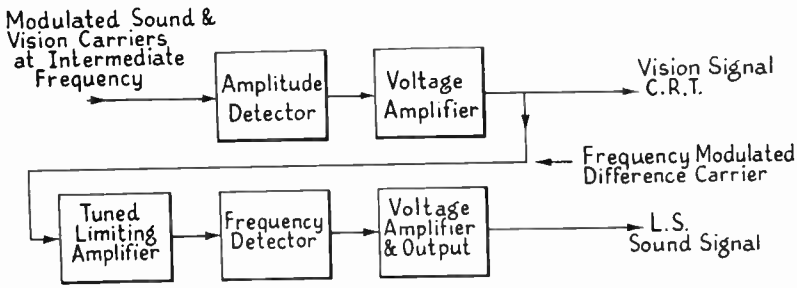

FIG. 7.4E. CARRIER-DIFFERENCE RECEPTION OF F.M. SOUND SIGNAL

the demodulated signal through a *CR* integrator. The block schematic of a complete F.M. receiver is shown in Fig. 7.4D.

CARRIER-DIFFERENCE F.M. RECEPTION. A description has recently been published[8] of a modified method of receiving the American F.M. sound transmission. A common superhet

is used for both sound and vision signals so that at the output of the detector the F.M. sound signal appears on the difference carrier which is produced by heterodyne action between the two received carriers. The frequency of this new carrier is 4·5 Mc/s. It is filtered off at the V.F. amplifier output and passed through a buffer amplifier to a conventional F.M. detector from which stage the remainder of the circuit may be as usual. The principal advantages of this method are a small reduction in overall receiver cost, together with elimination of the local oscillator drift problem in so far as it affects the sound channel (Fig. 7.4E).

7.5. Pulse Modulation. A continuous radio-frequency wave is characterized by its frequency, phase, and amplitude, all of which are constant in the unmodulated condition, and it is well known that any one of these three parameters may be varied in order to transmit intelligence. It is not necessary for the R.F. carrier to be continuous, however, and there are advantages in the use of a repetitive R.F. pulse, i.e. an R.F. wave which is periodically switched on and off. It is important to note that an R.F. pulse train of constant recurrence frequency and indefinite duration does not by itself convey intelligence even though by demodulation it provides a wave having the same shape as the envelope of the R.F. pulse wave. In the case of R.F. pulses of square form, i.e. of constant amplitude during the pulse, several possible methods of modulation are feasible. Successive pulses may be varied progressively in amplitude, in recurrence frequency, in width, or in position relative to the mean condition. In width modulation both edges of the pulses may be shifted so that the average position of the pulses remains unchanged; alternatively, the timing of one edge may be fixed and the timing of the other edge varied. So far no generally accepted nomenclature for these various methods has been adopted although several schemes have been suggested. The important feature of pulse modulation is the possibility of transmitting simultaneously several sets of pulses having the same P.R.F. on a single channel, simply by spacing them out in time to avoid overlapping;

this technique is called the time allocation method of multiplex communication.

Returning to the problem of television sound transmission, it will be clear that the line synchronizing pulses, in periodically cutting off the transmission (in the British case) makes it possible to insert a narrow pulse in each line synchronizing interval and the train of pulses so formed may be modulated

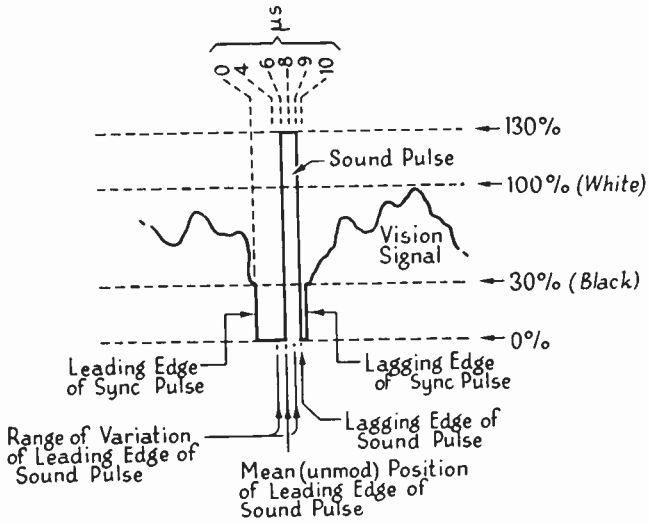

FIG. 7.5A. METHOD OF MODULATION USED IN THE PYE "VIDEOSONIC" SYSTEM

to convey the sound signal. In the Pye "Videosonic" system the additional pulses rise above the 100 per cent (actually to about 130 per cent) level representing maximum spot brightness and can therefore be clipped off in a circuit of the type used to separate the synchronizing pulses. Modulation is achieved by varying the phasing of the leading edge of the pulse which is always terminated 1 μsec before the end of the line synchronizing pulse. The sound pulses vary in width between the limits 1–5 μsec so that the mean, unmodulated, width is 3 μsec. Mathematical analysis of the modulated pulse shows that the resultant spectrum has as its lowest frequency component a wave of modulation frequency varying in amplitude with the

pulse width; in other words, a low-pass filter which cuts off just above the modulation frequency provides an output similar to the original modulating wave.* The modulation is shown in Fig. 7.5A and the skeleton Pye circuit in Fig. 7.5B.

The output of the detector of the common vision receiver is fed with the picture modulation and sound pulses in negative polarity to the left-hand section of the double-triode where it is amplified and inverted and then fed to the grid of the right-hand section through a long time-constant *CR* coupling. The

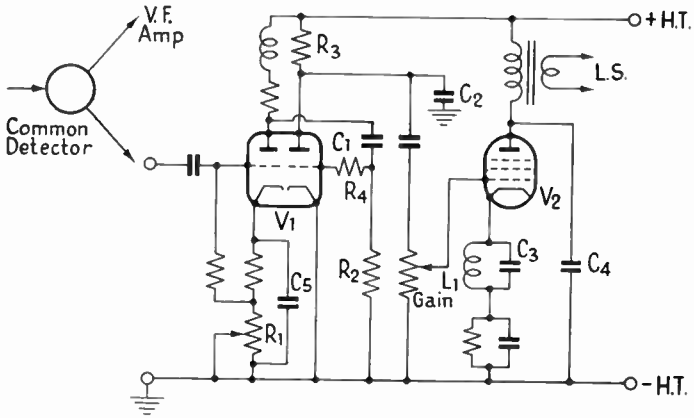

FIG. 7.5B. CIRCUIT FOR PYE SOUND-ON-VISION SIGNAL
(*Courtesy of Pye, Ltd.*)

sound pulses draw pulses of grid current into the coupling capacitor and the mean negative bias so produced effectively d.c. restores the signal in the negative direction. The grid base of the valve is short compared with the signal amplitude, so that only the sound pulses rise above the anode current cut-off bias level. The low-pass filter needed to eliminate all frequency components of the width-modulated pulses except the one at modulation frequency should have a cut-off frequency a little greater than half of the line frequency (i.e. $\frac{1}{2} \times 10{,}125 = 5012{\cdot}5$ c/s ≈ 5 kc/s). The filtering is achieved partly by the negative feedback due to the rejector circuit connected in the cathode lead of the output stage and partly by the inte-

* See Appendix I (§ A 1.8).

grator circuit R_2C_1 in the coupling between V_1 and V_2. The rejector circuit is tuned to line frequency but is sufficiently flat to eliminate undesired frequencies in the band 5–10 kc/s, while the integrator filters off the higher frequency components. Cut-off at 5 kc/s is sharpened by tuning the leakage inductance of the output transformer by the addition of C_4.

Among the advantages claimed for this method are—

(i) The sound receiver is simpler and cheaper than in A.M. or F.M.

(ii) The separate sound transmitter is eliminated.[9, 10, 11, 12, 13, 14, 15, 16]

BIBLIOGRAPHY

(1) EAGLESFIELD, C. C. Motor-car Ignition Interference. *W.E.* Oct. (1946) 265.

(2) FLACH, W. I. Electrical Interference Suppression in Television Receivers. *E.E.* Oct. (1947) 326.

(3) DENT, H. B. Noise Limiters. *W.W.* Dec. (1946) 397.

(4) HUND, A. Frequency Modulation. McGraw Hill (1942).

(5) STURLEY, K. R. *Frequency Modulation*, Electronic Engineering Monograph.

(6) TIBBS, C. E. *Frequency Modulation Engineering.* Chapman & Hall (1947).

(7) CROSBY, M. G. Frequency Modulation Noise Characteristics. *P.I.R.E.* April (1937) 472.

(8) DOME, R. B. Carrier-difference Reception of Television Sound. *E.* Jan. (1947), 102.

(9) "CATHODE-RAY." Pulse Modulation. *W.W.* April (1946) 113.

(10) ——. Pulse Width Modulation. *W.W.* Dec. (1945) 36.

(11) RODDAM, T. Noise and Pulse Modulation. *W.W.* Oct. (1946) 327.

(12) COOKE, D., JELONEK, Z., OXFORD, A. J., and FITCH, E. Pulse Communication. *J.I.E.E.* Pt. IIIA, 11 (1947) 83.

(13) KIRKE, H. L. The Application of Pulse Technique to Broadcasting. *B.B.C.Q.J.* 1 (1946) 139.

(14) KALLMAN, H. E. Audio and Video on a Single Carrier. *E.* May (1941) 39.

(15) LAWSON, D. I., LORD, A. V., and KHARBANDA, S. R. A Method of Transmitting Sound on the Vision Carrier of a Television System. *J.I.E.E.* Pt. III, July (1946) 251.

(16) FREDENDALL, G. L., SHLESINGER, K., and SCHROEDER, A. C. Transmission of Television Sound on the Picture Carrier. *P.I.R.E.* Feb. (1946) 49P.

CHAPTER VIII

THE COMPLETE RECEIVER

At the present time a wide variety of television receivers is being produced by commercial manufacturers both in this country and in the U.S.A. At the 1947 Radiolympia Exhibition, for example, some twenty-nine manufacturers were exhibiting forty-six different models. While the primary purpose of the present volume is the discussion of the principles of television reception technique and not the presentation of a collection of commercial circuits, it will be helpful to review the general features of receivers in current production and to describe typical complete circuit diagrams.

8.1. General Features of Commercial Television Receivers. One method of classification would be on the basis of the method of viewing the picture (Fig. 8.1A). In most cases the picture is viewed directly (except for the interposition of a protective screen of thick non-splinterable glass), in which case the tube is mounted horizontally, or with a slight upward tilt, and the outer side of the tube face is visible (through the protective plate) from in front of the set (Fig. 8.1B). A variation is provided by the Baird "Grosvenor" receiver, in which the picture is viewed from the gun side of the screen, as indicated in Fig. 8.1A. The indirectly-viewed tube arrangement divides into two categories. When a large cathode-ray tube is used it is mounted in the cabinet with the screen looking vertically upwards and is viewed in a large mirror mounted in the lid which is lifted up and fixed at an angle of 45° when the set is in use (Fig. 8.1C). Where a projection tube is employed, together with a spherical mirror, aspheric correcting plate and plane mirror, the image is projected through a large screen of special design (Fig. 8.1D); two possible methods of arranging the entire system have already been described in Chapter III. With regard to picture size the largest tubes for direct viewing

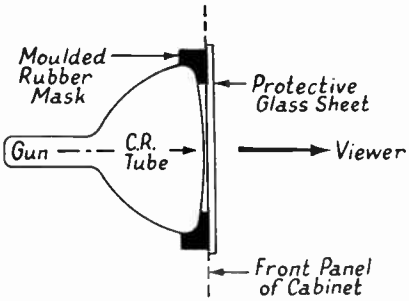

(i) The conventional method of viewing the Picture Tube (Non-projection Type)

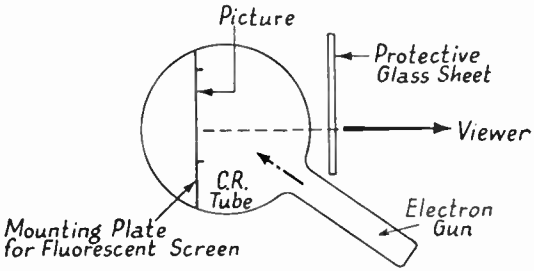

(ii) The Baird method of viewing the Fluorescent Screen from the Gun side. The oblique incidence of the Scanning Beam requires "keystone correction" of the raster, i.e. modulation of line amplitude at frame frequency, to produce rectangular shape

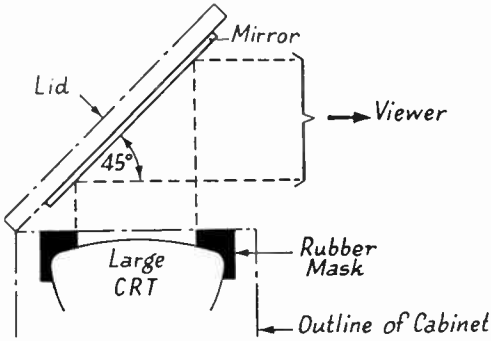

(iii) Use of a Reflecting Mirror (*See Fig.8.1C*)

FIG. 8.1A. THREE METHODS OF VIEWING NON-PROJECTION TYPE CATHODE-RAY TUBES

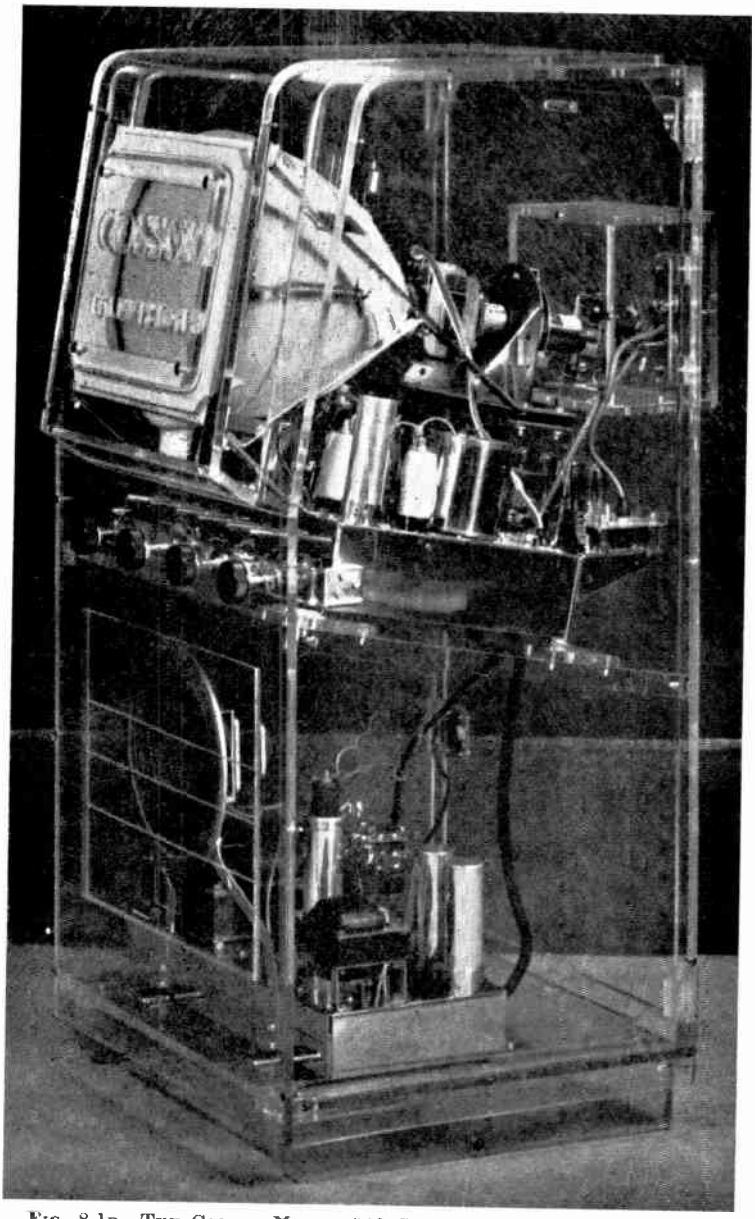

FIG. 8.1B. THE COSSOR MODEL 902 CONSOLE RECEIVER IN PLASTIC EXHIBITION CABINET

(Courtesy of A. C. Cossor, Ltd.)

in home receivers are 15 in. diameter. When larger pictures are desired the projection method is preferred and the few commercial projection models at present available provide pictures of the order of 20 in. width and corresponding height.

There are two widely-adopted methods of arranging the various units comprising the complete receiver. In table models

FIG. 8.1C. THE EKCO TSC 48 TELEVISION CONSOLE RECEIVER
(Courtesy of E. K. Cole, Ltd.)

the picture tube, which is usually of the directly viewed type having a screen diameter of 6 in. to 10 in., is mounted alongside the loudspeaker; the Pye Model B.16T shown on p. 234, Fig. 8.3A, is an example of this type. Most console models employ the larger type of directly-viewed tube (9 in. to 15 in. diameter) which is mounted above the loudspeaker at a suitable viewing level. The photograph of the Murphy Model V.116 on page 238 is typical of this arrangement. Some consoles are fitted with opening or sliding doors or a hinged flap so that the unsightly bare tube face may be covered when not in use.

Internal construction ranges from a single chassis carrying the complete circuit in table models, to a number of separate

units (sub-chassis) mounted around a box frame in console receivers. Examples of both these methods are given in the

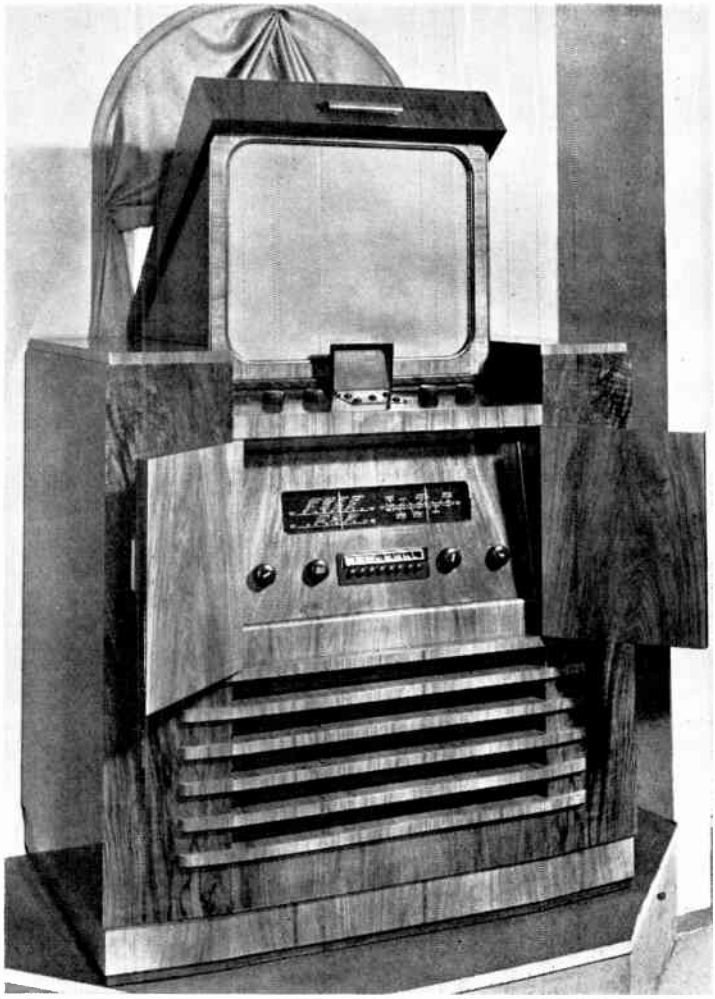

FIG. 8.1D. THE H.M.V. PROJECTION-TYPE TELEVISION RECEIVER
(Courtesy of The Gramophone Company, Ltd.)

illustrations included in this chapter. A typical subdivision of the complete circuit where separate units are preferred is as follows: aerial input panel, vision receiver, synchronizing and

scanning unit, sound receiver, sound output stage and loudspeaker, power unit.

Table models and the lower-priced consoles rarely provide more than television reception, but a large proportion of the more expensive sets include an all-wave broadcast receiver chassis having its own power supply so that it may be used independently of the television receiver when the latter is not required.[1, 2, 3, 4, 5, 6, 7]

8.2. Operation of the Receiver. The vision receiver requires the following controls—

Group 1
- STATION SELECTOR (except where only one station is catered for)
- FINE TUNING (in superhets only)

Group 2
- CONTRAST (varies gain)
- FOCUS
- BRIGHTNESS (or BRILLIANCE)

Group 3
- LINE HOLD (also called LINE- or HORIZONTAL-SYNCHRONIZATION)
- FRAME HOLD (also called FRAME- or VERTICAL-SYNCHRONIZATION)

Group 4
- PICTURE WIDTH (also called LINE- or HORIZONTAL-AMPLITUDE)
- PICTURE HEIGHT (also called FRAME- or VERTICAL-AMPLITUDE)

ON-OFF SWITCH (common to all circuits)

Of these the first group selects the desired station and where multiple station selection is used both sound and vision channels are tuned simultaneously by a continuously variable or stepped tuning control. British receivers rarely have any control over tuning—sometimes, in superhets, a fine tuning of the local oscillator is fitted. The second group controls the picture quality and includes the only controls normally made available as front-panel controls, the remainder being preset and hidden away under a flap, usually on one side of the cabinet. There is a trend towards making FOCUS and BRIGHTNESS into preset

controls, leaving only one control (CONTRAST) in addition to SOUND VOLUME and the common ON-OFF SWITCH. The hold controls are used to bring the scanning oscillator frequencies into synchronism with the received signal while the HEIGHT and WIDTH controls enable the deflection amplitudes to be set to make the picture size and shape match the rectangular mask over the tube face. American receivers usually have electrical control of picture centring and are more often fitted with time-base linearity controls than their British counterparts. The actual operation of the BRIGHTNESS and CONTRAST controls is not difficult once the preset controls are correctly adjusted. The latter process is carried out when the receiver is installed and is a matter of successive approximation. Provided the set is operating satisfactorily and receiving an adequate signal turning up of the BRIGHTNESS and CONTRAST controls will produce a bright, defocused raster modulated in a jumbled fashion and of incorrect size. After focusing, the size is adjusted by means of the HEIGHT and WIDTH controls to approximately the correct condition and the LINE and FRAME HOLD controls are then adjusted in turn until the picture is resolved, firstly in the horizontal direction and then vertically. The HEIGHT and WIDTH controls will then need to be increased to take up the size lost in obtaining synchronism. The CONTRAST and BRIGHTNESS controls, which had been well advanced to ensure getting a visible modulated raster, may then be brought to approximately their correct positions. In their effect on actual picture brightness they are of course interdependent, but for a given setting of the CONTRAST there will be a correct setting of the BRIGHTNESS, namely the reference provided by the pedestals at black level which should be just below visibility. The picture is now at the first stage of approximation and the various controls should now be systematically "touched up" until the correct settings are obtained. In this final process due regard must be taken of such interdependent quantities as picture size and linearity, brightness and focusing, etc., which should be thoroughly checked since they vary from receiver to receiver.

8.3. The Pye Model B16T Receiver. The Pye Model B16T has been chosen as a typical British table receiver of post-war design. The frontal appearance and chassis lay-out will be clear from the accompanying illustrations (Figs. 8.3A and 8.3B) and the complete circuit diagram is given in Fig. 8.3C.

The vision receiver is of the T.R.F. type and employs four stages of amplification, in each of which a Mullard valve, type E.F.50, is used. The aerial feeder is matched into the input circuit of the first stage by tapping into the grid inductor. The VISION SENSITIVITY control, which varies both control and suppressor-grid potentials in correct proportion to minimize change of valve input impedance with gain, is used to preset the gain to approximately the required level. Fine control of gain for front-panel adjustment of picture contrast is achieved by a control (CONTRAST) operating in a similar circuit which is common to both the second and third stages. The interstage couplings are all of the bandpass type and are "staggered" to receive both sidebands of the signal. Transmission of the sound signal through this amplifier chain is made negligible by the insertion of parallel tuned rejectors in the cathode circuits of the third and fourth stages. The detector is a simple half-wave diode circuit and has an inductively compensated load. The video amplifier is directly coupled to the cathode of the picture tube, thus avoiding the need for a d.c. restorer. The choice of cathode drive of the tube requires a negative-going picture signal at the amplifier anode and necessitates the use of sufficient cathode resistance to bias the grid back toward the bottom end of the I_a–V_g characteristic in order to accommodate the positive-going input. This allows the use of appreciable frequency-selective negative feedback from the cathode circuit and it will be noted that a small capacitor connected across the bias resistor provides further H.F. compensation by making the cathode load impedance fall with increasing frequency. The rising A.F. response caused by the insertion of a 5·6 kΩ, 16 μF decoupling filter in the V.F. anode circuit is compensated by the inclusion of a parallel *CR* circuit of similar time constant (47 kΩ, 2 μF)

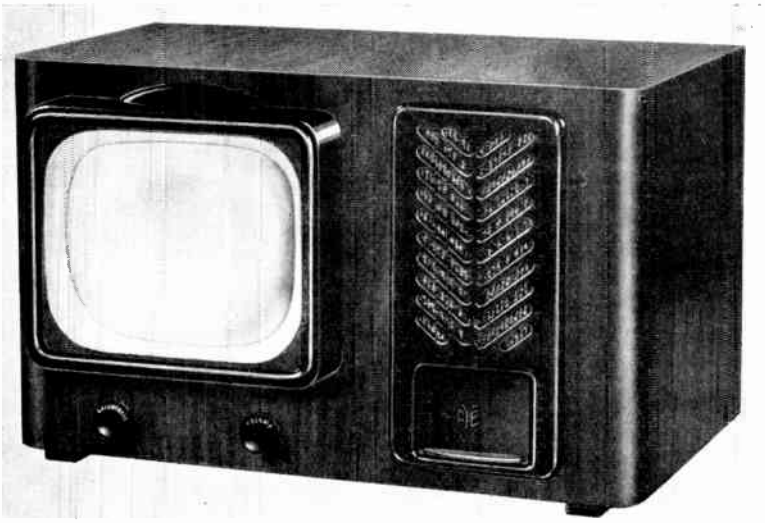

FIG. 8.3A. THE PYE B16T TELEVISION RECEIVER
(*Courtesy of Pye, Ltd.*)

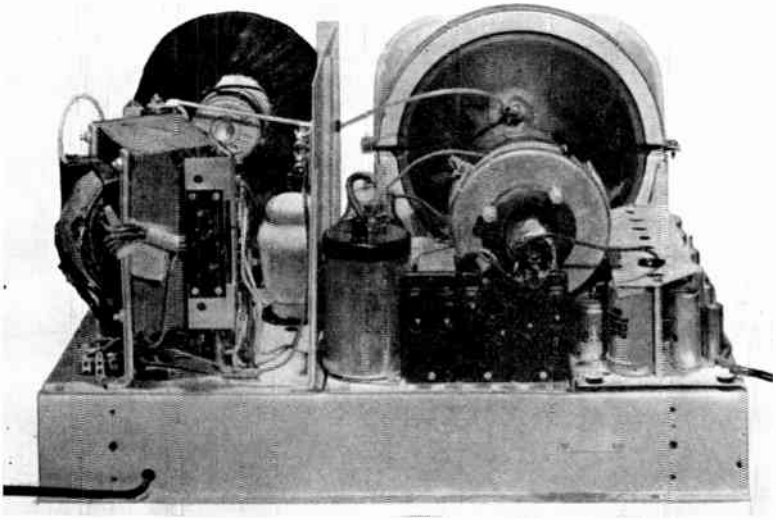

FIG. 8.3B. THE CHASSIS OF THE PYE MODEL B16T RECEIVER
(*Courtesy of Pye, Ltd.*)

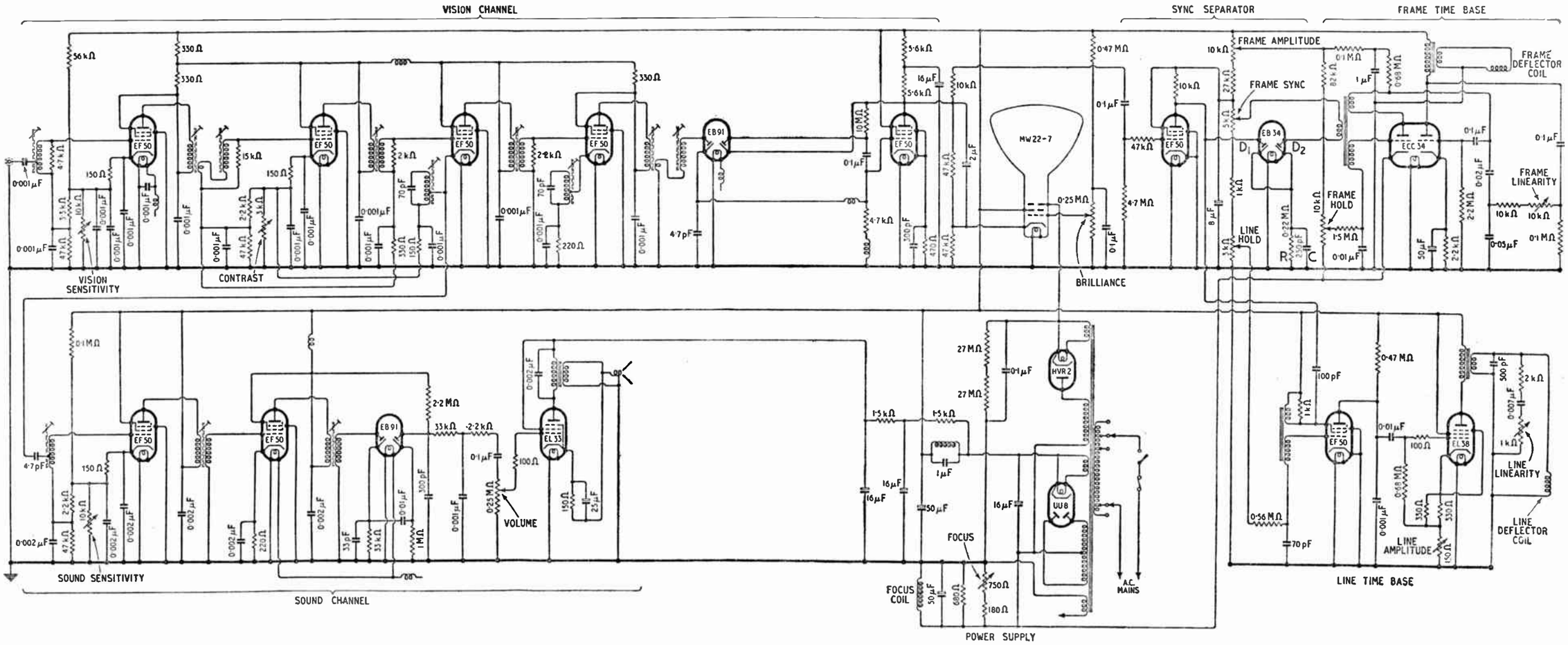

(T 575)

FIG. 8.3c. THE CIRCUIT DIAGRAM OF THE PYE MODEL B16T RECEIVER

(Courtesy of Pye, Ltd., and "Wireless World")

in the signal path to the tube cathode. The grid of the tube is set to a lower potential than the cathode by a potentiometer (BRILLIANCE) connected across the H.T. supply. Should the anode current of the V.F. valve fail the tube cathode will rise to a much higher value, thus increasing the tube bias. The right-hand diode of the EB91 is operated so that it is normally non-conductive but when a large-amplitude interfering pulse appears at the diode cathode the diode conducts heavily and effectively couples the V.F. amplifier anode back to its grid through the 0·1 μF capacitor. The resultant negative feedback attenuates the interfering signal considerably. The 10 MΩ resistor not only provides a negative bias for the diode anode, which bias varies with the signal amplitude, but, together with the 0·1 μF feedback capacitor it forms a long time constant coupling which prevents the diode anode from following a rapid change of V.F. anode voltage. The suppressor is therefore sensitive to rate of change of input which is an advantage in the case of sharp interfering pulses.

The synchronizing separator is of the anode-current cut-off type and is automatically biased by pulses of grid current drawn into the coupling capacitor by the positive-going synchronizing pulses received from the V.F. amplifier anode. The grid-cathode portion of the separator therefore acts as a d.c. restorer and an additional diode for this purpose is unnecessary. The principle of the framing pulse separator has already been described (Chapter V). The frame time base uses two triodes in a common envelope. The left-hand triode operates in a conventional blocking oscillator fed through an integrator from a variable (FRAME AMPLITUDE) positive supply potential. The "free-running" frequency of this oscillator is controlled (FRAME HOLD) by varying the positive potential applied to the "earthy" end of the grid leak (1·5 MΩ). The charging capacitor, across which the sawtooth wave is generated, is split to allow feedback by the Blumlein method (described in Chapter IV) from the anode of the output valve. The latter is a triode (the right-hand portion of the ECC34 double-triode) operating in a simple circuit; it drives the low

impedance frame-deflector inductors through a step-down transformer.

In the line time base the sawtooth generator is of the blocking oscillator type and uses the screen circuit for providing the feedback voltage, thus leaving the anode circuit free for the charging *CR* circuit. The feedback transformer is arranged as a differentiating transformer for the line synchronizing pulses, which are supplied through a small capacitor from the synchronizing separator anode. The line output stage is of conventional design. It will be noted that a preset linearity control is provided and amplitude is adjusted by controllable cathode-current feedback.

Only two bandpass coupled E.F.50 signal amplifiers are needed in the sound channel because the first two stages of the video chain provide considerable amplification of the sound signal, which is fed to the sound channel from the cathode of the third stage of the video chain. The gain level required to suit the prevailing signal level in the particular locality in which the receiver is installed is set by the "SOUND SENSITIVITY" control in the cathode circuit of the first sound R.F. amplifier, while the fine panel control (SOUND VOLUME) controls the amplitude of the A.F. voltage supplied to the grid of the pentode output stage. A diode noise gate is inserted in the signal path between the detector cathode and output valve grid. The anode bias, which sets the signal level at which the gate opens, is made to follow the mean A.F. signal amplitude by the 2·2 MΩ, 300 *p*F *CR* combination. The voltage developed across the output transformer feeding the loudspeaker is included in the output-valve cathode circuit to provide negative feedback. The common H.T. supply is conventional while the E.H.T. supply employs a simple half-wave circuit.

8.4. The Ekco Model T.S.46 Receiver. The Ekco Model T.S.46 is another example of postwar table-model design. The block schematic of this receiver is given in Fig. 8.4A and an illustration of the set in Fig. 8.4B. This receiver is the first British set to use an R.F. oscillator (frequency 140 kc/s) for the E.H.T. supply. Another feature is the use of a bridged-T

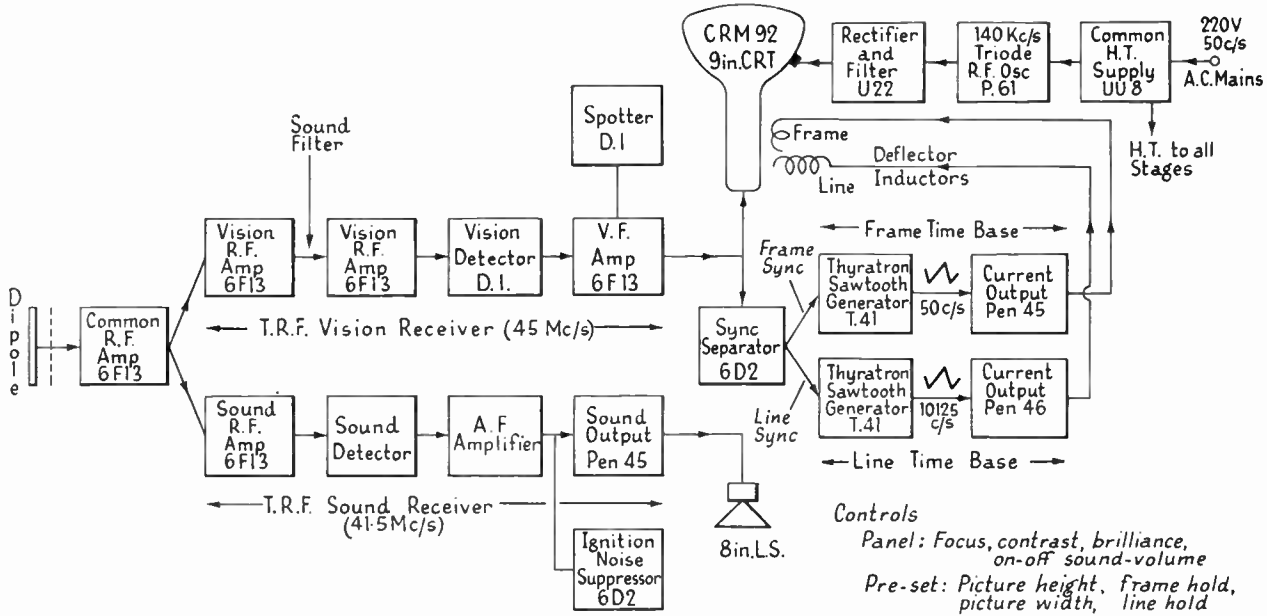

FIG. 8.4A. BLOCK SCHEMATIC OF THE EKCO MODEL T.S.46 RECEIVER

(*Courtesy of E. K. Cole, Ltd.*)

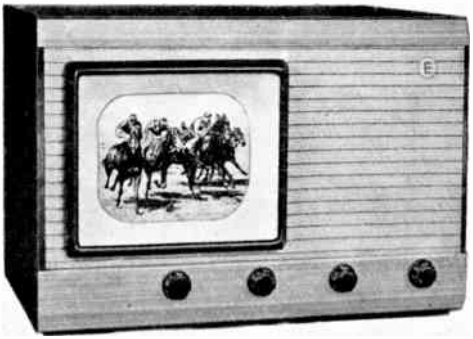

FIG. 8.4B. THE EKCO MODEL T.S.46 RECEIVER
(*Courtesy of E. K. Cole, Ltd.*)

FIG. 8.5A. THE MURPHY MODEL V.116 CONSOLE RECEIVER
(*Courtesy of Murphy Radio, Ltd.*)

sound filter between the second and third R.F. amplifiers of the vision receiver.

8.5. The Murphy Model V.114, 116 Receiver. The Murphy receivers provide an excellent contrast to the Pye Model B.16T. It is constructed on a unit basis (see cabinet and chassis

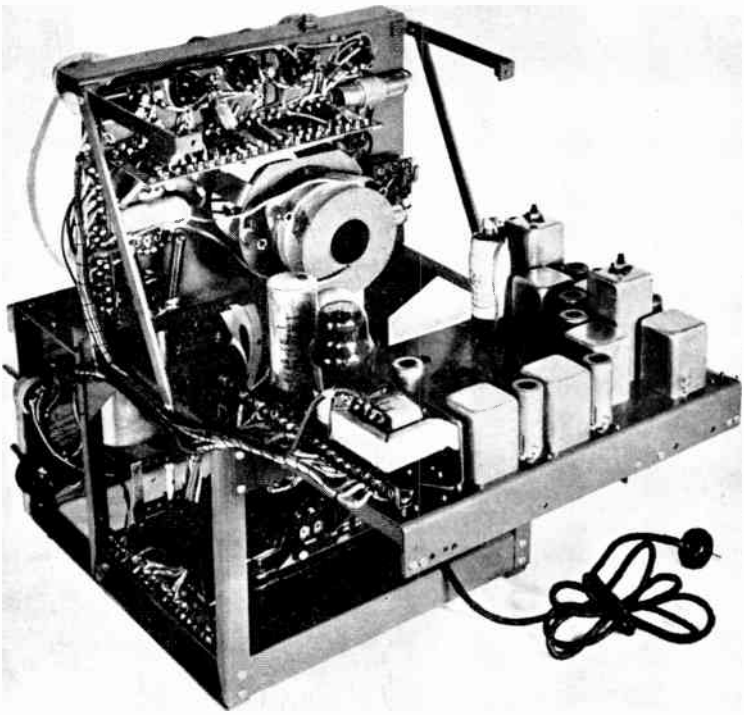

FIG. 8.5B. THE CHASSIS OF THE MURPHY V.114 TABLE RECEIVER
(Courtesy of Murphy Radio, Ltd.)

illustrations, Figs. 8.5A and 8.5B) and assembled in table and console versions. The receiver is of the superhet type and Thyratron generators are used in the scanning circuits. Special features of the circuit are the double-diode mixers and the method of ignition interference suppression used in the sound receiver, both of which have already been described (Chapters VI, VII respectively). A 12 in. tube (Mazda CRM121) provides a 10 in. × 8 in. picture.

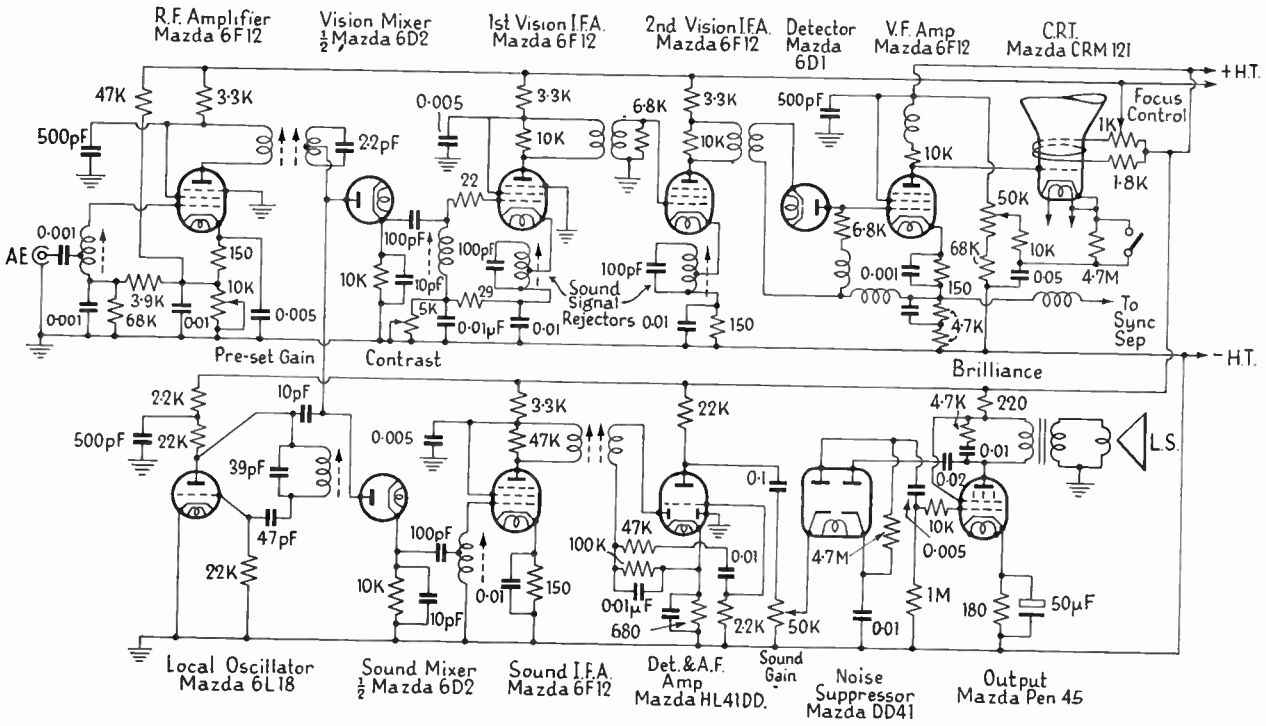

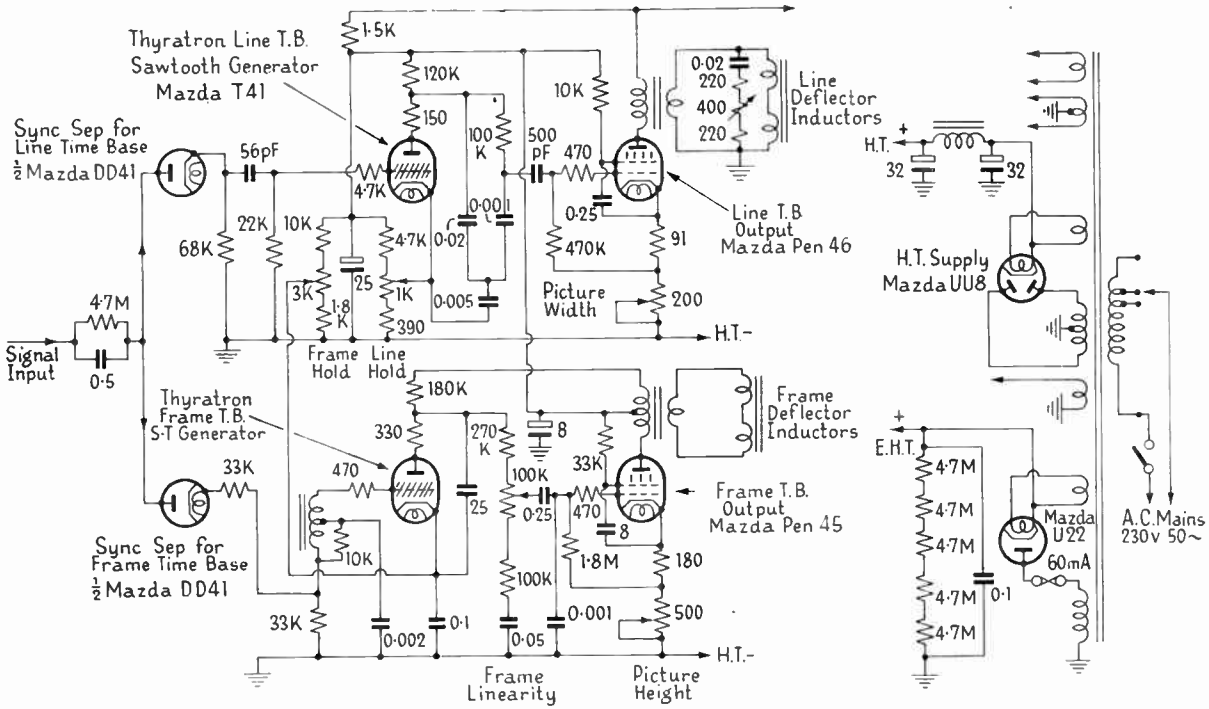

FIG. 8.5c. THE COMPLETE CIRCUIT DIAGRAM OF THE MURPHY RECEIVERS V.114 AND V.116

(Courtesy of Murphy Radio, Ltd.)

Referring to the complete circuit diagram (Fig. 8.5c) it will be seen that a single R.F. stage, which is common to both sound and vision channels, drives two parallel mixing diodes, one of which feeds a two-stage vision I.F. amplifier (I.F. 13·5 Mc/s) and the other a single-stage sound I.F. amplifier (I.F. 10·0 Mc/s). All the signal couplings are of the bandpass type. Both vision I.F. amplifiers have negative feedback rejectors tuned to the sound I.F. in their cathode circuits. The method of gain control is similar to that adopted in the Pye receiver in that the main control operates on the first R.F. stage while the panel "CONTRAST" control acts upon a later stage—in this case on the first I.F. amplifier. The 6L18 triode Colpitts oscillator feeds in parallel with the R.F. signal to the two diode mixers. Space is saved in the sound receiver by the choice of a double-diode-triode (Mazda HL 41DD) for detection and A.F. amplification and of a double-diode (Mazda DD41) for the noise suppression circuit; the latter stage should be compared with Fig. 7.3A. Both the video detector (Mazda 6D1) and the video amplifier have inductive H.F. compensation of their loads. The latter stage is directly coupled to the C.R.T. grid and feeds the synchronizing separator from its cathode where feedback which decreases with increase of frequency is used to provide further H.F. compensation. Electrically separate diodes contained in a common envelope are used for synchronizing separation; both are of the series type. The upper diode feeds the line time-base Thyratron generator through a *CR* differentiator while the lower one applies the synchronizing voltage to a damped resonant-circuit type of pulse-width discriminator working on the principle described in Chapter V. The two Thyratron generators are of straightforward design, but Hawkins integrating-type linearity correctors are inserted in the couplings to the output valves. Both output valves feed low-impedance saddle-type deflector inductors through step-down transformers and have their outputs controlled by current feedback from a variable resistor in the cathode circuit. A common H.T. supply is used for all the low-voltage circuits and the cathode-ray tube accelerating

voltage is developed in a separate half-wave circuit fed from the same power transformer.

8.6. The Sobell T.107 Console Receiver. The Sobell T.107 is typical of the class of receiver containing an all-wave superhet broadcast receiver (see Fig. 8.6A). The complete block schematic of the circuit is shown in Fig. 8.6B. Completely separate straight circuits are employed for television sound and vision reception and both are fitted with diode interference suppressors. Four valves are employed in the synchronizing systems to ensure satisfactory synchronism. The time bases are straightforward Thyratron-oscillator tetrode-output combinations using the same valves and similar circuits to those of the Murphy receiver described in the last section. The broadcast receiver is a three-waveband five-stage superhet. An interesting feature is the combination of a light-ray tuning indicator with a dial engraved on a flap which may be drawn out of a recess above the picture tube when the latter is not in use and dropped over the tube face. The light ray which is projected upwards from a rotatable lens assembly mounted just below the tube face may then be rotated behind the circular tuning scales carried on the cover flap.

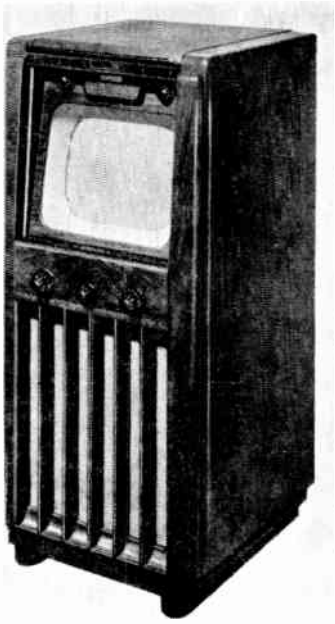

FIG. 8.6A. THE SOBELL MODEL T.107 CONSOLE TELEVISION AND ALL-WAVE BROADCAST RECEIVER
(Courtesy of Sobell Industries, Ltd.)

8.7. The R.C.A. 7 in. Table Model Receiver. The R.C.A. 7 in. table model receiver (1946–7) is representative of American practice. The R.F. unit, comprising an R.F. amplifier, mixer, and local oscillator, all of which are push-pull circuits employing

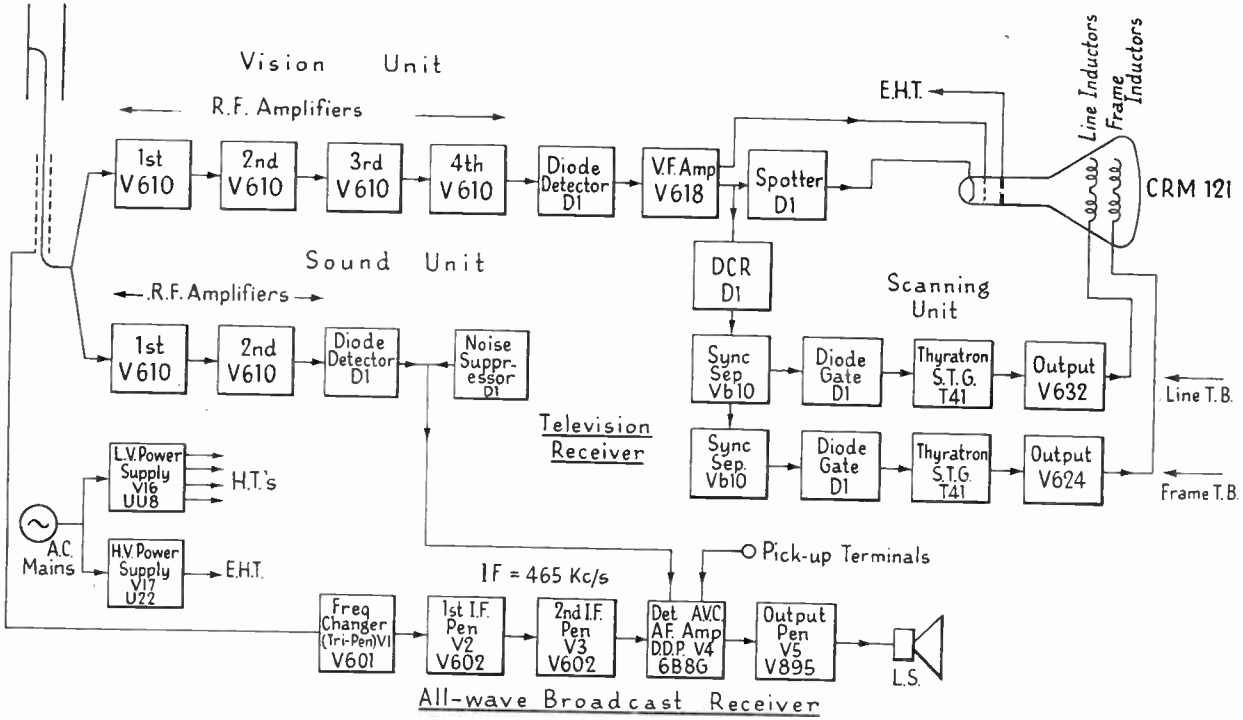

FIG. 8.6B. COMPLETE BLOCK SCHEMATIC OF THE SOBELL TELEVISION AND BROADCAST RECEIVER

(Courtesy of Sobell Industries, Ltd.)

the 6J6 double U.H.F. triode, has been described already in Chapter VI. It can be tuned to any one of the thirteen standard channels. The remainder of the circuit diagram is given in Fig. 8.7A.

The limiting amplifier of the F.M. sound receiver employs two bandpass-coupled pentode stages which feed a Foster-Seeley type discriminator. The latter uses diode portions of separate double-diode-triodes (6AT6) and the triode section of one of these valves amplifies the A.F. signal before it is applied to the 6K6–GT pentode output stage which drives a 6 in. moving-coil loudspeaker.

Three tuned-anode 6AG5 amplifiers are used for I.F. amplification in the video receiver and the third has a negative-feedback type tuned (to the sound I.F. of 21·25 Mc/s) rejector circuit in its cathode lead. The half-wave diode detector has a H.F compensated anode load. Two triode amplifiers contained in a common envelope (6SN7–GT) amplify the demodulated signal. The first V.F. amplifier grid is d.c. coupled to the detector anode, and the second anode is directly connected to the picture-tube grid; the d.c. component lost over the *CR* coupling between the first anode and second grid is restored by the grid current drawn into the coupling capacitor by the positive-going synchronizing pulses.

The signal required by the synchronizing separator is tapped from the compensated load of the final V.F. amplifier and fed to another double-triode; the first section provides further amplification and the second removes the picture signal, all of which lies beyond the anode current cut-off level. The d.c. component of the signal disappears in the coupling between the two triodes and is re-established by one-half of a 6H6 double-diode. The separator is loaded in its cathode circuit and feeds the two time-base generators from different taps.

The framing component of the synchronizing signal is accentuated by three integrating sections in cascade and fed to the grid of the triode discharge valve of the frame oscillator over the back-coupling transformer needed to make the discharger self-triggering. The oscillator is therefore of the

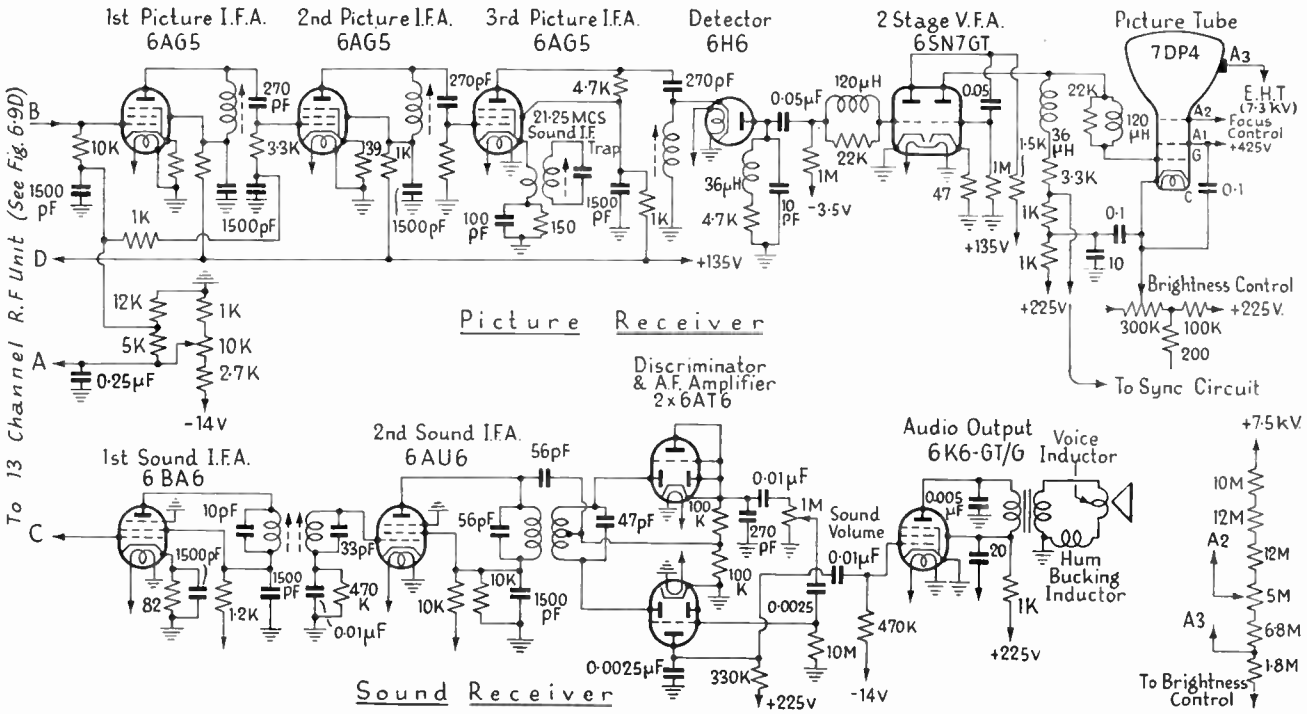

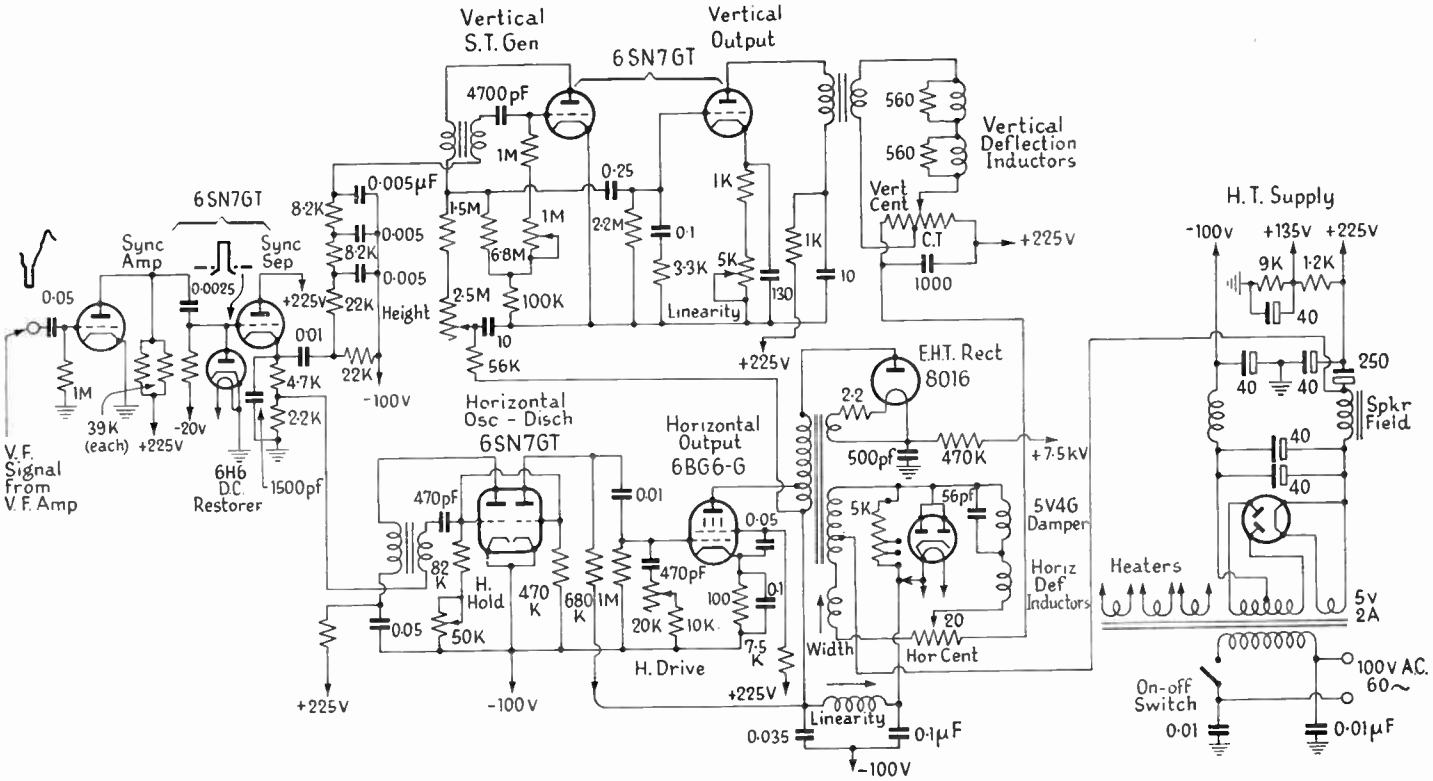

FIG. 8.7A. COMPLETE CIRCUIT DIAGRAM OF THE R.C.A. 7 IN. RECEIVER (1946), OMITTING THE R.F. UNIT (SEE FIG. 6.9D)

(Courtesy of R.C.A., Ltd.)

blocking type and its output is controlled in frequency by a variable grid-leak resistor and in amplitude by a variable charging resistor. The discharge valve is actually one-half of a 6SN7GT and its output is fed by a *CR* coupling to the other half which drives the frame deflector inductors through a step-down transformer connected in its anode circuit. The bias of the

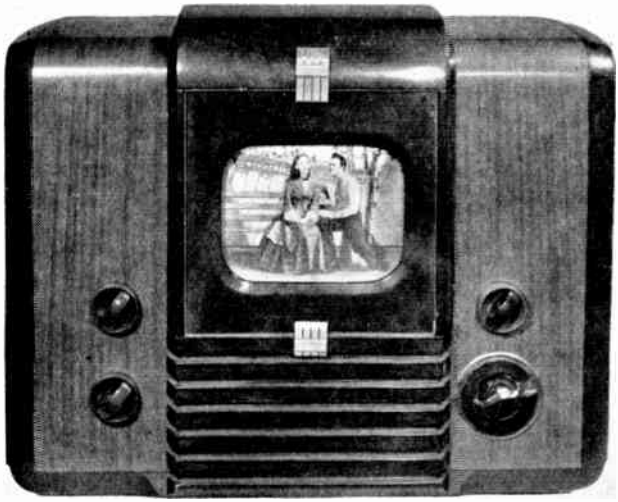

FIG. 8.7B. THE R.C.A. 7 IN. TABLE RECEIVER
(*Courtesy of R.C.A., Ltd.*)

output triode is adjustable to allow linearity control by varying that part of the I_a–V_g characteristic traversed by the input voltage wave. The deflector inductors are damped by parallel resistors. The steady current needed for vertical centring is taken from the H.T. supply and injected into the inductor circuit through a variably tapped resistor which controls the shift current both in strength and direction.

In the line time-base generator the functions of trigger-pulse generation and sawtooth-forming capacitor discharge are performed by two electrically separate triodes mounted in the same envelope (6SN7GT). The line synchronizing pulses are taken from the tapped cathode resistor of the separator and

applied to the blocking oscillator through the feedback transformer. The output valve is a 6B6-G tetrode having a top-cap anode. The sawtooth input to its grid is made variable in amplitude for picture width control. The step-down transformer in the anode circuit feeds the two horizontal deflection windings and a controllable shift current for horizontal centring

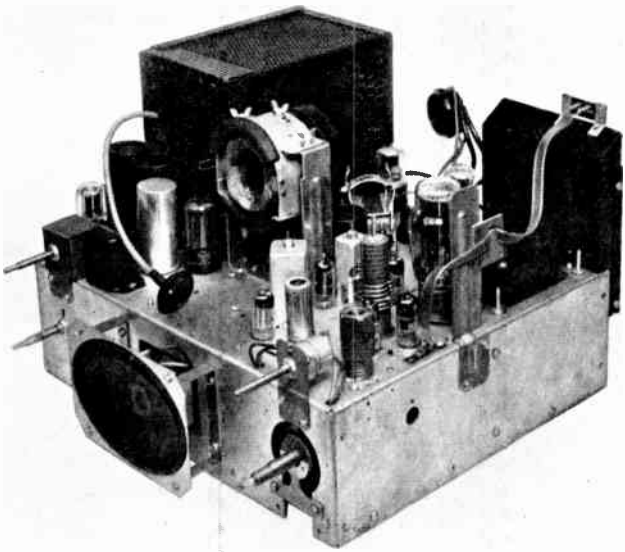

FIG. 8.7c. THE CHASSIS OF THE R.C.A. 7 IN. TABLE RECEIVER
(*Courtesy of R.C.A., Ltd.*)

is injected in the same manner as in the frame circuit. The 5V4G double-diode not only damps the circuit during the flyback but improves the efficiency of the circuit by converting part of the flyback energy into additional ("boost") voltage of about 50 V for the anode of the 6B6G driver. A portion of the flyback energy is recovered also in the E.H.T. supply which takes the flyback pulse wave generated in the transformer primary, rectifies it by a H.W. high-voltage diode rectifier (8016) and smoothes the resulting direct voltage to 7·5 kV for the final anode of the picture tube. H.T. to all stages is provided by a conventional circuit which employs a 5U4G full-wave rectifier.

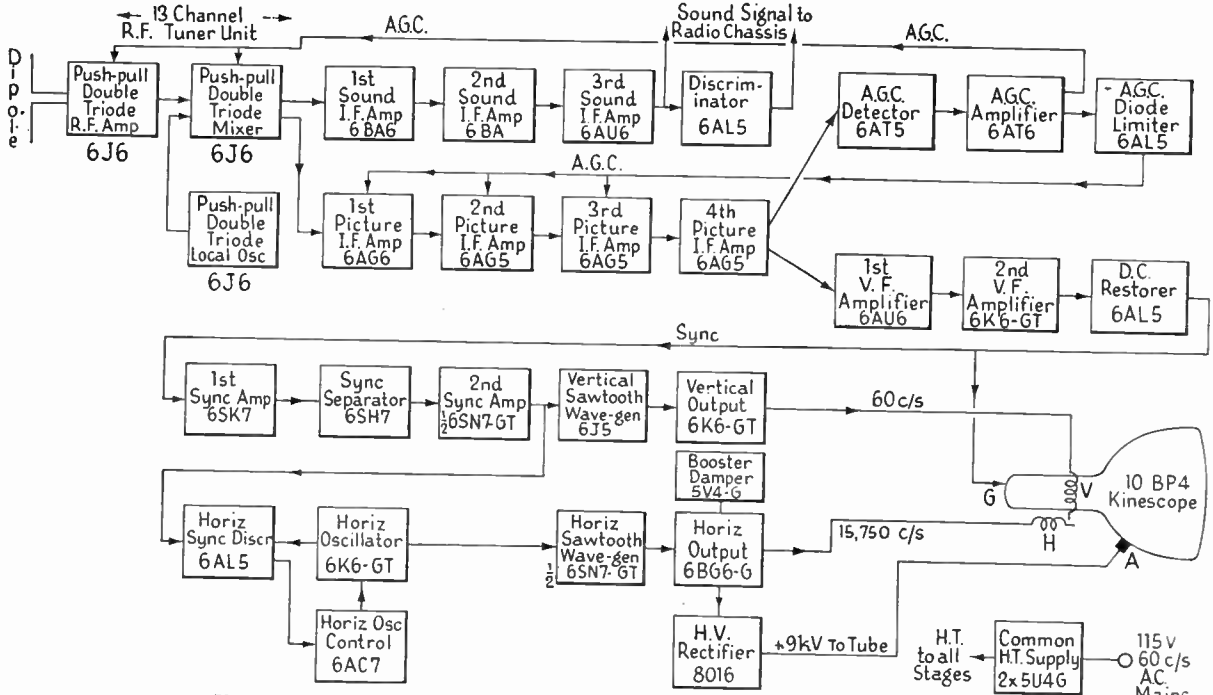

FIG. 8.8A. BLOCK SCHEMATIC OF THE R.C.A. COMBINATION CONSOLE MODEL

(Courtesy of R.C.A., Ltd.)

8.8. The R.C.A. Combination Console Receiver. The television circuits of the R.C.A. combination (television-radio-gramo-

FIG. 8.8B. THE R.C.A. COMBINATION CONSOLE RECEIVER (PROJECTION MODEL)
(Courtesy of R.C.A., Ltd.)

phone) console are much more elaborate than those of the table model described in the last section. While the R.F. unit is the same as used in the table model, both I.F. amplifiers contain

an additional valve and separate pentodes replace the double-triode in the V.F. amplifier. The additional circuits are used to provide A.G.C. on the vision receiver and automatic control of horizontal synchronism. A separate detector is used in the A.G.C. circuit; its output is amplified and applied directly to the first and second I.F. amplifiers and through a limiter

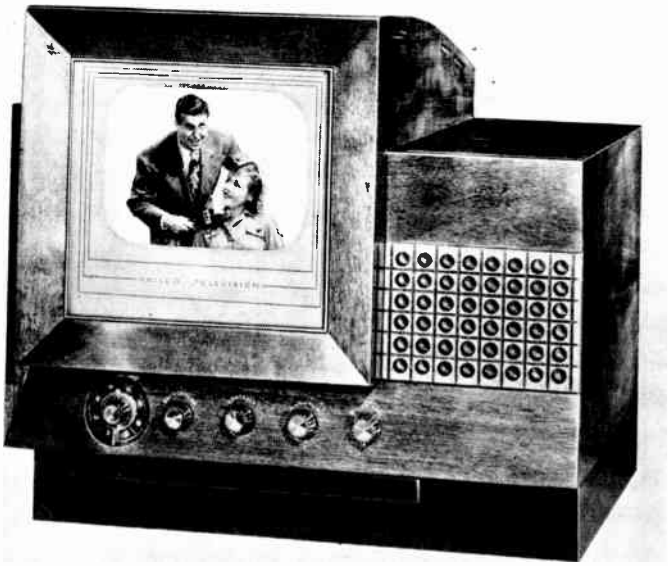

FIG. 8.9A. THE PHILCO MODEL 48–1000 RECEIVER
(Courtesy of the Philco Corp., Ltd.)

to the signal amplifier and mixer in the R.F. Unit. The V.F. signal is amplified both before and after separation and separate valves are used in each stage. The frame time base is very similar in circuit detail to that of the 7 in. receiver, but a pentode output valve is needed to provide sufficient output for scanning the larger (10 in.) tube. The automatic synchronizing circuit was described in Chapter V. The line time base differs from that shown in Fig. 8.7A only in having a separate pentode and triode in the sawtooth generator instead of the double-triode: the pentode is the reactance-controlled oscillator. The increased number of valves calls for a larger

power supply and two 5U4G's are paralleled in the rectifier circuit.

8.9. The Philco Model 48-1000 Receiver. One of the most advanced receiver chassis in current production is that fitted

FIG. 8.9B. THE PHILCO MODEL 48–2500 CONSOLE PROJECTION RECEIVER
(Picture size: 20 in. × 15 in.)
(Courtesy of the Philco Corp., Ltd.)

in the Philco Table Model Type 48–1000 receiver (Fig. 8.9A); a similar circuit is employed in the Console Projection Model Type 48–2500 (Fig. 8.9B). The general scheme of the circuit design will be clear from the circuit diagram given at Fig. 8.9D. In view of the ultimate possibility of seven stations being available in certain areas the receiver is of the superhet type;

the video and audio chains divide after the first I.F. amplifier. Both A.G.C. and A.F.C. are provided. Special features of the scanning circuits are the use of "flyback E.H.T." and of a "booster-damper" valve in the line time base.

Referring to the complete circuit diagram (Fig. 8.9D) it will be noted that two ganged eight-way turrets are employed to select the inductors required for the channel it is desired to

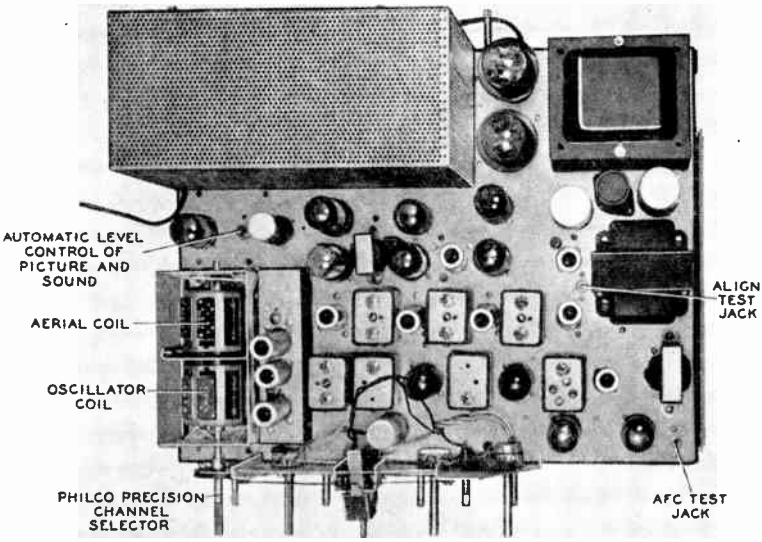

FIG. 8.9C. TOP VIEW OF THE PHILCO RECEIVER CHASSIS
(Courtesy of Philco Corp., Ltd.)

receive; one changes the tuned input transformer of the R.F. amplifier (6AG5), the other switches the tuning and coupling circuits of the local oscillator ($\frac{1}{2}$6J6). The signal and the locally-generated oscillation are added together by connecting an inductor coupled to the oscillator into the lead from the R.F. amplifier anode to the control grid of the mixer (6AG5). The oscillator is of the Colpitts type and uses one section of a 6J6 U.H.F. type double-triode; the other portion of this valve is arranged as a variable reactance and is coupled to the oscillator so that any change in the grid potential of the reactance valve shifts the oscillator frequency. The actual

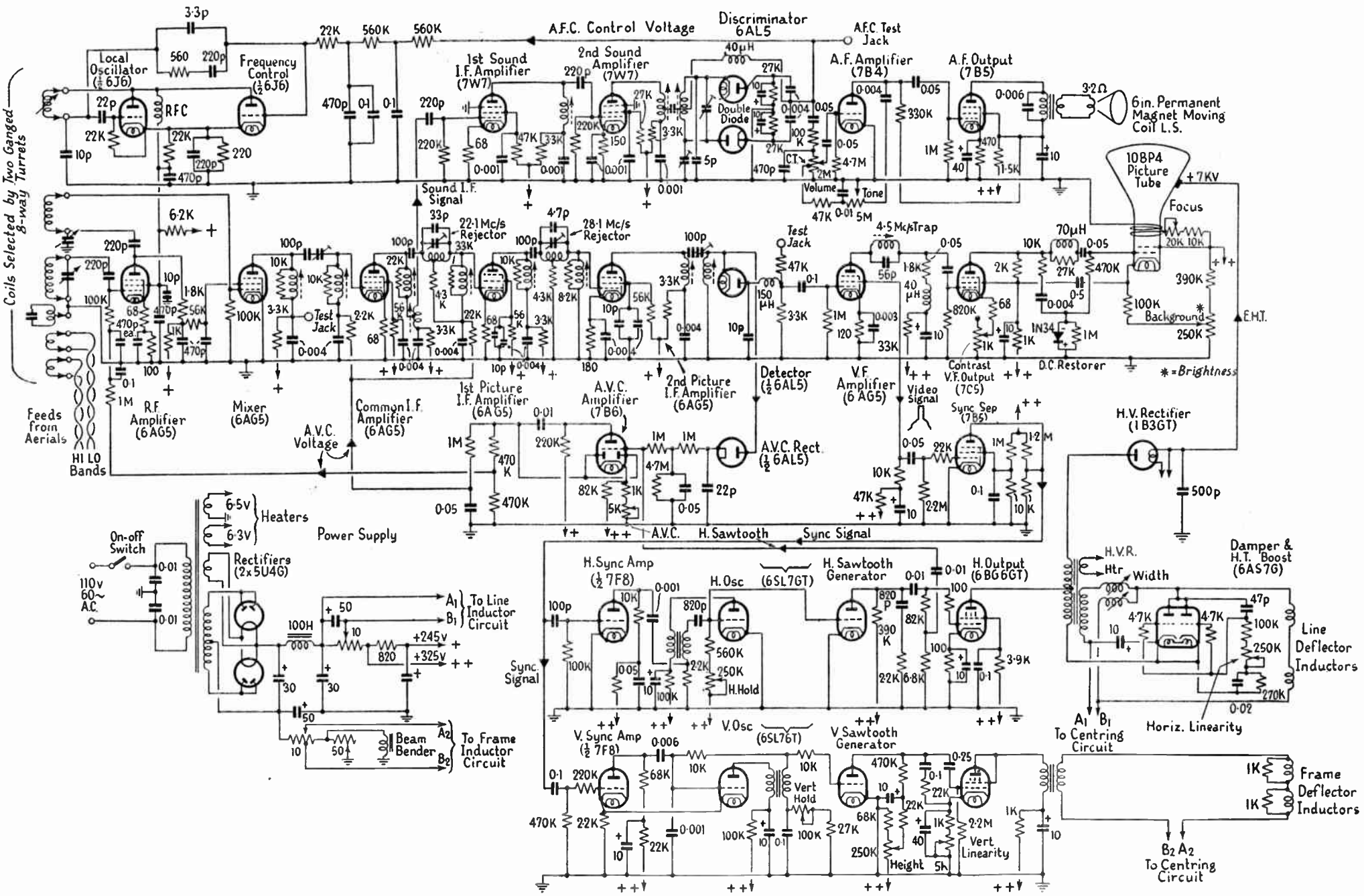

(T.575) FIG. 8.9D. THE COMPLETE CIRCUIT DIAGRAM OF THE PHILCO TELEVISION RECEIVER MODEL 48–1000 254

(Courtesy of Philco Corporation)

control voltage is supplied by the discriminator in the sound channel (which, of course, handles an F.M. signal) and tends to keep the intermediate frequencies (26·6 Mc/s for vision and 22·1 Mc/s for sound) constant. Both I.F.'s are handled by the first amplifier (6AG5) following the mixer valve, but beyond this stage the signal paths divide.

The limiting amplifier in the audio signal channel employs two 7W7 pentodes with simple permeability-tuned couplings, both peaked to 22·1 Mc/s. The discriminator is a modified form of the Foster-Seeley type circuit; it supplies a control voltage to the oscillator and a controllable ("VOLUME") audio signal to a 7B4 triode amplifier which provides adequate drive for the 7B5 pentode output stage, feeding the 6 in. permanent-magnet type moving-coil loudspeaker.

The common I.F. amplifier is followed in the video signal chain by two further stages of amplification, using 6AG5 pentodes. Each interstage coupling network consists of two damped permeability-tuned parallel *LC* circuits separated by a bridged-T resistance-tuned wave filter designed to have a sharp attenuation peak. The first filter tunes out the I.F. due to the sound carrier of the next lower television transmission (28·1 Mc/s), while the second filters off the sound I.F. of the channel being received (22·1 Mc/s). The various tuned circuits in the video I.F. amplifier are staggered to produce the required overall response curve (p. 191). The last tuned I.F. circuits feed two detectors in parallel and the two diodes employed are contained in a common envelope (6AL5). The output of one is smoothed by a *CR* filter to produce a voltage representative of the prevailing signal strength which is used to vary the gain of the A.G.C. triode amplifier valve. The method of A.G.C. employed is unusual, for the input to the amplifier is a sawtooth wave taken from the line time base generator. The output of the A.G.C. amplifier is, therefore, a sawtooth wave having an amplitude corresponding to the strength of the received signal. This wave is rectified by two parallel diodes elements contained in the same envelope as the A.G.C. amplifier, and the negative potential so produced is

smoothed and fed back to reduce the gain of the R.F. amplifier, common I.F. amplifier, and first video I.F. amplifier.

The other detector diode is fed at its cathode to provide a negative signal for the first V.F. amplifier (6AG5). The coupling to the grid of this valve includes a single-section R.F. filter and a rejector circuit tuned to the carrier difference frequency (i.e. $26{\cdot}6 - 22{\cdot}1 = 4{\cdot}5$ Mc/s) is connected in the anode lead. The loss of the d.c. component of the video signal over the coupling capacitor to the next valve is prevented by operating the latter with a little fixed bias so that the positive-going synchronizing pulses draw grid current which re-establishes the direct component by building up a steady charge in the coupling capacitor. The coupling from the V.F. output amplifier (7C5) is inductively compensated by an inductor in series with the C.R.T. grid lead. The d.c. restorer circuit is unusual; the anode load of the V.F. amplifier is split to allow the 1N34 crystal rectifier to be separately fed and the rectified output is smoothed and connected in series with the V.F. signal transferred over a *CR* coupling from the other portion of the anode load.

The video signal required by the synchronizing circuit is taken from the screen of the first V.F. amplifier. At this point the synchronizing pulses are positive-going and it is convenient to operate the common separator valve (7B5) as a clipper by making use of grid-current, no d.c. restorer being necessary; the synchronizing pulses draw grid current which builds up a d.c. component and the input amplitude is so large compared with the grid base of the valve that the entire picture signal lies beyond anode current cut-off. The separated synchronizing signal is transferred by simple *CR* coupling from the anode circuit to two parallel-triode amplifiers (one feeding each time base) housed in a common envelope (7F8). The amplifier feeding the vertical sawtooth generator is coupled to it through a single-section *CR* integrator having a split capacitor, while the line synchronizing amplifier is coupled to its time-base generator through a short-time-constant *CR* system.

Both time-base generators are of the double-triode type,

in which the oscillator and discharge functions are separated while both output stages use a pentode and step-down transformer. E.H.T. (7·3 kV) for the 10 in. cathode-ray tube (10BP4) is derived from the flyback pulse developed in the anode circuit of the line output valve. The double-triode (6AS7G) in the line deflector inductor circuit provides "boost" for the line output valve H.T. supply and damps the flyback. It also conducts on the forward scan during which it is grid-controlled in such a manner that the linearity is improved.

Focusing of the picture tube is achieved by a combination of the electromagnetic and magnetostatic methods and an ion trap ("beam bender") is fitted. The H.T. supply is straightforward but the heavy drain caused by the large number of stages used calls for two 5U4G type rectifiers.

BIBLIOGRAPHY

(1) EDWARDS, B. J. The Design of Television Receiving Apparatus. *J.I.E.E.*, Pt. III. Sept. (1941) 191.
(2) ——. Pye Television Model B.16T. *W.W.* Dec. (1946) 403.
(3) ——. Bush Television Model T.91. *W.W.* Sept. (1947) 323.
(4) PUGSLEY, D. W. Postwar Television Receivers. *E.Eng.* March (1947) 249.
(5) WRIGHT, A. Television Receivers. *R.R.* March (1947) 5.
(6) ——. Philco Projection T.V. Receiver. *T.T.* March (1947) 41.
(7) ——. 1947 Radiolympia Reports: *E.E.* 348, *W.E.* 333, *W.W.* 426, Nov. (1947).

CHAPTER IX

THE RECEIVING AERIAL SYSTEM

In view of the comparatively short range of U.H.F. signals, and the wide bandwidth of the vision signal, the receiving aerial needs more consideration than in broadcast reception and a special type of aerial is needed for satisfactory reception.

9.1. Aerial Principles. The television receiving aerial system is quite different in form from the kind of aerial used for normal broadcast reception, due largely to the much smaller carrier wavelength employed, but it is based on exactly the same principles. These may be stated generally as follows—

(i) When a conductor of any kind is placed in the path of a passing electromagnetic (i.e. radio) wave, it has a similarly varying current induced in it.

(ii) This induced current will increase (at any rate up to a point, as will appear later) with the length of the conductor, and, for a given length, will be greatest—

(*a*) when it lies parallel to the lines of electric force of the wave; this will usually be vertically (or nearly so), since most transmitting aerials are vertical and therefore transmit a vertically polarized wave; and,

(*b*) when it is made to resonate with the oncoming wave.

(iii) An improved overall response can be obtained by combining the pick-up of several separate conductors to form an "array."

In the case of a normal broadcast aerial, these principles cannot be fully exploited. Thus, if a straight wire is taken, as a start, and suspended vertically to correspond with the direction of the electric wave field, the current induced in it will increase continuously with increase in length until the latter becomes very nearly equal to one-half of the wavelength of the oncoming radiation. This progressive increase is due to two facts:

(*a*) the wire intercepts a larger portion of the received energy; and

(*b*) its resonant frequency is approaching that of the wave.

Taking 10 m (= 39·4 ft) as about the maximum height for a home aerial, it will be clear that for wavelengths considerably greater than this, such a vertical wire will represent a quite inefficient aerial, chiefly because it is far from being in tune. There are three ways of improving its efficiency—

(i) The lower end may be earthed. So far the effect of the earth has been ignored; actually, it forms a mirror image of the vertical wire so that when the lower end of the wire is earthed, its effective length is doubled. The height now required for resonance is $\lambda/4$, where λ denotes wavelength.

(ii) The upper end may be connected to a horizontal conductor, e.g. at its centre, thus forming the familiar T aerial, or at one end, making an inverted L.

(iii) A "loading" inductor may be inserted in series with the vertical wire, at its earthed end.

In practice, at normal broadcast wavelengths, all three methods (which are designed chiefly to bring the aerial system closer to resonance) are used. The height is made as large as possible, the largest convenient "capacity top" is added, a sufficiently large inductance to bring the whole system to approximately the desired frequency is included between the aerial and earth terminals of the receiver circuit, and a variable capacitor is placed in parallel with the inductance for final tuning (see Fig. 9.1A).

This loading of the vertical wire to form a relatively compact receiving system on medium and long wavebands and its similarity to the basic parallel *LC* tuning circuit has become so familiar that one may have forgotten the ability of a straight conductor to resonate at any one of a number of harmonically related frequencies, but it should be understood that the normal broadcast aerial is fundamentally a straight wire aerial modified to make it of convenient size, and when the wavelength is sufficiently small these modifications may with advantage be discarded. This property is, of course, due to the fact that

any conductor, although straight, and however short, must possess inductance; the latter will, of course, be small, hence the use of a long wire formed into a coil when large inductance is required. Again, capacitance will exist between points at

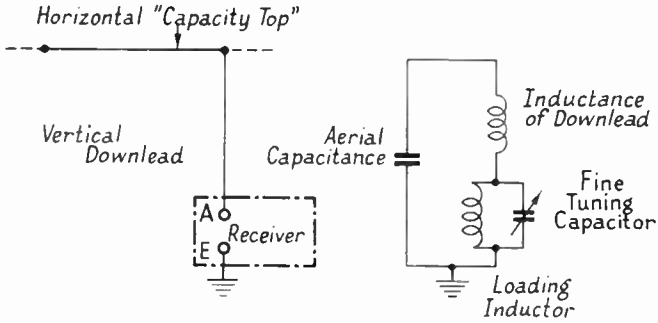

FIG. 9.1A. THE NORMAL BROADCAST (MARCONI) AERIAL AND THE EQUIVALENT CIRCUIT

different potentials, which p.d. will inevitably occur—if only because of inductance of the portion of the conductor joining the two points. Hence an approximate equivalent circuit of a straight wire can be drawn as shown in Fig. 9.1B. The

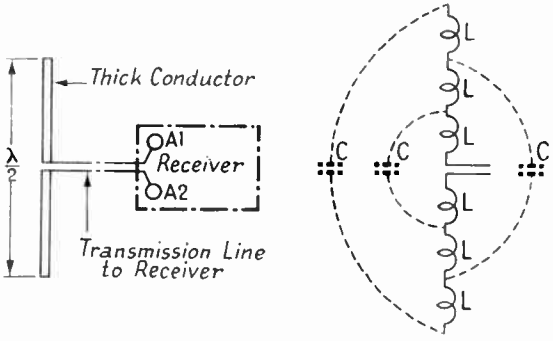

FIG. 9.1B. THE DIPOLE (HERTZ) AERIAL AND THE EQUIVALENT CIRCUIT

closeness of approximation improves as the inductances and capacitances are made smaller and increased in number.

It is not so obvious that the relationship between the natural frequency of resonance of a straight conductor and its length should be so simple, although it is perhaps reasonable that

such a conductor will respond most to a wave of given length if it (the wire) extends in space over one complete range (in one direction or the other) of variation, i.e. over one-half cycle of the wave field. There is an alternative way of regarding the straight wire resonator which will help the understanding of the relationship which will be given in a later section.

9.2. The Dipole Aerial.[1, 2] Returning now to the case of television reception, it will be obvious that the small wavelength employed allows the use of a straight conductor type of aerial, unearthed, and unloaded by L or C, and, moreover, that such an aerial will be inherently efficient. Another factor facilitating the use of such an aerial is the need, to date, of receiving only one television transmission to which the aerial may, therefore, be tuned. On the other hand, the television aerial must respond over a band of several megacycles to allow reception of both audio and video signals without appreciable loss of the side-bands contained in the latter signal. It will be shown later that the television wavelength is sufficiently small to allow the use of two or more receiving conductors, thus making a simple array—this, of course, although desirable, is quite out of the question on medium and long wavelengths.

Current and Voltage Distribution: Impedance. Having developed the simple straight resonant-wire aerial, sometimes called a Hertz, but more usually a dipole aerial, from the loaded or Marconi type of Fig. 9.1A, it is important to study in detail the fundamentally different action of the former. In a tuned circuit, oscillating at a normal broadcast frequency, the amplitude of the current variation is the same throughout the circuit, i.e. at any point in the inductor or the lead from it to the parallel capacitor. This result is due to the fact that the magnetic field of the inductor is localized and separated from the electrostatic field which is largely confined to the space between the capacitor plates. When, as in the dipole aerial, the two fields are spread over a large space and occupy it together, they interact and cause the current amplitudes in the conductors to vary approximately sinusoidally along their lengths. The case of the half-wave dipole, which is the simplest

case of a "distributed L and C" circuit, is shown in Fig. 9.2A. When the dipole is set into vibration (electrically) by the oncoming wave to which it is tuned (by virtue of its length) the current and voltage amplitudes along it are as plotted for instants spread 90° apart through a whole cycle. This result can be understood by reference to Fig. 9.1B. Since all the constituent inductances and capacitances take part together in the oscillation *all* the component currents charging and discharging the elementary capacitances will pass through the

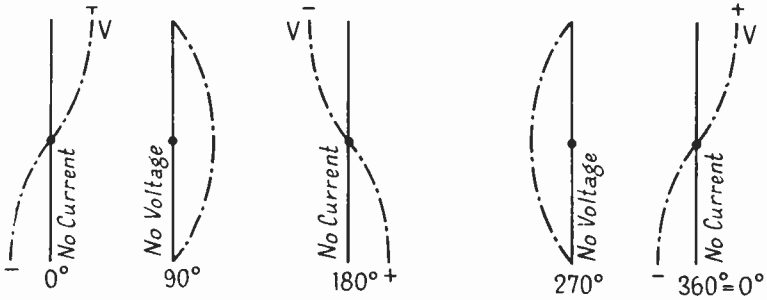

FIG. 9.2A. VOLTAGE AND CURRENT DISTRIBUTION ALONG A HALF-WAVE DIPOLE AT INSTANTS SPACED 90° THROUGHOUT THE CYCLE

centre point of the conductor where current amplitude will be greatest. From this point outwards the total current will decrease due to the "tapping off" by the individual capacitances. As for voltage, the component voltages over the elementary inductances are in phase and add up to give maximum voltage swings at the ends of the dipole and minimum voltage swing at the centre. Accordingly, the dipole impedance is minimum, actually about 73 Ω, at its centre and greatest (about 4000 Ω) at its ends. This impedance is nearly purely resistive at the centre and ends, but has a large reactive component at intermediate points. The actual impedance values depend chiefly on the thickness of the conductor.

BANDWIDTH. The effective bandwidth of the dipole also depends on its thickness. It might be expected that increasing the thickness would lead to lower resistance and, therefore, lower loss and a more peaky response. This resistance change does occur but, due to the high frequency involved, its effect

is swamped by the change of L/C ratio. As the wire is thickened its capacitance per unit length *increases* and inductance per unit length decreases so that the equivalent L/C of the aerial falls and its response broadens despite the small drop in its resistance. For sufficiently wide response for television reception the dipole diameter must not be less than about $\frac{3}{8}$ in.

THE FOLDED DIPOLE. While the centre-point resistance of the simple dipole is of a convenient value for direct connection to a feeder of the coaxial type it may be desired to use a feeder of the air-spaced twin type which has a much higher characteristic impedance than a comparable coaxial cable. In this case a folded dipole is suitable; an additional dipole is placed a small fraction of a wavelength away from the original dipole and is connected directly to the latter at both ends (see Fig. 9.2B). For equal diameters the input resistance is multiplied four times (i.e. to about 300 Ω); by the use of unequal diameters the multiplication factor may be raised to 8 or more. The folded dipole with similar diameter elements is commonly used for F.M. and television reception in the U.S.A.

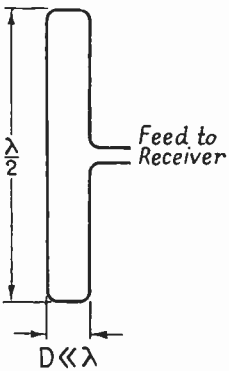

FIG. 9.2B. THE FOLDED DIPOLE IS FORMED BY CONNECTING A SECOND ELEMENT IN PARALLEL WITH THE SINGLE CENTRE-FED DIPOLE

If both elements are of the same diameter the input impedance becomes about 300 Ω.

POLAR DIAGRAMS.* When isolated in free space (this simplification avoids the effect of earthy objects) the dipole (single or folded) is most sensitive in the direction normal to its length; along its axis it picks up no energy at all. More generally, in the plane containing the dipole the sensitivity is represented by a "figure eight" polar diagram, as shown in Fig. 9.2C, while in the normal plane the corresponding diagram is a circle. In the practical case of a dipole mounted close to the earth's surface, the latter forms an image of the actual dipole, which must be taken into account in computing the polar diagrams. Two principal factors govern these diagrams, namely

* See Appendix 1 (§ A 1.9).

the orientation of the dipole and its height, both relative to the earth. It is not necessary to make a detailed study of the polar characteristics obtainable by varying these factors, since the receiving dipole should be placed to correspond with the electric polarization of the incoming wave and at as great a height as possible to ensure maximum signal pick-up. In this country vertical polarization was chosen; more recent investigations have led the Americans to adopt horizontal polarization.

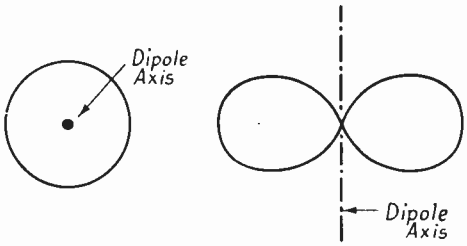

FIG. 9.2c. POLAR DIAGRAMS OF THE DIPOLE (SIMPLE OR FOLDED) IN FREE SPACE, I.E. OUTSIDE THE EFFECT OF THE EARTH

chiefly because it is less susceptible to interference, which is generally vertically polarized.

9.3. The Reflector. Thus far an aerial consisting of a (single or folded) dipole only has been considered. While such an aerial is efficient and is used for television reception, it has the disadvantage (while the single-station condition remains) of being omnidirectional. If the directional property could be modified to make the dipole considerably more sensitive in one direction than in others, not only would its "gain" be correspondingly increased but it would be less susceptible to undesired interference. The most serious types of interference encountered are ignition interference from motor cars and multiple-path reception (due chiefly to wave reflection from adjoining buildings) of the signal.

It is well known that if two or more dipoles are suitably placed and intercoupled an additive response and restricted angle of reception may be achieved—this fact underlies the design of the "arrays" used in S.W. transmission. While the economics of television reception preclude the use of a multi-element array, the desirable properties just mentioned can be

achieved in some measure by the addition of a second dipole. If this element is placed $\lambda/4$ behind the normal dipole and parallel to it, the element will have current induced in it which will set up a field in direct opposition to the received wave field, which has already gone through $\lambda/4$ since passing the normal dipole. Since the new field has to travel back $\lambda/4$ to the normal dipole, it arrives in phase with the radiation

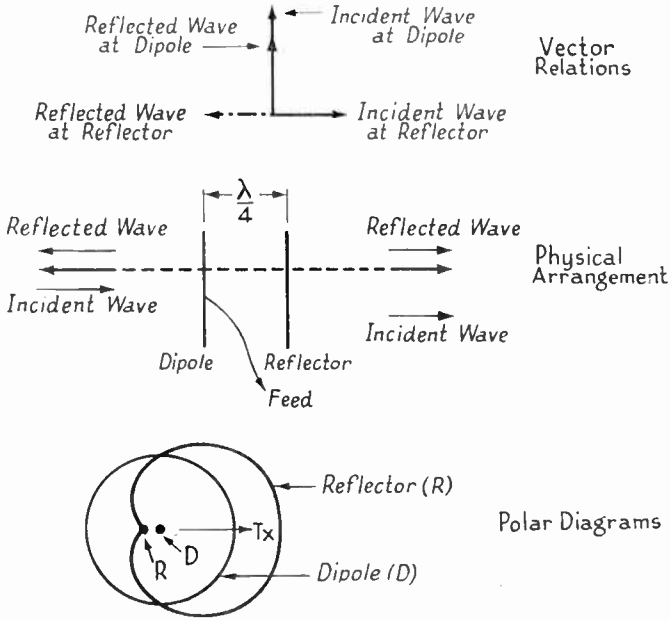

FIG. 9.3A. THE PRINCIPLE OF THE REFLECTOR

arriving directly from the transmitter. Thus, the current induced in the dipole is increased. This reinforcement can only occur in the line joining the two dipoles and in the direction through the main dipole from the reflector. Away from this direction the degree of reinforcement falls; as a result, the polar diagram or radiation pattern (i.e. the locus of the vector tip representing sensitivity in its direction) instead of remaining circular, representing omnidirectional reception, becomes, for $\lambda/4$ spacing, cardioidal (i.e. heart-shaped) as shown in Fig. 9.3A. The shape of this pattern changes appreciably with dipole-to-reflector

spacing; it also varies with frequency. The spacing is not critical for normal reception provided it is within the range $\lambda/8$ to $\lambda/4$; the closer spacing allows a more rigid and compact structure without appreciable loss of performance, and while $0{\cdot}17\lambda$ gives maximum forward gain it is usually best to choose the spacing in regard to backward response.[18]

9.4. The Dipole-receiver Feed.* In view of the short range of the television transmission and of the high prevailing static ("noise") signal occurring at ground level, it is necessary to mount the dipole as high as possible and to feed the energy it absorbs from the wave to the receiver without pick-up of interference. Some form of close-spaced double-conductor line is, of course, necessary for this purpose and of the two basic available types, namely "twin" and "coaxial," the latter type is preferred in this country because it needs no impedance matching transformer and the outer conductor not only takes part in the transmission process but acts as a screen against interference. No steps are taken in commercial aerials to eliminate the resultant unbalanced aerial-to-feeder connection which reduces efficiency and impairs the screening effect of the outer conductor. It is better to use a screened twin feeder together with a folded dipole, as in the U.S.A., although this arrangement is more expensive.

It will be remembered that when electrical power needs to be transferred from one circuit to another, e.g. from the output of a broadcast receiver to its loudspeaker, it is necessary to make the *output* impedance of the circuit supplying the power equal, or "match," the *input* impedance of the circuit receiving the power. If the actual values of these two impedances differ, they may be made effectively equal by the use of a transformer. If matching is ignored, the efficiency of power transfer will not be maximum. Bearing in mind this principle, it will be understood that the matching problem arises at both ends of the television receiving cable. Since matching can be done only between impedances which are substantially resistive, only the dipole centre or ends are suitable connecting points for the

* See Appendix I (§ A 1.10).

feeder. Tapping into intermediate points introduces a reactive component which needs an additional stub for its neutralization. Although centre feed means cutting the dipole at its centre, this method of connection is preferred to end feed because coaxial cable of convenient dimensions has an impedance (practically resistive) in the order of 100 Ω and, by suitable choice of dimensions (for a given dielectric), can be made to match the aerial centre impedance directly, i.e. without the need for a matching transformer. At the receiving end a correct match is obtained by using the inductor of the first tuned circuit as an auto-transformer; alternatively, an *LC* matching section may be used.

Mismatching results not only in loss of signal power but in the setting up of standing-wave conditions in the feeder as a result of which the effective attenuation of the feeder increases owing to increased radiation loss and the degree of pick-up of locally-produced interference increases. Moreover, when an exceptionally long feeder is employed, echo signals may be observed on the raster, owing to the end-to-end reflection over the feeder, which arises because of mismatching at the feeder ends and causes the standing-wave conditions. This trouble will not normally be experienced, however, because the usual feeder run is too short.

The action of the line is worth reviewing. At U.H.F. the leakage resistance across the line and the series resistance of its two conductors are negligible by comparison with the reactances of its series inductance and parallel capacitance. The inductance and capacitance of a line are completely distributed, but it is helpful to regard the line as a chain of *LC* sections each made up of a very small *L* and *C* (see Fig. 9.4A).

If a R.F. generator is applied to one end of a line of infinite length, current will travel down it, and, as a result of the interaction of the associated electric and magnetic fields, the following features arise—

(i) The applied wave travels at a velocity very nearly equal to that of wave propagation in free space.

(ii) The *ratio* of voltage amplitude to current amplitude is

constant over the entire length of the line. This ratio is called the "characteristic" or "surge" impedance of the line.

(iii) At all points current and voltage are in phase so that the characteristic impedance is purely resistive.

(iv) The voltage and current phases change together in a continuous manner down the line, and, since the velocity of transmission is equal to that of normal transmission, points of similar phase occur at half-wave intervals.

(v) There being negligible resistance in the line, energy

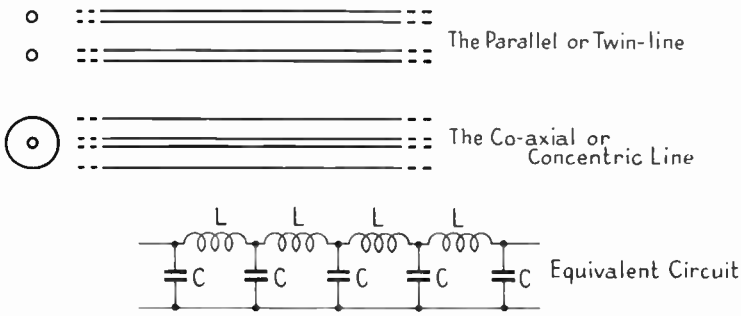

FIG. 9.4A. THE TWO BASIC FORMS OF FEEDER OR TRANSMISSION LINE AND THEIR EQUIVALENT CIRCUIT

entering it is transmitted without loss, except for a small radiation loss which decreases with the conductor spacing.

Now, if the line is of a finite length it will function similarly, provided it is terminated by a resistor equal to its characteristic impedance; all the energy received by this resistor is absorbed. This is the matched condition.

If the load resistance has a value different from the required value, the energy reaching it will not be completely absorbed; for, if R is too large, it will not pass the available current and the difference will dissipate itself by setting up a reflected current wave; or, if R is too small, there will be a surplus voltage which, again, will disappear in a reflected voltage wave.

When these reflected waves occur, they interact with the forward wave in such a manner that the voltage and current amplitudes rise and fall along the line, as they did along the

dipole itself. The chief result is loss of signal strength in the receiver (see Fig. 9.4B).

COMMERCIAL FORMS OF FEEDER. The most common forms of television receiver feeder in current production are—

(i) the coaxial type with solid dielectric,
(ii) the screened twisted pair,
(iii) the unscreened straight twin.

All three types are made with a characteristic impedance of approximately 73 Ω, in order to avoid the necessity of a

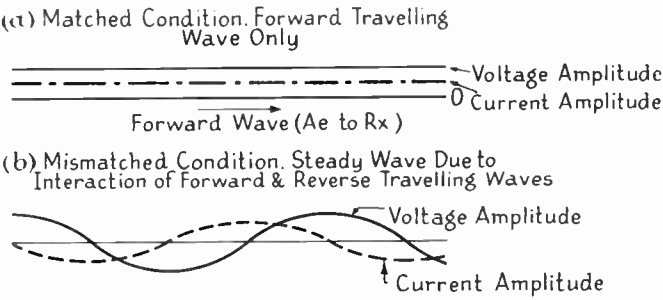

FIG. 9.4B. VOLTAGE AND CURRENT AMPLITUDE DISTRIBUTIONS ON A FEEDER FOR THE MATCHED AND SERIOUSLY MISMATCHED CONDITIONS

matching device, by suitable choice of (*a*) the dielectric material in regard to its permittivity (i.e. its dielectric constant) and (*b*) the spacing and sizes of the conductors. The screened forms should be used except where interference-free reception is consistently enjoyed, when the cheaper unscreened straight twin may be employed. The coaxial is less "lossy," and is cheaper than the screened twisted pair but is asymmetrical with respect to the dipole and less effective against interference. Polythene (or polyethylene) has been chosen by nearly all manufacturers as the dielectric material, while polyvinyl-chloride (p.v.c.), a tough plastic material, is generally preferred for the protective covering. Solid copper wire is used for the inner conductor(s) and copper braid or mesh for the outer conductor (in coaxial cable) or screen. Cross-sectional drawings of an example of each of the two basic types of cable are given

in Fig. 9.4c. The two inner conductors of the screened twin type are usually separately insulated, twisted (to reduce even further the amount of pick-up), and embedded in a solid polythene core of circular cross-section. Three cables made by Belling & Lee, Ltd., are shown in Fig. 9.4d; the principal characteristics of these cables are tabulated below.

DEVELOPMENT OF THE DIPOLE FROM THE TWIN LINE. An understanding of the action of the transmission line provides

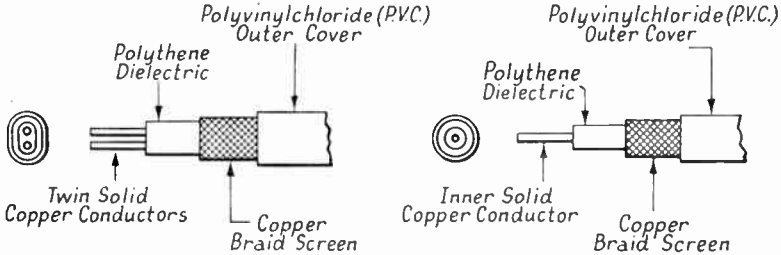

FIG. 9.4c. CONSTRUCTION OF COMMERCIAL FORMS OF SCREENED TWIN AND COAXIAL CABLE

another way of considering that of the half-wave dipole, for the latter may be regarded as being formed from the line by having each side of the last quarter-wavelength turned outwards through 90° (see Fig. 9.4e). This point of view helps to explain the relationship between frequency and resonant length already noted (§ 9.2).

THE VISION-SOUND "SPLITTER." The use of a common dipole for vision and sound reception calls for a division of the

TABLE VII: CHARACTERISTICS OF TYPICAL COMMERCIAL CABLES
(*Courtesy Belling & Lee, Ltd.*)

	Solid Coaxial	Screened Twin	Unscreened Twin
Overall size (inches)	$\frac{1}{4}$	$\frac{1}{4}$	$\frac{3}{16} \times \frac{1}{8}$
Size of conductors (inches)	0·022	0·029	0·036
Characteristic Z	67–77Ω	60–75Ω	75–85Ω
Capacity (per foot)	21 pF	24 pF	18 pF
Attenuation (per 100 ft):			
at 10 Mc/s	1·3 db	3·0 db	1·5 db
at 100 Mc/s	4·3 db	—	5·0 db

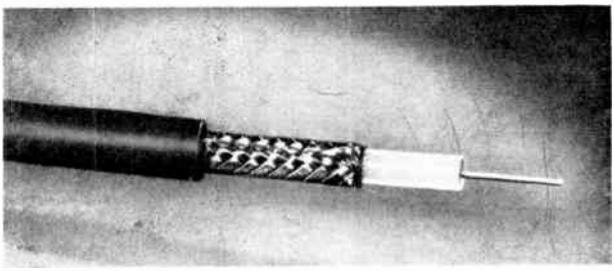

(i) Solid Coaxial.

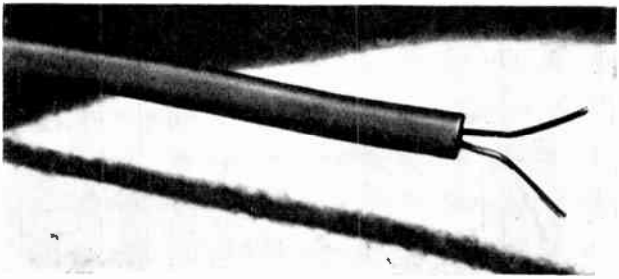

(ii) Solid Unscreened Twin.

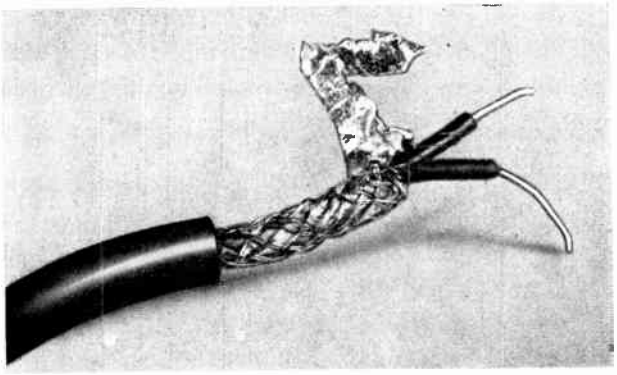

(iii) Screened Twisted Twin.

FIG. 9.4D. COMMERCIAL TELEVISION RECEIVING FEEDER
(Courtesy of Belling & Lee, Ltd.)

common feeder at the point where it enters the receiver if completely separate circuits are employed for reception of the two signals. It follows from transmission-line theory that by careful choice of the lengths of the two branch feeds a certain amount of discrimination against the undesired signal can be achieved in each. The lengths approximate a quarter-wave (which amounts to about 40 in. at 45 Mc/s, for polythene-filled cable) in each branch. The two "sub-feeders" are usually coiled up inside the cabinet.

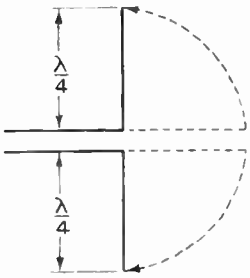

FIG. 9.4E. FORMATION OF DIPOLE BY OPENING OUT THE LAST λ/4 SECTION OF THE FEEDER

9.5. The Complete Aerial System. The complete television receiving aerial normally consists of two λ/2 dipoles (the receiver and the reflector) mounted at opposite ends of a horizontal metal "cross bar" (forming an H), which is supported at its centre by a vertical pole strapped at its lower end to the building housing the receiver. In this country the two dipoles are arranged vertically, while in the U.S.A. they must be mounted horizontally to correspond with the standard direction of wave polarization (i.e. vertically and horizontally respectively). The dipole elements are made of steel, aluminium or copper-alloy tube and surface-treated against corrosion (zinc passivated in the case of steel). The receiving dipole must be insulated at its centre (where it is broken and connected to the feeder) but the reflector may be joined directly to the cross member. The latter is usually tubular so that the feeder may be taken through it. The need to break, insulate, and mount the receiving dipole at its centre leads to mechanical weakness at this point, and this failing has led to the wide adoption in the U.S.A. of the folded dipole whose unbroken member may be clamped at its centre directly to the cross-bar as indicated in Fig. 9.5A.

In the U.S.A. the aerial problem is acute for four reasons—

(i) Up to eight stations may be within receiving range (when all stations are commissioned);

(ii) These stations may be operated on widely-differing frequencies and be located in quite different directions;

(iii) The higher carrier frequencies used accentuate "ghost" reception; and

(iv) The tall buildings act as screens and make it difficult

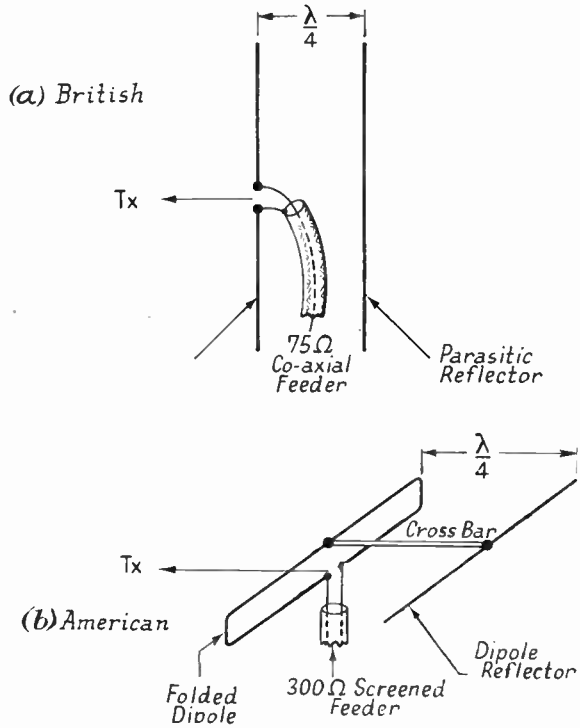

FIG. 9.5A. THE MOST COMMONLY USED AERIALS FOR TELEVISION RECEPTION

to arrange a good aerial location without the use of a long feeder.

When it is desired to operate a normal broadcast receiver together with a television receiver (i.e. at the same location, but not simultaneously) although it is better to employ entirely separate aerials specially designed for each purpose, it is cheaper and more convenient to adapt the television aerial for broadcast reception. The simplest method is to use a covered screened

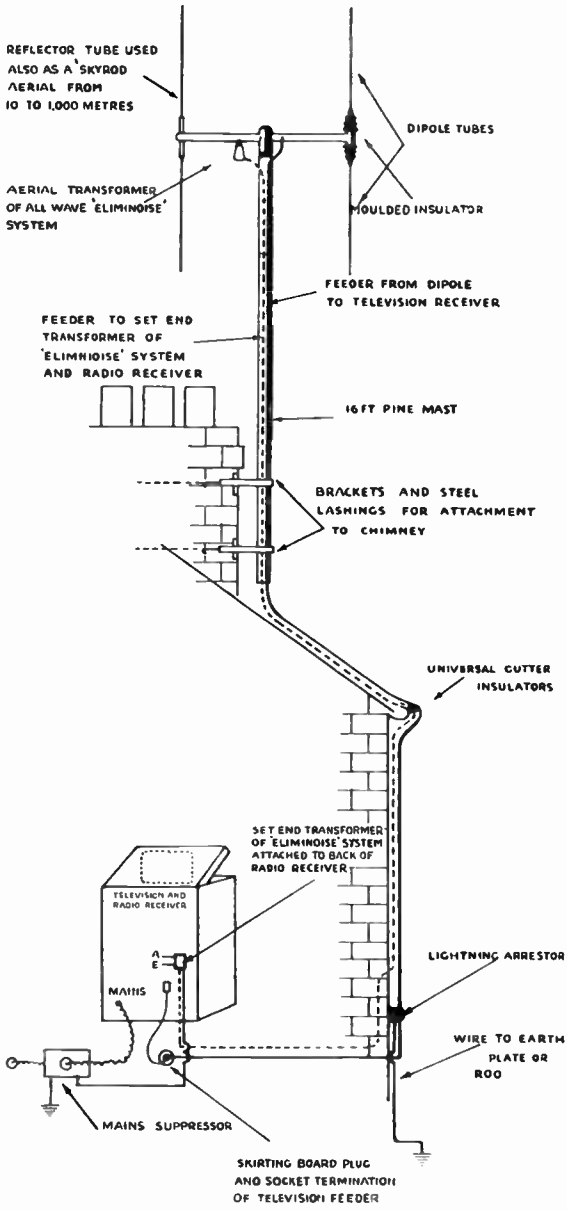

FIG. 9.5B. A TYPICAL COMMERCIAL TELEVISION AND BROADCAST AERIAL SYSTEM

(Courtesy of Belling & Lee, Ltd.)

feeder for the television aerial and provide a changeover switch at the receiver input to allow the outer screen to be earthed for television reception or connected to the aerial terminal of the broadcast receiver. Alternatively the television reflector and the horizontal cross-bar to which it is joined may be used as the broadcast aerial and connected to the receiver through a separate screened feeder: a matching transformer is necessary at each end of the receiver feeder. A typical commercial arrangement of this kind, made by Belling & Lee, Ltd., is shown in Fig. 9.5B.

It is well worth while to employ a complete television and broadcast aerial which has been designed as an integral system and to have it installed by the manufacturer's installation department. The height, position and orientation of the aerial should be systematically varied to achieve optimum signal to interference ratio. The entire system should be dismantled, cleaned and checked at least annually.

9.6. The Tilted-wire Aerial. A form of tilted-wire aerial has been developed for television reception by E.M.I., Ltd.* It is superior to the dipole-reflector combination in regard to its directional properties and so is less susceptible to interference —as is shown by the comparison of horizontal polar diagrams in Figs. 9.6A and 9.3A. A wire extending over several wavelengths is set up at an angle of 45° to the horizontal and in the vertical plane through the direction of the incident wave, as shown in the figure. One end of the wire is effectively earthed through a non-reflecting (i.e. matched) resistive load and the other end is matched into a coaxial line which feeds the receiver. The important feature of the aerial is the insertion of small capacitors at regular intervals in the line; these decrease the equivalent length of the wire, to compensate for its upward tilt, by raising the phase velocity to $\sqrt{2}$ that of the incident wave. But for this feature, which leads to a reasonably compact structure, this aerial would not differ fundamentally from the Beverage aerial which was used in the early days of wireless

* E. C. Cork, J. L. Pawsey, and M. B. Manifold: British Patents Nos. 490414; 493758.

transmission. An e.m.f. is induced at each point of the wire and is propagated both ways along the wire, and since the wire is phase corrected, these elementary e.m.f.'s will combine additively. It is not necessary to use actual capacitors; instead, the wire may be cut into lengths and adjacent ends twisted together. Again, where it is not convenient to use the

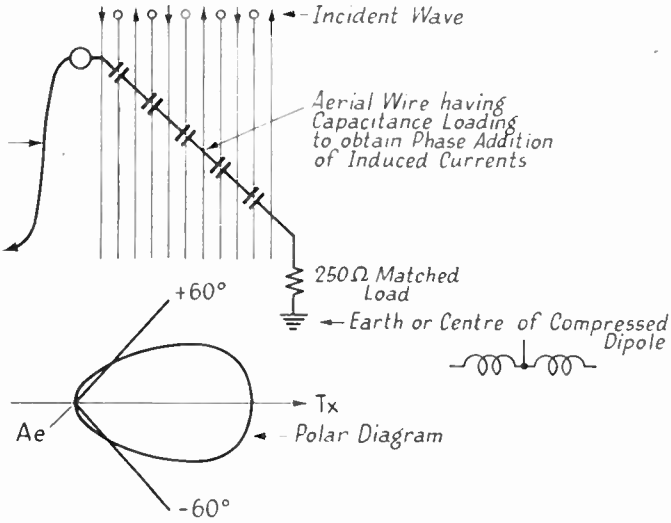

FIG. 9.6A. THE E.M.I. TILTED-WIRE AERIAL AND CORRESPONDING POLAR DIAGRAM

earthed terminating resistor, the line may be connected at its remote end to the centre point of a compressed dipole, i.e. one having coiled arms, which is substantially earthy.

9.7. U.H.F. Propagation. Owing to the short length of the waves used for television transmission, reliable reception is limited to an area of radius not very much greater than the direct line-of-sight between the transmitting and receiving aerials. By comparison with the considerably greater range of longer waves this reduction is due to the inability of the ionized layers of the upper atmosphere to bend back electromagnetic waves shorter than about 8 m, and to the limited extension of range beyond the optical provided by diffraction round the earth's surface. Not only is reliable reception

provided only by the ground wave but the latter suffers from severe attenuation and rapidly falls to an unusable level. Very often, however, strong reception up to distances of several hundred miles has been experienced for short periods. Such "freak" reception has been attributed to refraction at atmospheric discontinuities (e.g. a moving cold front pushing up masses of warm air into the upper atmosphere), to the temporary existence of an ionized layer (called the "sporadic E"), and to reflection of very low angle radiation by the regular E and F layers during extreme conditions of ionization as may occur at the height of the sun-spot cycle. A further factor contributing to short range is the low-power output of existing television transmitters by comparison with those of lower-frequency broadcast stations.

BIBLIOGRAPHY

(1) ——. Aerials. *The Amateur Radio Handbook*. Ch. XII. R.S.G.B.B.

(2) M.I.T. STAFF. Radar Antennas and Propagation. *Principles of Radar*, Ch. IX. McGraw-Hill (1946).

(3) ROBERTS, W. VAN B. Input Impedance of a Folded Dipole. *R.R.* June (1947).

(4) CLARK, H. A. M. Folded Dipoles with Equal and Unequal Elements. *R.S.G.B.B.* Oct. (1947) 62.

(5) GARDINER, E. L. Aerial Reflectors. *W.W.* Oct. (1940) 419.

(6) SCROGGIE, M. G. Transmission Lines. *W.W.* 8th Jan. (1937); 19th Feb. (1937).

(7) M.I.T. STAFF. Radio-frequency Lines. *Principles of Radar*, Ch. VIII. McGraw-Hill (1946).

(8) CORK, E. C., and PAWSEY, J. L. Aerial Feeders for Television. *T.S.S.W.* May (1939) 282.

(9) JOHNSON, E. O. Development of an Ultra Low Loss Transmission Line for Television. *R.R.* June (1946).

(10) STRAFFORD, F. R. W. The Choice of Transmission Lines for Connecting Television Receiving Aerials to Receivers. *T.B.R.C.M.F.*

(11) BELL, D. A. Dipole with Unbalanced Feeder. *W.E.* Jan. (1947) 3.

(12) BENHAM, W. E. Aerial Coupling System for Television. *W.E.* (Oct. 1938) 555.

(13) SEELEY, S. W. Effect of the Receiving Antenna on Television Reception Fidelity. *R.R.* April (1938) 433.

(14) DENT, H. B. Television Aerials. *W.W.* 28th April (1937).

(15) CARTER, P. S. Simple Television Antennas. *R.R.* Oct. (1939) 168.

(16) STRAFFORD, F. R. W. U.S.W. Aerial Systems. *W.W.* April (1940) 224.

(17) CORK, E. C. The Design and Performance of Receiving Aerials for Television. *J.T.S.* Dec. (1946) 301.

(18) BEST, N. M., and BEEBE, R. D. Television Aerials. *W.W.* Aug. (1947) 293.

(19) ——. TV Dipole Antennas. *S.* Aug. (1947) 10.

(20) ——. New Television Aerial. *W.W.* 31st Aug. (1939) 206.

(21) BEVERAGE, H. H. Some Notes on U.H.F. Propagation. *R.R.* Jan. (1937).

(22) BENNINGTON, T. W. Range of Ultra Short Waves. *W.W.* Sept. (1941) 228.

(23) BROWN, G. H. Vertical *v.* Horizontal Polarization. *E.* Oct. (1940).

(24) LAWSON, D. I. Multipath Interference in Television Transmission. *J.I.E.E.* Pt. III, Sept. (1945) 125.

CHAPTER X

RECEIVER TEST EQUIPMENT AND PROCEDURE

THE manufacture, initial testing, and setting up of a television receiver in the factory requires greater skill and care on the part of the operatives and technicians and more elaborate test equipment and procedure than a broadcast receiver. Not only is the amount of circuit detail considerably greater but the additional stages (scanning, synchronizing, etc.) are different in kind. Moreover, the eye is far more critical of performance than the ear, so that tolerances are narrower and adjustments more critical than in a broadcast set.

10.1. Initial Testing and Setting Up. When the chassis (as a whole, or as a group of separate units) has been assembled, wired, and mechanically inspected, it is given some form of systematic manual or semi-automatic resistance check to ensure that connections have been correctly made and short-circuits are absent. Particular care is needed in the wiring of the signal-(radio-)frequency stages where connecting-wire lengths are critical and perfect joints are essential. The various sections of the complete circuit are then tested for performance before being fitted to the receiver cabinet. The more important of these checks, some of which will be described in the following sections, are the sensitivity of both receivers, video receiver response-curve shape, sound rejection ratio in the video receiver, synchronizing-circuit shaping action, time-base amplitude and linearity, and E.H.T. supply voltage. The assembled receiver is tested on an actual transmission, or a locally generated simulation of it, "soak tested" for several hours and finally re-checked on a transmission.

10.2. Alignment of the Signal Circuits. In the alignment of the signal circuits of the average broadcast receiver the tuned circuits are all "peaked" to the carrier frequency or its I.F. equivalent and provided the sensitivity of the entire chain of

amplifier stages is within tolerance no further check of the overall response is made, except possibly one or two special tests on such factors as image-signal rejection. In the television receiver, however, the actual shape of the overall response curve must be examined and adjusted closely to a definite standard to ensure that, so far as the signal circuits are concerned, the complex picture signal will not be seriously distorted. It will be remembered (Chapter VI) that it is the usual practice to "stagger" the tuned circuits over the required frequency band in order to achieve a sufficiently wide response. The only really satisfactory alignment procedure for such circuits involves the use of a frequency-modulated oscillator ("wobbulator"), an accurately calibrated signal generator ("marker") and a cathode-ray oscilloscope ("C.R.O."). At present a large number of commercial oscilloscopes and calibrated signal generators of suitable types are available and it will be assumed that the reader is generally familiar with their basic action and uses (otherwise see Bibliography at the end of this chapter), but very few suitable wobbulators are manufactured. In the factory, of course, the necessary equipment is locally designed and constructed to suit requirements. The frequency-modulated oscillator must provide a constant amplitude output whose frequency sweeps over the required band and be fitted with controls over amplitude, central frequency, and frequency deviation.

It is best to commence the alignment by tuning all circuits to the carrier (or its I.F. equivalent). The calibrated signal generator (with modulation on) is used as the signal source, the C.R.O. is tapped into a convenient signal point in the V.F. output stage to indicate the response, and each stage is aligned in turn, working backwards from the last signal amplifier towards the aerial, as in the alignment of a broadcast receiver. The frequency-modulated oscillator may then be brought into use to obtain a visual picture on the C.R.O. of the overall receiver response curve. A portion of the modulating voltage used to vary the oscillator frequency of the wobbulator is fed to the C.R.O. and used (after amplification, if necessary)

instead of the internal time base, so that as the oscillator frequency varies, the resultant vertical displacement of the C.R.O. beam (which measures the receiver response) is accompanied by a progressive horizontal displacement and, as a result, the C.R.O. spot traces out a curve of amplifier output

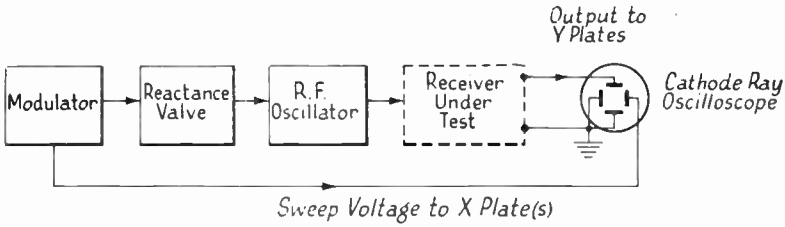

FIG. 10.2A. BASIC SCHEMATIC FOR PLOTTING OVERALL RECEIVER RESPONSE USING THE WOBBULATOR AND THE C.R.O.

versus frequency (see Fig. 10.2A). In the case of the superhet the F.M. oscillator is connected firstly to the input of the first I.F. amplifier. The accurately-calibrated signal generator is then connected to each I.F. stage in turn and the coupling networks successively adjusted to make the response curve fit

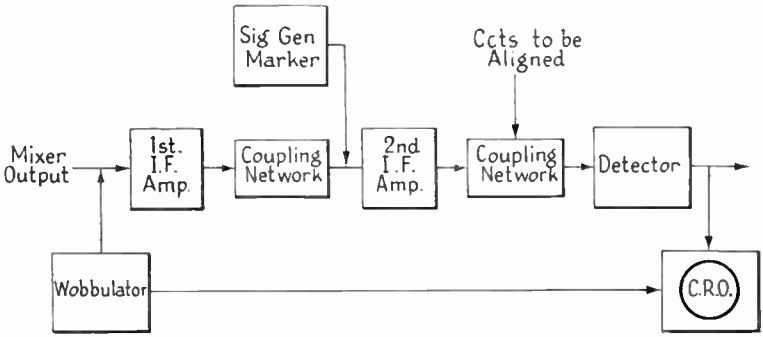

FIG. 10.2B. A STAGE IN THE "VISUAL ALIGNMENT" OF A SUPERHET RECEIVER

the required shape. The purpose of the marker is, of course, to provide a frequency reference. Thus, if the last tuned circuit is required to tune to a frequency 2 Mc/s (say) above the carrier, the marker is set to this point to mark the C.R.O. trace and the tuned circuit is adjusted to produce a maximum response at the point on the curve so marked. As alignment

proceeds, the individual response peaks merge into a relatively even response.

The same procedure is carried out with the signal stages, after appropriate change of the frequency band swept by the wobbulator and transfer of its output to the aerial input circuit (see Fig. 10.2B).

The sound rejector circuits are tuned in the same manner as the individual tuned signal circuits, i.e. using the accurate generator to mark the rejection frequency and the C.R.O. to indicate minimum (rather than maximum) response.

10.3. Checking the Synchronizing and Scanning Circuits. Satisfactory checking of the output amplitude, waveform and synchronism of the scanning circuits is usually carried out by applying to the receiver a test signal representing a still picture, i.e. a signal having exactly the same synchronizing waveform as the standard transmission with a picture component corresponding to a steady scene or pattern. Such a signal is necessary to allow continuous testing in view of the short programme periods at present available and is desirable since a steady picture specially designed to exhibit the circuit characteristics is more effective for test purposes than the average "live" transmission.

Most receiver manufacturers have built their own test signal generator using as a basis the block schematic of the transmitter given in Fig. 1.10A. Two types of picture modulation are necessary: firstly, a resolution pattern, such as the test card radiated by the transmitter before programmes (a B.B.C. example is given in Fig. 10.3A), suitably designed to provide checks on linearity, raster shape, frequency response, etc., and, secondly, modulation corresponding to an actual scene to enable the modulation characteristic of the receiver and cathode-ray tube and the focusing of the latter to be checked.

The resolution pattern may consist simply of a grid of black and white squares forming a checker board, which, with sufficient subdivision (of the order 10 by 8 is adequate) allows the raster shape and time-base linearity to be adjusted together with a finer subdivision produced by high-frequency (up to

3 or more Mc/s) modulation which allows a check to be made on the overall response. The square modulating wave needed in the line direction is usually produced by locking a square-wave generator to a multiple of the frequency of the master oscillator of the synchronizing signal generator, while the

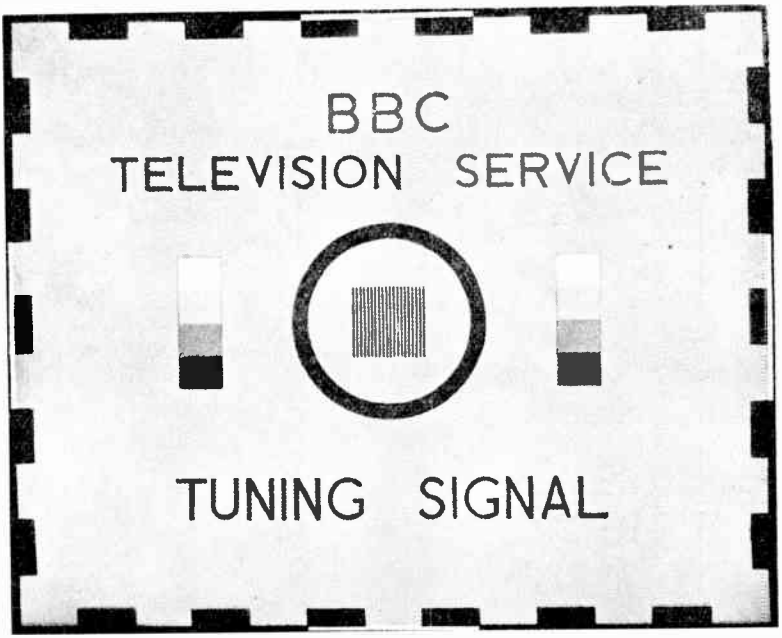

FIG. 10.3A. THE B.B.C. TEST CARD
(*Courtesy of "Electronic Engineering"*)

vertical modulation can be taken from one of the stages in the chain which divides the master-oscillator frequency down to frame frequency. The high-frequency modulation is generated independently, mixed with the lower-frequency components, and the resultant combined with the output of the synchronizing signal to form the complete composite signal. The latter is used to modulate a low-power transmitter operating on a vision carrier frequency and the modulated wave fed to test positions over a coaxial cable.

Servicing in the home or shop during periods of no transmission requires, ideally, a complex generator of the type used

in the factory, but for reasons of cost and portability a simple pattern generator capable of producing only a rough approximation to the standard waveform must be used. A typical example is the Ekco generator shown in Fig. 10.3B.

The other form of modulation required for factory receiver

FIG. 10.3B. THE EKCO PATTERN GENERATOR

This provides a 45 Mc/s signal modulated by line and frame frequency pulses which carry through the picture periods and form a pattern of one horizontal grey bar and two vertical black bars symmetrically arranged on a white background (see Reference 6).

(Courtesy of E. K. Cole, Ltd.)

testing is produced by a still picture generator tube (usually called a "Monoscope" (R.C.A. Trade Mark)). An example is the Cathodeon tube shown in Fig. 10.3C, which can be supplied with a signal plate carrying a simple resolution pattern (Fig. 10.3D) or one of two still pictures.

The picture generator tube is generally similar to a cathode-ray tube and has a conventional electron gun, but the fluorescent screen is replaced by a target plate. The Cathodeon

tube uses normal electromagnetic focusing and deflection inductor assemblies and the target plate coating is treated by a photographic process to make its secondary emission vary from point to point over its surface in correspondence with the desired picture. When the surface is scanned by the electron beam the varying secondary emission induces a similarly varying potential in the target plate carrying the emissive coating and this potential is taken out to a terminal at the end of the envelope. The resolution of the picture is of the order of 1000 lines.

Fig. 10.3c. A Still Picture Generator Tube
(Courtesy of Cathodeon, Ltd.)

The tube and its auxiliaries are shown in schematic form in Fig. 10.3d. The output signal is mixed with the synchronizing signal and used to modulate a carrier-frequency R.F. signal generator.

Returning to the problem of checking the scanning and synchronizing circuits, the equipment just described is used to feed the receiver with the R.F. test signal and the picture (or resolution pattern) reproduced is analysed for defects over a specified range of operating conditions. There are no generally accepted tolerances for such properties as linearity or degree of synchronism and performance is usually assessed by a technician thoroughly experienced in the receiver type under test.

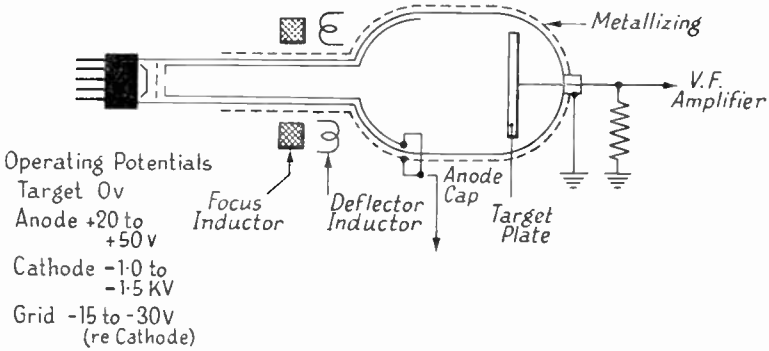

FIG. 10.3D. THE CATHODEON PICTURE GENERATOR TUBE

(Courtesy of Cathodeon, Ltd.)

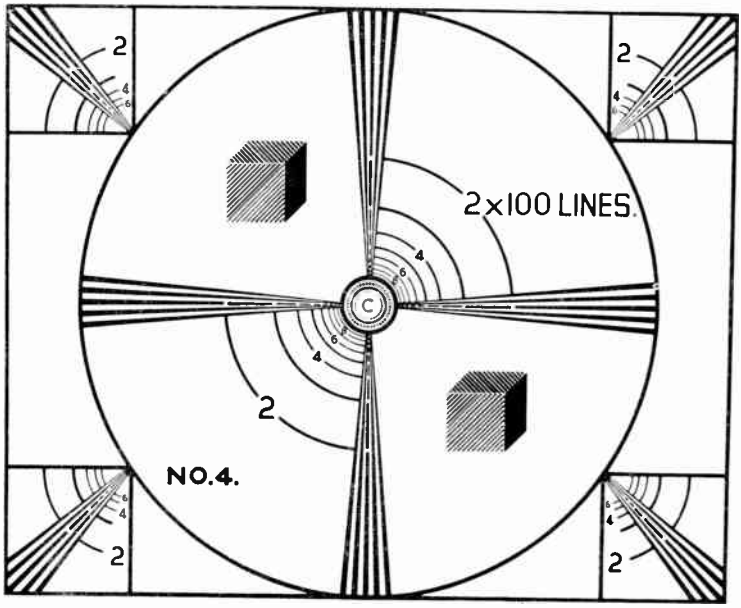

FIG. 10.3E. A TYPICAL RESOLUTION PATTERN

(Courtesy of Cathodeon, Ltd.)

10.4. Analysis of Receiver Defects. While it is probable that a receiver that has been correctly set up and properly installed will continue to function for a long period with no attention apart from occasional resetting of preset controls, its performance will usually be somewhat less reliable than that of a broadcast receiver and faults may arise. Many defects will be relatively simple and easy to correct, but quite complex faults may occur and will prove difficult to locate unless a systematic check, based on the peculiarities of television receivers, is adhered to. While fault-finding (and servicing generally) is beyond the scope of the present book, a review of the problem will throw a useful light on circuit action discussed in previous chapters.

When symptoms of incorrect operation appear, the first step should be a careful analysis of them and of interrelated effects, firstly, with the object of determining definitely whether the fault is within the receiver or due to some external agency such as pick-up of spurious signals or faulty transmission, and secondly (in the case of a defective receiver) which portion of the set is at fault. The experienced viewer will have little difficulty in distinguishing between faulty transmission and reception, and will recognize spurious signals when they appear.

For the second stage of the investigation the picture tube is used in effect as an oscilloscope and, with intelligent interpretation, provides a great deal of useful information when faults occur. When observing the raster the controls should be checked for correct setting and then varied systematically and the effects noted. By this procedure the most elementary faults, due to incorrect setting of controls, will be eliminated, and, in more difficult cases, useful clues may be provided which will help subsequent fault tracing. Thus, where a time base is fed with H.T. current through the focusing inductor it may be found that reduced scan amplitude is accompanied by inability to focus, indicating the probability of low H.T. voltage due perhaps to a high decoupling resistor or a leaky decoupling capacitor.

The principal picture defects may be grouped under the following headings—

(i) Quality of picture, i.e. degree of focus, brightness, depth of modulation.

(ii) Geometry of raster, i.e. size (height, width), linearity, shape ("squareness"), position ("centring").

(iii) Synchronism of picture. Partial or complete failure in one or both directions; "pairing," etc.

(iv) Spurious signals, e.g. ignition interference.

(v) Constancy of picture, e.g. intermittent operation.

In the simpler cases the fault will be definite and permanent (i.e. not intermittent) and will appear as a single defect. For example, the picture may (i) fail to focus, (ii) have insufficient width, or (iii) completely fail to synchronize in one direction. Very often, however, one fault causes secondary effects and care must be taken in deciding on the basic trouble. Thus, if the vision receiver gain drops considerably (owing, perhaps, to a faulty amplifier valve) synchronism will be lost, probably in the horizontal direction only if the reduction in gain is not great, or in both directions if considerable, and may give the impression of increased picture size because an unsynchronized raster usually enlarges to a marked extent when it loses synchronism. These two secondary faults may camouflage more direct results such as reduction of brightness and of contrast. A slightly different example of inter-related effects arises from the inter-dependence of spot brightness, degree of focus and deflection sensitivity, for as the final anode voltage is decreased, brightness falls, fineness of focus changes and the raster increases in size due to the fall in deflection sensitivity. All three symptoms may become quite marked if the E.H.T. voltage drops considerably.

In many cases the relationship between the various symptoms is not so obvious or fundamental as in the case just quoted and two or more apparently quite unrelated effects may occur together. These are usually due to the use of the same H.T. supply or of common signal circuits. A simple example is the cessation of both sound and vision signals due to the failure

of a common R.F. amplifier or mixer. Similarly, failure of a common synchronizing signal separator will cause loss of both line and frame synchronism. Again, where the focusing circuit is used to drop the H.T. voltage from the high value (300 V or more) required for the time bases to the lower (200–250 V) level needed by the signal stages, a fault in the focusing circuit, causing failure to focus, may also result in reduced gain or complete stoppage of the receiver. Finally, where the loud-speaker field is used for smoothing purposes in a common H.T. supply, a fault (e.g. shorted turns) in the field winding could result in considerable 50 c/s ripple in the output of the H.T. supply and speaker hum might be accompanied by dark bands across the picture. This inter-dependence is not necessarily undesirable and from the fault-finding point of view, it can be extremely helpful; thus, to give a simple illustration, if common signal stages are employed and one signal (i.e. sound or vision) disappears, leaving the other substantially unchanged, the common stages can be assumed to be working correctly.

Returning to the problem of analysing the observed picture defects it will be clear now that a correct interpretation, which should be reached before any but the most simple tests are made, may require a knowledge of the circuit diagram. Given the latter and a correct interpretation of the observed symptoms, it should be possible to decide with some certainty where the fault lies and to devise appropriate tests.

For rapid and efficient fault-finding the following apparatus is essential—

(i) an accurately calibrated U.H.F. signal generator,
(ii) a frequency-modulated U.H.F. oscillator,
(iii) video signal ("Pattern") generator for modulating (i),
(iv) a cathode-ray oscilloscope,
(v) electrostatic voltmeter,

together with normal test equipment such as a multi-range test meter. A great deal, of course, can be done without some of these items (e.g. (iv), (v)). Items (i), (ii), (iv) are needed for checking alignment, which should not be attempted without

following the manufacturer's alignment schedule, while (iii), which may be incorporated with (i), is essential for serious work outside live-transmission periods; (iv) is particularly useful for checking the synchronizing and scanning circuits, and (v) almost essential for testing E.H.T. in projection tube supplies.

It will be understood from earlier sections that any detailed fault-finding scheme can apply accurately only to a particular receiver. It may be helpful, however, to review the more common symptoms and their causes.

Complete absence of the spot from the C.R.T. screen may be due to (i) no heater current, (ii) excessive grid bias, (iii) o/c* cathode, (iv) no accelerating voltage, (v) o/c anode. Excessive grid bias is often due to loss of contact between the wiper and track of the BRIGHTNESS control; or it may be due to failure of the video output stage, in circuits where the anode of the latter is directly connected to the cathode of the cathode-ray tube. Failure of the E.H.T. supply is quite common and may be caused by failure of the rectifier valve, smoothing capacitor, or A.C. supply. When an E.S. type voltmeter is not available, an indirect check can be obtained by metering the current taken by the "bleed" circuit across the smoothing capacitor.

Total failure of both time bases which leaves the spot undeflected at the centre of the screen, will almost certainly be due to a failure in the common heater or H.T. supply, because the two circuits are (usually) otherwise completely independent. In the case of failure of only one scanning system the first step (except when a single-stage current oscillator is used) should be to determine whether the output valve or the sawtooth voltage generator is at fault. This can be done very readily if a C.R.O. is available by probing back through the circuit from the deflector inductor connection toward the saw tooth generator grid. Otherwise normal circuit-checking methods will usually yield useful clues. The valves employed in the two sawtooth generators are often of the same kind, thus allowing quick interchange as a first step. The most common faults in time

* = Open circuit.

bases are failure of the valves and of the scanning components (i.e. output transformers and deflection inductors), particularly on the line side.

The most difficult section of the entire set is the synchronizing system, although if a signal is being received at the video input to the system and a suitable C.R.O. is available, a check of the waveforms should lead quickly to the root of the trouble.

Valve failure is the most common cause of loss of signal strength, but the possibility of a fault developing in the aerial and feeder system should always be borne in mind.

BIBLIOGRAPHY

(1) BURNETT, C. E. The Monoscope. *R.R.* April (1938).

(2) TOWNSEND, F. H., GOFF, G. B. F., and BABBS, C. An Improved Television Signal Generator and Its Uses. *J.T.S.* Dec. (1946) 290.

(3) HIBBERD, R. G. A Television Signal Generator. *E.E.* June (1946) 174; July (1946) 204; Aug. (1946) 251.

(4) INSKIP, F. A. A Television Pattern Test Generator. *J.T.S.* June (1946).

(5) KRONENBERG, M. H. Visual Alignment of Television Receivers. *R.N.* Aug. (1947) 64–5.

(6) REYNER, J. H. Cathode-ray Oscillographs. Pitman (3rd Ed., 1947).

CHAPTER XI

COLOUR TELEVISION

THE problem of televising scenes in their natural colours is more complex than transmission of a "black and white" picture (i.e. of a "monochromatic" equivalent of a scene containing a variety of colours). Not only must the brightness of each element be transmitted, together with information identifying the relative positions of the elements, but, in addition, an electrical representation of the colour of each element must be included. The problem of deriving this representation is difficult because any portion of an actual scene, however small, will, in general, be the source not of a relatively pure colour, but of a band of constituent colours which together form the composite colour actually seen.

11.1. Colour and Colour Vision. Physically visible light is electromagnetic radiation occupying the waveband 0·00004 to 0·00008 cm (approx.). The first clue to its nature was provided by Newton when he showed that a narrow beam of sunlight in passing through a glass prism is split up into a continuous band of colours which range from red at one extreme through a variety of hues to violet at the other. The intermediate colours were found to be divisible into a number of relatively distinct bands. The subdivision is not unique, however, and although it is popularly understood that there are seven such bands (the so-called "colours of the rainbow"), scientific workers in this field have decided on different classifications. Thus Abney, one of the early authorities on colour, decided on the following subdivision—

Red . . .	End to 0·620 μ	Blue-green . .	0·513 to 0·500 μ
Orange . .	0·620 to 0·592 μ	Blue . . .	0·500 to 0·464 μ
Yellow . .	0·592 to 0·578 μ	Ultramarine .	0·464 to 0·446 μ
Green . .	0·578 to 0·513 μ	Violet . .	0·466 to End

where μ (the "Micron"), a unit of wavelength adopted for optical work, is equal to 1/1000 mm. It is generally agreed,

however, that there are five very distinct hues, namely red, yellow, green, blue, and violet. By using further prisms, apertures, etc., Newton was able to separate out quite narrow bands of the spectrum formed by the first prism and to recombine them in any desired manner. It was found in due course that when electromagnetic radiation (such as light) passes from one medium (such as air) into a region having different optical properties (such as glass), it is deviated or refracted by an amount which depends, among other things, on the frequency of the radiation. Thus red light is deviated to a greater extent than blue light. The general effect is analogous to the deviation of an electron beam in passing from one region to another having a different potential (Chapter III).

Newton showed that recombination of two distinct spectral colours produced an intermediate hue and demonstrated the possibility of synthesizing white light by showing that a disc printed in angular sections of suitable width with the seven constituent colours appeared substantially white when rapidly rotated.

It can be shown by simple experiments of the kind just described that if more than one colour is presented to the eye, it cannot distinguish between them but recognizes only the resultant colour. Moreover, it cannot readily detect whether the constituent colours co-exist or appear in rapid sequence; in other words, persistence of vision causes successive presentation of the same colour to appear as continuous existence. Before showing how these two properties are used to advantage in colour television, it will be necessary to discuss briefly certain colour relationships and to consider apparent colour of actual objects.

The constituents of white light may be divided into two groups each of which when viewed separately from the other, will appear as a certain colour, depending on the way in which the subdivision is carried out. The two resultant colours are said to be "complementary," because, taken together, in correct proportions they recombine to produce white.

Examples are—

Red (0·66 μ) and bluish-green (0·49 μ),
Yellow (0·59 μ) and blue (0·48 μ)
Greenish-yellow (0·56 μ) and violet (0·43 μ).

The combination of complementary colours is an example of colour synthesis by addition. It is equally possible to obtain certain colours from an existing colour by a subtractive process.

In order to synthesize any colour encountered in nature (as distinct from the spectral hues) it is necessary to use three components. These are not unique, but red, blue and green are usually chosen and have been used in all trichromatic television systems demonstrated to date.

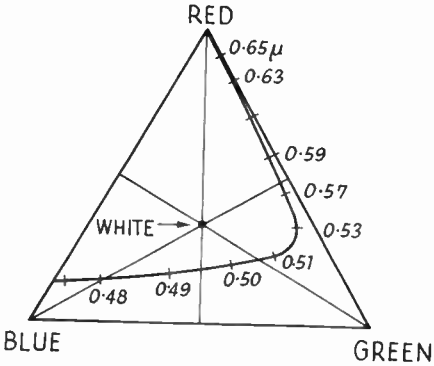

FIG. 11.1A MAXWELL'S COLOUR TRIANGLE

The trichromatic method of colour synthesis has been illustrated graphically by Maxwell in his colour triangle, of which frequent use is made in colour television literature. The pure constituents are represented by the three vertices of an equilateral triangle (see Fig. 11.1A). A combination of any two of the constituents has a representative point on the side joining the two corresponding vertices and the exact position of this point measures the relative brightness of the two components. The actual brightness of any component ranges from zero along the opposite side of the triangle to maximum at the vertex and is measured perpendicularly to the opposite side. In the simplest case the three constituents are so chosen that when they are all present together and with equal brightness they produce white. The point representing white lies at the exact centre of the triangle. It will be noted that each point in the triangle represents a distinct resultant colour;

the locus of the spectral colours is shown by the calibrated curve.

A more convenient form of representation called the "chromaticity diagram" (Fig. 11.1B) has been developed from Maxwell's triangle. It is drawn on the basis of equal total brightness, i.e. of the formation of different colours by varying the intensities of the three constituents while keeping their

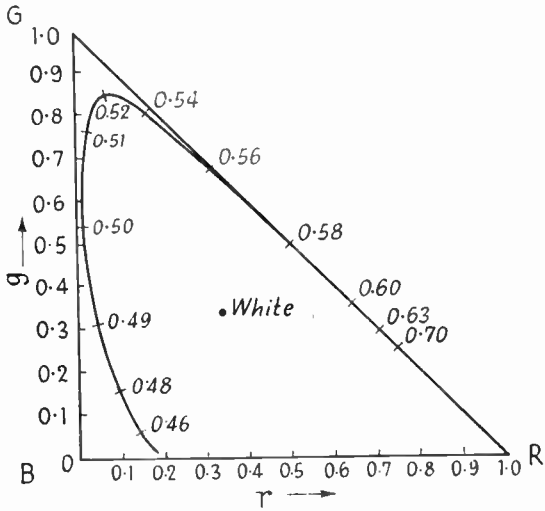

FIG. 11.1B. THE CHROMATICITY DIAGRAM

sum constant. Thus for unit total intensity, we have $r + g + b = 1$, where r, g, b represent the brightness of the red, green, and blue constituents respectively and are called the "tristimulus coefficients." A right-angled triangle is used and arranged so that the sides containing the right angle provide reference co-ordinates as in an ordinary (Cartesian) graph. The intensity of the red component is measured along the X-axis in the positive direction (i.e. rightwards), while the intensity of the green component is measured along the Y-axis, also in the positive direction (i.e. upwards). It is not necessary to use a third axis for representing the blue because its intensity is automatically determined when the intensities of the red and green have been fixed; thus, from the above relationship,

$b = 1 - r - g$. The triangle is completed by joining the point $G = 1{\cdot}0$ on the Y-axis to $R = 1{\cdot}0$ on the X-axis; the intensity of the blue component therefore ranges from zero at any point on this line to maximum at the origin ($R = 0$, $G = 0$). Colours range from blue through the purples to red along the axis $R = 0$ to 1, from blue through the blue-greens to green along the axis $G = 0$ to 1, and from green through yellow and orange to red along the line joining $G = 1$ to $R = 1$. The positions of the spectral colours are shown on the calibrated curved line. White, being the result of equal proportions of red, blue and green, is represented by the centre of the triangle ($r = 0{\cdot}33$, $g = 0{\cdot}33$).

Turning now to the question of the colour of actual bodies, it will be understood that the apparent colour of an object will depend on the composition of the light falling upon it and on its absorption and reflection characteristics. Thus a body which absorbs certain components of white incident light and reflects the remainder, will have the colour complementary to that which is absorbed. To take specific examples, glass which appears red in white light owes its colour to the fact that all other components of the incident light are largely absorbed, while gold leaf appears golden by reflected light but green by transmitted light. These effects are used to advantage in colour television, as will be explained in later sections.

11.2. General Methods of Colour Transmission. With the foregoing introduction to colour and colour vision it will be possible for the reader to understand the methods of colour television so far demonstrated and to follow subsequent developments in the literature. Up to the present, no standards of transmission have been decided upon and technique has not crystallized to an extent allowing treatment in terms of general principles. On the other hand, existing experimental transmissions may be classified into two types called "simultaneous" and "sequential" respectively. An important consideration is the desirability of developing colour television as an extension of black and white picture transmission so that existing receivers may be switched to receive either type of signal.

It will be understood that equipment used for black and white transmission may be adapted to transmission of any particular colour merely by using a camera mosaic material which is sensitive to the desired colour and a picture tube fluorescent screen having a similar spectral characteristic. On the basis that any natural colour may be accurately reproduced by a combination of three "primary" components, two distinct methods of transmission are feasible. In the more obvious method the red, green, and blue components of the light from the scene are transmitted separately over three entirely separate channels and the three coloured images finally produced are superimposed at the receiving end. This technique is called simultaneous transmission in contradistinction to the sequential method, in which the three component pictures are transmitted in turn, over a single channel. The two methods differ much less than would appear from this brief statement. The paramount consideration is the frequency bandwidth occupied by the transmission as a whole, and this is of the same order in the two cases since the bandwidth required depends on the amount of detail to be transmitted rather than on the means used for transmitting it. A more detailed comparison must be deferred until the two methods have been described in greater detail.

11.3. The Sequential Method. The majority of practical systems so far demonstrated have used the sequential method because it leads to a simpler and less expensive receiver than simultaneous transmission. At the transmitter the camera views the scene through a rotating disc which carries three sets of colour filters, one for each primary colour. At the receiver the image produced on the picture tube is viewed through a similar filter disc which is kept in synchronism with its counterpart in the transmitter by a special synchronizing signal. It will be noted that ordinary cameras and picture tubes (as employed for black and white transmission) could be adapted to this method.

This system has been developed to an advanced form by the Columbia Broadcasting System. The C.B.S. equipment

demonstrated in 1940 was designed to occupy the same bandwidth as the standard (525 line) transmission by reducing the line frequency from $262\frac{1}{2}$ to $187\frac{1}{2}$ per frame (field) to compensate for the higher frame frequency (120 per second) needed to remove colour flicker. Successive frames were scanned in the sequence, red, blue, green, red, and so on; moreover, alternate frames were interlaced in the usual manner, so that the com-

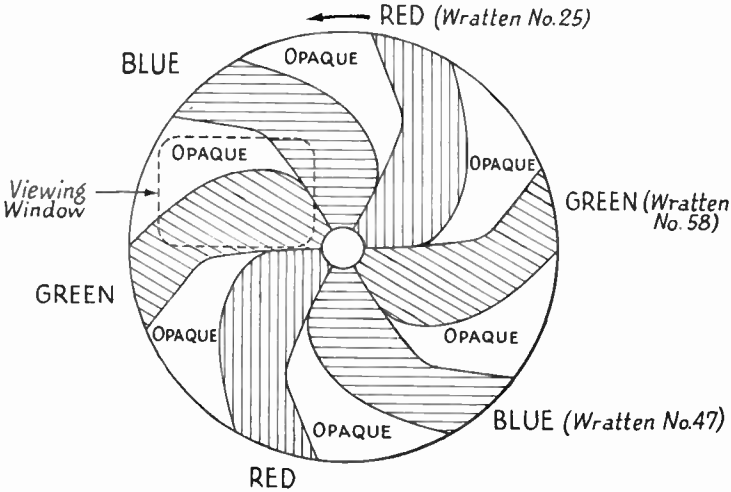

FIG. 11.3A. THE C.B.S. COLOUR DISC
(*Courtesy of the I.R.E.*)

plete picture cycle required six frames and occupied $\frac{6}{120} = \frac{1}{20}$ sec. The colour discs used carried two sets of filters and were rotated at 1200 r.p.m. The type of disc employed is shown in Fig. 11.3A. The speed was maintained at the correct value by comparing the output voltage of a small generator driven from the same shaft as the colour disc with a 120 c/s wave derived from the time base in a frequency-discriminator circuit whose output voltage (representing the speed error) was used to operate a magnetic brake in such a manner that the latter tended to "zero" the error. Correct phasing of the disc was achieved by inserting a train of 90 kc/s pulses after the equalizing pulses terminating the red framing signal and using it at the receiver to lock the magnetic brake if the colour disc

fell out of phase, thus allowing it to change speed in such a direction as to move back into the correct phase relationship.

More recently (1946) C.B.S. have demonstrated a similar system having a 10 Mc/s bandwidth instead of the 6 Mc/s band occupied by the earlier equipment. The frame rate and scanning sequence were the same as before but the number of lines

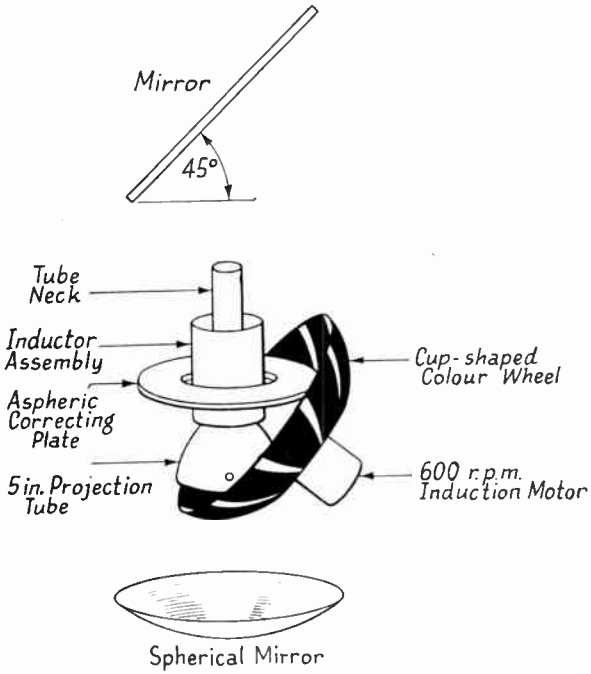

FIG. 11.3B. THE C.B.S. COLOUR PROJECTION SYSTEM

per frame had been increased to 262½. The wide bandwidth lead to the choice of 485 Mc/s for the vision carrier. A significant innovation was the method of sound transmission; pulses of frequency modulated R.F. signal having a central frequency equal to that of the carrier were inserted into the line synchronizing periods. Two receivers were demonstrated, one having a directly-viewed tube and the other a projection tube. The latter was used with a cup form of colour disc of the form shown in Fig. 11.3B.

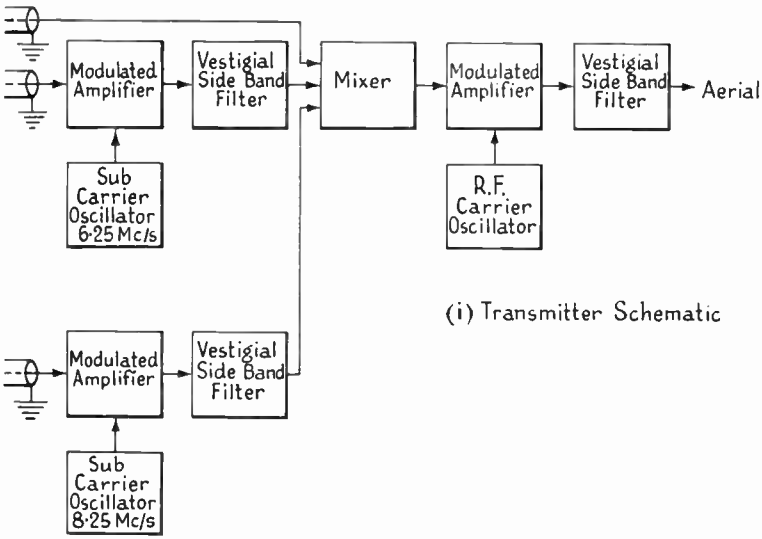

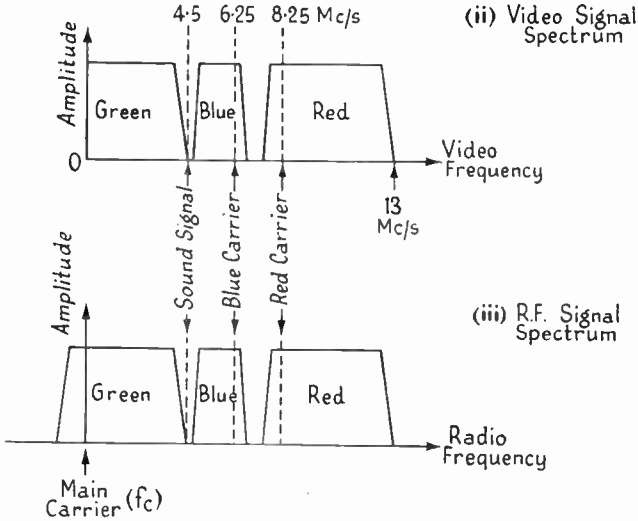

FIG. 11.4A. THE R.C.A. SIMULTANEOUS COLOUR TRANSMITTER
(Courtesy of the I.R.E.)

11.4. The Simultaneous Method. A demonstration of the simultaneous method of transmission has been given recently by the Radio Corporation of America. In this method there

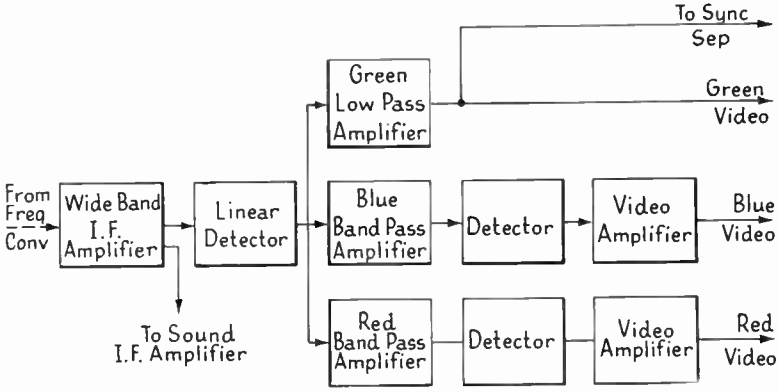

FIG. 11.4B. SCHEMATIC OF RECEIVER FOR SIGNAL OF SUB-CARRIER TYPE
(Courtesy of the I.R.E.)

is a choice between the use of three independent carriers occupying adjacent channels or of a main carrier modulated by three sub-carriers each of which is modulated by one of the three video signals (red, green, blue) to be transmitted. The

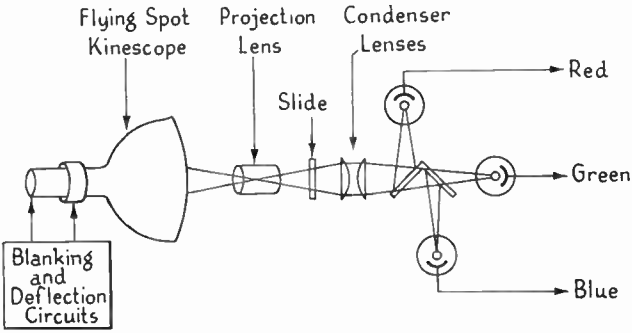

FIG. 11.4C. THE COLOUR-SLIDE SCANNER
(Courtesy of the I.R.E.)

latter was chosen for convenience in the R.C.A. equipment, and the arrangement of signal spectra and transmitter and receiver units used are shown in Figs. 11.4A and 11.4B. The scanning unit employed for film transmission is shown in Fig. 11.4C.

The moving colour film or stationary slide is scanned by light from a small cathode-ray tube and the coloured light emerging from the transparency is focused through a dichroic beam-splitter on to three photocells, one supplying each video channel. The two mirrors in the beam splitter are coated with material which reflects one of the three coloured components efficiently and allows the remaining component(s) to pass. Recombination of the three video signals at the receiver is achieved by using three projection tubes ("Trinoscope")

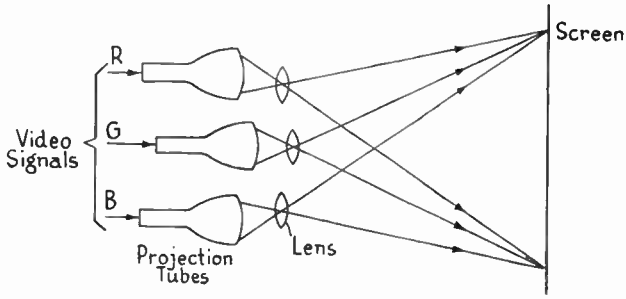

FIG. 11.4D. ARRANGEMENT OF THE PROJECTION SYSTEM IN THE RECEIVER

together with a lens system which superimposes the three coloured images (see Fig. 11.4D). An important feature of the entire system is the use of a restricted bandwidth (1·3 Mc/s) in the blue channel by comparison with that in the green and red (4·5 Mc/s each) in order to economize in total bandwidth. The green channel above is claimed to provide a satisfactory picture on a normal single channel (black and white) receiver, in which respect the system offers an advantage over the sequential method.

In view of the complexity of the receiver and triple-tube assembly of the present R.C.A. system, it is worth while considering possible simplification. The final work of the late J. L. Baird, who was the first to achieve practical colour television in 1928, was along these lines. His use of a two-colour (red and blue-green) system is comparable to the restriction of the blue signal in the R.C.A. system. Moreover, this step

allowed the use of the ingenious idea of producing the red and blue-green images side by side on a single tube. His method of combining the two images was similar to that adopted in the Trinoscope, and is shown in Fig. 11.4E. Baird

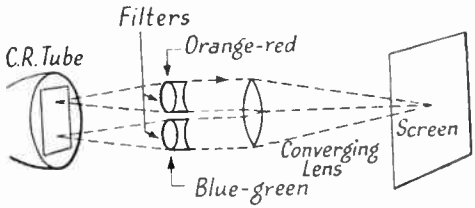

FIG. 11.4E. BAIRD'S FINAL COLOUR RECEIVER PROJECTION SYSTEM

also developed a multiple-beam picture tube (the "Telechrome") in which the separate coloured images could be directly superimposed. In the two-colour tube the fluorescent screens were deposited on opposite sides of a thin transparent

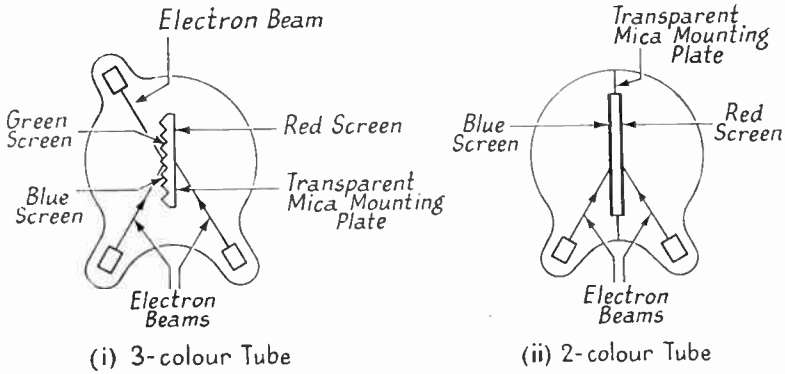

FIG. 11.4F. BAIRD'S TELECHROME TUBES

mica sheet, each side of which was scanned obliquely by separate beams arranged one on either side of the double screen. The mica mounting plate in the three-colour tube is corrugated to allow two distinct screens to be carried and a third gun is added, as shown in the diagram, Fig. 11.4F. The composite screen can be viewed from one side only because from the other side the image will appear reversed.

11.5. Comparison of the Two Methods. In fidelity of colour reproduction and overall bandwidth required there is little difference between the two methods of transmission. Apart from the complexity of the receiver needed for simultaneous reception of three separate images and the greater difficulty of adapting the sequential method to natural colour or black and white reproduction at will, the significant differences between the two techniques arise from the fact that in the simultaneous system the three images co-exist, whereas in the other method, the images are presented separately in rapid sequence. As a result the one suffers from the difficulty of achieving accurate colour registration while the other may exhibit colour flicker, colour fringing, and colour break-up (when the eyes of the viewer are rapidly shifted). The possibility of achieving three times the brightness in the simultaneous method, other factors being equal, is outweighed at present by the need to use projection tubes.

At present it is considered more useful and realistic, both here and in the U.S.A., to extend the use and improve the quality of black and white transmission. In the meantime, colour television development, although on a limited scale, may lead to improved methods of picture presentation at the receiver which will resolve the choice between the simultaneous and sequential methods before it becomes desirable to formulate colour transmission standards.

BIBLIOGRAPHY

(1) J. L. Baird's Final Work. See *E.E.* Aug. (1942) 95; Jan. (1943) 327; Sept. (1944) 141.

(2) GOLDMARK, P., *et al.* Color Television. *P.I.R.E.* April (1942) 162; Sept. (1943) 465.

(3) JESTY, L. C. Scanning Systems for Colour Television. *E.E.* April (1945) 456; and Colour Television (Discussion) *J.I.E.E.* Pt. III, Dec. (1945) 258.

(4) Color Television on Ultra High Frequencies. *E.* April (1946) 109.

(5) FINK, D. B. Two Systems of Color Television. *E.* Jan. (1947) 72.

(6) KELL, R. D., *et al.* An Experimental Simultaneous Color-television System. *P.I.R.E.* Sept. (1947) 861.

(7) CHERRY, W. H. Colorimetry in Television. *R.R.* Sept. (1947) 427.

APPENDIX I

MATHEMATICAL NOTES

A1.1. Fourier Series Representation of Some Common Waveforms. In each case θ will be written for $2\pi ft$,

where
- $\pi = 3{\cdot}142$,
- f denotes the fundamental frequency in cycles per second and is constant,
- t denotes time in seconds and is continuously increasing,

and a, A for instantaneous and peak-to-peak amplitudes respectively.

In cases (1) and (2) the wave is symmetrical about $a = 0$, i.e. the direct component is zero.

(1) THE SYMMETRICAL SQUARE WAVE

Positive- and negative-going portions of equal duration.

(*a*) $t = 0$ at centre of positive-going half-cycle.

$$a = \frac{2}{\pi}\mathrm{A}(\cos\theta - \tfrac{1}{3}\cos 3\theta + \tfrac{1}{5}\cos 5\theta - \ldots)$$

(*b*) $t = 0$ at leading edge of positive-going half-cycle.

$$a = \frac{2}{\pi}\mathrm{A}(\sin\theta + \tfrac{1}{3}\sin 3\theta + \tfrac{1}{5}\sin 5\theta + \ldots)$$

(2) THE TRIANGULAR WAVE

(*a*) Positive- and negative-going portions of equal duration, $t = 0$ at beginning of negative slope, i.e. at positive vertex.

$$a = \tfrac{1}{2}\left(\frac{2}{\pi}\mathrm{A}\right)^2(\cos\theta + (\tfrac{1}{3})^2\cos 3\theta + (\tfrac{1}{5})^2\cos 5\theta + \ldots)$$

(*b*) Negative-going portion of zero duration.
$t = 0$ at centre of positive slope.

$$a = \tfrac{1}{2}\left(\frac{2}{\pi}\mathrm{A}\right)(\sin\theta - \tfrac{1}{2}\sin 2\theta + \tfrac{1}{3}\sin 3\theta - \ldots)$$

(3) THE SQUARE PULSE WAVE

All pulses entirely positive; $a = 0$ between pulses. $t = 0$ at centre of pulse.

$$a = sA + \frac{2}{\pi} A \sum_{n=1}^{\infty} \frac{1}{n} \sin ns\pi \cos n\theta$$

where $s = \frac{\phi}{2\pi}$, ϕ being the angular pulse width,

or $= \frac{\tau}{T}$, τ being the pulse duration and T the wave period.

and sA is the direct component.

For plots and tables of relative amplitudes of harmonics, see *Radio Engineers' Handbook*, p. 22, F. E. Terman, McGraw Hill (1943); D. L. Kerr, *Electronics for Engineers*, p. 220 (edited by J. Markus and V. Zeluff), McGraw Hill (1945).

A1.2. Transient Response of Simple Networks. In all the cases considered the applied force is assumed to be of step form. The step will have amplitude E volts or I amperes from $t = 0$ onwards. Expressions given for component currents and p.d.'s are all zero for $t < 0$. (ε (the "exponential") $= 2{\cdot}718$).

(1) C AND R IN SERIES. VOLTAGE EXCITATION (FIG. 2.3B)

$$i = \frac{E}{R}\varepsilon^{-t/CR}$$

$$\left.\begin{aligned} e_R &= iR = E\varepsilon^{-t/CR} &&= 0{\cdot}368E \\ e_C &= E - iR = E(1 - \varepsilon^{-t/CR}) &&= 0{\cdot}632E \end{aligned}\right\} \text{when } t = CR$$

(2) L AND R IN SERIES. VOLTAGE EXCITATION (FIG. 2.3B)

$$i = \frac{E}{R}(1 - \varepsilon^{-R/L\,t})$$

$$\left.\begin{aligned} e_R &= iR = E(1 - \varepsilon^{-R/L\,t}) &&= 0{\cdot}632E \\ e_C &= E - iR = E\varepsilon^{-R/L\,t} &&= 0{\cdot}368E \end{aligned}\right\} \text{when } t = L/R$$

(3) C AND R IN PARALLEL. CURRENT EXCITATION (FIG. 2.3C)

$$\left.\begin{aligned} i_R &= I(1 - \varepsilon^{-t/CR}) &&= 0{\cdot}632I \\ e_R &= i_R R = IR(1 - \varepsilon^{-t/CR}) &&= 0{\cdot}632IR \\ i_C &= I - i_R = I\varepsilon^{-t/CR} &&= 0{\cdot}368I \end{aligned}\right\} \text{when } t = CR$$

$$e_C = e_R$$

(4) L AND R IN PARALLEL. CURRENT EXCITATION (FIG. 2.3C)

$$\left.\begin{aligned} i_L &= I(1-\varepsilon^{-R/L\,t}) &&= 0{\cdot}632I \\ i_R &= I - i_L = I\varepsilon^{-R/L\,t} &&= 0{\cdot}368I \\ e_R &= i_R R = IR\varepsilon^{-R/L\,t} &&= 0{\cdot}368IR \end{aligned}\right\} \text{ when } t = L/R$$

$$e_L = e_R$$

For tabulation of exponentials see Terman, loc. cit., p. 15.

A1.3. Gain and Impedances of Basic Valve Circuits. The following results assume linear operation of the valve and no grid current flow. All H.F. effects are ignored and loads are assumed to be perfectly resistive.

The valve characteristics are specified by—

μ (amplification factor)

and r (anode a.c. resistance).

(1) NORMAL AMPLIFIER (Grid input—anode output)

Gain: $\mu R_1/(r + R_1)$

Output Impedance: $rR_1/(r + R_1)$

where R_1 is the anode load.

(2) CATHODE FOLLOWER (Grid input—cathode output)

Gain: $\mu R_2/\{r + (\mu + 1)R_2\} \approx \mu/(\mu + 1)$

Output Impedance: $rR_2/\{r + (\mu + 1)R_2\}$

where R_2 is the cathode load.

(3) GROUNDED-GRID AMPLIFIER (Cathode input—anode output)

Gain: $(\mu + 1)R_1/\{r + R_1 + (\mu + 1)R_2\}$

Input Impedance:

$$\frac{R_2\{(r + R_1)/(\mu + 1)\}}{R_2 + \{(r + R_1)/(\mu + 1)\}}$$

Output Impedance:

$$R_1\{r + R_2(\mu + 1)\}/\{r + R_1 + R_2(\mu + 1)\}$$

where R_1 is the anode load and R_2 the cathode load.

A1.4. Electromagnetic Deflection.

(1) An electron set in motion with speed v (centimetres per second) in a magnetic field of strength H (oersted) and in a

direction initially perpendicular to the flux of the latter, moves in a circle of radius

$$r = \frac{mv}{eH} \text{ centimetres}$$

where e, m are the charge (in coulombs) and mass (in grammes) of the electron.

(2) For the case of electromagnetic deflection of the beam of a cathode-ray tube

$$d = \frac{\mathrm{D}leH}{mv} \text{ (approximately)}$$

where d = displacement of spot on screen,
D = distance from inductor centre to screen,
l = length of deflection inductor,
e, m, H, v are as before,

and v is proportional to the square-root of the final anode voltage.

A1.5. The Integration Method of Time-base Linearization. The difference between the exponential voltage change

$$e = E(1 - \varepsilon^{-t/T})$$

and the continuation of its initial slope

$$e' = E\frac{t}{T}$$

is proportional to the change itself, for

$$E\left(\frac{t}{T} - 1 + \varepsilon^{-t/T}\right) = \frac{1}{T}\int E(1 - \varepsilon^{-t/T})\,dt$$

which may be checked by expanding the exponentials into infinite series and performing the integration term by term. Hence integration of the voltage change provides a suitable linearity correction voltage.

A1.6. Magnitudes and Phase Angles of Coupling Impedances.

(1) Resistive Load (R) with Parallel Stray Capacitance (C)

Magnitude: $R/\sqrt{(1 + \omega^2C^2R^2)}$

Phase angle: $\tan^{-1}(\omega CR)$

(2) As (1), with H.F. Compensating Inductor (L) in Series with R

Magnitude:

$$\sqrt{[(R^2 + \omega^2L^2)/\{(1 - \omega^2LC)^2 + (\omega CR)^2\}]}$$

Phase angle: $\tan^{-1} \frac{\omega}{R} \{(1 - \omega^2LC)L - CR^2\}$

(3) As (1) with Inductor (L) in Parallel with R and C

Magnitude: $\sqrt{\left[1 \Big/ \left\{\left(\frac{1}{R}\right)^2 + \left(\omega C - \frac{1}{\omega L}\right)^2\right\}\right]}$

Phase angle: $\tan^{-1} \left\{R\left(\frac{1}{\omega L} - \omega C\right)\right\}$

A1.7. Wideband Amplification. The gain of a high-impedance valve operating into a two-terminal parallel-resonant network (see § A1.6, (3)), whose maximum impedance is R at resonance, is given by gR, where g is the mutual conductance. It can be shown that the bandwidth of such a stage (between -3 db points, as is usual) is $\Delta f = 1/2\pi RC$. The gain-bandwidth product criterion of the performance of the stage is, therefore,

$$B = \Delta f \,.\, gR = gR/2\pi RC = g/2\pi C$$

A1.8. Frequency Components of Modulated Waves.

(1) Amplitude Modulation

An amplitude-modulated wave may be represented by—

$$a_{MC} = A_C(1 + k_A \sin 2\pi f_M t) \sin 2\pi f_C t$$

where a_{MC} = instantaneous amplitude of the carrier,
A_C = maximum amplitude of the unmodulated carrier,
k_A = maximum fractional amplitude change of the carrier due to modulation,
π = 3·142,
f_M = modulation frequency,
f_C = carrier frequency,
t = time,
$_C$ (subscript) denotes the carrier,
and $_M$ (subscript) denotes the modulation.

This expression can be resolved into three components—

(i) the carrier: $A_C \sin 2\pi f_C t$,

(ii) the upper sideband: $-\frac{1}{2}k_A A_C \cos 2\pi(f_C + f_M)t$,

(iii) the lower sideband: $+\frac{1}{2}k_A A_C \cos 2\pi(f_C - f_M)t$.

(2) Frequency Modulation

A frequency-modulated wave may be represented by—

$$a_{MC} = A_C \sin (2\pi f_C t + k_F \sin 2\pi f_M t)$$

where k_F, the "modulation index," is the ratio of maximum carrier frequency change to the modulation frequency, i.e. $k_F = \dfrac{\Delta f_C}{f_M}$ and the other symbols have the same significance as before.

This expression can be resolved into—

(i) the carrier $J_0(k_F) \,.\, A_C \sin 2\pi f_C t$ and

(ii) an infinite number of pairs of sidebands, thus—

$$+ J_1(k_F)A_C\{\sin (2\pi f_C t + 2\pi f_M t) - \sin (2\pi f_C t - 2\pi f_M t)\}$$
$$+ J_2(k_F)A_C\{\sin (2\pi f_C t + 4\pi f_M t) + \sin (2\pi f_C t - 4\pi f_M t)\}$$
$$+ J_3(k_F)A_C\{\sin (2\pi f_C t + 6\pi f_M t) - \sin (2\pi f_C t - 6\pi f_M t)\}$$

. . . and so on.

The Bessel coefficients $J_n(k_F)$ have been tabulated in *Reference Data for Radio Engineers*, p. 172, W. L. McPherson, Standard Telephones & Cables, Ltd.

(3) Pulse-width Modulation

When ϕ (or τ) in the expression for the square-pulse wave given in A1.1, (3), is very small compared with 2π (or T), so that $s \ll 1$, the expression reduces to—

$$a = 2sA(\tfrac{1}{2} + \sum_{n=1}^{\infty} \cos n\theta)$$

For sinusoidal modulation of the pulse width at frequency f_M the pulse width varies in the manner—

$$\tau = \tau_0(1 + k_W \cos 2\pi f_M t),$$

where k_W is the maximum fractional change of pulse width.

Substitution of this result in the first expression gives—

$$a = 2A\frac{\tau_0}{T}(1 + k_W \cos 2\pi f_M t)(\tfrac{1}{2} + \cos\theta + \cos 2\theta + \ldots)$$

which contains the constant component $A\frac{\tau_0}{T}$, the original modulation

$$A\frac{\tau_0}{T}(1 + k_W \cos 2\pi f_M t)$$

and all the components of the original pulse wave, each carrying the modulation. To allow the latter components to be removed by a low-pass filter, thus leaving only the constant and modulation components, the pulse recurrence frequency must exceed twice the highest modulation frequency required.

A1.9. Polar Diagrams.

(1) Of a half-wave dipole in free space (i.e. unaffected by the earth's surface). The "form factor" for the plane containing the dipole is

$$F = \cos\left(\frac{\pi}{2}\cos\theta\right)\Big/\sin\theta$$

where θ is measured from the axis of the dipole.

(2) Of a half-wave dipole and half-wave reflector both in free space and separated by a quarter wavelength. The currents in the two elements are assumed to be equal in amplitude but $\frac{\pi}{2}$ different in phase. In this case

$$F' = F \times \cos\left\{\frac{\pi}{4}(\sin\theta\cos\phi - 1)\right\}$$

where F is as given in (1) above, θ is measured as before, and ϕ is measured in the perpendicular plane, as shown in Fig. A2.9.

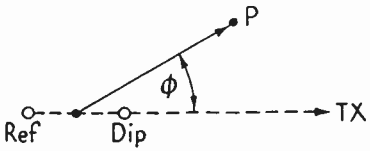

FIG. A1.9

A1.10. Characteristic Impedances of Transmission Lines. The characteristic impedance of a transmission line at very high frequencies (where the series resistance of the conductors is negligible compared with their inductive reactance, and the

parallel capacitance is very small compared with leakage resistance) is given by

$$z_0 = \sqrt{\frac{L}{C}} \text{ ohms}$$

where L and C are the inductance and capacitance per unit length respectively.

For twin similar conductors in air

$$z_0 = 276 \log_{10} \frac{S}{r} \text{ ohms,}$$

where S is the spacing between the centres of the conductor and r is their radius.

For a coaxial line with an air dielectric

$$z_0 = \tfrac{1}{2} \cdot 276 \log_{10} \frac{r_2}{r_1} \text{ ohms,}$$

where r_2 is the inner radius of the outer conductor and r_1 is the outer radius of the inner conductor.

For dielectrics whose constant ("permittivity") is not unity the last two expressions must be divided by the square root of the constant. The permittivity of polythene is about 3. The "electrical" length of the feeder is reduced in the same proportion, namely to 0·64 of the physical length in the case of polythene.

APPENDIX II

BIBLIOGRAPHICAL NOTES

1. THE following books will be found useful for further study—

FINK, D. G. *Principles of Television Engineering.* McGraw-Hill (1940).

FINK, D. G. *Television Standards and Practice.* McGraw-Hill (1943).

ZWORYKIN, V. K., and MORTON, G. A. *Television: The Optics of Image Transmission.* Wiley (1940).

COCKING, W. T. *Television Receiving Equipment.* Iliffe (1947, 2nd Ed.).

PUCKLE, O. S. *Time Bases.* Chapman & Hall (1943).

——. *Television*, Vols. I–IV (Collected Papers). Radio Corporation of America.

An excellent account of the principles and early development (to 1936) is given in—

WILSON, J. C. *Television Engineering.* Pitman (1936).

2. The following periodicals cover the television field—

Great Britain: *Electronic Engineering, Journal of the Television Society, Wireless World.*

U.S.A.: *Electronics, R.C.A. Review, Proceedings of the I.R.E., Tele-Tech, Communications.*

France: *La Television Française.*

For a monthly list of abstracted articles see *Wireless Engineer* and *Proc.I.R.E.*

3. The following is a list of journal title abbreviations used in the Bibliography at the end of each chapter—

**A.W.A.T.R.*	*A.W.A. Technical Review* (Amalgamated Wireless (Australasia), Ltd.).
†*B.B.C.Q.J.*	*B.B.C. Quarterly Journal* (British Broadcasting Corporation).
C. . .	*Communications.*
E. . .	*Electronics.*
†*E.E.* . .	*Electronic Engineering.*
E.Eng. .	*Electrical Engineering.*
E.I. . .	*Electronic Industries.*
†*End.* . .	*Endeavour* (Imperial Chemical Industries, Ltd.)
†*J.I.E.E.* .	*Journal of the Institution of Electrical Engineers.*
J.F.I. . .	*Journal of the Franklin Institute.*

†*J.T.S.* . .	*Journal of the Television Society.*
†*M.R.* . .	*Marconi Review.*
P.I.R.E. .	*Proceedings of the Institute of Radio Engineers.*
R.N. . .	*Radio News.*
R.R. . .	*R.C.A. Review* (Radio Corporation of America).
†*R.S.G.B.* .	*R.S.G.B. Bulletin* (Radio Society of Great Britain).
S. . .	*Service.*
†*T.S.S.W.* .	*Television and Short Wave World.*
†*T.B.R.C.M.F.*	*Technical Bulletin of R.C.M.F.* (Radio Component Manufacturers' Federation).
T.T. . .	*Tele-Tech.*
†*W.E.* . .	*Wireless Engineer.*
†*W.W.* . .	*Wireless World.*

† = British, * = Australian, Others—American.

INDEX