TM 11-455

WAR DEPARTMENT TECHNICAL MANUAL

RADIO FUNDAMENTALS

WAR DEPARTMENT • 22 MAY 1944

This manual supersedes TM 11–455, 17 July 1941.

SECTION I

INTRODUCTION TO RADIO

1. General

a. The success or failure of any military mission depends on the efficiency of its communication system. In these days of high-speed warfare, rapid positive communication is more vitally important than ever before. The advent of mechanized warfare, made possible by the development of motor vehicles, airplanes and tanks, has created a demand for a fast, flexible, and mobile communication system, and radio is the only means of communication which will meet these requirements. The successful coordination of all the units which constitute a modern fighting force would be virtually impossible without radio communication. Hundreds of thousands of radio sets are used by the Army to direct our tanks in battle, detect the approach of hostile airplanes, bring our fighter airplanes into contact with the enemy, and direct our bombers to their targets and bring them safely home. Small portable sets provide instant communication for troops on foot, and powerful fixed stations transmit orders to commanders in the field. All of these sets must be properly operated and maintained; otherwise they will be worthless. The failure of but one radio set in the field may cause the failure of a mission and the loss of many lives.

b. Radio is not difficult to learn if the fundamentals are mastered step by step. A thorough knowledge of these important fundamentals enables a radio operator or technician to understand the equipment he handles and to obtain the best results from its use. Abbreviations common to radio communication work are used throughout this manual to accustom the reader to those terms which are used frequently in all radio publications. A list of these abbreviations and their meanings is given in appendix I.

2. Electrical Background

a. The basic laws which govern the electrical phenomena in radio communication systems are much the same as in ordinary power systems. A discussion of these basic principles of electricity is presented in TM 1–455, including a study of the current and voltage relationships in elementary direct-current (d-c) and alternating-current (a-c) cir-

cuits, with applications to power equipment and to measuring instruments. It is assumed that the student is thoroughly acquainted with the material contained in TM 1–455. Basic electrical principles are mentioned in this manual only to the extent necessary to show their application to the fundamentals of radio.

b. An elementary principle of radio transmission can be more easily understood if it is compared to the action of a transformer. (See TM 1–455.) If two coils are coupled together magnetically, and an alternating current is applied to one of the coils (known as the primary), a similar alternating current appears in the second coil (known as the secondary), even though there is no direct physical or mechanical connection between the two coils. In radio transmission a high-frequency (h-f) alternating current, which is known as *radio-frequency* (r-f) current, is applied to a wire known as the *transmitting antenna.* The r-f current flowing through this wire sets up a h-f magnetic field around the wire. If a second wire, known as the *receiving antenna,* is placed somewhere in the magnetic field of the transmitting antenna, r-f current will flow in this second wire. Thus the transmitting antenna corresponds to the primary of a transformer, and the receiving antenna corresponds to its secondary. The effect of the transmitting antenna on the receiving antenna is similar to the effect of the primary on the secondary of a transformer.

3. Frequencies of Communication

a. An a-c wave makes a number of complete cycles every second. The number of cycles per second (cps) determines the frequency of the wave. The frequencies which can be used for communication purposes may be divided into two broad groups: *audio frequencies* and *radio frequencies.*

b. Audio frequencies are those frequencies between about 15 and 20,000 cycles per second to which the human ear normally responds. Sounds which occur at frequencies below 20 cycles per second (such as the staccato tappings of a woodpecker) are recognizable more as individual impulses than as tones. The frequencies that are most important in rendering human speech intelligible fall approximately between 200 and 2,500 cycles per second. The fundamental range of a pipe organ is from about 16 to 5,000 cycles per second, and the highest fundamental note of the flute is about 4,000 cycles per second. Speech and music actually consist of very complicated combinations of frequencies of irregular and changing shape. These are harmonics, or overtones, which are multiples of the fundamental tone, or frequency, and give individual characteristics to sounds of the same fundamental frequency coming from different sources. Thus, a violin and a piano both emitting a 1,000-cycle tone would not sound alike, because of the presence of characteristic overtones. It has been determined by experiment that

the human ear responds best to sounds of about 2,000 cycles per second. Sound waves around 15,000 cycles per second and higher, such as those set up by very high-pitched whistles, are likely to be inaudible to the average ear. Audio frequencies are used to operate telephone receivers, loudspeakers, and other mechanical devices to produce sound waves which are audible to the ear. Although the audio frequencies cannot be used directly for transmission purposes, they play a large part in radio communication.

c. Radio frequencies extend from about 20 kilocycles (20,000 cycles) to over 30,000 megacycles (30,000,000,000 cycles). Since different groups of frequencies within this wide range produce different effects in transmission, radio frequencies are divided into groups, or bands, of frequencies for convenience of study and reference. The bands used for military purposes are shown in table I.

Table I

Band	Frequency range
Low-frequency (l-f)	30 to 300 kc.
Medium-frequency (m-f)	300 to 3,000 kc.
High-frequency (h-f)	3,000 to 30 mc.
Very-high-frequency (v-h-f)	30 to 300 mc.
Ultra-high-frequency (u-h-f)	300 to 3,000 mc.

Since these frequency bands have certain transmission characteristics, it is convenient to note the approximate results which may be expected from the use of various frequencies under normal operating conditions. These results are shown in table II.

Table II

Band	Range		Power required	Antenna length requirements
	Day	Night		
L-f	Long	Long	Very high	Long
M-f	Medium	Long	High to medium	Long
H-f (3 to 10 mc.)	Short	Medium to long	Medium	Medium
H-f (10 to 30 mc.)	Long	Short	Low	Short
V-h-f	Short	Short	Low	Very short

Long range: over 1,500 miles. Medium range: 200 to 1,500 miles. Short range: under 200 miles.

4. Relationship Between Radio Frequency and Wavelength

a. When r-f current flows through a transmitting antenna, radio waves are radiated from it in all directions in much the same way that waves travel on the surface of a pond into which a rock has been thrown. It has been found that these radio waves travel at a speed, or velocity, of 186,000 miles per second (equal to 300,000,000 meters per second). Radio waves are produced by sending a h-f alternating current through a wire. The frequency of the wave radiated by the wire will therefore be equal to the frequency, or number of cycles per second, of the h-f alternating current.

b. Since the velocity of a radio wave is constant regardless of its frequency, to find the wavelength (which is the distance traveled by the radio wave in the time required by one cycle) it is only necessary to divide the velocity by the frequency of the wave. This is an important relationship of radio communication.

$$\frac{300{,}000{,}000 \text{ (velocity in meters per second)}}{\text{Frequency (in cycles per second)}} = \text{Wavelength (in meters)}.$$

Example: To find the wavelength of a radio wave with a frequency of 100,000 cycles per second:

$$\frac{300{,}000{,}000}{100{,}000} = 3{,}000 \text{ meters.}$$

This same relationship can be expressed in another way. If the wavelength is known, the frequency can be found by dividing the velocity by the wavelength.

$$\frac{300{,}000{,}000 \text{ (velocity in meters per second)}}{\text{Wavelength (in meters)}} = \text{Frequency (in cycles per second)}.$$

Example: To find the frequency of a radio wave with a wavelength of 150 meters:

$$\frac{300{,}000{,}000}{150} = 2{,}000{,}000 \text{ cycles per second (or 2.000 kc).}$$

c. Radio waves are usually referred to in terms of their frequency. Since the frequencies employed in radio transmission extend from several thousand to many hundreds of millions of cycles per second, it is more convenient to refer to them in terms of *kilocycles* per second (kc) and *megacycles* per second (mc).

1 kc = 1,000 cycles per second.
1 mc = 1,000 kc = 1,000,000 cycles per second.

5. Elements of Radio Communication

a. In order to transmit messages from one location to another by radio, the following basic equipment is required. (See fig. 1.)

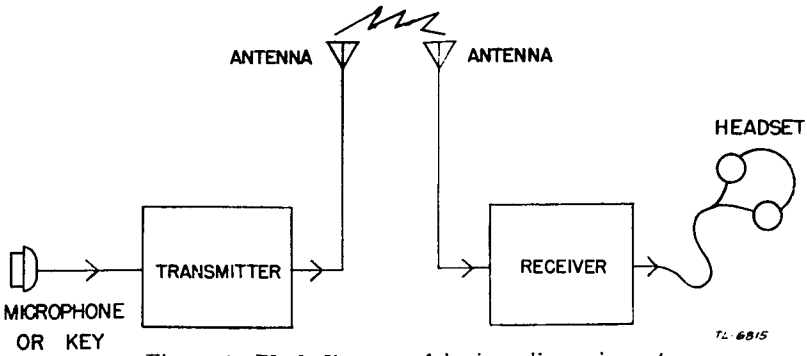

Figure 1. Block diagram of basic radio equipment.

(1) A *transmitter,* to generate r-f energy waves.
(2) A *key,* or *microphone,* to control these energy waves.
(3) A *transmitting antenna,* to radiate r-f waves.
(4) A *receiving antenna,* to intercept some of the radiated r-f waves.
(5) A *receiver,* to change the intercepted r-f waves into a-f waves.
(6) A *loudspeaker,* or *headphones,* to change the a-f waves into sound.

b. The simplest possible radio transmitter (fig. 2) consists of a power supply and a device known as an *oscillator,* for generating r-f alternating current. The power supply may consist of batteries, a

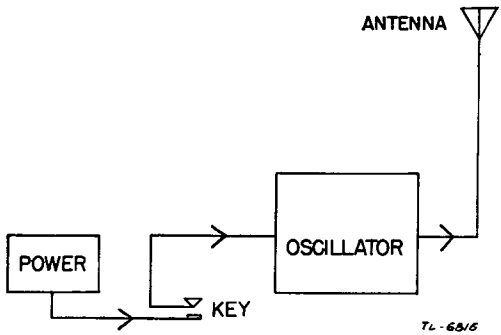

Figure 2. Block diagram of simple radio transmitter.

generator, or an a-c-operated power source. In order to tune such a transmitter to the desired operating frequency, the oscillator must contain a tuned circuit. It is also necessary to have some method of controlling the r-f energy generated by this transmitter, if messages are to be sent by this means. The easiest way of doing this is to use a telegraph key (which is merely a type of switch for controlling the flow of electric current) connected in series with the power supply and the oscillator. When the key is operated, the power applied to the oscillator to establish a flow of current is turned on and off for varying lengths of time, to form dots or dashes of r-f energy. Since the output

power, or r-f energy, generated by this oscillator is normally not great enough to permit transmission over long ranges, it is seldom used alone as a radio transmitter. In order to increase, or amplify, the output of

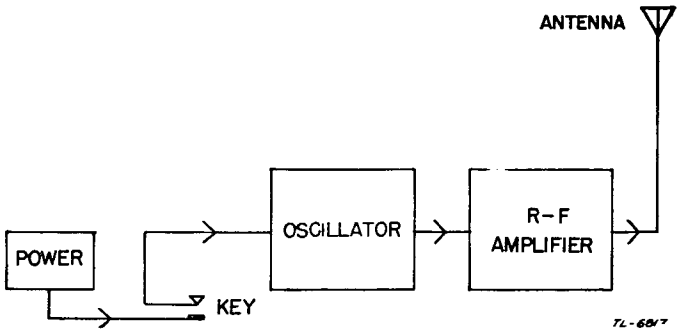

Figure 3. Block diagram of oscillator-amplifier transmitter.

the oscillator, a device known as a *r-f amplifier* is generally used in modern radio transmitters. The addition of this stage is shown in figure 3. Such a transmitter is entirely satisfactory for practical purposes where only radiotelegraph or code transmission is desired. In order to transmit messages by voice, however, it is necessary to find some way of controlling the output of the transmitter in accordance with the voice frequencies (audio frequencies). In modern radiotelephone transmitters this is done by means of a modulator, which increases or decreases the output of the transmitter in accordance with

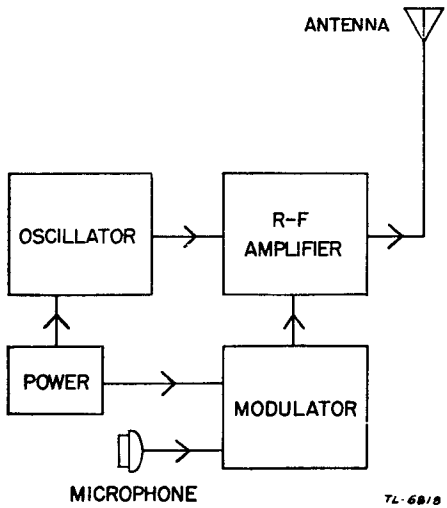

Figure 4. Block diagram of radiotelephone transmitter.

the voice frequencies generated when speech enters a microphone. This process is known as *modulation,* and a r-f wave affected in this manner

is known as a *modulated wave.* Figure 4 shows the addition of the modulator and microphone required to change the radiotelegraph transmitter into a radiotelephone transmitter.

c. The radio receiver operates in a manner different from that of the transmitter just discussed. Consider the diagram of a simple radio receiver. (See fig. 5.) Radio-frequency waves (from a transmitter) are reaching the antenna of the receiver. If a pair of headphones (headset) is connected directly to the receiving antenna in an attempt to receive the incoming radio waves, the attempt would not be successful, because the human ear will not respond to radio frequencies. A method is therefore needed whereby intelligence in the form of audio-frequency waves can be extracted from radio-frequency waves, and converted into sound by a headset. The circuit which is used in radio receivers to

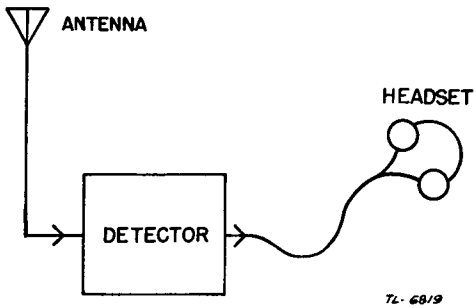

Figure 5. Block diagram of simple radio receiver.

accomplish this is known as a *detector,* since it actually detects the incoming signal (radio wave). Since it is known that the radio transmitter is sending out radio waves of a certain frequency, the receiver must have some means of tuning in, or selecting the frequency of the desired radio wave. This is necessary to avoid receiving many radio signals of different frequencies at the same time. That part of a detector which is used to tune in the desired signal is called a *tuned circuit.* Because a radio signal diminishes in strength, or amplitude, at a very rapid rate after it leaves the transmitting antenna, it is

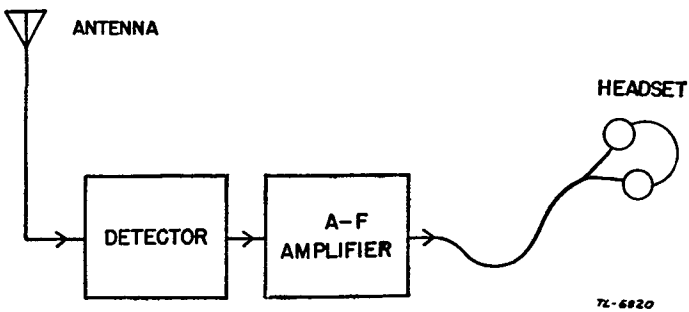

Figure 6. Block diagram of detector and a-f amplifier.

seldom possible to use a detector alone to tune in the desired signal. The greater the distance between the transmitting and receiving antennas, the greater will be the reduction, or loss, in signal strength. By the time it reaches the receiver, the signal may be so weak that the sound in the headset is too faint to be understood. The actual r-f signal voltage picked up by a receiving antenna in normal communication work is usually only a few microvolts, or millionths of a volt. In order to increase the level of the a-f output of the detector to obtain satisfactory headset operation, an a-f amplifier is used in most radio sets. Figure 6 shows an a-f amplifier added to the simple radio receiver. If it is desired to increase the sensitivity (ability to receive weak signals) of the receiver still more, it will be necessary to amplify the r-f signal before it reaches the detector. This is done by the use of an r-f amplifier. Since the r-f amplifier, like the detector, is provided with

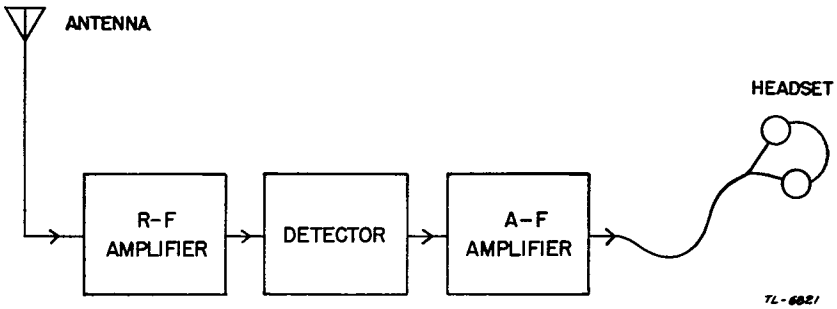

Figure 7. Block diagram of complete radio receiver.

one or more tuned circuits, so that it amplifies *only* the desired signal, the addition of an r-f amplifier to the receiver gives not only greater sensitivity, but also greater selectivity (ability to separate signals). The essentials of a modern radio receiver are shown in figure 7.

SECTION II

CIRCUIT ELEMENTS AND SYMBOLS

6. Simple Circuits

a. It has been shown that radio transmitters and receivers are made up of a number of circuits, each of which has a definite job to do in the operation of the whole. The failure of one part in any of these various circuits can cause the failure of the entire radio set. It is therefore necessary to study carefully such circuits and their individual parts.

b. There are three general types of electrical circuits, known as *series* circuits, *parallel* circuits, and *series-parallel* circuits, depending on the arrangement of parts. (See fig. 8.) The principle of operation of these

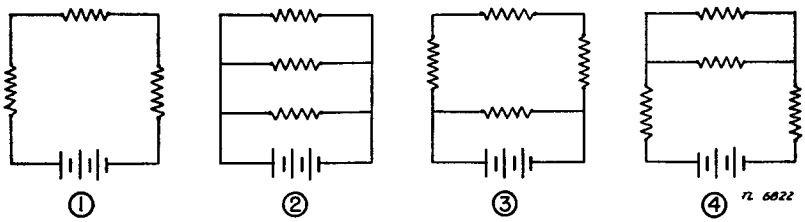

① *Series-connected circuit.*
② *Parallel-connected circuit.*
③, ④ *Series-parallel, combination circuits.*
Figure 8. Simple circuits.

simple circuits is discussed in TM 1–455. A simple relationship, known as Ohm's law, exists between the voltage, current, and resistance in electrical circuits. The student should become thoroughly familiar with all three forms of Ohm's law, since it is very useful in determining the voltage, current, or resistance in an electrical circuit. When any two of these values are known, the third can easily be found.

c. Ohm's law simply states that *the current flowing in a circuit is equal to the voltage applied to the circuit divided by the resistance.*

$$I \text{ (amperes)} = \frac{E \text{ (volts)}}{R \text{ (ohms)}}.$$

This is the form that is used when the voltage applied to the circuit and the resistance of the circuit are both known, and the value of the current flowing in the circuit is wanted.

Example: If 500 volts are applied to a circuit which has a resistance of 5,000 ohms, the current in the circuit will be—

$$I = \frac{500}{5{,}000} = \frac{1}{10} = 0.1 \text{ ampere.}$$

d. If the current and the resistance of the circuit are known, the voltage applied to the circuit can be found by use of the second form of Ohm's law, which states that *the current times the resistance equals the voltage.*

$$E \text{ (volts)} = I \text{ (amperes)} \times R \text{ (ohms)}.$$

Example: If a current of 3 amperes is flowing through a circuit having 70 ohms resistance, the voltage applied to the circuit will be—

$$E = 3 \times 70 = 210 \text{ volts.}$$

e. If the values of the current and voltage are known, the resistance of the circuit can be found by the third form of Ohm's law, which states that *the resistance equals the voltage divided by the current.*

$$R \text{ (ohms)} = \frac{E \text{ (volts)}}{I \text{ (amperes)}}.$$

Example: If a current of 0.25 ampere flows in a circuit to which 100 volts is applied, the resistance of that circuit will be—

$$R = \frac{100}{0.25} = 400 \text{ ohms.}$$

f. D-c circuits and a-c circuits are dealt with separately in TM 1–455, and no attempt is made to consider circuits in which both direct current and alternating current are present at the same time. Since both direct current and alternating current are present simultaneously in most radio circuits, it is important to understand the manner in which the various parts of a radio circuit control the current flow.

7. Circuit Elements

Any radio circuit is a combination of parts arranged to control the flow of current in such a manner that certain desired results are produced. These parts are called circuit elements. The three main circuit elements used in radio work are *resistors, inductors,* and *capacitors.*

8. Resistors

a. A resistor is a circuit element designed to introduce resistance into the circuit, so as to reduce or control the flow of current. Resistors may be divided into three general types, according to their construction. These are known as *fixed resistors, adjustable resistors,* and *variable resistors.*

b. Fixed resistors are used to introduce a constant value of resistance into a circuit. Their size and construction are determined by the

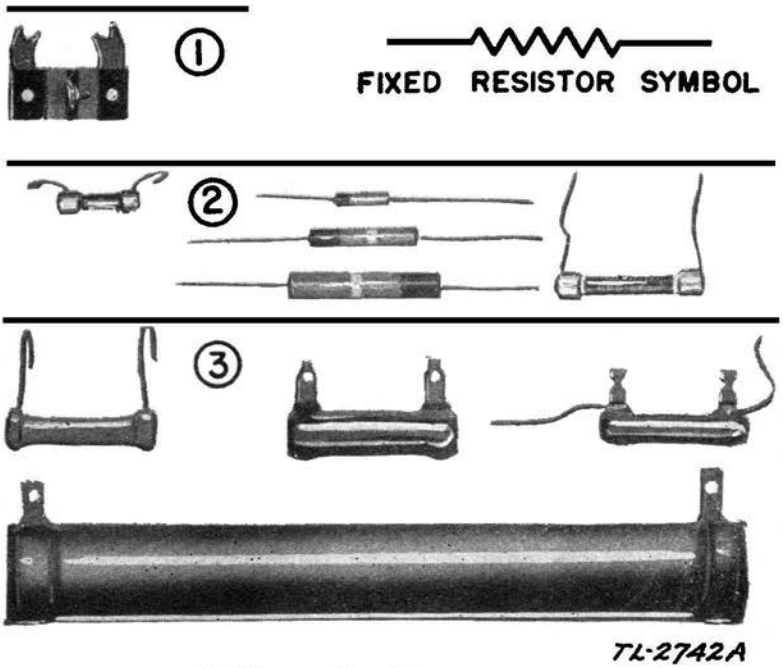

① *Wire-wound resistor.*
② *Low-wattage carbon resistors.*
③ *High-wattage carbon resistors.*
Figure 9. Fixed resistors.

amount of power they must carry. For low-power requirements, small carbon or metallized resistors are used; where heavier power must be carried, larger resistors of wire-wound construction are employed. Several types of fixed resistors are shown in figure 9, together with the symbol which is used to represent them on circuit diagrams. Fixed resistors are often provided with colored markings to indicate their resistance value and accuracy (tolerance). This system of marking, called the Resistor Color Code, is simple, and should be memorized for future reference. Table III shows the complete Resistor Color Code, and gives several examples of its use. When a color-coded fixed resistor does not bear either a gold or silver tolerance marking, it should be remembered that the resistor is only accurate to within 20 percent of its marked value in ohms. Large fixed resistors, for use in highpower circuits, are found without the color coding, but the value in ohms generally is printed somewhere on the resistor.

c. Adjustable resistors are used where it is necessary to change or adjust the value of the resistance in a circuit from time to time. In its

usual form, the adjustable resistor is wire-wound, and has one or more sliding collars which may be moved along the resistance element to select any desired resistance value. It is then clamped in place. Figure 10① shows an adjustable resistor.

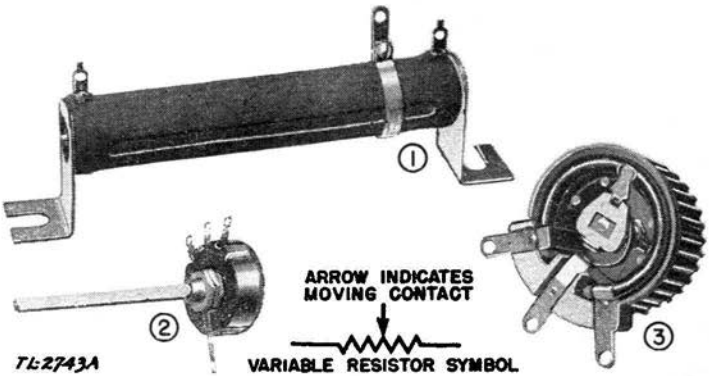

① *Adjustable power resistor.*

② *Potentiometer for volume control.*

③ *Potentiometer for power supply.*

Figure 10. Adjustable and variable resistors.

d. Variable resistors are used in a circuit when a resistance value must be changed frequently. Depending on the power requirements, variable resistors are either of carbon or wire-wound construction. The actual resistance element of the variable resistor is usually circular in shape, and the sliding tap, or "arm," which makes contact with it is provided with a knob and a shaft, by means of which the resistance can be varied smoothly. If both ends of the resistance element are provided with connection terminals (in addition to the sliding arm) the

Table III. Resistor Color Code.

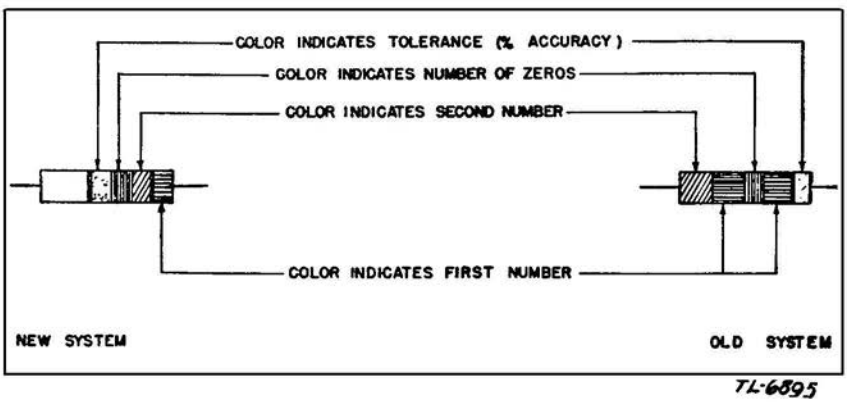

Color	*Number*	
Black	0	
Brown	1	
Red	2	
Orange	3	
Yellow	4	
Green	5	
Blue	6	
Violet	7	
Gray	8	
White	9	
Gold	5	percent accuracy
Silver	10	percent accuracy

NOTE. If no gold or silver marking appears (to indicate tolerance) accuracy is 20 percent (standard tolerance).

Example: A 50,000-ohm resistor, of standard tolerance, would be indicated by a green ring (5), a black ring (0), and an orange ring (000), as shown in the new system of marking above. In the old system of marking, shown above on the right hand side of the page, the resistor would be painted green (5), with a black end (0), and an orange dot or ring in the center (000).

variable resistor is called a *potentiometer*. Figure 10② shows a potentiometer used as a volume control for a radio receiver; figure 10③ shows a potentiometer wound of heavier wire for use in a power supply circuit. If only one end of the resistance element and the sliding arm are brought out to connection terminals, the variable resistor is called a *rheostat*. The symbol for adjustable resistors is the same as that for variable resistors.

9. Resistance Calculations

a. In repairing radio sets it is sometimes found that the exact replacement parts are not at hand. It then becomes necessary to use whatever parts are available to make the repair. This is particularly true in the case of resistors, since many different resistors of different values and sizes are required in transmitters and receivers. A repair depot would have to carry thousands of resistors in stock at all times, to have on hand the exact replacements required for the repair of radio equipment in the field. Obviously this is not possible, and the competent radio repairman must know how to calculate the resistance values of combinations of resistors (in series and parallel) so that he can use available resistors to make emergency repairs.

b. The total resistance of several resistors connected in series *is equal to the sum of the resistances of the individual resistors.*

$$R_t \text{ (total)} = r_1 + r_2 + r_3.$$

Example: The total resistance of three resistors connected in series, the values of which are 50,000 ohms, 100,000 ohms, and 250,000 ohms respectively, will equal—

$$R_t = 50{,}000 + 100{,}000 + 250{,}000 = 400{,}000 \text{ ohms.}$$

c. If several resistors of equal value are connected in parallel, the

total resistance *will equal the value of one resistor divided by the number of resistors.*

$$R_t \text{ (total)} = \frac{r \text{ (of one resistor)}}{n \text{ (No. of resistors)}}.$$

Example: If five 50,000-ohm resistors are connected in parallel, the effective resistance of the combination will equal—

$$R_t = \frac{50{,}000}{5} = 10{,}000 \text{ ohms.}$$

If several resistors of unequal values are connected in parallel, *the reciprocal of the total resistance* (one divided by the total resistance) *will be equal to the sum of the reciprocals of the individual resistors.*

$$\frac{1}{R_t} = \frac{1}{r_1} + \frac{1}{r_2} + \frac{1}{r_3}.$$

Example: The *total* resistance of three resistors connected in parallel, the resistances of which are 40,000 ohms, 20,000 ohms, and 8,000 ohms, respectively, will equal—

$$\frac{1}{R_t} = \frac{1}{40{,}000} + \frac{1}{20{,}000} + \frac{1}{8{,}000}$$

$$= \frac{1}{40{,}000} + \frac{2}{40{,}000} + \frac{5}{40{,}000}$$

$$\frac{1}{R_t} = \frac{8}{40{,}000} = \frac{1}{5{,}000}$$

$$R_t = 5{,}000 \text{ ohms.}$$

d. When current flows through a resistance, part of the electrical energy is changed into heat; thus it is said that a resistance consumes power. A resistor in a circuit consumes power according to the voltage applied to it and the current which flows through it. This is a power loss (since heat produced by a resistor in a radio circuit is of no use), and is known as the *dissipation* of the resistor. It is very important to know how much power a given resistor dissipates in a given circuit in order to make any repairs to the circuit. If a replacement resistor cannot safely dissipate the required power, it will overheat and possibly burn out; and the high heat it radiates may damage other parts. For this reason resistors are rated in watts dissipation, so that the maximum power a resistor will dissipate is known. Thus, a 2-watt resistor can safely dissipate up to 2 watts of power, and a 5-watt resistor can safely dissipate up to 5 watts. It is advisable when replacing defective resistors to use resistors capable of dissipating more than the known power of the circuit; a safe rule is to use resistors rated at least 1½ times the required power.

e. To determine the *power dissipation in watts* when the voltage and current are known, *multiply the voltage by the current.*

$$P \text{ (watts)} = E \text{ (volts)} \times I \text{ (amperes)}.$$

Example: If 50 volts applied to a given resistor cause a current of 0.5 ampere to flow through it, the power dissipation of the resistor will be equal to—

$$P = 50 \times 0.5 = 25 \text{ watts}.$$

When the value of the resistance and the current through the resistor are known, *multiply the current squared* (the current times itself) *by the resistance to obtain the power dissipation in watts.*

$$P = I^2 \times R.$$

Example: If a current of 2 amperes flows through a resistance of 10 ohms, the power dissipation in watts will be equal to—

$$P = 2^2 \times 10 = 2 \times 2 \times 10 = 40 \text{ watts}.$$

f. Resistance offered to the flow of current by a resistor is the same for both alternating current and direct current. In the case of alternating current, the resistance remains the same regardless of frequency.

10. Reactance

a. Two other circuit elements, inductors and capacitors, are also used to oppose the flow of current in circuits containing both alternating current and direct current. However, this opposition, unlike the resistor just studied, is not the same for both alternating current and direct current. The inductor or capacitor reacts in a different way to various a-c frequencies; in other words, the opposition to the flow of current does not remain constant as the a-c frequency is varied.

b. In the case of the inductor, the opposition offered to the flow of alternating current will become greater if the frequency is increased. In the case of the capacitor, the effect is just the opposite, and the opposition will decrease as the frequency is increased. This opposition that a capacitor or inductor offers to the flow of alternating current is known as its *reactance.* The reactance of an inductor is called *inductive reactance;* the reactance of a capacitor is called *capacitive reactance.* Both inductive reactance and capacitive reactance are measured in ohms.

11. Inductors

a. An *inductor* is a circuit element designed to introduce a certain amount of inductive reactance into a circuit. An inductor may take any number of physical forms or shapes, but basically it is nothing more nor less than a *coil* of wire. The unit of inductance measurement

is the ***henry,*** and the terms ***millihenry*** and *microhenry* are also used. One henry is equal to 1,000 millihenrys, which in turn are equal to 1,000,000 microhenrys. The inductance of an air-core coil increases as the size of the coil or the number of turns of wire is increased. The use of magnetic metal (such as iron) for the core of the coil will increase its inductance; a nonmagnetic metal (such as brass or copper) will decrease the inductance. The inductive reactance of any coil is increased as its inductance is increased. There are three general types of inductors: fixed, adjustable, or variable.

b. Fixed inductors have a constant value of inductance in a circuit. Most of the coils used in radio work are of the fixed type. The coils used in the tuned circuits of radio transmitters and receivers usually have air cores. The number of turns of wire depends on the frequency range to be covered. The only difference between transmitting and receiving inductors is in their size, since transmitting coils must stand considerably more current and voltage than those used in receivers. A typical transmitting coil is shown in figure 11①, and consists of a single winding of heavy wire.

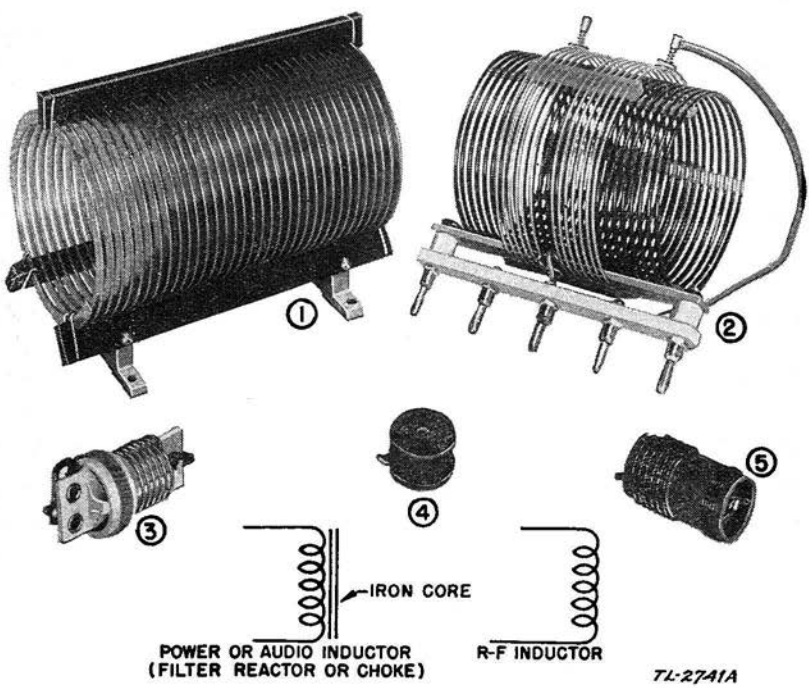

① *Single-winding tank inductor for high-power transmitters.*
② *Plug-in type r-f transformer for medium-power transmitters.*
③ *and* ⑤ *Small r-f transformers used in h-f receivers and transmitters.*
④ *Small r-f inductor or choke coil used in receivers or low-power transmitters.*

Figure 11. Typical r-f inductors and transformers.

c. Adjustable inductors found in modern radio equipment are of two main types. The first, and simplest, consists of a coil which is provided with several taps and a switch, or clip, so that the inductance may be adjusted in several steps. This type is found mainly in the antenna circuit of radio transmitters, where it is desirable to adjust the inductance of the coil to suit the varying requirements of different antenna lengths. In the second type, the coil is provided with a magnetic core, which may be moved in or out by means of an adjustable

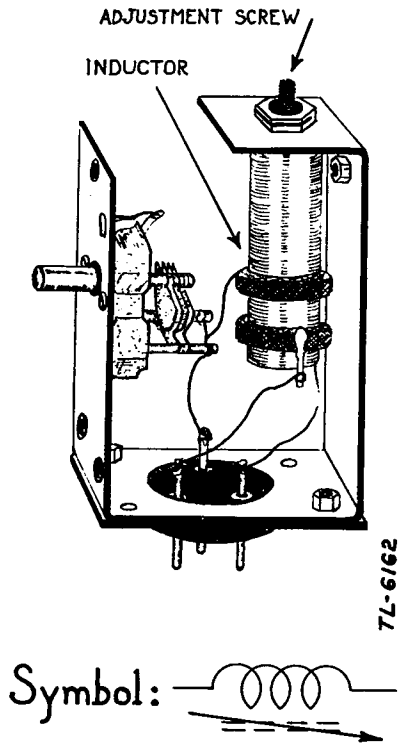

Figure 12. Permeability-tuned inductor.

setscrew. This type of adjustable inductor, known as a *permeability-tuned inductor,* is sometimes used in transmitters and receivers in tuned circuits intended to operate at only one frequency. Figure 12 shows the use of a permeability-tuned inductor in a tuned-circuit assembly, and gives the symbol by which this type of adjustable inductor is represented on circuit diagrams.

d. Variable inductors are found principally in the antenna circuits of radio transmitters. They usually consist of two coils connected in series, and are so constructed that one coil may be rotated within the other and the inductance consequently varied. Such inductors are called *variometers.*

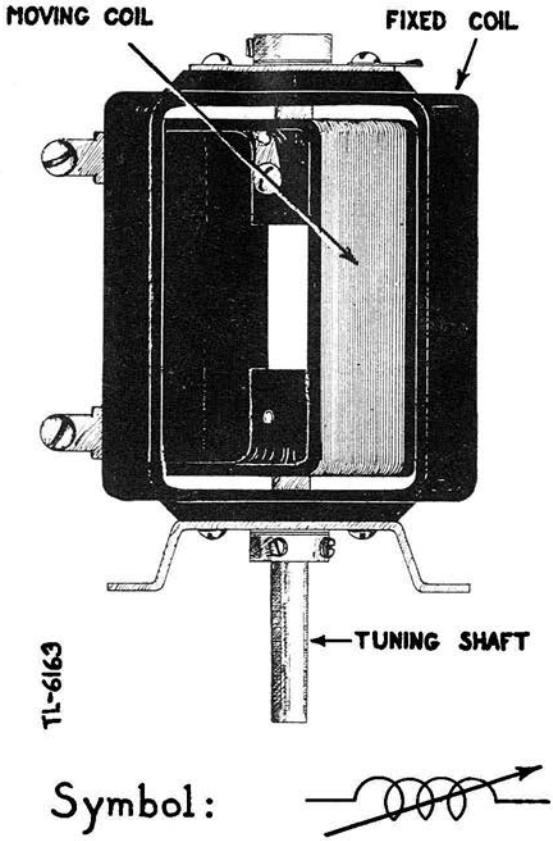

Figure 13. Variometer.

Figure 13 shows a typical variometer and gives the symbol for representing variable inductors on circuit diagrams.

e. A *choke coil* is a fixed inductor possessing the desirable property of showing a high reactance to the flow of alternating current, while showing a very low resistance to the flow of direct current. Thus, a choke coil will easily pass direct current but will try to block or "choke" off the passage of alternating current. Very small air-core choke coils are used to prevent r-f alternating current from flowing in d-c circuits. Large iron-core choke coils are used in a-f circuits, and as filter chokes in power supply circuits. Figure 14② shows two small r-f choke coils and their symbol. An iron-core filter choke is also shown, with its appropriate symbol, in figure 14①.

12. Transformers

a. If two coils are placed near to each other so that the field created by one coil will pass through the windings of the other, a transformation effect will result, since one coil transfers energy from itself to the

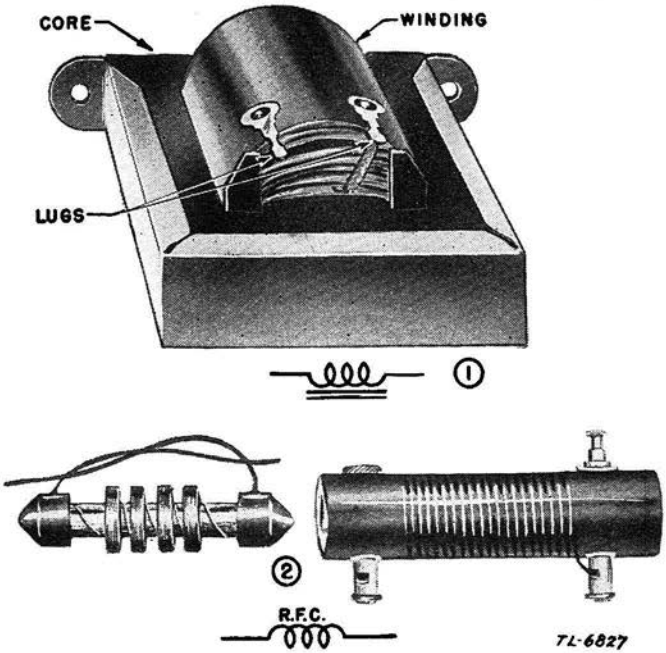

① *A-f filter choke.*
② *R-f chokes.*
Figure 14. Choke coils.

other coil. For example, if one coil has an a-c generator connected to it, the varying lines of magnetic force from the one coil will cut through the second winding, causing a voltage to be induced (or originated) in the second coil, even though there is no metallic connection between the windings. The coil producing the original magnetic field (or lines of force) is called the *primary,* and the coil in which the voltage is induced is the *secondary;* the two coils in inductive relations to each other are called a *transformer.* In radio there are three general groupings of transformers according to application: *power transformers, a-f transformers,* and *r-f transformers.* The power and a-f transformers have cores of magnetic materials, usually some form of iron. The r-f transformers are generally of air-core design. However, very small magnetic cores, usually consisting of powdered iron, are used in some low-frequency r-f transformers, known as *intermediate-frequency (i-f) transformers.* Several different types of transformers with their corresponding circuit diagram symbols are shown in figures 11 and 15.

b. Power transformers used in radio receivers and transmitters transform the line voltage (usually 110–120 volts) to either higher or lower voltages. When the voltage is raised the transformer is called a step-up transformer; when the voltage is reduced the transformer is called a step-down transformer. Power transformers having both

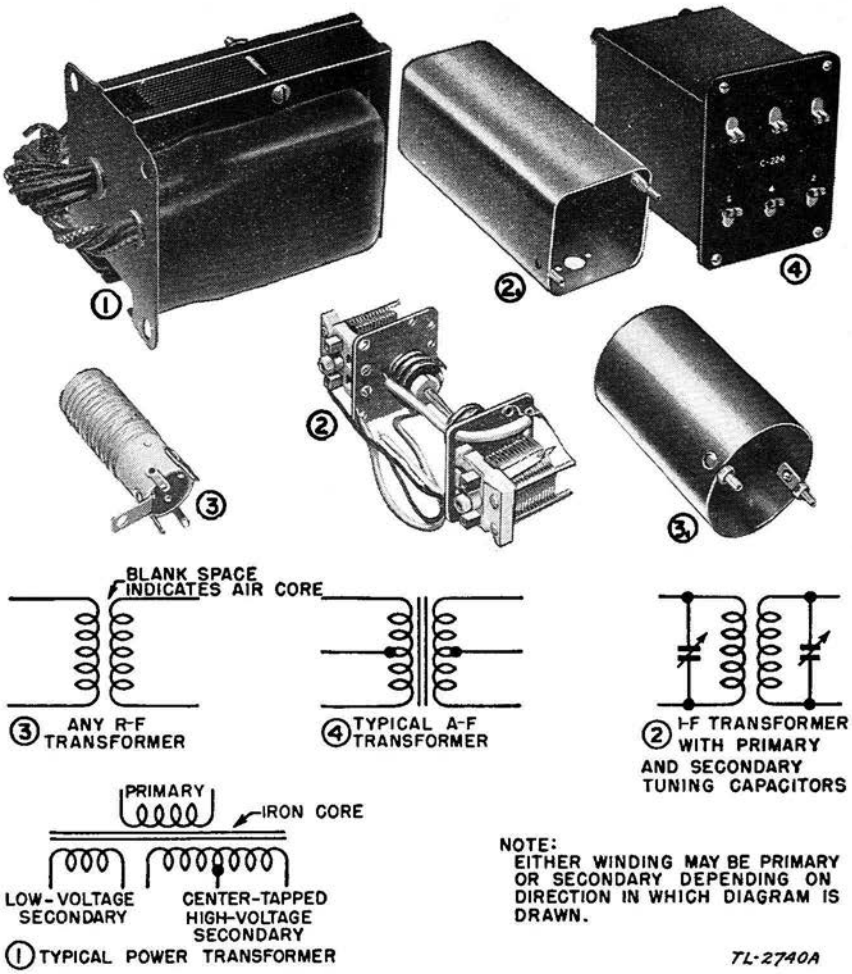

① *Multi-winding power transformer. (Leads from the various windings protrude through holes in bottom of case.)*

② *I-f transformer, with attached midget variable air capacitors for tuning the primary and secondary windings. (This assembly fits inside the square aluminum can 2_1.)*

③ *R-f transformer. (This assembly is mounted in the round aluminum can 3_1.)*

④ *A-f transformer of push-pull output type.*

Figure 15. Typical transformers.

step-up and step-down windings on the same core are widely used; such a transformer is shown in figure 15①.

c. Audio-frequency transformers are used to transfer voltages of wide a-f range, rather than voltages of a single frequency, as in the case of a power transformer. A-f transformers have iron cores, and must be able to carry a limited amount of direct current in the primary windings without effecting a-c audio frequency. A typical a-f transformer is shown in figure 15②.

d. Radio-frequency transformers are used to transfer r-f voltages, and are usually designed to operate on one particular frequency. Receiver transformers are quite small in size, and generally have air cores (figs. 11③, ④, and ⑤, and 15③).

e. When r-f transformers are used for transferring radio frequencies which are low compared to the signal frequency (as in the case of a superheterodyne receiver, which will be discussed later), the device is known as an *intermediate-frequency (i-f) transformer* (fig. 15④). I-f transformers operate on a single frequency, and may have powdered iron cores.

f. Autotransformers consist of only a single coil. It is possible to obtain transformer action with such a coil if a connection is made somewhere along the winding between the extreme ends. If a step-up voltage effect is desired, the winding between the tap and one end is considered the primary, and the entire winding acts as the secondary. If a step-down effect is desired, the entire winding is considered the primary, and the section between the tap and one end acts as the secondary. Autotransformers are used in power circuits.

13. Capacitors

a. A *capacitor* is a circuit element designed to introduce capacitive reactance in a circuit. In radio work the units of capacitance are the *microfarad* (abbreviated μf or mf) and the micromicrofarad (abbreviated $\mu\mu$f or mmf). One microfarad is equal to 1,000,000 micromicrofarads. A capacitor is formed by two or more metallic plates separated by an insulating material called a *dielectric.* The capacitance of a capacitor is increased as the area of the plates is increased; the capacitance is decreased, however, as the distance between the plates is increased. The capacitive reactance becomes smaller as the capacitance is increased. This is just the opposite of what happens in the case of the inductor, where the inductive reactance increases as the inductance is increased. If an ordinary battery is connected to the two terminals of a capacitor, the capacitor will become charged and will hold the charge for a length of time depending on the insulating material used for the dielectric. If the dielectric is an excellent insulator, the capacitor will hold the charge for a long time, and is then said to have low *leakage.* There are three general types of capacitors: *fixed, adjustable,* and *variable.*

b. Fixed capacitors have a fixed value of capacitance in a circuit, and the majority of the capacitors used in radio are of this type. Many types of construction are found, depending chiefly on the voltage rating desired and the amount of leakage permissible in the dielectric. Fixed capacitors are generally named after the type of dielectric used in the construction. The main types of fixed capacitors are: *mica capaci-*

tors, paper capacitors, and *electrolytic capacitors.* These different types of fixed capacitors are shown in figure 16.

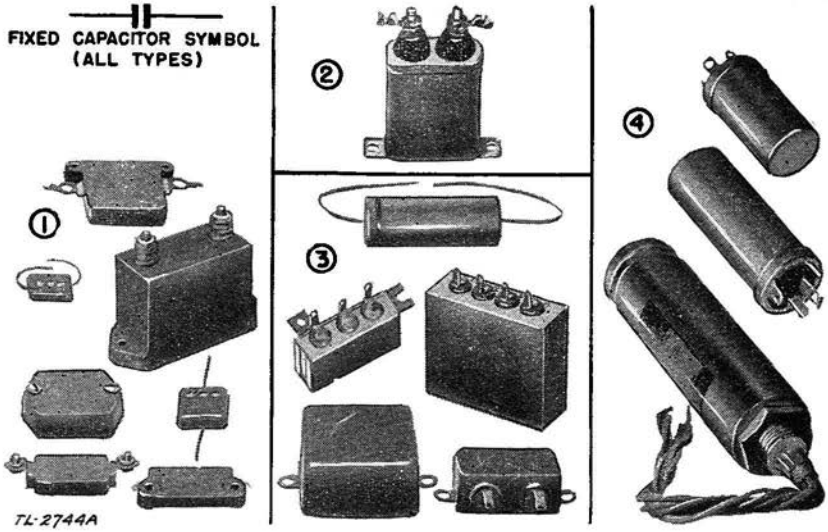

① *Mica dielectric.*
② *Paper dielectric, oil-impregnated.*
③ *Paper dielectric, wax-impregnated.*
④ *Electrolytic.*
Figure 16. Typical fixed capacitors.

c. Mica capacitors are used mainly in the r-f circuits of transmitters and receivers. Low leakage is an important requirement of such circuits. Therefore, mica is used as the dielectric, because it is one of the best known insulating materials. Mica capacitors are seldom found with capacitance values greater than 0.05 microfarad, and they generally have high voltage ratings. Mica capacitors, like fixed resistors, are often color-coded to indicate their value of capacitance. (A complete explanation of the mica capacitor color code is given in table IV.)

Table IV. Mica Capacitor Color Code.

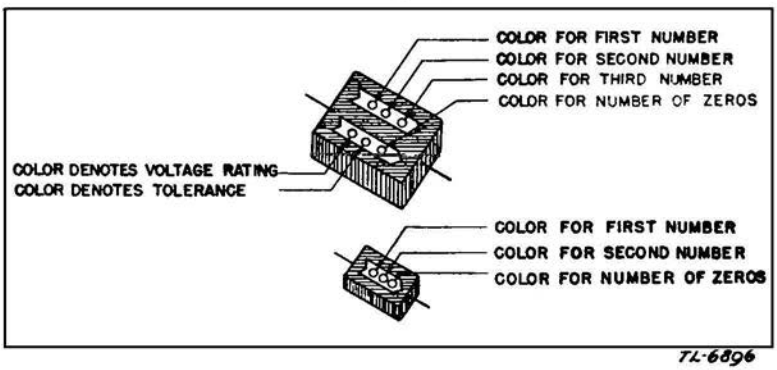

Color	*Number*
Black	0
Brown	1
Red	2
Orange	3
Yellow	4
Green	5
Blue	6
Violet	7
Gray	8
White	9
Gold	5 percent accuracy
Silver	10 percent accuracy

NOTE. All values of capacitance are given in micromicrofarads. All voltage ratings are expressed in hundreds of volts.

d. Paper capacitors consist of tinfoil and paper rolled together and impregnated with wax to exclude moisture. They are widely used in circuits where extremely low leakage is not important, such as a-f amplifier circuits, power supply circuits, and some r-f amplifier circuits.

e. Electrolytic capacitors depend on a chemical action within them to produce a very thin film of oxide as the dielectric. Consequently, these capacitors are polarized; that is, they have a positive and a negative terminal which must be properly connected in a circuit. Improper connections will damage the oxide film and short the capacitor. Since these capacitors depend on a chemical action which takes place when current flows through them to produce their dielectric, electrolytic capacitors have much higher leakage than either mica or paper capacitors. The principal advantage of electrolytic capacitors is that, for their size, they have a much larger capacitance than the other forms of capacitors. They are used chiefly in power supplies where leakage is not important.

f. Adjustable capacitors are used wherever it is necessary to adjust the capacitance of a circuit from time to time. These adjustable capacitors are sometimes known as *trimmers,* and are widely used for very fine adjustments of the tuning of a radio receiving set (known as

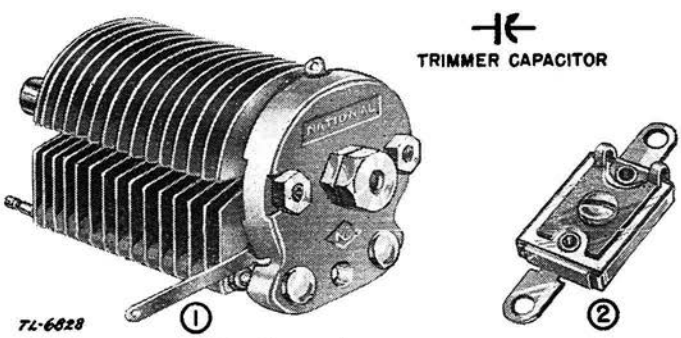

① *Air-tuned.*
② *Mica-tuned.*
Figure 17. Trimmer capacitors.

aligning). They are also often used for tuning circuits which operate on only one frequency. Adjustable capacitors, or trimmers, are of two types: mica-tuned or air-tuned, according to the dielectric employed. Figure 17 illustrates both types of trimmers.

g. Variable capacitors are used in a circuit wherever the capacitance of a circuit must be continuously variable. They are used as tuning controls in practically all radio receivers and transmitters. Most variable capacitors used in communication circuits are of the air dielectric type. A single variable capacitor consists of two sets of metal plates insulated from each other and so arranged that one set of plates can be moved in relation to the other set. The stationary plates are the stator; the movable plates, the rotor. If several variable capacitors are connected on a common shaft so that all may be controlled at the same time, the result is known as a *ganged capacitor.* The capacitance range of variable air capacitors is from a few micromicrofarads to several hundred. A typical group of variable capacitors is shown in figure 18, with the appropriate symbols for this circuit element.

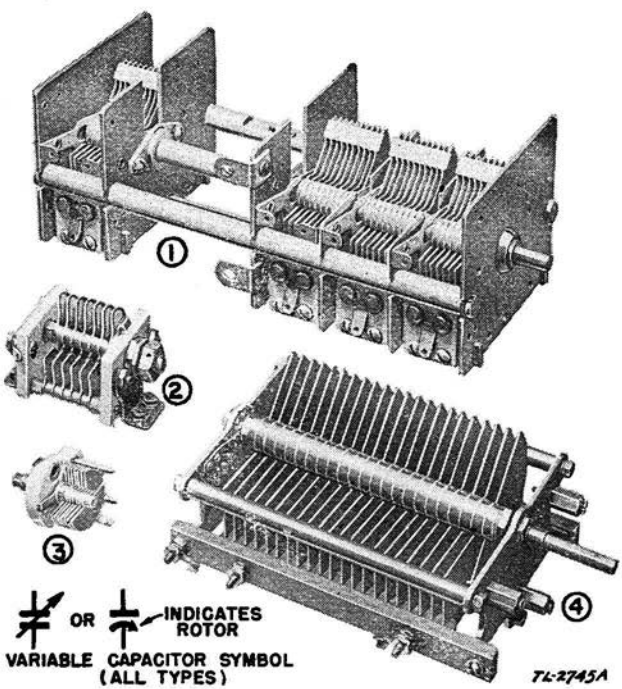

① *Four-gang receiving type.*
② *H-f transmitting type.*
③ *Trimmer, or padder type.*
④ *High-power transmitting type.*
Figure 18. Typical variable capacitors.

h. The *principle of bypass and blocking capacitors* is important for an understanding of the action of a capacitor in any circuit. Although a

capacitor due to the insulating properties of its dielectric, will not allow direct current to flow in a circuit, it will pass alternating current, since the capacitor charges and discharges in accordance with the frequency of the applied a-c voltage. The higher the frequency, the lower the reactance, and therefore the greater the current flow through the capacitor. This effect is just the opposite of that of the choke coil, which passes direct current, but presents a high reactance to the flow of alternating current. In some circuits, alternating current should not flow through a particular circuit element. By connecting a capacitor across (in parallel with) that element, a path of low opposition for the alternating current is provided; this bypasses the alternating current around the element while either the direct current or the low-frequency (l-f) alternating current flows through the element. In still other cases, no direct current should flow through a particular part of the circuit. A capacitor is therefore connected in series with the circuit, thus blocking the flow of direct current while allowing the comparatively free passage of the alternating current.

i. The voltage ratings of capacitors are of much the same importance as the power ratings for resistors. In addition to their capacitance, capacitors are rated as to their d-c working voltage, which is the maximum safe operating voltage for the capacitor. Under no circumstances should a capacitor be used in a circuit in which the voltage may exceed the rated working voltage. The safest rule to follow when replacing a defective capacitor in a radio set is to use a capacitor the working voltage of which is at least 1½ times as great as the highest voltage expected in the circuit.

14. Capacitance Calculations

a. To make replacement repairs in the field, it is necessary to know how to determine the capacitance of capacitors when connected in series and in parallel, since, as in the case of resistors, a capacitor of exactly the right value may not be available.

b. For capacitors in series, the total amount of capacitance is found in exactly the same way as for resistors in parallel.

$$\frac{1}{C\ (\text{total})}=\frac{1}{c_1}+\frac{1}{c_2}+\frac{1}{c_3}.$$

Example: Determine the total capacitance of the following three capacitors connected in series: 200 μf, 100 μf, and 400 μf.

$$\frac{1}{C}=\frac{1}{200}+\frac{1}{100}+\frac{1}{400}$$

$$=\frac{2}{200}+\frac{4}{400}+\frac{1}{400}=\frac{7}{400}$$

$$C=\frac{400}{7}=57 \text{ microfarads.}$$

The d-c working-voltage rating for capacitors in series is equal to the *sum* of the ratings of the individual capacitors.

c. For capacitors in parallel, the total amount of capacitance is found by adding the values of each of the capacitors. This is the same rule as for resistors in series.

$$C \text{ (total)} = c_1 + c_2 + c_3.$$

Example: Determine the total capacitance of the following capacitors connected in parallel: 0.0005, 0.001, 0.0001, and 0.01 microfarad, respectively.

$$C = 0.0005 + 0.001 + 0.0001 + 0.01 = 0.0116 \text{ microfarad.}$$

The d-c working-voltage rating of a combination of capacitors in parallel is equal to that of the capacitor with the *lowest* working-voltage rating.

15. Operation of Circuit Elements

a. Following the study of the individual properties and characteristics of the three circuit elements, *resistance, inductance,* and *capacitance,* it will now be shown how these circuit elements operate in an actual circuit. Figure 19 shows a circuit containing all three circuit elements, so arranged that if switch S–1 is closed, direct current will be applied to the circuit, and if switch S–2 is closed, alternating current will be applied to the circuit. The *ground* symbol shown on the diagram indicates that all points in the circuit so marked with this symbol are connected to a metal *chassis,* or base, on which the circuit is constructed; thus, all points bearing the ground symbol are actually connected together (via the metal in the chassis). This chassis ground symbol is used quite frequently in circuit diagrams to indicate that a part or a circuit element is connected to the chassis. The symbol does not necessarily mean that the part is actually connected to an *earth ground,* although it is sometimes used in this way in transmitter and receiver circuits, as will be shown later.

b. In studying the circuit of figure 19, it will be seen that there are three possible paths through which current may flow. The first is through resistor R1 and back through ground (or the chassis) to whichever power source is in use; the second is through capacitor C1 and resistor R2 and back through ground; the third is through inductor *L* and resistor R3 and back through ground. It will be assumed that inductor *L* has a large inductance, and that capacitor C1 has a large value of capacitance. Note that all three paths are connected in *parallel.*

c. The first step in the study of this circuit is to close switch S–1, applying *direct current* to the circuit. Current will flow through resistor R1, the first path; the amount of current which flows through

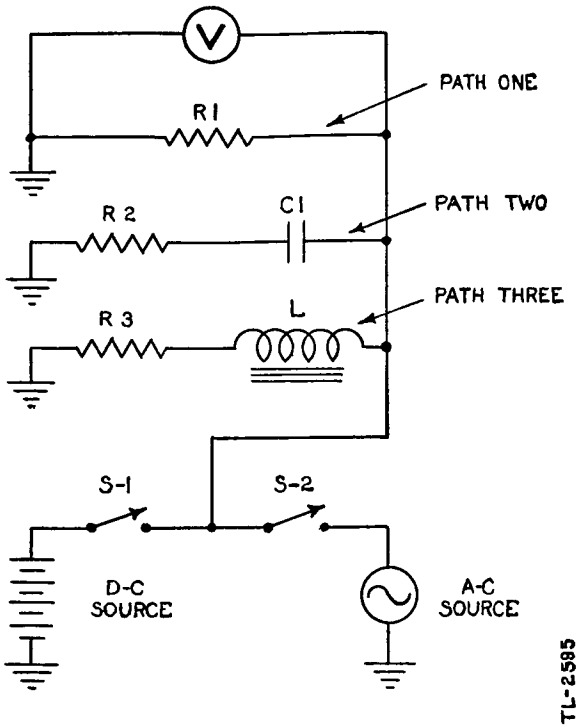

Figure 19. Operation of circuit elements.

this path will depend on its resistance. No current will flow in the second path since the *dielectric* of capacitor *C* acts as an *insulator,* and thus the capacitor will *not* pass direct current. Although no current is flowing in the second path, voltmeter *V,* which is connected across all three paths in parallel, indicates that there is a voltage present across R2 and C1. Also, if the voltmeter were placed across C1, the same value of voltage would be found across it, since there is no current flowing in this path, and consequently, there is no voltage drop across R2. This example shows that it is possible for a voltage to be present in a circuit, *even though the circuit is open* (that is, there is no flow of current). Current will flow in the third path, since the only opposition to current flow in this branch of the circuit is the d-c resistance of the coil windings of inductor *L* and the resistance of resistor R3. The amount of current flow will be determined by the total resistance in this path; that is, *the sum of the d-c resistance of L and the resistance of R3.*

d. The next step in the study of this circuit is to open switch S–1 and close switch S–2, applying alternating current to the circuit. When this is done, current will flow through resistor R1 in the first path. Since a resistor offers the same opposition to alternating current as to direct current, the current flowing in this path will be the same

regardless of whether alternating current or direct current is applied to the circuit. In the second path, through capacitor C1 (which has a large value of capacitance) and resistor R2, conditions will be similar to those in the first path. Due to its large capacitance, C1 will present a small reactance to the flow of current through this branch of the circuit. Thus, the impedance of this second path, or its *total opposition* to the flow of alternating current, being due to both the *small* reactance and the resistance, will be, for practical purposes, about equal to the resistance R2. In path three of the circuit, inductor *L* has such a large value of inductance, that it will present a high reactance to the flow of alternating current. The impedance of this path, which is due to both the large reactance and the resistance, will be so high that the current flow through R3 and *L* will be extremely small.

e. To sum up the effects of the circuit elements on both alternating current and direct current, both switches are closed to apply alternating current and direct current to the circuit at the same time. The important results then will be: In path one, both alternating current and direct current will flow; in path two, only alternating current will flow; in path three, a relatively large value of direct current will flow, but only a very small value of alternating current will flow. Thus it can be seen from this study that with both alternating current and direct current present in a circuit, the current flow of either may be permitted, stopped, or restricted, by the proper choice of circuit elements.

16. Audio-frequency Circuit Elements

a. The instruments and devices used to change sound waves into electrical (audio) frequencies, and vice versa, are important parts of the complete radio transmitter and receiver.

Figure 20. Carbon microphone T-17.

b. A *microphone* is a circuit element for converting sound (acoustical) energy into electrical (audio) energy. The various types of microphones are named in accordance with the methods used to produce this conversion, or change. Thus, there are carbon, condenser, dynamic, velocity, and crystal microphones. *Carbon microphones* use the variation of resistance between loosely packed carbon granules (due to acoustical or sound pressure in a diaphragm) to vary the electrical current at an audio-frequency rate. An Army microphone (Microphone T–17) is shown in figure 20. *Condenser microphones* operate on the principle of sound energy causing a variation in the spacing between two plates which act exactly like a capacitor; the resulting variation of capacitance (due to the movement in and out of the plates) causes a variation at audio frequencies. *Dynamic microphones* use a low-impedance coil mechanically coupled to a diaphragm; sound waves move the diaphragm and the coil, and the movement of the coil in a magnetic field causes currents in the coil at audio frequencies. The *velocity microphone* also operates on the electro-magnetic principle, but uses a ribbon of dural (a metal alloy) suspended between the poles of a powerful magnet. When the ribbon is vibrated by acoustical energy, it cuts the lines of force, and a current, which varies in accordance with the sound waves, is induced in the ribbon. One type of *crystal microphone* uses a Rochelle salt crystal fastened to a diaphragm. When sound waves move the diaphragm, the crystals vibrate and produce an alternating voltage between the crystal electrodes at the frequencies of the sound waves. All of the types mentioned (except the crystal microphone) require either some source of current, a magnetic field, or a polarizing voltage.

c. Headsets and loudspeakers are circuit elements for converting electrical (a-f) energy into sound (acoustical) energy. In general, the

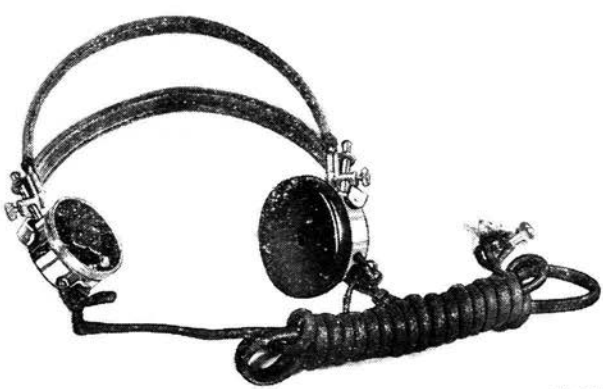

TL 2748 B

Figure 21. Headset.

Table V. Tabulation of common radio symbols.

Device	Symbol	Device	Symbol	Device	Symbol
Conductor or Wire		Cable, Shielded		Coil or Inductor, Tapped	
Crossed wires — top, connection; bottom, no connection		Resistor, Fixed		Coil or Inductor, Iron Core	
Ground		Resistor, Variable		Coil or Inductor, Powdered Iron Core	
Antenna		Capacitor, Fixed		Transformer, Powdered Iron Core	
Counterpoise		Capacitor, Fixed, Shielded		Transformer, Air Core	
Antenna, Loop		Capacitor, Variable		Transformer, Variable Coupling, moving coil shown	
Terminals		Capacitor, Variable, moving plates shown		Transformer, Iron Core	
Shielding		Capacitor, Variable, Shielded		Transformer, Air Core, Tuned	
Wire, Shielded		Capacitors, Variable, Ganged		Inductors, Link Coupled	
Wire, Twisted Pair		Capacitor, Dual Section		Key	
Cable, Coaxial		Coil or Inductor		Switch, Single Pole, Double Throw	
Wire in cable		Coil or Inductor, Variable		Switch, Rotary	

TL-6897-1

headset or the loudspeaker performs the opposite function of a microphone. When varying (a-f) currents flow through the windings on the permanent magnet of a headset, the diaphragm vibrates in accordance with these currents and thus produces audible sound waves proportional to the variations of current. A typical headset is shown in figure 21, with the circuit diagram symbol. One type of loudspeaker works on much the same principle as the headset; but instead of a metal diaphragm, the loudspeaker uses a paper cone, moved by a small armature, for setting up audible sound waves. Figure 22 shows a loudspeaker of this type removed from its cabinet.

Table V. Tabulation of common radio symbols—Continued.

Device	Symbol	Device	Symbol	Device	Symbol
Switch, Double Pole, Double Throw		Connector, Male (typical)		Envelope or Shell	
Selector Switch (typical)		Connector, Female (typical)		Envelope, Gas Filled	
Switch, Power		Dry Cell or Battery		Beam Tetrode Vacuum Tube	
Relay (typical contact arrangement)		Headset		Vacuum Tube, Voltage Regulator	
Jacks		Loud Speaker		Vacuum Tube, Triode, Octal Base	
Plug, Microphone, Headset or Speaker	TIP SLEEVE	Microphone		Vacuum Tube Triode, Octal Base	
Plug for power outlet		Cathode, Thermionic		Vibrator	
Power Receptacle or Outlet		Cathode, Cold Discharge		Crystal	
Connector, Polarized, Male	RADIAL PRONG INDICATES POLARIZATION	Filament		Oxide Rectifier	
Connector, Polarized, Female		Grid		Fuse	
Connector, Twistlock, Female		Plate or Anode		Lamp or Pilot Light	
Connector, Polarized, 2-Wire, Male		Beam Forming Electrodes		Voltmeter	

TL-6897-2

17. Insulators

In addition to the metal materials which conduct electricity very readily (such as copper and iron), it is often necessary to have other materials which offer a very high resistance to the flow of current, in order to prevent the electricity from "straying away" at points where physical support is essential. Such materials are known as *insulators.* While a perfect insulator does not exist, there are some materials, such as porcelain, glass, and ceramic materials, which effectively prevent any leakage. It is important to note that insulators which are satisfactory for power purposes may not be suitable for radio work. In radio circuits which operate with microwatts of energy, any minute

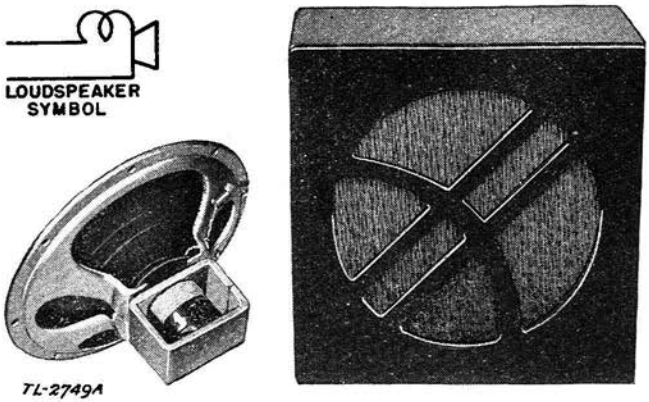

Figure 22. Permanent magnet loudspeaker and cabinet.

leakage of current is of definite concern. The dielectric bars which insulate the stator plates from the frame of a variable air capacitor must be kept clean to prevent any stray leakage. Any slight leakage currents on insulator surfaces, such as tube bases and sockets, are also important. In general, it is well to keep radio insulators away from strong electric fields, and to maintain all insulators dry and clean.

18. Symbols

a. It is not practical to show radio circuit diagrams in the form of photographs or drawings of the actual parts or components, since only the outer appearance of the parts would be shown, leaving the inner workings obscure. Therefore, in radio circuit diagrams (also known as schematic diagrams) special symbols are used to represent the various circuit elements and parts, in order to simplify the drawings. Symbols for the various types of resistors, inductors, and capacitors have already been introduced, and a complete list of all commonly used symbols is given in table V. The student should refer to this list whenever in doubt about the identification of any part of a circuit diagram.

b. The more common symbols explain themselves by their own appearance, but some may cause confusion. An arrow point, for example, may have varied meanings. At the end of a line which seems to be continuing out from the schematic diagram, the arrow point signifies that there is more of the circuit than is shown. Arrows along circuit lines may indicate the direction of the signal current through the apparatus. If the arrow point rests against a piece of equipment it probably means that there is a contact which is capable of movement or adjustment. Finally, an arrow drawn diagonally through any other symbol means that the device is adjustable smoothly and continuously, as, for example, a variable resistor or a variable inductor.

SECTION III

TUNED CIRCUITS

19. General

a. Tuned circuits are combinations of circuit elements so arranged that they produce a desired effect in the radio circuit. Both transmitters and receivers depend on tuned circuits for their operation on the desired frequency. And if it were not for tuned circuits operating in conjunction with vacuum tubes, modern radio would not be possible.

b. In radio receivers tuned circuits are necessary not only for the selection of desired signals, but also for the rejection of undesired signals. The ability of a receiver to select the desired frequency while rejecting the undesired frequencies is called *selectivity*. The selectivity of a receiving set is entirely dependent on the proper operation of its tuned circuits. If the tuned circuits are not functioning properly, if they are improperly tuned, or if any of the parts of which they are constructed are defective, then the sensitivity of the set (ability to receive weak signals) will either be considerably reduced or the receiver will not work at all.

c. In radio transmitters, not only are tuned circuits depended on for operation on the desired frequency, but the entire process of r-f power generation and amplification is dependent on the proper functioning of tuned circuits. If the tuned circuits of a radio transmitter are not operating properly due to a defective part or if they are incorrectly tuned, the power output of the transmitter (and consequently the transmission range) will either be considerably reduced or the transmitter will become entirely inoperative.

20. Curves and Graphs

In radio work, curves and graphs are widely used to show the operation of parts and circuits, because a single curve or graph will explain the operation of the part or circuit more simply than a long description in words. A curve or graph gives a picture of what is happening to one value in a circuit as another value is changed. Curves and graphs used in newspapers and magazines, showing business trends or changes in the population over a period of time, are all familiar. The curves and graphs used in radio work are constructed and read in

exactly the same manner. They can show the voltage in a circuit in relation to frequency, the reactance of a circuit element in relation to frequency, or the voltage in a circuit in relation to current. For example, in section II it was shown that the reactance of a capacitor decreases as the operating frequency is increased. This relationship can be shown

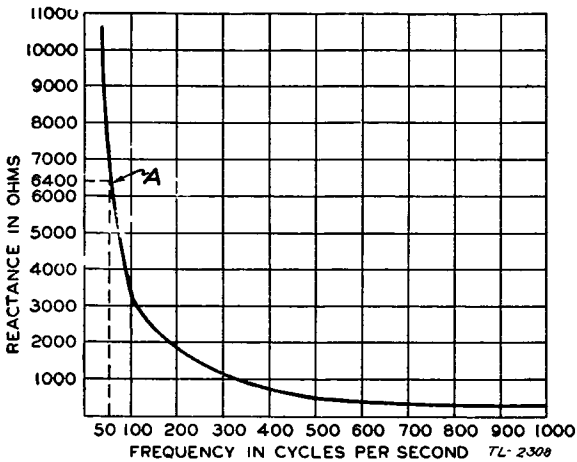

Figure 23. Graph showing reactance of 0.5 μf capacitor from 30 to 1,000 cycles per second.

on a graph, illustrated in figure 23. Each point on this graph shows the value of reactance of the capacitor for a different frequency. Point *A* shows that the reactance of the capacitor is approximately 6,400 ohms at a frequency of 50 cycles per second. Graphs will be extensively used in this section to indicate what happens in tuned circuits.

21. Resistance, Reactance, and Impedance

a. A resistor presents the same resistance to the flow of alternating current as it does to direct current. The opposition offered to the flow of alternating current by inductors and capacitors is called reactance. If a circut contains both resistance and reactance, the total opposition offered to the flow of alternating current is called the *impedance* of the circuit. The impedance of a circuit is the *combined effect cf resistance and reactance* in opposing the flow of alternating current. Impedance is measured in ohms.

b. The effect of inductive and capacitive reactance on current and voltage is of important concern in radio work. Inductive reactance, in addition to increasing as the frequency is increased, has another effect which plays an important part in tuned circuits: it not only opposes the flow of alternating current, but also causes it to lag a fraction of a cycle behind the applied voltage, as shown in figure 24. If a circuit contains only inductive reactance, the current will lag behind the

voltage by exactly one-quarter of a cycle, or 90°. Capacitive reactance has just the opposite effect: it causes the current to lead the voltage by

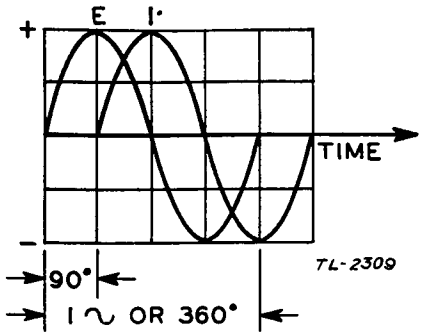

Figure 24. Effect of inductive reactance.

a fraction of a cycle, as shown in figure 25. If a circuit contains only capacitive reactance, the current will lead the voltage by 90°.

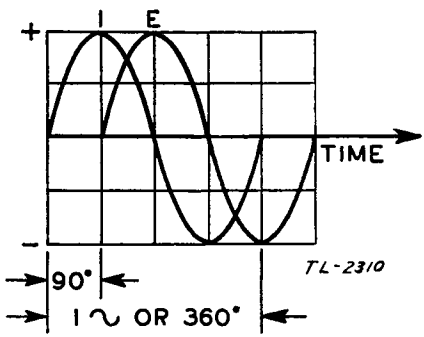

Figure 25. Effect of capacitive reactance.

c. Instead of referring to fractions of a cycle as one-half of a cycle, or one-quarter of a cycle, in radio work parts of a cycle are expressed in degrees: one full cycle equals 360°, one-half cycle equals 180°, or one-quarter cycle equals 90°, etc. If two voltages, or a voltage and a current, do not reach their maximum and minimum values at the same time in a circuit, the difference between the two is expressed in degrees. This effect is called the *phase shift,* or the phase difference. For example, if the current in a circuit either lags or leads the voltage by one-quarter of a cycle, or 90° it is said that the two are 90° out of phase, or that there is a phase shift of 90°. If the current and the voltage in a circuit reach their maximum and minimum values at exactly the same time, it is said that they are in phase.

d. Since inductive reactance causes the current to lag 90° behind the voltage, and capacitive reactance causes it to lead the voltage by 90°, it

can be seen that the difference in the two effects is 180° (or one-half of a cycle). Since one half of a cycle is positive and the other half is negative, a change of half of a cycle, or 180°, will represent a change in polarity. Therefore, the effect of inductive reactance can be considered as *positive reactance,* and capacitive reactance can be considered as *negative reactance.*

22. Reactance Calculations

a. Since inductive reactance is proportional to inductance and frequency, a simple formula can be used to determine the inductive reactance of a coil.

$$X_L = 2\pi f L$$

Where X_L = the amount of inductive reactance *in ohms,*
L = the inductance of a coil in *henrys,*
and f = the frequency in cycles per second.

2π is a mathematical constant used a great deal in radio work; it is equal to about 6.28.

Example: Find the reactance of a coil of 5 henrys at a frequency of 60 cycles per second.

$$X_1 = 6.28 \times 60 \times 5$$
$$= 1{,}884 \text{ ohms of inductive reactance.}$$

Example: Find the reactance of an inductance of 6 millihenrys at a frequency of 1,000,000 cycles per second.

$$X_L = 6.28 \times 1{,}000{,}000 \times 0.006$$
$$= 37{,}700 \text{ ohms of inductive reactance.}$$

It should be observed that inductances expressed in subdivisions of the henry must be converted into henrys before substituting in the formula for reactance.

b. Since the amount of energy stored in a capacitor (for a given voltage) is fixed by the actual capacity, the total amount of energy stored (and subsequently restored to the circuit) in 1 second will be greater when the capacitor is charged many times per second than when it is charged only a few times per second. Therefore, the current flow will be proportional to the frequency and to the capacitance of of the capacitor, and the reactance will be inversely proportional to the frequency and the capacitance. The formula for capacitive reactance is—

$$X_c = \frac{1}{2\pi f C}$$

where X_c = the amount of capacitive reactance in ohms,
C = the capacitance of a capacitor in farads,
f = the frequency in cycles per second,
and 2π = about 6.28.

Example: Find the reactance of a 2-microfarad capacitor at 60 cycles per second.

$$X_c = \frac{1}{6.28 \times 60 \times 0.000002}$$
$$= 1{,}330 \text{ ohms of capacitive reactance}$$

It should be observed that capacitance in the above formula must be represented in farads.

23. Series Resonance

a. If a coil and a capacitor are connected in series with a variable-frequency source of alternating current (fig. 26), the combination of parts is called a *series-tuned circuit,* or a *series-resonant circuit.* Since the windings of the coil in such a circuit will produce a certain amount of resistance, the effect of this resistance must be considered in the operation of the circuit. This resistance is indicated in figure 26 as a resistor R. If the a-c source is set at a low frequency, it is found that the greatest opposition to the flow of current in the circuit is the reactance of capacitor C (since capacitive reactance increases as the frequency is decreased). If the a-c source is set at a high frequency, it is found that the greatest opposition to the flow of current is the reactance of inductor L (since inductive reactance increases as the frequency is increased). In other words, at low frequencies the reactance of the circuit is mainly *capacitive,* while at high frequencies the reactance is mainly *inductive.*

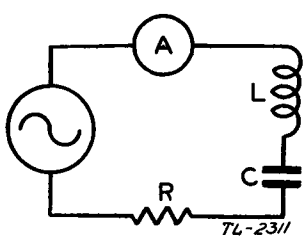

Figure 26. Series-resonant circuit.

b. At some frequency between the high and low extremes, the inductive reactance will be equal to the capacitive reactance. This frequency is known as the *resonant frequency* of the circuit, and it is said that the series circuit is tuned to this frequency. Since the inductive reactance in the circuit produces a positive effect, and the capacitive

reactance produces a negative effect, when they become equal in amount at the resonant frequency, they cancel each other, so that the only opposition to current flow in the circuit is that offered by the resistor *R*.

c. The current flowing in the series circuit of figure 26 can be measured by means of meter A1. If the source frequency is increased

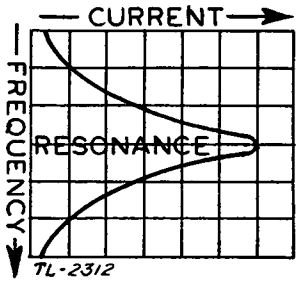

Figure 27. Current flow in series-resonant circuit.

gradually from a low to a high value, the current will rapidly increase until it reaches a maximum value at the resonant frequency, and then rapidly decrease, as shown by the graph in figure 27.

d. Since the current flow in a circuit is determined by the impedance of the circuit, the impedance of a series-tuned circuit is at its lowest,

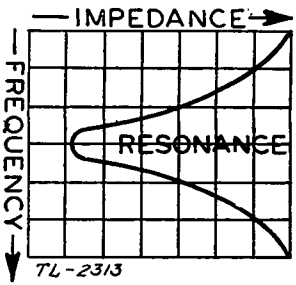

Figure 28. Impedance curve of series-tuned circuit.

or minimum value at the resonant frequency, and becomes greater on either side of the resonant frequency. (See fig. 28.)

e. Since the voltage drop across each element of a circuit will be proportional to the current flowing in the circuit and to the opposition offered by each element to the current flow, and since the current flowing in a series circuit is maximum at the resonant frequency, the voltage appearing across each of the elements in the circuit will also be greatest at resonance. Although the voltages across the coil and capacitor of the series circuit in figure 26 are equal in amount and opposite in polarity at the resonant frequency (and so cancel each other as far as the total circuit voltage is concerned), each of these voltages is very high. Either one of them can be used to operate other

radio circuits (such as vacuum tube circuits), since a very strong signal (amplification) can be obtained at the resonant frequency. This voltage amplification of radio signals at the particular frequency to which the circuit is resonant is one of the most important effects of tuned circuits.

f. A circuit is at resonance when the inductive reactance is of the same value as the capacitive reactance. If the value of either the coil or the capacitor is changed, the resonant frequency of the circuit is changed. If either the capacitance or the inductance is increased, or both of them are increased at the same time, the resonant frequency of the circuit is decreased. Conversely, if either the capacitance or inductance is decreased, or both of them are decreased at the same time, the resonant frequency is increased. Thus, by making either the inductor or capacitor in the circuit variable, the circuit can be tuned (or resonated) over a wide range of frequencies. The limits of the frequency range over which the circuit can be tuned will depend on the value of the fixed element, and the maximum and minimum values of the variable element. It is usually more convenient and more efficient to make the *capacitor* the variable element in a tuned circuit. For this reason variable capacitors, together with fixed inductance coils, make up the tuned circuits of practically all modern radio transmitters and receivers.

g. The resistance present in a resonant-tuned circuit determines the amount of selectivity of which the circuit is capable. Resonance curves for three different values of resistance (*R* in fig. 26) are shown in figure 29. These are the same type of curve as that shown in figure 27, where current is plotted against frequency at resonance. The resonance curves of figure 29 demonstrate the practicability of a tuned circuit as a selective device. The current flowing in a tuned circuit, when equal voltages of many different frequencies are applied to its terminals, is composed principally of frequencies equal to, or nearly equal to, the resonant frequency of the circuit. As resistance is added to the

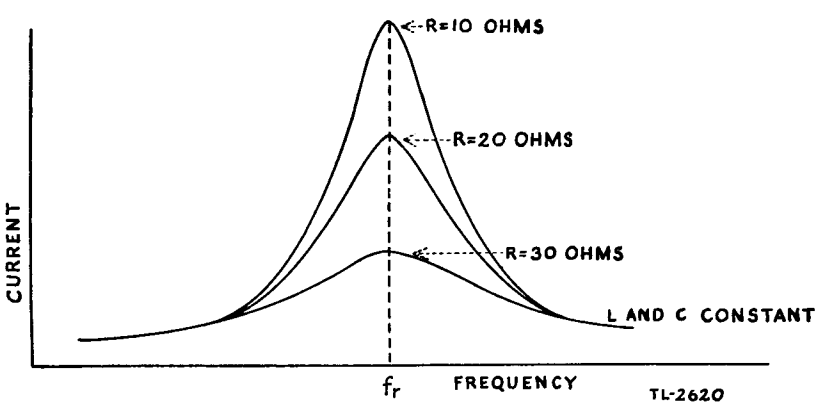

Figure 29. Resonance curves showing broadening effect of series resistance.

circuit, the current is attenuated in such a manner that a more nearly uniform but reduced resonance curve (or response) is obtained. Thus, resistance in the circuit acts to reduce the selectivity. It may also be shown that the effect of shunt resistance across either the inductor or the capacitor will likewise reduce the selectivity. Occasionally resistance is deliberately introduced into a radio circuit for the purpose of broadening the range of frequencies to which the circuit responds, although generally the inherent resistance of the circuit is more than enough for this purpose.

h. Series-tuned circuits are often used in the antenna systems of transmitters and receivers. They are particularly well suited to the antenna circuit requirements of transmitters, since maximum current flows in them at the resonant frequency. This means that maximum current will flow in the antenna at the desired operating frequency, and consequently there will be a maximum radiation of power at this frequency. Series-tuned circuits are also used as *wave traps,* or *filters* (see par. 26).

24. Parallel Resonance

a. If a coil and a capacitor are connected in parallel (fig. 30), the combination of parts is called a *parallel-tuned circuit,* or a *parallel-resonant circuit.* As in the series-tuned circuit of figure 26, whatever resistance may be present in the circuit because of the circuit elements is indicated on the diagram by the resistor *R.* Since the coil and capacitor of the parallel-tuned circuit are both connected across the line from the variable-frequency source of alternating current, there are two paths through which the current may flow: one path through the coil, and one path through the capacitor. If the a-c source is

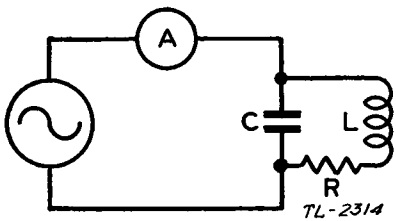

Figure 30. Parallel-resonant circuit.

set at a low frequency, most of the current will flow through the coil, since the reactance of the coil will be small for low-frequency alternating current, and the reactance of the capacitor will be high. If the a-c source is set at a high frequency, most of the current will flow through the capacitor, since its reactance will be small for high frequencies, while the reactance of the coil will be high.

b. At the resonant frequency, just as in the case of the series-tuned circuit, the reactance of capacitor C will be equal to the reactance of inductor L. However, unlike the series circuit, since the two circuit elements are in parallel, the current flowing through the inductive reactance (coil L) will be opposite in polarity to the current flowing through the capacitive reactance (capacitor C). Since the inductive reactance is equal to the capacitive reactance at the resonant frequency, the currents flowing through the two reactances will be equal in value as well as opposite in polarity, and consequently they will cancel each other.

c. The current flowing in the parallel circuit of figure 30 can be measured by the meter A. If the source frequency is varied from a low frequency through the resonant frequency to a high frequency,

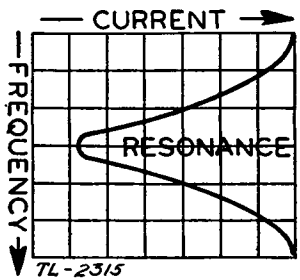

Figure 31. Current flow in parallel-resonant circuit.

the current will rapidly decrease from its highest value at the low frequency to a minimum at the resonant frequency, and will then rise again to a high value at the high frequency, as shown by the graph of figure 31.

d. The line current is the difference between the currents flowing through the inductive and capacitive branches of the circuit, as

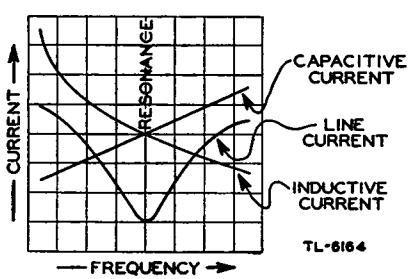

Figure 32. Flow of currents through branches of parallel-resonant circuit.

shown by the graph of figure 32. Because of the presence of some resistance, the two branch currents can never cancel each other completely. The lower the resistance, the lower is the line current. Although

the line current may be very small, the current circulating between the coil and the capacitor may be very large.

e. Since the total current, or line current, in a parallel-resonant circuit is minimum at the resonant frequency, the impedance of the circuit (or the total opposition to current flow) must be at a maximum at resonance and decrease on either side of the resonant frequency, as shown by the graph in figure 33.

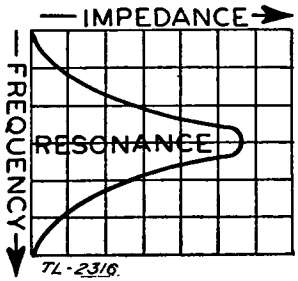

Figure 33. Impedance curve of parallel-resonant circuit.

f. The selectivity of a parallel-tuned circuit is inversely related to the resistance in either branch of the circuit; that is, increased resistance in either branch of the parallel circuit acts to decrease the selectivity.

g. For a fixed frequency of the a-c generator in a circuit such as is shown in figure 30, a variation of the capacitor C is accompanied by a variation of the ammeter (line current) reading as the impedance of the circuit changes. Minimum current in the line indicates that there is a maximum circulating current within the parallel-tuned circuit. A parallel-resonant circuit in a radio transmitter is tuned in this manner, by watching for a dip in the ammeter reading.

h. The impedance of parallel-tuned circuits is very high at the resonant frequency and low at all other frequencies. For this reason, they are used with vacuum tubes to generate, detect, or amplify signals of a given frequency. Vacuum tubes are comparatively high-impedance devices, and for proper operation must be connected to high-impedance circuits, such as parallel-tuned circuits. Parallel-resonant circuits are also used as filters (par. 26). A third important use of the parallel-tuned circuit is in the principle of the tank circuit employed in radio transmitters.

25. Tank Circuit Principle

a. If the capacitor in a parallel-tuned circuit is charged by means of a battery (direct current) and the battery is then disconnected, an alternating current of very short duration will be generated at the resonant frequency of the circuit.

b. This current is produced in the following manner:

(1) The capacitor will discharge into the inductor, causing current to flow through it. This current flow builds up a magnetic field around the inductor.

(2) As the capacitor becomes discharged, the current flow stops and the field collapses.

(3) A voltage, of such polarity that it causes the current to continue to flow in the same direction, is induced in the coil by the collapse of the field.

(4) This current flowing into the capacitor charges it with a voltage of opposite polarity to the original charge from the battery. The capacitor now discharges in the opposite direction through the inductor, and the process is repeated.

(5) To summarize, then, the energy in the circuit which originally came from the battery is first stored in the capacitor as a charge and then is transferred to the magnetic field around the inductor by the current flowing in the circuit. This current is alternating, since it reverses its direction at the resonant frequency of the tuned circuit.

c. This process would repeat itself indefinitely if the circuit contained *no* resistance. But since all circuits contain at least some resistance, the process will continue only until the energy which has been applied to the circuit has been dissipated, or used up, by the circuit resistance.

d. In order to produce a sustained alternating current, it is only necessary to supply sufficient power to such a parallel-tuned circuit to overcome the losses due to its resistance. It is possible to do this in certain vacuum tube circuits used in transmitters as will be explained later. Alternating currents generated in such parallel-tuned tank circuits are called *oscillatory currents.* It is because such a parallel-tuned circuit can store power for a time that it is called a *tank circuit.*

26. Filters

a. Filters are necessary for selecting energy at certain desired frequencies and for rejecting energy at undesired frequencies. Individual capacitors and inductors have properties in a circuit which make them suitable either singly or in combination with each other, for use as wide-frequency-range filters; low-pass filters and high-pass filters are two examples of this type. Resonant-tuned circuits are also employed as filters for the passage or rejection of specific frequencies; band-pass filters and band-rejection filters are examples of this type.

b. Individual capacitors and inductors have a characteristic frequency range discrimination. Inductors tend to pass low a-c frequencies and retard high frequencies; capacitors tend to pass high a-c frequencies and retard low frequencies. This retarding effect is know as *attenuation.* Figure 34 presents a pictorial concept of currents which flow in series

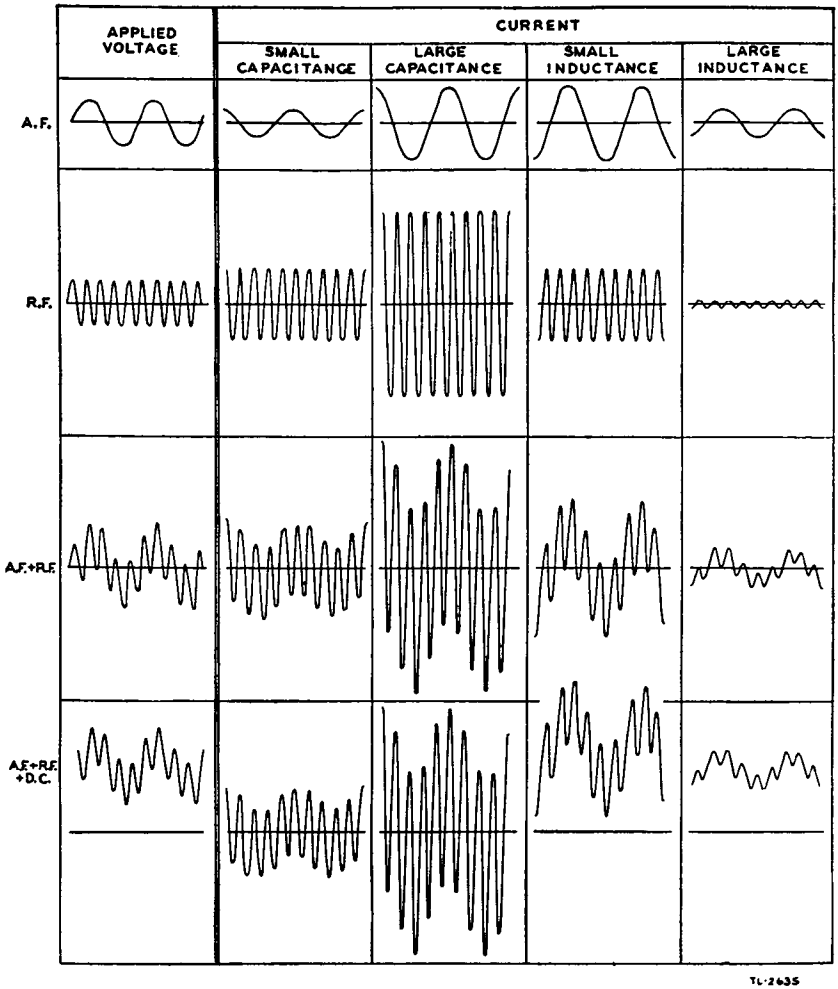

Figure 34. Filter action of individual series capacitors and inductors.

circuits corresponding to various applied potentials. The characteristic frequency discrimination of large and small capacitors and of large and small inductors is shown for four different types of input signals: a-f, r-f, a-f and r-f, and a-f and r-f with d-c component. The attenuation of certain of these input frequencies should be noted. Resistances do not provide any filtering action in themselves, for they impede all currents which pass through them, regardless of frequency. The less the resistance in a filter circuit, however, the sharper will be the dividing line between the frequencies which pass and those which are blocked or attenuated.

c. A *low-pass filter* is designed to pass all frequencies below a predetermined critical frequency, or cut-off frequency, and substantially

reduce, or attenuate, currents of all frequencies above this cut-off frequency. Such a filter is shown in figure 35 with a graph of a typical cut-off characteristic. The low-pass filter will also pass direct

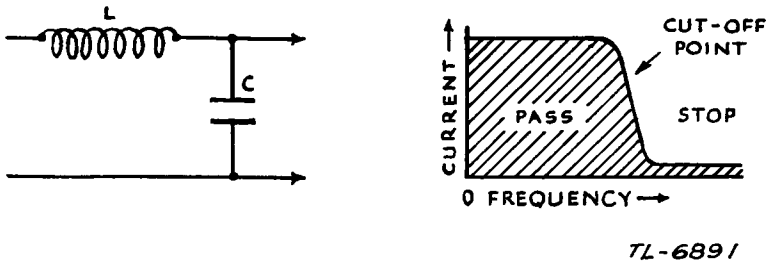

Figure 35. Low-pass filter and its frequency-current characteristic.

current and extremely low alternating current without opposition, and is therefore widely used to filter, or smooth, the output of radio power supplies. This smoothing action is explained more fully in paragraph 35*c*.

d. A *high-pass filter* is designed to pass currents of all frequencies above the predetermined cut-off frequency, and retard, or attenuate, the currents of all frequencies below this cut-off frequency. The

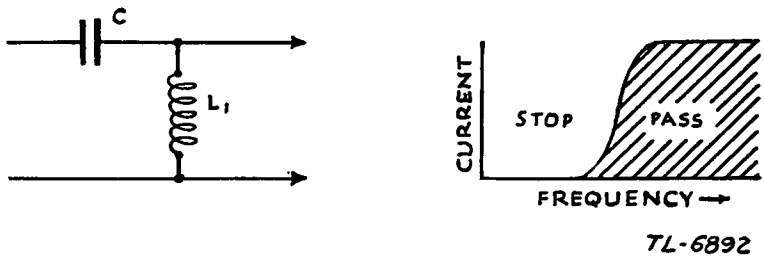

Figure 36. High-pass filter and its frequency-current characteristic.

inductor and capacitor of the low-pass filter have merely been interchanged to make the high-pass filter (fig. 36). Since all frequencies below the cut-off frequency are greatly attenuated a filter of this type will stop the flow of direct current in most cases.

e. Resonant (tuned) circuits have certain characteristics which make them ideal for a certain type of filter, where high selectivity is desired. A series-resonant circuit offers a low impedance to currents of the particular frequency to which it is tuned, and a relatively high impedance to currents of all other frequencies. A parallel-resonant circuit, on the other hand, offers a very high impedance to currents of its natural, or resonant, frequency, and a relatively low impedance to others.

f. A *band-pass filter* is designed to pass currents of frequencies within a continuous band, limited by an upper and lower cut-off

frequency, and substantially to reduce, or attenuate, all frequencies above and below that band. A typical band-pass filter is shown in figure 37, with a graph illustrating the band of frequencies which it will pass. The series- and parallel-resonant circuits are all tuned to the frequency band desired. The parallel-tuned circuits offer a high impedance to the frequencies within this band, while the series-tuned circuit offers very little impedance. Thus, these desired frequencies

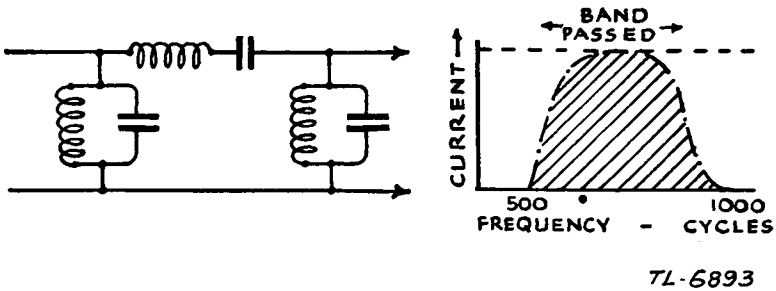

Figure 37. Band-pass filter and its frequency-current characteristic.

within the band will travel on to the rest of the circuit without being affected; but the currents of unwanted frequencies, that is, frequencies outside the band, will meet with a high impedance and be stopped. Band-pass filters are used in the tuned circuits of tuned r-f receivers. They are also used in certain sections of a superheterodyne radio receiver.

g. A *band-elimination filter,* or *band-rejection filter,* is designed to suppress currents of all frequencies within a continuous band, limited by an upper and lower cut-off frequency and to pass all frequencies above and below that band. Such a band-rejection filter is shown in figure 38, with a graph of its frequency characteristic. This type of filter is just the opposite of the band-pass filter, currents of frequencies

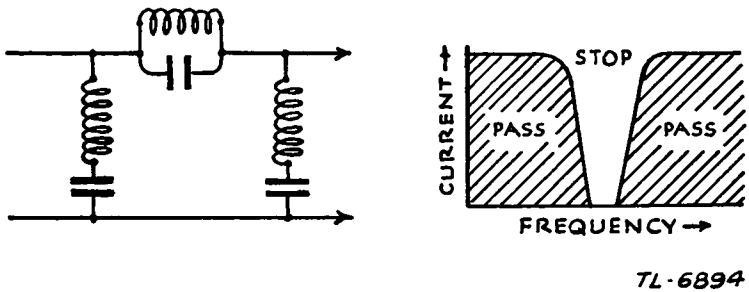

Figure 38. Band-rejection filter and its frequency-current characteristic.

within the band are opposed, or stopped. The two series-tuned circuits and the parallel-resonant circuit are all tuned to the frequency band desired. The parallel-tuned circuit offers a high impedance to this band of frequencies only, and the series-tuned circuits offer very little imped-

ance; therefore, the signals within the frequency band are stopped. All other frequencies, that is, all frequencies outside the band, pass through the parallel circuit which offers little impedance.

h. A *wave trap,* sometimes used in the antenna circuits of radio receivers, is a form of band-elimination filter. There are two types of these wave traps: the parallel-tuned filter and the series-tuned

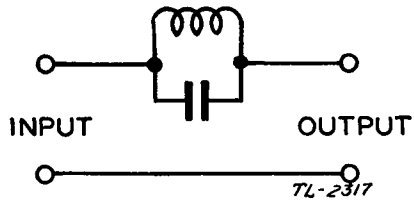

Figure 39. Parallel-tuned wave trap.

filter. A parallel-resonant circuit, connected as shown in figure 39, is tuned to resonance at the frequency of the undesired signal; the wave trap then presents a high impedance to currents of this unwanted frequency, and allows currents of all other frequencies to enter the receiver. A series-resonant circuit, connected as shown in figure 40,

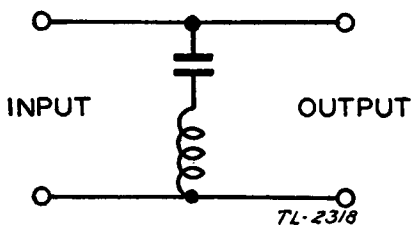

Figure 40. Series-tuned wave trap.

can be tuned to resonance at the frequency of the undesired signal, and these unwanted currents will be effectively bypassed, generally to ground, without affecting currents of all other frequencies.

27. Coupled Circuits: Transformer

a. Since every radio receiver and transmitter is composed of a number of circuits, or stages, methods must be devised for connecting, or coupling the output of each stage to the input of the next circuit. One of the most widely used methods for transferring power from one stage to another is the *transformer.* Two important properties of the transformer are *the turns and voltage ratio* and *the turns and impedance ratio.* (See TM 1–455.)

b. The voltage ratio of a transformer is proportional to its turns ratio. In other words, if a transformer has twice as many turns of wire on its secondary as on its primary side, the secondary voltage will be twice the primary voltage. Conversely, if a transformer has

only half as many turns on its secondary winding as on its primary winding, the secondary voltage will be half the primary voltage. Thus, by using a transformer, it is possible either to step up or step down the a-c voltage appearing in a circuit. This property is widely used in radio circuits where it is necessary to step up the signal voltage from one stage to the next. By using a step-up transformer it is possible to obtain an actual voltage gain, or voltage amplification.

c. The impedance ratio of a transformer is equal to the square of the turns ratio. Thus if a transformer has a turns ratio of 3 to 1 (or three times as many turns on one winding as on the other), its impedance ratio will be 9 to 1, and the winding having three times as many turns will have nine times the impedance of the other winding. By choosing a transformer with the proper turns ratio, it is therefore possible to match the impedances of two circuits. Among the requirements placed on any system for transferring power from one circuit to another, impedance matching is one of the most important, since it is an electrical rule that *in order to transfer the maximum power from one circuit to another, the impedances of the two circuits must be equal.*

d. For a practical example of impedance matching with a transformer, assume that a loudspeaker with an input impedance of 500 ohms is to be connected to an a-f amplifier stage with an output impedance of 8,000 ohms. In order to transfer the maximum a-f power from the a-f amplifier to the loudspeaker, the output impedance of the amplifier must match the input impedance of the speaker. By applying the impedance-turns ratio rule, the impedance ratio of the amplifier to the speaker will be:

$$\frac{8{,}000}{500}=\frac{16}{1}.$$

e. Since the impedance ratio of a transformer equals the square of the turns ratio, *the turns ratio equals the square root of the impedance ratio.* In the above problem, the impedance ratio is 16 to 1, and since the square root of 16 equals 4, the transformer must have a turns ratio of 4 to 1 in order to match the amplifier to the speaker.

28. Coupled Circuits: r-f Transformers

a. The properties of the transformer just discussed hold true for all types including r-f transformers, provided that all of the magnetic lines of force which cut the primary coil also cut the secondary. However, r-f transformers serve two purposes at the same time: they are used to couple the output of one stage to that of another stage, and, together with variable capacitors, they form the tuned circuits of radio sets. If an r-f transformer has *one* of its windings tuned by a variable capacitor in a circuit, it is called a *single-tuned transformer;* if *both*

of the windings are tuned by capacitators, it is known as a *double-tuned transformer.*

b. Single-tuned transformers are used in the majority of r-f amplifier circuits in radio receivers. Such transformers usually have untuned primary coils and tuned secondaries. The number of turns on the secondary will depend on the frequency range to be covered by the tuned circuit; but the number of turns on the primary will depend on the desired voltage step-up in the transformer, and the output impedance of the circuit in which it is to be connected. The transference of energy from the primary to the secondary of a transformer is due to the field of one coil passing through the windings of the other. In the untuned transformer, the power transferred from one winding to

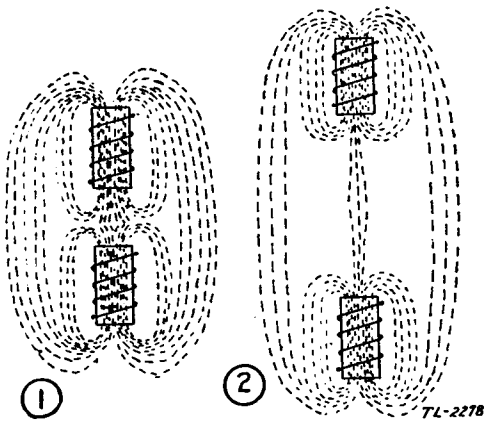

Figure 41. Coupled coils.

the other will depend on how close one coil is placed to the other, and consequently how many lines of force of the field of one coil pass through the windings of the other. (See fig. 41.) If the two coils are placed close together, they are closely coupled; if the coils are placed some distance apart, they are loosely coupled. From this discussion it would seem desirable to couple the windings of an r-f transformer as closely as possible, in order to obtain the greatest possible power transfer. However, in the case of the tuned transformer, there is greater concern about the selectivity of the tuned circuit (formed by the tuned secondary winding of the transformer) than there is about the maximum power transfer. In other words, a reasonable power transfer is wanted at the resonant frequency, and minimum power transfer at all other frequencies. If the coils of the single-tuned r-f transformer are coupled too closely, the power transfer over all frequencies may be at a maximum, but the ratio between the power transferred at the desired frequency and the power transferred at the undesired frequencies will be low, and consequently the selectivity will

be poor. On the other hand, if the coils are coupled too loosely, the power transfer even at the resonant frequency will be unsatisfactory, although the resulting selectivity may be excellent. Between these two extremes there is a certain degree of coupling which will give both satisfactory selectivity and good power transfer at the resonant fre-

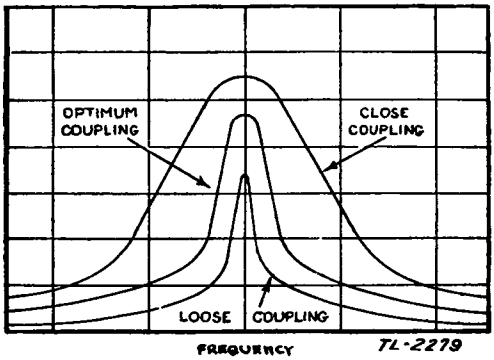

Figure 42. Selectivity curves of a typical single-tuned r-f transformer, showing variations in transfer of power with changes of frequency.

quency. This degree of coupling is known as *optimum coupling.* Figure 42 shows the selectivity curves of a typical single-tuned r-f transformer for three different degrees of coupling between its primary and secondary coils.

c. Double-tuned transformers have both primary and secondary windings tuned by capacitors, and are widely used in the intermediate-frequency amplifier stages of superheterodyne receivers. The double-tuned transformers used in such circuits are called i-f transformers (fig. 15④), and must be carefully tuned to allow the passage of a very narrow band of radio frequency known as the *intermediate frequency* of superheterodyne receiver. The effect of the degree of coupling on

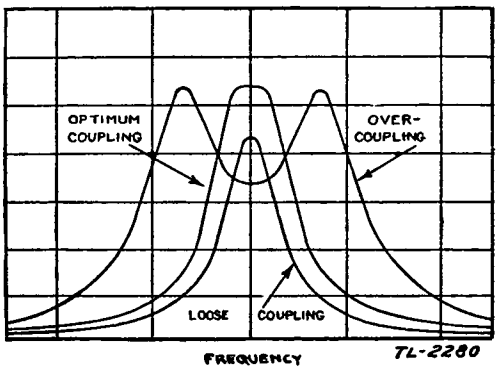

Figure 43. Selectivity curves of a typical double-tuned r-f transformer, showing variations in transfer of power with changes in frequency.

the selectivity of double-tuned transformers is more pronounced than in the case of the single-tuned transformer, since two circuits, both tuned to the same frequency, are coupled together. The double-tuned transformer has greater selectivity than the single-tuned r-f transformer. The selectivity curve will be more sharply peaked and will have steeper sides, indicating better rejection of signals on either side of the resonant frequency. Figure 43 shows the selectivity curves of a double-tuned transformer for three different degrees of coupling. Compare these curves with those for the single-tuned transformer shown in figure 42; note the flat top on the curve for optimum coupling, indicating that a band of frequencies on either side of the resonant frequency will be passed by a double-tuned transformer with the proper degree of coupling. This band-pass effect is very important in the reception of radiotelephone signals, as will be seen later. Since double-tuned transformers will pass a narrow band of frequencies while rejecting all other frequencies, they are sometimes called *band-pass filters.* Note the double hump on the curve for overcoupling, indicating that a double-tuned transformer will have two resonant frequencies equidistant from the proper resonant frequency if the coupling is increased past the optimum point.

d. The importance of maintaining the proper coupling between the coils of an r-f transformer cannot be overstressed. Overcoupling will reduce the selectivity of a set; loose coupling will reduce the sensitivity of the set.

29. Coupled Circuits: Resistance Coupling

a. Resistors are often used to couple the output of one circuit to the input of another, particularly in a-f amplifiers. Resistance coupling may be used to step down the voltage from one stage to another. (See

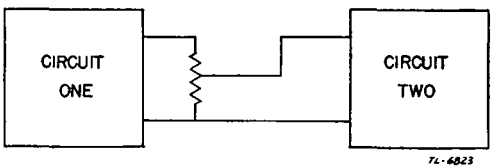

Figure 44. Resistance coupling used to step down voltage.

fig. 44.) In this arrangement, if the tap on the resistor is placed halfway between the ends of the resistor, the voltage applied to circuit two will be half the output voltage of circuit one. Other step-down voltage ratios may be obtained by moving the tap up or down the resistor.

b. To resistance-couple two stages, and pass only alternating current from one to the other, as is the case in most radio circuits, a blocking capacitor is used (fig. 45). This form of resistance coupling, sometimes

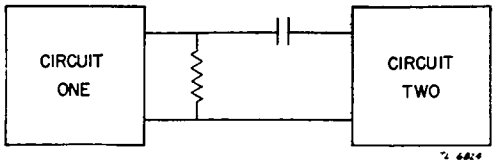

Figure 45. Resistance coupling with blocking capacitor.

known as *resistance-capacitance coupling,* has a wide use in the a-f amplifiers of radio receivers.

30. Coupled Circuits: Inductance Coupling

a. Inductance coupling is used mainly to couple the r-f amplifier circuits of radio transmitters, although it finds some application in the a-f circuits of receivers. Inductance coupling may be used to step down the voltage from one circuit to another in exactly the same way that resistance coupling is used in figure 44, except that a tapped inductor is substituted for the resistor shown. The step-down voltage ratio will be equal to *the turns ratio of the total winding to the tapped portion.* That is, if the section of the winding applied to circuit two has only one-third of the turns of the total winding, the voltage appearing across this portion of the winding will be one-third of the voltage across the whole coil.

b. In like manner, inductance coupling may be used to step up the voltage from one circuit to another (fig. 46). The step-up voltage ratio also will be equal to the turns ratio of the total winding to the tapped

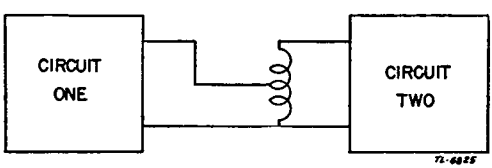

Figure 46. Inductance coupling used to step up voltage.

portion. Thus, if circuit one is connected across one-third of the turns of the coil, the voltage appearing in circuit two will be three times as great as the voltage output of circuit one. Since the tapped inductor operates in much the same fashion as does the transformer, the tapped inductor is often called an *autotransformer.*

c. Impedance matching can be accomplished with tapped inductors, in much the same way as with transformers. The rule is as follows: The impedance *ratio* of the whole coil to the tapped section equals *the square of the turns ration of the whole coil to the tapped section.*

d. In inductance coupling, as in resistance coupling, to prevent the flow of direct current from one circuit to the other, while allowing

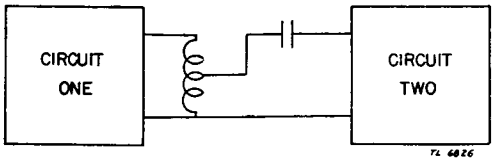

Figure 47. Impedance-capacitance coupling used to step down voltage.

the a-c signal to pass, a *blocking capacitor* is employed. This method of coupling is shown in figure 47, and is often called *impedance-capacitance coupling.*

31. Distributed Inductance and Capacitance

a. In addition to the inductance and capacitance included in inductors and capacitors, there are distributed, or stray, inductance and capacitance effects present in miscellaneous components of radio instruments, as in connecting wires, switches, and sockets. These become of considerable concern at radio frequencies.

b. Capacitive reactance is inversely proportional to the frequency $\left(X_c = \frac{1}{2\pi f C}\right)$. This means that as the frequency of an applied voltage is increased, the capacitance of the circuit offers less opposition to the flow of current. At high frequencies undesirably large currents may appear where negligible currents would flow at low frequencies. The capacitance which occurs between elements of a vacuum tube and between adjacent turns of a coil present a large capacitive reactance at the lower frequencies. However, at radio frequencies, the reactance may be reduced to such a point that the increased magnitude of the current flowing across it determines the upper frequency limit for the usefulness of the associated circuit.

c. Inductive reactance increases in direct proportion to frequency $(X_L = 2\pi f L)$, or, as the frequency of an applied voltage is increased, the inductance of the circuit offers more opposition to the flow of current. A simple connecting wire, the inductive reactance of which may be insignificant at low frequencies, may have a sufficiently large inductive reactance at higher frequencies to render an instrument inoperative.

32. Effective a-c Resistance

Fundamentally, a measure of the resistance of a circuit is given by the power dissipated as heat, when unit current is flowing in the circuit. In its broadest sense, the term "resistance" is taken to mean all effects

leading to dissipation of energy in such form that the energy is not recoverable for any useful purpose within the immediate system. Thus a radio antenna for transmitting is said to have a radiation resistance associated with radiative losses, that is, with the energy which is radiated into space; and a particular transmitter or receiver circuit may be said to exhibit certain reflected resistance because of the power consumed by other circuits which it directly or indirectly supplies. With alternating current, for a given current magnitude, considerably more electrical power may be consumed than is required by the same circuit with direct current. The resistance which is indicated by a-c power consumption is called *effective a-c resistance.* Part of this additional power is required to maintain the heat losses accompanying parasitic circulating currents (eddy currents) which are induced in conductors of the circuit (in particular, in transformer cores) by the varying magnetic field. Another source of a-c electrical power dissipation is represented by dielectric and other losses. A further factor which makes for more required power for a given magnitude of alternating current is the skin effect: the tendency of alternating currents to travel with greater density near the surface of the conductor than at the center. This tendency increases with frequency. The magnetic field about a current-carrying conductor is more intense at the center of the conductor than it is near the surface of the conductor. Thus the back voltage set up by the rising and falling magnetic field is greater at the center than near the surface, and practically all of the current through a wire at high frequencies is confined to the outer surface of the conductor. The result is increased heating for the same current, that is, higher resistance. The nonuniform distribution of current throughout the cross section of a conductor at high frequencies is more pronounced if the conductor is wound into the form of a coil than it is if it is used as a straight wire. At radio frequencies, the effective a-c resistance of a coil may be 10 or 100 times its true d-c resistance. Wherever alternating currents are studied, it is generally understood, if not specifically stated, that resistance means *effective a-c resistance.*

SECTION IV

VACUUM TUBES

33. Electron

a. The whole foundation of electricity is based upon the *electron,* a minute negatively charged particle. Atoms, of which all matter is composed, consist of a positively charged nucleus around which are grouped a number of electrons. The physical properties of any material depend upon the number of electrons and the size of the nucleus. In all matter there are a certain number of free electrons. The movement of these free electrons is known as a current of electricity. If the movement of electrons is in one direction only, the current is direct. If, however, the source of voltage is alternated between positive and negative, the flow of electrons will likewise alternate; this is known as alternating current.

b. If certain metals, or metallic substances such as metallic *oxides,* are heated to a high temperature either by means of a flame or by passing current through them, they have the property of throwing off, or emitting, electrons. The element in a vacuum tube which is heated to emit electrons is called the *cathode.*

c. If the cathode is heated to a high temperature in the open air, it will burn up because of the presence of oxygen in the air. For this reason the cathode is placed in a glass or metal bulb from which all air has been removed. Such a space is known as a *vacuum.* Since it is difficult to heat an element in a vacuum tube by means of fire or flame, the cathode, which is in the form of a filament, is directly heated by passing a current through it.

d. Any isolated *positively charged* body in the vicinity of the electron emitter will attract the *negatively charged* electrons. The positive charge on the body will soon be canceled by the electrons attracted to it unless some means is employed to remove the electrons as fast as they arrive. This can be done by connecting a source of constant voltage between the positively charged body and the electron emitter (fig. 48). This is the general arrangement in a two-element tube, or *diode.* It is also the basis of operation of all types of vacuum tubes.

e. The emitter, or cathode, of a vacuum tube may resemble the familiar incandescent lamp filament which is heated by passing a current through it. The positively charged body usually surrounds the

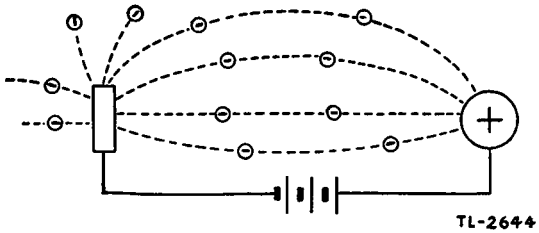

Figure 48. Emitted electrons attracted by a positively charged body.

emitter and is called the *plate,* or *anode.* It should be noted that electrons travel from negative to positive.

f. Two types of cathodes, or emitters, are used in radio tubes. In one, known as the *filament* or *directly heated* type, the heating current is passed through the cathode itself. In the other, known as the *indirectly heated* type, the current is passed through a heating element, which in turn heats the cathode to a temperature sufficiently high for electron emission. In the indirectly heated type, the cathode is an oxide-coated metal sleeve which is placed over the heater element.

g. The higher the temperature of the cathode, the more electrons it will emit. However, if too much voltage is applied to a cathode, the heavy current flow will cause the filament or heater to burn out. The safe filament or heater voltage is determined by the manufacturer, and this voltage rating must be observed for satisfactory operation. The cathode of a tube will not continue to emit electrons indefinitely. After several thousand hours of operation, the number of electrons emitted will gradually decrease, until finally an insufficient number is emitted for proper operation. The decrease in emission capacity is due to the chemical change which takes place in the cathode. This is one of the reasons why tubes wear out.

34. Operation of Diode

a. The *diode* is the simplest type of vacuum tube, and consists of only two elements: a cathode and a plate. The operation of the diode depends on the fact that if a positive voltage is applied to the plate with respect to the heated cathode, *current will flow through the tube;* if a negative voltage is applied to the plate with respect to the cathode, *current will not flow through the tube.*

b. When the positive terminal of a battery is connected to the plate of a diode and the negative terminal is connected to the cathode, the plate will be positive with respect to the cathode. Since the electrons emitted by the cathode are negative particles of electricity, and there is a positive charge on the plate, the electrons emitted by the cathode will be drawn to the plate (fig. 49). In other words, there is an electron flow through the tube, which results in a current flow in the circuit. If

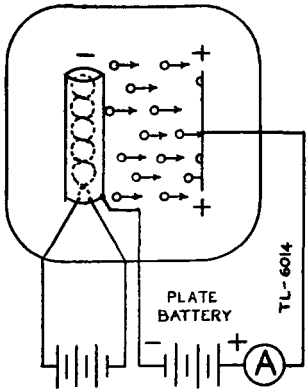

Figure 49. Electron flow in a diode when plate is positive.

the flow of current in the circuit is measured by meter *A* (fig. 49) while the voltage applied to the plate (known as *battery voltage* or *plate voltage*) is increased, it will be seen that the current flow through the tube, known as the *plate current,* increases. This is illustrated by the plate-voltage plate-current curve of figure 50.

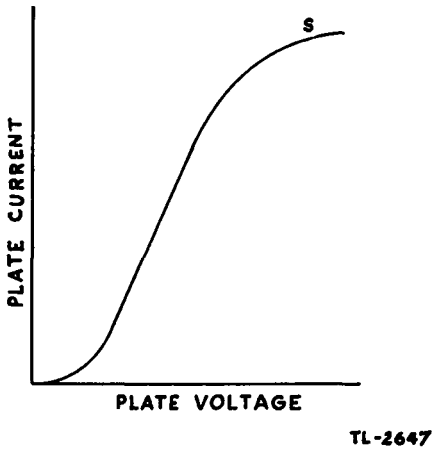

Figure 50. Plate current flow in a diode.

c. When the negative terminal of a battery is connected to the plate of the diode and the positive terminal is connected to the cathode (fig. 51), the plate will be negative with respect to the cathode, and therefore no electrons will be attracted to the plate. Since no electrons are traveling across to the plate, no current will flow through the tube.

d. The diode is a *conductor* when the plate voltage is positive, and is a *nonconductor* when the plate voltage is negative. This property of the diode permits the use of this tube for two very useful functions: *rectification* and *detection.*

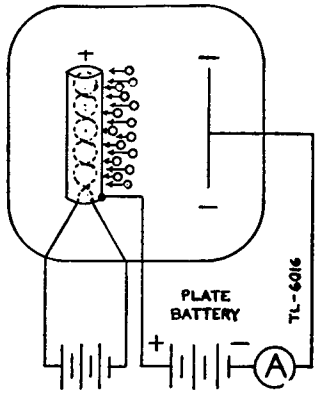

Figure 51. Diode action when plate is negative.

35. Diode as Rectifier

a. The ability of a diode to conduct, or pass, current in only one direction makes possible its use as a rectifier to convert alternating current into direct current. A diagram of a simple diode rectifier circuit is shown in figure 52. If an a-c source is connected between the plate and the cathode of such a circuit, one half of each a-c cycle will be positive and the other half will be negative. Therefore, the plate of the diode will be made alternately positive and negative with respect to the cathode. Since the diode conducts only when the plate is positive,

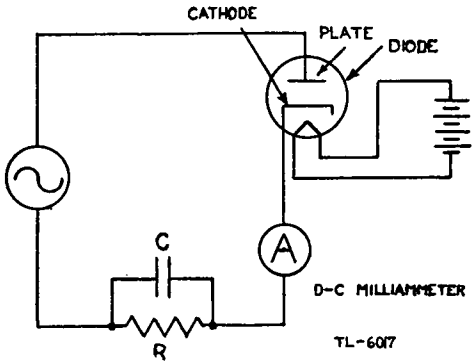

Figure 52. Diode used as a half-wave rectifier.

current flows through the tube only on the positive half-cycles of the a-c voltage, as shown in figure 53. Since the current through the diode flows in one direction only, it is direct current. This type of diode rectifier circuit is called a *half-wave rectifier,* since it rectifies only during one-half of the a-c cycle.

b. It can be seen from figure 53 that this direct current is quite different from pure direct current, since it rises from zero to a maximum and returns to zero during the positive half-cycle of the alternating current, and does not flow at all during the negative half-cycle. To

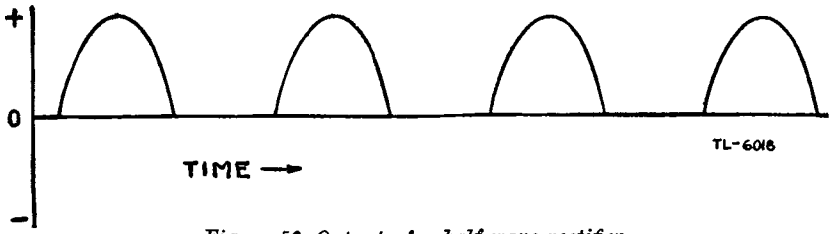

Figure 53. Output of a half-wave rectifier.

distinguish this type of current from pure direct current, it is referred to as *pulsating direct current,* or *rectified alternating current.*

c. To convert this rectified alternating current into pure direct current, the fluctuations must be removed. In other words, it is necessary to cut off the humps at the tops of the half-cycles of current flow, and to fill in the gaps due to the half-cycles of no current flow. This process is called *filtering.* In the circuit of figure 52, the d-c voltage output will appear across the load resistor *R,* because of the current flowing through it during the positive half-cycles. The capacitor *C,* having a small reactance at the a-c frequency, is connected across this resistor. This capacitor will become charged during the positive half-cycles, when voltage appears across resistor *R,* and will discharge into resistor *R* during the negative half-cycles, when no voltage appears across the resistor, thus tending to smooth out, or filter, the fluctuating direct current. Such a capacitor is known as a *filter capacitor.* It stores up voltage when it is present, and releases the voltage into the circuit

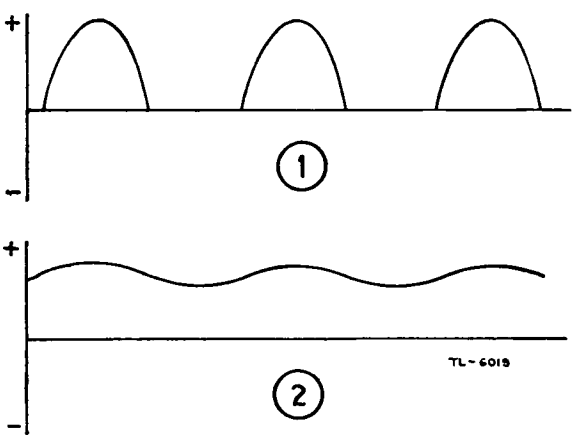

① *Without capacitor.*
② *With capacitor.*
Figure 54. Effect of filter capacitor.

when it is needed. Figure 54 shows the voltage appearing across resistor *R,* both with and without a filter capacitor in the circuit. It will be seen that the addition of a filter capacitor alone is not enough to

remove completely the fluctuations or ripple; in fact, no amount of capacitance, however large, would completely eliminate this ripple. However, if a filter circuit is added to the half-wave rectifier, as shown by the complete circuit (fig. 55), a satisfactory degree of filtering can be obtained. In this circuit, capacitors C_1 and C_2 are both filter capacitors, and fulfill the function described above. Inductor L is a filter choke having high reactance at the a-c frequency and a low value of d-c resistance. It will oppose any current fluctuations, but will allow direct current to flow unhindered through the circuit. The two filter

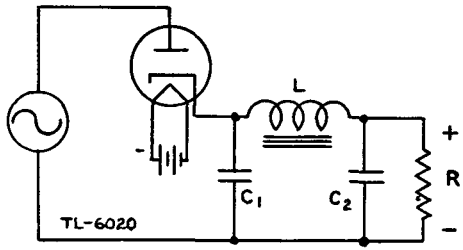

Figure 55. Filter circuit added to half-wave rectifier.

capacitors C_1 and C_2 bypass the ripple voltage around the load resistor R, while choke coil L tends to oppose the flow of any ripple current through the resistor.

d. The disadvantage of the half-wave rectifier is that no current flows during the negative half-cycle. Therefore, some of the voltage produced during the positive half-cycle must be used to filter out the ripple. This reduces the average voltage output of the circuit. Since the circuit is conducting only half the time, it is not very efficient. Consequently, the full-wave rectifier, so called because it rectifies on both half-cycles, has been developed for use in the power supply circuits of modern

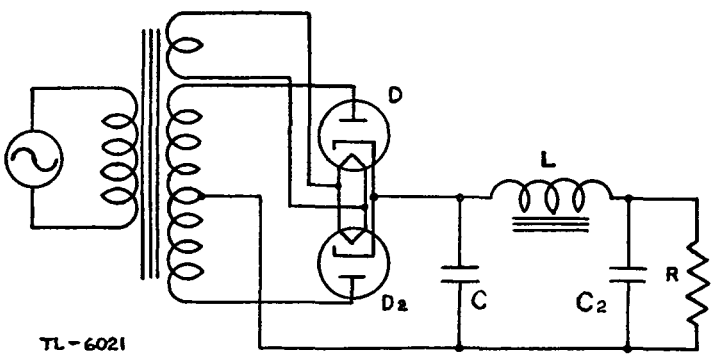

Figure 56. Full-wave rectifier circuit.

receivers and transmitters. In the full-wave rectifier circuit shown in figure 56, two diodes are used, one conducting during the first half-cycle and the other during the second half-cycle.

c. In the circuit of figure 56, the transformer has a center-tapped secondary winding, so that diode D_1 is connected to one half of this winding, while diode D_2 is connected to the other half. Resistor R is the load resistor common to both diodes. Capacitors C_1 and C_2 and inductor L form the filter circuit. During one half-cycle, the plate of diode D_1 will be positive with respect to the center tap of the transformer secondary winding, while the plate of diode D_2 will be negative; consequently, diode D_1 will conduct while diode D_2 will be nonconducting. During the other half-cycle, D_1 will be negative and nonconducting while D_2 will be positive and conducting. Therefore, since the two diodes take turns in their operation, and one of them is always conducting, current flows through the load resistor during *both* halves of the cycle. This is *full-wave rectification.*

f. If no filter circuit were used in the full-wave rectifier circuit of figure 56, the d-c output voltage across the load resistor R would appear

Figure 57. Output of a full-wave rectifier.

as in figure 57. Obviously, this voltage waveform is much easier to filter than the half-wave rectifier output, and the action of the capacitors and inductors in smoothing out this waveform is the same as for the half-wave rectifier voltage.

g. The circuit shown in figure 56 is the basis for all a-c operated power supplies used to furnish the d-c voltages required by transmitters and receivers. Note that the heater voltage for each of the two diodes is taken from a special secondary winding on the transformer.

36. Diode Characteristic Curves

a. The plate-current plate-voltage curve shown in figure 50 is an important characteristic of the diode vacuum tube, because it shows the amount of current that a diode will pass for any given plate voltage. Different types of diodes may have slightly different characteristic curves. All of these curves, however, indicate one important fact: the load, or plate, current is not proportional to the applied, or plate, voltage. For this reason Ohm's law is strictly applicable only to small increments, or changes, of currents and voltages. In general, current-voltage relations in vacuum-tube circuits are studied by means of experimentally obtained characteristic curves.

b. The curved portions, or bends, in the graph of figure 50 are the result of certain variations in the action of the diode. When the plate voltage is low, the electrons nearest the cathode are repelled back to the

cathode by the accumulated emitted electrons which are a little farther from the cathode, and only those electrons which are nearest the plate are attracted to the plate. This repelling effect around the cathode is known as the *space charge.* For intermediate values of the plate potential, the space charge in the vicinity of the cathode is reduced by the attraction of more electrons to the positively charged plate, and any increase in plate potential produces an appreciable increase in current, as shown by the curve of figure 50. For large values of plate potential, when the space charge is completely removed, the number of electrons reaching the plate per second is limited by the number emitted per second by the cathode, and is independent of plate potential. This latter condition is referred to as *saturation,* and a place along the curve (point *S* in fig. 50) is called the *saturation point.*

37. Operation of Triode

a. The *triode* differs in construction from the diode only in the addition of another element, called the *grid.* The grid is a cylindrical structure made of fine wire mesh, which is placed between the cathode and the plate of the tube so that all the electrons leaving the cathode must pass through it in order to reach the plate. Figure 58 is a drawing

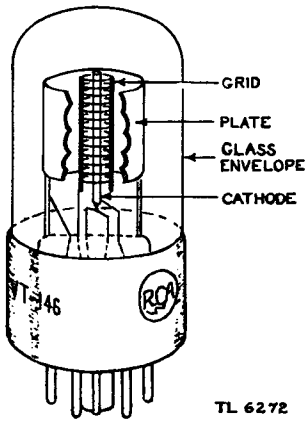

Figure 58. Typical triode.

which shows the arrangement of the grid, cathode, and plate in a typical triode. The grid is placed considerably closer to the cathode than is the plate, and consequently will have a very great effect on the electrons which pass through it.

b. If a triode is connected in a simple circuit, as shown in figure 59, the action of the grid can be studied. When a small negative voltage (with respect to the cathode) is put on the grid, there is a resultant change in the flow of electrons within the vacuum tube. Since the electrons are negative particles of electricity, and like charges repel one

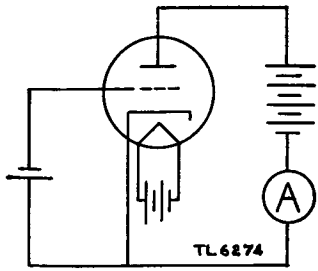

Figure 59. Triode with a small negative voltage on the grid.

another, the negative voltage on the grid will tend to repel the electrons emitted by the cathode, and thus tend to prevent them from passing through the grid on their way to the plate. However, since the plate is considerably positive with respect to the cathode, its attraction for the electrons is sufficiently strong to enable some of them to pass through the grid and reach the plate in spite of the opposition offered them by the negative voltage on the grid. Thus, a small negative voltage on the grid of the tube will reduce the electron flow from the cathode to the

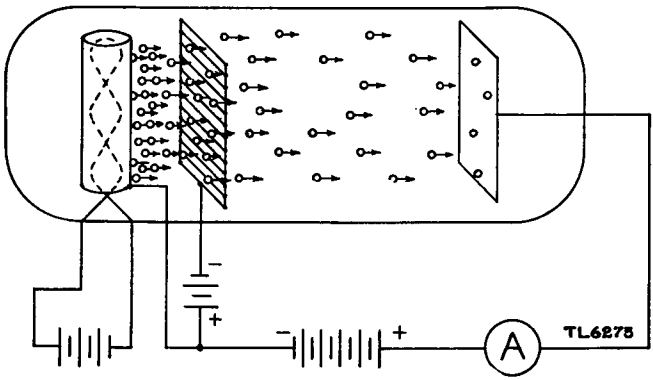

Figure 60. Effect of negative grid on plate-current flow.

plate (fig. 60), and consequently will reduce the value of plate-current flow between the cathode and the plate of the tube.

c. If the plate current in the circuit of figure 59 is measured by means of meter *A*, while holding the plate voltage constant and making the grid of the tube gradually more negative with respect to the cathode, the plate current will vary as shown in the *grid-voltage plate-current curve* of figure 61. Such a curve is also known as an $E_G - I_P$ characteristic curve. From this curve, it can be seen that as the grid of the tube is made more negative, less plate current will flow, since the more negative the grid the fewer electrons it permits to pass on to the plate. In the case of this particular tube (type 6C5), it will be noted from the characteristic curve that if the grid is made sufficiently negative (— 10

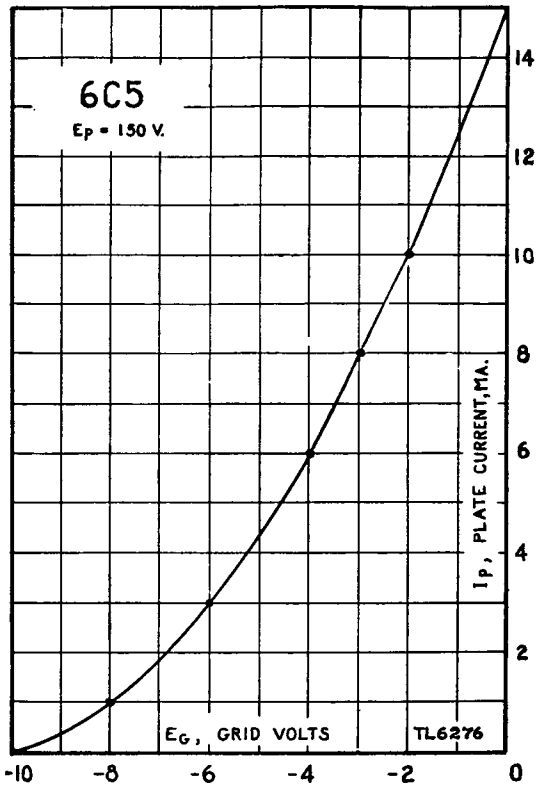

Figure 61. Grid-voltage plate-current curve.

volts), the plate current drops to zero. Thus, this value of negative grid voltage has cut off the flow of electrons within the tube. A negative voltage which is applied to the grid of a tube to hold its plate current flow at a given value is known as the *grid-bias voltage,* or more simply, the *bias;* that value of grid bias which will cut off the flow of plate current is called the *cut-off bias* for that tube. Since the plate current in a tube increases as the plate voltage is increased, the bias required to cut off plate current flow will increase as the plate voltage applied to the tube is increased.

d. The triode is now connected in a circuit (fig. 62) where an a-c (signal) voltage is applied to the triode, in addition to the grid-bias voltage. The a-c signal source is adjusted so that it applies 1 volt of a-c voltage to the circuit. Since the signal source and the 3 volts of negative bias are in series, on the positive half-cycle of the a-c signal there will be — 2 volts applied to the grid with respect to the cathode ($+1 - 3 = -2$); on the negative half-cycle there will be — 4 volts on the grid of the tube ($-1 - 3 = -4$). From the grid-voltage plate-current curve shown in figure 61, it can be seen that when there is no a-c signal

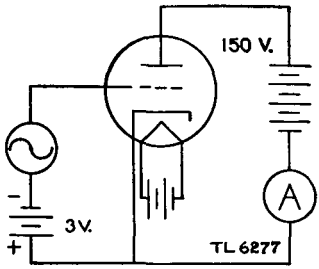

Figure 62. Triode with an a-c signal on the grid.

applied to the tube, the plate current will be fixed at 8 milliamperes by the 3 volts of bias supplied by the bias battery. When the a-c signal is applied to the tube, on the positive half-cycles there will be — 2

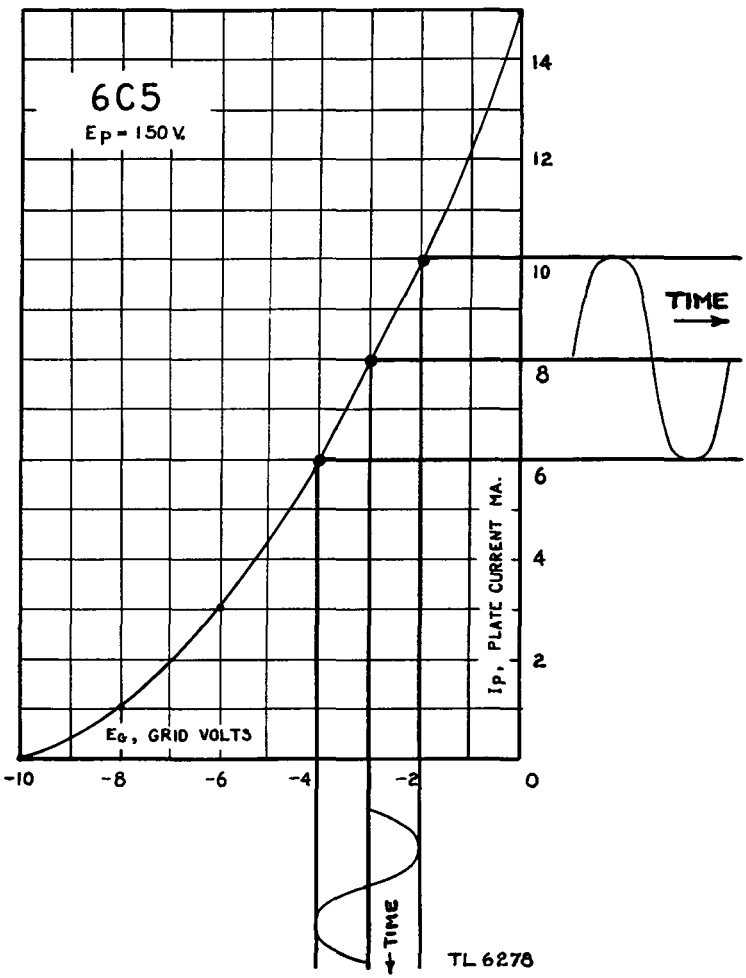

Figure 63. Plate current waveform resulting from an a-c grid voltage.

volts on the grid of the tube and the plate current will increase to 10 milliamperes; but on the negative half-cycles there will be — 4 volts on the grid and the plate current will decrease to 6 milliamperes. Thus, a 1-volt a-c signal will cause a plate current change of 4 milliamperes in this tube. This can be demonstrated graphically by showing the a-c voltage waveform on the grid-voltage scale of the $E_G - I_P$ characteristic curve, and plotting the plate-current waveform on the plate-current scale of the graph (fig. 63).

e. An examination of figure 63 will show that the waveform of the plate current variation is an exact reproduction of the waveform of the a-c voltage applied to the tube. By carrying this process further, it can be shown that if the negative bias is increased to 5 volts, so that the grid voltage varies from — 4 to — 6 volts over the a-c cycle, the plate current change will vary from 3 to 6 milliamperes, showing a total change of only 3 milliamperes. If the negative bias voltage is increased to 9 volts, so that the grid voltage varies from — 8 to — 10 volts over the a-c cycle, then the plate current change will be only 1 milliampere. From this it can be seen that if the negative bias is increased, there is a resultant decrease in the plate current change for a given signal input. This method of controlling the output of a tube by varying the bias voltage is often used as a means of volume control, as will be shown later in the study of radio receiver. It should be noted, however, that if the grid voltage is increased to too high a negative value (fig. 64①), there is noticeable distortion of the output plate current wave. Distortion also results if the cathode temperature is lowered to such a degree that the emission is insufficient (fig. 64②). A distorted output is generally, but not always, objectionable.

38. Triode Circuits; Plate Loads

a. In order to make use of the variations in the plate current of a

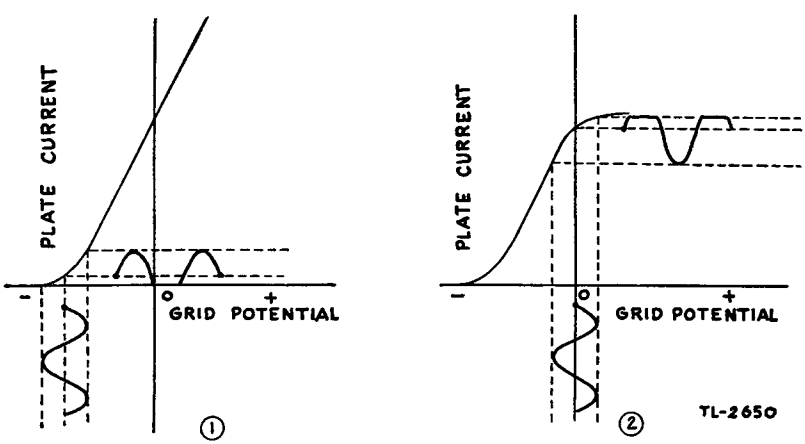

Figure 64. Distortion due to high grid bias and low cathode temperature.

triode due to variations in grid voltage, some sort of a device must be present in the plate circuit of the tube to act as a load. This plate load can be a resistor, an inductor, or a tuned circuit.

b. A typical triode circuit with a resistor used as a plate load is shown in figure 65. If the tube in this circuit is biased at — 3 volts and the applied a-c signal voltage to the grid is 1 volt, the plate current variation of 4 milliamperes will produce a voltage variation of 40 volts across the 10,000-ohm resistor. On the positive half-cycles, the negative voltage of 2 volts applied to the grid causes a current flow of

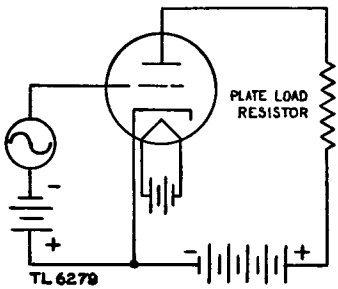

Figure 65. Triode using a resistor as a plate load.

10 milliamperes through the plate load resistor, thus producing a voltage drop of 100 volts (by Ohm's law). On the negative half-cycles, the negative voltage of 4 volts applied to the grid causes a current flow of 6 milliamperes through the plate-load resistor, and a corresponding voltage drop of 60 volts. The difference between these two voltage drops, or 40 volts, is the *voltage variation* in the plate circuit produced by the a-c voltage applied to the grid. Thus it can be seen that a signal voltage change from — 1 to + 1 (or a total change of 2 volts) can produce a voltage change of 40 volts in the plate circuit; in other words, the original (grid) signal voltage has been amplified 20 times. This process is the basis for all vacuum-tube amplification.

c. The use of a resistor as the plate load of a vacuum tube has one disadvantage: its resistance will reduce the actual d-c voltage applied

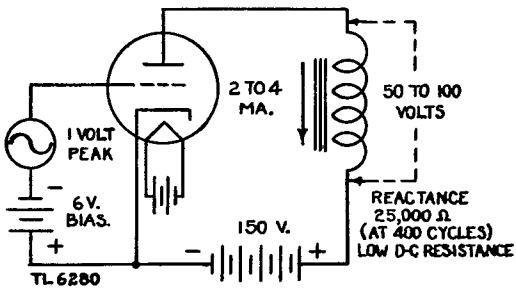

Figure 66. Triode using an inductor as a plate load.

to the plate of the tube, and so reduce the amplification of the tube. To overcome this loss in plate voltage, inductors are often used as plate loads of vacuum-tube circuits (fig. 66). By choosing an inductor which has a high value of reactance at the frequency of the alternating current, a large voltage will be built up across the reactance, because of the plate-current changes in the tube. However, the d-c plate voltage applied to the plate of the tube will be quite high, since the d-c resistance of an inductor may be very small, and consequently the amplification of the tube will be increased.

d. If it is desired to amplify a signal of a given frequency, a tuned circuit which resonates at this frequency may be used for a plate load (fig. 67). Since the impedance of such a circuit will be very high at the resonant frequency, the signal voltage appearing across the tuned

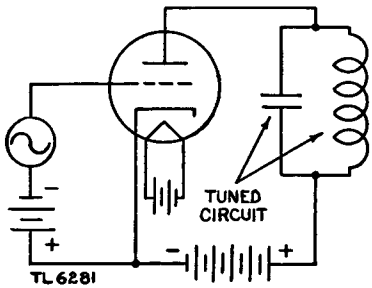

Figure 67. Triode using a tuned circuit as a plate load.

circuit will also be high. By using a tuned circuit as the plate load for a vacuum tube, it is possible to obtain the amplification *only at the resonant frequency of the tuned circuit.* The circuit of figure 67 is typical of the r-f amplifier circuits used in radio transmitters.

39. Triode Circuits; Biasing Methods

a. There are several different methods of obtaining a negative grid-bias voltage for a triode. The simplest of these is the *fixed bias,* where a suitable negative voltage is obtained from a fixed source, such as batteries or a rectifier power supply. Examples of this type of bias are shown in figures 59, 62, and 65.

b. A vacuum-tube circuit can be arranged to produce its own bias, and such a method is known as *self-bias.* One type of self-biasing, called the *cathode-return-resistor bias,* is shown in a triode-amplifier circuit in figure 68. In this circuit, the plate current from the battery flows through the cathode resistor on its way through the tube and back to the battery through the plate-load resistor. Since the current is flowing through the cathode resistor toward the cathode, there will be a voltage drop across this resistor which will make the grid *negative with respect to the cathode.* This is the proper condition for biasing. The

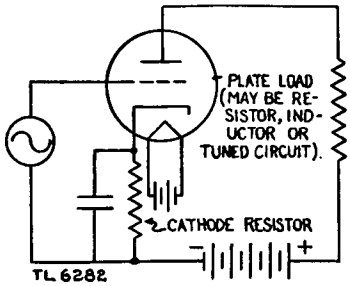

Figure 68. Triode amplifier circuit with self-bias.

convenience of this type of bias is obvious, since it eliminates the need for a separate source of bias voltage. For this reason, cathode-resistor bias is widely used in both transmitters and receivers. Omission of the shunt capacitor, or too small a value of this capacitor, produces *degeneration* (par. 102c) as a result of the variations of grid bias which then accompany the a-c pulsations of the plate current. This capacitor should have a low reactance at the signal frequency, thus keeping the cathode resistor from dropping the a-c signal voltage as well as the d-c plate voltage.

c. Another form of self-bias is called the *grid-leak bias,* and is used under conditions where grid current flows. Two examples of this type of bias are shown in figure 69. The bias results from the drop in potential across the resistor when grid current flows on positive a-c signal swings. This resistor is called a *grid-leak.* The capacitor across the leak offers a low impedance to alternating current, so that the bias is

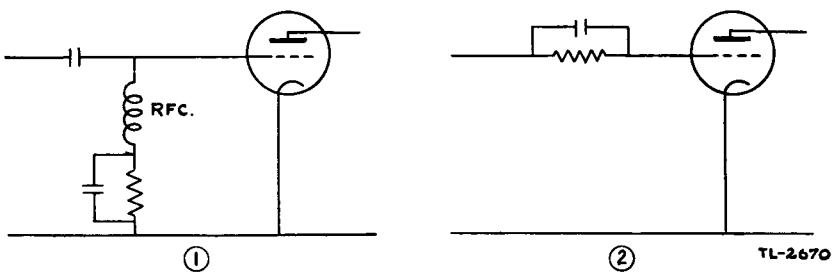

① *Shunt arrangement.* ② *Series arrangement.*
Figure 69. Grid-leak bias circuits.

essentially steady in character and is a function of only the magnitude, or size, of the grid current. A disadvantage of grid-leak bias is that if for any reason the excitation is removed, the bias is removed also, and the plate current may assume dangerous proportions, causing damage to the vacuum tube.

d. To combine the advantage of grid-leak and battery (or fixed) bias, transmitter amplifiers often use a combination of both types in series.

Some types of amplifier tubes are conveniently designed, as regards bias supply, to operate with the grid at cathode potential; these are known as *zero-bias tubes.*

40. Triode Characteristic Curves

a. There are two general types of characteristic curves for triodes. One is for the case of no load in the plate circuit, and is called the *static characteristic curve;* the other is for the case of a load in the plate circuit, and is known as the *dynamic characteristic curve.* Use has already been made of the static curve in figures 61, 63, and 64, where the tube was operating without a plate load. In practice, however, the output of a tube feeds into some sort of load which can be represented by a resistance value (assumed to be the equivalent of the load). This results in dynamic characteristic curves that reflect more accurately the operating conditions of the tube. A comparison of the static and dynamic curves, with the two circuits that are used to obtain each, is shown in figure 70③. The difference in the slope of the two curves is due to the fact that the plate-to-cathode potential for no load is constant regardless of the plate current, whereas with a load in the plate circuit the potential across the load (and consequently the plate-to-cathode potential) varies with the current. Assume that the normal operating point is the same for the tube with or without external load; that is, regard the operating point as the point of intersection of the two curves of figure 70③. Without an external load (fig. 70①) on a positive

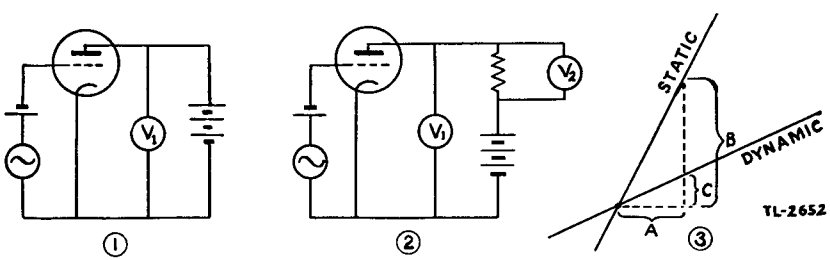

① *Without external load.* ② *With external load*
③ *Corresponding characteristics.*
Figure 70. Triode characteristic curves.

swing of signal potential A (fig. 70③), the plate current rises by an amount B. With an external load (fig. 70②), the increase in current which follows a positive grid swing is in turn accompanied by a potential drop ($I \times R$) across the load resistor (as read by voltmeter V_2). Thus the potential available across plate to cathode within the tube (as read by voltmeter V_1) is reduced; and the consequent increase in current C is less than it was under the no load condition. On the negative half-cycle of the signal voltage, the plate current is reduced,

and the potential drop across the load is less than it is when no signal is applied. Thus the voltage across the tube rises, so that the available plate-to-cathode potential exceeds the corresponding value under the no load condition. A typical set of static plate-current grid-voltage curves for various plate potentials is shown in figure 71. Many handbooks on vacuum tubes confine the characteristics illustrated to *families* of curves of the static type.

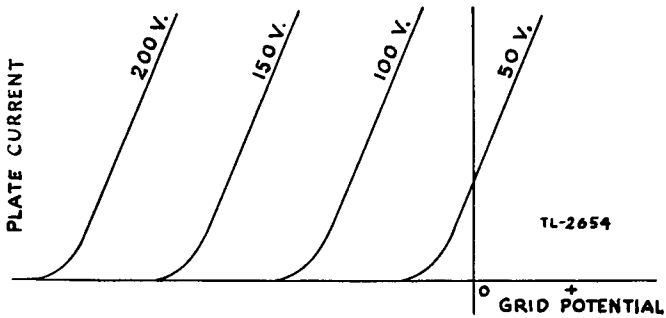

Figure 71 Plate-current vs. grid-potential curves for triode.

b. Observe from the set of static characteristic curves of figure 72, that of the three quantities, grid potential, plate potential, and plate current, any two will determine the third. Thus, corresponding to a plate current of 10 milliamperes and a plate potential of 50 volts, the

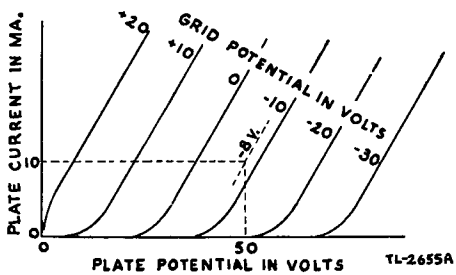

Figure 72. Plate-current vs. plate-voltage curves for a triode.

required grid potential is — 8 volts. Suppose it is desired to obtain these same relations—plate current, 10 milliamperes; plate potential, 50 volts; and grid potential — 8 volts—with a load resistance of 4,000 ohms. This requires a total plate-supply potential of $50 + [4{,}000 \times (10/1{,}000)]$ volts $= 90$ volts, 50 across the tube and 40 across the load resistance. The current in the load resistance follows Ohm's law, that is, the current through the resistance is proportional to the potential across it. This proportionality can be represented by a straight line on the current-voltage graph of figure 73. The line is determined by any two points on it, two convenient points being P and

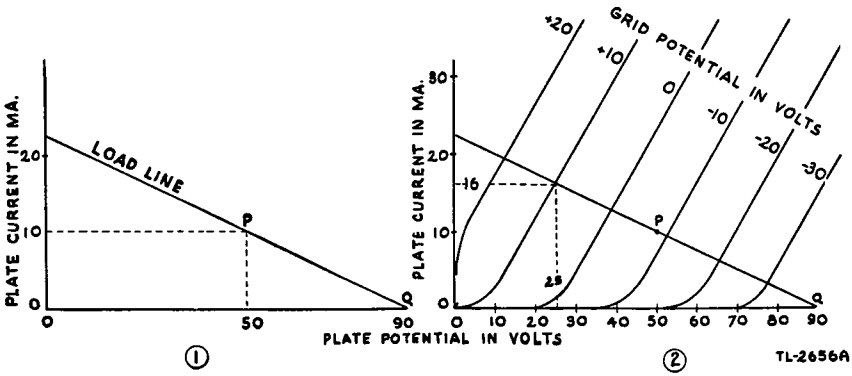

Figure 73. Load line for a triode.

Q, as in figure 73①. P is for a current of 10 milliamperes and a voltage drop across the resistance of 40 volts (50 volts across the tube); Q is for zero current and zero drop across the resistance (90 volts across the tube). If P is taken as the normal operating point, the grid swing due to an impressed signal voltage will cause variations along this load line in both directions from P. Corresponding to an instantaneous grid potential of 10 volts, the plate current, plate voltage, and voltage across the load can be found by following the 10-volt characteristic to where it intersects the load line. From the curves of figure 73②, this yields 16 milliamperes plate current, 25 volts plate potential, and $90 - 25 = 65$ volts drop across the load. The family of plate-current plate-potential curves is thus useful in determining the limitations of a particular tube under various operating conditions. A particular tube can be selected to fit certain circuit constants, or vice versa, with the aid of the information contained in the vacuum-tube characteristics.

41. Special Characteristics of Vacuum Tubes

a. Since many different types of vacuum tubes are used in modern radio circuits, it is important to have different means of classifying these tubes according to the performance which may be expected of them. Among these characteristics, as they are called, are the *amplification factor,* the *mutual conductance,* and the *plate resistance* of the tube.

b. The *amplification factor* μ, or *mu,* of a tube is the ratio of the plate-voltage change and the grid-voltage change required to produce the same plate-current change in the tube. For example, if the plate voltage of a tube must be increased by 20 volts in order to increase the plate current as much as would a 1-volt change of grid voltage, then the tube has an amplification factor of 20. The amplification factor of a tube is stated for a given set of operating conditions, such as grid-bias voltage, plate voltage, etc., since the amplification factor will change if

these conditions are changed. The amplification factor of a tube gives a theoretical approximation of the maximum voltage amplification which can be expected from the tube under given operating conditions.

c. The *mutual conductance,* or *transconductance,* of a tube is a characteristic from which the power sensitivity can be estimated, since it determines what plate-current change may be expected from a given grid-voltage change under a given set of operating conditions. Mutual conductance, or transconductance, is the ratio of a small change in plate current to the change in grid voltage producing it. It is measured in *mhos,* which is simply the word ohm spelled backwards and with an "s" added. For example, if a grid voltage change of 1 volt produces a plate-current change of 1 ampere in a given tube under certain operating conditions, the tube will have a mutual conductance of 1 mho. But since very few tubes will stand a plate current flow of 1 ampere (receiving tubes draw only a few milliamperes of plate current), it is more convenient to rate mutual conductance in *micromhos* (or millionths of a mho). Thus, if a tube has a mutual conductance of 5,000 micromhos, a 1-volt change in grid voltage will produce a 5 milliampere change in plate current.

d. The *plate resistance* of a tube is simply the resistance between the cathode and plate of the tube to the flow of alternating current. It is the ratio between a small change in plate voltage and the corresponding change in plate current. For example, if a 10-volt change in plate voltage produces a 1-milliampere change in plate current, the plate resistance of the tube is 10,000 ohms.

42. Interelectrode Capacitance

The inherent capacitance between grid and plate elements of a triode is of sufficient importance at high frequencies to require special consideration in radio circuits. Where this capacitance is undesirable, it can be counteracted by introducing a neutralizing circuit which presents r-f potentials equal in magnitude but opposite in phase to those occurring across the interelectrode capacitance, with the result that the effects of the interelectrode capacitance are nullified. The extra circuit complications can generally be avoided by the use of tetrodes or pentodes, 4- and 5-element tubes, respectively, which are particularly designed to have low interelectrode capacitance. The grid-plate capacitance of an ordinary receiving triode runs about 3 micromicrofarads. This represents a capacitive reactance of 53,000 ohms at 1 megacycle and only 530 ohms at 100 megacycles. Tetrodes and pentodes offer corresponding reactances of about 16,000,000 ohms at 1 megacycle and 160,000 ohms at 100 megacycles.

43. Tetrode

a. In an effort to reduce the grid-plate capacitance within the tube (par. 42), a fourth element was added to the conventional triode. This

fourth element is called a *screen grid,* and is placed between the grid and the plate of the tube. A typical screen grid, or tetrode (4-element) tube connected in a circuit is shown in figure 74. Observe the changes in this circuit due to the addition of the screen grid. Notice that the screen grid is operated at a positive voltage somewhat lower than that

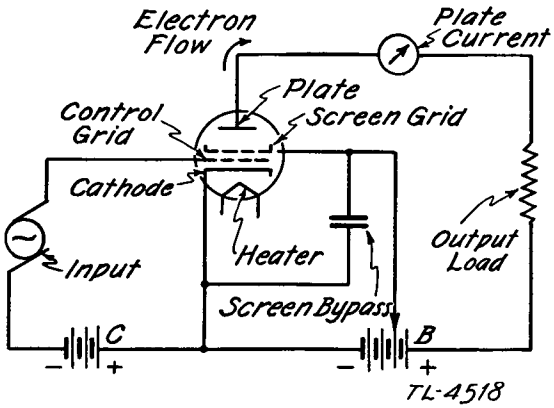

Figure 74. Tetrode amplifier circuit.

applied to the plate. Since it is operated at a positive voltage, the screen assists the plate in attracting electrons from the cathode. Some of these electrons will be attracted to this grid by the positive voltage on it, thus causing screen current to flow in the circuit. However, since the construction of the screen grid is similar to that of the control grid, most of the electrons will pass through the spaces between its wires on to the plate, because of the attraction of the higher positive voltage on the plate. Since the screen grid is bypassed to the negative side of the circuit (bypassed to ground) by a screen bypass capacitor having a small reactance at the signal frequency, it acts as a shield or screen between the grid and the plate, and thus effectively reduces the capacitance between these two electrodes.

b. If the screen grid in this circuit is not operated at a positive voltage, but is connected to the cathode, it will have a controlling effect on the electron flow, similar to that of the control grid of the tube, thus reducing the plate-current flow to a value too small for satisfactory operation. The value of a positive voltage on the screen grid of a tetrode will determine to a large extent the maximum value of current which will flow in the plate circuit. Thus, improper screen voltages can cause faulty operation in tetrode amplifier circuits.

c. The tetrode has several advantages over the triode, in addition to its greatly reduced grid-plate capacitance. Among these are a higher amplification factor, and greater power sensitivity. In general, tetrodes can be used for the same purposes as triodes. Since they were devel-

oped to overcome the need for neutralization in r-f amplifier circuits, tetrodes have been widely used in the r-f amplifier stages of radio receivers and transmitters.

44. Pentode

a. Although the tetrode would seem to be an ideal tube, since it overcomes the disadvantage of the higher grid-plate capacitance of the triode and, at the same time, is capable of providing higher amplification in a circuit than is the triode, the effect known as *secondary emission* limits its application to a great extent. The pentode, or 5-element tube, was developed to overcome the effect of secondary emission. If a tetrode is operated at fairly high plate and screen voltages, and large values of signal voltage are applied to its control grid, the electrons strike the plate with sufficient force to knock loose other electrons already on the surface of the plate. These other electrons, known as *secondary electrons,* are attracted by the positive voltage on the screen grid. When secondary emission occurs, the screen gets more than its share of the available electrons, while the number reaching the plate is greatly reduced. Thus, the screen current will increase while the plate current will decrease, causing a reduction in the amplification of the tube and distortion in its output.

b. If a third grid is placed between the screen grid and the plate of the tetrode, and is connected to the cathode so that it will have the same charge as the electrons, it will force any secondary electrons back to the plate, since like charges repel one another. This third grid is called the *suppressor grid,* since it suppresses the effects of secondary emis-

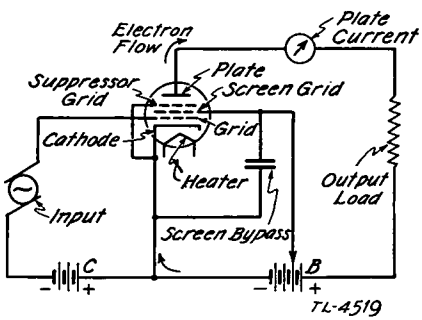

Figure 75. Pentode amplifier circuit.

sion by preventing the flow of secondary electrons to the screen. The suppressor grid will not reduce the electron flow to the plate, even though it is operated at a negative potential. This is because it is placed so close to the plate that the attraction of the positive voltage on the plate is much greater than any tendency on the part of the suppressor grid to repel the electrons.

c. A pentode used with a typical amplifier circuit is shown in figure 75. Note that the only difference between this circuit and the tetrode amplifier circuit of figure 74. is the addition of the suppressor grid. Both the cathode and the suppressor grid are at the same potential.

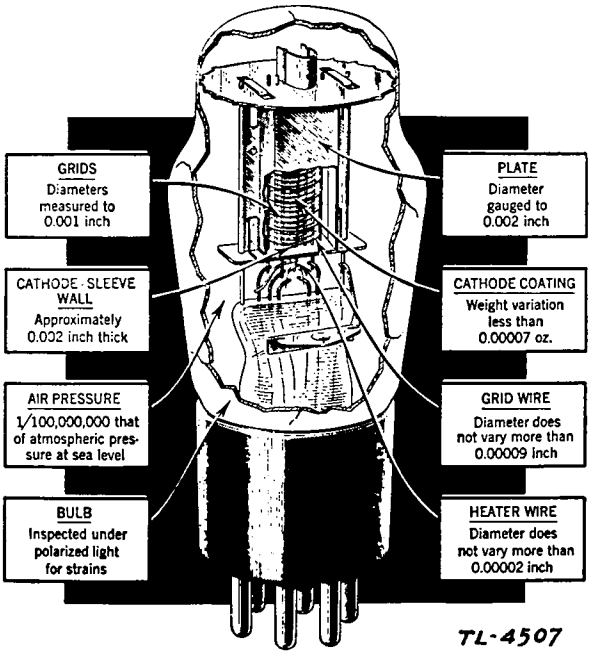

Figure 76. Typical Pentode.

d. The construction of a typical pentode power-amplifier tube is shown in figure 76. Such a tube is suitable for use in the power-output stages of radio receivers.

45. Variable-mu Tube

a. The amplification of a tube is controlled by varying the bias voltage applied to the grid, but normally the range of this control is limited by the value of cut-off bias for the tube. It is most desirable in the r-f amplifiers of receivers, the gain of which is controlled by automatic volume control, to be able to vary the amplification over a much wider range, so that large values of signal voltage (strong signals) may be handled. To permit this increased range of gain control, the variable-mu tube has been developed. This type of tube is also known by several other names, two of which are *supercontrol* and *remote cut-off.* The only difference in construction between variable-mu tubes and normal, or *sharp cut-off,* types, is the spacing of the turns of the grid. In sharp cut-off tubes, the turns of the grid wire are equally spaced, while in remote cut-off types the grid turns are closely spaced on both ends

and widely spaced in the center. When small negative voltages are applied to the grid of a variable-mu tube, the electrons will flow through all the spaces in the grid. As the negative voltage is increased, however, the electrons will no longer be able to pass through the narrow spaces on the ends of the grid structure, though they will still be able to pass through the relatively greater spaces at the center of the grid. A much greater value of negative voltage will thus be required to cut off the plate-current flow in this type of tube. This remote cut-off tube is so named because the cut-off bias value is greater than (remote from) the value required to cut off plate-current flow in tube of evenly spaced grid turns.

b. Figure 77 shows the $E_G - I_P$ curves for a typical sharp cut-off pentode and a typical remote cut-off pentode on the same graph. Note that the cutoff bias for the tube with the uniformly spaced grid is —6 volts.

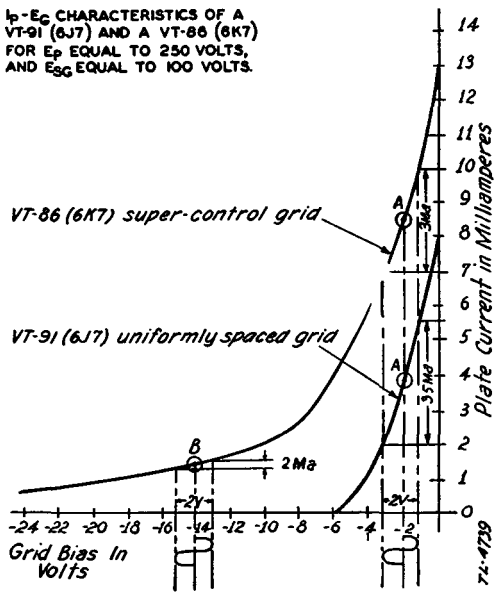

Figure 77. Comparison between a sharp cut-off pentode and a remote cut-off pentode.

Thus the range of gain control which can be effected by grid-bias variation, and the maximum value of signal voltage which can be applied to the grid, are both limited. But the curve for the supercontrol pentode shows that plate current still flows even at a grid bias of —24 volts. Thus, by the use of a variable-mu tube, both the range of gain control by grid bias variation and the value of signal voltage which can be handled by the grid have been extended several times.

c. Variable-mu pentodes are used in the r-f amplifier stages of practically all modern radio receivers. They are not generally used in a-f

amplifiers, however, because of extreme curvature, or nonlinearity, of their $E_G - I_P$ curves, which would result in distortion of the output voltage when large signal voltages were applied to their grids.

46. Beam-power Tube

a. In recent years a new type of power-amplifier tube has been developed. Compared with other tetrode and pentode power-amplifier tubes, this tube has the advantages of higher power output, higher power sensitivity, and higher efficiency. This type of tube is called the *beam-power tube,* since by its construction the electrons are caused to flow in a concentrated beam from the cathode, through the grids, to the plate. The only difference in construction between the beam-power tube and normal tetrodes and pentodes is that the spaces between the turns

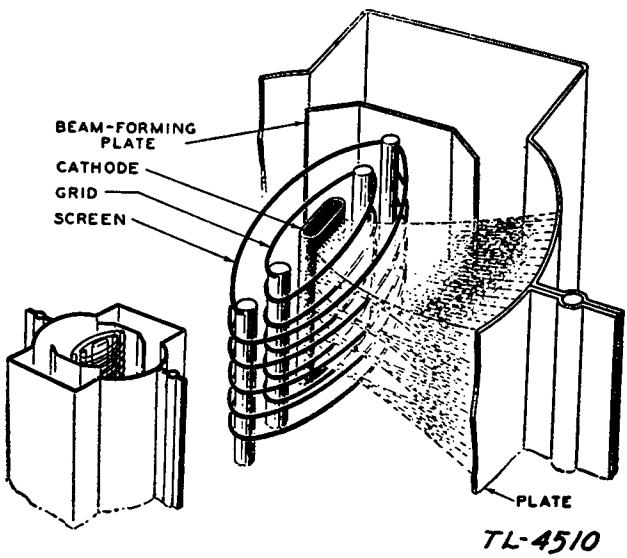

Figure 78. Internal structure of a beam-power tube.

of the several grids are lined up and two beam-forming plates are provided. Figure 78 shows the internal construction of a beam-power tetrode. Since the spaces between the turns of the grids are lined up, fewer electrons will strike the screen grid. The screen current will therefore be decreased, while the plate current will be increased. Since the power output of a circuit is proportional to the value of plate current flowing through the load, the power output will thus be increased. The two beam-forming plates are usually connected to the cathode and, having the same charge as the electrons, cause them to flow in a beam from the cathode, through the grids, to the plate. The placement of the beam-forming plates is such that it forces the electrons to flow through the desired portions of the grids, and prevents them from striking

the wires which support the grids. Thus, by causing the electrons to flow in a beam, the number of electrons reaching the plate can be increased, thereby greatly increasing the operating efficiency of the tube.

b. Figure 79 illustrates an a-f power-amplifier circuit using a beam-power tetrode. Notice that in this case the beam-forming plates are connected to the cathode inside the tube.

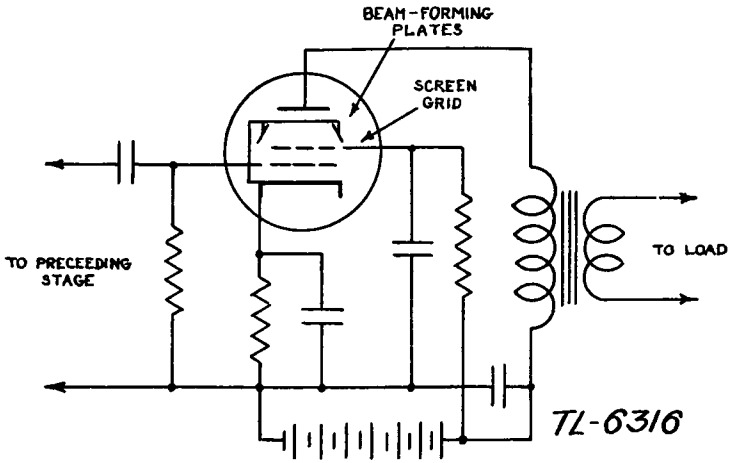

Figure 79. Beam-power tetrode, a-f power amplifier.

c. A beam-power tube operated at the same voltages as a normal tetrode or pentode type will provide more power output for a given value of signal (input) voltage than the latter, and have a much higher plate-circuit efficiency. Both beam tetrodes and beam pentodes are used in radio receivers and transmitters. In beam tetrodes, the effect of secondary emission is reduced to a minimum by the action of the beam, and the replacement of the beam-forming plates. Beam-power tubes are widely used as r-f and a-f amplifiers in radio transmitters, and as output a-f amplifiers in radio receivers.

47. Multi-element Tubes

a. In addition to the diodes, triodes, tetrodes, and pentodes which have been studied, there are many special types of vacuum tubes used in radio circuits; a large number of types are used which combine the electrodes of two or more tubes in one envelope. These complex tubes are usually named according to the equivalent single-tube types of which they are composed. Thus a twin triode contains the electrodes for two triodes in one envelope. Other complex tubes are *diode triodes, diode pentodes, triode pentodes.* One complex type has recently been introduced which combines the functions of *three* tubes within one envelope, namely, a diode, a triode, and a power-output pentode. *All of these tubes however complex follow the basic rules for tube operation.*

To understand the operation of any one of them in a circuit it is only necessary to consider the effect of the various electrodes on the flow of electrons within the tube.

b. The *pentagrid-converter tube* is a special type which has five grids, and is used in a certain stage of the superheterodyne receiver to take the place of two separate vacuum tubes. The pentagrid-converter tube is used for frequency conversion. (See sec. VIII.)

c. The *duplex-diode triode* and the *duplex-diode pentode* are two popular types of receiver tubes. In receiver circuits, one of the diodes is used together with the cathode as a diode-detector circuit, while the other diode is used together with the cathode to rectify the signal voltage in order to produce a source of automatic volume control. The triode or pentode section of such tubes is used as an a-f amplifier.

48. Directly and Indirectly Heated Cathodes

a. A cathode which is in the form of a filament directly heated by passing a current through it has the disadvantage of introducing a ripple in the plate current when alternating current is used for heating. The ripple is most objectionable if the plate and grid returns are made to one end of the filament. In figure 80 the resistor *AB* repre-

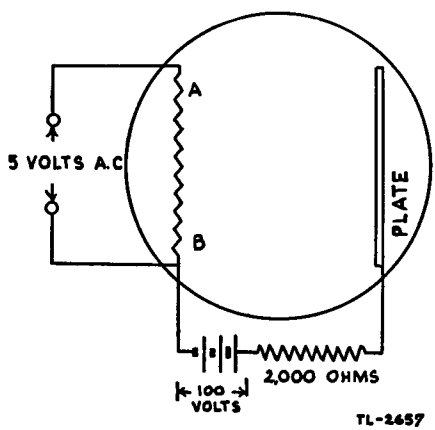

Figure 80. Directly heated cathode.

sents a filament which is heated by applying 5 volts of alternating current across it. When no current flows through the tube, the plate is maintained at a potential of 100 volts above that of point *B*. For a 5-milliampere steady plate current, the potential across the tube from *B* to the plate is always $100 - [2{,}000 \times \frac{5}{1{,}000}] = 90$ volts; whereas the potential from *A* to the plate varies from 85 to 95 volts, depending upon the potential of point *A* relative to point *B*. The total plate current rises and falls at the frequency of the filament

current. This condition is remedied to a large extent by connecting the grid and plate returns to the electrical center of the filament, as in figure 81① or ②. But even with a center-return arrangement, with a 60-cycle filament current, there is still present a 120-cycle modulation of the plate current. This double-frequency ripple arises from the effects on the plate current provided by the intermittent rise and fall of the filament temperature, the voltage drop in the filament, and the alternating magnetic field set up by the filament current. Temperature fluctuations in the filament are ordinarily negligible. The magnetic field about the filament serves to deflect the electrons from their normal paths; and, in effect, serves to reduce

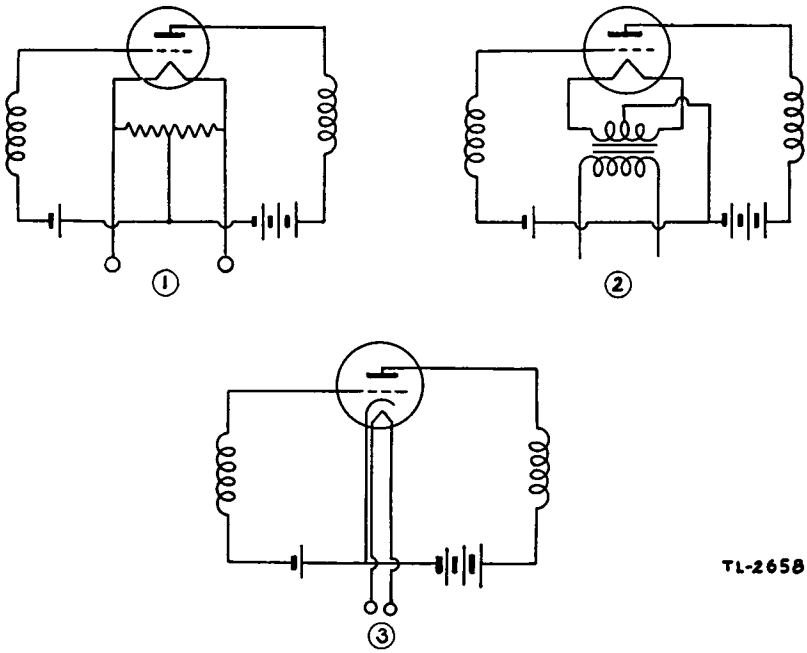

Figure 81. Methods of utilizing a-c filament supply.

the plate current. The resulting plate current is largest when the heating current is zero, that is, at intervals which occur at double the heating current frequency. With a voltage drop in the filament, the space current from the negative half of the filament exceeds that from the positive half, because of the manner in which space current varies with the electrostatic field across the tube. (Space current varies as the three-halves power of the plate potential.) The result is that each time the current is at a maximum in either direction in the filament, that is, at a frequency which is double the heating-current frequency, the space current is slightly greater than its value during those instants when the current through the filament is zero and the potential of the filament is uniform.

b. In transmitting tubes and in the power stages of a receiver the signal currents are large, and the double-frequency ripple current is negligible in comparison. However, in all other receiver tubes, indirectly heated cathodes (fig. 81③) are necessary wherever a-c filament operation is desired. An indirectly heated cathode is formed by a metallic sleeve closely surrounding a heated filament and electrically insulated from the filament. The cathode is heated by radiation from the filament. Such an emitter is sometimes referred to as an equipotential cathode, since all parts of it are at the same potential. For purposes of simplicity, tube-heater elements and heater-power circuits are not shown in circuit diagrams throughout this manual.

SECTION V

VACUUM-TUBE DETECTORS

49. Detection

a. There are two general kinds of radio-frequency (r-f) signals that can be received by a radio receiver: *modulated* r-f signals which carry speech, music, or other audio sounds, and *continuous wave* (c-w) signals which are "bursts" of r-f energy conveying code. These types of r-f signals are described in more detail in sections XI and XII. The process whereby the intelligence carried by a r-f signal is extracted as an a-f (audio-frequency) signal is called *detection,* or *demodulation.*

b. The modulated r-f signal can be detected by any one of several types of vacuum-tube detectors: the simple *diode detector,* the *grid-leak detector,* the *plate detector,* or the *regenerative detector.* The c-w signal is generally detected by the *heterodyne detector.*

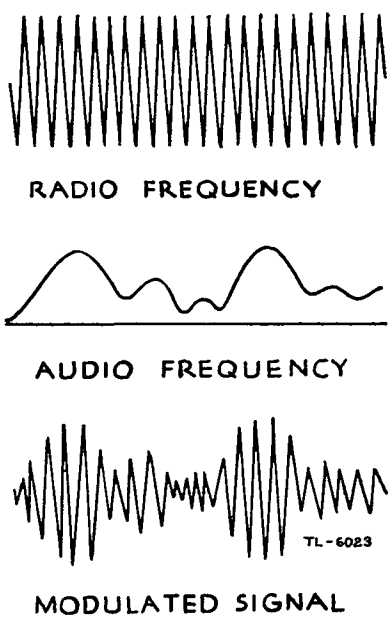

Figure 82. Formation of a modulated waveform.

50. Phone Detection

In paragraph 5 it was shown that a radiotelephone or a modulated signal is produced by controlling the r-f output of a transmitter at an a-f rate. The chart in figure 82 shows an r-f voltage, an a-f voltage, and the two of them combined to form a *modulated-signal voltage.* The modulated signal is the waveform of the voltage which will appear in the antenna circuit of a radio receiver when a modulated wave is being received. The detector, then, must separate the a-f voltage from the r-f voltage, so that the a-f voltage can be converted into sound by means of a headset or loudspeaker. The detector must demodulate the signal.

51. Diode as Detector

a. In the study of the diode as a rectifier (par. 35) it was shown that the diode is a conductor when the plate voltage is positive, and that it is a nonconductor when the plate voltage is negative. This property of the diode makes the tube useful for the detection of r-f signals.

b. The action of the diode as a detector can best be explained by an examination of a simple diode radio receiver (fig. 83). In this receiver the modulated r-f signal voltage will appear across the parallel-tuned

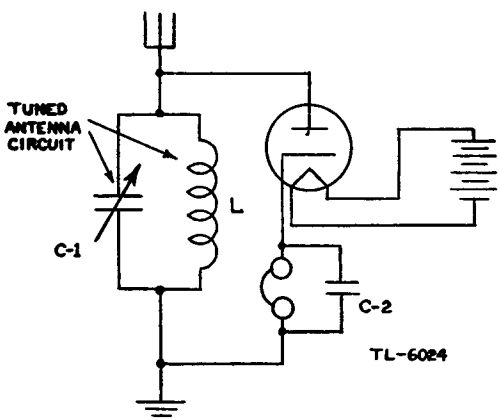

Figure 83. Simple diode radio receiver.

circuit formed by the coil L and the variable capacitor C_1 when this antenna circuit is tuned to resonance with the incoming r-f signal. Since the diode is connected to this antenna circuit, it will rectify the signal voltage, and the rectified-signal current will flow through the headset, thereby producing sound. Obviously, the a-f part, or component, of the voltage which appears across the headset must not be filtered out, as this voltage produces the sound. But the headset will have an extremely high reactance at the frequency of the incoming signal, which would reduce the amount of r-f current flowing in the

circuit. For this reason capacitor C_2 is placed across the headset (fig. 83). The size of this capacitor is chosen so that it will have a low reactance at the radio frequencies, and a relatively high reactance at the audio frequencies, thus providing minimum opposition to r-f current

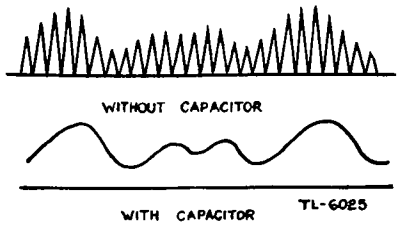

Figure 84. Effect of a bypass capacitor.

flow in the entire circuit, while providing maximum opposition to a-f current flow. Consequently, the maximum a-f voltage appears across the headset. Figure 84 shows this rectified voltage appearing across the headset, both with and without bypass capacitor C_2 connected.

c. The action of the diode as a detector is essentially the same as its action as a rectifier, since the diode actually detects the r-f signal by rectifying it. The circuit shown in figure 83 is the basic detector circuit for many of the radio receivers now in use. However, since the diode does not amplify the signal it is detecting, its use as a detector requires several preceding stages of r-f amplification to bring the level of the signal up to a point of satisfactory output. This is done in modern radio receivers with a large number of tubes. If, however, a radio set is to use a smaller number of tubes, and consequently have fewer stages of amplification, it must have a detector which is more sensitive than the diode; in other words, the detector must *amplify* the signal as well as detect it. The *triode* as a detector fulfills this requirement.

52. Grid-leak Detector

a. The *grid-leak detector* functions like a diode detector followed by a stage of triode amplification. Figure 85 shows only the grid and the cathode of a triode connected as a diode detector; the triode grid acts

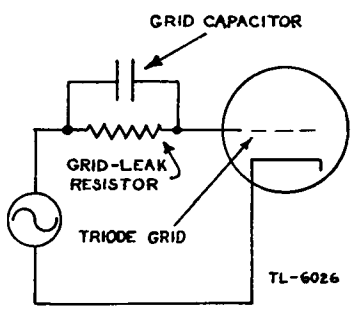

Figure 85. Diode action in a triode.

as the plate of the diode. It can be seen that the grid-leak resistor forms the load for the diode circuit, while the grid capacitor is the r-f bypass, or filter capacitor, in the circuit. When a modulated a-c signal voltage is applied to the circuit of figure 85, current will flow through the tube only on the positive half-cycles, and consequently the signal will be rectified, or detected. Since electrons flow only from the cathode to the "plate" of the diode, the voltage drop across the grid-leak resistor, caused by the current flow on the positive half-cycles, will make the diode "plate" (the triode grid) negative with respect to the cathode. This rectified-signal voltage thus acts as *bias* for the triode grid.

b. Consider next the complete grid-leak detector circuit shown in figure 86. Since the bias for the triode is produced by rectifying the modulated-signal voltage, the bias will increase and decrease in value in proportion to the modulation on the r-f signal (at an a-f rate). In other words, the grid voltage will vary in just the same manner as it did in figure 62, where an a-c voltage was applied to the grid (of a triode) in series with a source of fixed negative grid bias. Since the triode plate current is determined by the grid voltage, the plate current in the circuit shown in figure 86 will vary in proportion to the voltage appearing across the grid-leak resistor. The plate current in this circuit flows through the headset as a load. The voltage drop across

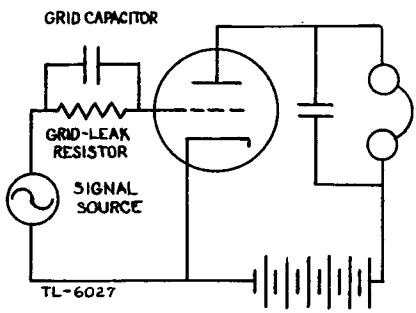

Figure 86. Grid-leak detector circuit.

the headset, produced by the variations in plate-current flow, will therefore be an amplified reproduction of the voltage appearing across the grid-leak resistor. The capacitor connected across the headset in figure 86 bypasses any r-f voltage (amplified by the tube) around the headset. Since the plate current in a circuit decreases as the grid is made more negative, the average plate current of the grid-leak detector circuit will decrease as the applied signal voltage becomes greater. The maximum plate-current flow will occur in this circuit when no signal is being received, because at that time there is no bias voltage developed by the grid leak. Since the actual detection of the signal in the grid-leak detector takes place in the grid circuit, this type of detector is also known as a *grid detector.*

c. The chief disadvantage of the grid-leak detector circuit is that it is easily overloaded by strong r-f signals with consequent distortion of output. When grid-leak detectors are used to handle large r-f signal voltages, they are called *power detectors,* and are sometimes used in radio receivers which have several stages of r-f amplification preceding the detector stage.

53. Plate Detection

a. When the triode-detector circuit is arranged so that rectification of the r-f signal takes place in the plate circuit of the tube, such a circuit is called *plate detection.* If a sufficient negative grid bias is applied to a triode circuit so that the plate-current flow is cut off when no signal is applied, the proper conditions have been established for plate detection. This cut-off bias may be supplied either by means of a cathode resistor, or by means of a fixed source of bias (fig. 87). If a modulated r-f signal is applied to the circuit of figure 87, plate current

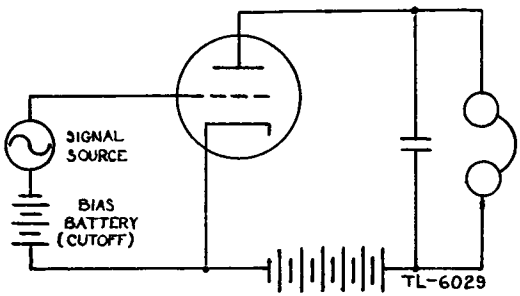

Figure 87. Plate detection.

will flow during the positive half-cycles of the r-f voltage, since the positive voltage will cancel part of the negative bias voltage, thereby reducing the grid voltage below the cut-off point. Plate current will not flow during the negative half-cycles of the r-f voltage, since the negative voltage merely adds to the bias voltage, making the grid more negative. Thus, the tube acts as a plate detector, since plate current flows only during the positive half-cycles of the r-f voltage.

b. The action of the plate detector can be further demonstrated by means of the $E_G - I_P$ curve shown in figure 88. The modulated r-f is applied to the grid-voltage scale of the graph, and the resultant plate-current waveform is developed on the plate-current scale. Since cut-off bias is applied to the plate detector, no plate current will flow when no signal is applied to the circuit. The average value of the plate current will increase as the strength of the applied signal is increased; this effect is opposite to that of the grid-leak detector. In general, the plate detector is less sensitive than the grid-leak detector, but it has the advantage of being less easily overloaded.

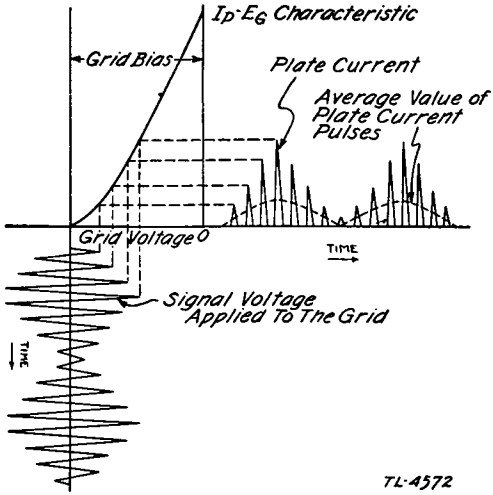

Figure 88. Operating conditions of a plate detector.

54. Regenerative Detection

a. The process of feeding some of the output voltage of a vacuum-tube circuit back into the input circuit, so that it adds to, or reinforces (is in phase with) the input voltage, is known as *regeneration.* The use of regeneration in a circuit greatly increases the amplification of the circuit, since the output voltage fed back into the input circuit adds to the original input voltage, thus increasing the total voltage to be amplified by the tube.

b. Regeneration, sometimes called *positive feedback,* can be applied to a grid-leak detector circuit by connecting a coil in series with the

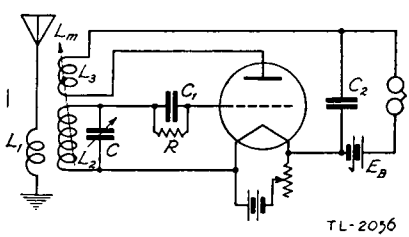

Figure 89. Regenerative detector.

plate circuit and magnetically coupling it to the grid coil (fig. 89). When an r-f signal is applied to the circuit, voltage will be built up across this feedback, or *tickler* coil (L_3 in fig. 89), because of the plate-current variations and the reactance of the coil. Since this tickler coil is magnetically coupled to the grid coil (L_2 on the diagram), transformer action takes place between the two windings and a voltage is set up in the grid coil. Since the tickler coil has been so placed that the voltage it induces into the grid coil will be in phase with the incoming-

signal voltage, the voltage feedback will *add* to the incoming r-f signal voltage and increase the total voltage to be amplified by the tube, thus *increasing the amplification of the circuit.* It is important that the position of the tickler coil with respect to the grid coil be correct, for if it is not and the feedback voltage is out-of-phase with the input voltage, it will cancel some of the input voltage, and thereby reduce the amplification of the circuit. In the circuit diagram of figure 89, the antenna coil L_1, and the grid coil, L_2, form an r-f transformer. Since there are more turns on L_2 than on L_1, the voltage appearing in the antenna circuit will be stepped up by the use of this transformer, thus producing additional gain in the circuit. The secondary of the transformer, L_2, and variable capacitor, C, form the parallel-tuned circuit of the set. C_2 bypasses any r-f currents in the plate circuit around the headset and the plate battery E_B. As is very often the case in Army sets, the filament is heated by means of a battery. The regenerative-detector circuit of figure 89 is the most sensitive triode-detector circuit possible, and when used as a receiver it is capable of receiving signals over extremely long distances under good conditions.

55. C-w Detection

All detector circuits previously discussed are used to detect *modulated* signals, since they separate the audio frequencies from the radio frequencies. All of these detector circuits will also rectify unmodulated, or continuous-wave (c-w) signals, but no a-f voltage will appear in their output circuits, since there is no a-f voltage component present in an unmodulated signal. In order to receive c-w signals from a radiotelegraph transmitter, it is necessary to have some method of producing an a-f voltage in the detector circuit when an unmodulated r-f signal is being received.

56. Heterodyne Detector

a. If two a-c signals of different frequencies are combined, or mixed, in a circuit, a third signal, called a *beat frequency,* will be produced. The frequency of this beat is equal to the difference between the frequencies which are mixed to produce it. Thus, if two a-f voltages are combined, the frequencies of which are 500 and 600 cycles per second respectively, a beat frequency of 100 cycles will be produced.

b. If two r-f signals are combined, the frequencies of which differ by an audio frequency, a beat frequency of an a-f voltage will be produced. For example, if a 1,000-kilocycle signal is mixed with a 1,001-kilocycle signal, a beat, with a frequency of 1 kilocycle (1,000 cycles, or an audio frequency), will be produced. If some way can be found of generating a signal in a detector circuit, the frequency of which differs from the frequency of the incoming signal by an audio-frequency amount, then an a-f voltage will be produced in the circuit.

This can be done by making the regenerative-detector circuit oscillate. If the regeneration, or positive feedback, in a regenerative-detector circuit is increased beyond a certain critical point, the circuit will oscillate, or produce an alternating current, the frequency of which is equal to the resonant frequency of its tuned circuits. Thus, by making the regenerative detector an oscillating detector, and tuning it so that the frequency it generates will differ from the incoming r-f signal frequency by an audible amount, it is possible to detect unmodulated r-f signals. This process is known as "heterodyning," and an oscillating detector is called a *heterodyne detector.* The heterodyne principle is used in radio receivers whenever c-w reception is desired. It is also the basis for most of the oscillator circuits used in transmitters and receivers.

57. Vacuum-tube Voltmeter

a. The plate-detector circuit, discussed in paragraph 53, is used as the basis for a very important measuring device in radio: the *vacuum-tube voltmeter.* A circuit diagram of the vacuum-tube voltmeter is shown in figure 90, and its similarity to the plate-detector circuit will

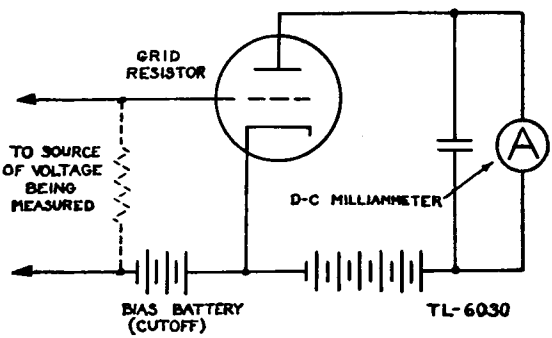

Figure 90. Vacuum-tube voltmeter.

be obvious. When no voltage is applied to the grid of this circuit, no plate current will flow, since the grid is biased to cut-off. If an a-c voltage is applied to the grid, however, plate current proportional to the peak (or highest value of the applied voltage) will flow, and operate the milliammeter (which replaces the headset of the plate-detector circuit). If a d-c voltage is applied, the plate current indicated by the milliammeter will be proportional to the applied voltage, provided that the positive terminal of the voltage being measured is connected to the grid, and the negative terminal is connected to the bias battery.

b. By calibrating the milliammeter so that it reads either a-c volts or d-c volts, or both, the circuit becomes an effective voltage-measuring device. The advantage of the vacuum-tube voltmeter is that it draws little or no current from the source of voltage being measured. This is in contrast to conventional meters, and thus gives far more accurate results when critical measurements are being made.

SECTION VI

VACUUM-TUBE AMPLIFIERS

58. Voltage and Power Amplifiers

a. The basic manner in which a signal can be amplified by a vacuum tube (par. 37) can be applied to vacuum-tube amplifiers which fulfill various special requirements of transmitters and receivers. The importance of amplifier circuits can be seen from their wide variety of uses in radio work.

(1) In transmitters, the r-f power generated by the oscillator is too small for satisfactory long-distance transmission; therefore, *r-f power-amplifier* stages are used to increase this power to the desired level before transmitting.

(2) The a-f voltage output of a microphone is too small to operate the modulator stage of a radiotelephone transmitter; therefore, *a-f voltage-amplifier* stages are used to increase the output of the microphone to the amount required for proper operation of the modulator.

(3) *R-f voltage-amplifier* circuits are used in receivers to increase the strength of weak signals, so that satisfactory detector operation may be realized.

(4) A-f voltage-amplifier stages are also used in receiver to amplify the a-f output of the detector stage for greater headset volume.

(5) If loudspeaker operation is required in a set, the output a-f amplifier stage will be an *a-f power amplifier.*

b. From this discussion of amplifier circuits, it may be concluded that a vacuum-tube amplifier stage, either r-f or a-f, can be classified as a voltage amplifier or a power amplifier, according to the purpose for which it is to be used.

c. Voltage amplifiers are amplifier stages designed to produce a large value of amplified-signal voltage across a load in the plate circuit. In order to produce the largest possible value of amplified-signal voltage across the load of such a circuit, the opposition of the load to plate-current change (that is, its resistance, reactance, or impedance) must be as high as is practically possible.

d. Power amplifiers are amplifier stages designed to deliver a large amount of power to the load in the plate circuit. In a power amplifier, not only must there be a large output voltage across the load, but there must also be current flowing through the load, since power equals voltage times current.

e. Voltage and power amplifiers can be recognized by the characteristics of their plate-circuit elements. Thus, an amplifier stage designed to produce a large amplified-signal voltage across a high impedance is a voltage amplifier, while one designed to deliver a relatively large plate-current flow through a load of lower impedance is a power amplifier. Although any vacuum tube may be operated as either a voltage or power amplifier, certain tubes have been developed which serve best as voltage amplifiers, while others have been designed for use as power amplifiers. These are referred to as *voltage-amplifier tubes* and *power-amplifier tubes,* respectively.

f. In addition to the two general types of amplifiers just discussed, there is a further classification of both voltage and power amplifiers. The operation of all vacuum-tube amplifiers may be classified according to the bias voltage applied to their grids, and according to that portion of the a-c signal-voltage cycle *during which plate current flows.* These types of amplification are designated as *class A, class AB, class B,* and *class C.*

59. Class A Amplification

a. If the grid of an amplifier tube is biased so that plate current will flow during the entire cycle of the applied a-c signal voltage, the circuit is called a *class A amplifier.* The class A operation of a tube is illustrated graphically by the grid-voltage plate-current curve of

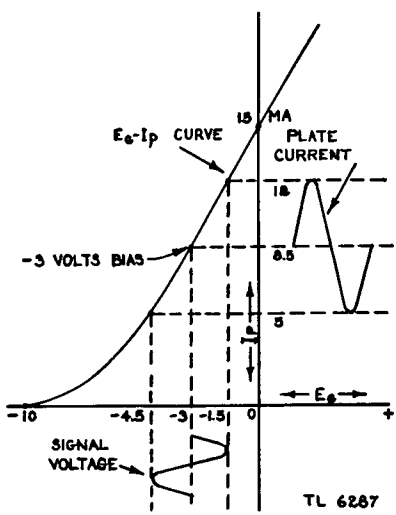

Figure 91. Class A operation.

figure 91. An examination of this graph will show that plate current flows during both the positive and negative half-cycles of the a-c signal voltage applied to the grid. Notice that the $E_G - I_P$ curve of figure 91

is not linear over its entire length, that is, it is not a straight line. In order to produce a plate-current waveform which, as nearly as possible, is an exact reproduction of the signal-voltage waveform, the tube must be biased so that it will operate on that portion of its $E_G - I_P$ curve (fig. 91) which is a straight line.

b. If the grid of the tube is biased incorrectly, so that the grid voltage varies over a nonlinear portion of the curve, a distorted plate-current waveform will result (fig. 92). Since the plate current varia-

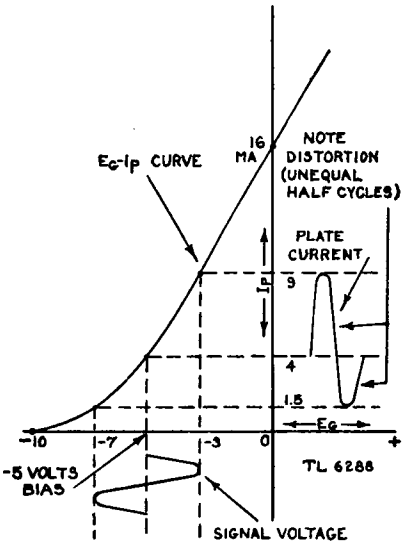

Figure 92. Distortion in a class A amplifier due to improper bias.

tions flowing through the load produce the output voltage in an amplifier circuit, a distorted plate-current waveform will produce a distorted output voltage. It is important, therefore, that the bias voltage be kept at the proper value in class A amplifier stages, in order to avoid distortion.

c. Distortion will also occur in a class A amplifier if too great a value of a-c signal voltage is applied to the grid of the tube, and the total grid voltage (the bias voltage plus or minus the signal voltage) will vary over both linear and nonlinear portions of the $E_G - I_P$ curve (fig. 93).

d. The maximum power output which can be obtained from any amplifier stage will depend on the efficiency of the circuit and the permissible plate-dissipation rating of the particular plate used. The efficiency of an amplifier stage is the ratio of the power output (the power of the signal frequency available at the load) to the plate-power input (the d-c plate voltage times plate current), expressed in percent. For example, if the plate-power input to an amplifier stage is 40

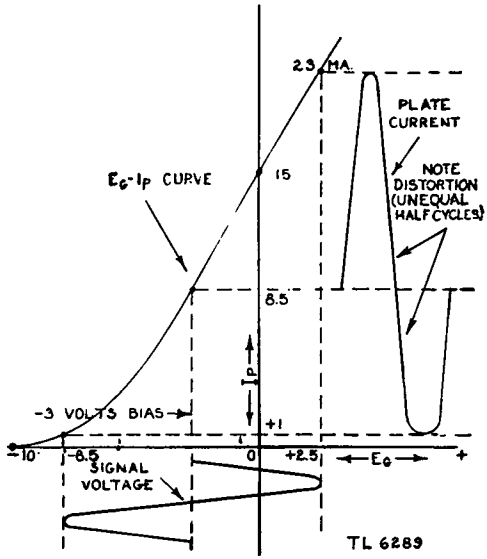

Figure 93. Distortion in a class A amplifier due to excessive signal voltage.

watts, and the power output of the stage is 10 watts, the efficiency of the amplifier stage is 25 percent. The plate dissipation or the power consumed by the plate circuit, of an amplifier stage is the difference between the power input and the power output. Thus, in the example above, the plate dissipation would be the difference between 40 watts and 10 watts, or 30 watts. Each type of tube is rated by the manufacturer as to its maximum safe plate dissipation; this value cannot be exceeded without damaging the tube. The efficiency of class A amplifier stages generally is about 20 to 25 percent.

e. Practically all the amplifier stages of radio receivers, both r-f and a-f are class A operated. Also, the speech-amplifier stages of radiotelephone transmitters (audio stages used to amplify the a-f output of the microphone to the proper signal-input level for the modulator) are class A amplifiers.

60. Class B Amplification

a. If the grid of an amplifier tube is biased at cut-off, so that plate current will flow only during the positive half-cycles of the applied a-c signal voltage, the circuit is called a *class B amplifier.* The $E_G - I_P$ curve in figure 94 demonstrates the relation between grid voltage and plate current in a tube, operated class B. From figure 94, it can be seen that plate current flows only during the positive half-cycles of the a-c signal voltage applied to the grid, and consequently the plate-current waveform is not a replica of the signal-voltage waveform.

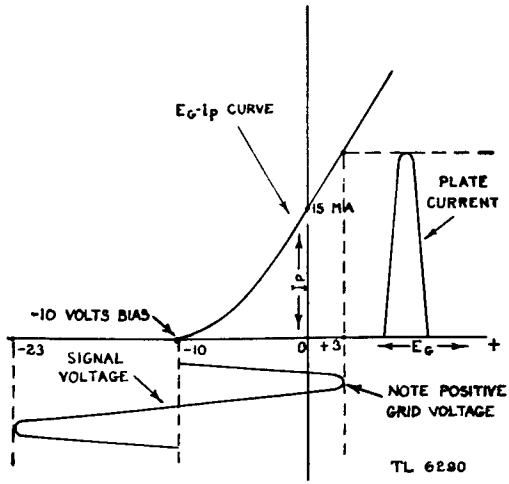

Figure 94. Class B operation.

b. The signal voltage applied to the grid of a class B amplifier is usually much greater in value than that applied to the grid of a class A stage. In fact, the applied signal voltage may be so large that, during part of the positive half-cycles, the grid is actually operated at a positive voltage with respect to the cathode (fig. 94). Since the grid is positive with respect to the cathode during the positive peaks of the applied signal voltage, some of the electrons will be attracted to the grid, and therefore grid current will flow.

c. In order to avoid the large amount of distortion present in the output of a single-tube, or single-ended, class B amplifier stage, two tubes can be arranged in a push-pull amplifier circuit. (See fig. 95.) One tube will operate during the first half-cycle of the a-c signal voltage, and the other tube will operate during the second half-cycle. The action of the push-pull grid circuit in figure 95 is similar to that of the full-wave rectifier circuit. Since plate current flows during one half-cycle in one tube, and during the next half-cycle in the other,

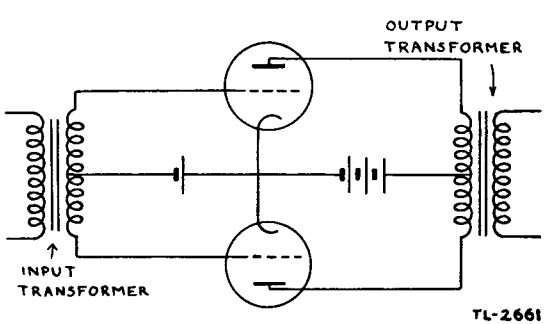

Figure 95. Push-pull amplifier circuit.

the plate current waveforms of the two tubes can be combined in the load circuit. The load circuit in figure 95 is the center-tapped primary of a push-pull output transformer. Since the plate currents of these two tubes flow in opposite directions through their respective halves of the transformer winding, one tube will generate a voltage across the transformer primary during one half-cycle. During the next half-cycle, the other tube will generate a voltage of opposite polarity across the winding. Figure 96 shows the voltage developed across the trans-

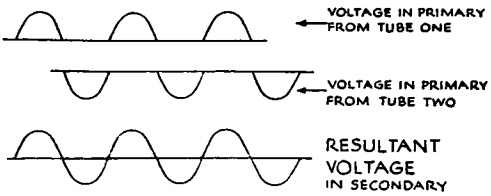

Figure 96. Output of a push-pull class B amplifier.

former primary winding by each tube and the resultant voltage across the transformer secondary, due to combining the voltages over the complete signal voltage cycle. Thus, by using two tubes in push-pull, it is possible to obtain a reasonable undistorted output voltage from a class B amplifier.

d. Class B amplifiers have an efficiency of about 50 to 60 percent, which means a reduced value of plate dissipation and an increased power output for a given power input. They are generally used where it is desired to develop a relatively large power output in the load circuit. Single-tube class B amplifiers are never used for a-f amplification, because of the distorted output of a single tube. Push-pull, class B, a-f amplifier circuits are, however, widely used in the modulator stages of radiotelephone transmitters. They are also occasionally used in the power-output stages of radio receivers.

e. Although the single-ended, or single-tube, class B amplifier is never used in a-f amplifier circuits, it can be used successfully in r-f amplifier stages having a parallel-tuned circuit as the plate load. The parallel-tuned circuit is sometimes called a *tank circuit,* because it has the ability to store power. When it is used as the plate load of a single-ended, class B amplifier stage, the capacitor in the parallel-tuned circuit will be charged by the output voltage produced by the flow of plate current through the load on the positive half-cycles. Although no current flows through the tube on the negative half-cycles of the applied signal voltage, the capacitor will discharge into the inductor during this period, and thus supply the missing half-cycle in the output voltage. This so-called flywheel effect of the tank circuit will occur only when the resonant frequency of the parallel-tuned

circuit is equal to the frequency of the applied signal voltage. Both single-ended and push-pull class B r-f amplifiers are used in the r-f stages of radio transmitters.

61. Class AB Amplification

a. It is possible to compromise between the *fidelity* (low distortion) of class A amplification and the relatively high efficiency of class B operation by biasing the amplifier circuit so that it will operate part way between class A and class B. This is known as class AB amplification.

b. In biasing a tube part way between class A and class B, the tube will not operate over the entire linear portion of its $E_G - I_P$ curve, and therefore some distortion will be present in the output. For this reason, push-pull amplifier circuits are generally used for class AB a-f amplifiers. Because class AB amplification is less efficient than either class B or class C amplification, it is seldom used in r-f amplifier circuits.

c. If the a-c signal voltage applied to a class AB amplifier is kept below the point where grid current flows, the resultant operation is called *class AB_1 amplification.* If the applied signal voltage is great enough to cause grid current to flow during the positive peaks of the signal voltage cycle, the resultant operation is called *class AB_2 amplification.*

62. Class C Amplification

a. If the bias applied to the grid of an amplifier stage is appreciably greater than the cut-off value, the amplification is called *class C.* The operation of such a tube is shown by the $E_G - I_P$ curve in figure 97. Note that in this case the bias voltage is 20 volts, or twice the cut-off

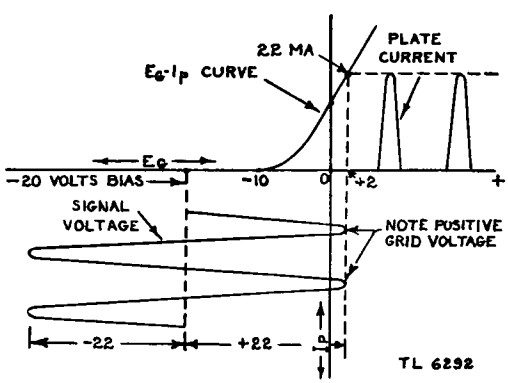

Figure 97. Class C operation.

value; the use of twice the cut-off bias is common practice in many class C amplifiers. The curve shows that plate current will flow only

during that portion of the positive half-cycle of the applied a-c signal voltage, which is numerically greater than the cut-off bias for the tube; that is, plate current flows only during the positive peaks of the applied signal voltage. The curve also shows that the applied a-c signal voltage must greatly exceed the cut-off bias in order to produce a large value of plate-current flow.

b. Almost all of the r-f amplifier circuits used in radio transmitters are operated class C. The parallel-tuned circuits used as plate loads for class C amplifiers exhibit the same flywheel effect as for class B amplifiers. The advantage of class C operation is that it has a high efficiency; efficiencies as high as 75 percent are not uncommon in class C r-f amplifiers. Class C operation is never used in a-f amplifiers because of the high degree of distortion in these circuits.

63. Interstage Coupling

a. Any of the coupling methods, described in paragraphs 27 to 30, may be used to couple the output circuit of one amplifier stage to the input circuit of the next stage. Three types of interstage coupling are shown in the circuit of figure 98. In this circuit, the elements Z_1 are the plate loads for their respective tubes, cathode bias (R_c) is used

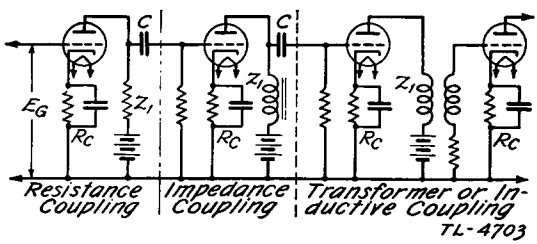

Figure 98. Three types of interstage coupling.

for all four tubes, and the input a-c signal voltage is indicated by E_G. All three of these forms of interstage coupling are widely used in the a-f circuits of both transmitters and receivers. The most common form of coupling found in the r-f amplifier circuits of receivers is transformer coupling, while in the r-f circuits of transmitters, both impedance and transformer coupling are widely used.

b. The first stage of the circuit in figure 98 is resistance-coupled to the second stage, since the amplified-signal voltage is developed across a resistor in the plate circuit. This signal voltage is applied to the grid of the second stage through the blocking capacitor (sometimes called a coupling capacitor), indicated as capacitor C on the drawing. The resistor in the grid circuit of the second stage provides a d-c path for the bias applied to the grid. Since the blocking capacitor plays an important part in the operation of this circuit, this type of coupling is sometimes called *resistance-capacitance coupling.* As the

blocking capacitor will pass alternating current, it applies the amplified-signal voltage developed across resistor Z_1 to the grid circuit of the next stage. At the same time it blocks the flow of direct current from the plate circuit of the first stage to the grid circuit of the second. If this capacitor should break down or develop leakage, some or all of the positive d-c voltage applied to the plate of the first stage would appear on the grid of the second, canceling some or all of the negative bias applied to this tube, and thus causing distortion in its output. A leaky blocking capacitor, therefore, can be a source of distortion in an amplifier circuit.

c. The coupling between the plate circuit of the second tube and the grid circuit of the third tube (fig. 98) is similar in operation to the coupling between the first and second tubes, except that an inductor having a high value of reactance at the signal frequency is used as a plate load. The function of the blocking capacitor is the same for both resistance and impedance, or inductance, coupling.

d. A transformer is used to couple the output of the third tube to the input of the fourth in the circuit of figure 98. The primary of this transformer is the plate load for the third tube, while the signal voltage applied to the grid of the fourth tube is developed across the secondary of this transformer. If the transformer has more turns on the secondary than on the primary, the signal voltage applied to the grid of the fourth tube will be proportionately greater than the signal voltage developed across its primary. Thus, some voltage amplification is obtained by the use of transformer coupling in amplifier circuits.

e. In general, the only difference between the coupling methods used in a-f amplifier circuits and those used in r-f amplifier circuits lies in the employment of tuned circuits. The circuit of figure 99 shows a tuned impedance-coupled r-f amplifier circuit; the plate loads for the two

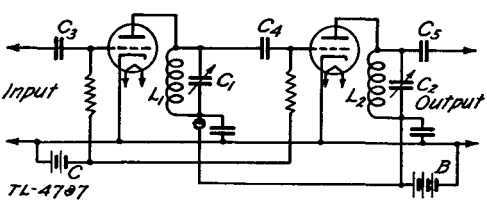

Figure 99. Tuned impedance-coupled r-f amplifier circuit.

tubes are the parallel-tuned circuits formed by L_1 and C_1, and L_2 and C_2, respectively. A two-stage, single-tuned, transformer-coupled, r-f amplifier circuit is shown in figure 100; this circuit is typical of those found in most radio receivers. Figure 101 shows the use of double-tuned transformer coupling between two stages of r-f amplification. This circuit has the advantage of providing high selectivity and high gain (amplification) at the frequency to which it is tuned. It should

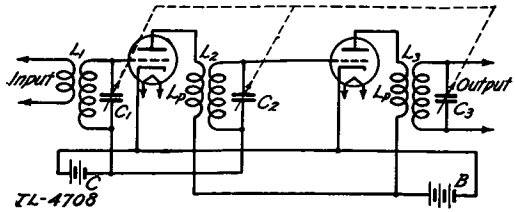

Figure 100. Tuned transformer coupled r-f amplifier circuit.

be noted in the circuits of figures 99, 100, and 101 that batteries common to two stages have been used to provide both negative grid bias and positive plate voltage for the tubes.

f. One of the main considerations in the transformer coupling of a-f power amplifiers is that very little or no distortion should occur. The use of the push-pull circuit greatly reduces distortion in a-f amplifier circuits. For this reason, push-pull is widely used in the a-f power amplifier circuits of radio transmitters and receivers. In class A am-

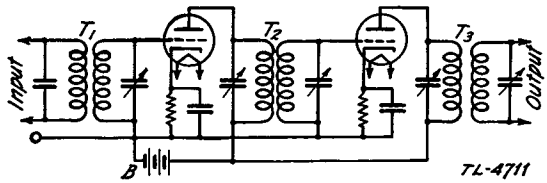

Figure 101. Double-tuned transformer-coupled r-f amplifier circuit.

plifiers, the use of the push-pull circuit permits the application of considerably higher signal voltage per tube for a given amount of distortion in the output than would be possible in single-ended amplifiers. The use of the push-pull circuit is required in classes AB and B a-f amplifiers for low distortion in the output voltage. A center-tapped transformer is the most convenient means of supplying two voltages which are equal to and out of phase with the two grids of a push-pull amplifier circuit from a single-ended stage. Transformer coupling is therefore more widely used than any other method for this purpose.

g. In class AB_2 and class B a-f amplifier circuits, there is another and more important requirement, which necessitates the use of transformer coupling. Most of the tubes intended for use as power amplifiers are so designed that their grids may be operated at a positive voltage in push-pull amplifier circuit without undue distortion. If a positive voltage is applied to its grid, a tube will draw a certain amount of grid current, since some of the electrons will be drawn to the grid. If the grid circuit of a tube drawing grid current contains a large value of d-c resistance, the grid current flowing through this resistance will produce a bias voltage, because of the grid-leak action of the resistance. Since this voltage would be applied to the grid in addition

to whatever value of bias is applied in the circuit, it would change the operating characteristic of the circuit, reduce the power output, and cause distortion. Both class AB_2 and class B a-f amplifier circuits are usually operated so that they will draw grid current when large signal voltages are applied. The d-c resistance of the grid circuit of such amplifiers must, therefore, be kept small in order to prevent the development of undesired additional bias voltages. The low d-c resistance of the windings of a transformer satisfies this requirement. Accordingly, transformer coupling is always used for class AB_2 and class B operation in a-f power amplifier circuits.

h. If the grids of an amplifier stage draw current, they will require a certain amount of power from the signal source. In order to obtain the maximum transfer of power from the plate circuit of the preceding stage, usually called the *driver stage,* the output impedance of this stage must be matched to the input impedance of the push-pull amplifier circuit. This requirement is most conveniently and efficiently met in this type of a-f amplifier by the use of transformer coupling.

64. Gain Control in r-f Amplifiers

a. It was shown earlier (par. 37e) that the gain, or amplification, of a triode may be conveniently controlled by varying the bias voltage applied to its grid. This method of gain control is used more frequently in r-f amplifier circuits than any other method.

b. For *manual control* of the gain of an r-f amplifier, the cathode-bias resistance often is formed by a fixed resistor and a variable resistor connected in series. The fixed resistor is of the correct value to bias the tube for its maximum amplification. The variable resistor may be set at any value from zero to that resistance required for cut-off bias. This provides a convenient method of adjusting the gain of the circuit to any desired value.

c. For *automatic volume control,* additional negative grid bias may be supplied to the r-f amplifier stages of a receiver from the diode-load resistor in the detector circuit. The negative voltage developed across this resistor will be proportional to the signal voltage applied to the detector by the r-f amplifier. The additional negative grid bias applied to the r-f amplifier tubes thus will tend to keep the level of the signal applied to the detector, and consequently the detector output, at a constant value. The circuits and application of automatic volume control are discussed in detail in the sections on radio receivers.

65. Gain Control in a-f Amplifiers

a. The most popular method of volume control for a-f circuits is the use of a potentiometer as the grid resistor of a vacuum-tube amplifier (fig. 102). Since the signal voltage is applied across this variable

resistor, the position of the variable arm of the resistor will determine the value of the signal voltage applied to the grid, and consequently the output of the amplifier.

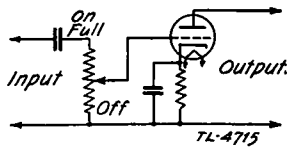

Figure 102. Simple volume-control circuit.

b. Automatic volume control is seldom applied to a-f amplifier circuits, as it is generally more convenient to control the gain of a radio set in the r-f amplifier circuits which precede the detector.

66. Distortion

a. Distortion in an amplifier may be broadly classified under three headings: frequency distortion, nonlinear distortion, and delay (or phase) distortion. Frequency distortion arises because of the inability of an amplifier to amplify all frequencies equally. Nonlinear distortion is a consquence of operating over a curved (nonlinear) portion of a tube's characteristic, so that harmonic or multiple frequencies are introduced. Delay distortion results from the effects of transmission of different frequencies at different speeds, giving a relative phase shift over the frequency spectrum in the output. Except at the ultra-high frequencies or in transmission line work, the effects of delay distortion are usually insignificant. Frequency distortion in r-f transmitter amplifiers is ordinarily of little concern, since these amplifiers operate over only a relatively narrow range of frequencies at any one time.

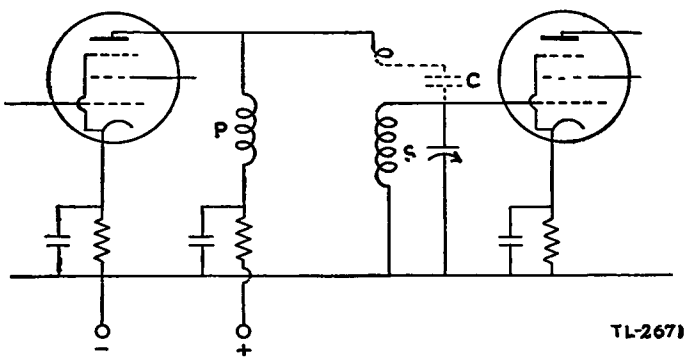

Figure 103. Special circuit arrangement in an r-f amplifier to provide uniform response over a band of frequencies.

b. In r-f receiver amplifiers, various compensating devices are sometimes employed to provide uniform response to a band of frequencies.

Figure 103 illustrates one such compensating arrangement. A high-inductance primary winding *P*, loosely coupled to the secondary *S*, resonates (due to self-capacitance) at a lower frequency than the lowest for which the amplifier is to operate. This gives high gain at the low end of the band because of the high plate-load impedance at the lower frequencies. The small capacitance *C*, due to a loop of wire hooked around the top of the secondary, provides increased coupling at the higher frequencies to improve the response at the upper end of the band.

c. Distortion, which arises from operating a vacuum tube over a nonlinear portion of its characteristic, consists principally of multiple frequencies (harmonics) and of sum-and-difference frequencies corresponding to each frequency present in the original signal. Suppose, for instance, that the input signal to a non-linear r-f amplifier is composed of three frequencies: 500,000; 501,000; and 501,025 cycles. The output then contains, in addition to the three original frequencies, the following distortion frequencies:

(1) Harmonics: 1,000,000; 1,500,000
1,002,000; 1,503,000
1,002,050; 1,503,075
(2) Sum frequencies: 1,001,000; 1,001,025; 1,002,025.
(3) Difference frequencies: 1,000; 1,025; 25.

d. The filtering action of a parallel-resonant circuit in an amplifier plate circuit which is tuned to about 500,000 cycles minimizes the effects of all these distortion components. The extent of this suppression of the distortion frequency components may be controlled by proper design of the tuned circuit. At frequencies well off resonance, the parallel circuit offers essentially the impedance of the lowest impedance branch. In a circuit tuned to 500,000 cycles, the impedance offered to currents of 1,000,000 cycles is practically that of the capacitor alone, and the impedance offered to currents of 1,000 cycles is practically that of the inductor alone. Thus a low *L* to *C* ratio minimizes the voltages developed across the parallel circuit at the distortion frequencies. Link coupling (fig. 104) is sometimes used to transfer energy between two tuned circuits. This avoids incidental coupling between the two circuits due to the distributed capacitance of the turns and also avoids the transfer of harmonics from one circuit to the other.

e. In an a-f amplifier the distortion frequencies generally overlap components of the desired signal frequencies, so that filtering is not feasible. In a-f amplifiers, the problem demands prevention rather than cure. Class A operation is one solution. Push-pull arrangements are of further assistance.

f. Of the harmonic frequencies, the second (first overtone) is usually the predominant one. The rest are ordinarily weak. It is the objection-

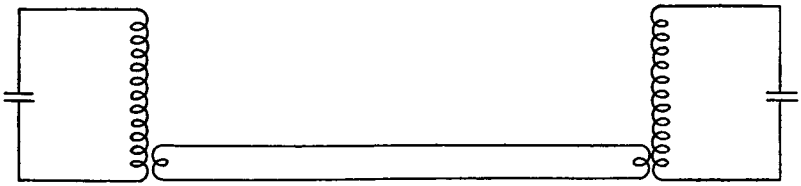

TL-2672

Figure 104. Link-coupled tuned circuits.

able second harmonic (as well as all other even-order harmonics) which is absent in the output of a push-pull amplifier. That this is the case may be seen from a consideration of the curves of figure 105. Here ① represents a fundamental signal frequency (first harmonic); ② and ③ are multiple-frequency curves, second and third harmonics of the signal, respectively. The solid curve of ④ is obtained by adding the fundamental ① and the second harmonic ②. The solid curve of ⑤ is

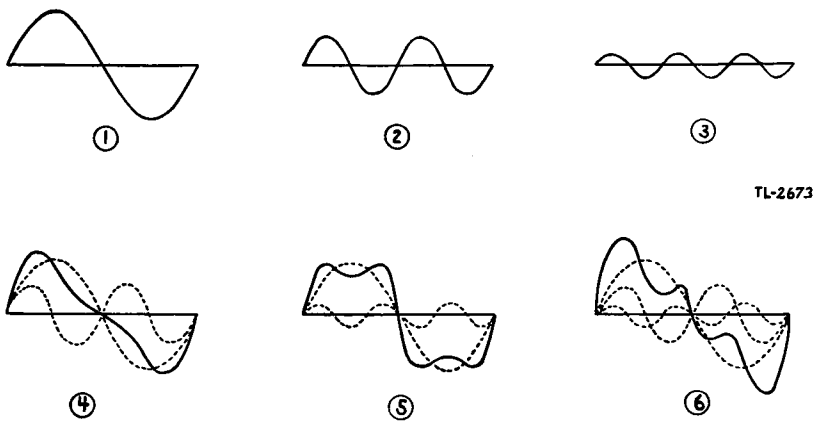

① *Fundamental.*
② *Second harmonic.*
③ *Third harmonic.*
④ *Fundamental plus second harmonic.*
⑤ *Fundamental plus third harmonic.*
⑥ *Fundamental plus second and third harmonics.*
Figure 105. Analysis of harmonic distortion.

obtained by adding the fundamental ① and the third harmonic ③. Fundamental, second harmonic, and third harmonic are compounded to yield the solid curve of ⑥. The resultant in ⑤ is such that if the negative half-cycle of the curve is shifted along the abscissa (horizontal axis), so as to be directly below the positive half-cycle, the negative half-cycle then presents a mirror image of the positive half-cycle about the abscissa. It can be shown that any combination of odd-order harmonics possesses this same symmetry; further, that any resultant wave formed by a combination of harmonics and possessing this symmetry

cannot contain any even-order harmonic elements. In push-pull action two tubes interchange roles during alternate half-cycles, so that if the dashed curve of figure 106 represents the output of one tube, the dotted curve of the same figure represents the output of the companion tube. Dissymmetry in the output waveform of each individual tube indicates definite even-order harmonic content, whereas symmetry of the combined waveform shows complete absence of any even-order harmonics.

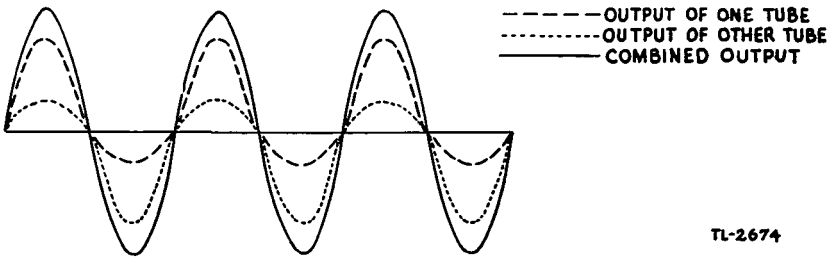

Figure 106. Waveforms in a push-pull amplifier.

g. Push-pull operation serves to lessen distortion in other ways.

(1) The direct currents present in the two halves of the output transformer primary balance each other in their magnetic effects, so that the core cannot become saturated with direct current. (Saturation is a state of magnetization of the core which results from reasonably large currents, so that further increase in current produces only a small increase in magnetic induction.)

(2) Alternating-current components of plate-supply potential, which are due to incomplete filtering, produce no effect in the output transformer secondary, since the potentials thus developed across the primary balance each other. Because of the difficulty of obtaining perfect balance, particularly in tubes, the full possibilities of push-pull amplifiers are seldom realized in practice. However, under conditions of moderately good balance, the push-pull amplifier offers a definite improvement in quality over a comparable single-ended amplifier.

h. For doubling the frequency at radio frequencies in a transmitter, with a single-ended amplifier operating into an appropriately tuned *LC* circuit, harmonic distortion within the tube is deliberately encouraged.

SECTION VII

TUNED RADIO-FREQUENCY RECEIVER

67. Principle of t-r-f Receiver

The *tuned radio-frequency receiver,* or, as it is more commonly called, the *t-r-f receiver,* consists of one or more stages of r-f amplification, a detector stage, and one or more stages of a-f amplification. A block diagram of a typical t-r-f receiver is shown in figure 107. Radio energy waves from a distant transmitter cause a r-f signal current to

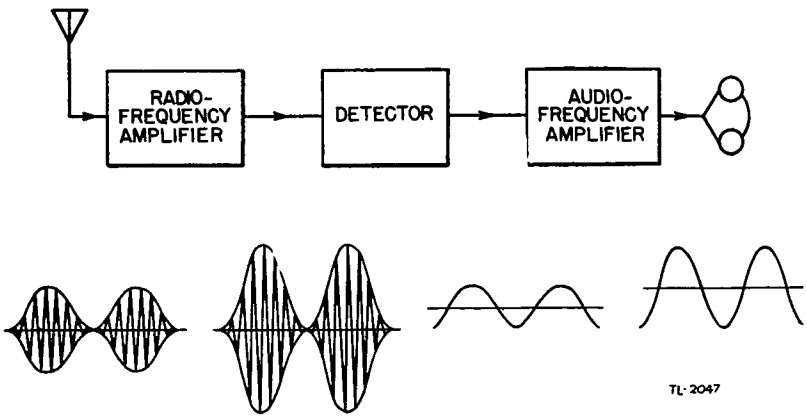

Figure 107. Block diagram of a t-r-f receiver, showing the signal passing through the receiver.

flow in the receiving antenna. This r-f signal is amplified by the r-f amplifier stages, and is then detected, or demodulated, by the detector. The resulting a-f output from the detector stage is amplified by the a-f amplifier stages, and the audible sound is heard in either a loudspeaker or earphones. The waveforms below the block diagram of figure 107 give a comparative indication of this process of converting r-f signals into intelligible a-f signals.

68. R-f Amplifiers

a. Tuned r-f amplifier stages increase the selectivity and the sensitivity of the t-r-f receiver. The more stages that are used the greater will be this increase. Important aspects of the r-f amplifier to be considered are the types of tubes, r-f transformers, capacitors, and

resistors employed, and the nature of band spread and special decoupling circuits.

b. The tubes generally used in r-f amplifiers are tetrodes and pentodes. Any tube suitable for voltage amplification may be used. Triodes, which were used at one time, are not as satisfactory because they have a strong tendency to cause undesirable oscillations in r-f amplifier stages. They also require very careful neutralization (adjustment) to prevent feedback from stage to stage.

c. The basic circuit of a pentode class A t-r-f amplifier is shown in figure 108. The tuned circuit L_1C_1 is coupled to coil L, which in this case is the antenna coil, but could be the plate coil of a preceding stage. Resistor R_1 and capacitor C_2 are the cathode bias resistor and cathode bypass capacitor. Capacitor C_3 is the screen bypass capacitor and R_2

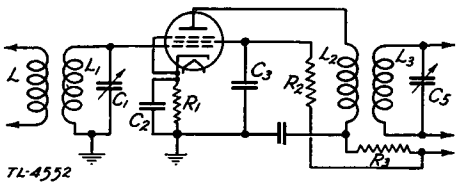

Figure 108. R-f stage of a t-r-f receiver.

is the screen voltage-dropping resistor. A second tuned circuit, L_3C_5, is coupled to coil L_2. Coils L and L_1 form the primary and secondary windings, respectively, of an r-f transformer. Coils L_2 and L_3 also form an r-f transformer.

d. The r-f transformer used in most t-r-f receivers consists of a primary coil and a secondary coil. The secondary coil L_1 is designed to cover the desired frequency range when tuned by the tuning capacitor C_1 connected across the secondary. Most r-f transformers in use at the present time are of the air-core type. A few special types may be found which use powdered-iron cores when the frequency of operation is not too high. If a receiver is required to cover a greater frequency range than one coil and tuning capacitor will provide, the tuning circuits of the receiver must be changed to tune to these additional frequency bands. One system is to use plug-in coils, which may be changed to provide the different tuning ranges required. Another system is to mount the various coils for the different frequencies in the receiver, and bring the leads out to a multi-contact rotary switch. This is called *band switching,* and by turning the switch, any desired band can be selected. In both methods the same tuning capacitors are used for all tuning ranges. Both systems of band changing are widely used in Signal Corps receivers.

e. Most t-r-f receivers use two or three r-f stages preceding the detector, with each stage tuned to the same frequency. It is therefore more convenient to have all of the tuning capacitors mounted on a

common shaft, so that all stages can be tuned simultaneously. These are called *ganged variable capacitors.* In a receiver having two r-f stages, a three-gang capacitor would be used, with one of its sections tuning each of the three tuned circuits in the receiver. When these tuning circuits are ganged, the coils and the capacitors must be identical. This is necessary in order that all the circuits will tune to the same frequency for any dial setting. Inaccuracies of the coils and capacitors, and stray circuit capacitances will prevent the circuits from tuning to the same frequency. Thus, there must be some method of compensating for these irregularities. This is provided by connecting small trimmer capacitors across each tuning capacitor. These trimmers are adjusted with a screw driver or small wrench, so that each circuit may be tuned exactly to the signal frequency. This process is known as *alignment.* In practice, these capacitors are adjusted at the h-f end of the dial, where the plates of the tuning capacitors are meshed very little and their capacitances are small. The circuits will now be properly adjusted at one dial setting, but they may not tune to identical frequencies at other dial settings. In some sets, this is corrected by slotting the end rotor plates of the tuning capacitors, so that any portion of the end plates may be bent closer to or farther away from the stator plates. When all of the stages tune to identical frequencies at all dial settings they are said to be *tracking,* and maximum gain will be obtained from the receiver. In receivers using band changing, the trimmers for each range are usually mounted on the individual coils. In receivers covering only one band, the trimmers are usually located on the ganged capacitors, one for each section.

f. Resistors used in the r-f amplifier and in the detector circuits are practically all of the small carbon type. The wattage rating will depend upon the voltage drop in the resistor and the current through it.

g. Band spread is the process of spreading out a small section of the tuning range of a receiver over the entire scale of a separate tuning dial. The purpose of band spread is to assist in separating stations crowded together in a small space on the main tuning dial. There are two types of band spread: *electrical* and *mechanical.*

(1) In electrical band spread, a small variable capacitor is connected in parallel with the main tuning capacitor in the tuned circuit. The tuning range of the *band-spread capacitor* is only a fraction of the

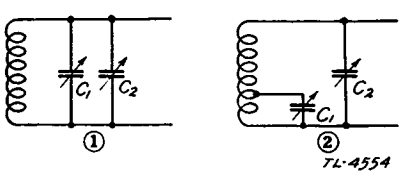

① *Parallel capacitor band spread.* ② *Tapped-coil band spread.*
Figure 109. Two types of electrical band spread.

range of the main tuning capacitor. To increase the amount of band spread, the small capacitor may be tapped down on the coil, so that it tunes only a small portion of the coil. Figure 109 shows two methods of electrical band spread.

(2) In mechanical band spread, the band-spread dial is geared to the main tuning dial, so that one complete rotation of the band-spread dial moves the main tuning dial and capacitor over only a fraction of its range.

h. When several amplifier stages are operated from a *common* plate supply, there is a possibility of undesirable oscillations being set up because the plate circuits of the various stages are coupled together by the common impedance of the plate supply. (See fig. 110①.) Note that the plate voltage of both tubes is obtained from a common *B*, or plate, supply. The *internal* resistance of this common supply is represented by *R*. Any change of plate-current flow in tube 2, such as a signal current, will cause a change of voltage across *R*. This causes a

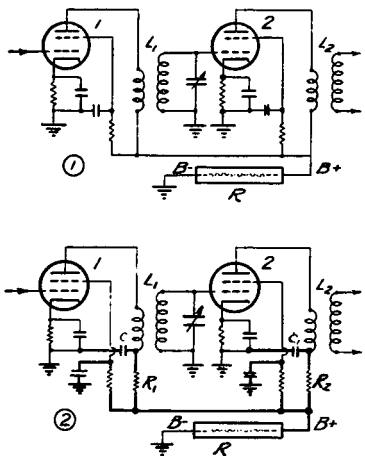

Figure 110. R-f amplifer, without and with decoupling circuit.

change of the *B* supply voltage to the plate of tube 1, and induces a voltage in L_1, which is connected to the grid circuit of tube 2. This tube will amplify the change and it will appear across L_2 as a larger change. Thus, it can be seen that a part of a signal from the plate of tube 2 is fed back to the grid circuit of the same tube. This condition may cause unwanted oscillations. Circuits to prevent this condition are called *decoupling circuits,* and shown in figure 110②. The capacitors C and C_1, together with resistors R_1 and R_2, make up the decoupling circuit. The resistors R_1 and R_2 offer a high impedance to the signal voltage, while the capacitors C and C_1 bypass the signal voltage around the B supply. A choke coil may be used instead of the resistors R_1 and R_2. The bypass capacitors for the cathode, screen-grid, and plate

circuits in t-r-f receivers are usually paper capacitors, except in circuits intended to operate on extremely high frequencies and in receivers designed for special applications, such as aircraft receivers. In most Signal Corps receivers, the paper capacitors are inclosed in metal cases, two or three capacitors often being grouped together in one can. Where one connection to each capacitor is connected to ground in the circuit, the metal can itself is often the *common-ground* terminal. In some cases, a single terminal may be provided as a common ground for all capacitors in the can.

69. Detector Circuits

Since the voltage amplification of the r-f amplifiers of the modern t-r-f receiver is relatively great, the signal voltage at the input circuit of the detector stage is quite large. As the grid-leak detector is easily overloaded by such large voltages, it is rarely used in present day t-r-f receivers. The two most widely used detector circuits are the diode detector and the power detector.

70. Volume Control

a. Because all signals will not arrive at the receiving antenna with equal intensity, a *gain* or *volume control* is provided so that the volume of the signal received can be varied. This can be accomplished by various means. Those most commonly used are shown in figures 111 and 112.

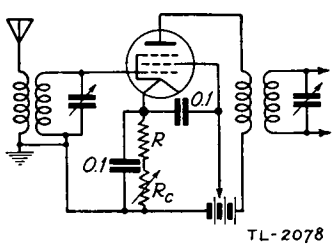

Figure 111. Grid-bias volume control.

In figure 111, the control is in the grid-bias circuit of a variable-mu pentode r-f amplifier. It will be recalled that varying the bias of variable-mu tubes causes the amplification factor to increase or decrease, thus controlling the gain of the stage. The resistor R provides the proper bias for maximum gain when R_c is adjusted to zero resistance. The bias voltages of all r-f amplifier tubes in the receiver are usually controlled when this method is used. Another method, illustrated in figure 112, controls the amount of a-f voltage applied to the grid of the a-f amplifier from the diode detector.

b. Once the volume or gain control of a receiver has been set, the output should remain constant, regardless of the strength of the incom-

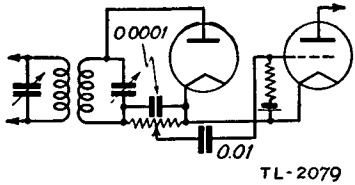

Figure 112. Detector output volume control.

ing signal. The development of the variable-mu pentode tube makes this possible, since the amplification of the tube may be controlled by the grid-bias voltage. All that is needed, then, for *automatic* volume control is a source of voltage which becomes more negative as the signal strength becomes greater. If this voltage is applied as bias to the grids of the variable-mu r-f amplifier stages, the grids will become more negative as the signals grow stronger. This will reduce the amplification, thus tending to keep the output of the receiver at a constant level. The *load resistor* of the diode detector is an excellent source of this voltage, as the rectified signal voltage will increase and decrease with the signal strength. A typical detector diode with an

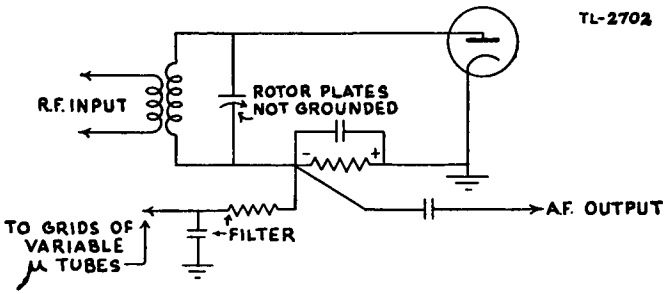

Figure 113. Automatic volume-control circuit.

automatic volume control (a-v-c) circuit is shown in figure 113. The signal is rectified by the diode detector, and the rectified current flowing through the load resistor causes a voltage drop across the resistor, as indicated in figure 113. The negative voltage developed is impressed on the grids of the variable-mu tubes in the r-f stages. Any increase in signal strength results in a greater voltage drop and thus is an increase in negative bias to the amplifiers. This results in a decrease in signal strength to the detector. A decrease in signal strength to the detector reduces the amount of negative bias on the amplifier tubes, increases gain in those stages and the input to the detector increases. The filter circuit removes the a-f component of the signal, and only the slower variations due to fading or change in position of the receiver effect the gain of the amplifier stages. Automatic volume control is particularly desirable for mobile receivers in which the signal strength is changeable as the receiver is moved.

c. The variable-mu tube is designed to operate with a minimum bias of about 3 volts. This minimum bias is usually provided by a cathode resistor, and the a-v-c bias is in series with it. A disadvantage of ordinary automatic volume control is that even the weakest signal reduces the amplification slightly. An adaptation which avoids this is shown in figure 114, and is referred to as *delayed* automatic volume control. In this particular circuit the a-v-c diode is *separate* from the detector diode, and both are housed in the same vacuum tube with a pentode amplifier. The tube is called a *duplex-diode pentode.* Part of the energy which is fed to the plate of the detector diode is coupled to the a-v-c diode section by the small capacitor *C*. The plate of the a-v-c diode is maintained at a negative voltage by means of a cathode-biasing resistor *R*. This keeps it from rectifying and producing the a-v-c voltage

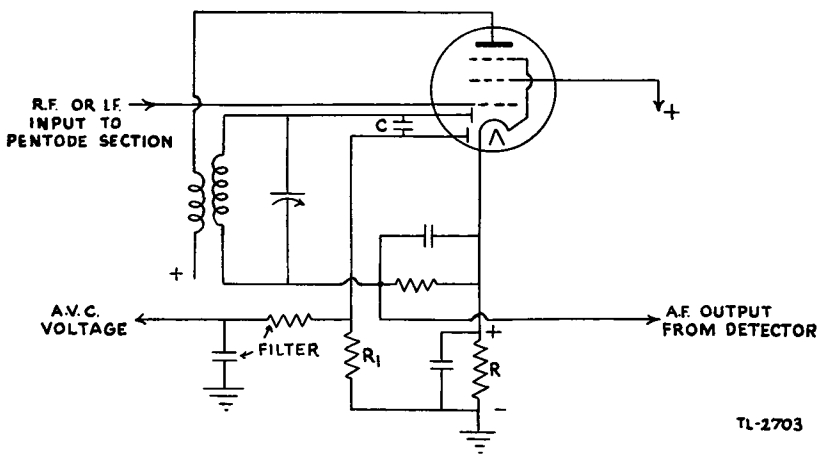

Figure 114. Delayed automatic volume control.

until the peak voltage coupled to it through *C* counterbalances the negative voltage of the diode. For very weak signals, which do not produce enough voltage on the plate of the a-v-c diode to overcome the existing negative potential, no a-v-c voltage is developed. Thus, the sensitivity of the receiver remains the same as if automatic volume control were not being used. On the other hand, when normal strength signals are being received, which do not need maximum sensitivity of the set, enough voltage will be coupled to the a-v-c diode to overcome the small negative plate potential and produce an a-v-c voltage drop across resistor *R*. This voltage has the a-f and r-f components filtered from it and is applied to the grids of the variable-mu tubes, as in the ordinary a-v-c circuit.

d. Duplex-diode triode and duplex-diode pentode tubes are widely used to supply a source of a-v-c voltage. In addition, the second diode in these tubes is used, together with the cathode, as a diode-detector

circuit, and the triode or pentode section is used as a separate amplifier. Thus, by the use of such multi-element tubes, the functions of detection, a-v-c voltage rectification, and amplification, is combined within a single tube.

71. A-f Amplifiers

Since the signal output of a detector stage in a t-r-f receiver is low, or weak, it is usual to have at least one stage of a-f amplification. The output of this first a-f amplifier may be further amplified if necessary, depending upon the requirements of the receiver. A headset may require no further amplification after the first a-f stage, while a large loudspeaker may require several additional stages of a-f amplification.

72. Shielding

In order to prevent coupling between two circuits, metal shields are used; iron for a-f circuits, and copper or aluminum for r-f circuits. All shields should be grounded to the chassis of the receiver, which is the *common ground* for all connections in the set. Since shielding changes the inductance of a coil, it changes the resonance frequency to which it responds. It is necessary, therefore, to make many adjustments in radio sets with the shields in place.

73. Circuit of a t-r-f Receiver

a. The complete circuit diagram of a five-tube tuned r-f receiver is shown in figure 115. This receiver uses three pentode r-f amplifier stages, a diode-detector stage, and a pentode a-f amplifier stage energizing a loudspeaker. The *A* supply (heater voltage) and *B* supply (plate voltage) are furnished the vacuum tubes by means of batteries

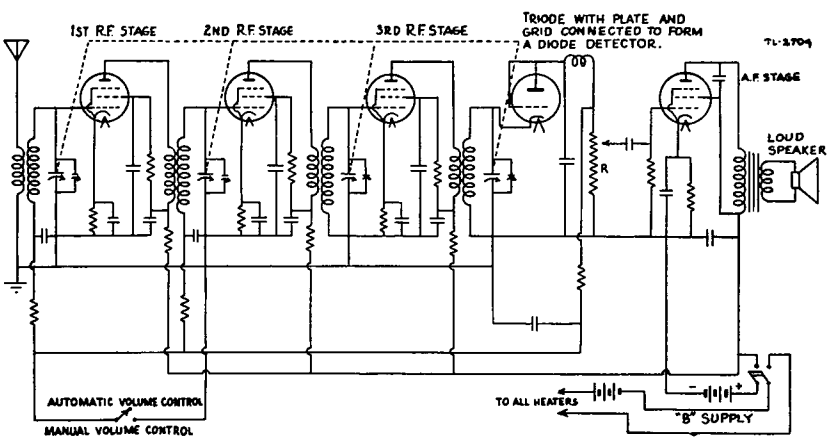

Figure 115. T-r-f receiver with automatic volume control.

when the double-pole single-throw switch is closed. The dotted lines connecting the four tuning capacitors indicate that these capacitors are *ganged.* A small *trimmer* capacitor is connected in parallel with each section of the ganged tuning capacitor for proper alignment of the receiver. These small trimmers compensate for inequalities in any of the circuit constants. The detector stage is considered as a diode, since the grid and the plate are connected together. Figures 116 to 120, inclusive, reproduce this same receiver diagram with various circuits emphasized to facilitate study.

b. In figure 116, all parts of the t-r-f receiver at ground, or chassis, potential are denoted by heavy lines. All points on the heavy (ground) line will be at the same potential, which is considered to be *zero* volts with respect to the rest of the receiver circuit. All voltages in the receiver are compared to this ground potential.

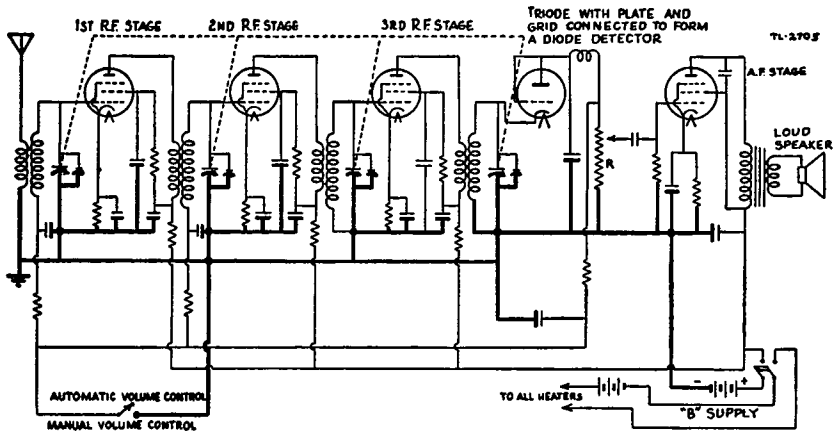

Figure 116. T-r-f receiver. Ground-potential elements denoted by heavy lines.

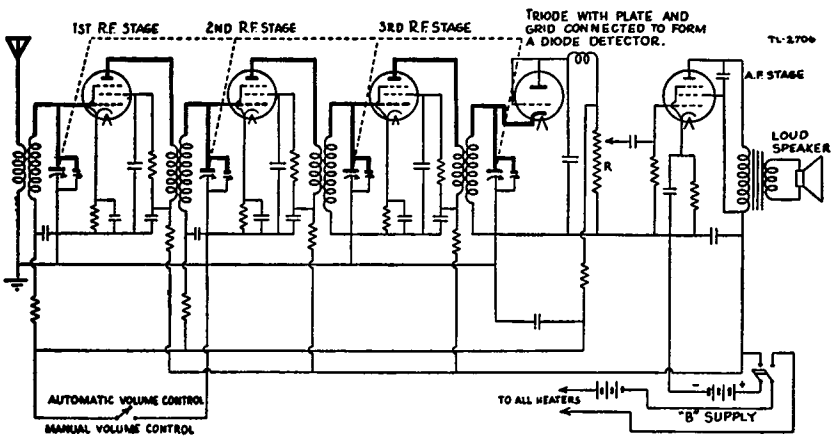

Figure 117. T-r-f receiver. Elements at high r-f potential denoted by heavy lines.

c. In figure 117, all of the elements of the t-r-f receiver at high r-f potential are denoted by heavy lines. By means of this diagram, it is quite simple to trace the path of the r-f signal from the antenna circuit to the diode detector.

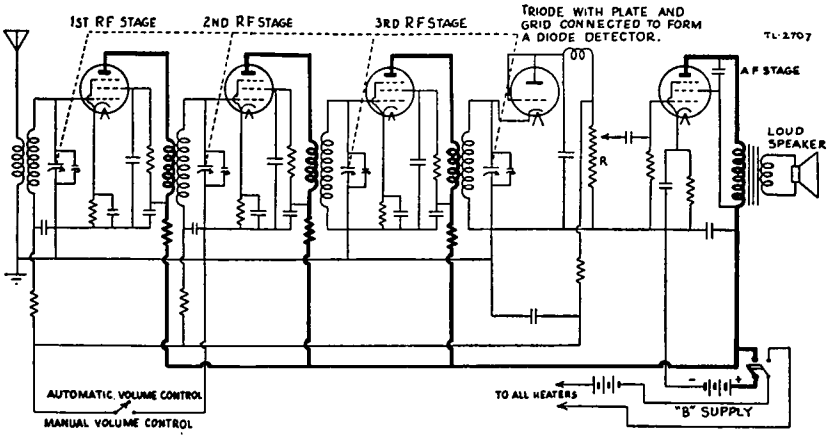

Figure 118. T-r-f receiver. (D-c plate supply shown by heavy lines.)

d. In figure 118, the high voltage d-c plate supply is shown by heavy lines. When the switch is closed, the four pentodes receive the high positive plate voltage necessary for their action as amplifiers. The diode, operating as a detector, does not require d-c plate voltage. Note the *decoupling* resistors in the plate leads of the first three pentodes.

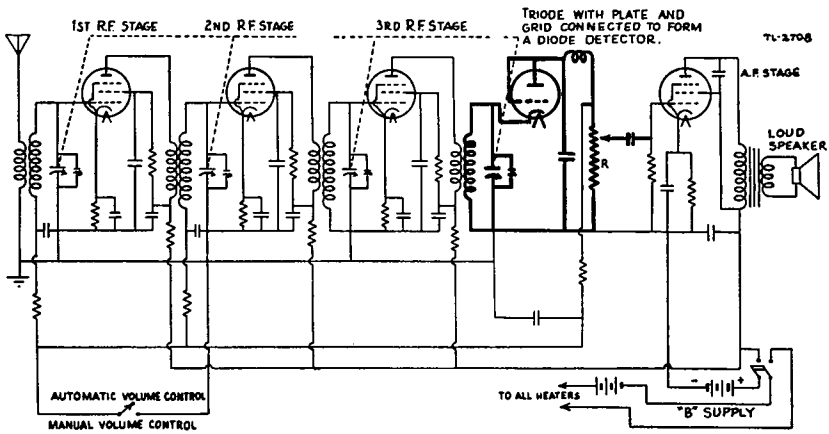

Figure 119. T-r-f receiver. (Detector circuit shown in heavy lines.)

e. In figure 119, the complete detector circuit is shown in heavy lines. The tube used in this stage is considered to be a diode. The grid and the plate of the triode are connected, or *tied* together, resulting in a *two-element tube,* or diode. The rectified or detected signal is taken

from a portion of the potentiometer R (through a capacitor) to the grid of the pentode a-f amplifier.

f. In figure 120, the a-v-c circuit is shown in heavy lines. The rectified signal voltage necessary for the operation of an a-v-c circuit is taken off the negative end of the potentiometer R, and returned to the first two stages of the receiver. It should be noted that only the first and second r-f amplifiers are supplied with an a-v-c voltage in this receiver. A switch is provided for short-circuiting the a-v-c when it is

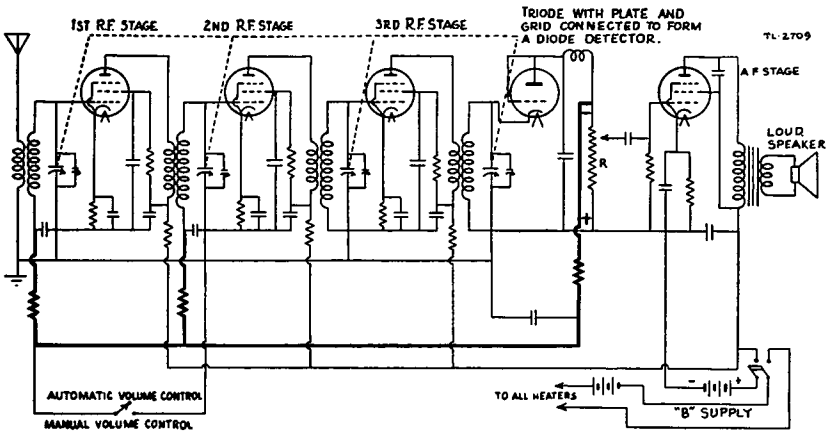

Figure 120. T-r-f receiver. (A-v-c circuit shown in heavy lines.)

not desired. If this is done, the potentiometer R is then used as a *manual* control of volume without affecting the normal operation of the t-r-f receiver.

74. Capabilities of t-r-f Receiver

Although the t-r-f receiver will give satisfactory results when covering a single low- or medium-frequency band, such as the broadcast band, it has several disadvantages which make it impractical for use in high-frequency or multi-band receivers. The chief disadvantage of the t-r-f receiver is that its *selectivity* (ability to separate signals) does not remain constant over its tuning range. As the set is tuned from the low-frequency end of its tuning range toward the higher frequencies, its selectivity *decreases.* At the high frequencies, which are widely used for Signal Corps communication, this lack of selectivity becomes extremely troublesome. Also, the amplification, or gain, of the t-r-f receiver is not constant with frequency. It is very difficult to design r-f amplifiers which will provide sufficient amplification for communication requirements at extremely high frequencies. The superheterodyne receiver has been developed to overcome these disadvantages.

SECTION VIII

SUPERHETERODYNE RECEIVER

75. Principles of Superheterodyne Operation

a. The essential difference between the t-r-f receiver and the superheterodyne receiver is that in the t-r-f receiver the r-f signal is amplified at the frequency of the signal, while in the superheterodyne receiver the signal is amplified at a new, lower frequency called the *intermediate frequency.*

b. The deficiencies of the t-r-f receiver (par. 74) are largely overcome in the superheterodyne receiver by combining the received signal with a different frequency in the receiver to produce a lower intermediate frequency. Though much lower than the original, this new frequency retains all the modulation characteristics of the old signal. By amplifying this lower frequency, it is possible to use circuits which are more selective and capable of greater amplification than the circuits

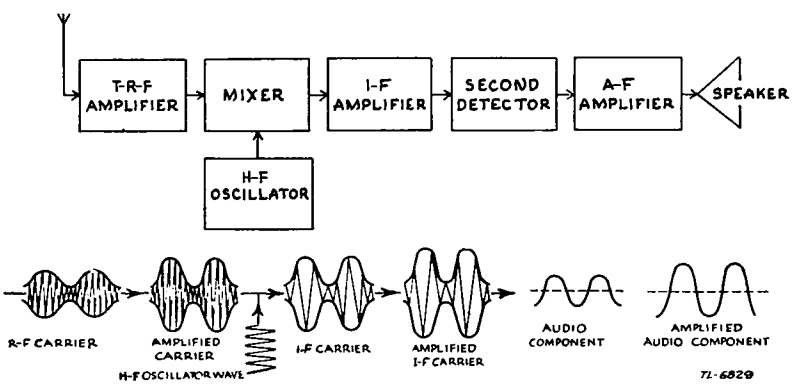

Figure 121. Block diagram of superheterodyne receiver, showing signal passing through receiver.

used in t-r-f receivers. The block diagram of a typical superheterodyne receiver shown in figure 121 indicates the manner in which the signal changes as it goes through the different stages. The received r-f signal is first passed through a r-f amplifier. A locally generated unmodulated r-f signal is then mixed with the carrier frequency in the mixer stage. This produces an intermediate frequency signal which contains all the modulation characteristics of the original signal, but is much lower

in frequency. This intermediate frequency is amplified in one or more stages, called *intermediate-frequency* amplifiers, and is then fed into the *second detector,* where it is detected or demodulated. The detected signal is amplified in the a-f amplifier and then fed to a headset or loudspeaker.

c. The conversion of the original r-f signal to the intermediate frequency is an important function of the superheterodyne receiver. By means of a vacuum tube operating as a detector, it is possible to change the frequency of a radio signal to *another* frequency, and yet retain everything that existed in the original signal. This process is known as *frequency conversion.* The tube is called a *mixer,* or *converter,* and sometimes a *first detector.* If a 1,000-kilocycle signal and 1,465-kilocycle signal are fed into a mixer, various frequencies are obtained in the output. One of the most prominent of these is the *beat frequency,* which is the difference between the two, or 465 kilocycles. *This is the interemediate frequency.* In the superheterodyne receiver these two signals come from different sources. One of them is the received signal. The other comes from a special stage used in all superheterodynes, known as the *local,* or heterodyne oscillator. Unlike the received signal, the signal from the heterodyne oscillator is unmodulated. In the superheterodyne receiver the intermediate frequency is set at a definite value. The frequency of the local oscillator must differ from that of the signal being received by an amount equal to this intermediate frequency. Thus, as the receiver is tuned to signals of various frequencies, the local oscillator must be tuned simultaneously so that its frequency is always separated from that of the signal by the same amount. For example, if the intermediate frequency is 465 kilocycles, a commonly used frequency, and the range of the receiver is from 500 to 25,000 kilocycles, the oscillator would have to operate over a range of either 35 to 24,535 kilocycles or 965 to 25,465 kilocycles. Whether the oscillator frequencies are higher or lower than the signal, the difference is still 465 kilocycles. The higher range is generally used, except when receiving signals of rather high frequencies. The i-f amplifier stages are permanently tuned to 465 kilocycles.

76. Frequency Conversion

a. The combined circuits of the oscillator stage and mixer stage form the *frequency converter* of the superheterodyne receiver. There are a large number of possible combinations of tubes and circuits which may be employed for frequency conversion. Triodes, pentodes, and multi-element tubes are used in various circuits, and several methods are used to mix the oscillator-output frequency with the incoming-signal frequency in the mixer stage. The oscillator output may be fed into the grid, cathode, or suppressor-grid circuit of the mixer tube; or the coupling may be achieved by means of a special grid built

into the tube for that purpose. Multi-element converter tubes have been designed so that the functions of oscillating and mixing may be combined in one tube; the *pentagrid converter* tube is an example of this widely used type.

b. When the frequency converter uses a separate, *single* tube as a local oscillator, the basic circuit is similar to the diagram shown in figure 122. A pentagrid (five-grid) mixer tube (fig. 122) combines

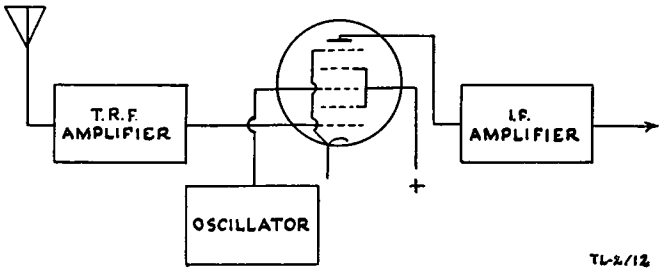

Figure 122. Pentagrid mixer.

the frequency from the oscillator (usually a triode) with the incoming r-f carrier.

c. A typical frequency-converter circuit using a triode oscillator and a triode mixer is shown in figure 123. The oscillator output is fed or injected into the grid of the mixer through a coupling capacitor. This is known as grid injection. The coil and tuning capacitor in the mixer-grid circuit are tuned to the frequency of the incoming r-f signal. The oscillator grid circuit is tuned to a frequency lower or higher than the signal frequency by an amount equal to the intermediate frequency. The i-f transformer in the plate cricuit of the mixer stage is tuned

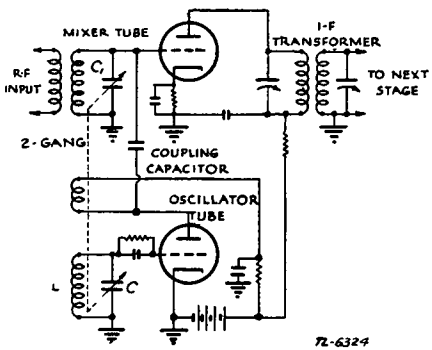

Figure 123. Frequency-converter circuit using triode oscillator and triode mixer.

to the intermediate frequency. The oscillator uses the same circuit as the regenerative detector studied in paragraph 54. The feedback is of such a value that the circuit is oscillating at a frequency determined

by the values of L and C. The capacitors C and C_1 are ganged so that, as the frequency of the signal being received is changed, the oscillator frequency will also be changed.

d. Two other means of coupling the mixer and local oscillator are shown in figure 124, where a pentagrid mixer and triode oscillator are used. Figure 124① shows the local oscillator coupled to the mixer tube by means of coil L_3 in the cathode circuit of the mixer tube. The

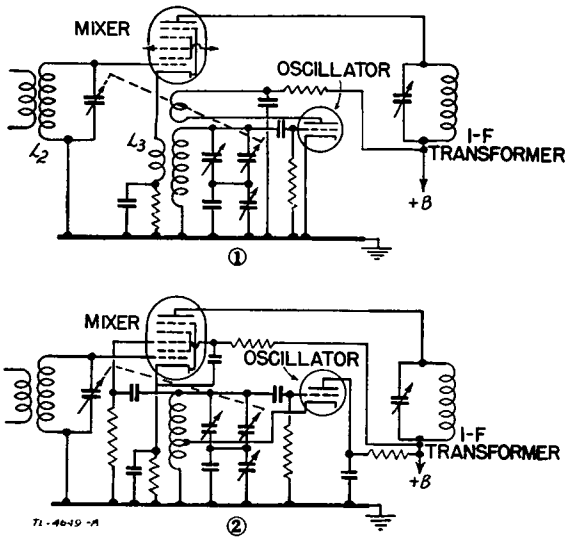

① *By means of coil L_3 in cathode circuit of mixer tube.*
② *By means of injection grid of mixer tube*
Figure 124. Local oscillator-to-mixer coupling methods.

r-f voltage induced in coil L_3 causes the plate current of the mixer tube to fluctuate at this frequency. The incoming signal induced in coil L_2 in the grid circuit of the mixer also affects the plate current. These two frequencies are mixed together and the beat between them, which is the i-f frequency, will be produced in the tuned plate circuit. *Interaction* between the oscillator and mixer is reduced somewhat by coupling the oscillator voltage to the cathode, as shown. Figure 124② shows a second method of frequency-conversion coupling between a pentagrid mixer having two independent control grids and a separate local-oscillator tube. Besides a heater and a cathode, the tube has five concentric grids and a plate. Grid 1, which is nearest the cathode, and grid 3 are the control grids of the tube, while grids 2 and 4 are screen grids. Grid 5 is a suppressor grid. The local oscillator is coupled to grid 3, and the incoming signal is applied to grid 1, which is called the signal grid. The voltages applied to these grids affect the plate current, thus producing a beat note or intermediate frequency in the plate circuit of the tube. This tube provides superior performance in

the high-frequency bands because of the excellent shielding between the oscillator and signal grids.

e. Another type of frequency conversion employs a single tube having the oscillator and frequency mixer combined in the same envelope. This type of tube also has five grids, and is called a *pentagrid converter.* The basic circuit for the pentagrid converter is shown in figure 125, and should be compared with the diagram in figure 122. The pentagrid converter depends on the electron stream from the cathode for coupling. It may be visualized as a device in which the plate current is modulated by variations in the cathode emission. The performance of a pentagrid converter is such that only one tube is necessary for converting the

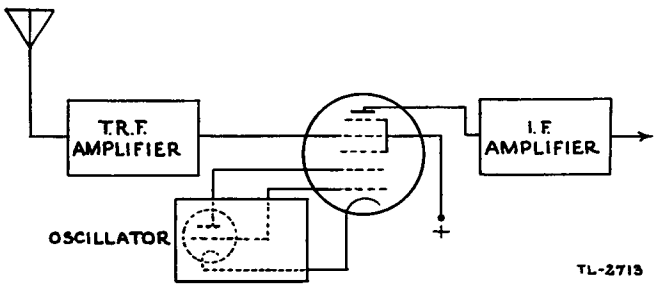

Figure 125. Pentagrid converter.

frequency of the desired signal from its original value to an intermediate frequency. Grids 1 and 2, and the cathode are connected to a conventional oscillator circuit and act as a triode oscillator. Grid 1 is used as the grid of the oscillator, and grid 2 is used as the plate. In this circuit, the two grids and the cathode can be considered as a composite cathode, which supplies to the rest of the tube an electron stream that varies at the oscillator frequency. The signal voltage is applied to grid 4, which further controls the electron stream so that the plate-current variations are a combination of the oscillator and the incoming-signal frequencies. The plate circuit of the pentagrid converter is tuned to the desired intermediate frequency. Grids 3 and 5 are connected together within the tube so as to form a screen grid which serves to accelerate the electron stream and to shield grid 4 electrostatically from the electrodes.

f. A typical pentagrid-converter circuit is shown in figure 126. The incoming r-f signal is fed from L_1 into the tuned grid circuit of L_2 and C_1. It is then applied to the control grid of the tetrode section of the tube at grid 4. In the oscillator section of the tube, the r-f energy is fed back from the plate circuit inductance L_4 to the tuned grid circuit consisting of L_3, C_2, and C_4. C_2 is the main tuning capacitor. Grid bias for the tetrode section of the tube is secured by the flow of plate current through the cathode resistor R_2. The incoming signal, and the

oscillator voltages are heterodyned in the electron stream flowing from cathode to plate. The output voltage is a beat frequency equal to the difference between the incoming signal and the oscillator frequencies.

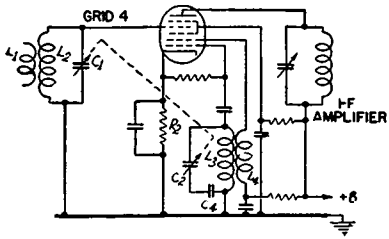

Figure 126. Coupling of oscillator to mixer by means of modulating electron stream from cathode of mixer tube.

g. The capacitor C_4, placed *in series* with the tuning capacitor C_2, is called a *padding capacitor.* This padding capacitor is necessary because the frequency of the oscillator tuned circuit is *higher* than that of the r-f circuit. It is thus necessary to have a low value of inductance and capacitance in the oscillator circuit in order to obtain a higher frequency. In some superheterodyne sets, this is accomplished by having a smaller capacitor and coil in the oscillating circuit. In others, such as in figure 126, it is more convenient to use the same size capacitors in both circuits and reduce the value of the oscillator capacitor by placing a fixed or variable capacitor in series with it. A small trimmer capacitor may also be placed across the oscillator tuning capacitor to take care of any slight frequency deviations.

77. I-f Amplifiers

a. The intermediate-frequency amplifier is a high-gain circuit permanently tuned to the frequency difference between the local oscillator and the incoming r-f signal. Pentode tubes are generally used in these amplifiers, which may consist of one, two, or three stages. Each stage is adjusted to the selected intermediate frequency. Since all incoming signals are converted to the same frequency by the frequency converter, this amplifier operates at only one frequency. The tuned circuits, therefore, may be permanently adjusted for maximum amplification and desired selectivity. It is in this amplifier that practically all of the voltage amplification and selectivity of the superheterodyne is developed.

b. The i-f transformers used with i-f amplifiers are tuned by adjustable, or trimmer, capacitors to the desired frequency. Both mica and air-trimmer capacitors are used. Generally the i-f transformers are double tuned, that is both primary and secondary coils are tuned to the proper frequency. For special applications, single-tuned i-f trans-

formers are used, in which case the secondary winding alone is tuned. I-f transformers are made with both air and powdered-iron cores. Some iron core i-f transformers have fixed mica tuning capacitors. The tuning is accomplished by moving the iron cores in or out of the coil by means of an adjusting setscrew. This is known as *permeability tuning.* The i-f transformers and capacitors are mounted in small metal cans, which serve as shields. When adjustable capacitors and fixed inductors are used, the capacitors are small compared with the large ganged tuning capacitors used in r-f stages. Small adjusting shafts protrude from the top of these capacitors and can be reached through a small hole in the can with a hexagonal wrench or screw driver. Thus, adjustment of the capacitor is possible without removing the assembly from the shield.

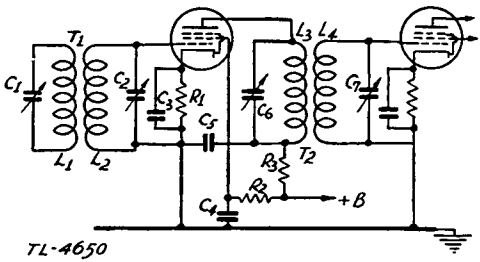

Figure 127. Circuit diagram of single-stage i-f amplifier using pentode tube.

c. The diagram of a single-stage i-f amplifier using a pentode tube is shown in figure 127. Transformer T_1 is the input i-f transformer. The primary of the transformer, L_1-C_1, is in the plate circuit of the mixer and is tuned to the selected intermediate frequency. The secondary circuit, L_2-C_2, which is inductively coupled to the primary, is tuned to this same frequency and serves as the input circuit to the grid of the tube. Resistor R_1 in the cathode circuit provides the necessary grid-bias voltage, while capacitor C_3 bypasses r-f currents around this resistor. Resistor R_2 and capacitor C_4 are the screen-voltage-limiting resistor and the screen bypass capacitor, respectively. Resistor R_3 and capacitor C_5 serve as a decoupling network to prevent any of the signal currents from flowing back through the circuit and causing interaction between stages. Capacitor C_5 furnishes a low-impedance path to the cathode or ground for the signal currents, while resistor R_3 prevents any of the signal currents from flowing to the plate supply. These decoupling networks may be employed in grid, screen-grid, or plate circuits. Circuit L_3-C_6 is the tuned-primary circuit of the second i-f transformer T_2. The secondary circuit L_4-C_7 is coupled to the primary, and is the input circuit of the next tube, which may be another i-f

amplifier or the second detector. The two resonant circuits of the second i-f transformer T_2 are tuned to the same frequency as the circuits in T_1.

d. Since the i-f amplifier is intended to furnish most of the gain of the superheterodyne the number of i-f amplifier stages used will depend generally on the sensitivity required of the receiving set. From one to three i-f amplifier stages will be found in modern superheterodyne receivers.

e. The intermediate frequency of a superheterodyne will depend, in general, on two factors, the first of which is the desired selectivity. The higher the intermediate frequency, the broader (or less selective) will be the tuning of the receiver. The second factor is the difference between the signal frequency and the intermediate frequency. It is not practical for the intermediate frequency to be very much lower than the signal frequency. For this reason, receivers used on the extremely high frequencies often use a fairly high intermediate frequency. The most common intermediate frequency is in the neighborhood of 456 to 465 kilocycles, although frequencies as low as 85 kilocycles, and as high as 12,000 kilocycles, are found in receivers designed for special purposes.

f. If extremely sharp tuning is required of a receiver, a *piezoelectric quartz crystal* may be used as a *crystal filter* in the i-f amplifier. The crystal acts like a tuned circuit but is many times more selective than those made of coils and capacitors. The crystal will operate only on one frequency which is determined by the thickness of the crystal.

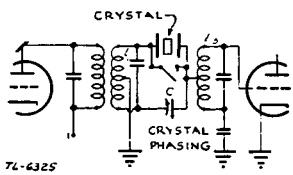

Figure 128. Typical crystal-filter circuit.

A typical crystal-filter circuit used in communications receivers is shown as figure 128. Unless steps are taken to balance it out, the small capacitance between the metal plates of the crystal holder will bypass some undesired signals around the crystal. This balancing is accomplished by taking a voltage from the center-tapped coil L_2, 180° out of phase with the signal voltage, and applying it through the crystal-phasing capacitor C so that it bucks or neutralizes the undesired signal. The balanced-input circuit may be obtained either through the use of a split-stator capacitor, or by the use of a center-tapped coil as in figure 128. Closing the switch across the crystal shorts the crystal-filter circuit, leaving an ordinary i-f stage. The output of the

crystal filter is applied to a tap on L_3, which is the input circuit of the next stage, in order to provide the proper impedance match.

g. To keep the intermediate frequency of a superheterodyne centered on its band, automatic-frequency control is sometimes used. This arrangement is useful in compensating for any changes in frequency of the local oscillator. While details of its operation can be understood only after studying section XIII, the principle is not difficult. If the intermediate frequency shifts off the center of its band, that is, varies slightly from its correct frequency, the discriminator (a rectifier) turns the frequency change into a proportionate voltage change. This voltage is fed to a tube in the frequency-control circuit which, together with a capacitor and resistor across the tank circuit of the local oscillator, will change the reactance, but not the resistance of the tank circuit, and hence will change the frequency of the local oscillator. When properly adjusted, any shift in the i-f will be applied through the automatic-frequency control circuit to bring the local oscillator to its correct frequency.

h. Noise limiters are employed occasionally in the i-f circuits of superheterodynes to suppress strong impulses of short duration, such as interference from sparking motor contacts or atmospheric static. In one such noise limiter circuit, a part of the intermediate frequency is diverted along a path paralleling the regular i-f amplifier. It reaches a special detector tube which is so heavily biased that the i-f signal is stopped at this point. If a sudden sharp pulse raises the detector tube above cut-off, the pulse will pass through, and will be fed back out of phase, thus blocking the sudden pulse which will be trying to pass through the regular i-f amplifier.

78. R-f Amplifiers

a. An r-f amplifier is not absolutely necessary in a superheterodyne, but it is a valuable addition for the following reason. If the converter stage were connected directly to the antenna, unwanted signals might be received. These unwanted signals are called *images.* Since the mixer stage produces the intermediate frequency by heterodyning two signals whose frequency difference equals the intermediate frequency, *any two signals whose frequencies differ by the intermediate frequency* will produce an i-f signal. For example, if the receiver is tuned to receive a signal of 2,000 kilocycles and the oscillator frequency is 1,500 kilocycles, an i-f signal of 500 kilocycles will be produced. However, a signal of 1,000 kilocycles finding its way into a mixer will also produce an i-f signal of 500 kilocycles, since the difference between its frequency and the oscillator frequency is 500 kilocycles. Therefore, some method must be found to keep these unwanted signals, or images, out of the mixer stage. The extra selectivity provided by an r-f amplifier is the

solution. Since the r-f amplifier greatly amplifies the desired signal, and does not amplify the image, the possibility of image interference is reduced considerably.

b. Almost all superheterodyne receivers are provided with at least one r-f amplifier stage. The r-f amplifiers used are of the same type as those discussed in section VI. When used in a superheterodyne receiver, r-f amplifiers are sometimes called *preselectors.*

79. Beat-frequency Oscillators

a. In order to receive c-w code signals on a regenerative detector, it will be necessary to make the detector oscillate at a frequency slightly different from that of the incoming signal so as to produce (by heterodyning) an audible signal. (See par. 56.) In superheterodyne receivers, this is done by a separate oscillator, known as the *beat-frequency oscillator,* which is tuned to a frequency that differs from the intermediate frequency by an audible amount. For example, a beat-frequency (b-f) oscillator tuned to 501 kilocycles will produce

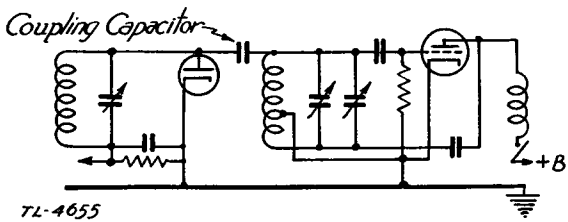

Figure 129. A b-f oscillator coupled to second detector of a superheterodyne.

a beat note of 1 kilocycle, an audible frequency, when heterodyned with a 500-kilocycle i-f signal. The output of this oscillator is coupled to the second-detector state of the receiver.

b. A b-f oscillator circuit is shown in figure 129. A switch and a means of frequency control are usually located on the front panel of the receiver to turn on the oscillator stage and to control the frequency, or pitch, of the audible signal.

80. Second Detectors

The detectors used in superheterodyne receivers to detect, or demodulate, the intermediate frequency are of the same general types as those employed for t-r-f receivers. Automatic volume control is widely used in superheterodyne circuits. The a-v-c voltage may be applied to any or all of the stages before the second detector except the local oscillator.

81. Audio Amplifiers

The a-f amplifiers used in superheterodyne receivers follow the same general principles as those employed in t-r-f receivers. The desired power output is the main consideration.

82. General Superheterodyne Circuit

a. The circuit diagram of a six-tube battery-operated superheterodyne receiver is shown in figure 130. This receiver has one stage of tuned

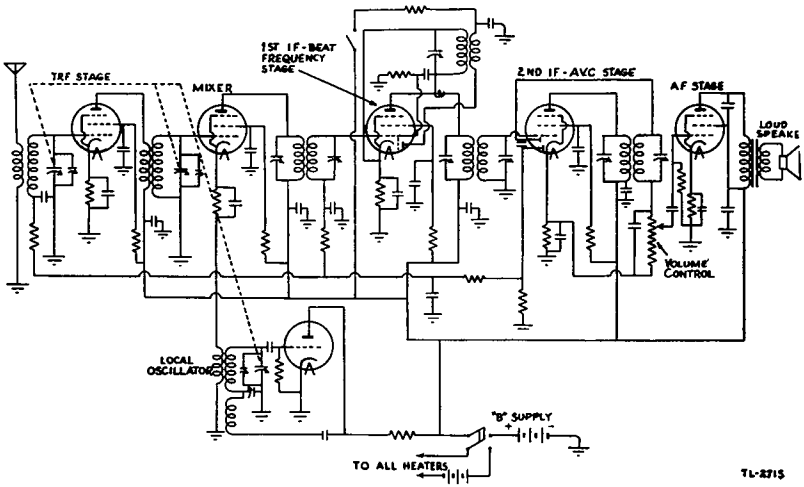

Figure 130. Superheterodyne receiver.

r-f preselection (r-f amplification) a triode acting as a local oscillator, a pentagrid mixer, two stages of i-f amplification, a diode supplying voltage for delayed automatic volume control, a diode detector, and a pentode a-f power-output stage feeding into a loudspeaker. The heater supply and *B* supply (plate voltage) are furnished to the various stages by means of batteries when the double-pole single-throw switch is closed. The amplifier tubes obtain their grid bias from the resistor and capacitor combination in the cathode circuit of each of the five tubes. The dotted lines connecting the three tuning capacitors indicate that these variable air capacitors are ganged. Small trimmer capacitors are connected in parallel with each of the ganged tuning capacitors for proper alignment of the receiver. The first i-f stage uses a complex tube known as a *triode-pentode.* The pentode section of the tube functions as a straightforward i-f amplifier, and the triode section, operating as an oscillator, can be switched into the circuit to provide a heterodyne action for the audible reception of c-w signals. The second i-f stage combines several functions in one tube known as a *duplex-diode pentode.* This tube contains a pentode i-f amplifier and two diodes, one diode acting as straight signal detector, the other

supplying a rectified a-v-c voltage. Figures 131 through 134 reproduce this same superheterodyne receiver diagram with various circuits emphasized to facilitate study.

b. In figure 131 all parts of the superheterodyne circuit relative to the *second detector* are denoted by heavy lines. A single diode (in the duplex-diode triode tube) supplies an *audio*-frequency signal voltage

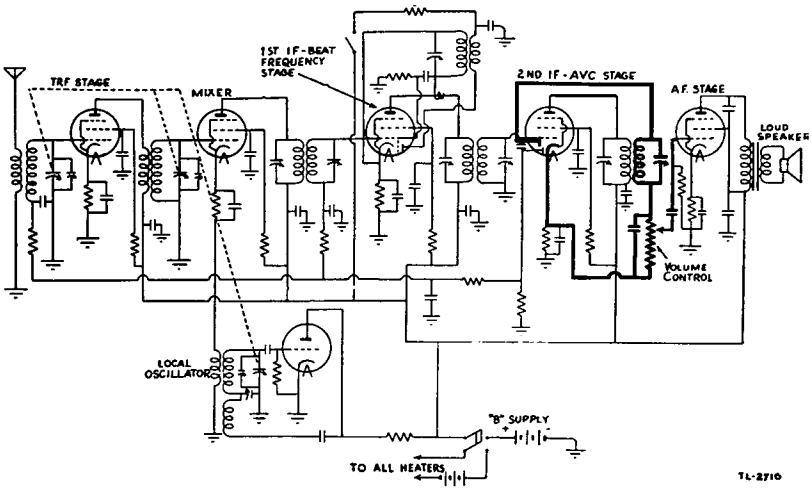

Figure 131. Superheterodyne receiver. (Second detector circuit shown in heavy lines.)

across the variable resistor, or *volume control.* Any portion of this voltage can be fed to the pentode a-f power amplifier, and the level set by the volume control will be maintained by action of the delayed automatic volume control.

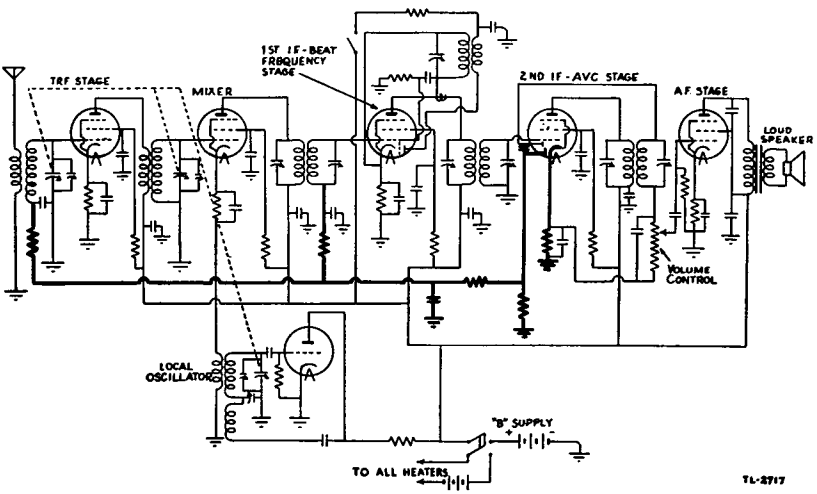

Figure 132. Superheterodyne receiver. (Delayed a-v-c circuit shown in heavy lines.)

c. In figure 132 the delayed a-v-c circuit is shown in heavy lines. The rectified signal voltage necessary for the operation of an a-v-c circuit is obtained by the second diode of the duplex-diode triode. It is passed through isolating resistors, filtered by action of the r-f bypass capacitors, and applied both to the first r-f amplifier stage and the first i-f amplifier stage.

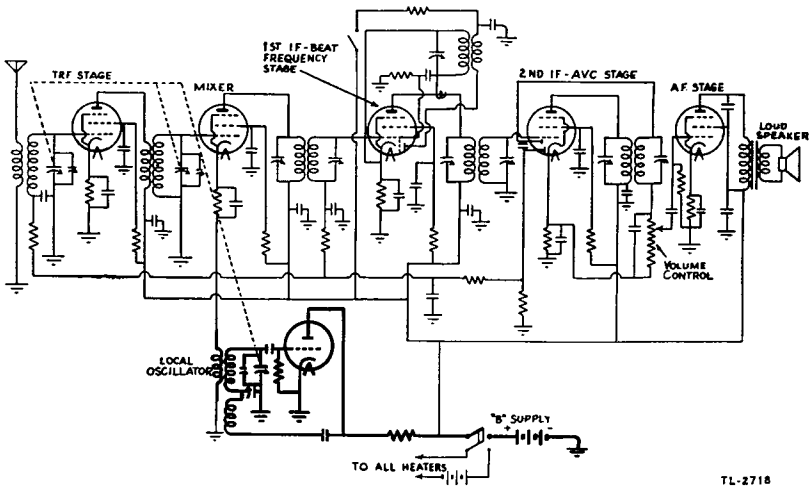

Figure 133. Superheterodyne receiver. (Local oscillator shown in heavy lines.)

d. In figure 133 the *local oscillator circuit* is shown in heavy lines. The tuned circuit, which determines the frequency of the local oscillations, is composed of a fixed coil and a variable amount of capacitance,

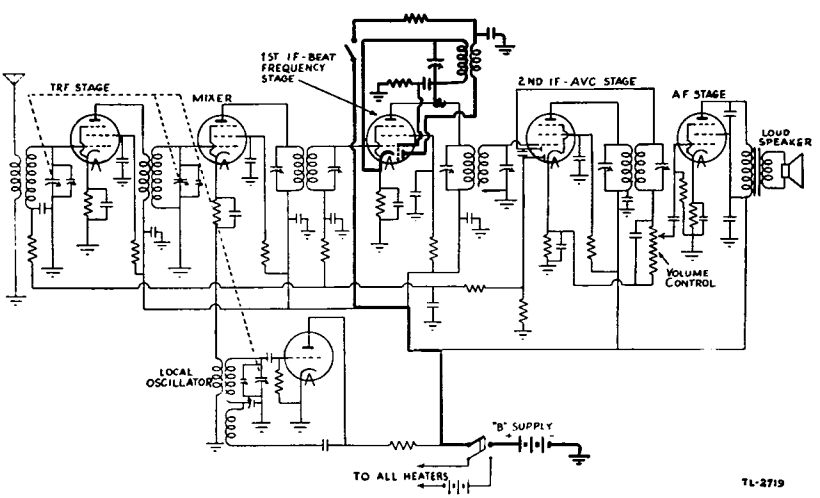

Figure 134. Superheterodyne receiver. (B-f oscillator for c-w reception shown in heavy lines.)

consisting of a variable air-tuning capacitor, an adjustable trimmer capacitor in parallel with the tuning capacitor, and an adjustable padding capacitor in series with the tuning capacitor.

e. In figure 134 the *b-f oscillator circuit* is shown in heavy lines. The pentode section of the first i-f amplifier tube, a triode-pentode, functions as a normal i-f amplifier when the b-f-o power switch is open, as shown in diagram. When this switch is closed, the pentode continues to operate as an i-f amplifier, but oscillations also take place in the triode section of the tube at the frequency of its external tuned circuit. By means of a small variable capacitor, the frequency of this tuned circuit can be altered for different incoming signals, so that the local oscillations produced in the regenerative circuit are only *slightly* different in frequency from the incoming signal. When these two frequencies are mixed in the first i-f amplifier stage, there is a heterodyne action producing an audible signal which can be used for the reception of c-w code.

83. Typical Army Superheterodyne Receiver

a. A complete schematic diagram of a typical Army superheterodyne is shown in figure 135. This receiver is operated from 110 volts alternating current and uses eight vacuum tubes. The r-f signal voltage from the antenna circuit is amplified by a pentode r-f amplifier stage. Another radio frequency generated in the local oscillator stage is mixed with the signal voltage in the pentagrid mixer stage, to create an i-f carrier. This intermediate frequency is amplified by a pentode i-f amplifier stage, and is then detected by the diode detector section of a duplex-diode triode. The resulting a-f signal is applied to the triode section of this complex tube which operates as an *audio-frequency voltage-amplifier stage.* This signal is further amplified by a *push-pull audio-frequency power-amplifier stage* of two pentodes, and then is fed to the loudspeaker. High-voltage direct current for the plates, and low-voltage alternating current for the heaters of the vacuum tubes are obtained from the *power supply stage,* which uses a full-wave rectifier circuit. It should be noted that every tube and circuit element in figure 135 has an identifying number. This is to facilitate a more thorough analysis of the set, as the signal is traced through the receiver from the antenna to the speaker.

b. Assume that the receiver is tuned to a 1,000-kilocycle signal and that the i-f amplifier frequency is 465 kilocycles. The signal is picked up by the antenna and fed to the grid of the r-f amplifier tube (VT–117) through the r-f coupling transformer T_1. The signal is then amplified by the tube and fed to the r-f coupling transformer T_2. It is then applied to the control grid (grid 1) of the mixer tube (VT–87). The grid circuits of the r-f and mixer stages are both tuned to the 1,000-kilocycle signal by a single dial controlling the ganged capacitors C_1 and C_2. C_4 is a bypass capacitor for the grid-decoupling resistor R_1.

R_2 is the biasing resistor and C_5 the bypass capacitor for R_2. R_3 is the screen grid voltage-dropping resistor and C_6 is the bypass capacitor for R_3. R_4 and C_7 constitute the plate current filter which prevents the r-f signal from feeding back through the power supply to ground and thereby producing common coupling between stages. The high-frequency oscillator (VT–65) must generate oscillations 465 kilocycles higher in frequency than the r-f carrier. It is therefore tuned by C_3 (which is ganged with C_1 and C_2) to 1,465 kilocycles. C_{24} is a trimmer for C_3 and C_{26} is a trimmer for C_{25} which is the padder capacitor used to make the oscillator track with the r-f amplifier. R_{22} is the oscillator-biasing resistor and C_{23} is a blocking capacitor used to prevent the oscillator inductor from shorting R_{22}. R_{21} is the oscillator plate voltage-dropping resistor and C_{27} is the bypass capacitor for R_{21}. C_{27} also serves as a blocking capacitor to prevent shorting the plate voltage to

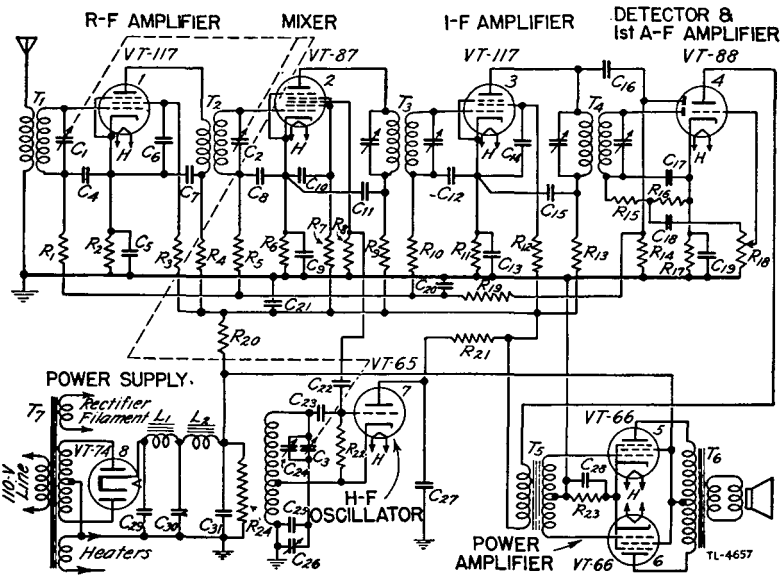

Figure 135. Circuit diagram of a modern Army superheterodyne receiver.

ground. The high-frequency voltage is injected into the electron stream of the mixer tube by grid 3. R_8 is the injector grid-biasing resistor, and C_{22} is the coupling capacitor for the oscillator. The 1,000-kilocycle signal and the 1,465-kilocycle signal are mixed in the electron stream of the mixer stage. The i-f stage functions in the same manner as the r-f stage, except that it always works at the intermediate frequency and therefore is much more efficient than the r-f stage. The i-f transformers T_3 and T_4 are permanently tuned to the 465-kilocycle intermediate frequency, and usually need only occasional checking for correct alignment. The lower diode section of tube 4 (VT–88) is the

detector, with R_{15} and R_{16} as the detector load resistor. C_{17} is the r-f bypass capacitor. With R_{15} it forms an r-f filter to prevent the r-f component of the signal from feeding into the a-f section through the blocking capacitor C_{18} and the volume control R_{18}. The audio signal voltage developed across R_{16} also appears across the volume control R_{18}. All, or a portion, of this voltage, depending on the setting of the variable arm, is fed to the grid of the first audio amplifier (triode section of tube 4). R_{17} is the bias resistor for the first a-f amplifier, and C_{19} is its bypass capacitor. The i-f voltage from the plate of the i-f amplifier tube is fed through the blocking capacitor C_{16} to the upper diode plate, which rectifies the signal voltage to develop the a-v-c voltage. R_{14} is the a-v-c diode load resistor. The d-c voltage developed across this resistor is in series with the r-f amplifier, mixer, and i-f amplifier grid circuits. It is applied to the grids through the a-v-c filter resistor R_{19}. R_{19} and C_{20} act as a filter to eliminate any audio component from this voltage, and thus prevent the grid bias of these tubes from fluctuating at an a-f rate. The output of the first a-f amplifier is fed to the grids of the push-pull amplifier through the interstage-coupling transformer T_5. R_{23} is the bias resistor for both of these tubes and C_{28} is its bypass capacitor. The output of the power amplifier is fed to the voice coil of the speaker through the output (matching) transformer T_6.

c. T_7 is the power transformer; tube 8 the power rectifier; L_1 and L_2 the filter chokes; C_{29}, C_{30} and C_{31} the filter capacitors, and R_{24} the bleeder resistor. The specific function of each of these parts will be discussed in section IX.

84. Alignment

a. In order to operate one or several r-f stages of a superheterodyne with a single control, the tuning capacitors of the r-f stages and the oscillator are ganged together on a common shaft. When the control knob is turned, the various r-f stages must all tune to the same frequency and the local oscillator must track in such a manner that the frequency difference between the local oscillator and the r-f stages is always equal to the intermediate frequency. When the circuits are adjusted in this manner, they are said to be *tracking*. The trimmer (parallel) capacitors are used to assure tracking at the high-frequency end of the band, and the padder (series) capacitors are used to assure tracking at the low-frequency end of the band. In general, only the local oscillator is supplied with a padder capacitor. It is also necessary to adjust the i-f stages so that they all tune to the intermediate frequency. Misalignment in any stage of a superheterodyne will cause a decrease of sensitivity or selectivity, or both.

b. A calibrated oscillator or signal generator, insulated screw drivers, insulated adjustment wrenches, and some form of output indicator are necessary to properly align a modern superheterodyne receiver. The

signal generator is an oscillator calibrated in frequency and capable of delivering either a c-w or a modulated signal. Provision is made for controlling the output signal voltage from a few microvolts to the full output voltage. The insulated screw drivers and wrenches are used to adjust the tuned circuits. The screw drivers and wrenches may be of a composition material and usually have bits and heads of metal, which give more substantial service and at the same time place a minimum of metal in the field of the circuit that is being adjusted. The output indicator may be an output meter, loudspeaker, headset, oscillograph, or a tuning-indicator tube.

SECTION IX

POWER SUPPLIES

85. Power Requirements of Radio

a. Vacuum tubes used in various circuits of radio receivers and transmitters require voltages of various values for the filament, screen, and plate circuits. It is the purpose of the power supply to provide these voltages. Except for filament power, which can be alternating current, the output from a power supply must be as nearly pure direct current as possible, and the voltage must be of the correct value for the apparatus for which it is to be used. Radio transmitters require more power than receivers. Consequently, transmitter power supplies operate at higher voltages, with greater current flowing.

b. Power to heat the filaments of tubes is sometimes called the *A* supply, and normally will be a low voltage. In portable field radio sets the cathode, or filament, power supply is furnished by batteries, generators, or dynamotors. Semiportable and mobile sets generally use storage batteries for filament-heating purposes. In permanent ground installations, filaments are heated from the standard a-c lighting circuit through a step-down transformer.

c. The plate and screen power supply is sometimes called the *B* supply, and will usually be a high voltage. The plate supply in a lightweight transceiver (small combined transmitter and receiver) is furnished by batteries. Dynamotors driven by storage batteries or by hand are generally used for plate power in portable and mobile sets, while many large semiportable transmitters carry gasoline-engine-driven generator equipment. Permanent installations ordinarily use some sort of rectifier-filter system plate supply.

d. When a grid-bias voltage is used, it is sometimes called the *C* supply. Grid bias for voltage amplifiers is customarily taken from a part of the plate supply by some means of self-bias. For large power-amplifier tubes a separate rectifier-filter system or d-c generator is frequently employed.

e. Radio power supplies may be divided into three general classes: battery, a-c, and electro-mechanical systems.

86. Battery Power Supply

Small portable receivers and transmitters usually operate from dry batteries. The current drain from the batteries is low and the apparatus

can be operated several hours from this type of supply before it must be replaced. Battery packs containing the filament, plate, and grid batteries are provided for some sets; separate filament, plate, and grid batteries are used in others. Batteries have the advantage of being capable of delivering a smooth, unfluctuating direct current. Where large voltages and currents are required, however, they become cumbersome and expensive.

87. A-c Power Supply

a. This type of power supply is generally used whenever commercial power is available. The Army also uses it for field installations which are equipped with gasoline engine driven generators designed to supply a source of alternating current. An a-c operated power system differs from other types in that no batteries or mechanical devices are used. It makes use of an a-c source of power, and since the usual commercial supply is 110-volt, 60-cycle, this voltage will be assumed in the following discussion of a-c power supplies.

b. All a-c operated power supplies may be divided into four parts: the transformer, rectifier, filter, and bleeder, or voltage divider system. The transformer provides a means of increasing or decreasing the voltage by transformer action. (See par. 27.) The rectifier serves to convert the alternating current to pulsating direct current. The filter smooths out the pulsating direct current, and the voltage divided system is used to obtain various d-c voltages for the plate, screen, and control-grid circuits.

88. Vacuum-tube Rectifiers

a. The diode finds its most important use as a rectifying tube in both transmitter and receiver power supplies. A simple a-c rectifier consisting of a *single* diode is shown in figure 136. When an a-c voltage is applied between points *A* and *B*, electrons will flow from the cathode to the plate of the diode during the positive alternation of each cycle (between points 1 and 2 in figure 136①). During the next alternation,

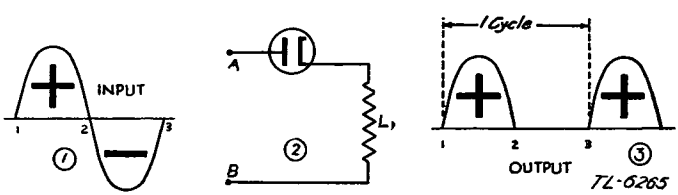

Figure 136. Half-wave rectifier.

between points 2 and 3, the plate voltage is negative with respect to the cathode and no current will flow in the circuit. Thus, since the diode will pass current only during the positive alternation of each

cycle, current will flow in only one direction through load resistor *L*. Since only one-half of each cycle is used in this type of rectifier, it is called a half-wave rectifier. Figure 136① shows the a-c input and 136③ the pulsating output voltage of a half-wave rectifier. It should be noted that the d-c pulsations have the same frequency as the applied a-c voltage. This makes it difficult to filter properly. If a higher voltage is necessary, a step-up transformer may be used.

b. A full-wave rectifier consists of two half-wave rectifiers working on opposite alternations, thus utilizing the complete cycle of alternating current. The two rectifiers are connected in such a manner that both half-waves are comboned in the output, as shown in figure 137. Referring to figure 137, assume that during the first alternation the plate of tube *A* is positive with respect to the center tap of the transformer. Since the plate of this tube is positive, electrons will flow as indicated by the solid arrows. During the next alternation the voltage across the secondary winding of the transformer will be reversed, thus making the plate of tube *B* positive with respect to the center tap, and the plate of tube *A* negative. No current will flow through tube *A* because the plate is now negative. The plate of tube *B* is positive, however, and electrons again will flow through load resistor *L*. Electron flow during the negative alternation is represented by the dotted arrows. It should be noted that current through resistor *L* is always in the same direction. Observe also that there are two d-c pulsations for each a-c cycle, one for the positive alternation and one for the negative alternation. Thus it may be seen that both alternations are combined and that the output pulsations of a full-wave rectifier are twice the frequency of the input power. This results in lower filter requirements. For relatively low voltages, such as those required in receivers, the full-wave rectifier may consist of two plates and a filament or cathode in one envelope. For the higher voltages required in transmitters, two separate tubes are usually used.

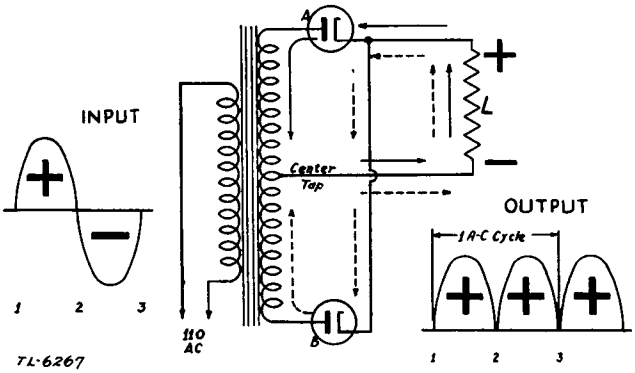

Figure 137 Full-wave rectifier.

c. Vacuum-tube rectifiers are of two general types, *high-vacuum* and *mercury-vapor* tubes. The former offers the advantage of ruggedness, the latter, high efficiency. Both tubes contain two elements, a plate and a cathode, and both operate on the principle of current flow only during intervals of positive plate potential. *High-vacuum diodes* are employed as rectifiers for power supplies of radio receivers and low-powered stages of transmitters. The voltage drop across this type of rectifier is proportional to the current drawn through the tube, and is fairly high in comparison to some other types. The mercury-vapor rectifier tube is of greatest value where high voltage and large current are to be handled. The voltage drop across a mercury-vapor tube is extremely low, being approximately 15 volts regardless of the current drawn by the load.

89. Power Supply Filters

a. The output of vacuum-tube rectifier systems is made up of pulsations of current and voltage, all in the same (positive) direction. Before this rectified voltage can be applied to the plate or grid circuits, it must be smoothed out into a steady, nonfluctuating d-c flow. Such smoothing out of the pulsations is accomplished by means of filter circuits, which are electric networks consisting of series inductors and shunt capacitors. Filter circuits may be classified as capacitor-input or choke-input filters, depending on whether the filter input consists of a shunt capacitor or a series inductor (choke coil). Figure 138① shows a filter of the capacitor-input type; figure 138② shows a choke-

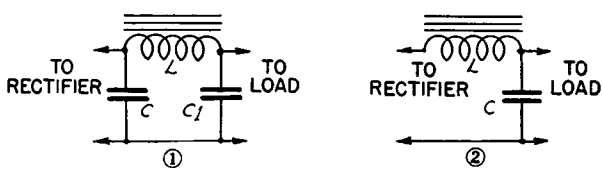

Figure 138. Types of filter networks.

input type. A resistance load connected to the output of a full-wave rectifier is shown in figure 139①. The voltage across the load will follow the rectified a-c pulsations as shown in figure 139②. This is the condition for a rectifier *without a filter network.*

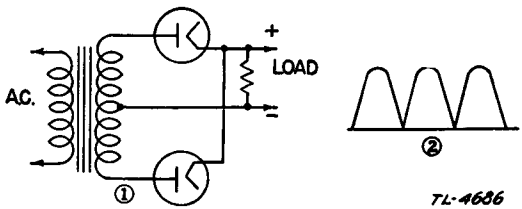

Figure 139. Load connected across output of a full-wave rectifier, and current waveform through the load.

b. The capacitor-input filter (fig. 140①) is the simplest type of filter and consists of a single capacitor, *C*, connected across the rectifier output and in parallel with the load. During the time the rectified alternating current is approaching its peak value, it is charging the capacitor and delivering a current to the load. After reaching the

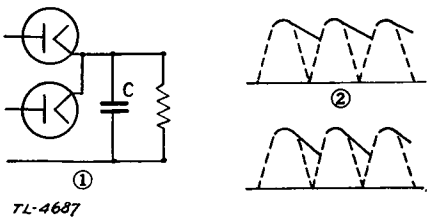

① *Rectifier with capacitor filter.*
② *Voltage across C with small load current.*
③ *Voltage across C with large load current.*

Figure 140. A capacitor filter and output waveforms with small and large loads.

peak voltage, the output of the rectifier begins to decrease until the alternation is completed. During this decrease in applied voltage, the capacitor has a higher voltage than the rectifier-output voltage. As the capacitor cannot discharge back through the rectifier tube, it must release its energy through the load. The values of the capacitor and the applied voltage determine the amount which the capacitor can store. If the load current is small, the capacitor will discharge slowly. (See fig. 140②.) A large load current will cause the capacitor to discharge more rapidly. (See fig. 140③.) This filter, while eliminating some of the ripple voltage from the output of the rectifier system, has several disadvantages. The amount of ripple voltage remaining in the output is greater than can be tolerated in the plate supplies of receivers, amplifiers, and radiotelephone transmitting equipment. Another disadvantage of the capacitor-input type of filter is the heavy current drawn through the rectifier tube. While the capacitor is charging, it draws a current several times that drawn by the load. This charging current plus the load current may be great enough to cause damage to the rectifier tube. The capacitor-input system is not advisable when using the mercury-vapor rectifier tube at high voltages, because the heavy rush of current which charges the capacitor may damage the cathode.

c. A series choke may be added to the simple capacitor filter of figure 140① with an appreciable improvement in the filtering action. Such a capacitor-input filter is shown in figure 141. The inductor, or choke coil, has an iron core, and may be from 10 to 45 henrys in value. Care must be exercised when replacing choke coils in faulty power supplies. A choke coil designed for use on the negative side of the filter system is

not sufficiently insulated to withstand the high voltages which exist between the positive side and ground. Since the entire load current flows through this choke, it should have small resistance to direct current. The choke coil offers high opposition to the pulsations in the current. This property of coil L produces a smoothing effect upon the rectified output, and when combined with shunt capacitor C, an additive smoothing effect is produced. The action of the capacitor when used with the choke is similar to that of the single capacitor filter: capacitor C charges during the increase in voltage until the peak is reached, and the current begins to flow through L to the load at the same time.

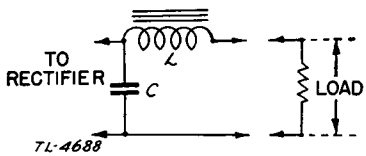

Figure 141. A simple capacitor filter with choke coil.

But the inductance of choke coil L prevents any rapid change in the current flowing to the load and thus helps capacitor C to store energy until the next charge. The complete action of this type of filter is shown in figure 142. The capacitor has become fully charged at A of figure

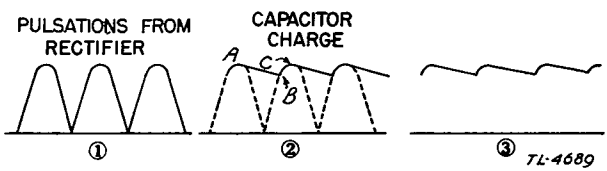

① *Rectifier output.*
② *Capacitor charge and discharge cycle.*
③ *Waveform of filter output.*

Figure 142. Waveforms of filter shown in figure 141.

142② and the input voltage is beginning to decrease. The choke, by its inductive action, opposes any decrease in the load current, and the capacitor, being charged to a higher voltage than the applied voltage, begins to discharge slowly through the coil. But before the capacitor has lost much of its charge, it begins to receive another charge from the next impulse, as shown at B of figure 142②. The capacitor receives energy from the rectifier during the time interval from B to C (fig. 142②), again becoming charged to approximately the peak voltage of the rectified wave. The action of the choke and capacitor for the second alternation of the wave is the same as for the first, and this is repeated for every half-cycle. The output voltage waveform applied to the load is shown in figure 142③.

d. The addition of a second shunt capacitor C_1 across the capacitor-input filter, as shown in figure 143, lowers the ripple output voltage below that of figure 142③. This network, consisting of one choke coil

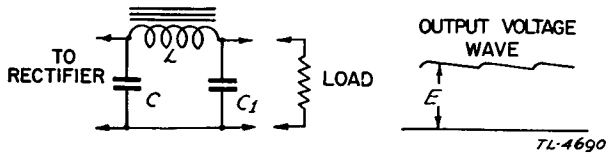

Figure 143. Circuit of a complete capacitor-input filter and waveform of the output.

and two shunt capacitors, is considered one filter section. If a more elaborate system is desired, another section may be added, as shown

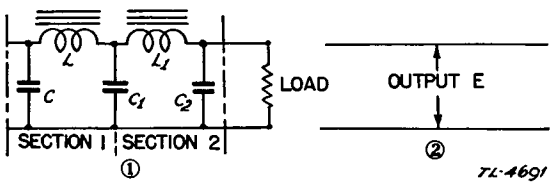

Figure 144. Two-section capacitor-input filter and output waveform.

in figure 144, considerably improving the output voltage to an almost steady condition.

e. The choke-input type of filter, like the capacitor-input filter, may have several different forms. A simple choke-input filter, consisting of a single inductor, is shown in figure 145. The output voltage waveform (across the load) for a given rectifier waveform, is also shown in figure 145. The choke coil offers a high reactance, or opposition, to any

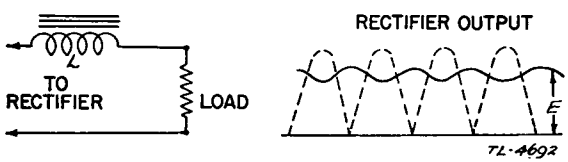

Figure 145. Choke-input filter and output waveform.

change in the current flowing through it. The filter-input voltage increases from zero at the beginning of the input alternation, but the current builds up more slowly than in capacitor-input systems. The coil smooths out some of the ripple voltage by opposing any sudden increase in current flowing through it, and acts to keep the current at a steady value when the output from the rectifier begins to decrease. The coil likewise delays the decrease in current until the second alternation from the rectifier again begins to supply energy to the circuit. The same process is repeated for each succeeding alternation.

f. A single capacitor added to the simple choke-input filter of figure 145, will eliminate more of the ripple from the filter output. The capacitor is placed across the output in parallel with the load, and is known as a single-section choke-input filter. The circuit of a single-

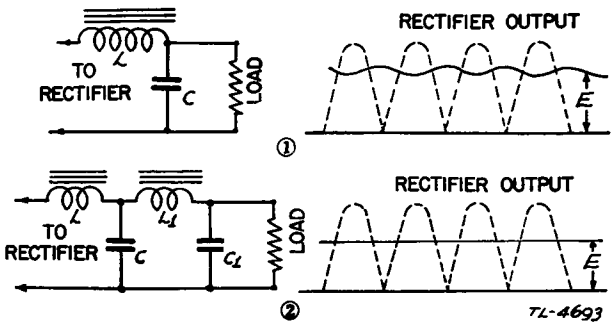

Figure 146 Single-section and two-section choke-input filters, showing input and output waveforms.

section filter is shown in figure 146①, with the voltage output wave (across the load) for a given waveform from the rectifier. A two-section filter, with similar waveforms is shown in figure 146②.

g. The capacitor-input and inductor-input filters have been shown to have about the same effect upon the ripple component of the rectifier-output wave. However, they possess quite different characteristics in another respect. The first capacitor of the capacitor-input filter system is charged to approximately the peak voltage of the rectified alternating current and does not completely discharge between alternations or pulsations. The capacitor remains charged very near to this peak voltage, thereby keeping the output voltage of the filter system at a value comparable to its peak input voltage. For small load currents, the voltage output from the filter will approximate the peak voltage of the rectified alternating current. However, the output voltage drops off rapidly as the load current increases. A capacitor-input filter will give satisfactory service only in applications where the load conditions are reasonably constant, such as a class *A* amplifier, where the average value of current drawn from the power supply does not vary. The output voltage from a power supply using a choke-input filter will be approximately equal to the average value of the rectified a-c voltage. This type of filter finds its greatest use where constant voltage must be maintained under varying load conditions, as is the case with class *B* amplifiers.

90. Bleeders

In most power supply units, the rectifier tube is of the filament type which begins to pass current immediately after it is turned on. The

tubes used in receivers and amplifiers, however, are usually of the indirectly heated type, and do not begin operating as soon as the high voltage is applied. A bleeder resistor places a load on the power supply immediately, thus preventing any high-voltage surge through the unit. In transmitter power supplies, the bleeder serves as a device to maintain a more constant voltage when the transmitter is keyed. The bleeder also serves to discharge the capacitors in the power supply after it has been shut off, thus eliminating any danger of a high-voltage shock to the operator, should he have occasion to repair the equipment.

91. Voltage Dividers

a. The various tubes and the different tube elements require different voltages, which may be obtained by means of a voltage divider connected across the output terminals of the filter. This voltage divider also serves as a bleeder resistor, with the bleeder current usually averaging between 10 and 15 per cent of the total current drawn from the power supply. The currents flowing through the resistor and the value of resistance between the taps determine the division of voltage along the voltage divider. The voltage and current requirements for the load must be determined before the power supply and voltage divider can be designed. Any change in the load current drawn from any particular tap on the voltage divider will affect the voltage distribution of the entire voltage-dividing system.

b. A voltage-divider system typical of those used in modern receivers is shown in figure 147. The voltage divider is connected across the output terminals, *A* and *E*, of the capacitor-input filter, with taps at *B*, *C*, and *D* properly located to provide the voltages shown in the diagram. The taps *A*, *B*, and *C* are at a positive voltage with respect

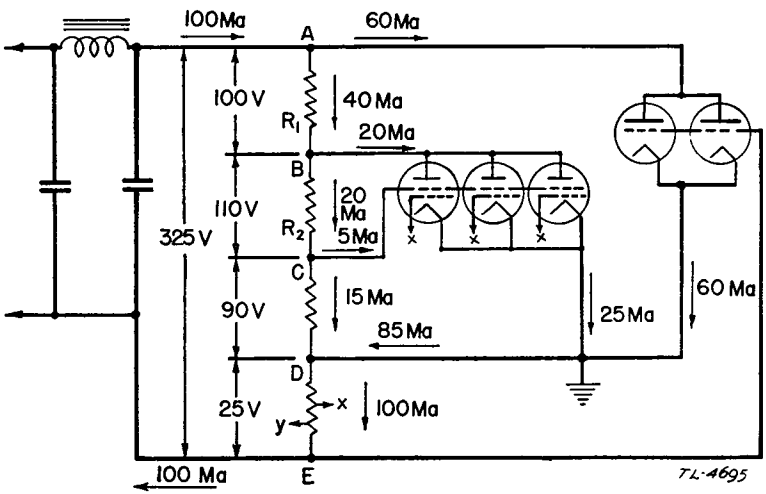

Figure 147. Voltage-divider circuit for radio receiver.

to tap D, which is grounded. The terminal at E is negative with respect to D, and any tap along the resistor between D and E will be negative with respect to ground. In this instance the maximum plate voltage required is 300 volts for the power-output tubes, and the maximum negative voltage is 25 volts for bias to the grids of these tubes. The total voltage of the power supply must therefore be 325 volts. The total current drain for all tubes in this case is 85 milliamperes. To this must be added the bleeder drain 15 milliamperes, making a total current of 100 milliamperes required from the power supply. Figure 147 shows this total of 100 milliamperes flowing from the filter to point A of the voltage divider, where it then divides: 60 milliamperes go to the plate circuit of the output tubes, and the remaining 40 milliamperes pass through the resistor R_1, to point B. The voltage drop across R_1, which is necessary to decrease the filter-output voltage to 200 volts for the plates of the amplifier tubes, must be 100 volts. Hence, to calculate the value of R_1, divide the required drop (100) by the current flowing through R_1, which in this instance is 40 milliamperes. Thus R_1 establishes a voltage of 200 volts between points B and D on the voltage divider. By Ohm's law:

$$R_1 = \frac{E}{I} \text{ or } \frac{100}{.040} = 2{,}500 \text{ ohms}$$

At B the current divides, so that 20 milliamperes is delivered to the amplifier tubes and 20 milliamperes continue through resistor R_2 to terminal C. The resistor R_2 must decrease the voltage from 200 to 90 volts with 20 milliamperes flowing through it. This is a voltage drop of 110 volts and by Ohm's law it is found to be 5,500 ohms. At C the current drain again divides, so that 5 milliamperes is delivered to the screen grid and the oscillator plate circuit. The remaining 15 milliamperes, which is the bleeder current, passes from C to D, causing a voltage drop of 90 volts between C and the grounded tap D. The resistance of the resistor between C and D, again calculated by Ohm's law, is 6,000 ohms. Bias for the r-f and a-f amplifier tubes may be obtained from taps X and Y properly located between D and E, or by resistors in series with the cathode circuits. Power dissipation for each resistor may be calculated by the formulas I^2R or EI. The latter formula is preferable in this particular example, since the voltage across each resistor has already been established. The resistors used should be of proper wattage rating to carry safely whatever current must flow through them, without undue rise in temperature. It has been found that resistors maintain their values and have longer life if they are worked at about 50 percent of their rated power-carrying capacity. The power expanded in resistor R_1 is 4 watts; therefore, it should have a rating of 8 watts to conform to the rule given above. A 10-watt resistor is the closest stock size to this value and is thus the logical choice.

92. Electro-mechanical Power Supplies

Electro-mechanical power equipment includes motor generators, gasoline engine driven generators, hand-driven generators, dynamotors, and vibrator systems. (All of these electro-mechanical power supplies, with the exception of dynamotors and vibrators, are discussed in TM 1–455.) Dynamotors and vibrators are used in radio power circuits where it is necessary to convert a low d-c voltage (such as might be supplied by the ignition battery of a truck, tank, or airplane) to the higher voltages required for receiver and transmitter operation.

93. Dynamotors

a. A dynamotor is used to change a low d-c voltage to a high d-c voltage, thereby fulfilling the requirements of radio receivers and transmitters. It is essentially a motor and a generator mounted, or wound, on a common frame. A single field winding is used to provide the magnetic field for both driving and generating purposes. The armature consists of two windings, both of which are wound on the same armature core, but connected to separate commutators. One winding serves to produce the driving force when energized by a low d-c voltage. The other winding generates a high voltage when rotated within the magnetic field.

b. The functional characteristics of a dynamotor are shown in figure 148. The heavy line indicates the low-voltage motor circuit. Current from the battery flows through the field coils and the motor winding of the armature, setting up a magnetic field around both. These magnetic fields oppose each other and cause the armature to rotate.

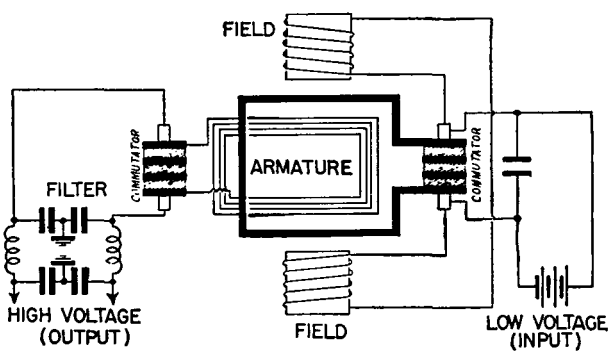

Figure 148. Functional diagram of a dynamotor.

Since the armature and field windings are in parallel this is called a *shunt-wound* motor. With this type of winding the speed of the motor remains fairly constant with changes in the load placed upon it by the generator. The high-voltage winding, represented by the finer lines between the fields (fig. 148) is wound on the same armature so

that it will rotate with the motor winding. When turning, it cuts the lines of force of the common field and generates a voltage which is collected by the brushes at the high-voltage commutator. The greater the number of turns in the high-voltage armature winding the greater will be the voltage output.

c. Filters are placed in the high-voltage leads to filter out high-frequency currents produced by sparking between the brushes and the commutator segments, so that it does not cause interference with radio reception. The filter consists of a combination of r-f chokes and capacitors. The purpose of the chokes is to prevent circulation of the r-f energy through the external wiring. The capacitors bypass this energy to ground. Some additional audio filtering must also be provided to eliminate commutator ripple. This will usually consist of a series inductor of comparatively high value, and a shunt capacitor. Functional characteristics of the audio filter are similar to filtering action discussed under a-c power supplies.

d. The circuit diagram of a typical dynamotor power supply is shown in figure 149. Filter 1 is an r-f unit to eliminate any r-f energy in the

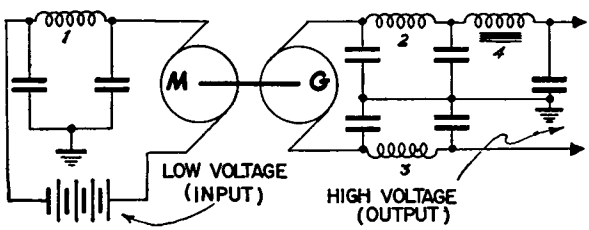

Figure 149. Diagram of dynamotor power supply and filter networks.

low-voltage circuit. *M* is the motor section of the dynamotor and is connected to the battery, which provides driving power. *G* is the generator side of the dynamotor and the output from this unit is fed through the choke coils 2, 3, and 4. Chokes 2 and 3 are r-f choke coils; choke 4 is an iron-core coil. In combination with the capacitors across the line, these chokes serve to prevent radiation of r-f energy and to reduce commutator ripple in the output voltage.

e. The maintenance of dynamotors is important to their efficient operation.

(1) If a dynamotor stops, there may be an open circuit in the motor armature, or the field. As a first step, fuses should be checked in the low-voltage supply circuit.

(2) If the dynamotor runs but no high voltage is present, the trouble is in the generator section of the armature. Fuses in the high-voltage circuit should be checked.

(3) Brushes and commutators may cause trouble if oil or dirt collect on them. Worn brushes should be replaced.

(4) Excessive sparking at the commutator is an indication of commutator trouble. *High mica* is a condition where the copper commutator segments have worn below the strips of mica which separate and insulate them. The remedy is to undercut the mica until it is below the surface of the copper, and sand the commutator smooth. *Do not use emery paper.* Emery dust will short circuit the commutator segments.

94. Vibrator Supplies

a. This type of supply is used to obtain a high d-c voltage from a comparatively low d-c source. A vibrator power supply is much more efficient than a dynamotor and is used extensively. A simple vibrator power supply is illustrated in figure 150; it is nothing more than a simple interrupter similar in many respects to a buzzer, or doorbell.

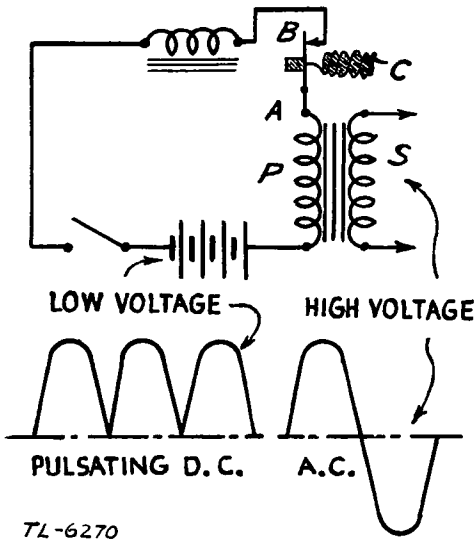

Figure 150. Basic vibrator power-supply system.

The pulsating d-c current is used to energize the primary winding of a transformer which in turn induces an a-c voltage in the secondary. The turns ratio of the transformer windings are proportioned to give the desired output voltage. Referring to figure 150, when the switch is closed, current will flow through the primary of the transformer, through the electromagnet, and then back to the battery. In passing through the electromagnet it will set up a magnetic field drawing the armature *A* over to it. This action breaks the circuit at *B*. As soon as the circuit is broken, the electromagnet will no longer attract the armature, thus allowing the spring *C* to pull it back to the starting position. At the starting position, contact *B* again closes the circuit and the process is repeated. In this way there flows through the primary of

the transformer a pulsating direct current which induces a high voltage in the secondary winding. The output voltage of the secondary is applied to a conventional rectifier and filter network which changes the alternating current back to direct current, but at a new and higher voltage.

b. A more complete circuit diagram of a typical vibrator power supply is shown in figure 151. A better waveform in the output voltage is obtained in this circuit by the use of the center-tapped primary of the transformer. When the primary circuit is closed, the vibrating reed D is drawn down by the electromagnet A until it closes contact B. When this contact closes, a pulse of current flows through the lower half of the primary winding of the transformer. At the same time the electro-

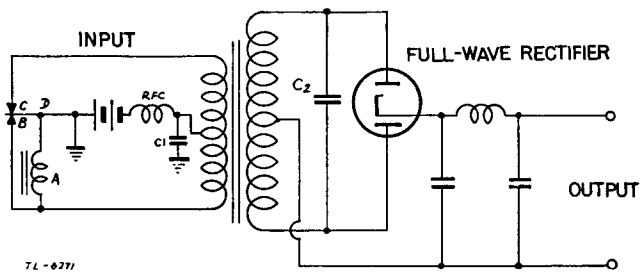

Figure 151. Typical vibrator supply and filter system.

magnet is shorted out by contact B, and loses its attraction for the vibrating reed, thus allowing it to spring back and make contact at C. This contact completes the primary circuit through the upper half of the primary winding and another pulse of current flows. As soon as the reed breaks the connection at B, the current from the battery again can flow through the electromagnet. The electromagnet then pulls the reed down once again, repeating the entire process. Voltage which appears across the secondary will be alternating. Capacitor C_2 smoothes out the surges of current. In order to prevent r-f interference caused by sparking at the points B and C filter choke RFC and capacitor C_1 are placed in the circuit. The entire unit is placed in a metal can to shield nearby sets from any interference caused by the vibrator.

95. Voltage Regulators

a. For certain purposes, such as supplying voltage for the operation of a self-controlled oscillator in a transmitter, or for the high-frequency oscillator in a superheterodyne receiver, constant voltage must be maintained. A satisfactory method of accomplishing this is by means of a gaseous voltage-regulator tube. These vacuum tubes are available for use at a number of different voltages and are designed to maintain a constant voltage drop across their terminals when connected as shown in figure 152①.

b. The operation of voltage-regulator tubes is relatively simple. As the voltage across the tube tends to increase the internal resistance of the tube decreases; thus, more current is drawn through the series-limiting resistor, and the voltage across the tube is maintained at a

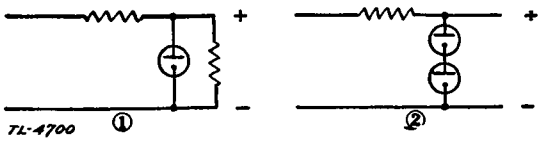

Figure 152. Voltage-regulator circuits.

constant level. Conversely, if the voltage across the tube tends to decrease, the internal resistance increases, less current is drawn through the series-limiting resistor, and again the voltage across the tube remains constant. The starting voltage required to bring the tube to the point of conduction is somewhat higher than the operating voltage. The current necessary to keep the tube functioning is usually about 5 milliamperes, and the maximum current which the tube can pass without injury is approximately 30 milliamperes. These tubes may be used in series to give higher voltages. Such a circuit is shown in figure 152②.

SECTION X

VACUUM-TUBE OSCILLATORS

96. Vacuum-tube Oscillators

a. Oscillators are a necessary part of every transmitter and every superheterodyne receiver. In addition, they are used in signal generators, heterodyne frequency meters, and other instruments used for testing and adjusting radio equipment. Because oscillators are used for many purposes and many frequency ranges, a number of different oscillator circuits have been devised. However, the operation of all vacuum-tube oscillators is fundamentally the same.

b. A vacuum tube may be made to oscillate or generate a-c power because it is able to amplify. To cause an amplifier to oscillate, the output (plate) circuit must be coupled to the input (grid) circuit in such a way that part of the output voltage is fed back and applied to the grid. This signal is amplified and, when it is increased beyond a certain critical point, sustained oscillations result.

c. To produce oscillations in a circuit, two conditions must be satisfied. First, it is necessary that there be feedback from the plate to the grid circuits in such a way as to add to, or reinforce, the voltage on the grid; this is called *positive* or *regenerative feedback.* Second, it is necessary that the feedback be sufficient to transfer enough power back to the grid circuit to overcome any losses in the tuned circuit. The feedback may be accomplished by inductive, capacitive, or resistive coupling. In general, the frequency of the oscillations produced in a circuit depends upon the values of the inductance and capacitance in the circuit. Thus, by using the proper coils and capacitors, it is possible to generate oscillations from the very low audio frequencies to the very high radio frequencies. The vacuum tube itself does not oscillate; the oscillations actually take place in a tuned circuit. The vacuum tube functions as an electrical valve which automatically controls the release of energy into this circuit to maintain oscillations.

97. Principles of Oscillation

a. Alternating-current oscillations can be produced in a simple parallel-tuned circuit, because of the characteristic action of these circuit elements. The manner in which oscillations are produced can best be understood by a study of the *electron flow* in such a closed circuit.

b. An elementary oscillatory circuit is shown in figure 153. Assume that switch *S* is thrown to the left, connecting capacitor *C* across the battery. Electrons will flow from the top plate to the bottom plate of

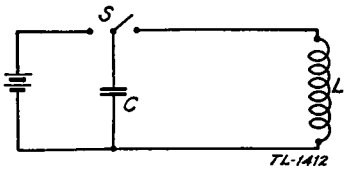

Figure 153. An elementary oscillatory circuit.

the capacitor, making the bottom plate negative. If the switch is then thrown to the right, the extra electrons which have accumulated on the bottom plate will return to the top plate through inductor *L*, thus creating a flow of current, and a magnetic field around *L*. When the extra electrons have left the bottom plate, the charges on each plate are equal. The flow of electrons tends to cease, causing the magnetic field to start collapsing. In collapsing, the field induces a voltage across *L* which aids the flow of electrons to the upper plate, since a magnetic field acts to prevent any change in the flow of electrons. This causes more electrons to leave the bottom plate and accumulate on the upper plate, making it negative with respect to the bottom plate. When the field around *L* has completely collapsed, the flow of electrons to the upper plate stops. The electrons which have accumulated on the upper plate now flow back to the bottom plate, again creating an expanding magnetic field about *L*. When *C* is discharged and the flow of electrons tends to cease, the magnetic field starts to collapse. The collapsing field aids the flow of electrons to the bottom plate, again making it negative with respect to the top plate. Thus, a current oscillates back and forth, alternately charging *C*, first in one direction and then in the other, and producing an alternating voltage across the entire tuned circuit. The oscillating or alternating current has a certain frequency which is determined by the length of time required for the charging and discharging of capacitor *C* through inductor *L*. The larger the values of *C* and *L*, the longer is the required time and, therefore, the lower the frequency.

c. If the oscillatory circuit had no resistance, there would be nothing to impede the flow of the oscillatory current, and the oscillations would continue on indefinitely at the same amplitude. However, since all circuits and circuit elements have some resistance, a portion of the energy of the oscillating current is transformed into heat, which represents a loss of energy. Therefore, with each succeeding cycle, the amplitude of the oscillating current decreases and eventually the current ceases to flow. The smaller the value of the circuit resistance, the greater the number of consecutive cycles for a single impulse of energy;

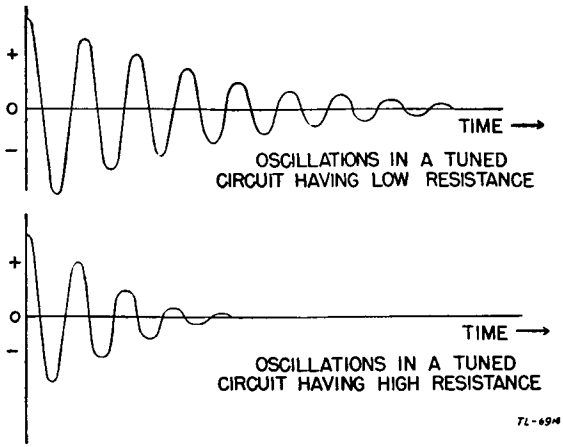

Figure 154. Effect of resistance on oscillations.

but if the circuit resistance is too great, oscillations cannot occur. This effect of resistance in the oscillatory circuit is shown in figure 154.

d. If a vacuum tube is placed in the simple circuit of figure 153 instead of the switch, the energy necessary to maintain oscillations can be more conveniently supplied to the tank circuit. This energy must be

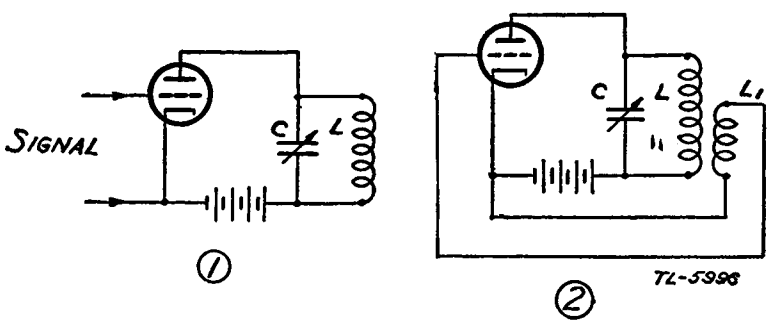

Figure 155. A simple oscillator.

supplied at the correct time, and fed into the grid of the vacuum tube, as shown in figure 155①. The frequency of this signal must be the same as the resonant frequency of the oscillating tank circuit. The circuit of figure 155① serves as an amplifier, and therefore the output in the plate side of the circuit is larger than the input.

e. If another coil, L_1, is placed in the circuit, as shown in figure 155②, a voltage will be induced in that coil. This voltage can now be applied to the grid, and there will be no necessity for an outside signal. The oscillator is now self-supporting and will continue to oscillate as long

as the d-c supply is connected. The frequency is determined by the values of L and C. If the circuit were opened at some point so that oscillations ceased, and the circuit were then closed again, it would start oscillating of its own accord, because any random variations, no matter how small, are rapidly amplified to such a point as to start the circuit oscillating.

f. It has been shown that an oscillator is something like an amplifier, in which a part of the amplified output is fed back from the plate circuit to the grid circuit. In figure 155 the feedback is accomplished by inductive coupling, but any form of coupling can be used, capacitive, or resistive. It is important that the voltage fed back have the correct phase (polarity) and magnitude.

g. Vacuum-tube oscillator circuits usually operate with a high negative grid bias, which permits plate current to flow only during the small part of the cycle where the a-c grid voltage is near its positive crest. Also, the grid of the tube is permitted to draw current. The energy for this grid current must be supplied by the oscillating current in the inductance-capacitance tank circuit. This disadvantage of supplying grid circuit losses from the oscillating current is more than balanced, however, by the high values of plate current which result and the increased efficiency in the conversion of d-c into a-c energy.

h. Vacuum-tube oscillators may be divided into two main classes: *self-controlled oscillators* (also called self-excited oscillators), and *crystal-controlled oscillators.*

98. Frequency of Oscillations

The frequency at which oscillations take place in a vacuum-tube oscillator is determined by the resonant frequency of the tuned circuit. The approximate frequency of oscillations may be determined by the relation:

$$F = \frac{1}{2\pi\sqrt{LC}}$$

where F = cycles per second (approximate frequency of oscillations),
L = henrys,
C = farads.

By simple mathematical analysis, *decreasing* any factor in the denominator (other factors remaining constant), *increases* the value of the fraction. Conversely, *increasing* any factor in the denominator (other factors remaining constant), *decreases* the value of the fraction. Thus, in the above formula, decreasing either L or C causes an increase in the frequency of oscillations; increasing either L or C causes a decrease in the frequency of oscillations.

Example: Determine the frequency of oscillations in the circuit of figure 155② when $L = 16$ microhenrys and $C = 100$ micromicrofarads. Converting to proper units for the formula:

$$16 \quad \mu h = 0.000016 \text{ henrys}$$
$$100 \quad \mu\mu f = 0.0000000001 \text{ farads}$$

Then

$$F = \frac{1}{2\pi\sqrt{LC}}$$
$$= \frac{1}{6.28 \times \sqrt{0.000016 \times 0.0000000001}}$$
$$= \frac{1}{6.28 \times 0.00000004}$$

3,980,895 cycles per second, *approximate frequency.*

99. Self-excited Oscillators

a. The *tickler-coil oscillator* (fig. 156) is the simplest type of oscillator circuit. Coil L and capacitor C are in the grid circuit. The feedback from plate to grid is accomplished by means of the inductive coupling between the tickler coil L_P and the grid coil L. The frequency

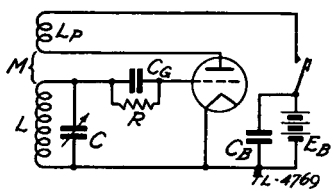

Figure 156. Tickler-coil oscillator.

of oscillation is the resonant frequency of the tuned circuit LC. The grid current flowing through the resistor R (grid leak) provides the proper negative grid bias. Capacitor C_G bypasses the r-f currents around the high resistance R and helps to keep the bias constant. The values of R and C_G are chosen so that the grid is biased negatively to a considerable extent with respect to the cathode. Practically all oscillators use grid-leak bias because these are more stable than separately biased oscillators. Capacitor C_B is a r-f bypass around the plate battery E_B. When an oscillator circuit is oscillating, there will be grid current flowing for part of each cycle. Thus, a test for the proper operation of an oscillator is to measure the grid current or the grid-bias voltage. If these values are zero, the circuit is not oscillating. However, in measuring the grid voltage, a high-resistance voltmeter, such as a vacuum-tube voltmeter, must be used. Otherwise, erroneous readings will result.

b. The circuit of the tickler coil may be slightly rearranged in the manner shown in figure 157. When this is done the circuit is called a series-fed *Hartley oscillator.* In this circuit a single coil is used, part of which is in the plate circuit and part of which is in the grid circuit. Capacitor C is connected across the entire coil. The resonant frequency

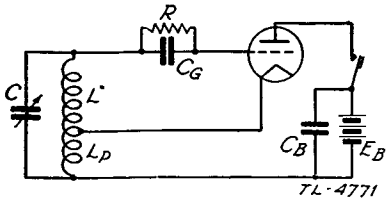

Figure 157. Series-fed Hartley oscillator.

is determined by the values of C, L, and L_P. The feedback is due to inductive coupling between L and L_P. The amount of feedback can be controlled by varying the position of the cathode tap. This is called a *series-fed* circuit because the d-c plate current flows through the plate coil L_P, which is in series with the d-c plate voltage.

c. In some cases it is desirable to arrange the circuit so that the plate current does not flow through the plate coil, and any possibility of the plate coil and capacitor being in contact with high plate voltage is

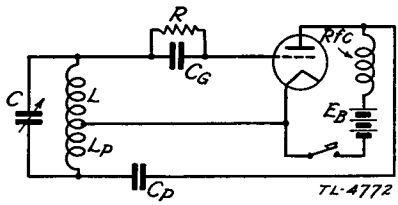

Figure 158. Parallel-fed Hartley oscillator.

removed. This may be done by using *parallel feed* (sometimes called *shunt feed*). A parallel-fed Hartley oscillator is shown in figure 158. Capacitor C_P allows the alternating current to flow into the tuned circuit, but blocks the direct current and prevents the coil from short-circuiting the battery. A r-f choke coil prevents the battery from short-circuiting the alternating current.

d. The *Colpitts oscillator* (fig. 159) is essentially the same circuit as the Hartley, except that a pair of capacitors in series, C_1 and C_2,

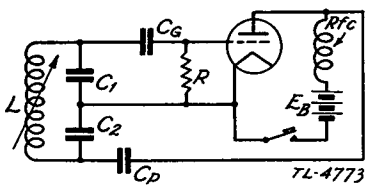

Figure 159. Colpitts oscillator.

are used in place of the cathode tap. This type of feedback is called *capacitive feedback.* Tuning is usually accomplished by varying the inductance of L, and a variometer is generally used for this purpose.

The coil could be fixed, however, and the tuning varied by means of capacitors C_1 and C_2, in which case they would be variable and ganged. Since the cathode is connected to the midpoint of two capacitors, there is no d-c path through the oscillator circuit, and shunt feed must be used. Therefore, the grid-bias resistor R must be connected directly to the cathode to provide the d-c grid bias.

e. The tuned-plate tuned-grid oscillator shown in figure 160 has a tuned circuit in both the plate and grid circuits. The feedback of

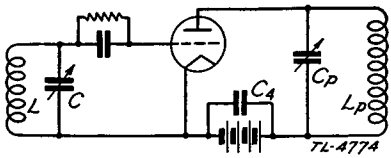

Figure 160. Tuned-plate tuned-grid oscillator.

energy from the plate to the grid, necessary to sustain oscillations, is accomplished by the plate-to-grid interelectrode capacitance. Both the plate and grid circuits are tuned to approximately the same frequency.

f. An oscillator circuit is usually required only to control the frequency, and not to deliver any appreciable amounts of power. Power is developed by amplification in the succeeding circuits, where load changes have a much smaller effect on the frequency. This is discussed in detail in paragraphs 102 and 103. The electron-coupled oscillator combines the functions of both oscillator and power amplifier in one tube. A typical circuit using an electron-coupled oscillator is shown in figure 161. The cathode, control grid, and screen grid form a series-fed Hartley oscillator with LC as the oscillatory circuit. The screen of the tube acts as the plate of the Hartley-oscillator circuit. Capacitor C_S bypasses the r-f current around the battery and places the screen at r-f ground potential (the negative terminal of the battery being considered as ground). The ground connection then serves as the return circuit for r-f energy from the screen to the oscillatory circuit LC. The

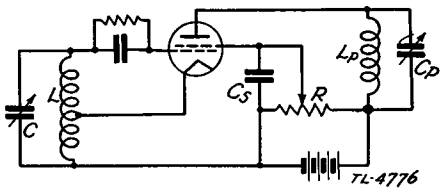

Figure 161. Electron-coupled oscillator.

output circuit L_PC_P is connected to the plate. Since the electron stream is the coupling medium between the oscillator and the load, and since the screen which is at r-f ground potential serves as a shield between the circuits; this oscillator is very stable, and load variations have little

effect on frequency change. Another factor which aids the stability of the electron-coupled oscillator is that an increase in screen voltage will decrease the frequency, while an increase of plate voltage will increase the frequency. Thus by properly adjusting the tap on resistor *R*, which is the voltage divider supplying screen voltage, the frequency of the electron-coupled oscillator can be made substantially independent of supply voltage variations. Voltage variations would cause the frequency of the previously discussed oscillators to shift. In figure 161, L_PC_P forms a tuned oscillatory circuit in the plate or output circuit. When the output circuit is tuned to a frequency which is a multiple of the natural frequency of the oscillator, this circuit gives frequency multiplication. The multiple of the original (natural) frequency is called the *second harmonic* if it is twice the frequency of the original oscillator frequency, and the *third harmonic* if it is three times the original frequency.

g. The frequency of oscillations generated by the oscillators previously described is affected considerably by changes in load, supply voltages, or temperature. This variation in frequency is very small in electron-coupled oscillators, but is still objectionable in certain radio circuits. Where precision frequency control is important, crystal-controlled oscillator circuits are employed.

100. Crystal-controlled Oscillators

a. When it is desired to hold the frequency of an oscillator to a certain definite value, a crystal-controlled oscillator is used. This type of oscillator depends for its action upon a crystal, usually of quartz.

b. Certain crystalline substances, such as quartz, Rochelle salts, and tourmaline, exhibit a most interesting property. If a mechanical force is applied to one of these substances, a voltage is developed. Conversely, if the substance is connected to a source of alternating voltage, the substance undergoes a change in its physical shape resulting in mechanical vibrations. This relationship between mechanical and electrical effects is known as the *piezo-electric effect*. Although many substances exhibit piezo-electric properties, quartz is the most suitable for crystal oscillators.

c. Quartz crystals used in oscillator circuits must be cut and ground to extremely accurate dimensions. A typical finished quartz crystal is shown in figure 162②. The dimensions for such a crystal resonant at 1,000 kilocycles would be approximately 1 by 1 by 0.1125 inch. Electrical contact with the quartz-crystal plate is obtained by a special crystal holder, which has two metal plates (between which the crystal is mounted), and a spring device which places mechanical pressure on the metal plates. A dismantled holder is shown in figure 162①, and a view of a complete crystal and holder is shown in figure 162③. Another type of crystal holder is shown in figure 162④.

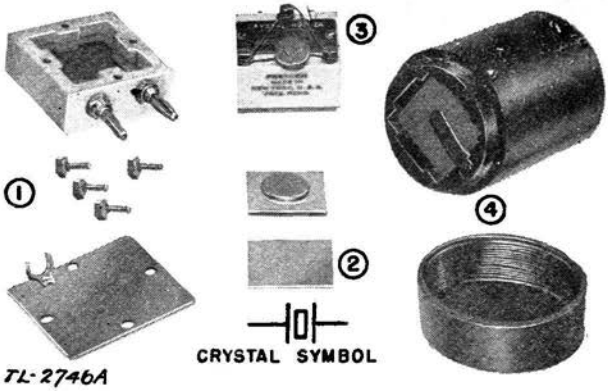

① *Dismantled crystal holder.*
② *Finished quartz crystal.*
③ *Crystal mounted in holder.*
④ *Crystal holder.*

Figure 162. Typical crystals and holders.

d. In addition to the dimensions of a quartz crystal, which determine its resonant frequency, there is a further classification of crystals, which depends on the manner in which the crystal was cut from the original raw crystal. Three cuts are shown in figure 163. Temperature

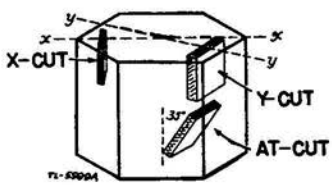

Figure 163. Some crystal cuts.

has a different effect on each of these cuts. The X-cut crystal has a negative temperature coefficient; that is, as the temperature increases, the crystal frequency decreases. The Y-cut crystal has a positive temperature coefficient; the crystal frequency increases with an increase in temperature. Both the X-cut and the Y-cut crystals have been almost entirely superseded by crystals having zero (or nearly zero) temperature coefficient, such as the AT-cut crystal.

e. When a crystal starts vibrating at its resonant frequency, it will take only a small force of the same frequency to obtain vibrations of a large amplitude. The mechanical resonant frequency of a crystal depends chiefly upon its thickness. When an alternating voltage is applied to a crystal which has the same mechanical frequency as the voltage applied, it will vibrate, and only a small voltage need be applied to the crystal to keep it vibrating. In turn, the crystal will generate a large voltage at its resonant frequency. If this crystal is

placed between the grid and cathode of a vacuum tube, and a small amount of energy is taken from the plate circuit and applied to the crystal to keep it vibrating, the circuit will act as an oscillator. The natural frequency of the crystal is critical. At a frequency slightly higher or lower, the amplitude of the crystal vibrations is almost zero, and when the crystal stops vibrating it produces no voltage. Thus the frequency of a crystal-controlled oscillator must be the same as that of the crystal; otherwise, it will not oscillate at all.

f. A crystal-controlled oscillator stage using a triode tube is shown in figure 164. This is the same circuit as the tuned-plate tuned-grid oscillator circuit, with the crystal replacing the tuned-grid circuit. From this, it can be seen that a crystal is similar to a parallel-resonant

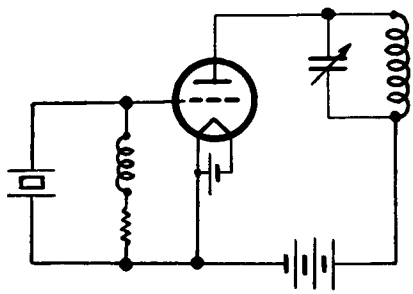

Figure 164. Crystal-controlled oscillator using triode tube.

circuit. The feedback takes place through the plate-to-grid capacitance within the vacuum tube. The oscillations occur at the resonant frequency of the crystal, and the plate circuit is tuned approximately to this frequency. The plate circuit should not be tuned exactly to the crystal frequency, since this would result in erratic and unstable operation h, below. During oscillation, the crystal vibrates at its resonant frequency. The strength of these vibrations depends upon the voltage being fed back to it. If the feedback is too great, the vibrations may become strong enough to damage the crystal (the crystal will crack or break). The use of a tetrode or pentode tube overcomes this difficulty, since the plate-to-grid capacitance is reduced by the screen grid. Oscillations will still be generated because tetrodes and pentodes are more sensitive than triodes and require less grid voltage for satisfactory operation.

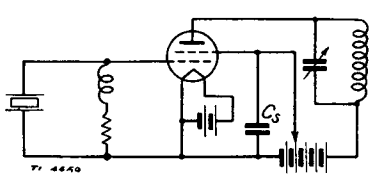

Figure 165. Crystal-oscillator circuit using tetrode tube.

g. A crystal-controlled oscillator using a tetrode is shown in figure 165. If a pentode had been used, the circuit would be exactly the same, except that the suppressor grid would be connected to the cathode or to the ground. Circuits similar to that of figure 165 are the most satisfactory for frequency control of multistage transmitters.

h. In the adjustment of a crystal oscillator, the factor of stable operation is to be considered. If, in figure 165, a d-c milliammeter is placed in the battery lead to the plate tank circuit, and the tuning capacitor is then changed from a low value to a high value (from a high frequency to a low frequency), the plate current would slowly decrease to a *minimum* and then suddenly jump to a *maximum,* at which time oscillation would cease. This procedure is shown in figure 166.

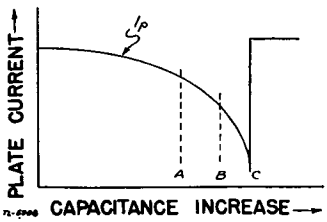

Figure 166. Crystal-oscillator plate-current tuning curve.

At point *C* the plate circuit is tuned to the resonant frequency of the crystal, and the output of the plate tank circuit is maximum (minimum d-c current indicates a maximum a-c output). The oscillator tank circuit is not stable if operated at point *C*: any slight change in the loading conditions may cause the oscillator to drop out of oscillation. The oscillator is usually operated at the region between *A* and *B* on the plate-current curve. (See fig. 166.)

i. A *Pierce crystal oscillator* is a special type of crystal-controlled oscillator which requires no tuning control. The circuit for a Pierce oscillator is shown in figure 167. The crystal is connected directly

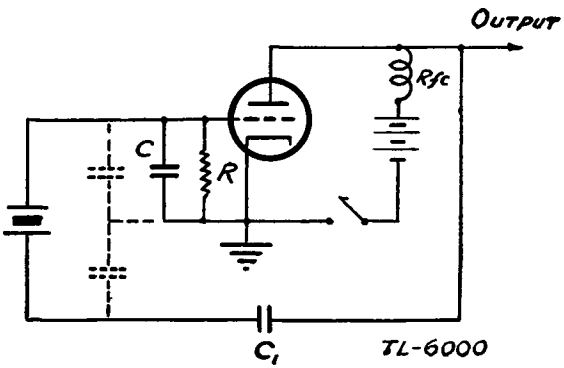

Figure 167. Pierce crystal oscillator.

from plate to grid. The circuit may be considered the equivalent of a Colpitts oscillator with the tuned circuit replaced by the crystal and the voltage division accomplished through the plate-to-filament and grid-to-filament capacitance of the tube. These capacitances are represented by the dotted lines in figure 167. The amount of feedback depends upon the grid-to-cathode capacitance. A fixed capacitor C is connected between the grid and cathode to provide the proper amount of feedback for the tube and frequency used. This capacitance is not critical and, ordinarily, it is not necessary to change the capacitor when changing bands. Capacitor C_1 keeps the d-c voltage off the crystal and provides an r-f path. Resistor R is the grid-leak resistance. The chief disadvantage of this oscillator is low output.

j. The care and treatment of quartz crystals is very important for their efficient operation. In most crystal oscillators, it will not be necessary to disturb the quartz crystal. When the crystal refuses to oscillate and no other indications of trouble are evident, however, it may be necessary to remove the quartz crystal from the holder in order to clean it. Carbon tetrachloride is one of the best cleansing agents. Soap and water is also effective for cleaning, but considerable care must be exercised, since a more vigorous scrubbing action is necessary. After cleaning, the crystal should be washed and then dried with a clean, lint-free cloth. Do not allow the fingers to come into contact with the faces of the crystal, since oil or dirt from the fingers may prevent the crystal from oscillating. Handle the crystal by grasping it on the edges. Since it is very fragile, the quartz plate should never be dropped.

SECTION XI

CONTINUOUS-WAVE TRANSMITTERS

101. C-w Transmission

a. The function of a radio transmitter is to supply power to an antenna at a definite radio frequency, and to convey intelligence by means of the signal radiated. Radio transmitters radiate waves which may be either of two types. One type is the *continuous wave,* or *unmodulated wave,* whose waveform resembles the r-f current oscillating in the tuned tank circuit of a vacuum-tube oscillator. In this type, the peaks of all cycles are equal and even, and there is nothing to distinguish one cycle from the next. The other type of radio wave is the *modulated wave* (described in section XII and XIV), in which the amplitudes of the peaks vary from cycle to cycle. The continuous wave is used only for radiotelegraphy, that is, the transmission of short or long pulses of radio frequency to form the dots and dashes of Morse code.

b. The four essential components of a radiotelegraph or c-w transmitter are:

(1) A generator of r-f oscillations.

(2) A means of amplifying these r-f oscillations.

(3) A method of turning the r-f output on and off in accordance with the code to be transmitted (known as *keying*).

(4) An *antenna* to radiate the keyed output of the c-w transmitter.

102. Power Amplifiers

a. If a vacuum-tube oscillator is connected directly to an antenna there will be some radiation of radio waves. However, since r-f currents in the oscillator circuit are relatively weak, very little power can be delivered to the antenna. The radiated wave, therefore, will be quite weak. Furthermore, putting a heavy load such as an antenna on the oscillator will vary the frequency to which the oscillator is tuned. For these reasons, it is necessary to send the oscillations through an r-f amplifier before the signal is radiated from the antenna. The r-f amplifiers used in c-w transmitters are generally class *B* or class *C* power amplifiers, since an antenna radiating power requires a power amplifier to replenish the energy radiated.

b. A transmitter circuit containing an oscillator coupled to an amplifier, or amplifiers, is called a master-oscillator power-amplifier

(m-o-p-a) circuit. Such a transmitter circuit is shown in figure 168. Starting at the signal source of the amplifier it can be seen that the signal oscillations are fed to the grid of the amplifier tube through

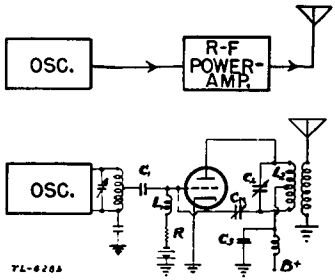

Figure 168. Master-oscillator power-amplifier transmitter.

capacitor C_1. This capacitor serves two purposes. It transfers the r-f energy and blocks the d-c voltage of the oscillator tank circuit from the grid of the amplifier. The r-f choke L_1 prevents the r-f energy from flowing to ground. Resistor R is the grid-bias resistor. The plate delivers the amplified-signal currents to the tank circuit L_2C_2 in the form of short pulses or current peaks at the signal frequency, which is characteristic of all class C amplifiers. If there were no tuned plate circuit, these pulses would produce an output so distorted as to seem totally different from the original signal, for only part of the signal cycle is present in the plate-current peaks. From the discussion of the oscillatory circuit in section X, it will be recalled that when the tank circuit L_2C_2 is tuned to the resonant frequency, the plate-current peaks will reinforce the tuned circuit at just the right instant, causing the current in the tuned circuit to surge back and forth in time with the input signal. At any other frequency but the resonant frequency, this would not happen. These surging currents give the tank circuit the so-called *flywheel effect,* which results in the tuned circuit making up the portion of the sine wave missing in the plate current pulses. The tube acts merely to supply the necessary power at just the right time.

c. If the amplifier in figure 168 is adjusted so as to amplify the signal frequency of the oscillator, the plate tank circuits of the oscillator and the amplifier will both be tuned to the same frequency. The amplifier stage has a tuned input circuit (the oscillator-plate tank) and a tuned output circuit (the amplifier-plate tank) adjusted to the same frequency; thus the amplifier resembles a tuned-plate tuned-grid oscillator. Unless some precaution is taken to prevent it, the amplifier will break into oscillation, causing a very unstable operating condition. From the discussion of a regenerative oscillator, it will be recalled that the correct phase relationship must exist between the input and the output circuits. But if the tickler or plate coil is reversed, voltage will be fed back, out

of phase, causing degeneration and stopping oscillation. This is what is done in an amplifier to keep it from breaking into oscillation. In figure 168 note that L_2 is center-tapped. High voltage is applied to the tank circuit through the r-f choke coil which is bypassed by capacitor C_3, thus placing the center tap at r-f ground potential. When r-f currents flow through the upper half of the winding of L_2 and C_3 to ground, the lines of force, or magnetic field, induces a voltage in the lower half which is always out of phase with that in the upper half. Thus, a small amount of voltage is taken from the bottom of L_2 through capacitor C_N, and fed to the grid. By varying the adjustable capacitor C_N the correct amount of out-of-phase voltage can be fed back to balance the voltage normally fed back through the interelectrode capacitance of the tube and thus prevent any possible oscillation. This process is called *neutralization,* and C_N is known as the *neutralizing capacitor.*

d. The output of the power amplifier is usually inductively coupled to the antenna circuit by means of an r-f transformer. (See fig. 168.)

103. Buffer Amplifiers

a. The power amplifier shown in figure 168 is a class *C* amplifier, which means that power must be furnished by the oscillator to drive the amplifier. If it is desired to key the amplifier, a varying load will be placed on the oscillator, resulting in frequency instability.

b. To overcome this disadvantage when extreme frequency stability is required, a buffer amplifier is added to the transmitter circuit. (See

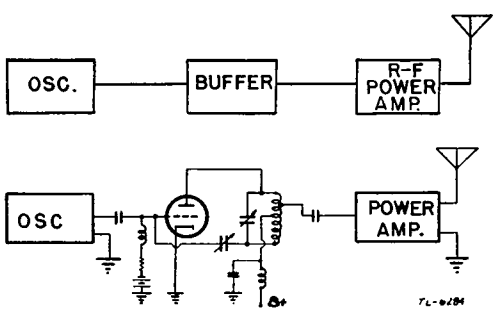

Figure 169. Diagram of transmitter using buffer amplifier.

fig. 169.) The purpose of this buffer stage is to isolate the oscillator from the varying load caused by keying. Very little amplification is desired in this buffer stage, the chief requirement being isolation, not amplification. The ideal buffer stage is a class A amplifier, since only voltage is required on its grid. But any type of amplifier can be employed; that shown in figure 169 is class *B* or class *C,* since it uses a grid-resistor bias.

104. Bias Methods

a. All of the bias methods employed in receivers can also be used in transmitters. However, due to power-output requirements, class *B* or class *C* amplifiers are used most frequently. The employment of class *B* or class *C* amplifiers permits the use of grid-resistor bias. This type of bias is not usually used in receivers, since most stages in a receiver operate in class *A*, in which case no grid current flows.

b. Grid-resistor bias is invariably used in the amplifier stages of radio transmitters. The grid-cathode circuit of the amplifier tube acts in the same way as the plate-cathode circuit of an ordinary diode. Current will flow when the grid is driven positive on signal-voltage peaks. The voltage developed across the grid-bias resistor consists of a series of pulses of direct current, and if a filter capacitor is placed across this resistor, a comparatively steady value of d-c voltage will be made available. The polarity of this voltage will make the cathode end of the resistor positive and the grid end of the resistor negative. Thus, it can be said that the grid has a negative bias; but as long as the positive peaks of the input-signal cycle exceed the bias voltage, the plate will draw current on these peaks and bias will continue to be developed.

105. Transmitter Vacuum Tubes

a. Very little difference exists between vacuum tubes used in receivers and those used in transmitters, except for size. Since most transmitter tubes are power tubes, designed to amplify high voltage and heavy current, they must be of much larger and heavier construction.

b. The plate dissipation of a tube is the difference between the plate-power input and the power output. If this dissipation is greater than normal, the plate will become very hot, sometimes glowing with a red color from this heat. If the heat becomes intense, gases may develop within the tube, making it unsatisfactory for further use. A transmitter should not be operated for any period of time if the plates of the tube become red, unless the service manual for the set states this to be a normal operating condition. Loss of bias, insufficient grid excitation, or improper tuning may cause overheating of a transmitter tube.

106. Neutralization

a. *Neutralization* is the process of balancing the voltage fed back by the interelectrode capacitance of the tube with an equal voltage of opposite polarity. Dividing the plate circuit, so that the neutralization voltage is developed across part of it, is called *plate neutralization.* Developing the neutralizing voltage in the grid circuit is called *grid neutralization.* The necessity for neutralizing r-f amplifiers to prevent them from oscillating was explained in paragraph 102c.

b. A typical transmitter with a neutralized amplifier is shown in

figure 170, where the amplifier-tube interelectrode capacitance is indicated by dotted lines. The actual process of neutralization can be carried out in a number of ways.

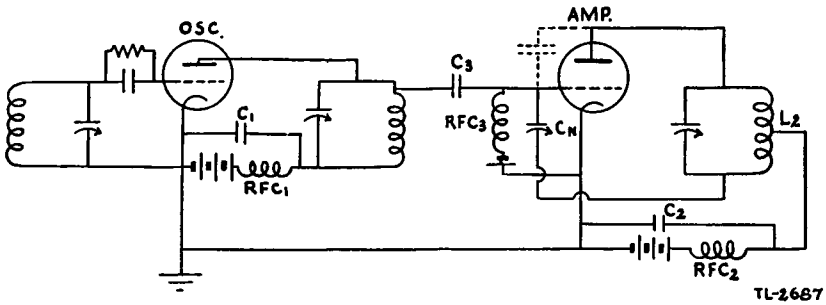

Figure 170. Transmitter with neutralized amplifier.

c. Where it is possible to remove the plate voltage from the amplifier stage, neutralization can be accomplished in the following manner. With excitation present at the grid of the amplifier, the plate voltage is removed from the stage. If there is a milliammeter in the amplifier-grid circuit, the neutralizing capacitor is adjusted until there is no change of grid current when the amplifier plate circuit is tuned through resonance. If there is no milliammeter in the grid circuit, a test for neutralization may be made by determining whether or not any r-f voltage is present in the amplifier plate circuit. A neon glow bulb, a loop of wire attached to a small flashlight bulb, or a sensitive r-f galvanometer loosely coupled to the tank, should show no r-f voltage when the stage is properly neutralized. Also, if there is no reaction on the plate and grid currents of the exciting stage as the amplifier is tuned through resonance, the stage is properly neutralized.

d. In some transmitter circuits it is more convenient to turn off the filament voltage on the amplifier stage instead of removing the plate voltage. If this is done, the process of neutralization is carried out in the same manner as above.

e. To obtain complete neutralization, the transmitter must be designed so that there is no coupling between the input (grid) and output (plate) circuits of the amplifier stages, other than through the interelectrode capacitance of the tubes. The input and output inductors must be electromagnetically shielded from each other, or placed at right angles to each other, so that their fields cannot interact. The wiring and arrangement of the component parts must be such that stray capacitive or inductive coupling is at a minimum.

f. Cross neutralization of a push-pull amplifier is accomplished as shown in figure 171①. The plate of tube 1 is joined with the grid of tube 2 through a neutralizing capacitor; and the plate of tube 2 is joined with the grid of tube 1 through another neutralizing capacitor. The

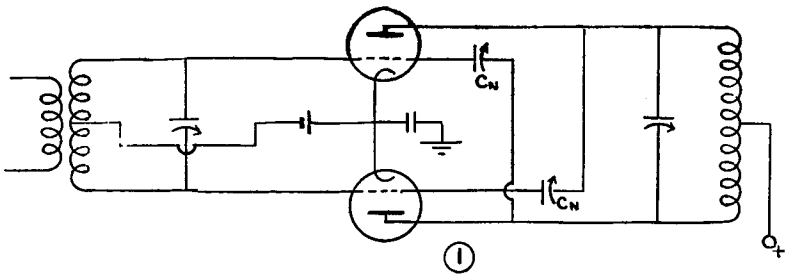

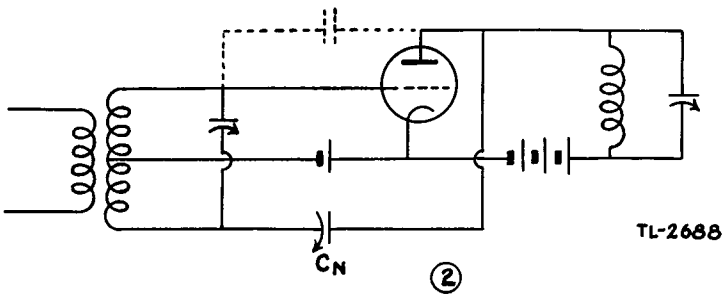

① *Push-pull stage neutralization.*
② *Rice system of neutralization.*
Figure 171. Neutralization circuits.

r-f voltage across each neutralizing capacitor counteracts the r-f voltage across the interelectrode capacitance of the tube to whose grid it is connected.

g. A special method of amplifier neutralization known as the *Rice system* is shown in figure 171②. This arrangement is similar to that of figure 170, except that the Rice system utilizes a split-input circuit in place of a split-output circuit.

h. The use of well-shielded tetrode or pentode tubes obviates the necessity of neutralizing, as the plate and grid are shielded from each other by the screen grid. However, the overall efficiency of these tubes is not as great as triodes, since there is a screen-grid power loss. The high impedance of such tubes makes them more suitable for voltage amplifiers than for final output stages, where power output is the prime factor. Low-excitation requirements make tetrodes and pentodes especially suitable as intermediate stages of a transmitter.

i. A typical crystal-controlled oscillator, followed by a buffer or driving amplifier using a tetrode and a triode power amplifier, is shown in figure 172. The crystal oscillator is a conventional pentode circuit which provides sufficient output to excite the intermediate tetrode amplifier. The excitation is taken from a tap on the oscillator inductor, since the tetrode is comparatively easy to excite for full output. This

places a light load on the oscillator, which prevents instability, even though the intermediate amplifier may be keyed. Capacitor C_1 bypasses the cathode to ground. This prevents any r-f voltage from being

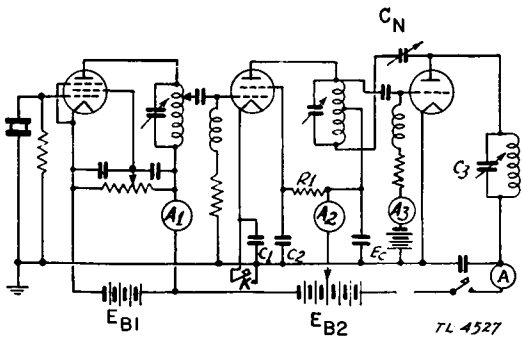

Figure 172. Crystal-controlled oscillator, tetrode driving amplifier, and triode final amplifier.

developed in the keying leads, which might cause regeneration and possible oscillation. Resistor R_1 is a dropping resistor which reduces the voltage to the proper value for the screen grid. Capacitor C_2 is the screen grid bypass, and it places the screen grid at ground potential for r-f, thus electrostatically shielding the grid from the plate. This prevents any feedback within the tube, and does away with the necessity of neutralizing this stage. The final amplifier is neutralized by capacitor C_N, utilizing a grid neutralizing circuit. With excitation applied to the grid of the final amplifier, C_N is adjusted to such a position that tuning the plate circuit capacitor C_3 through resonance causes no deflection in the grid-current reading on milliammeter A_3.

107. Frequency Multipliers

a. Since the natural resonant frequency of a crystal is proportional to the size and thickness of the crystal plate (that is, the thinner the crystal the higher the frequency) there is a physical limit to the thickness a crystal can be ground and, therefore, a limit to the highest resonant frequency of the crystal. If it is necessary to operate the radio transmitter on a frequency much higher than that obtainable with a crystal, frequency multipliers are used.

b. Frequency multiplication is made possible by the fact that if a vacuum tube is operated in a certain manner, harmonic distortion is developed in the plate circuit. A harmonic is a multiple of the original or fundamental frequency. Thus, the second harmonic is twice the fundamental, the third harmonic is three times the fundamental, and so on. Ordinarily harmonic distortion is to be avoided in an amplifier circuit, because the distortion alters the waveshape of the original signal. However, when frequency multiplication is required, the signal

is deliberately distorted to form strong harmonics, and the desired harmonic frequency is selected with a properly tuned circuit.

c. Since the output of a class *C* amplifier is greatly distorted, frequency multipliers are generally operated in this manner. In fact, the tubes of some frequency multipliers are biased far more negatively than an ordinary class *C* amplifier, in order to introduce the greatest possible distortion. The higher the grid bias, however, the greater the grid excitation, or drive, required. The plate tank circuit is tuned to the harmonic desired, while the grid circuit is tuned to the fundamental frequency. The flywheel effect of the plate tank circuit will make up the remaining portion of the sine wave of the harmonic-frequency peaks furnished by the vacuum tube. This is the same effect described in paragraph 102b.

d. Three important conditions must prevail in order to obtain an efficient frequency multiplier: high grid drive or excitation, high grid bias, and a plate tank circuit tuned to the desired harmonic. If the second harmonic is selected, the circuit is called a *frequency doubler;* if the third harmonic is used, the circuit is called a *frequency tripler,* and so on.

e. If an amplifier is operated on the fundamental frequency, it requires neutralization, because the plate and grid circuits are tuned to the same frequency. However, if the circuit is operated as a frequency multiplier it does not require neutralization, since the plate and grid circuits are not tuned to the same frequency.

f. Certain amplifier circuits are suited to the generation of even harmonics and others to the generation of odd harmonics. A push-pull circuit has the ability to produce only odd harmonics (third, fifth, seventh, and so on). Even-order harmonics can be produced by a push-push amplifier similar to the circuit shown in figure 173.

g. In a push-push amplifier (fig. 173), the grids are connected in push-pull, and consequently are 180° out of phase. When the exciting

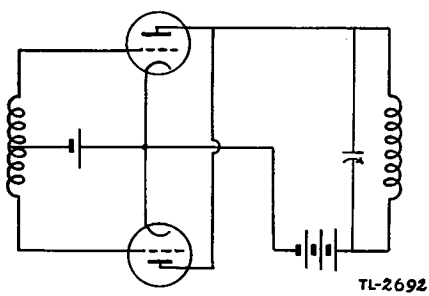

Figure 173. Push-push amplifier.

voltage on one grid reaches its maximum positive peak, the other grid is at maximum negative potential, and the second alternation of the

cycle reverses the respective grid potentials. Thus, pulsating plate current flows first in one tube and then in the other. By connecting the plates in parallel, the output impulses are in the same direction, and the tank circuit receives two impulses for each cycle of excitation.

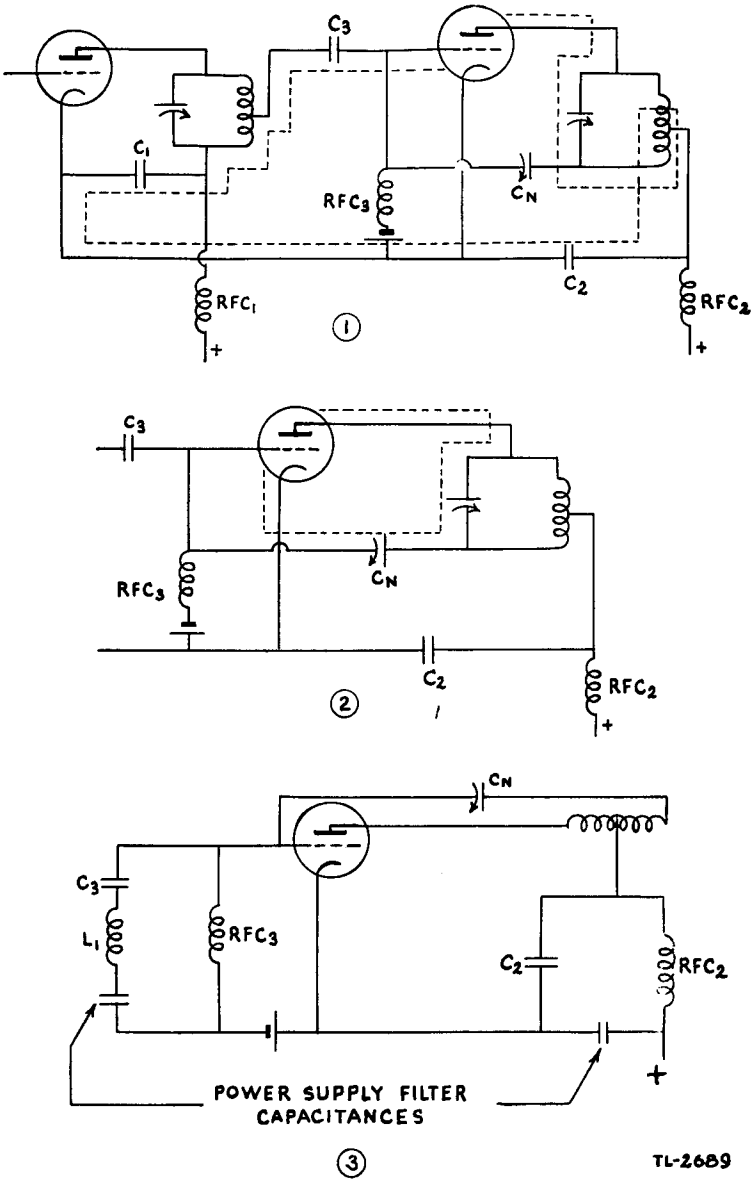

① *High frequency.*
② *Ultra-high frequency.*
③ *Low frequency.*

Figure 174. Parasitic oscillatory circuits in transmitter shown in figure 170.

Push-push doublers do not depend on tube-distortion characteristics, and are capable of greater output and higher plate efficiency than a distortion-type amplifier used for doubling. The normal power output of an amplifier when operated as a frequency multiplier is less than when operated at the fundamental frequency.

108. Parasitic Oscillations

Circuit conditions in an oscillator or amplifier may be such that *secondary* oscillations occur at frequencies other than that desired. Such oscillations are appropriately termed *parasitic oscillations,* and are to be avoided. The energy required to maintain parasitic oscillations is wasted so far as useful output is concerned. A circuit afflicted with parasitics has low efficiency and frequently operates erratically. Figure 174 shows some of the incidental circuits which may give rise to parasitics in the transmitter circuit of figure 170. The dotted lines in figure 174① outline a high-frequency circuit, and those of ② outline an ultra-high-frequency circuit. That part of the transmitter which constitutes a possible low-frequency parasitic circuit is shown in ③. Parasitic oscillations can be suppressed by placing resistors or r-f chokes at appropriate positions in the circuits, or by slightly modifying the existing values of certain circuit elements. Also, care should be used in the physical arrangement and wiring of parts.

109. Keying Systems

a. Keying a c-w transmitter causes an r-f signal to be radiated *only* when the key contacts are closed. When the key is open the transmitter will not radiate energy. Keying is accomplished in either the oscillator or amplifier stages of the transmitter. A number of different keying systems are used in Army transmitters.

b. The two circuits ① and ② of figure 175 show the most common methods of keying a transmitter when the keying is accomplished in

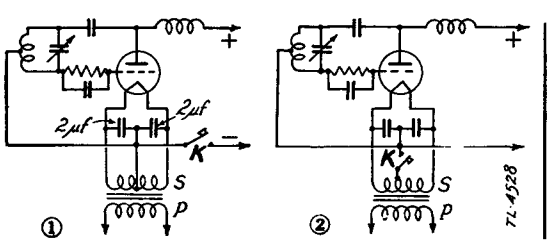

Figure 175. Two methods of oscillator keying.

the oscillator stage of the transmitter. If the filament of the tube is heated by a d-c current, the negative side of the filament corresponds to the center-tapped transformer connection of the a-c filament. In

figure 175① the grid circuit is closed at all times, and the key opens and closes the negative side of the plate circuit. This system is called *plate keying.* When the key is open, no plate current can flow, and the tube does not oscillate. In figure 175② the grid and the plate circuits are both open when the key is open, and both are closed when the key is closed. Although the circuits of figure 175 may be used to key amplifiers, other keying methods are generally employed, because of the larger values of plate current and higher voltages encountered.

c. The operation of the keying circuit of figure 176① is similar to that of the cathode-resistor grid-biasing method. With the key open, the plate current flows through resistor R_1, in a direction which makes the end connected to grid resistor R_G negative with respect to the cathode end. If R_1 is of a high enough value, the bias developed is sufficient to cause practical cut-off of the plate current. Complete cut-off is not possible with this system, since the bias developed across R_1 depends upon the flow of current through it. However, the blocking is sufficient for practical keying. Depressing the key short-circuits resistor R_1, thus removing the bias and allowing the normal flow of plate current. Grid resistor R_G is the usual grid-leak resistor for normal operating bias.

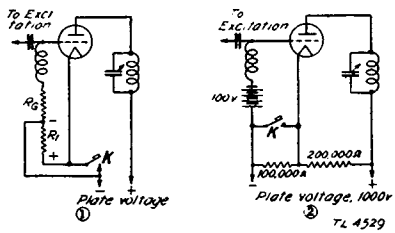

Figure 176. Two methods of blocked-grid keying.

d. The block-grid keying of figure 176② affords complete cut-off of plate current, and is one of the best methods for keying amplifier stages. in Army transmitters. With the key open, two-thirds of 1,000 volts, or 667 volts, are across the 200,000-ohm resistor; that is, 667 volts are applied to the plate; and one-third of 1,000 volts, or 333 volts, are across the 100,000-ohm resistor, so that 333 plus 100, or 433 volts of negative bias are applied to the grid. No plate current can flow under these conditions. With the key down and short-circuiting the 100,000-ohm resistor, the full 1,000-volt plate supply appears across plate to cathode, while the grid bias is reduced to 100 volts. Under these conditions the amplifier operates normally.

e. In transmitters having an oscillator followed by one stage or more of power amplification, the keying may be accomplished by any arrangement which best fulfills the needs. In some portable field sets, the

transmitting key opens and closes the plate circuits of all the tubes used in the transmitter. This removes the entire load from the plate power supply while the key is open. The power is usually obtained from storage batteries, or from a hand-driven generator. In small permanently installed transmitters, where the cost of power is not of primary consideration, and where greater frequency stability is expected, the oscillator should remain in operation continuously while the transmitter is in use. This keeps the oscillator tube at normal operating temperature and offers less chance for frequency variation each time the key is closed. If the oscillator is to operate continuously, and the keying is to be accomplished in the r-f amplifier, the oscillator circuit must be carefully shielded to prevent radiation and interference to the operator while he is receiving.

f. In transmitters using a crystal-controlled oscillator, the keying is almost always accomplished in the power-amplifier circuits. In the larger transmitters (75 watts and higher), the ordinary hand key cannot accommodate the plate current without excessive arcing. Moreover, because of the high plate potentials used, it is dangerous to operate a hand key in the plate circuit. A slight slip of the hand below the key knob might result in a bad shock; or, in case of defective r-f plate chokes, a severe r-f burn might be incurred. In these larger transmitters, some local low-voltage supply, such as a battery, or the filament supply to the transmitter, is used with the hand key, to open and close a circuit through the coils of a relay. The relay contacts, in turn, open and close the keying circuits of the amplifier tubes. The schematic diagram of a typical relay-operated keying system is shown in figure 177. The hand key closes the circuit from the low-voltage supply

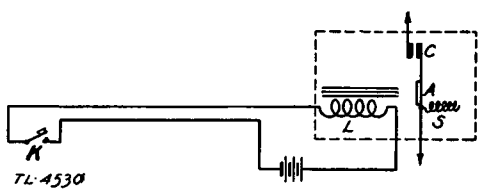

Figure 177. Circuit for relay-operated keying system.

through coil L of the keying relay. The electromagnetism of this coil draws the metal arm A toward it against the tension of the spring S. This arm, when drawn toward the coil core, closes the contact points C, which are in the keying circuit of the power amplifier. When the hand key is opened, the coil deenergizes and allows the contact points to be drawn apart by the tension of the spring.

g. Theoretically, keying a transmitter should instantaneously start and stop radiation of the carrier completely. However, the sudden application and removal of power creates large surges of current which

will cause interference in nearby receivers. Even though such receivers are tuned to frequencies far removed from that of the transmitter, interference will be present in the form of clicks or thumps. To prevent such interference, key-click filters are used in the keying systems of radio transmitters. Two types of key-click filters are shown in figure 178. The capacitors and r-f chokes in both circuits of figure 178 prevent

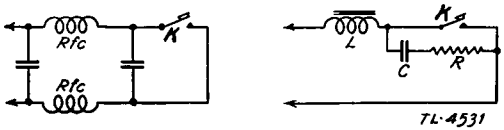

Figure 178. Two types of key-click filters.

surges of current. The inductor, or choke coil, L causes a slight lag in the current when the key is closed, and thus the current builds up gradually instead of instantly. Capacitor C releases the energy slowly when the key is opened. Resistor R controls the rate of charge and discharge of capacitor C, and also prevents sparking at the key contacts by the sudden discharge of C when the key is closed.

h. Another difficulty which may be encountered in keying a transmitter is the presence of a back-wave. This is the result of some energy leaking through to the antenna, even though the key is open. The effect is as though the dots and dashes were simply louder portions of a continuous carrier. It may become difficult to distinguish the dots and dashes under such conditions. Back-wave radiation is usually the result of incomplete neutralization.

110. Circuit of a c-w Transmitter

a. The circuit of a complete master-oscillator power-amplifier (m-o-p-a) transmitter is shown in figure 179. This circuit consists of only two tubes, one tube functioning in a Hartley-oscillator circuit and the other operating as a class C amplifier.

b. The oscillator is a conventional shunt-fed Hartley circuit using a VT-62 (commercial type 801) tube with 350 volts on the plate. This voltage provides about 7.5 watts output. Because of this power reserve,

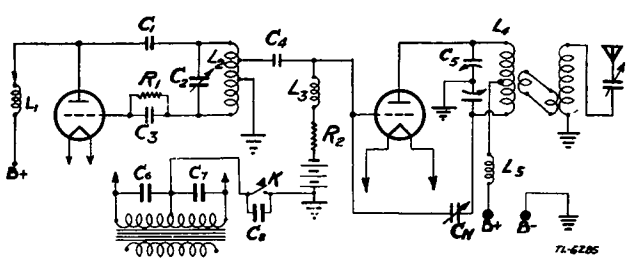

Figure 179. Complete master-oscillator power-amplifier circuit.

a portion of the oscillator output can be fed directly into the grid of the class C amplifier with fairly good results.

c. R-f choke L_1 allows the passage of the direct current to the plate of the oscillator tube, but prevents the r-f currents from flowing into the power supply. The r-f currents flow through capacitor C_1 to the oscillatory circuit L_2C_2. Resistor R_1 is the grid-bias resistor, and is shunted by filter capacitor C_3. Grid excitation for the amplifier is taken from a tap on the plate side of the oscillatory circuit, and the voltage impressed on the grid of the amplifier is that voltage existing between the tap and ground connection. If more drive is required on the grid, the position of the tap is moved toward the plate. Capacitor C_4 blocks the d-c voltage but allows the r-f voltage to appear on the grid of the amplifier. R-f choke coil L_3 prevents the flow of r-f currents but permits the flow of the rectified grid current. A battery is provided for protective bias. The total grid bias when the stage is operating (this is a class C amplifier) will be the battery voltage plus that voltage developed by the grid-bias resistor. Inductor L_4 and capacitor C_5 form the plate tank circuit for the amplifier.

d. The inductor is center-tapped to provide neutralizing voltage which is fed to the grid through neutralizing capacitor C_N. A split-stator capacitor is used for tuning, its rotor being grounded. This has the advantage of providing the same ratio of neutralization voltage for any frequency. Thus, once the stage is neutralized, C_N will not normally have to be adjusted again unless it is thrown out of adjustment by vibration or by a sudden jar. Choke coil L_5 serves to prevent r-f currents from flowing into the power supply.

e. The cathodes of the tubes in this circuit are directly heated filaments. To remove the possibility of hum, the filament transformer is center-tapped. The grid is then always at zero potential as far as a-c voltage on the filament is concerned. Capacitors C_6, C_7, and C_8 provide the ground return path for r-f currents, thus keeping them out of the filament transformer windings. These capacitors also prevent the possibility of damage to the transformer insulation by r-f currents.

f. The key is placed in the filament-return lead, and opens and closes the d-c ground-return path to the tubes. Both the oscillator and amplifier are keyed at the same time to prevent the transmitter from oscillating when the key is open. The advantage of this type of keying is that it provides a method of break-in operation. For example, an operator at station A is transmitting a message to a distant station B. Assume that during the course of the transmission the operator at B misses part of the message. It will be possible for him to break-in with a rapid succession of dots, to indicate that this is the case. Since the transmitter at A is silent between the dots and dashes of his transmission, he can hear station B's break-in signals and repeat all or part of the message.

g. Link coupling is used to transfer power from the transmitter to the antenna. Link coupling consists of a pair of wires with a loop of two or three turns at either end. Each loop must be placed at a point of low r-f voltage (the point where $B+$ enters the tank circuit) to prevent capacitive coupling between the link coil and the plate tank circuit. It is a very efficient form of coupling and is used in many sets. It can be used between stages, or from a final stage to the antenna. Its chief advantage is that it can be of almost any reasonable length necessary to couple widely separated stages where another type of coupling would be impractical or inconvenient.

111. Tuning of Transmitter

a. It is important that all radio transmitters be properly tuned to insure efficient operation on the assigned frequency. Plate-current meters are generally used to indicate proper adjustment of the r-f stages. All stages, with the exception of the oscillator, are always adjusted or tuned for minimum plate current. If a stage is not tuned to resonance, the plate current will be high, and high plate dissipation, power loss, and low output will result. When a stage is loaded by another stage or an antenna, the plate current of the stage in question must be rechecked for circuit resonance (minimum plate current) after loading.

b. If grid-current meters are available in the transmitter, the grid-input stage must be tuned so that maximum grid current is drawn. If no grid-current meter is available, grid-circuit resonance can be shown by a sharp increase in plate current of the previous stage.

c. If a gassy tube is present in the set, plate current to that stage cannot be brought to the proper minimum, and grid current will remain too low. The tube will act as though there were a short circuit between the grid and cathode, and a great deal of the energy furnished to the stage will be grounded and lost. This condition can be recognized by any of the indications just mentioned, and by a violet-colored glow between tube elements. The only remedy for this condition is a new tube.

112. Capabilities of c-w Transmitter

In view of the comparative slowness and inconvenience of keying the dots and dashes of Morse code, it might seem that radiotelegraphy would be superseded by radiotelephony, which uses modulated waves. C-w transmission, however has four distinct advantages over radiotelephony.

a. Radiotelegraph transmitters have a greater transmission range than radiotelephone transmitters of the same output power because speech from a distant point may be audible but not intelligible.

b. C-w signals may be picked up by code receivers which are capable of rejecting most of the interference characteristic of all r-f waves.

c. The radiotelegraph transmitter (of the same power as the radiotelephone transmitter) is smaller, and much simpler to operate.

d. Within a given frequency band, many more radiotelegraph transmitters than radiotelephone transmitters may be operated without interference.

SECTION XII

MODULATED TRANSMITTERS

113. Radiotelephone Transmission

a. It was shown in the previous section that the continuous wave of radio frequency can be interrupted by means of a key, so that short and long bursts of r-f oscillations (dots and dashes) will convey intelligence in the form of code. There are two other methods of conveying intelligence by means of the continuous wave, due to two inherent characteristics of this r-f carrier: the amplitude and the frequency of the wave. Varying either the amplitude or the frequency of a continuous wave will permit the transmission of voice and music, as well as code. This process is know as *modulation. Amplitude modulation* is widely used in almost all radiotelephone transmitters. *Frequency modulation* is a comparative newcomer to the radio field, and will be discussed further in section XIII.

b. Amplitude modulation may be defined as the variation of the strength of the r-f output of a transmitter at an audio rate. In other words, the r-f energy has to increase and decrease in power according to the audio (sound) frequencies. If the audio frequency is high, the radio frequency must vary in amplitude more rapidly than if the audio frequency were low. If the audio note is loud in volume, the radio-frequency energy must increase and decrease by a larger percentage than if the audio note were soft. Thus, the r-f variations must correspond in every respect with the a-f variations.

c. The block diagram of a typical radiotelephone transmitter is shown in figure 180. It will be noted that the final stage of the transmitter is an r-f power amplifier, which in some ways is similar to the final stage of the c-w transmitter. The c-w transmitter is keyed by controlling the voltage on the plate or the grid of the final amplifier with a key. If it is desired to vary the output of a transmitter instead of merely turning it off and on, it can be done by varying the voltage on one of the electrodes of the final r-f power amplifier tube. For instance, if the plate voltage on the final amplifier were to be varied at an audio frequency, the output of the amplifier and hence, the transmitter, would be varied at the same rate. This is the method used in the most popular type of amplitude modulation.

d. In order to vary the plate voltage of the final r-f amplifier at an audio frequency, it is necessary, first of all, to produce an audio voltage. This is done with a microphone. The output of a microphone is, however, very small (usually less than 1 volt), while the plate voltage of

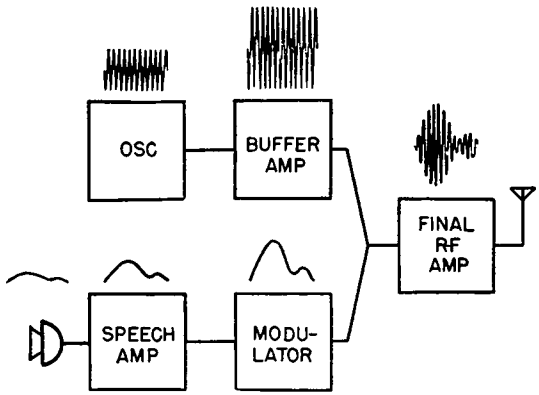

Figure 180. Block diagram of amplitude-modulated transmitter showing formation of modulated wave.

the r-f amplifier is quite high. The addition of a small audio voltage to a high plate voltage would result in only a very small variation of the plate voltage. It is necessary, therefore, to amplify the output of the microphone before it is applied to the plate of the power amplifier. This amplification is usually accomplished in at least two stages. The output of the microphone is fed into the grid of a class *A* voltage amplifier, merely to step up the voltage. This first voltage amplifier is called the *speech amplifier.* The voltage output of the speech amplifier is used to drive the grid of an audio power amplifier. This second amplifier is called the *modulator.* The modulator can be any type of audio power amplifier capable of providing sufficient undistorted power. Thus, it may be a class *A,* a class *AB,* or a class *B* amplifier. If it is a class *AB* or a class *B* amplifier, it must be a push-pull stage, and the power output of the modulator is then applied to the plate of the r-f power amplifier.

e. The manner in which the a-f signal is amplified and then applied to the r-f carrier is shown graphically by the waveforms in figure 180. The r-f oscillations without modulation are known as the *r-f carrier.* Applying the audio output of the modulator to the plate of the r-f power amplifier causes the plate voltage to rise and fall at the audio rate, thereby increasing and decreasing the r-f output of the amplifier in step with the sound applied to the microphone. Thus the carrier is modulated, and since modulating the carrier in this manner varies the strength, or amplitude, of the signal, this method is called amplitude modulation.

114. Audio Components

a. The parts of a radiotelephone transmitter concerned only with the audio frequencies are the *microphone*, or *generator*, of the audio signal, the *speech amplifier*, which is a normal a-f amplifier; and the *modulator*, which furnishes the power to vary the amplitude of the r-f wave in accordance with the a-f signal.

b. The *carbon microphone* is the most widely used microphone in the Army. The diagram of a typical carbon microphone is shown in figure

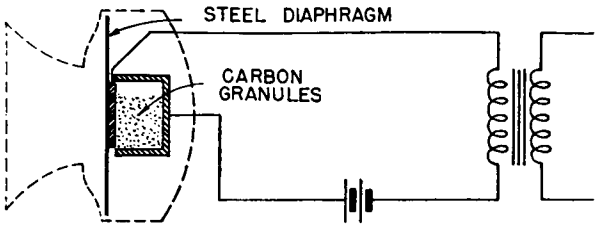

Figure 181. Carbon microphone.

181. It is, in effect, a variable resistance. Connections are made to a small container filled with carbon granules, and attached to this container is a flexible diaphragm. Sound waves produced by the voice strike the diaphragm, causing it to vibrate. The vibration of the diaphragm compresses and releases the carbon granules, thus changing the resistance of the microphone. Since $I = E/R$, as the resistance changes, the current in the microphone circuit changes. Thus, the voice creates a fluctuating direct current in the microphone circuit. The microphone of figure 181 is known as a *single-button* carbon microphone. The word *button* refers to the small container which holds the carbon granules. *Double-button* carbon microphones, which use a second button the other side of the diaphragm, are seldom used in Army equipment.

c. The *dynamic microphone* (fig. 182) is a more modern type of microphone. The moving coil which is fastened to the diaphragm moves in

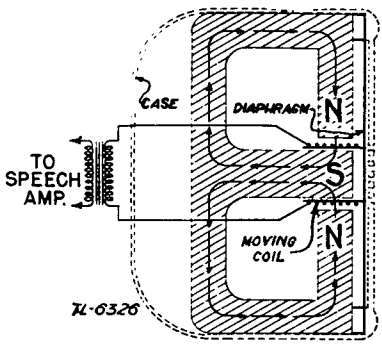

Figure 182. Dynamic microphone.

and out in accordance with the voice impulses, and the wires in the coil cut the magnetic lines of force set up by the permanent magnet. The voltage induced in the moving coil varies exactly as does the speech or sound impressed upon the diaphragm. The dynamic microphone is perhaps the most rugged type used in the field, but it has the disadvantage of low output. This is offset by the advantage that, unlike the carbon microphone, the dynamic microphone requires no battery circuit.

d. The *speech amplifier* is used to raise the audio output of the microphone to a suitable level for use in the modulator stage. The microphone-output currents are very weak, and to be of any use in modulation these currents must be amplified. Referring to figures 181 and 182, it can be seen that the output of either microphone can be transformer-coupled to the grid of an audio amplifier. The amplifier employed is a sensitive class *A* amplifier. The transformers shown in figures 181 and 182 usually have a very high turns ratio in order to step up the voltage. Thus, any small variations of microphone current in the primary of such a transformer will develop a voltage across the secondary, which is applied to the grid of the speech amplifier. The transformer also serves to match the low-impedance microphone to the high impedance of the grid circuit of the amplifier. When a dynamic microphone is used, two and sometimes three speech amplifier stages are required to raise the weak audio voltage to a level suitable for the modulator stage.

e. The *modulator* furnishes the power necessary to vary the amplitude of the r-f wave in accordance with the sound impulses. The modulator is always an a-f power amplifier, and either single-tube or push-pull amplifiers may be used. The push-pull power-amplifier stage is capable of furnishing much more power with greater efficiency than a single-tube amplifier.

115. Percentage of Modulation

a. The degree of modulation is expressed by the percentage of maximum amplitude deviation from the normal value of the r-f carrier. The effect of a modulated wave, as measured by receiver response, is proportional to the degree or percentage of modulation.

b. The percentage of variation of the total voltage of the final r-f amplifier stage will depend upon the ratio of a-f to d-c voltage. For example, if the d-c plate voltage to the r-f amplifier is 100 volts, and the a-f voltage is 50 volts, the two voltages will add (when they are acting in the same direction) to give 150 volts. They will subtract (when they are acting in opposite directions) to give 50 volts. The plate voltage on the r-f amplifier will vary between 50 and 150 volts (fig. 183①). Since the variation (50 volts on either side of the d-c voltage) is one-half of the d-c voltage of 100 volts, the transmitter is said to be modulated 50 percent. This same result may be shown in

terms of the r-f output of the transmitter (fig. 183②). The amplitude of the *carrier* (the r-f wave produced with only the d-c voltage on the plate of the r-f amplifier) is shown in A of figure 183②. Notice that

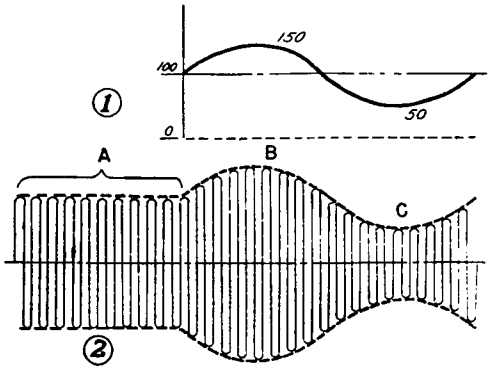

① *Values of instantaneous plate voltage.*
② *Modulated r-f wave.*
Figure 183. Illustrating 50-percent modulation.

this carrier is of constant amplitude. As soon as an a-c voltage is applied in series with a d-c voltage (when the modulator is in operation), the plate voltage, and hence the r-f output, begins to vary. At *B* (fig. 183②) the r-f wave has reached an amplitude 50 percent greater than during period *A*. When the plate voltage decreases, the r-f output decreases. At *C* the r-f wave has reached an amplitude 50 percent less than the unmodulated wave at *A*. Thus, percentage or degree of modulation may be defined as the percentage of variation of the modulated wave compared with the unmodulated wave.

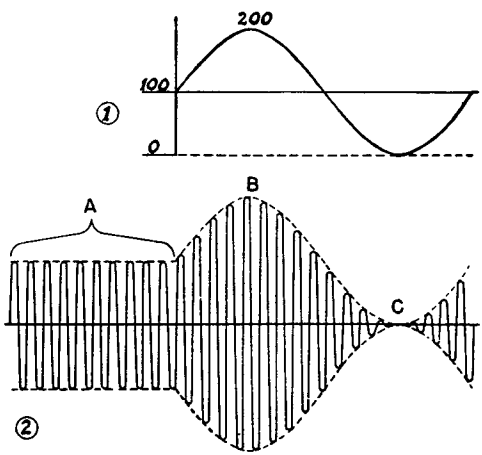

① *Values of instantaneous plate voltage.*
② *The modulated r-f wave.*
Figure 184. Illustrating 100-percent modulation.

c. If the d-c voltage were 100 volts and the audio voltage also were 100 volts, the instantaneous plate voltage would vary between zero and 200 volts (fig. 184①). Whenever the instantaneous plate voltage varies between zero and twice its unmodulated value, there is 100-percent modulation. The resulting r-f waveform is shown in figure 184②.

d. It is important that the amplitude be varied as much as possible, because the output of a detector in a radio receiver varies with the amplitude variations of the received signal. This is why a comparatively low-power station, well-modulated, will often produce a stronger signal at a given point than a much higher powered, but poorly modulated transmitter located the same distance from the receiver. However, there is a limit to the permissible percentage of modulation, and this limit is 100 percent.

e. To understand more clearly this limitation of 100-percent modulation, assume that a given transmitter is actually modulated 150 percent. With a d-c voltage of 100 volts, this would require an audio voltage of 150 volts. The two would add together to give 250 volts, and the plate voltage then would swing back through zero, down to minus 50 volts,

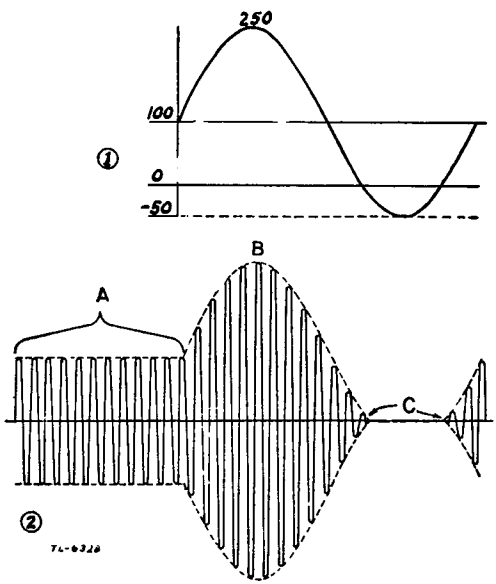

① *Values of instantaneous plate voltage.*
② *Modulated r-f wave.*
Figure 185. Over-modulation.

and then back to zero (fig. 185①). During the swing from zero to 250 volts and back to zero, plate current would flow. But during the swing from zero to —50 volts and back again to zero, little or no plate current would flow. During this period the transmitter would effectively be

shut off. This condition produces an over-modulated r-f wave (fig. 185②). The unmodulated carrier wave is shown at *A* in figure 185②. With the modulator in operation, the r-f wave would increase to the value shown at *B;* it would then decrease to zero. But over the region *C,* the plate voltage would be negative and there would be no output from the tube. This over-modulation thus causes distortion in the received signal. It results whenever the audio voltage exceeds the d-c voltage applied to the plate of the r-f amplifier.

116. Side Bands

a. Figures 183 and 184 are graphic pictures of an r-f wave modulated at different percentages. Such a wave is actually a combination of several frequencies. It is not possible to tell, merely by looking at a wave, what frequencies are combined to give it the shape it has. However, by involved mathematical analysis these frequencies can be determined. As a practical example, if the r-f carrier is 100 kilocycles and the audio frequency is 1,000 cycles, or 1 kilocycle, the wave will contain the following frequencies:

Fundamental frequencies	Second harmonic	Sum frequency	Difference frequency
100 kc 1 kc	200 kc 2 kc	101 kc	99 kc

Harmonics other than the second are produced, but they are very weak and easily dispensed with as described below. All of these frequencies are present in the plate circuit of the final r-f amplifier. But the plate circuit is broadly tuned to 100 kilocycles, so that only frequencies of 100 kilocycles, 101 kilocycles, and 99 kilocycles will get into the antenna through the antenna coupling circuit. The rest of the frequencies developed will be bypassed. Thus, instead of transmitting only one frequency, the antenna is transmitting three fre-

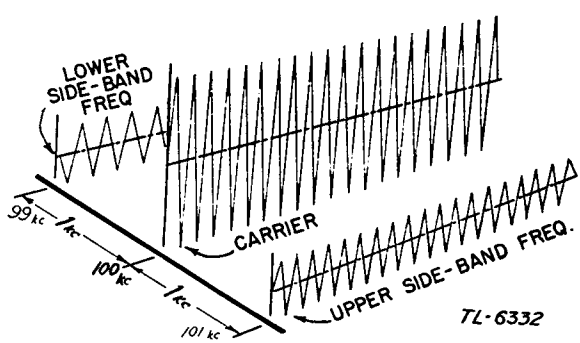

Figure 186. Carrier wave and its side-band frequencies.

quencies very close together. This condition may be thought of as resembling the frequency waveforms shown in figure 186.

b. These extra frequencies are known as *side-band frequencies,* or merely *side bands.* As shown in figure 186, these side bands are separated from the carrier (100 kilocycles) by the amount of the audio frequency (1 kilocycle). Thus, if the audio frequency had been 2 kilocycles, the side-band frequencies would be 98 kilocycles and 102 kilocycles. The higher the audio-modulation frequency, the farther both side bands will be from the main carrier wave.

c. In actual speech, many audio frequencies are used to modulate the carrier wave. There will be a pair of frequencies (one upper and one lower) for each audio frequency, and there will be an entire band, or group, of frequencies resulting from speech modulation. The graph of such a carrier is shown in figure 187, and the complex nature of speech impulses can be seen from this wave. The graph of figure 187

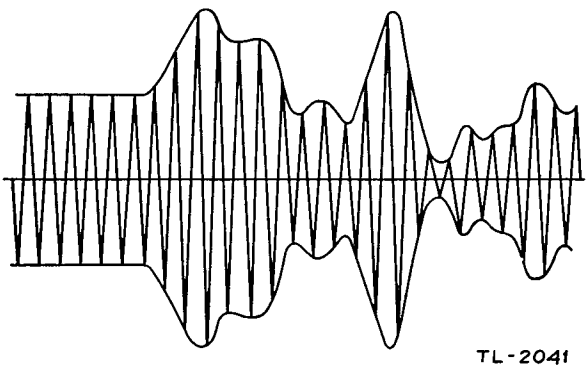

Figure 187. Radio wave modulated with voice.

is the waveform resulting from the addition of the side bands to the carrier wave.

d. If the modulator of a radiotelephone transmitter were turned off, the carrier would continue to be transmitted by the r-f power amplifier. However, as soon as the modulator is turned on and the r-f carrier is varied by modulation, the side-band frequencies come into existence. From this it can be seen that the modulated wave contained more power than the carrier wave alone. The additional power is supplied by the modulator stage, and appears in the form of the side bands.

117. Power Relations in the Modulated Transmitter

a. The amount of power required to modulate a transmitter depends on the percent and type of modulation. To modulate a carrier 100 percent with a single sine wave of audio frequency requires an audio

power equal to one-half of the r-f carrier power. This is because with 100-percent modulation the amplitude of each side band is one-half the amplitude of the carrier. Power is proportional to current squared; thus, each side band carrying one-half the current of the carrier requires one-fourth the power. However, the power required with modulation is one and one-half times the normal unmodulated power. Using voice modulation the greater portion of the a-f components will not modulate the carrier 100 percent, so that the power increase for voice modulation is considerably less than for single tone modulation. Since the power is increased during modulation, the reading of an antenna ammeter rises when the transmitter is modulated.

b. A modulated r-f amplifier must handle peak currents which are twice the normal (unmodulated) magnitude. This means that during modulation an amplifier must be capable of handling up to four times the power it dissipates during steady intervals of unmodulated carrier output. For this reason, in a transmitter which is designed for both c-w and radiotelephone service, the modulated amplifier stages are always reduced in carrier power output for phone operation.

118. Methods of Modulation

a. There are various methods of modulation. The most common type is the method whereby the a-f modulating voltage can be applied to the *plate* of one of the transmitter r-f amplifiers to cause the carrier output to vary in accordance with the audio frequency. This popular method is known as *plate modulation.* Application of the a-f voltage to the control grid of the r-f amplifier is referred to as *grid modulation,* or *grid-bias modulation.* A pentode power amplifier can be modulated by applying the audio frequency to the suppressor grid; this is known as *suppressor modulation. Screen-grid modulation* can be accomplished by use of the tetrode. *Cathode modulation,* in which the audio voltage is applied in the cathode circuit, is a combination of plate and grid modulation.

b. Modulating the final r-f stage of a radiotelephone transmitter is known as *high-level modulation,* since the modulation takes place at the highest power level of the system. If the modulation process takes place in an intermediate stage with one or several higher power amplifiers following, it is known as *low-level modulation.* In low-level modulation, r-f amplifiers which follow the modulated stage are operated as linear amplifiers, that is, in such a manner that their a-c output potentials faithfully reproduce the applied grid potentials without distortion. In high-level modulation, the final r-f power amplifier is always operated as a class *C* amplifier.

c. The *method* of modulation refers to the electrode of the r-f power-amplifier tube to which the a-f modulating voltage is applied.

119. Plate Modulation

a. The application of a-f power to the plate circuit of an r-f power amplifier is known as *plate modulation.* An amplifier using plate modulation is much more efficient than one using grid or some other form of modulation. Another advantage of plate modulation is the ease with which proper adjustments can be made in the transmitter. There is less plate loss in the r-f power amplifier for a given value of carrier power than in other forms of modulation, since the plate efficiency is higher. Additional power radiated in the form of *side bands* is supplied by the modulator. This type of modulation is used to a greater extent than any other.

b. The simplest method of modulating the plate of the r-f amplifier is by means of transformer coupling. In the circuit diagram of figure 188, the a-f output of the modulator stage is coupled through trans-

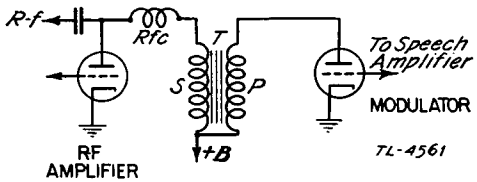

Figure 188. Transformer-coupled modulator circuit.

former *T* to the plate circuit of the power amplifier. The voltage appearing across the secondary *(S)* of the transformer is an audio voltage; as such it is an alternating voltage driving first in one direction, then in the other. This voltage is in series with the d-c supply voltage, which drives in only one direction. Thus, at one instant, the a-c voltage and the d-c voltage will be acting in the same direction and the total voltage will increase. But, at the next instant, the a-c voltage will have reversed, and the two voltages will then oppose each other. Thus, the total voltage will decrease. There will be an alternate increase and decrease of the total voltage at an audio frequency. Since this total voltage is the plate voltage, and is placed between the plate and the cathode of the r-f power amplifier, the amount of variation in amplitude of the r-f wave depends upon the relative amounts of the audio and d-c voltages.

c. The plate of the r-f amplifier tube can be modulated by another method using a *reactor,* or *choke coil.* (See fig. 189.) Both the plate of the modulator tube and the r-f power amplifier obtain their d-c plate voltage through the iron-core choke *L,* called a *modulation reactor.* As the plate current of the modulator increases and decreases (at audio frequencies), a voltage will be developed across *L* proportional to the current flowing through it. This voltage is developed across the choke in the following manner. When the plate current

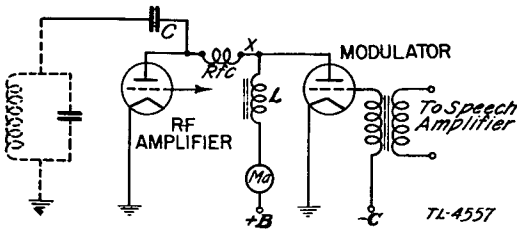

Figure 189. Choke-coupled (constant-current) modulation circuit.

from the modulator increases, the expanding magnetic field of the choke induces a voltage which will tend to oppose the change of current. This voltage will buck the voltage applied to the plate of the r-f amplifier, thereby reducing its plate current. When the modulator plate current decreases, this same magnetic field will collapse and again induce a voltage. This induced voltage will aid the voltage on the plate of the modulated stage and increase its plate current. Thus, there will be an alternating voltage and current in the plate circuit of the modulated stage, varying its output in accordance with the audio signal. It should be noted that as the current *to the modulator* is increasing, the current to the modulated stage is decreasing, and *vice versa*. Because of this action, the current indicated on the meter M_A will remain practically constant. This system is called the *constant-current system.*

d. Because the choke-coupled circuit of figure 189 requires that the modulator tube operate as a class *A* amplifier, it is impossible to develop enough voltage across the modulation reactor to vary the voltage on the plate of the modulated r-f amplifier between double its normal d-c value and zero. It is impossible, therefore, to attain 100 percent modulation with the circuit shown in figure 189. However,

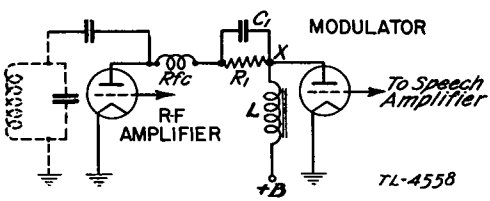

Figure 190. Choke-coupled circuit modified for 100 percent modulation.

with a resistor connected in the circuit as shown in figure 190, 100 percent modulation can be obtained. The purpose of the resistor R_1 is to drop the plate voltage to the r-f amplifier. The modulator then operates at a higher voltage than the stage being modulated. With this lower voltage on the plate of the r-f amplifier, it is not necessary to develop as much voltage across the choke to get 100 percent modulation.

The capacitor is connected across the resistor to bypass the a-f voltage around the resistor, so that the a-f signal will not be lowered by the resistor. The purpose of the r-f choke, *RFC,* is to keep the r-f voltage present at the plate of the r-f amplifier stage out of the modulator.

e. Another method of obtaining 100 percent modulation with the constant-current system is to use an autotransformer, as shown in

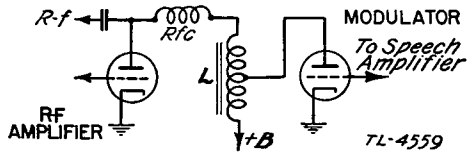

Figure 191. Plate modulator circuit with autotransformer.

figure 191. In this circuit, a small voltage developed in the modulator section of the autotransformer coil will result in a larger voltage change applied to the plate of the modulated stage. This modulation system also has the advantage of utilizing the full supply voltage on the plate of the modulated stage.

f. A comparison of the circuits in figures 188 and 191 shows that the only difference between the two is that in figure 188 two windings are used instead of one. The employment of a two-winding a-f transformer makes possible the use of a class *B* push-pull amplifier, which gives much greater power output with less distortion than does a class *A* amplifier. The use of such a circuit will result in the saving of

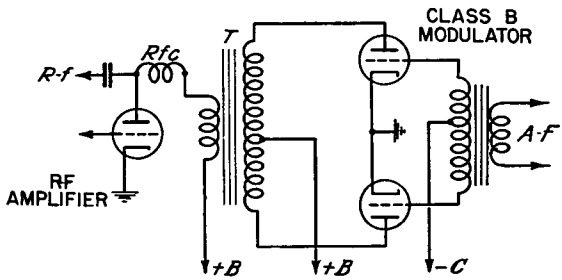

Figure 192. Class B push-pull modulator circuit.

power, since no plate current flows until the voice impulses reach the grids of the tubes. A typical class *B* push-pull modulator circuit is shown in figure 192.

g. The theory of plate modulation is important for a full understanding of the action of the modulating voltage in the r-f power amplifier stage. An audio voltage is produced which corresponds in every respect, except in strength, with the variations of the sound input to the microphone, and this voltage is placed on the plate of the r-f power amplifier. But the reason for varying the plate voltage of the r-f

amplifier is to vary the power output of the transmitter. An undistorted audio voltage is useful only if the r-f power output can be made to vary in step with the plate voltage. The only way to achieve this is to operate the stage as a class *C* amplifier and to place a heavy signal on the grid of the tube. The reason for this is apparent. The output of the transmitter is fed from the tuned plate circuit of the r-f power amplifier to the antenna. The output of the tuned circuit depends upon the amount of oscillating current (radio frequency) flowing in it. Since the tuned circuit is excited by pulses of plate current the oscillating current, and hence the output at each moment, will depend on the size of each plate-current pulse. In order for the output to vary at an audio rate, the plate-current pulses must vary in size at an audio rate. Since the plate voltage of the r-f power amplifier is varying at an audio frequency, it must be insured that as the plate voltage changes the plate current will change proportionately. In a vacuum tube, plate current is controlled by grid voltage as well as plate voltage. If the grid is excited or driven very hard, so that every time it goes positive it will allow maximum plate current to flow, the plate current will be limited only by the plate voltage. If the plate voltage is high, a great deal of current will flow. The grid is sufficiently positive not to interfere with this action. If the plate voltage is low, the plate current will also be low. Thus, the grid voltage will control the frequency of the plate-current pulses, because plate current will flow only on the positive peak of each grid cycle. The size of each pulse, or the amount of current that will flow each time the grid passes cut-off, will depend on the plate voltage at that moment. While plate voltage is increasing, each pulse will be larger than the one before it. When plate voltage is decreasing, each pulse will be smaller than the one before it. These plate-current pulses are applied to the tuned circuit, and cause an oscillating current to flow in it. If the pulses of plate current are large, the current in the tank circuit will be large. If the plate current pulses are small, they will cause only a small tank current to flow. Thus, the r-f output will vary with the plate-current pulses, and hence with the audio variation of plate voltage.

120. Grid Modulation

a. In transmitters using grid modulation, the a-f voltages vary the grid-bias supply to the r-f power amplifier. This variation in grid bias in turn varies the power output of the r-f amplifier, causing a modulated wave to be radiated. This method is also known as *grid-bias modulation.*

b. A circuit using grid modulation is shown in figure 193. A modulation transformer is placed in series with the grid-return lead of the r-f power amplifier. The a-f voltage (from a modulating amplifier) adds to or subtracts from the fixed grid-bias voltage, and so controls

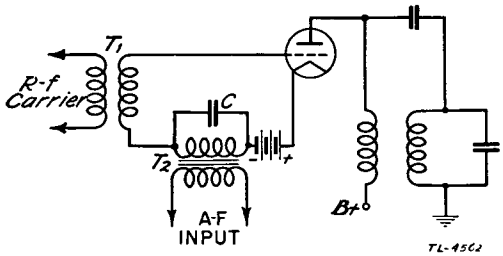

Figure 193. Circuit for grid modulation.

the output power from the r-f amplifier. The grid bias is usually a fixed value, obtained from a battery source or separate power supply. Capacitor *C* is intended to bypass the r-f currents around the modulation transformer secondary. (See fig. 193.)

c. The modulator tube must be operated as a class *A* a-f amplifier. Since varying the grid bias of the r-f stage does not require a great amount of power, the comparatively low output of a class *A* amplifier is sufficient for the purpose of grid modulating. However, the r-f carrier output power of the transmitter that is grid modulated is about one-quarter that of the plate-modulated transmitter. Because of this low efficiency, and the difficulty of achieving any large degree of modulation with it, grid modulation is seldom used in Army transmitting sets.

121. Screen-grid Modulation

In the study of the tetrode (par. 43), it was seen that a small voltage variation on the screen results in a large increase in plate current. It is evident, therefore, that modulation can be effected by placing the modulation transformer in series with the screen-grid lead. However, this method limits the percentage of modulation to a low value, because the relation of screen-voltage variation to plate-current variation

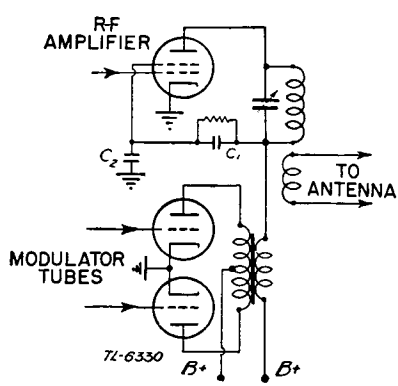

Figure 194. Circuit for screen-grid modulation.

is linear over only a small range. If *both* the plate and screen voltages are modulated at the same time, it is possible to approach 90 percent modulation without undue distortion. A circuit of this nature is shown in figure 194. Note that the screen-dropping resistor is connected to the plate side of the secondary winding of the modulation transformer, so that both screen and plate keep the same ratio of voltages to each other under all variations of plate voltage. Capacitor C_1 bypasses the audio voltage around the screen-dropping resistor while C_2 is the usual screen-bypass capacitor.

122. Suppressor-grid Modulation

Modulation can be obtained by applying a-f voltage to the suppressor grid of a pentode tube which is operated class *C*. A change in bias voltage on the suppressor grid will change the r-f output of a pentode

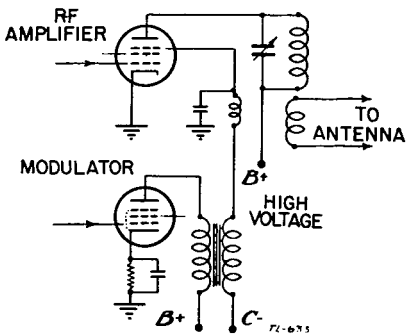

Figure 195. Circuit for suppressor grid modulation.

tube, and thus, the application of a-f voltage provides a simple method of obtaining modulation. It is difficult to obtain 100 percent modulation, although about 90 percent can be obtained with good linearity. A typical circuit for suppressor-grid modulation is shown in figure 195.

123. Tone Modulation

a. When c-w radiotelegraph signals are being received, the pitch of the sound in the headset depends upon the difference between the incoming-signal frequency and the frequency of the heterodyne oscillator, in other words, the beat frequency. If the frequency of the c-w transmitter varies, the pitch of the received note will vary. If the drift in transmitter frequency is very great, the received signal may become inaudible. Under these conditions, the reception of c-w signals becomes very difficult. An obvious remedy is to stabilize the c-w transmitter frequency, but this is not always practicable or possible. In such an event, telegraph communication may be maintained by using a tone-modulated wave. This is known as *tone transmission* and is widely used in the

Army. In tone transmission the r-f carrier is modulated at a fixed audio frequency of about 1,000 cycles per second. The output of the transmitter is keyed in the same manner as for c-w transmission. Since a buzzer or an audio oscillator is generally used as the tone source, the amplitude of the r-f output wave is practically constant and the modulation can be 100 percent. Tone modulation has a slightly greater distance range than voice modulation for the same transmitter. However, the range of tone modulation is always less than that of c-w, on the same transmitter.

b. When receiving tone transmission, the receiver tuning is broader than in c-w reception. The detector should be in a nonoscillating state.

124. High Frequency Transmitters

a. The very-high radio frequencies are considered to be those frequencies above 30 megacycles. All of the principles of modulation and transmission already discussed apply to transmitters designed to operate on these high frequencies. However, there is certain additional information that must be kept in mind when working in this high-frequency range. A straight length of ordinary wire has the properties of both inductance and capacitance. These two properties are not particularly troublesome at the lower radio frequencies, since the lumped inductances and capacitances used at these frequencies are large in comparison to those introduced by the circuit wiring. When working with high frequencies, however, the inductance and capacitance of even short lengths of wiring may represent a large part of the total inductance and capacitance of the individual circuits. The wiring must, therefore, be made as short as possible. This important fact should be kept in mind when replacing parts. Special care must also be taken to make good connections. A badly soldered connection has the effect of introducing a high resistance which may cause the circuit to stop operating. Very high-frequency communication is discussed in section XV.

b. Another important consideration is skin effect, which is the tendency of electrons to travel along the surface of a conductor. This also has the effect of introducing resistance into a circuit. To minimize this effect, which increases as the frequency increases, large size wire and hollow copper tubing are used as conductors.

c. The operation of transmitter circuits at ultra-high frequencies (above 300 megacycles) becomes even more erratic and much more critical.

125. Adjustment of Modulated Amplifiers

a. The proper adjustment of a modulated r-f stage determines its effectiveness for communication by voice transmission over a given

range. It is important to obtain the highest degree of modulation without over-modulating. A general rule which can be used in most cases is to observe plate current in the r-f stage which is being modulated. The audio power to the modulated stage can be increased to the point where the plate current begins to flicker, or wobble. When the modulated r-f stage is properly adjusted, there will be very little movement of the plate-current meter. This movement should never be over about 5 percent.

b. Another check on the proper operation of the modulated stage is a close observation of the antenna-current meter. The power which is added to the carrier by the modulator appears as power in the side bands and not in the carrier itself. For this reason, when a radiotelephone transmitter is first turned on and is unmodulated, the antenna current will read a certain amount, representing carrier power only. If the transmitter is then modulated by a pure sine wave (from an audio oscillator, for example), the antenna current should rise approximately 22 percent for 100-percent modulation. When no audio oscillator is available, the adjustments can be made with voice by humming a steady note into the microphone.

126. Circuit of a Radiotelephone Transmitter

a. The simplified circuit of a typical Army transmitter is shown in figure 196. This is a medium-power transmitter designed for use in aircraft, motor vehicles, and ground equipment. It is capable of transmitting c-w, tone-modulated, or voice-modulated signals. The change-over from one type of modulation to another is accomplished by a switching arrangement with the control mounted on the front

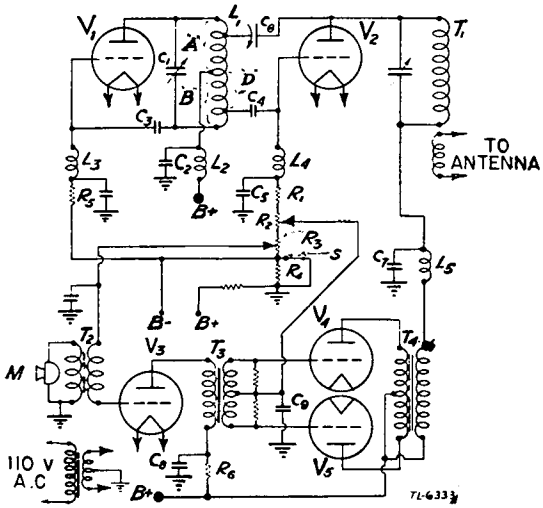

Figure 196. Typical Army phone transmitter.

panel of the set. In the circuit diagram of figure 196, the switch is set for voice modulation. The r-f section of this transmitter uses two tubes in a master-oscillator power-amplifier circuit. A microphone feeding a single speech-amplifier tube, which in turn drives a pair of modulator tubes, comprises the a-f section. Most of the power wiring has been omitted from the diagram of figure 196 for simplicity.

b. Tube V_1 is the oscillator tube using a simple Hartley-oscillator circuit. Inductance L_1 and capacitor C_1 form the tank circuit of the oscillator. The plate section A of the coil is connected across plate and filament through C_2, ground, and the center tap of the filament-transformer secondary. Choke L_2 is a plate-decoupling r-f choke. The grid section B of coil L_1 is connected between grid and filament through C_3, C_2, ground, and the center tap of the filament-transformer secondary shown in the lower left-hand corner of the figure. Resistor R_5 is the oscillator grid-biasing resistor. Choke L_3 is an r-f choke which offers a high impedance to r-f currents in the d-c grid circuit of the oscillator.

c. That part of the oscillator tank voltage developed across section D of the oscillator tank coil is applied between the grid and filament of power-amplifier tube V_2 through capacitors C_4 and C_2, ground, and the filament-transformer secondary center tap. Capacitor C_4 is connected a few turns from the end of coil L_1 in order to reduce the loading effect on the oscillator, thereby contributing to its stability. The type of coupling used between the oscillator and power amplifiers of this transmitter is known as impedance coupling. Normal operating bias for the power-amplifier grid circuit is produced by the d-c grid-current flow through resistors R_1, R_2, and R_3. Choke L_4 is an r-f choke which offers a high impedance to r-f currents in the power-amplifier d-c grid circuit. Capacitor C_5 is an r-f bypass capacitor.

d. The audio impulses created by microphone M are coupled by transformer T_2 to the grid-filament circuit of speech-amplifier tube V_3. Bias for this stage is obtained by tapping off part of the voltage developed across R_3. The audio signal is developed across the primary of audio transformer T_3. Capacitor C_8 is an audio bypass or plate-decoupling capacitor. Resistor R_6 is a voltage-dropping and plate-decoupling resistor. The audio signal of the speech amplifier is transformer-coupled to the grid-filament circuit of the push-pull modulator tubes V_4 and V_5, operating class B. The grid-filament audio circuit is completed through C_9, ground, and the filament-transformer secondary center tap. Grid bias for the modulator tubes is made up of the voltage drop across R_3 and that part of R_2 determined by the setting of the slider on that resistor. The audio plate current of the modulator, in flowing through the primary of T_4, induces an audio voltage in the secondary. This audio voltage is in series with the d-c plate voltage supply to the r-f power amplifier V_2. The audio voltage across the secondary

of T_4 will alternately aid and oppose the d-c plate voltage to the power amplifier V_2, causing this voltage to vary according to the modulating signal. With an r-f voltage applied between grid and filament of V_2, the voltage developed across transformer T_1 will be an r-f voltage varying in amplitude according to the modulating signal. Capacitor C_7 is an r-f bypass capacitor used to provide a low-impedance path back to filament for the r-f current. Coil L_5 is an r-f choke used to prevent r-f current from flowing through the modulator circuits. The coupling between the primary and secondary of T_1 is variable, thus permitting correct matching of impedance between the power-amplifier plate circuit and the antenna. The modulated r-f signal of the secondary is then fed to the antenna.

e. Capacitor C_6 is a neutralizing capacitor for the power amplifier. Since V_2 is a triode, it would oscillate of its own accord because of the feedback through the interelectrode capacitance of the tube. In order to prevent oscillation of the power amplifier, some of the r-f plate current of V_2 is fed through C_6 to the A section of L_1, thereby inducing a voltage in the D section of the coil, which is opposite in phase to the voltage applied to the grid circuit through the interelectrode capacitance of the tube. With the proper adjustment of C_6 these voltages will be equal in strength, though opposite in phase, and will therefore cancel or neutralize each other, preventing the circuit from oscillating.

f. Switch S represents a relay which is operated by a press-to-talk switch mounted on the handle of the microphone. When the operator of the transmitter has completed transmission of a message, he releases the button on the microphone and the switch S is held open by a spring. Resistor R_4 then becomes part of a voltage divider across the B voltage supply, and a high voltage is present across it. Since this resistor is in the grid circuits of all the stages, the voltage drop across it is added to the grid bias of each stage. This voltage is great enough to block all the stages. In this way the transmitter is made inoperative. When a message is to be transmitted, the operator presses the button on the microphone handle, thereby closing switch S and shorting out resistor R_4. This removes the blocking voltage from the grid circuits of all stages and allows the transmitter to go into normal operation.

SECTION XIII

FREQUENCY MODULATION

127. General

a. Noise in the output of a radio receiving set may be defined as any sound or disturbance which was not originally present at the microphone of the radio transmitter, and which interferes with understanding the message coming over the air. Noise may come from many sources, such as automobile ignition systems, lightning and magnetic storms, diathermy machines, atmospherics, or interfering radio stations. These disturbances are like radio signals in character, appear at all radio frequencies, and affect the *amplitude* of the r-f signal by distorting the wave. This is one of the great disadvantages of amplitude-modulated (a-m) waves, since both natural and man-made noise disturbances *(static)* combine with the incoming r-f wave at the receiving antenna. This combination is an r-f wave which varies in amplitude according to the *static impulses* as well as to the original (audio) modulating signal. Both the modulating signal and the static impulses, therefore, will be heard in the loudspeaker of the receiver. To eliminate this fault, some method of modulation is required in which the character of the desired modulations is different from the amplitude variations caused by static impulses. This modulation method is known as *frequency modulation.*

b. The frequency of a carrier wave is equal to the number of cycles per second. This frequency, known as the *carrier frequency,* can be varied or changed a slight amount on either side of its average, or assigned value by means of the a-f modulating signal. These frequency changes can be detected by special radio receivers designed to respond to the frequency-modulated (f-m) r-f waves. The changes in frequency of the transmitter take place within certain specified limits in accordance with the voice or speech to be transmitted. The amplitude of the r-f carrier remains constant, with or without modulation. A radio receiver which is sensitive only to variations in frequency of the incoming carrier, and which discriminates to a large extent against variations in amplitude, is used to receive these f-m signals. Since static crashes, man-made interference, and other disturbances cause a much larger *effective* change in the amplitude of an incoming carrier than in its frequency, this system of communication gives very high quality reception with an almost total absence of noise.

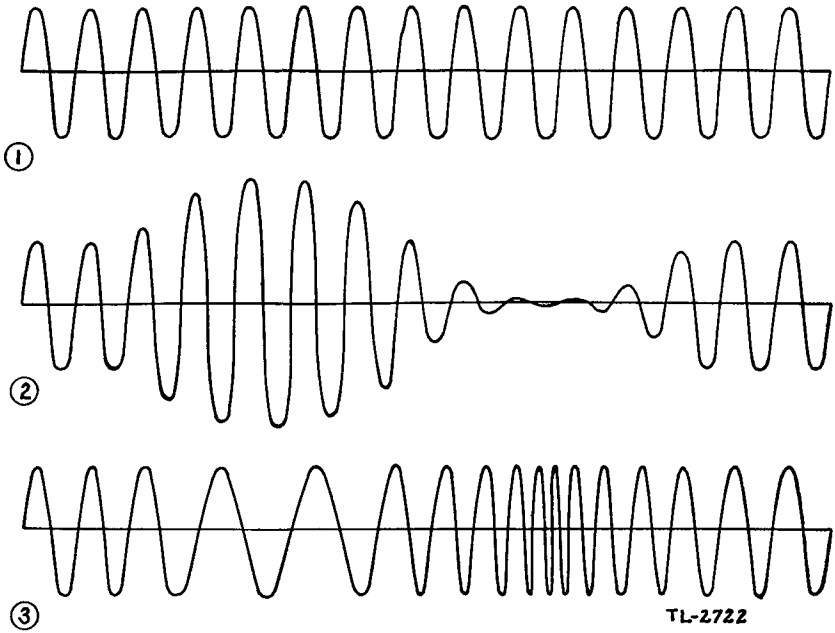

① *Unmodulated r-f carrier wave.*
② *A-m wave.*
③ *F-m wave.*

Figure 197. Comparison of amplitude and frequency modulation.

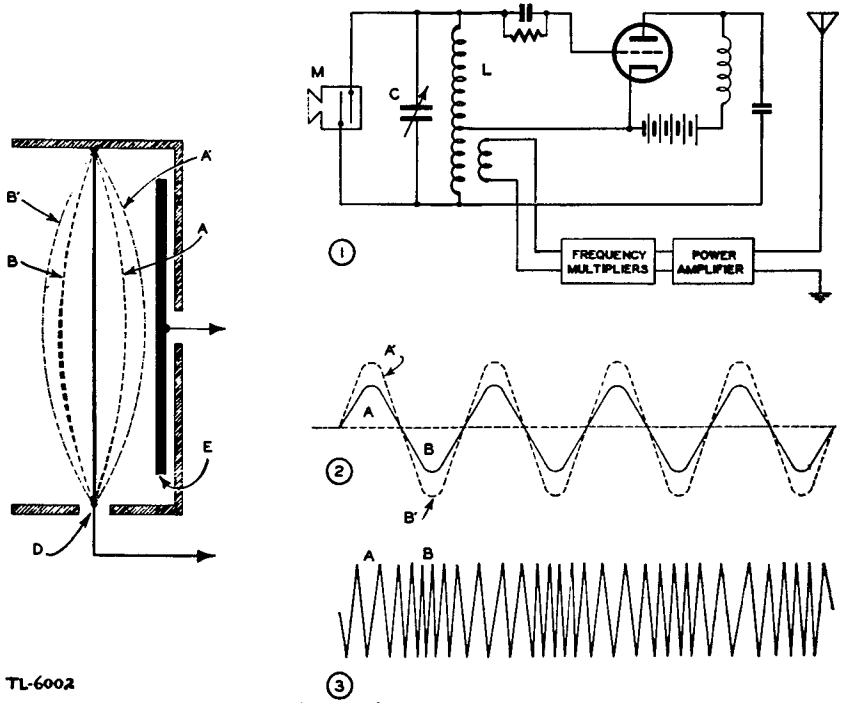

Figure 198. Simple frequency modulation circuit.

c. The essential difference between frequency modulation and amplitude modulation is shown in figure 197. In this figure, ① represents an unmodulated r-f carrier; ② shows the result of amplitude modulating the carrier; and ③ shows the result of frequency modulating the carrier. In ②, during the modulation period, the amplitude rises and falls in accordance with an impressed a-f signal. In ③, during the modulation period, the frequency increases and decreases in accordance with the audio signal, but the amplitude remains constant.

128. Principles of f-m Transmission

a. The simplest form of frequency modulator is that of a condenser microphone shunting a tuned oscillatory circuit (fig. 198①). A discussion of the technical operation of this simple circuit will help to explain the fundamental principles of all f-m transmitters.

b. The circuit shown in figure 198① is that of a shunt-fed Hartley oscillator, which is modified by connecting a condenser microphone *M* across the oscillator tuning capacitor *C*. Electrically, this microphone is nothing more than two plates of a capacitor, one of which is the diaphragm. Sound waves striking the microphone compress and release the diaphragm, thus causing the capacitance to vary, since the value of capacitance of any capacitor depends, in part, upon the distance between the two plates. It will be recalled that the frequency of oscillation of an oscillator may be varied by a change in either the inductance or capacitance of its tuned circuit. In this case, a variation in the capacitance of the microphone causes the resonant point of the oscillator tank circuit to shift alternately to frequencies above and below the original frequency, or *resting frequency*. This shifting of frequencies takes place whenever the diaphragm of the microphone moves.

c. As the positive half-cycle *A* of the sound wave in figure 198② strikes the diaphragm *D* of the microphone (shown in enlarged form to the left of figure 198 for closer inspection), it causes the diaphragm to move inward from its position of rest to position *A*. Since the distance between *D* and *E* has been decreased, the capacitance of the plates has been correspondingly increased, and the oscillator frequency has been decreased from the resting frequency, as shown at *A* in figure 198③. At the end of the first half-cycle, the diaphragm returns to its position of rest and the frequency of the oscillator is again the resting frequency. During the negative half-cycle *B* of the audio wave (fig. 198②), the diaphragm moves to position *B*, increasing the distance between the plates with a resultant decrease in capacitance and an increase in oscillator frequency, as shown at *B* in figure 198③. At the end of the alternation, the diaphragm *D* returns to its position of rest, and the oscillator resumes its resting frequency instantaneously before the action is repeated for the next audio cycle.

d. The frequency or pitch of the audio signal applied to the microphone determines the number of times per second that the diaphragm

vibrates between positions A and B (fig. 198) and, consequently, the number of times per second that the oscillator frequency varies across its resting frequency between its high and low values. A note of 1,000 cycles per second will cause the diaphragm to change from rest to position A, back to position B, and then back to rest 1,000 times per second, with a corresponding variation in oscillator frequency. A 100-cycle audio note of the same volume (amplitude) will cause the same diaphragm vibration at a rate of 100 times per second, with a corresponding rate of change in oscillator frequency. Another important detail to notice at this point is that if the audio signal strength (amplitude) is increased, as shown by the dotted line in figure 198②, the movement of diaphragm D will be over a greater distance, or from A' to B'. This will result in a greater change in capacitance and a greater change in frequency. Thus, the amplitude of the modulating signal determines the change in frequency on both sides of the resting frequency. The amount of change in frequency either side of the resting frequency is known as *deviation.*

e. In Army practice, the maximum deviation allowed for any channel is set at 40 kilocycles. This means that the strongest audio signal that can be used for modulating a transmitter is limited to that value which will cause a maximum deviation of 40 kilocycles either side of the resting frequency. This makes available a total of 80 kilocycles, known as the *carrier swing,* over which the frequency of any one station may vary. There is also provided a band of 20 kilocycles for separation purposes between channels. This 20-kilocycle band is called the *guard band.* Thus, the channel allotted to each station consists of two deviation ranges of 40 kilocycles each, plus half the guard band on either side, or a total of 100 kilocycles. However, with any of the systems of obtaining frequency modulation used at the present time, the amount of deviation obtained at the point of modulation is small as compared with that required for successful transmission of f-m signals. In order to increase the amount of initial deviation to a suitable value, a system of frequency multiplication is used. If two frequencies, such as 6.00 and 6.025 megacycles, having a frequency difference of 25 kilocycles, are applied to the input of a broadly tuned tripler, the output frequencies will be 18 and 18.075 megacycles, respectively. There is now a difference of 75 kilocycles between these two frequencies, or three times the original frequency difference. The varying frequencies produced at the modulating point are, therefore, applied to a series of multipliers, and the amount of initial frequency change, or deviation, obtained is multiplied to a suitable value before the signal is applied to the power amplifier and then to the transmitting antenna. The circuits of the multiplier and power amplifier are conventional and need no further discussion here.

f. In amplitude modulation the amplitude of the carrier varies between zero and twice its normal value for 100-percent modulation.

There is also a corresponding change in power; consequently, additional power must be supplied to the carrier during modulation peaks. Hence, the tubes cannot be operated at maximum efficiency at all times. In frequency modulation, however, so-called 100-percent modulation has a different meaning. As shown in figure 198③, the amplitude of the signal remains constant regardless of modulation, since the modulating signal varies only the frequency of the oscillator. Therefore, the tubes may be operated at their maximum efficiency at all times. This represents one of the important advantages of frequency modulation. Modulation of 100 percent in frequency modulation indicates a variation of the carrier by the amount of the full permissible deviation: from *RO* to *A″* or *B″* in the graphic diagram of figure 199. The line *RO* represents the resting frequency, which will be assumed to be 20 megacycles. If the oscillator producing this frequency is

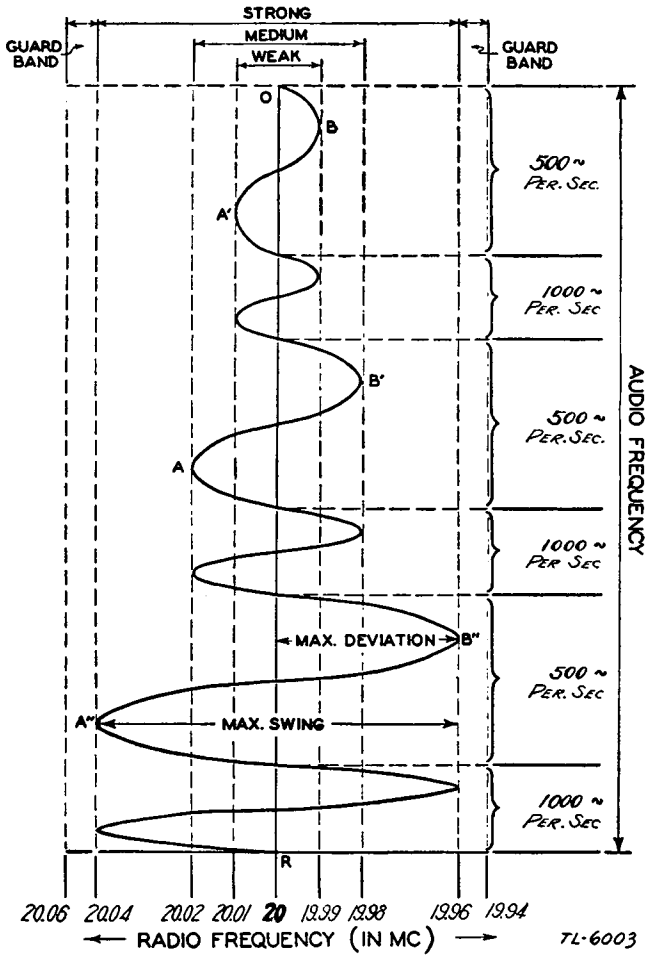

Figure 199. Graphic review of principles of frequency modulation.

modulated with a weak audio signal of 500 cycles, the oscillator frequency will vary from the resting frequency to, for the sake of an example, 19.99 megacycles, then back across the resting frequency to 20.01 megacycles, and back to the resting frequency at a rate of 500 times per second. If the frequency or pitch of the modulating signal is changed to 1,000 cycles per second (the amplitude remaining the same), the swing between A and B will occur at a rate of 1,000 times per second. Increasing the amplitude of the modulating audio signal to a medium value for each of these two frequencies, will increase the deviation to A' on one side of RO, and to B' on the other. The rates of frequency change will still be 500 to 1,000 times per second, respectively. Increasing the modulating signal amplitude to cause the maximum carrier swing between points A'' and B'' gives the maximum allowable deviation, or frequencies of 19.96 and 20.04 megacycles, respectively. The rate of change again will depend on the frequency of the modulating signal. The frequencies between 19.96 and 19.94 megacycles and between 20.04 and 20.06 megacycles are the guard bands set aside for separation between adjacent station channels.

129. Methods of Frequency Modulation

a. A successful f-m transmitter must fulfill two important requirements. The frequency deviation must be symmetrical about a fixed frequency, and the deviation must be directly proportional to the amplitude of the modulation and independent of the modulation frequency. There are several methods of frequency modulation which fulfill these requirements. The arrangement discussed in paragraph 128, known as a *mechanical modulator,* is the simplest system of frequency modulation, but is seldom used. The two important types of frequency modulation used in Army f-m radio equipment are known as the *reactance-tube modulating system* and the *Armstrong phase-modulating system.* The main difference between these two systems is that in the reactance-tube modulation method the r-f wave is modulated at its source (the oscillator), while in phase modulation the r-f wave is modulated in some stage following the oscillator. The results of each of these systems are the same; that is, the f-m wave created by either

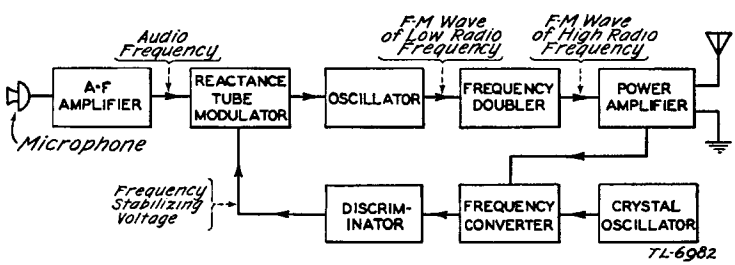

Figure 209. Block diagram of reactance tube f-m transmitter.

system can be received by the same receiver. Each of the two systems of frequency modulation described in *b* and *c* below is treated in greater detail in paragraphs 133 and 134.

b. The *reactance-tube system* of frequency modulation is shown in the block diagram of figure 200. In this system the oscillator is self-excited, usually operating in a Hartley circuit. Another tube, called the *reactance tube,* is connected in parallel with the tank circuit of the oscillator stage. By means of a suitable circuit, this reactance tube can be made to act as either a capacitive or inductive reactance, and this reactance is varied in accordance with the audio (modulating) frequency. The frequency of the oscillator is changed because of the changing reactance connected across its tank circuit, and thus a f-m signal appears in the output of the oscillator stage. This carrier (with frequency modulation) is passed through a frequency doubler, or multiplier stage, to increase the carrier frequency and deviation ratio. A power amplifier feeds the final signal into a suitable antenna. To keep the transmitter operating on its assigned frequency, a method of frequency stability is obtained by comparing the output of the transmitter with a standard crystal-controlled oscillator, and feeding back a suitable *correcting voltage* from a frequency converter and discriminator stage (par. 130).

c. The Armstrong phase-modulation system is shown in the block diagram of figure 201. This transmitter has an oscillator whose frequency is held at a constant value by means of a quartz crystal. This constant-frequency wave passes through an r-f amplifier which builds

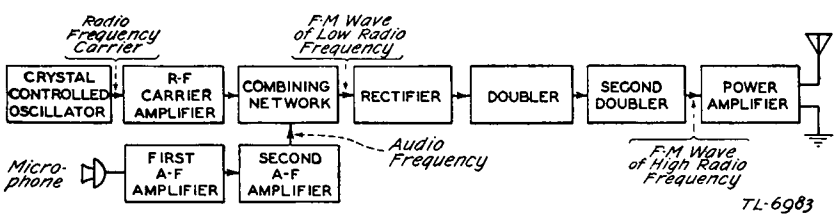

Figure 201. Block diagram of Armstrong f-m transmitter.

up the amplitude of the wave. The audio (modulating) frequency is applied to the r-f carrier by means of a combining network. The output of the combining network (r-f carrier resting frequency, plus carrier deviations) is fed into a series of class *C* r-f amplifier stages whose plate circuit is tuned to double the frequency of the grid circuit; resulting in frequency doubling or multiplying. The output wave, with high carrier frequency and high deviation, is applied to the antenna. The audio frequency applied to the modulating stage must be passed through a network which makes the audio amplitude inversely proportional to the audio frequency. The complete operation of the various stages in an Armstrong phase-modulation system is discussed in paragraph 134.

130. Reception of f-m Waves

a. While the use of frequency modulation in the transmitter greatly simplifies the problem of modulation, frequency modulation in the receiver necessitates a circuit somewhat more complicated than would be necessary for amplitude modulation. The f-m receiver employs two types of stages not found in an a-m receiver: a *limiter* and a *discriminator,* or frequency detector. The superheterodyne receiver is used exclusively for frequency modulation because of the high amplification necessary in many cases to bring the amplitude of weak signals up to that value where they will be affected by the action of the limiter.

b. One of the basic requirements in an f-m receiver is that it be able to pass the required band of frequencies created by the transmitter; this band width may be as much as 80 kilocycles. A second requirement, and one which is necessary if the full noise-reducing possibilities of the f-m system are desired, is a limiting device to remove all amplitude variations of the received signal, so that the signal varies *only* in frequency before it reaches the detector. A third requirement is that the detector (discriminator) be capable of converting frequency variations into amplitude variations.

c. A comparison between a superheterodyne receiver designed for the reception of amplitude modulation and one designed for the reception of frequency modulation is shown in figure 202. In both types of

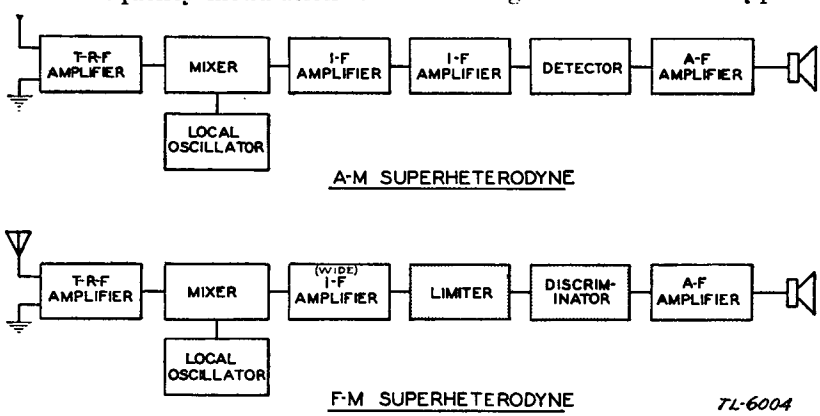

Figure 202. Block diagrams showing comparison between a-m and f-m superheterodyne receiver.

receivers there is a t-r-f stage of amplification, and an h-f oscillator and mixer followed by one or more stages of i-f amplification. The respective stages of both sets are similar in purpose and circuit design up to this point, and the only differences are in the tuned circuits, which are designed to pass a much wider band of frequencies in the case of the frequency-modulation receiver. In the next two stages are found the two main differences between the receivers. The *limiter* of the f-m set

may be considered as a special type of i-f amplifier, while the *discriminator* is a special type of detector. The audio-output signals of the detector of the a-m set and the discriminator of the f-m set are applied in each case to an audio amplifier and then to a speaker.

131. The Limiter

a. The limiter in an f-m receiver serves to remove amplitude modulation, and to pass on to the discriminator an f-m signal of constant amplitude. The circuit of the limiter is shown in figure 203; the rest of the receiver is shown in block-diagram form.

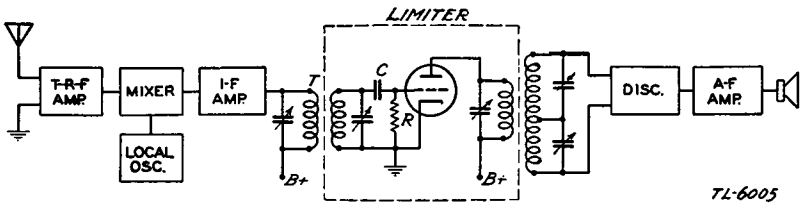

Figure 203. Simplified diagram of limiter.

b. The f-m signal leaving the transmitting antenna is varying in frequency according to an audio-modulating signal, but is constant in amplitude. As the signal travels between transmitting and receiving antennas, however, it is combined with natural and man-made noises, or static disturbances, which cause variations in the amplitude of the modulated signal. In addition, there are variations caused by fading of the signal, such as might be encountered in moving vehicles. All of these undesirable variations in the amplitude of the f-m signal exist, and are amplified as the signal passes through successive stages of the receiver up to the input (*T*) of the limiter (fig. 203). This condition of the signal, where both frequency modulation (desired) and amplitude modulation (undesired) are present at the same time, is shown by the waveform of figure 204②. It is the purpose of the limiter to eliminate these variations in amplitude due to noise impulses before the f-m signal is applied to the detector or discriminator. The character of the signal after leaving the limiter should be as indicated in figure 204③, where all amplitude variations have been removed, leaving a signal which varies in frequency only.

c. The limiter circuit of figure 203 is similar to the grid-resistor-biased circuits studied previously. The limiter tube is of the sharp cut-off type and is operated with very low plate voltage and with grid-leak bias, so that it overloads easily. With the lower plate voltage, a larger grid current will flow when the signal is applied. This aids *clipping action.* Upon inspection of the circuit it will be seen that no initial bias exists in the circuit. As the first alternation of the signal, regardless of strength, is applied from grid to cathode, it begins to drive the grid positive, causing a flow of grid current. This flow

of current, during the positive peaks of the signal, loads tuned circuit T. Because of this loading of the tuned circuit there is a drop, or clipping, of the voltage across it during the positive peaks. This action may be compared to that in a generator, where an increase in current drawn from it will cause a decrease in voltage output because of the loss across the internal impedance of the generator. The positive

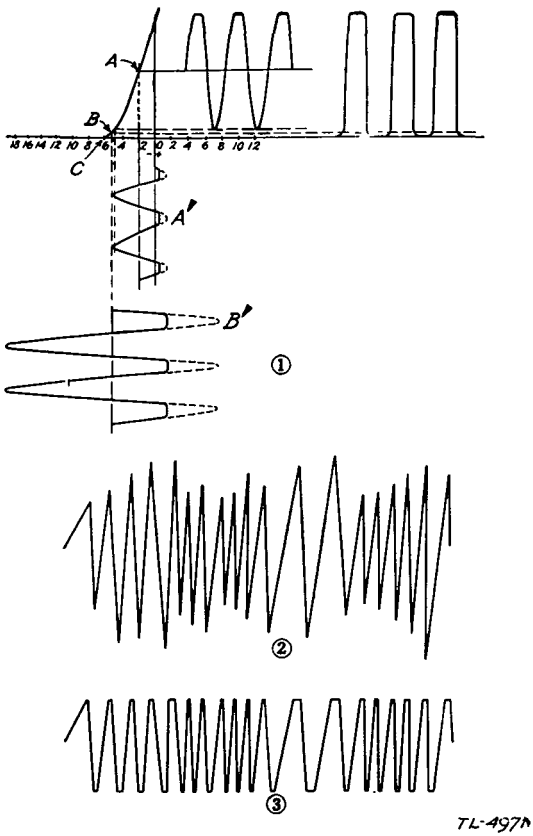

Figure 204. Limiter action in f-m receiver.

peaks are, therefore, clipped by action of the grid circuit. As in all grid-resistor-biased circuits, the current flowing in the grid circuit during the positive peaks, with the aid of grid capacitor C, develops a d-c voltage drop across grid resistor R. The value of this drop depends on the amount of grid current, which in turn depends on the signal strength. For example, assume a weak input signal A' is applied to the circuit, as in figure 204①. The positive peaks of this wave will be clipped in the grid circuit because of grid-current flow. This current will produce a bias which will change the operating point from zero bias to some point such as A. The negative peak in this case will not go

beyond cut-off and there will be no clipping of the negative peak. Notice that there has been some amplification, without further clipping, over that accomplished in the grid circuit. As the amplitude of the grid-input signal is increased, as at B' in figure 204①, an increased grid current flows. This produces a greater drop across the grid resistor, putting a greater bias on the tube, as indicated at B. Since the negative peaks now swing beyond cut-off (point C), there is no flow of plate current during that period. Consequently, the negative peaks are clipped in the plate circuit. From this discussion it can be seen that the input signal must reach a certain strength before clipping of both positive and negative peaks occurs. Because of this action of the limiter, there is an f-m signal of *constant amplitude* in the output of this stage, which can next be applied to the detector or discriminator.

132. The Discriminator

a. The second major difference between amplitude-modulation and frequency-modulation receivers is represented in the detector or discriminator. The detector in an amplitude-modulation receiver interprets the *amplitude variations* of the amplitude-modulated r-f energy in terms of an audio signal. In the f-m receiver, the discriminator interprets the *frequency variations* of the frequency-modulated r-f energy in terms of an audio signal.

b. The discriminator of a typical f-m receiver is shown in figure 205. In this circuit the transformer used has a tuned primary L_1 and two

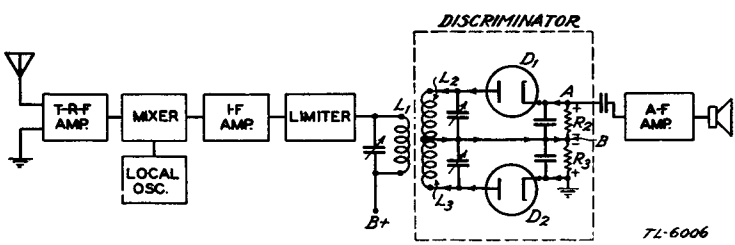

Figure 205. Simplified diagram of discriminator.

tuned secondaries L_2 and L_3. The primary of this transformer is tuned to the center of the i-f pass band. This frequency corresponds to the *resting frequency* of the f-m signal as it is received at the antenna. Secondary L_2 is tuned above this resting frequency by an amount greater than the deviation of the signal, and L_3 is tuned below the resting frequency by the same amount. L_2 is connected in series with R_2 across diode D_1. L_3 is connected in series with R_3 across diode D_2. Since the direction of the electron flow in each diode circuit is as shown by the arrows, the polarity of the voltage drop across each load resistor, R_2 and R_3, is positive at the ends toward the cathode and

negative at the ends toward the plates as indicated. Both resistors are connected at point *B*, which is the negative side of the voltage across each resistor. The two voltages, therefore, oppose each other, and the resultant voltage between point *A* and ground will be the difference between the two. The resultant polarity will be the polarity of the greater of the individual voltages. Figure 206① shows possible resonance curves, *A* and *B*, for each tuned secondary, L_2 and L_3, respectively. Their resonant frequencies are shown to be 5.95 and 6.05 megacycles. The curves indicate the signal voltages developed across each tuned circuit as the frequency applied to the transformer varies through the values indicated. The only point at which both voltages are equal is at point *X*, which represents the resting frequency of 6 megacycles. Since curves *A* and *B* represent the voltage applied to D_1 and D_2, respectively, and the load resistors are connected in series opposition, the resultant voltage between point *A* and ground can be shown by figure 206②. From this *S curve* it can be seen that if, in 1/500 of a second, the frequency-modulation wave varies from the resting frequency of 6 megacycles to 5.96 megacycles, back to the resting frequency, on up to 6.04 megacycles, and back again to the resting frequency, the voltage developed between point *A* and the ground (fig. 205) will be the 500-cycle audio wave indicated to the right of figure 206②. The frequency variations of a f-m wave are thus changed into an audio signal in the form of amplitude variations.

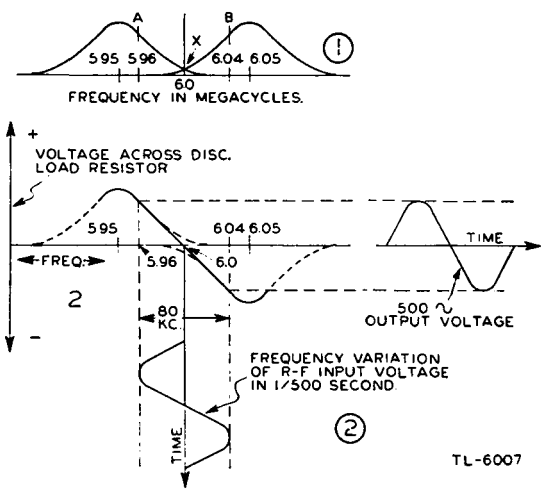

Figure 206. Voltage waves across discriminator load resistances.

c. Another method of detecting f-m signals is to apply the incoming signal to a circuit tuned to a *slightly different* frequency from that of the signal. A higher frequency will cause an increase in the current in the tuned circuit, and a lower frequency will cause a corresponding decrease in current. This current change converts the frequency varia-

tion into a current-amplitude variation, which can then be passed through a normal amplitude-modulation detector. This explains why f-m signals may be received with amplitude-modulation receivers under certain conditions. The quality resulting from such detector action, however, is very poor, because of the nonlinear action of the circuits involved.

d. The most widely used form of discriminator is known as the Foster-Seeley circuit, a variation of the basic discriminator described above. The action of the Foster-Seeley discriminator in an operating circuit is described in paragraph 133*j*.

e. The audio output of the discriminator stage is almost always applied to one or more stages of audio amplification before reaching the loudspeaker.

133. Circuit of Reactance-tube Transmitter-receiver Set

a. The circuit diagram of a typical Army f-m combined transmitter and receiver is shown in figure 207. This equipment, known as the SCR–509, is a portable f-m set in which the transmitter and the

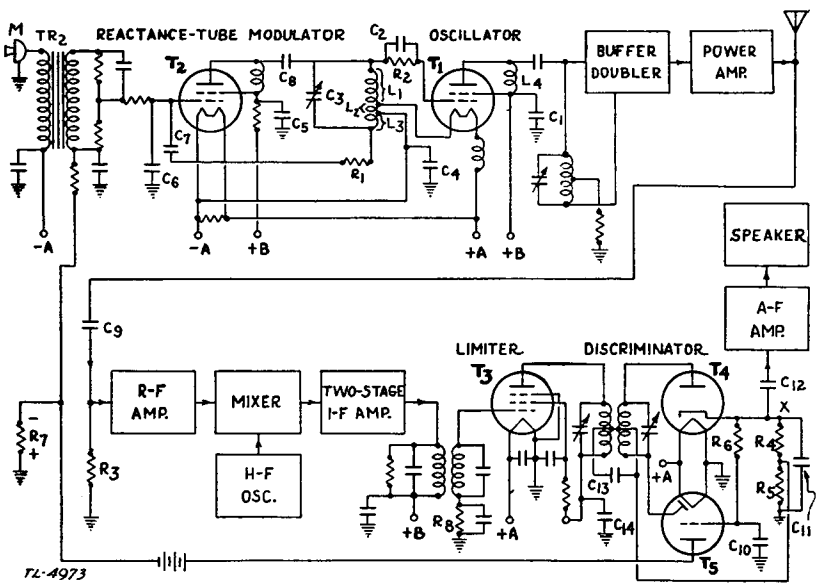

Figure 207. Simplified circuit diagram of Radio Set SCR–509.

receiver are built into the same chassis. The circuit has been simplified by showing certain conventional and well-known stages in block diagram form.

b. The operation of the transmitter circuit will be considered first. The stages of this transmitter include a reactance-tube modulator, an electron-coupled oscillator-doubler, a push-push doubler, and a push-pull power amplifier feeding an r-f signal into the antenna.

c. The oscillator section of a simple electron-coupled oscillator-doubler consists of a conventional Hartley circuit in which L_1 is the grid section of the coil and L_2 is the plate section (fig. 207). The screen grid of the tube acts as the plate of the oscillatory section of the circuit. The plate circuit of the tube doubles all frequencies created by the oscillator and also provides coupling to the buffer stage.

d. Frequency modulation is accomplished in this transmitter by means of a reactance-tube modulator stage. Tube T_2 is shunted across the oscillator tank through C_8 and the filament circuit, and is then made to act as a capacitor. By varying the amount of current flowing through this tube, its capacitive effect across the oscillator tank can also be varied.

e. The audio frequency created by microphone M (fig. 207) is coupled through the transformer to the grid of the reactance-tube modulator T_2. The current through the tube will thus vary in accordance with the a-f signal, thereby varying the capacitive effect of the tube on the oscillator tank, and finally varying the frequency of the oscillator at an audio rate. This f-m signal is doubled in the plate circuit of the oscillator and fed to the grids of the push-push doubler, thence to the power amplifier, and finally into the antenna.

f. The amount of linear frequency deviation obtainable by any f-m system is limited. For this reason, the oscillator is operated at a low frequency, then frequency modulated and doubled, and the output fed to a buffer-doubler stage. If two different frequencies are fed into a doubler, for example, 10 megacycles and 10.015 megacycles, the resulting frequencies of 20 and 20.030 megacycles differ by 0.030 megacycles, which is *twice* the original difference. In this transmitter the oscillator is operated at some frequency between 5 and 6.97 megacycles. Under modulation, the frequency is caused to deviate by amounts up to 9 kilocycles. This f-m signal is doubled in the plate of the electron-coupled oscillator circuit and fed to the grids of the push-push doubler. In the plate circuit of the doubler, which is tuned to twice the frequency of its grid circuit, a resting frequency four times the original oscillator frequency, and a deviation of 36 kilocycles, which is four times the original deviation, are obtained. This signal voltage is transformer-coupled to the power amplifier.

g. In the reactance-tube modulator system, frequency modulation of the carrier is accomplished at its source, the oscillator. Crystal control of the oscillations under this condition is impossible. The oscillator may not return to its *resting frequency* at the end of each cycle of audio signal, but may drift and begin to vary around some frequency other than the resting frequency. To avoid this, some method of frequency stabilization is necessary when using the reactance-tube modulator system. The stabilization system used with this transmitter is described in *k* below.

h. The receiver section of Radio Set SCR–509 is shown in the lower half of figure 207. The conventional circuits are shown in block diagram form for simplicity. The same antenna is used for both the transmitter and receiver. The received f-m signal is applied through capacitor C_9 and ground across resistor R_3 between the grid and filament of the r-f amplifier. The r-f stage is tuned impedance-coupled to the grid of the mixer stage. The oscillator signal is applied to another grid of the mixer. The i-f signal produced in the plate circuit of the mixer is transformer-coupled to the grid-cathode circuit of the first i-f amplifier. The signal produced in the plate circuit of this stage is transformer-coupled to the grid circuit of the second i-f amplifier. The amplified signal in the plate circuit of this stage is transformer-coupled to the limiter-grid circuit. Up to this point, the circuits of each individual stage are smilar to those used in corresponding stages of a receiver designed for reception of a-m signals. There is a difference, however, in the actual construction of the tuned circuits. Some method, such as applying the proper degree of coupling and shunting the tuned circuits with a resistor, is used to provide the proper band-pass characteristic.

i. The limiter circuit of this receiver is of the conventional type described in paragraph 131. Clipping of the positive peaks is accomplished in the grid circuit because of grid-current flow; negative peak clipping is accomplished in the plate circuit because of plate-current cut-off on those peaks. It is intended that the large number of amplifier stages used in the first part of the set will bring the amplitude of any weak signals within the limiting action of the tube. Referring to figure 207, if too strong a signal is applied to the limiter, the grid-current flow will cause a large voltage drop across grid resistor R_8, thus blocking the limiter. To prevent this, the r-f stage is so arranged that the stronger signals will cause grid current to flow through resistor R_3 with consequent initial clipping of these signals, thus reducing the signal strength to a value which will permit correct operation of the limiter. The signal leaving the limiter will then have an almost constant amplitude and the output of the discriminator will be affected only by frequency variations of the signal.

j. Because of the difficulty of adjustment, the double-tuned type of f-m discriminator (par. 132*b*) is not used in f-m equipment of recent manufacture. As in the receiver of Radio Set SCR–509, most modern f-m receivers requiring a discriminator circuit will use some form of the Foster-Seeley circuit (fig. 207). This type of discriminator operates from a center resting frequency, thus producing a zero output voltage. On either side of this frequency the discriminator gives a voltage (across load resistors R_4 and R_5) of a polarity and magnitude which depend on the direction and amount of frequency shift. The Foster-Seeley circuit requires only two tuned circuits, and the opera-

tion of the circuit results from the phase relationships existing in a transformer having a tuned secondary. These phase relationships cause unequal and varying voltages to be applied to the two diodes, and a d-c voltage proportional to the difference between the r-f voltages applied to the two diodes will exist across the two series load resistors. As the signal frequency varies back and forth across the resonant frequency of the discriminator, an a-c voltage of the same frequency as the original modulation is developed and passed on to the audio amplifier through capacitor C_{12} (fig. 207).

k. In the transmitter shown in figure 207, the frequency of the oscillator is varied at its source. Direct crystal control of the oscillator is therefore impossible, since the frequency of a crystal cannot be varied instantaneously to any great extent. The oscillator is subject to drift as a result of mechanical vibration, and voltage and temperature changes. Since an oscillator designed to operate around a resting frequency of 5 megacycles may begin to operate at some frequency above or below 5 megacycles, some method of stabilization must be used to prevent this. In the SCR–509, the receiver acts as a frequency stabilizer when the transmitter is operating. Some of the signal is taken from the output of the transmitter and applied through C_9 (fig. 207) to the grid circuit of the r-f stage of the receiver. This signal from the transmitter is very strong. To avoid blocking the limiter, the r-f stage is designed to provide some limiting action on strong signals as a result of grid-current flow. The signal is passed on to the mixer, where it is heterodyned with the signal created by the receiver crystal-controlled, high-frequency oscillator. This stable crystal-oscillator frequency is called the *reference frequency* of the stabilizing system, because it is used as the standard of comparison for stabilization of the transmitter. The intermediate frequency produced is passed on through the succeeding stages to the discriminator. When modulation of the transmitter oscillator occurs around its intended resting frequency, the signal applied to the discriminator will vary equally to either side of the frequency to which the discriminator transformer is tuned. The audio signal produced between point X and ground (fig. 207) will vary equally to the positive and negative sides of zero voltage—from A to B (fig. 208). This signal is applied through the audio filter (fig. 207), consisting of R_6 and C_{10}, to the grid of the triode section of T_5. The filter removes the audio component, leaving no control voltage for the grid. The triode draws its normal plate current and causes a normal drop across R_7, which thus provides normal biasing of reactance tube T_2 (fig. 207). If, because of drift, modulation of the oscillator occurs around a frequency lower than the intended resting frequency, the intermediate frequency of the receiver will vary around some frequency lower than the resonant frequency of the discriminator. The discriminator audio-output voltage

will then vary equally to either side of some positive voltage, which will be assumed to be 3 volts, as indicated from B to C in figure 208. The audio component is filtered out by R_6 and C_{10}, resulting in an average positive control voltage of 3 volts applied to the grid of the triode section of T_5. This causes an increase of current through R_7 in the plate circuit of the tube. The increased drop produced by this current increases the bias on the reactance tube, thus decreasing the transconductance of the tube, and thereby decreases the capacitive effect of the tube on the oscillator tank. This results in a return to approximately the proper resting frequency. This correcting, or

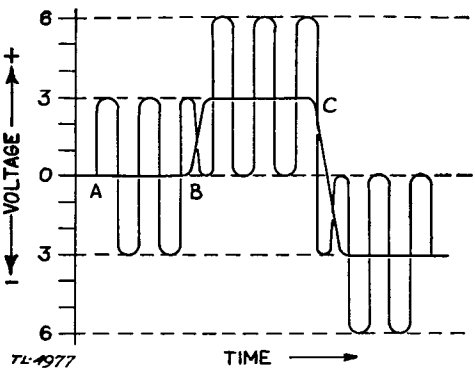

Figure 208. Audio signal resulting from modulation of resting frequency.

stabilizing, action is extremely rapid. An oscillator drift to a higher resting frequency results in a negative average voltage. This decreases the current through R_7 (fig. 207), thus decreasing the capacitive effect of T_2 on the oscillator tank, and thereby returns it to approximately the proper resting frequency. This method of stabilizing is very important in f-m circuits employing self-excited oscillators.

134. Circuit of Phase-modulated Transmitter-receiver Set

a. The noise-reducing advantages of frequency modulation have been put to practical use in the Army f-m transmitter and receiver set designed for communication between tanks. In spite of the high level of noise-producing electrical disturbances encountered in armored vehicles, very satisfactory communication can be accomplished with this equipment, known as the SCR–508. A simplified circuit diagram of the f-m transmitter is shown in figure 209, and a block diagram for the f-m receiver is shown in figure 213.

b. The operation of the transmitter circuit will be considered first. Since most of the stages shown in figure 209 have been studied previously, they are here shown in block-diagram form for purposes of

simplicity. The only part of the transmitter that is different from circuits previously discussed is shown in circuit form. The radio circuit, from the frequency modulation standpoint, is as simple as it looks.

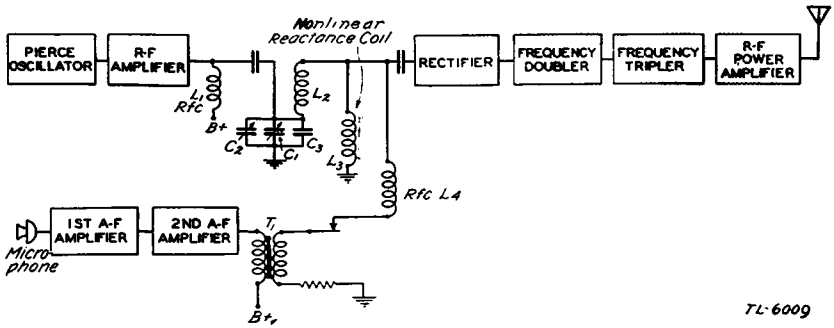

Figure 209. Simplified circuit diagram of f-m transmitter of Radio Set SCR-508.

c. The first stage of the transmitter is a crystal-controlled oscillator, using the stable and dependable Pierce-oscillator circuit. The Pierce oscillator is a Colpitts oscillator in which the inductance of the tank circuit is replaced by a crystal. This oscillator operates with any one of 80 different crystals whose frequencies range between 370.37 and 516.667 kilocycles. A selected 10 of these crystals are installed in a special crystal compartment which has a heating element to help maintain crystal-frequency stability. Any one of these channels, represented by the 10 crystals, may be selected in an instant by means of a push-button mechanism.

d. The output of the crystal oscillator is coupled to the first r-f amplifier or buffer stage. Except for the plate tank, this stage is a conventional pentode r-f amplifier with grid-resistor biasing. The purposes of the stage are to provide some amplification and to isolate the oscillator from the other stages. The plate circuit of the buffer is unusual, and is the only part of the transmitter that requires detailed explanation.

e. The buffer stage is shunt fed through coil L_1. The plate-tuned circuit consists of coils L_2 and L_3 in series. These coils are tuned to the oscillator frequency by means of the variable capacitor C_1 and the trimmer C_2. C_3 is a temperature-compensating capacitance. It can be seen that part of the r-f voltage of the buffer plate circuit will be developed across L_2, and part across L_3. In addition to the r-f current flowing through L_3, the output of the audio section, consisting of the microphone, the first audio, second audio, and output transformer T_1, is applied through the r-f choke L_4 and grounded across L_3. This coil, known as the *nonlinear reactance-modulator coil,* provides modulation for the transmitter. The operation of this coil is based on its char-

acteristic of becoming saturated as a small amount of current flows through it.

f. Briefly reviewing some of the facts concerning saturation of a coil, it will be remembered that when current flows through a coil, there is set up about the coil a magnetomotive force, the intensity of which depends upon the amount of current flowing through the coil. This force in a magnetic circuit may be compared to the *voltage* of an ordinary electrical circuit. This magnetomotive force sets up a flux about the coil, which is comparable to the *current* of an ordinary circuit, and has a density which depends on the *reluctance* of the core of the coil. The core reluctance, which may be compared to the *resistance* of an electrical circuit, has a value which depends on the material forming the core. The reluctance of an air core remains constant regardless of current. This results in an increase of flux density which is in proportion to the increase in both current and magnetomotive force. When a magnetic substance makes up the core of a coil, however, the reluctance is no longer constant, regardless of current. Instead, as a current begins to flow, the reluctance is very low and the flux is very high compared to that existing in an air-core coil under similar conditions. With an increase in current, the reluctance gradually increases and the rate-of-flux increase is reduced. After the current reaches a certain value, which depends on the core material used, the reluctance increases very rapidly until its value approaches that of air. At this value, any further increase in current will produce no appreciable increase in flux. This condition is known as *saturation.* *B–H* curves, in which *magnetizing force* is plotted against *flux,* are shown for both Permalloy and Armco iron in figure 210. Note how quickly Permalloy reaches

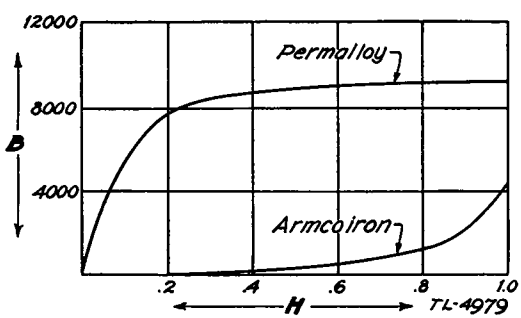

Figure 210. B–H curves for nonlinear reactance modulator coil.

saturation in comparison to Armco iron. The nonlinear modulator coil used in this f-m transmitter is a spiral of wire wound around a small circular core of Permalloy ribbon. Because of this Permalloy material, the core reaches saturation with relatively small values of r-f current applied to it. As shown in figure 210, the *B–H* curve showing flux change below saturation is *very steep.* A sine-wave voltage is applied

across the coil, and as the current through the coil increases from zero to some value such as A (fig. 211), there is a rapid building up of flux until the core becomes saturated. As the current increases from the

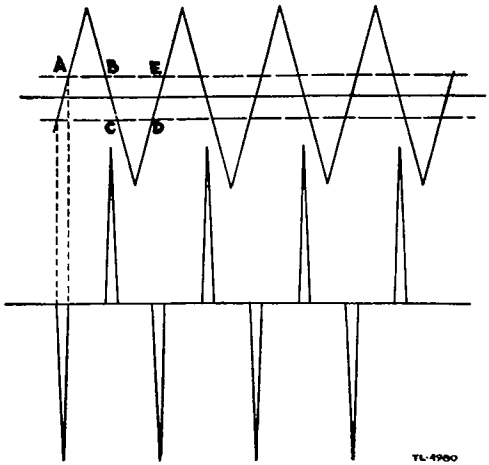

Figure 211. Voltage pulses developed across nonlinear modulator coil.

value indicated by A through its maximum value and decreases to a value indicated by B, there is no change of flux, since the core remains saturated during this period of current change. As the current decreases below the saturation point B (fig. 211) to zero value, there is a rapid change of flux in the opposite direction. As the current increases from zero in the opposite direction to C, the flux continues the rapid change and again reaches saturation. As the current continues its increase from C to its maximum value and then decreases to a value indicated by D, there is again no change of flux, since the core is saturated during this period of current change. As the current decreases below the saturating value to E, there is again a rapid change of flux. This change of flux continues cycle after cycle. It will be remembered that an electromotive force is induced only by a changing flux, and also that the value of this electromotive force depends on the rapidity of the change of that flux. Consequently, there is no electromotive force induced during those periods of the cycle between A and B, C and D, etc., since there is no change of flux during these periods. However, during the intervals between B and C, D and E, etc., there is a very rapidly changing flux, resulting in the induction of a pulse of voltage of high amplitude, as shown in the lower part of figure 211. Notice that each of the voltage pulses occurs exactly 90° after the current peaks. Since this 90° phase difference is constant with each cycle when a pure r-f voltage is applied, there is no change in frequency. However, as has been pointed out with respect to figure 209, in addition

to the r-f currents flowing through L_3, the audio-output currents also flow through it. The audio currents and the r-f currents are shown in figure 212① and ②, respectively, and they form a resultant current, as indicated in figure 212③. As can be seen from this diagram, the r-f currents no longer go through their zero values at the same time

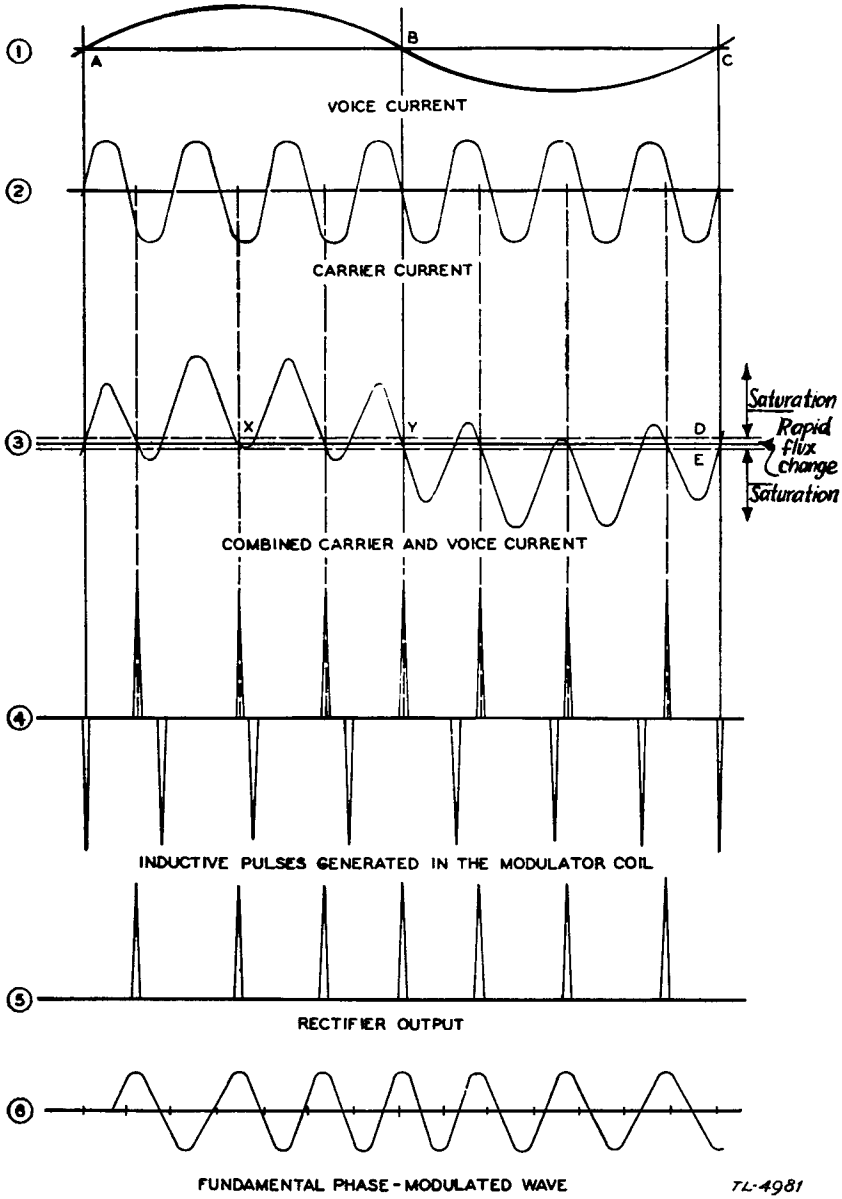

Figure 212. Development of phase-modulated wave by use of nonlinear modulator coil.

intervals as the original r-f current. Instead, it is found that the intervals are different for each cycle.

g. Referring to figures 212② and ③, with the aid of the broken lines between them, the resultant current ③ goes through its zero values at the same time as the original carrier current ② when the audio cycle is going through its zero values. This is indicated by points *A, B,* and *C*. During the positive alternation of the audio cycle, the zero values of the resultant current ③ occur later (by varying degrees) than the corresponding zero value of the original carrier current. On the negative alternation of the audio cycle, the zero values of the resultant current ③ occur earlier (by varying degrees) than the corresponding zero value of the original carrier current ②. As shown in figure 212④, the resulting inductive voltage pulses will appear as this resultant current goes through its values around zero. This is indicated between lines *D* and *E* of ③. These voltage pulses occur in both a positive and negative direction. The net result is that the time interval between the positive voltage pulses of ④ is maximum as the audio cycle is changing from its negative to its positive alternation, and minimum as the audio is changing from its positive to its negative alternation. On the peaks of both the positive and negative alternations, the period between the pulses reaches an intermediate value. In this way the low, high, and resting frequencies are produced. By inspection of ④, it is seen that the high frequencies in the positive direction occur at the same point as the low frequencies in the negative direction, and the low frequencies in the positive direction occur at the same point as the high frequencies in the negative direction. The resting frequencies of both occur at the same points. The difference in amplitude of the voltage pulses is due to the difference in the rate of current change at these points, as it goes through the area between saturation limits, points *D* and *E* in ③. The rate of current change at point *X* in ③ is less than at point *Y*. These variations in amplitude, however, are suppressed by limiter action.

h. Because of the time relationship between the positive and negative pulses, one or the other must be removed by rectification, in order to avoid serious frequency distortion. After rectification, the signal will appear as indicated in ⑤, with the time interval between each pulse gradually increasing to a maximum and then decreasing to a minimum at an audio rate. When these voltage pulses are applied to a tuned circuit, because of the flywheel effect, a smooth wave is created, having both positive and negative alternations. This wave will have the same varying time interval between positive peaks as the applied voltage pulses. This wave is shown at ⑥. The small vertical lines along the wave axis designate the points at which the original wave of ② passed through zero, thus aiding in visualizing the phase change between the waves of ② and ⑥. For the sake of clearness in the illustration, the phase change has been exaggerated.

i. Affecting a current or voltage by some means so that the time intervals at which it goes through its instantaneous values are changed is known as a *phase* change. During the cycle in which this change occurs, the period of the cycle has been either increased or decreased, and during that particular cycle it is comparable to a lower or higher frequency. In the system of modulation just described, such a change occurs in varying degrees in each succeeding cycle. Thus, the period of each cycle after modulation is different from that of the cycle preceding or following it, even though the periods of each cycle are originally identical. Any process which changes the frequency of the r-f energy already generated at a constant frequency is referred to as phase modulation.

j. The inductive voltage pulses shown in figure 212④ (from inductor L_3 in fig. 209) are applied across the grid cathode of the rectifier. The circuit of this rectifier is that of a conventional grid-biased class *C* amplifier. The wave created by the reactance coil has a strong ninth harmonic content. The plate circuit of the rectifier is tuned to this harmonic, multiplying by nine the small frequency, or phase variation, caused by the coil. The output of the rectifier is transformer-coupled to a conventional single-ended doubler whose plate circuit is tuned to the second harmonic of the frequency on its grid, or the eighteenth harmonic of the phase-modulated signal at the output of the modulator coil. This doubler is transformer-coupled to a conventional one-tube tripler which increases to 54 the multiplication of the modulator coil output. The tripler is transformer-coupled to the power amplifier which has the ordinary grid-bias circuit.

k. Since modulation in the transmitter of the SCR–508 is accomplished after the r-f or buffer amplifier stage, the oscillator can be crystal-controlled, thus eliminating any necessity for frequency-stabilizing circuits. This is the main advantage of the phase-modulation method over the reactance-tube method. There is one characteristic of phase modulation that must be corrected before the final output of both the reactance-tube and phase-modulation systems are similar. In changing the frequency of a constant r-f voltage, the rate of *phase change,* and consequently the frequency, increases as the modulating frequency increases. For example, an audio frequency of 100 cycles and of a certain amplitude may cause a 2-kilocycle deviation. A frequency of 1,000 cycles with the same amplitude will cause a deviation of 20 kilocycles. If the modulating frequency is increased to 20 times the original 100 cycles, the 2-kilocycle deviation will be multiplied by twenty. In the SCR–508, the consequent increased emphasis on the high audio frequencies, known as the *rising characteristic* of phase modulation, is used to advantage to minimize the interfering effect of low-frequency sounds caused by mechanical and tank motor noises, which are picked up by the microphone and broadcast by the transmitter.

l. The receiver section of f-m Radio Set SCR–508 is shown in figure 213. The individual circuits of this receiver are, with two notable exceptions, much the same as those used in the receiver section of the SCR–509. The receiver of the SCR–508 employs a variation of the basic *limiter circuit* to cope with weak signals, and an entirely new type of *squelch circuit* is introduced for controlling volume when no intelligence is being received. The discriminator used in this f-m receiver is a variation of the circuit already described in connection

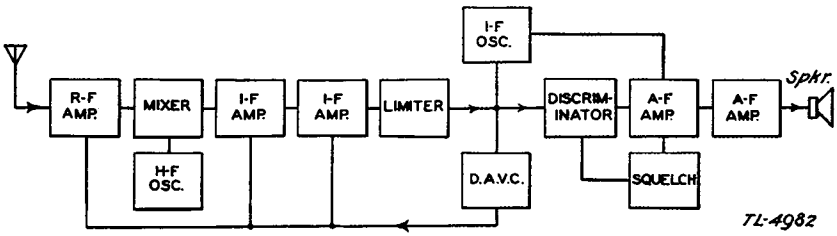

Figure 213. Block diagram of f-m receiver of Radio Set SCR–508.

with the SCR–509. The intermediate-frequency oscillator uses a Hartley circuit, which provides a signal for setting up the 10 push-button frequencies and enabling emergency alignment of the receiver. At all other times this oscillator is made inoperative by means of a switch in its plate circuit.

m. A slight variation in the *limiter circuit* for this f-m receiver is shown in figure 214. This difference is the audio choke coil L_1 in the cathode circuit which is used to provide *inverse-feedback limiting* on signals too weak to be affected by the negative peak-clipping action of the tube. Weak signals will have their positive peaks clipped be-

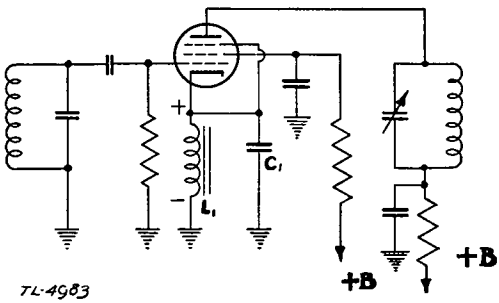

Figure 214. Simplified circuit diagram of limiter in receiver section of Radio Set SCR–508.

cause of the flow of grid current when the grid is driven positive. Since a signal may be too weak for its negative peak to drive the tube to cut-off, negative peak clipping will not be accomplished through the normal peak-limiting action of the tube. An audio component

caused by amplitude variation will then appear in the plate circuit. Choke L_1 and capacitor C_1 in the cathode circuit offer a high impedance to this audio component, and produce a corresponding voltage drop. This voltage is in the grid-cathode circuit and is positive at the cathode with respect to ground. It will tend, therefore, to make the grid more negative while the audio component at the grid is acting to make the grid more positive. This provides a degenerative, or canceling, effect on the audio component of the weak signals. With this arrangement, even the weak signals are of nearly constant amplitude when applied to the detector.

n. A *squelch circuit* is provided in this f-m receiver to eliminate any necessity for the operator's listening to the receiver noise between messages, or when the signal is not strong enough for successful reception. This type of circuit comes under the general heading of *control circuits,* which include automatic volume control, delayed automatic volume control, etc. The squelch circuit is not basically a frequency-modulation device, since it is also used in some amplitude-modulation receivers.

o. An understanding of the *squelch circuit* requires some knowledge of the noise, disturbance, or interference to be removed from the stages of the f-m receiver. If an f-m signal is of sufficient strength, sporadic static impulses will be superimposed on the carrier-frequency wave mainly in the form of amplitude variations, and these amplitude changes will be eliminated by the normal action of the limiter. However, if the f-m signal is *less than twice* the strength of the noise impulses, the resultant of this mixture, or combination, will be a complex wave which may have many of the *frequency* characteristics of the noise impulses. The clipping action of the limiter will not remove the noise component from such a signal. The limiter, alone, is also ineffective at a time when no r-f wave is being received and the antenna is exposed to noise impulses, since clipping the peaks will not eliminate the noise impulses completely.

p. Throughout the explanation of this circuit, reference will be made to figure 215, which shows a simplified diagram of the squelch tube T_1 and its associated circuits. The remainder of the f-m receiver is shown in block diagram form for simplicity. Resistor R_4 of the voltage divider is connected between grid and cathode of the squelch tube T_1 through a series-parallel network of resistors. This network consists of the series branch of R_{11} and R_9 in parallel with the branch R_{10} and R_{12}, and R_{13} and R_{14}. The series-parallel network consisting of R_9, R_{10}, R_{11}, and R_{12}, also forms the discriminator load. When there is no signal being applied to the discriminator, as, for example, between messages, there is no voltage developed across resistors R_9 and R_{10}. The only voltage in the grid circuit is that developed across R_4 of the voltage divider, thus causing a high current in the plate circuit

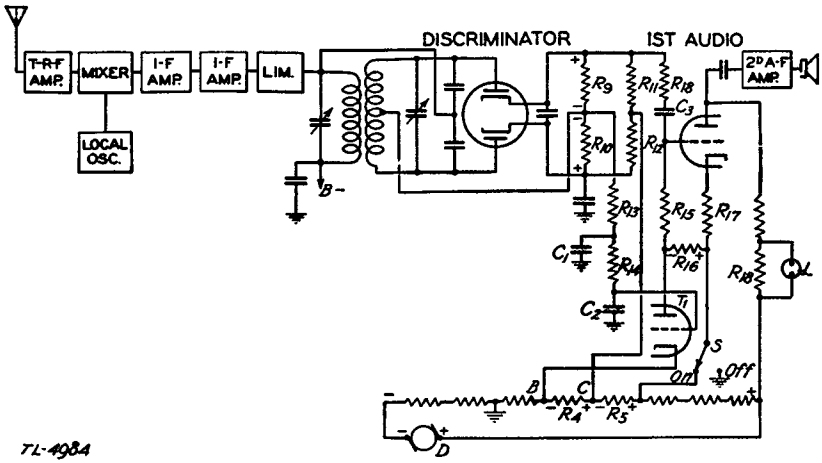

Figure 215. Simplified circuit diagram of squelch system used in f-m receiver of Radio Set SCR-508.

of tube T_1. The voltage for this plate circuit is obtained from across R_4 and R_5 of the voltage divider through R_{16}, which is also in the grid circuit of the first audio stage. The voltage developed across this resistor is great enough in magnitude and of the correct polarity, as indicated, to block the first audio stage. In this way noise impulses and hiss are prevented from reaching the speaker when no signal is being received. When a r-f signal is coming in through the antenna, there will be a voltage drop across R_9 and R_{10}, with the polarity indicated, as a result of normal discriminator action. These parallel voltages, in series with the voltage across R_4, are applied through R_{11} and R_{12} and the filter resistors R_{13} and R_{14} across the grid and cathode of T_1. The polarity of the R_9 and R_{10} voltages tends to make the grid of the squelch tube negative with respect to the cathode. The polarity of the R_4 voltage tends to make the grid positive with respect to the cathode. When the voltage across R_9 and R_{10} is great enough, as a result of a signal of sufficient strength, to overcome the voltage of R_4 and drive tube T_1 to cut-off, there will be no current in the plate circuit of T_1. There will be no voltage developed across R_{16}; the high negative bias is removed from the grid of the first audio stage, allowing it to go into normal operation. The purpose of the resistor-capacitor network consisting of R_{13}, R_{14}, C_1 and C_2 is to filter out all audio variations from the voltage developed across R_9 and R_{10} before it is applied to the grid of the squelch tube. The squelch circuit will then respond to the average strength of the signal, rather than to any instantaneous variations. When reception of the message has been completed and there is again no signal present at the antenna, there will be no voltage drop across R_9 and R_{10}, and the grid of the squelch tube will again be positive with respect to the cathode by the amount of the drop

across R_4. The resulting current in the plate circuit of T_1 will again cause a large enough drop across R_{16} to block the first audio stage.

q. The ON-OFF switch S is used to put the squelch system in and out of operation. In the OFF position it grounds the cathode circuit of the first audio below the cathode resistor, thus allowing operation of that stage. In that same operation it also grounds the plate of the squelch tube, putting it at a lower potential than the squelch cathode and thus completely throwing the squelch tube out of operation. This allows the reception of signals not strong enough to trip the squelch circuit.

r. An interesting refinement of this squelch system is the 2-megohm resistor R_{18} shunted by neon lamp L in the plate circuit of the first audio stage. When there is no signal being received, the squelch action biases the first audio to cut-off. There is no current in the first audio plate circuit, no voltage across R_{18}, and the neon lamp L does not light. When a signal does appear at the receiver antenna, tripping of the squelch circuit causes current flow in the plate circuit of the first audio, and produces a voltage drop across R_{18} sufficient to ionize the neon gas in lamp L and cause it to glow. This lamp is mounted on the front panel of the receiver and serves as an efficient call lamp to warn the operator that a message is being received.

135. Capabilities of Frequency-modulated Systems

a. Frequency-modulated transmitting apparatus, in general, is relatively simple, and very little power is required to accomplish modulation. F-m receiving equipment, on the other hand, is a good deal more complicated than amplitude-modulated systems. Receivers for frequency modulation are essentially superheterodynes, with special consideration given to the *limiter and discriminator stages* of the circuits.

b. There are two important *advantages* of frequency modulation over amplitude modulation.

(1) Noise can easily be reduced to a negligible value in most cases.

(2) In frequency-modulation transmission, because of the constant amplitude of the output signal, the power does not vary when the signal carrier is modulated. As a consequence, the tubes can be operated continuously at maximum output, and no reserve power need be retained to supply added power on modulation peaks, as is necessary in amplitude modulation. Also, for this same reason, the modulator does not have to supply much power, obviating the usual necessity for a high-power tube and power supply, as in amplitude modulation.

c. There are two important *disadvantages* of frequency modulation, in comparison with amplitude modulation.

(1) A disadvantage, from a tactical standpoint, is the fact that of two stations operating on closely adjacent frequencies, a receiving sta-

tion normally hears only the stronger transmitter, signals from the weaker station being entirely inaudible in the background noise of the stronger. This is due, in part, to the wide frequency band now found necessary for a single channel, or carrier. Since noise impulses have some small effect on the frequency of the carrier, the deviation used must be large in comparison with any frequency change caused by noise impulses. Under these conditions, any such change due to noise will be negligible as compared to the desired signal.

(2) Because of this, the use of frequency modulation is confined to high frequencies, where such required frequency-band space is available. This in itself is another disadvantage, since radio waves behave somewhat like light waves at these high radio frequencies, and the service area of a transmitter is confined approximately to the "line of sight" range of its antenna to the horizon. By way of compensation, however, static is generally lower at these high frequencies, than it is at the lower communication frequencies.

d. A comparison between frequency modulation and amplitude modulation is given in table VII.

136. Facsimile

a. Facsimile involves the transmission and reception of any intelligence which can be recorded on paper, such as drawings, photographs, newsprint, sketches, and maps. Facsimile differs from television in that the former transmits only *still* subjects, such as pictures and printed pages, whereas the latter deals with living scenes. The problems of facsimile are much simpler than those of television. The principal problem of any facsimile scheme is that of obtaining a transmitting *medium* capable of high fidelity reproduction of a-f currents. Just such a medium is provided by a frequency-modulation radio system.

b. The facsimile transmitter employs a light and lens arrangement so designed as to illuminate a small spot (about 1/100 inch in diameter) of the copy being transmitted. Reflected light from the surface of the paper carrying the copy is focused on a photoelectric cell, which responds with a current which is in proportion to the light. The magnitude of this current controls the amplitude of an audio oscillator, which in turn modulates a radio transmitter. A mechanical arrangement shifts the light spot across the paper from side to side, the intensity of the reflected light varying with the degree of blackness of the copy and modulating the transmitter accordingly. At the end of each line of the paper scanned, the spot is shifted down by one diameter, and a new line is scanned until the complete copy has been exposed.

c. The facsimile receiving system contains a rectifier which operates from the output of an ordinary receiver. The output of the rectifier

TABLE VII. *Comparison of frequency and amplitude modulation*

	Amplitude Modulation	Frequency Modulation
Signal level from transmitter.	Varies with modulation level.	Remains constant during modulation.
Amplitude of modulating voltage.	The modulating voltage determines the instantaneous change in signal level. The stronger the audio signal, the greater the instantaneous change in carrier level.	The modulating voltage determines the instantaneous deviation in frequency from the resting carrier frequency. The stronger the audio signal, the greater the frequency deviation.
Modulating-voltage frequency.	The modulating-voltage frequency determines the rate of change of the amplitude of the r-f wave.	The modulating-voltage frequency determines the rate at which the carrier frequency changes between its high and low values.
Side bands transmitted.	The width of the transmitted side bands is determined by the frequency of the modulating voltage. Present general limit is plus and minus 5 kc each side of the carrier.	The width of the transmitted side bands is determined by the amplitude of the modulating voltage. Present limits in the Army are 40 kc, plus and minus the resting frequency. In addition, there is a 20-kc guard band provided for separation of adjacent channels.
Modulating power.	Modulator power for plate amplitude modulation is one-half the plate-power input to the modulated stage.	Modulator power for frequency modulation is negligible —enough to supply the plate loss in the modulator tube.
Carrier power.	The final amplifier must be capable of supplying four times the rated carrier power on 100 percent modulation peaks.	The final amplifier must be able to supply the rated carrier power only.
Frequency limitation.	Amplitude modulation will work on practically any radio frequency.	Frequency modulation is normally employed at frequencies above 20 mc, although narrow-band frequency modulation is practicable at frequencies as low as 2 mc.

presents a varying d-c potential, one side of which is applied to a steel stylus 1/100 inch in diameter. The other side of this potential is applied to a metal drum, which is wrapped in a specially treated recording paper. The stylus makes contact with the paper, and the passage of current through the paper causes a chemical coating to be removed, thereby exposing a black spot, the density of which is related to the magnitude of the current flowing. By the use of a small motor rotating at a predetermined speed (the speed being fixed in accordance with the transmitter scanning rate), the recording stylus is moved across the paper exactly in step with the scanning light of the transmitter.

d. Each time the scanning device shifts the light spot to the next line, an extremely short low-tone impulse is put out by the transmitter. In the receiver, as the end of a line is reached, the stylus is shifted to the next line and held there by a stop, and the output of the rectifier is transferred from the stylus to an electromagnet. The next impulse actuates the electromagnet, which releases the stop and permits the recording to continue on the new line in synchronization with the transmitted subject.

SECTION XIV

ANTENNAS, RADIATION, AND WAVE PROPAGATION

137. Antenna Radiation

a. After an r-f signal has been generated in the transmitter there must be a means of radiating the r-f energy into space, and a means by which this signal can be intercepted (picked up) by the receiver. The device which fulfills both requirements is called the *antenna.* Thus, radiation of the transmitter signal energy is sent out into space by a *transmitting antenna.* This energy, in the form of an electric field, in traveling through space, cuts across a *receiving antenna,* thus inducing voltages in it. If the receiver is tuned to the same frequency as the transmitter, the signal will be received, amplified, and made audible. The receiving antenna does not require extreme care in design for satisfactory operation. The transmitting antenna system, however, is critical in many constructional details.

b. The proper design of the antenna system is of the utmost importance in a transmitting station, for the antenna must be able to radiate efficiently so that power supplied by the transmitter is not wasted. The transmitting antenna must be very exact in its dimensions and must be properly constructed; otherwise, poor efficiency will result.

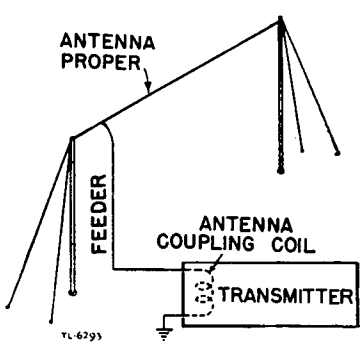

Figure 216. Typical transmitting antenna system.

c. A complete transmitting antenna system consists of three distinct parts, as shown in figure 216: the *coupling device,* for coupling the output of the transmitter to the feeder; the *feeder,* or *transmission*

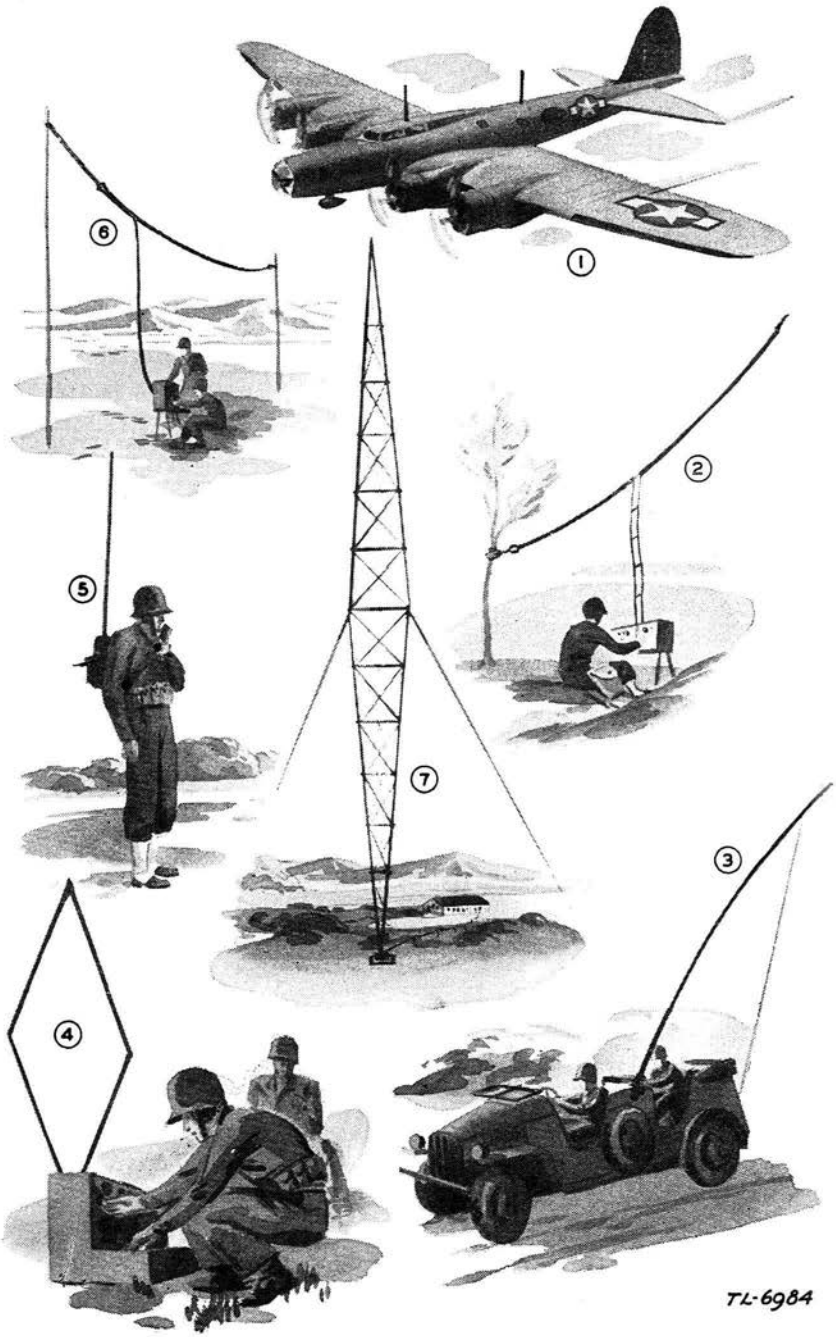

Figure 217. Types of transmitting antennas.

line, which carries the energy to the antenna; and the *antenna* proper, which radiates the signal energy.

d. There are many shapes and sizes of antennas used for radio transmission, and several different electrical types of antennas. Some of the factors which determine the type, size, and shape of the transmitting antenna to be used are:

(1) The frequency of operation of the transmitter.

(2) The amount of power to be radiated.

(3) The general direction of the distant receiving set.

e. A number of kinds of transmitting antennas are shown in figure 217. Two end-fed *vertical radiators* are mounted atop the fuselage of a heavy bomber in ①, and a *loop antenna* is contained inside the bulletlike shield under the nose of the fuselage. A half-wave, center-fed *Hertz antenna,* shown in ②, uses a tuned resonant transmission line to feed the energy from the transmitter to the antenna. The *whip antenna* of ③ is an end-fed, vertical, modified *Marconi antenna.* The *loop antenna* of ④ radiates a strong electromagnetic signal in certain directions and almost no signal in others. Another Marconi antenna is shown in ⑤, attached directly to a portable field radiotelephone set. A half-wave *Hertz antenna,* fed by a nonresonant (untuned) feeder line from the transmitter, is shown in ⑥. And finally, ⑦ shows a *fixed-station radiator,* which may extend upward hundreds of feet. All of these various types and sizes of antennas, together with the methods of coupling and feeding energy from the transmitter tank circuit to the antenna, will be discussed in the following paragraphs.

138. Principles of Radiation

a. Alternating current passing through a conductor creates two types of electromagnetic fields about the conductor. One is the familiar induction or magnetic field, which gives rise to transformer action and to choke-coil effects. The induction field greatly diminishes in strength a short distance from the conductor, so that its effects are purely local. The second type of electromagnetic field accompanying an alternating current is a *radiation field.* In the induction field, energy is alternately stored and then returned to the conductor, whereas in the radiation field, none of the energy is returned. As the frequency is raised, more and more of the total energy does not return to the conductor, but instead is radiated off into space in the form of electromagnetic waves, called *radio waves.* Efficient radiation is achieved by the use of high frequencies, that is, radio frequencies of 50 kilocycles and above.

b. Various factors in the antenna circuit, however, affect the radiation of these radio waves. If an alternating current is applied at one end of a length of wire (antenna), the wave will travel along the wire

until it reaches the other end. Since the end is free, there exsists an equivalent of an open circuit (point of high impedance) and the wave cannot continue farther. The wave bounces back or is reflected from this point of high impedance, and travels back toward the starting point where reflection again takes place. The energy value of this to-and-fro motion, or oscillation, is gradually dissipated by the resistance of the wire. If, however, each time it reaches the starting point, the wave is reinforced by an amount sufficient to replace the energy lost because of the resistance, a continuous oscillation of constant energy will be maintained along the wire. If the alternating voltage applied at the end of the wire is an r-f voltage, electrical impulses will be applied to the antenna at a rate equal to the frequency of the r-f voltage. Since these impulses must be properly timed in order to sustain oscillation in the antenna, and since the rate at which the waves travel along a wire is constant at approximately 300,000,000 meters per second, the length of the antenna must be such that a wave will travel from one end to the other and back again during the period of one cycle of the r-f voltage. The distance a wave travels during the period of one cycle is known as the wavelength, and it is found by dividing the rate of travel by the frequency. If the wave is to travel exactly the length of the wire and back again during the period of one cycle, it is evident that the wire must be equal in length to one-half the wavelength of the voltage being applied. Under this condition, the wire is said to be resonant to the frequency of the applied voltage. If r-f power is now applied to one end of the length of wire, at point *A* in figure 218, electrons will move along the wire away from point *A* toward the end *B* during the negative alternation of the applied voltage,

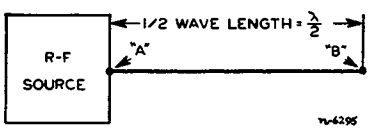

Figure 218. Half-wave antenna and r-f source.

and there will be a stoppage and crowding of electrons at point *B*, representing a high voltage at this point. On the next (positive) alternation of the applied voltage, the electrons will move toward point *A*, and there will be a stoppage and crowding of electrons at this end when the electrons traveling toward *A* meet the next impulse from the voltage source. This results in a *high voltage* at this point. In the center of the antenna there is at all times a maximum movement of electrons causing a high current, and therefore a low impedance. (Charges in motion constitute a current.) Very little voltage will appear, therefore, at the center of the antenna, and no current will flow at the ends. This condition, shown graphically in figure 219, is

called a *standing wave.* The points of high current and high voltage are known as current and voltage *loops,* respectively. The points of minimum current and minimum voltage are known as current and voltage *nodes,* respectively. The presence of standing waves describes the

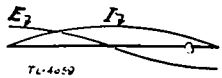

Figure 219. Distribution of voltage (E) and current (I) on fundamental half-wave antenna.

condition of resonance in a transmitting antenna. Since the waves traveling back and forth in the antenna reinforce each other, a maximum radiation of electromagnetic waves into space results. When there is no resonance, the waves tend to cancel each other, thus dissipating their energies in the form of heat loss, rather than utilizing them to radiate the radio waves.

c. A wire in space (a radio antenna) will resonate at more than one frequency. The *lowest* frequency at which it resonates is called its *fundamental* frequency, and at that frequency the wire is approximately half a wavelength long. A wire or antenna can have two, three, four, or more standing waves on it, and thus will resonate at approximately the integral harmonics of its fundamental frequency.

d. Most practical transmitting antennas come under one of two classifications, *Hertz antennas* or *Marconi antennas.* A Hertz antenna is operated some distance above the ground, and may be either vertical or horizontal. A Marconi antenna operates with one end grounded (usually through the output of the transmitter or the coupling coil at the end of the feed line). Hertz antennas are generally used at higher frequencies, above about 2 megacycles, while Marconi antennas are used at lower frequencies. Marconi antennas may also be used at high frequencies in certain applications, such as airplane antennas where the airplane itself becomes the effective ground.

139. Hertz Antenna

a. The operation of the Hertz antenna is based on the fact that the wavelength to which any wire will tune depends directly upon its length. The radiator is thus self-tuned and no ground or counterpoise is necessary. Consequently, the Hertz antenna can be placed where it is less disturbed by the effects of grounded objects, such as buildings, and so forth, and is therefore more efficient. The basic antenna discussed in paragraph 138 is a Hertz antenna.

b. The standing-wave resonance distribution of the current in a Hertz antenna at the fundamental frequency is shown in figure 220①. From the standing wave of the current it will be seen that a maximum current *loop* occurs at the center of the antenna, and that there is

minimum current at the ends of the antenna. The wavelength of the corresponding wave is twice the length of the antenna.

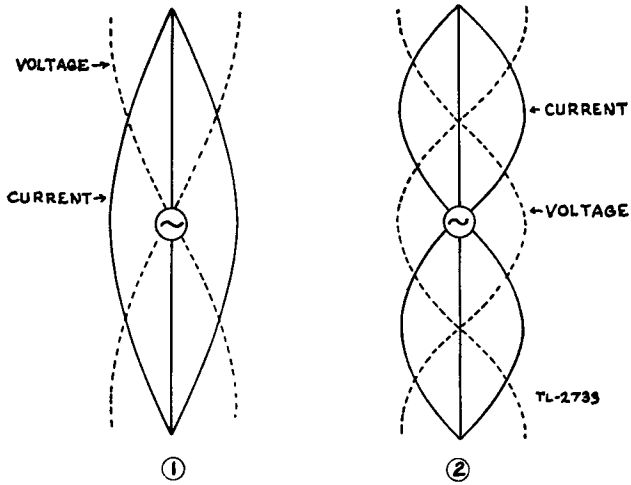

① *Fundamental frequency.*
② *Second harmonic frequency.*

Figure 220. Standing waves of current in half-wave Hertz antenna. (Voltage distribution shown by dotted lines.)

c. When the same length Hertz antenna is excited at twice the fundamental frequency (the second harmonic), the resulting current distribution waves will be as shown in figure 220②. The wavelength of the corresponding (second harmonic) radiation will be equal to the length of the antenna.

d. If the antenna is twice as long (or a full wavelength for the Hertz antenna) the same condition of resonance exists, since the standing wave comes into existence when the reflecting wave is returned in step with the oncoming wave. Thus, any multiple of the half-wavelength ($\frac{1}{2}\lambda$, 1λ, $1\frac{1}{2}\lambda$, 2λ, etc.) will produce resonance conditions in the Hertz type of antenna.

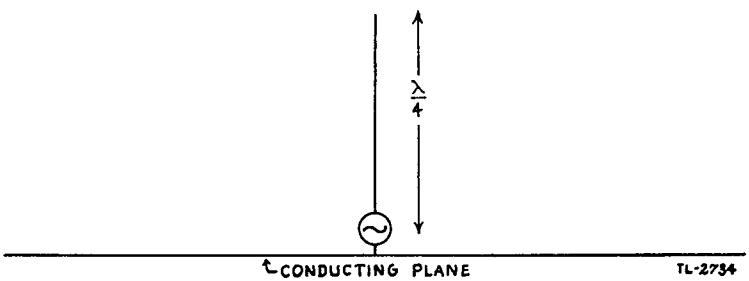

Figure 221. Lower half of Hertz antenna replaced by extensive conducting plane.

140. Marconi Antenna

a. If the lower half of the Hertz antenna is replaced by an extensive conducting plane (fig. 221), no disturbance is caused in the propagated waves from the upper half. In other words, the remaining quarter-wave will continue to radiate much in the same way as a half-wave antenna, provided a large and extensive conducting plane is present. A practical form of such a radiating system is the Marconi antenna, in which the lower terminal of the generator is connected to ground, and the earth's surface serves as the required extended conducting plane. Current and voltage distributions in such an antenna at the

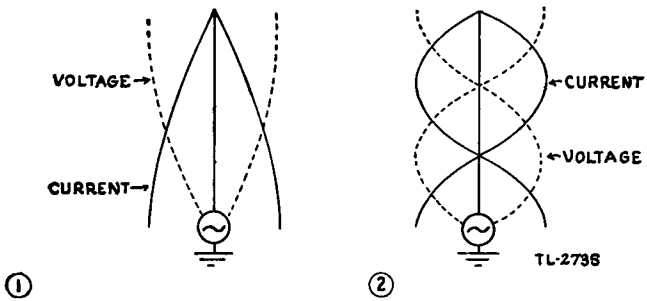

① *Fundamental frequency.*
② *Third harmonic.*

Figure 222. Standing waves of current in quarter-wave Marconi antenna. Voltage distribution is shown by dotted lines.

fundamental frequency are shown in figure 222①. The wavelength of the radiation at the fundamental frequency is four times the length of the antenna, since the antenna is only a quarter-wave in length itself.

b. In the grounded Marconi antenna the voltage is necessarily a minimum, and the current a maximum at the base. For this reason, the antenna can resonate only when excited at odd harmonic frequencies (third harmonic, fifth harmonic, etc.). The current and voltage distributions in a Marconi antenna, excited at the third harmonic frequency, are as shown in figure 222②.

c. Another conception of the operation of the Marconi antenna is illustrated in figure 223. Although a Marconi antenna has a physical length of one-quarter wavelength, it can be considered as functioning as a one-half wavelength antenna. The reason for this peculiarity is due to the fact that the antenna proper provides one-quarter wavelength, and the earth supplies the additional one-quarter wavelength. The total effective (or electrical) length then is one-half wavelength. This is shown in figure 223, where the lower half of the antenna has been replaced by the image of the upper half in the ground.

d. The Marconi antenna uses a ground connection to make up half its electrical length. It will be remembered that a resistance in a

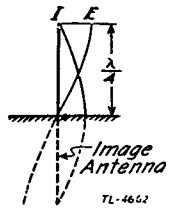

Figure 223. Current and voltage distribution in Marconi antenna.

tuned circuit decreases the magnitude of current and broadens the selectivity of the circuit. In a like manner a high resistance in an antenna will decrease its efficiency. For this reason a low-resistance ground connection must be used. This is not always easy to accomplish, since the earth in many localities is dry and sandy. When this is the case, a counterpoise is used. A counterpoise is simply a wire, a system of wires, or a mass of metal, which is used as a substitute for ground. This wire should be stretched underneath the antenna, about a foot above the ground and insulated from it, when a horizontal antenna is used. With a vertical type antenna, a spokelike arrangement of wires is used, extending outward from the antenna. This arrangement should also be about one foot above the ground and insulated from it. A vertical type Marconi antenna installed in a vehicle usually uses the vehicle chassis as the counterpoise.

e. The Marconi antenna types are commonly used in Army radio equipment. The main advantage of the Marconi antenna lies in the fact that, for any given frequency, it is so much shorter than the Hertz antenna. This is of particular importance in all field and vehicular radio installations.

141. Frequency and Antenna Length

a. It is now the universal practice to designate radio waves in terms of frequency, which is expressed in so many cycles, kilocycles, or megacycles. Formerly, radio waves were designated in terms of wavelength, the unit being the meter. Wavelength figures are convenient in discussions of antenna systems because the wavelength gives some indication of the actual physical dimensions of the wires. For example, a half-wave antenna for 50-meter transmission is 25 meters (about 27 yards) long.

b. The important relationship between wavelength and frequency must be kept in mind. Since the velocity of radio waves through space is constant at the speed of light, the more waves that pass a point per second, the closer together the peaks of those waves must be. Therefore, the higher the frequency, the shorter the wavelength. Frequency describes the *number* of wave cycles, or peaks, passing a given point per

second. Wavelength describes the *distance* the wave travels through space during one cycle, or oscillation, of the antenna current; it is the distance (in meters) between adjacent peaks of the series of oscillations. This inverse relationship between frequency and wavelength is expressed by the formulas:

$$\text{Frequency (in cycles per second)} = \frac{300{,}000{,}000}{\text{Wavelength (in meters)}}$$

or

$$\text{Wavelength (in meters)} = \frac{300{,}000{,}000}{\text{Frequency (in cycles per second)}}$$

142. Antenna Impedance

a. A transmitting antenna has a definite impedance to electron flow at every point along its length. This impedance varies according to the relative amount of crowding of electrons as the ends are approached. The impedance existing at any point is equal to the voltage existing at that point, divided by the current at that point. Thus, the lowest impedance occurs where the current is highest—at the center of a half-wave Hertz antenna, or a quarter-wave from the end of a Marconi antenna. The highest impedance occurs where the current is lowest.

b. A graphic picture of the impedance relationship along a half-wave Hertz antenna is shown in figure 224. The impedance at the center of this Hertz antenna is about 73 ohms. The impedance of a Marconi antenna is considerably lower. The impedance rises uniformly toward each end of the antenna, where it is about 2,400 ohms for a Hertz antenna, and about twice as high for a vertical Marconi antenna.

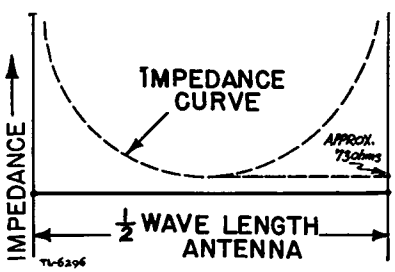

Figure 224. Impedance curve for half-wave Hertz antenna.

143. Loading

a. It is often desired to use one antenna system for the transmission of signals of various frequencies. Since the antenna must always be in resonance with the transmitted frequency, the antenna proper may be lengthened or shortened for this purpose. But, except for *trailing-wire antennas* used in aircraft installations, this plan is not very practical.

b. The same result may be accomplished more conveniently by inserting a variable inductor or capacitance in series with the antenna. This is known as lumped-impedance tuning, or *loading.* The electrical length of any antenna wire can be increased or decreased by means of loading. If the antenna is too short for the wavelength being used, it is resonant at a higher frequency than that at which it is being excited. Therefore, it offers a capacitive reactance at the excitation frequency. This capacitive reactance can be counterbalanced by introducing a lumped

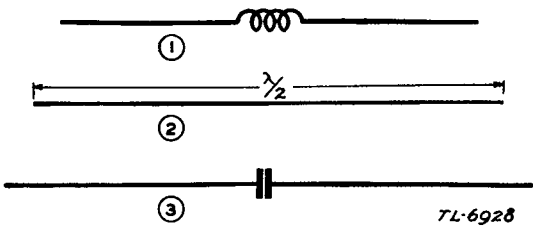

① *Loading to compensate for too short an antenna.*
② *Normal antenna, without loading.*
③ *Loading to compensate for too long an antenna.*
Figure 225. Three antennas, all equal electrically to a half-wavelength.

inductive reactance, as shown in figure 225①. Similarly, if the antenna is too long, it offers an inductive reactance, which can be corrected by introducing a lumped capacitive reactance, as shown in figure 225③. Thus, the antenna in figure 225① is inductively lengthened, while the antenna in figure 225③ is capacitively shortened.

144. Resonant Feeders

a. If an antenna is to radiate properly, there must be some means of transferring the energy from the output of the transmitter to the antenna. This transfer of energy is accomplished by feeders or transmission lines in conjunction with coupling circuits. There are two general types of feeders, the resonant (tuned) feeders and the nonresonant (untuned) feeders. Tuned, or resonant, feeders are the easiest to construct and to adjust for proper transfer of the signal to the antenna.

b. The half-wave, single-wire voltage feeder is the simplest type of tuned feeder. The electrical length of the wire (fig. 226) is a full wavelength of the applied r-f voltage. An electrical impulse is applied to the wire at point *P* from the tank circuit *T*. The wave will travel along the wire toward *E*. Since the length of the wire *PSE* is equal to one wavelength of applied voltage, the wave reaches the end *E* and is reflected just as the second wave leaves the tank circuit *T*. Both waves are traveling toward point *S*. Having equal distances to travel they

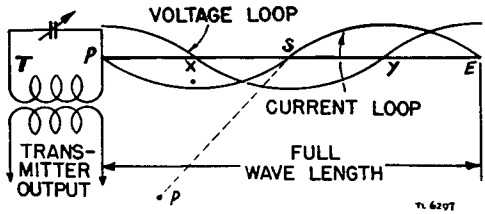

Figure 226. Current and voltage loops on full-wave antenna.

will meet at point S, thus causing a stoppage and crowding of the electrons at that point. The concentration of electrons built up at point S divides, part flowing toward the end E and part back toward P. As this last wave reaches point P, the third wave is given off by the tank T, and there is again a stoppage and crowding of electrons at that point. As a result there will be voltages built up at points P, S, and E. These points of high r-f voltage will be one-half wavelength apart. In this way, the wave will oscillate between points P and S and points S and E, with the losses due to resistance being made up by the energy supplied by the tank T. At points X and Y, there is a maximum movement of electrons and therefore a high current. If the wire in figure 226 is bent at point S, as indicated by the dotted line, and the section PS is connected to the transmitter tank circuit, as shown in figure 227, an

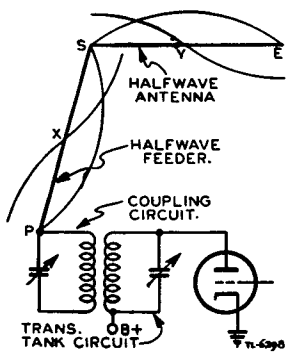

Figure 227. Half-wave, single-wire, voltage-fed antenna.

arrangement known as a *single-wire, voltage-fed antenna* is obtained. The term *voltage* is applied to this type of feed because the section PS, which is considered as the feeder, is connected to the antenna proper at a voltage loop S. Since a voltage loop exists at point P on the feeder, it must be connected to a point of high voltage on the antenna-coupling circuit. Because there are currents in both the feeder and the antenna proper, both will have radiation fields, and therefore the angle between each should be about 90°. The feeder PS should be approximately a half-wave length long. However, small errors in the length of the feeder

may be corrected by adjustment of the capacitor in the coupling circuit. Larger errors must be compensated for by adding inductance or capacitance in series with the feeder. The advantage of this type of feed is its simplicity. The disadvantage lies in the fact that the feeder radiates. Since the feeder will usually by installed near absorbing objects such as trees and shrubbery, this radiation represents a loss.

c. Another type of voltage feed is the *Zeppelin* (or *Zepp*) *feed system* (fig. 228). It will be noticed that the currents at X and Y in figure 226 are opposite in phase to each other. If the wire in figure 226 is bent at S so that both halves are parallel to each other, the fields set up by the currents in each will be opposite in phase and any radiation will

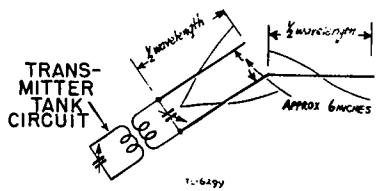

Figure 228. Half-wave antenna with Zeppelin feed.

be cancelled. Such an arrangement can be used to feed an antenna, as shown in figure 228. The voltage is applied at a point corresponding to point S of figure 226, instead of at point P. Since point S is a point of high impedance, a parallel-tuned coupling circuit is used to provide high r-f voltage. The advantage of the Zeppelin feed is the reduction of radiation from the feeders with a consequent lowering of losses.

d. A *current-fed antenna* is shown in figure 229. Sections ES and SP are each a quarter-wavelength long. Together they form a half-wavelength of wire. When voltage is applied at point P, voltage and current

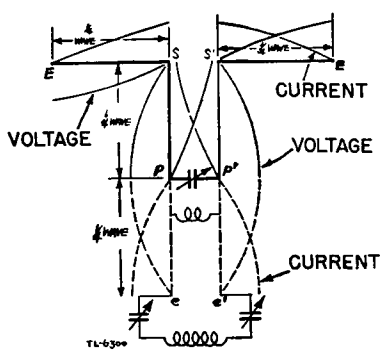

Figure 229. Current-fed antenna.

loops will exist as shown in figure 229. Section $P'S'$ and $S'E'$ are also a quarter-wavelength long. Together they also form a half-wavelength of wire. When voltage is applied at P', voltage and current loops will exist

as shown. Compare the voltage and current distribution of each half-wave section with that shown on the half-wave section of figure 219. Since the SP and $S'P'$ sections run parallel to each other and the currents in each are opposite in direction, the fields created by these currents will oppose each other. This results in a cancellation of radiation from these sections, which act as feeders for the antenna sections ES and $E'S'$. This type of feed is known as *current feed* because the feeders connect to the antenna at points of *high current*, S and S'. Since voltage loops exist at points P and P', a parallel-tuned coupling circuit is used to apply voltage to these points. The length of the feeders may be extended to any multiple of the quarter-wavelength. However, on the even multiples, as shown by the broken lines, a series-tuned coupling circuit should be used, because a high current exists at the ends e and e' of the feeders and only a series-tuned circuit can efficiently supply this current.

145. Nonresonant Feeders

a. Nonresonant feeders are also known as *transmission lines*, and their chief characteristic is that they are untuned. A nonresonant, or untuned, line is a feeder with negligible standing waves. Voltage and current are smoothly distributed throughout its length, though both taper off slightly towards the antenna end of the line as a result of losses in the feeder system. Physically, the line itself should be identical throughout its length. The termination at the antenna end is the only critical characteristic of the untuned feeder line. For proper operation of a nonresonant feeder (with standing waves eliminated), some form of impedance-matching arrangement must be used between the nonresonant line and the antenna proper, so that the radiation resistance (or impedance) of the antenna is reflected back into the feeder as an impedance equal to the line impedance. It is important that the antenna be cut to exact size for resonance; otherwise it will not present a pure resistive load to the nonresonant feeder line.

b. A *single-wire transmission line* is shown in figure 230. This untuned feeder depends on ground for its return circuit. The impedance to r-f energy of a single-wire transmission line is determined by the thickness of the wire and the distance above ground. A typical single-wire nonresonant line has an impedance of approximately 600 ohms. For maximum power transfer from the coupling unit T to the antenna (fig. 230), the feeder wire should be connected to the coupling circuit at some point such as A, and to the antenna at some point such as B, where the impedance of both points is equal to the impedance of the transmission line. Figure 224 shows that the impedance of an antenna varies from a maximum (at the ends) to a minimum of about 73 ohms (at the center). In figure 230, the point B is located approximately 14 percent of a half-wavelength off the center of a half-wave

antenna. A practical point for operation can be determined by multiplying the length of a half-wave antenna in feet by the constant 1.71. The resultant figure will be the distance in inches from the center *C*. As an example, assume that the length *SP* equals 100 feet; *CB* would then equal 100 x 1.71, or 171 inches. The exact location of points *A* and *B* are then found by experiment. The exact point is arrived at when the

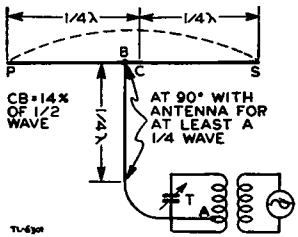

Figure 230. Half-wave Hertz antenna with single-wire transmission line.

standing waves on the feeder are minimum. The presence of standing waves can be detected by means of an absorption-type wavemeter brought close to the feeder. An absorption type wavemeter is simply a tuned circuit and an r-f meter, or a flashlight lamp, for indicating the presence of radio frequencies.

c. A *two-wire transmission line* has an impedance which depends on the thickness of the two wires and the distance between them. When using the two-wire transmission line type of feeder, connection is made to points on both the antenna and the coupling circuit where the

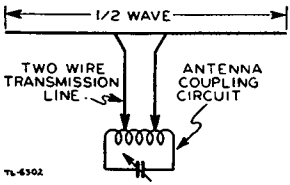

Figure 231. Half-wave Hertz antenna with two-wire transmission line.

impedance matches the impedance of the transmission line. Such an arrangement is shown in figure 231. When properly matched, no standing waves will exist along the feeders. The adjustment of this type of transmission line is extremely critical, and such an antenna system can be used only on a single frequency. This method of feed is sometimes called a two-wire, matched-impedance system.

d. The *coaxial cable* is another type of transmission line. It consists of two concentric conductors, one located inside the other and insulated from it (fig. 232). The r-f impedance of coaxial cables is low (usually about 75 ohms), and is determined by the diameters of the two con-

ductors and the distance between them. A Marconi antenna fed by means of a coaxial cable is shown in figure 233. This method is occasion-

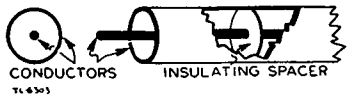

Figure 232. Construction of coaxial cable.

ally used where the antenna is separated from the transmitter, and any radiation from the feeders would be detrimental. The outer conductor of the coaxial cable is connected to the low side of the coupling circuit and grounded. The inner conductor connects the lower end *P* of the

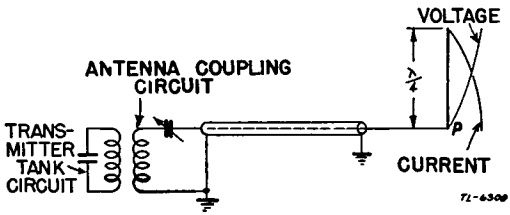

Figure 233. Marconi antenna fed by coaxial cable.

vertical antenna to the coupling circuit. The coupling circuit is series-tuned because a high current is necessary at point *P*.

e. A *twisted-pair transmission line* is a two-wire line composed of twisted rubber-covered wire constructed to have an impedance approximately equal to that at the center of the antenna itself. The method of connecting this untuned transmission line to the antenna is shown in figure 234. Any discrepancy which may exist between the line impedance and the antenna impedance may be compensated for by a slight fanning of the line where it connects to the two halves of the antenna (fig. 234). The twisted line is a convenient type to use, since it is easy to install and the r-f voltage on it is low, owing to the low impedance of the line. This makes insulation an easy matter. The antenna proper should be one-half wavelength long for the frequency of operation. The amount of fanning (dimension *B* of fig. 234) will depend upon the kind of cable used; the right value usually will be

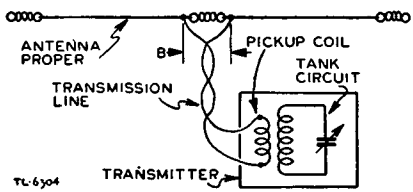

Figure 234. Half-wave Hertz antenna with twisted-pair transmission line.

found to be between 6 and 18 inches. It may be checked by inserting ammeters in each antenna leg at the junction of the transmission line and the antenna, and the value of B which gives the largest current, is correct. Or else, the system may be operated continuously for a time with fairly high r-f power input, after which the feeder may be inspected (by touch) for hot spots. These indicate an improper impedance match, and the fanning should be adjusted until they are eliminated or minimized. Each leg of the feeder forming the triangle at the antenna should be equal in length to dimension B.

146. Methods of Coupling

a. Coupling is used to connect the transmitter output to the feeder or transmission line. If there is no transmission line, coupling is used to connect the transmitter output directly to the antenna. Coupling serves to isolate the transmission line and the antenna from the large d-c potentials at the output of a transmitter. Coupling devices are also used to tune to resonance the circuits they connect. For this purpose they are generally provided with one or more variable elements, such as variable capacitors or variable inductors. Finally, coupling devices provide a means for varying the coupling between the circuits, and therefore can be used for impedance matching so that a maximum power transfer from the transmitter to the antenna is accomplished. There are several methods of coupling between the transmitter and the feeders, or transmission lines.

b. The simplest coupling method for a single-wire-fed or end-fed Hertz antenna is by means of *direct* coupling (fig. 235). In direct

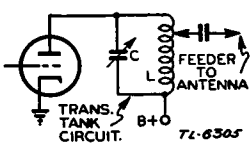

Figure 235. Direct-coupled antenna.

coupling the antenna system is attached directly to the plate tank coil. Because d-c voltage is present in the plate tank circuit, a small capacitor should be connected in series with the antenna feeder, as shown. This prevents the antenna from being at a high d-c voltage, which would endanger human life. The point at which the connection on the plate tank coil is made should be carefully considered. The plate tank coil has a zero r-f voltage point (node) either at the center or at one end, depending on the type of amplifier used. The point of zero r-f voltage occurs at the center of the coil in a push-pull amplifier as well as in a plate-neutralized amplifier. The voltage node occurs at the lower end of the coil, both in the case of a single-ended amplifier and a grid-neutralized,

single-ended amplifier. If the tap is too close to the voltage node, the antenna will not sufficiently load the amplifier. If the tap is too close to the plate end of the coil, excessive loading will result, accompanied by overheating of the tube and reduced efficiency. This type of coupling has an additional disadvantage in allowing harmonics which exist in the tank circuit to be radiated by the antenna.

c. A second system of coupling is *inductive coupling,* accomplished by the use of transformer action (fig. 236). In this system, a tuned circuit is inductively coupled to the plate tank circuit. It is advisable in this type of coupling to locate the antenna-coupling coil at a point of low r-f voltage, in order to prevent capacitive coupling between the tank circuit and the antenna coupling circuit. This system prevents

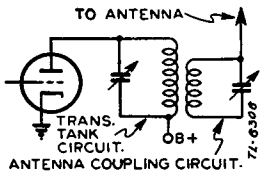

Figure 236. Inductively coupled antenna.

the antenna from being at a high d-c voltage. At the same time, it is more selective and reduces the amount of harmonic radiation from the antenna, since the antenna-coupling circuit is tuned. Another method of inductive coupling is shown in figure 237, where a current-fed vertical Marconi antenna, as used in the BC–191 transmitter, is coupled to the

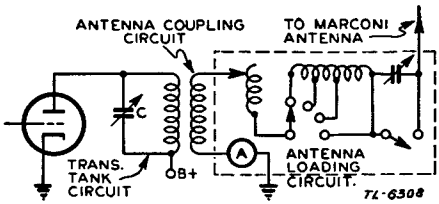

Figure 237. Inductively coupled Marconi antenna with loading circuit.

transmitter tank circuit. Coupling to the antenna is at the point nearest ground, where there is a high current. Therefore, this type of feed is known as *current feed.* The adjustable inductance and capacitance within the dotted-line block are for the purpose of loading; this allows for adjustment of the electrical length of the antenna to the proper wavelength or frequency being transmitted. Inductive coupling is the most widely used method of coupling, and is employed in a number of Army radio sets.

d. A third system, similar to inductive coupling, is known as *link coupling.* This method of coupling is employed in high-power trans-

mitters where the antenna tuning unit is remote from the transmitter. A typical circuit is shown in figure 238. The link between the transmitter and the antenna unit consists of a few turns of wire in or around

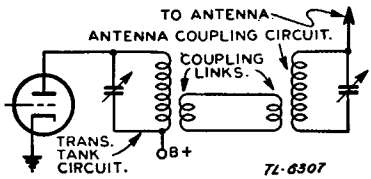

Figure 238. Link-coupled antenna.

the plate tank and the antenna-coupling coil. Approximately two or three turns of wire are required on the link. The exact number is best determined experimentally. The links in this inductive-coupling method are placed at the low r-f voltage side of the coil, in order to prevent capacitive coupling and its harmful effects.

147. Antenna Tuning Systems

Four typical antenna tuning units are shown in figure 239. In ① the transmitter feeds the antenna system at a point of high voltage, and can be made to match a transmitter output into a very short antenna. In ② the transmitter feeds the antenna system at a point of high current, and will provide the proper antenna loading for a long antenna. The arrangements of ③ and ④ provide antenna loading for use with a short antenna, such as the short mast antenna of the buggy-whip variety mounted on vehicles.

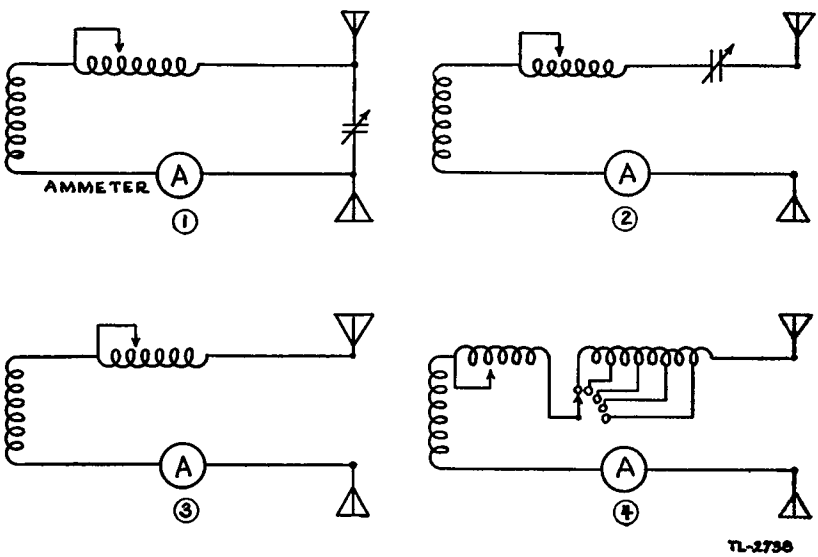

Figure 239. Antenna tuning units.

148. Directive Properties of Antennas

a. No antenna radiates energy equally well in all directions. There are several reasons for this: first, there is no radiation end-on to a straight wire; second, the waves reflected back from the ground produce interfering fields which may help or hinder the normal direct radiation; third, if there is more than one current loop in the radiator, the total radiation may be regarded as the resultant of a number of components, one from each standing-wave current loop. Finally, in any given direction these various components may have to travel different distances and, therefore, may not arrive at the receiver in the same relative phase that they had in the radiating wire. They can, therefore, augment or cancel each other according to the direction. For these reasons antennas are said to be *directive.*

b. Directive antenna systems can be constructed in two ways: first, by combining a number of half-wave antennas, and second, by taking advantage of the known directive properties of long wires and building up combinations of these. In either case the component parts are fed in such a way that the signals add in the favored direction and tend to cancel in other directions. The signal intensity in the desired direction, and the sharpness of the resulting *beam of radiation,* increase with the size and complexity of the system. A number of half-wave resonant elements, combined in such a way that the components of radiation from each of the elements add in the favored direction and interfere in most other directions, is known as a *beam-array antenna system.*

149. Propagation of Radio Waves

a. As shown in figures 219 and 226, the current along an antenna is not uniform, but is maximum at the center and minimum at the ends of each half-wavelength of wire. This current sets up disturbances in the space surrounding the antenna. Such disturbances, or radio waves, are propagated with the speed of light, and can be refracted or reflected much the same as light waves. Since the current is greatest at the center of the half-wavelength antenna, maximum radiation takes place from this point and practically no radiation occurs at the ends. If a half-wave antenna were located in space, *entirely free from the influence of the earth,* this radiation would be maximum at right angles to the antenna, and would completely encircle it. If it were possible to see this perfect radiation pattern, it would resemble a doughnut in shape with the antenna wire passing through the center. If it were possible to cut this doughnut in half, the pattern would appear as indicated in figure 240. Notice that maximum radiation takes place in a line perpendicular to the center of the antenna, and that as the angle decreases from 90°, the radiation also decreases. Such a perfect radiation pattern is only of use in illustrating the origin of radio waves; it would never

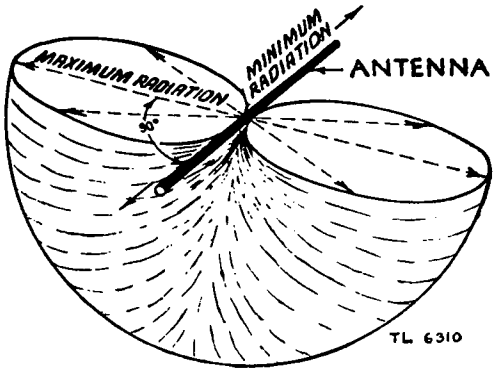

Figure 240. Perfect radiation pattern of half-wave antenna.

be found in practice, because radio antennas are operated relatively close to the earth. The actual radiation pattern of the half-wave antenna is of an entirely different character, since it is distorted by the reflecting effects of the earth and the sky. These effects will vary considerably, depending upon the height of the antenna above ground, solar conditions, and other factors.

b. A simple transmitting antenna radiates r-f waves in nearly all directions, though the strength of the waves may be greater in certain directions and at certain angles above the ground. Part of the radiated energy travels along the surface of the earth and is called the *ground wave.* In traveling over the surface of the earth, this ground wave is rapidly attenuated or diminished, and for consistent communication is reliable only up to a range of 10 to 35 miles. The remaining portion of the radiated energy from the antenna is sent up at an angle above the horizon, and is called the *sky wave.* This energy is partly returned

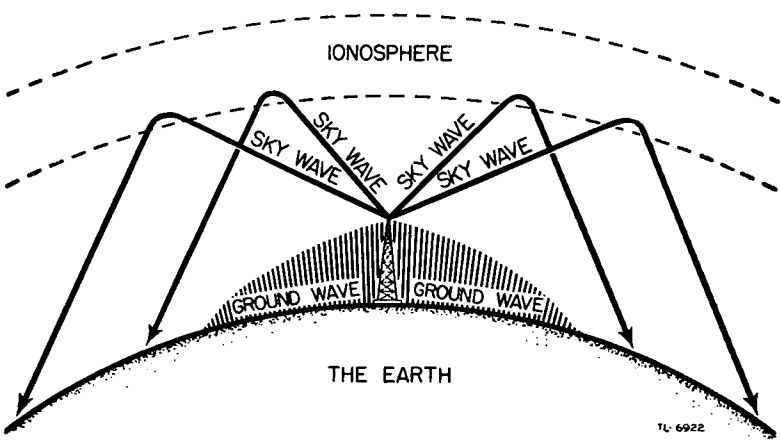

Figure 241. Ground wave and reflection of sky waves from the ionosphere.

to earth by the *reflecting* effect produced by layers of free electrons that exist 70 to 250 miles above the earth's surface. These ionized layers, known as the *ionosphere,* can reflect or refract some of the sky waves back toward the earth, and so produce a radio signal at points distant from the transmitting antenna. Figure 241 illustrates the ground wave and the action of sky waves emanating from a transmitting antenna.

c. The amount of bending of the sky wave by the ionosphere will depend upon the frequency of the wave and the amount of ionization in the ionosphere, which in turn is dependent upon radiation from the sun. The sun increases the density of the ionosphere layers and lowers their effective height. Other solar and magnetic disturbances also produce changes in these layers. For these reasons radio waves act differently at different times of the day, at different seasons of the year, and over different places on the earth's surface. The higher the

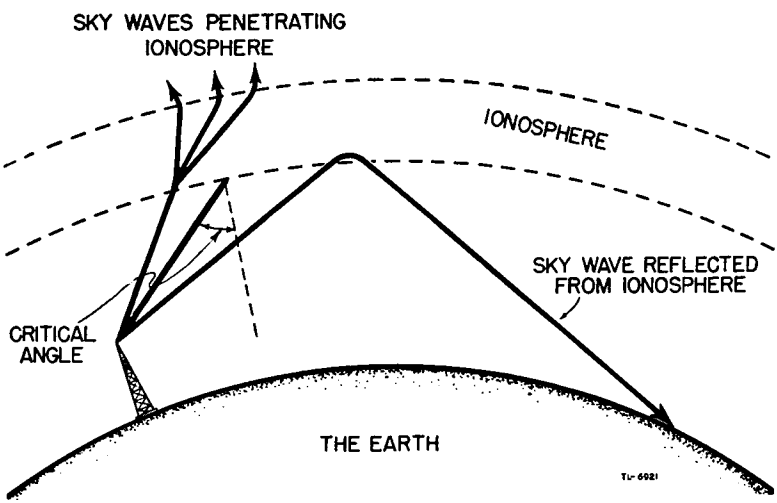

Figure 242. Critical angle of sky wave propagation.

frequency of a radio wave, the farther it penetrates the ionosphere, and the less it tends to be bent back toward the earth. At low radio frequencies the sky waves are bent more easily, and fewer penetrate the ionosphere.

d. As the direction of a radio wave from the earth approaches the vertical, a *critical direction* is reached. If the direction of the wave is more vertical, it penetrates the ionosphere. The angle between this critical direction and the vertical, through the point where the wave meets the ionosphere, is called the *critical angle* (fig. 242). Sky waves that strike the ionosphere at angles less than the critical angle penetrate the layer of ionization and never return to earth. Sky waves that

strike the ionosphere at angles greater than the critical angle are reflected back to earth (fig. 242).

e. Sky waves that strike the ionosphere at the critical angle are returned to earth at a distance from the transmitter known as the skip distance (fig. 243). The sky waves will not return to earth at points

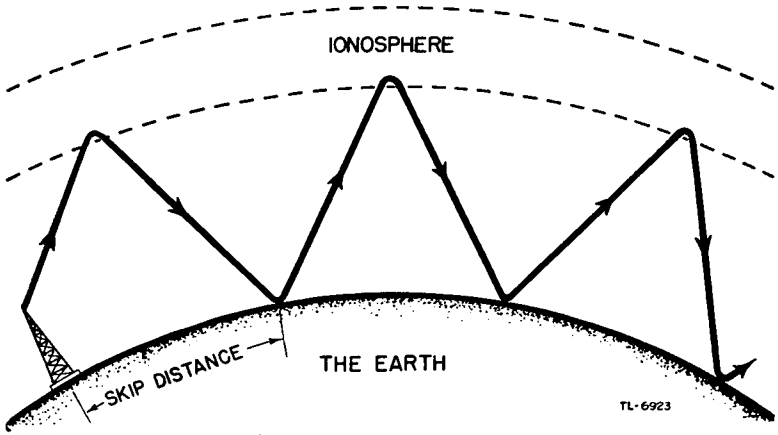

Figure 243. Skip distance.

closer than this distance. Skip distances of several hundred miles are quite common at the higher frequencies. The portion of the sky wave that is reflected back to earth does not come straight down, but is reflected at an angle that corresponds to the angle at which that particular wave strikes the ionosphere (fig. 243). The sky wave, after being reflected from the ionosphere, strikes the earth, and may be reflected back from the earth, and may again be reflected from the ionosphere. This process continues until the radio wave is completely absorbed.

f. The greater the frequency of the sky wave, the greater the critical angle and the greater the skip distance. When the sun is directly overhead, the density of the ionosphere is greatest. This condition decreases the skip distance. For this reason, also, the skip distance is less in daytime than at night. Seasonal changes in the ionosphere position and changes resulting from sunspot activity also are factors in determining the skip distance.

g. Part of the energy of the sky wave is absorbed by the ionosphere. Absorption in the daytime is greater for lower frequencies. Therefore, the higher the frequency the stronger the signal. However, there is an upper limit to the frequency which can be used, since the skip distance also increases with frequency.

h. It is possible that there may be a gap between the most distant point reached by the ground wave and the point where the sky wave is first reflected back to earth. Such a condition is shown in figure 244. This gap is known as the *skip zone,* and is responsible for the condition

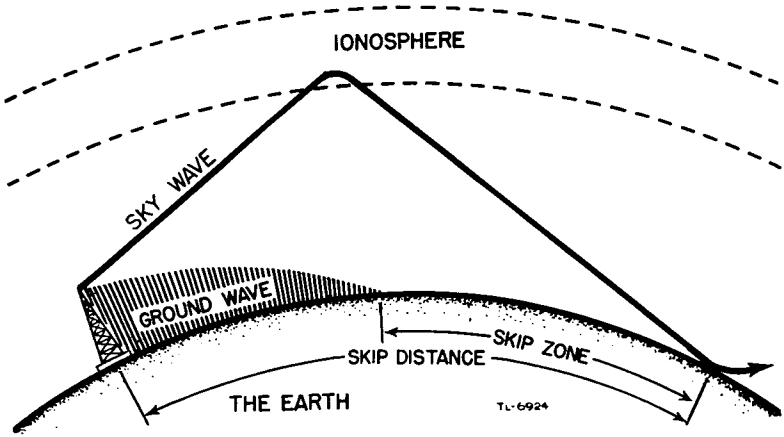

Figure 244. Skip zone, in which no signals can be received.

that exists when a signal is received at a great distance from the transmitting antenna while an operator whose receiver may be nearer the transmitter cannot hear the signal. Care must be taken not to use a transmitting frequency which will locate the receiving station in the skip zone.

i. A r-f wave leaving an antenna will have a definite polarization. The direction of the electric component of the radiated wave is in the same plane in which the wire lies, and in radio work it is usual to say that the wave is *polarized* in this plane. Thus, the radiation from a vertical antenna is said to be vertically polarized, while the broadside radiation of a horizontal antenna is said to be horizontally polarized.

j. When an antenna is in the vertical position, there will be an equal amount of radiation in a horizontal plane (parallel with the earth's surface) in all directions from the antenna. But when the antenna is set horizontally, the greatest radiation will be upward. The radiation along the ground will be greatest broadside to the antenna.

150. Fading

a. The random rising and falling of the intensity of a received radio signal, known as *fading,* can be attributed to the interaction of different components of the same radiation which, by virtue of having traveled different paths from the transmitter, arrive at the receiver with varying phase relations, thus tending to either cancel or reinforce each other. Since the condition of the ionosphere is continually changing, the several components of the received wave may reinforce each other, to cause a very strong signal at one instant, while at a later instant their phase relations may be such that the combined effect produces a very weak signal.

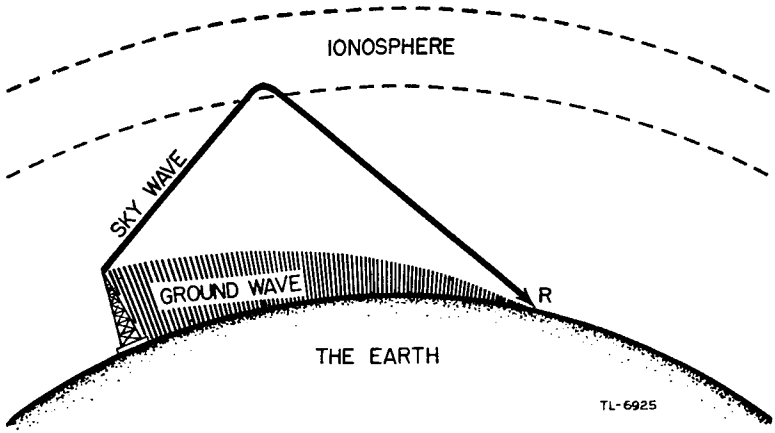

Figure 245. Fading caused by arrival of ground wave and sky wave at the same point (R) out of phase.

b. One common cause of fading due to the interaction of two parts of the same radio wave is shown in figure 245. At a certain distance *(R)* from the transmitter, both the ground wave and the sky wave may be received. Since these waves travel different paths, it is possible that they may arrive out of step (out of phase) with each other. When

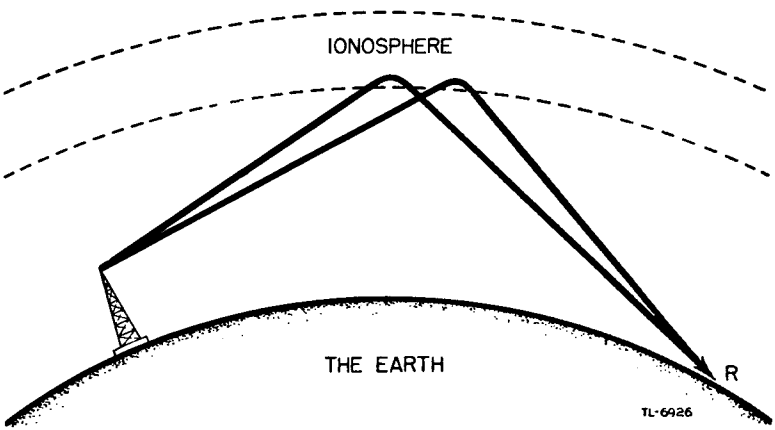

Figure 246. Fading caused by arrival of two sky waves at the same point (R) out of phase.

this happens, the two waves tend to neutralize (cancel) each other at point *R* (figure 245). Another common cause of fading is the interaction of the components of a single sky wave. In this case, the various components will reach the receiver *(R)* with varying phase differences, thereby resulting in a continuously varying signal (fig. 246). Violent changes in the ionosphere, known as an *ionosphere storm,* may also cause severe fading, especially of frequencies higher than 1,500 kilocycles.

These disturbances may last as long as several weeks and are caused by vigorous sunspot activity.

c. The most common method of overcoming objectionable fading is to increase the power of the sending transmitter. The use of automatic volume control in the receiver will compensate for minor changes in signal intensity. Another method used to overcome fading at fixed receiver sites is known as *diversity reception.* In this case, two or more receiving antennas are spaced some distance apart, both feeding into the same receiver. Thus, if fading occurs in one, the other antenna may still receive the loud signal.

151. Effect of Frequency on Wave Propagation

a. At *low frequencies* (30 to 300 kilocycles) the ground wave is extremely useful for communication over great distances. Since the ionosphere is not depended upon at these frequencies, the signals are quite stable and show little seasonal variations. At greater distances the sky wave becomes of more importance than the ground wave, and is fairly reliable if suitable frequencies are selected.

b. In the *medium-frequency band* (300 to 3,000 kilocycles), the range of the ground wave varies from about 15 miles at 3,000 kilocycles to about 400 miles at the lower frequencies of the band. Sky-wave reception is possible during day or night at any of the lower frequencies in this band, but the daytime absorption of the sky wave increases with increases in frequency up to 1,400 kilocycles. Beyond this point the absorption decreases with increases in frequency until the *very-high-frequency (v-h-f) band* is reached. Therefore, at the higher frequencies of the medium-frequency band, daytime sky-wave reception is not possible, owing to high absorption. At night, however, the sky wave gives reception at distances up to 8,000 miles.

c. In the *high-frequency band* (3 to 30 megacycles), the range of the ground wave decreases with increase of frequency. Sky waves in this range of frequencies are mostly governed by ionospheric considerations. At night there may be a skip zone for frequencies as low as 3 megacycles, and frequencies above 8 to 10 megacycles will penetrate the ionosphere at all angles. In the daytime, however, the ionospheric conditions are different. Frequencies of about 3 megacycles will be too heavily absorbed in the daytime to be of much value at any distance. For short distances, up to a few hundred miles, frequencies between 5 and 10 megacycles will skip in the daytime. For long distances, however, frequencies from 15 to 30 megacycles may be used, depending upon the many ionospheric variables previously mentioned.

d. In the lower frequencies of the very-high-frequency (v-h-f) band (30 to 300 megacycles), there is no usable ground wave and only slight reflection of sky waves by the ionosphere. Communication is successful if the transmitting and receiving antennas can be elevated sufficiently

above the surface of the earth to allow the use of a *direct wave* (a sky wave that has not been reflected). Owing to sporadic conditions in the ionosphere, transmission over any great range is possible only for short periods of time.

e. In the ultra-high-frequency (u-h-f) band (300 to 3,000 megacycles, and above), the direct wave must be used for all radio transmissions, and communication is limited to a short distance beyond the horizon. Lack of static and fading in these bands makes line-of-sight reception very satisfactory. Highly directive antennas can be built into small spaces to concentrate r-f energy into a narrow beam, thus increasing the signal intensity.

152. Dummy Antennas

When testing radio transmitting equipment within many miles of a combat zone, it is not permissible to use a radiating antenna, since this would not only divulge the location of the transmitter to enemy direction finders, but would also clutter up the air with unnecessary signals. To eliminate the possibility of unauthorized signals going on the air, a *dummy antenna* is used. This device will act as a load for the transmitter without radiating a signal. Dummy antennas consist of a capacitor of sufficient capacitance to pass the required transmitter r-f output, and a resistor large enough to absorb this energy and dissipate it in heat. These elements are connected in series across the transmitter output terminals. Dummy antennas used for test purposes usually have several capacitors in series, and are tapped at various values so as to approximate the capacitive reactance required to cover a wide band of frequencies.

153. Receiving Antennas

Any good transmitting antenna is also a good receiving antenna, especially when receiving the frequency for which it is designed. Because of this fact most Army radio sets employ the same antenna for both transmission and reception. In many cases, good reception may be obtained with a makeshift antenna, owing to the strong signal existing at the point of interception. However, the more accurate the design and construction of the receiving antenna, the better will be the reception.

SECTION XV

VERY-HIGH-FREQUENCY COMMUNICATION

154. General Characteristics of v-h-f Waves

a. The term *very-high-frequency* relates to those frequencies of the radio spectrum lying between 30 megacycles and 300 megacycles, or, expressed in wavelengths, from 10 meters to 1 meter. Radio transmissions of many types are common in the v-h-f band, chiefly because of the absence of atmospheric disturbances and the general stability of transmissions at these frequencies.

b. V-h-f waves, in general, are not regularly returned to the earth at great distances. Normal communication by means of very high frequencies is best within the line-of-sight range, but will, in general, be possible up to two or three times this distance because of atmospheric refraction. Communication over much greater distances, far beyond the horizon, is occasionally possible as a result of unusual atmospheric or ionospheric conditions, but v-h-f radio systems are seldom used for army ground purposes when the distance between transmitter and receiver antennas is more than 30 miles. Airborne equipment, because of favorable elevation, is often capable of useful work of several times these ranges.

155. Propagation of v-h-f Waves

a. For frequencies above about 30 megacycles, the bending of the waves in the normal ionosphere layers is so slight that the sky wave plays no important part in communication. Moreover, the ground-wave range also is extremely limited because of high absorption in the ground at these frequencies. The r-f energy from the transmitting antenna is radiated in a *direct wave* through the atmosphere to the receiving antenna. The transmitting and receiving points should be sufficiently high to provide such a transmission path. In calculating v-h-f range, the curvature of the earth as well as the intervening terrain must be taken into account.

b. The height of the antennas determines how far apart they may be located and still receive the v-h-f signal. The v-h-f horizon distance can be calculated by a simple formula. This formula is strictly accurate only over water, or when the intervening ground is almost level, but it

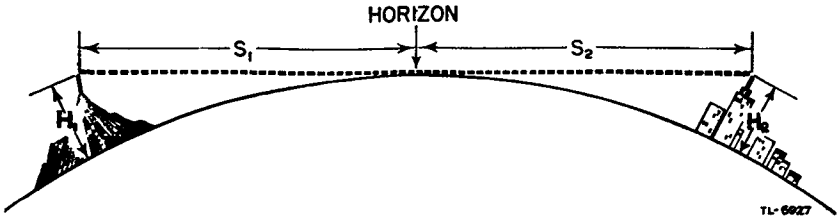

Figure 247. Method of determining total line-of-sight distance when both transmitter and receiver are elevated. (Direct ray path will be the sum of the two horizon distances, S_1 and S_2.)

serves as a useful guide in less ideal conditions. When the height in feet *(H)* of a transmitting antenna above ground level is known, the distance to the v-h-f horizon in miles can be found from this relation:

$$S \text{ (v-h-f horizon distance)} = 1.42\sqrt{H}$$

The v-h-f horizon distance found by the above equation assumes that the distant receiving antenna it a ground level. (See app. III.) When the distant receiving antenna is elevated, as is more often the case, the total v-h-f path is the *sum of the two v-h-f horizon distances for each of the antennas,* as computed by the above formula. In other words, the total v-h-f distance from tower H_1 to tower H_2 (fig. 247) becomes—

$$S_1 + S_2 = 1.42\sqrt{H_1} + 1.42\sqrt{H_2}$$

c. Under certain meteorological conditions, the range of transmission of v-h-f waves is sometimes very great, owing to an increased refraction in the troposphere (lower atmosphere). V-h-f transmissions at distances up to 600 miles have been observed under these unusual conditions. But such conditions are rare and cannot be depended upon for consistent and reliable communication.

d. V-h-f waves readily show the effects of *polarization,* particularly when the direct wave is used for local communication. Thus, if a horizontal dipole antenna is used at a transmitting set, it will be necessary to use a similar horizontal antenna at the receiver for optimum results. Similarly, a vertical antenna will radiate vertically polarized waves, which will require the use of a vertical receiving antenna.

156. Circuit Elements at Very High Frequencies

a. The circuits used at very high frequencies are much the same in technical theory as the circuits used at any of the lower communication frequencies, but the physical constructional features become more important as the frequency increases. This is because the physical dimensions of the v-h-f circuits become comparable with the wavelength of the v-h-f signal passing through the circuits. Standing waves

within the circuit are common, with the result that the currents and voltages are not of the same magnitude at one point in a conducting wire as they are at another point.

b. At the very high frequencies, the size and relative location of every component of a transmitter or receiver is of importance. There is some capacitance present between every point on a wire and the components which surround it. The distributed inductance and capacitance of every wire and component has an effect upon the operation of the v-h-f circuit as a whole. Often a single, short, straight wire can be used in place of a coil and capacitor to tune a v-h-f circuit, since it possesses the necessary distributed inductance and capacitance. All parts of the v-h-f circuit at high r-f potential must be well insulated.

c. As the frequency of a current in a conductor increases, the current tends more and more to travel on the outside of the conductor, and at very high frequencies the current travels entirely on the surface of the conductor. This is known as *skin effect.* The resistance can only be kept down by employing conductors with very large surface areas, such as copper tubing. Quarter-wave concentric (coaxial) tubing units are often used as tuning circuits at the very high frequencies.

157. Vacuum Tubes at Very High Frequencies

a. As the frequency is increased to the order of two hundred million cycles per second, the time for electrons to travel from the cathode to the plate in a vacuum tube becomes an appreciable part of one complete cycle. A voltage on the control grid of the tube may change the number of electrons flowing to the plate, but this change will not affect the plate current until some time later. Therefore the transit time of the electrons can be thought of as the equivalent of an inductive lagging effect in an ordinary circuit. The tube interelectrode capacitances (between elements of the tube) also become of serious importance at very high frequencies. To eliminate both of these objectionable limiting effects present in all ordinary vacuum tubes at very high frequencies, special vacuum tubes have been developed. The "acorn" and "doorknob" tubes are examples of this type. The most suitable vacuum tubes for v-h-f use are those having low interelectrode capacitance, close spacing of the electrodes to reduce transit time, a high amplification factor, and a low or medium optimum value of load impedance. While some of these requirements are necessarily conflicting, tubes have been produced which are well adapted for v-h-f operation.

b. In considering transmitter vacuum tubes for v-h-f use, it is necessary to take into consideration factors which are negligible at lower frequencies. Because of the flow through the tube elements of heavy charging currents at v-h-f, there is a risk of lead heating, and the tube efficiency is reduced because of transit time and impedance losses. Further, the circuits usually constitute a rather heavy load for

the individual v-h-f tubes. For these reasons, ordinary tubes have to be run at considerably reduced grid and plate voltages (resulting in even lower efficiency). Triode transmitting tubes are very difficult to neutralize. Pentodes at very high frequencies have the disadvantage of having very high input capacities.

158. Concentric-line Tuned Circuits

At extremely high frequencies, it is difficult to obtain a satisfactory amount of selectivity and impedance from an ordinary coil and capacitance used as a resonant circuit. At these frequencies, quarter-wavelength sections of concentric transmission lines are not only better, but also are of practical dimensions. Full quarter-wavelength lines will resonate regardless of the ratio of diameter to conductor spacing, and they can be tuned (if not loaded with capacity) by substituting a variable capacitor for the shorting bar or disk.

159. V-h-f Receivers

a. The reception of signals in the very-high-frequency band (30 to 300 megacycles) is accomplished by any one of three different types of receivers, depending on the frequency to be received. The superheterodyne is used almost universally on frequencies below 60 megacycles (5 meters), because of its stability and selectivity. Although superheterodynes can be built to operate as high as 100 megacycles (3 meters), the superrengenerative type of receiver is much more widely used, and above 100 megacycles (3 meters) it is used almost exclusively. The third type of receiver uses tuned concentric lines and special v-h-f vacuum tubes for the reception of waves at and above 300 megacycles (1 meter).

b. The general circuit for the v-h-f superheterodyne is similar to that for the superheterodyne used at lower communication frequencies,

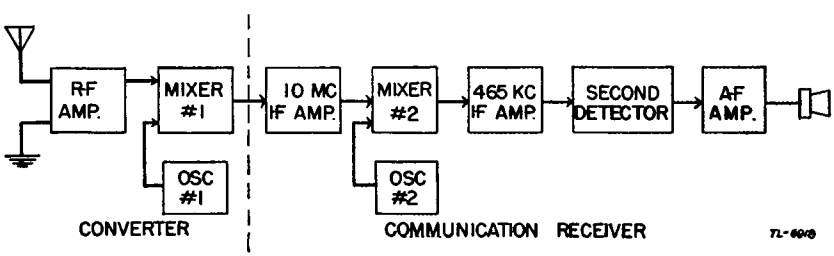

Figure 248. Block diagram of typical v-h-f superheterodyne.

with a slight modification to increase the selectivity. The block diagram of a typical v-h-f superheterodyne, designed to operate on about 60 megacycles (5 meters), is shown in figure 248. The incoming v-h-f signal is amplified and applied to the mixer stage. A locally

generated oscillation is mixed with the signal, and the result is an intermediate frequency of about 10 megacycles. Since high selectivity, however, cannot be obtained with a reasonable number of circuits at 10 megacycles, this frequency is further amplified and fed to a second mixer. A second oscillator-mixer combination produces a *second* intermediate frequency of about 465 kilocycles, which is then acted upon in the conventional manner. Thus, the v-h-f superheterodyne has two intermediate frequencies. Amplification takes place at both before the signal is finally rectified and changed to audio frequency. The unit containing the first mixer, oscillator, and r-f amplifier stages is known as a *converter,* since it converts the v-h-f input signal into a lower r-f signal which can be handled by a normal superheterodyne receiver.

c. Superregenerative receivers are used for the reception of very high frequencies from 100 megacycles (3 meters) to 300 megacycles (1 meter). These receivers are of two types. In the first, the *quenching* voltage is developed by the detector tube itself; in the second, a separate oscillator tube is used to generate the quenching voltage. The superregenerative receiver has the advantage of good sensitivity, but its selectivity does not compare with that of the superheterodyne. The superrengenerative receiver is particularly well suited for portable equipment which must be kept as simple as possible.

d. Receivers for operation at 300 megacycles (1 meter) and higher require vacuum tubes of special design, and resonant (linear) con-

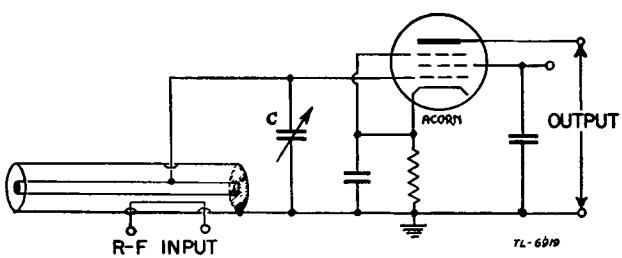

Figure 249. Receiver using quarter-wave concentric line in tuning circuit.

centric lines in the r-f tuned circuits. The circuit diagram for a typical receiver of this type is shown in figure 249. A quarter-wave resonant concentric line is used as the grid-tuning circuit of a simple r-f detector stage. An h-f "acorn" tube is used as the detector in this stage.

160. V-h-f Transmitters

a. The oscillator circuits used in v-h-f transmission are all based on the fundamental oscillator types discussed in section X, although they may be modified considerably to compensate for any inherent capacitance and inductances which might be negligble at lower frequencies.

Vacuum-tube interelectrode capacitance becomes of increasing importance at very high frequencies, and the highest possible frequency to which a tube can be tuned is limited by the shortest possible straight-wire connection between the tube elements, as well as by the effect of other internal leads and the interelectrode capacitance in the tube. The tube usually will not oscillate up to this limit, however, due to other losses in the tube, and loading effects. With small radio tubes of ordinary construction the upper limit of oscillation is about 150 megacycles (2 meters). In order to obtain oscillations at higher frequencies, it is necessary to use specially constructed v-h-f tubes having a low interelectrode capacitance and low internal lead inductance. These special tubes are capable of developing oscillations at frequencies of 300 megacycles (1 meter) and higher.

b. Ordinary coil-and-capacitor tuned circuits are seldom used at frequencies above 100 megacycles (3 meters), and are replaced by *linear tuned circuits.* These linear tuned circuits are usually a quarter-

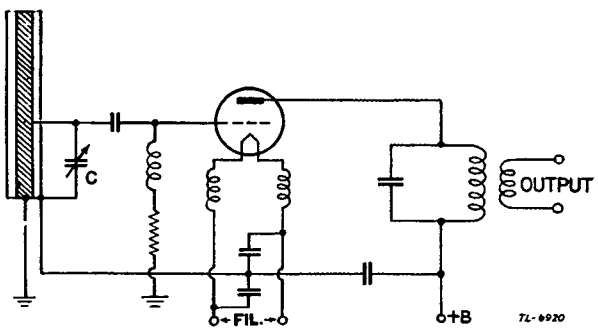

Figure 250. Tuned-grid tuned-plate v-h-f oscillator using concentric line as resonant tank of grid circuit.

wave in length, but can be any multiple of that length without affecting the resonant properties of the resonant circuit. A typical v-h-f oscillator is shown in figure 250. This oscillator is a tuned-grid, tuned-plate oscillator with a tuned concentric line replacing the usual coil-and-capacitor grid tank circuit. The circuit of figure 250 is tuned by means of varying the position of a sliding piston at the shortened end of the tuned concentric line.

c. At very high frequencies stabilized oscillators may be coupled directly to the antenna for c-w transmission. Master oscillators are generally used to drive modulated amplifiers. The driving power required by an amplifier may be quite high, if there are leads of any appreciable length from the grid or plate to any tuning capacitor other than the one used as a shorting bar, or if the capacitor has a long inductive path through its frame. The returns from these circuits to the cathode are important, especially in single-ended stages, and should

never be moved from their original position. Any lead inductance can be reduced somewhat by using copper ribbon for connections, instead of smaller wire. This will also overcome *skin effect.*

d. Both in transmitters and receivers, regeneration or oscillation often results from the use of cathode bias not adequately bypassed for very high frequencies. Ordinary bypass capacitors have considerable inductance, which, combined with their capacitance, may introduce a sizable reactance into the circuit.

e. Inductance and capacitance properties of a straight length of wire are not particularly troublesome at the lower radio frequencies. When working with very high frequencies, however, the inductance and capacitance of even the shortest length of wiring may represent a large part of the total inductance and capacitance of the individual circuits. The wiring must, therefore, be made as short as possible. This important fact must be kept in mind when replacing parts in any v-h-f circuit.

161. V-h-f Antenna Systems

a. The nature of v-h-f propagation calls for two requirements in v-h-f antennas. The first is that the antenna should be elevated as much as possible. At these frequencies, antenna height is of more importance than low-angle radiation. The second requirement is that both transmitting and receiving antennas must be in the same plane, either vertical or horizontal, for maximum signal strength. Althuogh vertically polarized waves (from a vertical radiator) are more commonly used, horizontally polarized waves are generally preferable for long distance transmissions. The antenna system for both transmitting and receiving should be as high above the earth as possible, and clear of any nearby objects.

b. Transmission lines, consisting of concentric lines, or spaced two-wire lines, can be used to couple the antenna system to the transmitter or receiver. Nonresonant feeder lines are more efficient at very high frequencies than those of the resonant type.

c. Insulation is of prime importance at very high frequencies. Many insulators that have very low losses at frequencies as high as 30 megacycles (10 meters) break down completely at frequencies above 100 megacycles (3 meters). Even low-loss ceramic insulators are not satisfactory at ultra high frequencies when the r-f voltage is high. One of the best and most practical u-h-f insulators is polystyrene. It is common practice to design v-h-f antenna systems so that the various radiators are supported only at points of relatively low voltage. Since the normal voltages on untuned feeder lines are not high, the type of insulation is not critical.

SECTION XVI

CATHODE-RAY TUBE

162. Cathode-ray Tube

a. This is a special type of vacuum tube in which the electrons emitted from a cathode move at a very high velocity, are formed into a narrow beam, and then strike a chemically prepared screen which *fluoresces,* or glows, at the point where the electron beam strikes. Since the narrow beam of moving electrons is *negative* in polarity and has practically no weight or inertia, it can be easily deflected by a *positive* charge. This positive charge, which can be either electromagnetic or electrostatic in character, is applied to the beam by means of deflecting plates, usually located inside the tube. Since electrostatic deflection is more commonly used in modern cathode-ray tubes, this type of deflection will be assumed throughout this discussion.

b. The construction of a typical cathode-ray tube is shown in the pictorial diagram of figure 251. The cathode releases free electrons when heated by the enclosed filament. A cylindrical grid surrounds the cathode and controls the beam intensity by controlling the number of electrons that pass through the end opening of the grid. This control action is accomplished by varying the negative voltage on the grid.

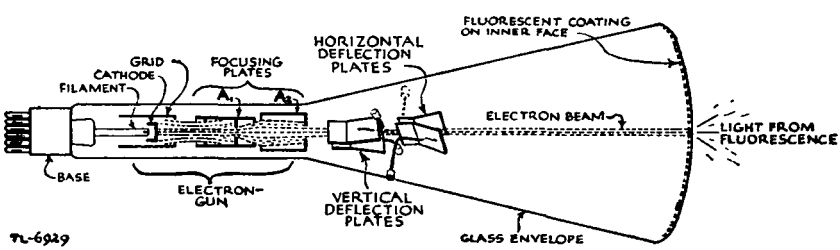

Figure 251. Simplified construction of typical cathode-ray tube.

After leaving the grid, the electron stream passes through two or more cylindrical *anode focusing plates,* which concentrate and focus the electrons into a narrow beam. The anode plates, A_1 and A_2 (fig. 251), are representative of one type of focusing arrangement. Other types and shapes are used in various cathode-ray tubes, but their effect on the stream of electrons is identical in function. Referring again to figure

251, the first anode, A_1, concentrates the free electrons into a beam, while the second anode, A_2, accelerates their velocity. The electrodes described up to this point constitute the *electron gun,* which produces free electrons and then projects them in a slender, concentrated, rapidly moving beam on the fluorescent viewing screen at the end of the tube.

c. The electron gun alone produces only a small spot on the screen. When, however, the beam of electrons is deflected by either electrostatic or electromagnetic fields, the spot moves across the screen in proportion to the force exerted by the deflecting field. When the motion of the electron beam is sufficiently rapid, the persistence of vision makes the path, or trace, of the moving spot appear to be a continuous line. The more common cathode-ray tubes employ the electrostatic deflection of one pair of plates to exert a force on the beam in a *vertical plane,* and the deflection of another pair of plates to exert a force in the *horizontal plane.* These deflecting plates are designated as vertical and horizontal plates, respectively (fig. 251), and are mounted at right angles to each other. The electrostatic fields are created by applying suitable voltages between the two plates of each pair. One plate of each pair usually is connected to the second anode of the electron gun to establish the proper polarities of the fields with respect to the beam and with respect to the other. Thus, to move the electron beam, it is only necessary to apply a positive or negative voltage (with respect to ground) to one of the ungrounded, or free, deflecting plates. If the voltage is positive with respect to ground, the electron beam will be attracted by the deflecting plate; if negative it will be repelled. The amount of deflection is directly proportional to the voltage applied to the free deflecting plate.

d. The *fluorescent screen* consists of certain chemicals deposited on the inside wall at the end of the tube. When this chemical coating is struck by the fast-moving electron beam, it emits a green, white, blue, or yellow light, depending upon the screen material. After the impact, the emission of light persists for a brief interval, usually only a fraction of a second. The persistence of a cathode-ray tube screen is the time duration of the *afterglow,* which exists after the electron beam has been removed. Screens are classified as being of long, medium, or short persistence. They are also classified as to color, green and white being the common colors encountered in general radio work.

e. The operating potentials for various electrodes of a cathode-ray tube will vary from 500 volts for miniature types to several thousand volts for the larger types. Since the current used is very small, the resultant power consumption is also small. It should be noted that the power supplies for a cathode-ray tube always have the positive-output side grounded. Thus, most of the high voltage developed is below ground, instead of above ground, as in conventional power supplies. The last anode of the electron gun is generally at or near ground

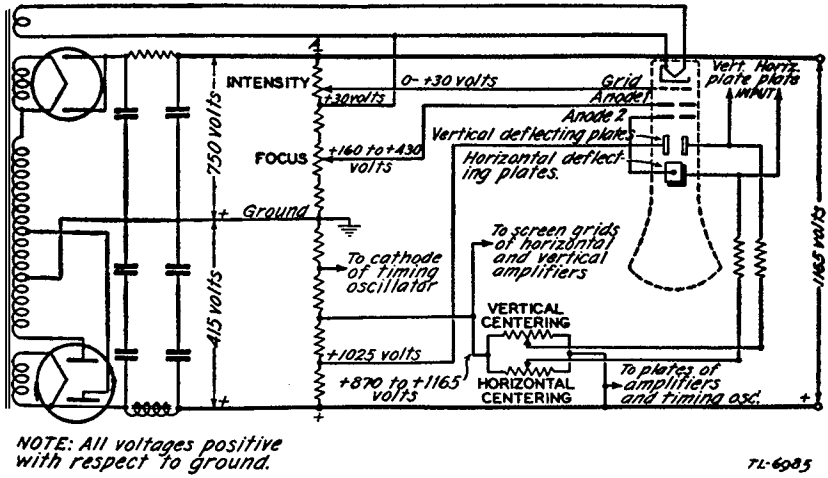

Figure 252. Simplified circuit diagram of typical cathode-ray tube power supply, and representative voltages.

potential. The various intermediate electrode voltages necessary to operate the cathode-ray tube are usually obtained from a voltage-divider resistance circuit, as shown in the typical power circuit of figure 252. Since the cathode of a cathode-ray tube is usually at a relatively high potential (with respect to ground), this element must be well insulated.

f. The control marked *intensity* (fig. 252) is a potentiometer which varies the voltage on the grid, or control, electrode. A decrease in grid-bias voltage results in an increased electron flow. This causes a greater number of electrons to strike the screen, thus producing an increase in spot intensity on the screen. Conversely an increase in grid-bias voltage results in a decrease in spot intensity. The *intensity control* is also referred to as the *brightness control.*

g. The control marked *focus* is a potentiometer which varies the voltage on the first anode of the electron gun. This alters the voltage ratio between anodes 1 and 2, and thereby permits a change in their focusing effect. When the image on the screen is sharp and clear, the spot, or image, is in focus.

h. Owing to occasional imperfections in manufacture, it is possible that the electron gun may not project the stream of electrons on the exact center of the viewing screen. This may be true when no difference of potential exists on either set of deflecting plates. To correct for this deviation, or intentionally to adjust the spot to an off-center position, two controls, *vertical centering* and *horizontal centering,* are provided. These controls vary the amount of d-c potential existing between the two free deflecting plates. One method of varying the fixed, or *standing,* voltage applied to each of the two free deflecting plates is shown in figure 252.

i. The chief use of the cathode-ray tube is in the *oscillograph,* or *oscilloscope,* which provides a visual means of examining and measuring alternating current and voltage waveforms. Because the electrons have so little mass, the beam responds at much higher frequencies than any other electrical indicating device, and the range of applications of the oscillograph, therefore, is practically unlimited. The *electron gun* of the cathode-ray tube is used in a modified form in many other electronic tubes, such as the electron-ray tuning indicator, television tubes, radar tubes, and atom-smashing apparatus.

163. Cathode-ray Oscillograph

a. The oscillograph is one of the most important and reliable test instruments used in the maintenance of radio equipment, since it permits a *visual* examination of various electrical and radio phenomena which would not otherwise be possible. Just as the loudspeaker is the link between electrical waves and audible sound waves, the cathode-ray oscillograph is the link between electrical waves and visual reproductions of the waves.

b. An oscillograph is essentially a cathode-ray tube operating with an appropriate power supply, and with some provision for supplying a deflection, or sweep, voltage which is generally applied to the horizontal deflecting plates. It is also equipped with vacuum-tube amplifiers for increasing the amplitude of small a-c voltages, which are generally applied to the vertical deflecting plates. The block diagram of a typical cathode-ray oscillograph is shown in figure 253. It comprises a cathode-ray tube, signal amplifiers for each of the two sets of deflecting plates, a sweep-circuit oscillator, and an adequate power supply for operating all of these various components. Provision is generally made for

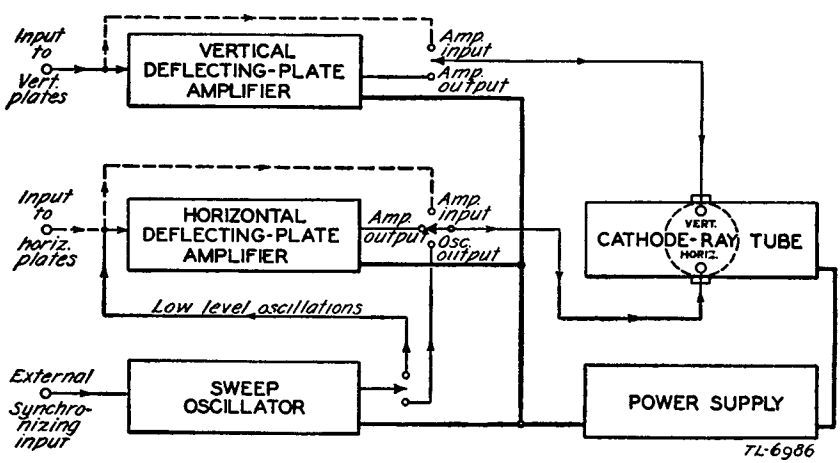

Figure 253. Block diagram showing components of cathode-ray oscillograph.

switching out the amplifiers for either the horizontal or vertical deflecting plates, in case the incoming signal is so high as not to require amplification (fig. 253). Although an input connection is available to both pairs of deflecting plates via the amplifiers, the signal under observation is usually fed to the vertical plates, and the sweep voltage from the oscillator to the horizontal plates.

164. Formation of Oscillograph Patterns

a. Various voltages on one or both sets of deflecting plates will cause proportionate deflections of the electron beam and corresponding movements of the spot on the viewing screen. To illustrate the positioning and movement of the spot on the screen, a simple circuit supplying d-c potentials to each of the two sets of deflecting plates is shown in figure 254. It will be noted from this circuit that various d-c potentials

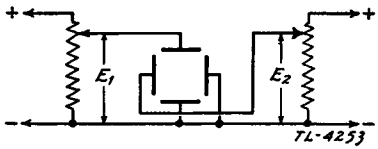

Figure 254. Circuit for spot positioning by means of d-c potentials.

can be applied to one plate of either the horizontal or the vertical deflectors. Potentiometers are used to control the different values of voltage needed to move the spot on the cathode-ray tube screen. Figure 255 shows the spot positions for various voltages applied to the deflecting plates. Figure 255① shows the spot position when voltage E_1 is positive and E_2 is zero. If both E_1 and E_2 were zero, the spot would be in the center of the screen. Figure 255② shows the spot when voltage E_1 is zero and E_2 is positive. In each case the spot movement is proportional to the d-c potential. The vertical and horizontal deflections obtained are at right angles to each other, owing to the physical position of the two sets of deflecting plates in the cathode-ray tube. At ③ the spot position results from the fact that E_1 and E_2 are equal in magnitude and positive in polarity. Since the voltages are the same in magnitude, the deflecting force is the same in both the vertical and horizontal directions; hence the spot moves to a position on an imaginary line which is 45° from either the vertical or horizontal axis. If different values of positive voltages are applied to the plates, the spot can appear at any position within the confines of the upper left-hand, cross-hatched area of ④. By changing the polarity of E_2, the spot can be made to appear at any position within the confines of the upper right-hand, cross-hatched area of ④. Similarily, if E_1 is changed in polarity also, the spot may appear at any position within the confines

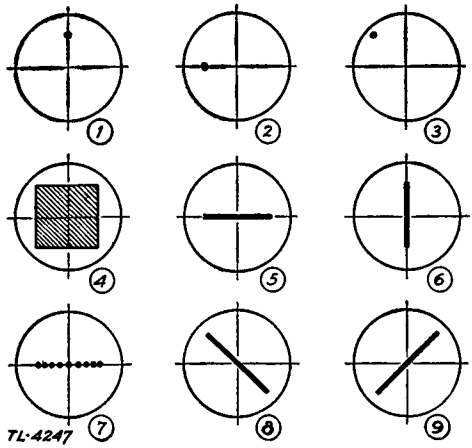

① *Spot position when E_1 of figure 254 is positive and E_2 is zero.*
② *Spot position for E_1 zero and E_2 positive.*
③ *Spot position for both E_1 and E_2 positive and of equal magnitude.*
④ *Area in which spot may be caused to appear by use of various combinations of voltage magnitudes and polarity.*
⑤ *Trace caused by applying a-c voltage across E_2, with E_1 zero.*
⑥ *Trace caused by applying a-c voltage across E_1, with E_2 zero.*
⑦ *Illustrating how spot may be viewed at extremely low frequencies, with voltage condition as in ⑤.*
⑧ *Illustrating trace caused by application of in-phase voltages across E_1 and E_2.*
⑨ *Illustrating trace caused by application of voltages 180° out of phase across E_1 and E_2.*

Figure 255. Positions of spot on screen for various voltages applied to deflecting plates, using circuit and voltages of figure 254.

of the lower right-hand, cross-hatched area. If E_2 is changed back to its original polarity, the spot will appear at any position within the confines of the lower left-hand, cross-hatched area. It is of course understood that the voltages are varied by means of the two potentiometers, in order to position the spot after the polarities have been chosen. It will now be assumed that 2-cycle a-c voltage (d-c removed) is impressed across E_2, and that E_1 is zero. The spot will be caused to move back and forth across the screen horizontally four times per second, as shown at ⑦. If the impressed a-c voltage is sinusoidal, the spot will move rapidly at the center and slowly at the ends of its trace. If the frequency of the impressed voltage is increased to 20 cycles or more, the spot will no longer be seen, but instead will cause a horizontal trace, as shown at ⑤. If the a-c voltage were applied across E_1 with E_2 zero, the trace would be vertical, as shown at ⑥. At 20 cycles or less, the movement of the spot can be followed by the eye. At frequencies higher than 20 cycles, however, the motion of the spot cannot be followed. If the image registers approximately 20 or more times per second it appears continuous, and in the case of the fluorescent spot,

the trace shows as a solid line. The retentivity of the screen's chemical preparation also adds to the persistence of the trace. When identical sine-wave voltages are applied to the horizontal and vertical plates at the same time, the resulting fields cause the spot to trace a sloping line, as shown at ⑧. Identical voltages are voltages that have equal magnitude, frequency, and phase. The same voltages of ⑧ are shown at ⑨, except that they are exactly 180° out of phase.

b. The trace of the moving spot shown in figure 255⑧ results from applying sine-wave voltages of equal magnitude, phase, and frequency on the vertical and horizontal plates at the same time. The complete geometrical development of the trace is shown in figure 256. In this

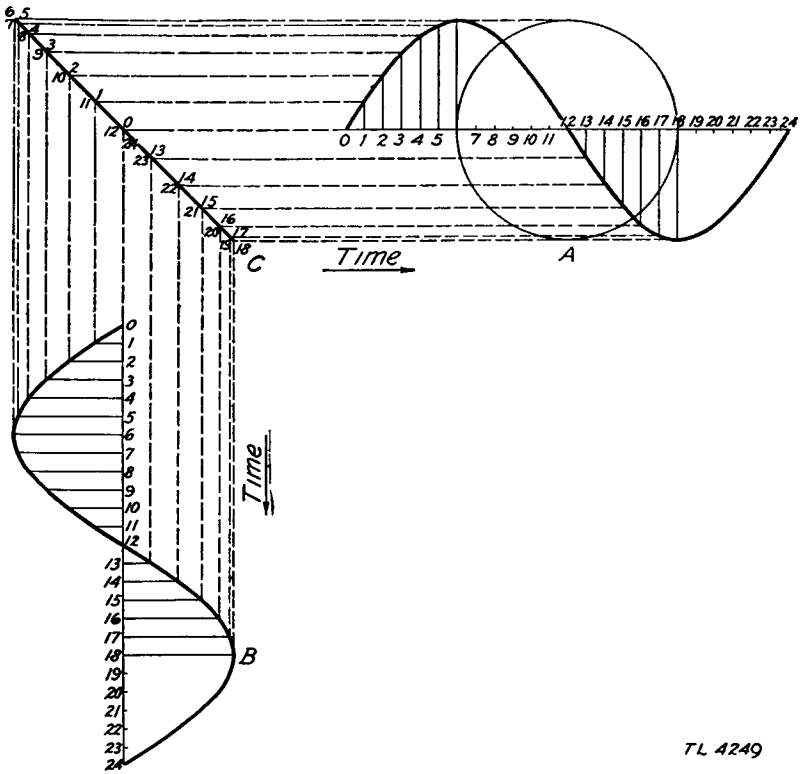

Figure 256. Pattern C, resulting from application of in-phase voltages of a 1-to-1 frequency ratio to vertical and horizonal deflecting plates.

case, the sweep frequency (wave *B*) is the same as the frequency of the voltage on the vertical plates (wave *A*). The voltage on the vertical plates (wave *A*) is the waveform under observation. The resulting pattern *C* is useful in determining phase relation between the two applied voltages, but does not reveal anything regarding the magnitude of the wave *A* with respect to time.

c. To reproduce waveform *A* of figure 256 on the screen for closer examination of its magnitude and wave shape, an entirely different waveform *B* from the sine wave of figure 256 must be applied. The new waveform, known as a *timing wave,* or *sweep frequency,* should have a uniform voltage variation, as shown in the saw-tooth wave of figure 258. The timing wave must start at some predetermined point on the screen, travel across the screen at a *uniform rate,* and then return to the starting point to begin a new cycle. The return period of the beam is not of special interest, and therefore is usually kept as short as possible. If the saw-tooth timing wave is applied to the horizontal deflecting plates and the sine-wave voltage to be examined is applied to the vertical plates, the resultant pattern traced out on the screen by the moving electron beam will be almost identical to the original input sine-wave voltage. Figure 257 shows the geometrical form of the wave *C*, produced by applying the sine-wave *A* on the vertical plates and sweeping it with the saw-tooth timing wave *B*. The need for

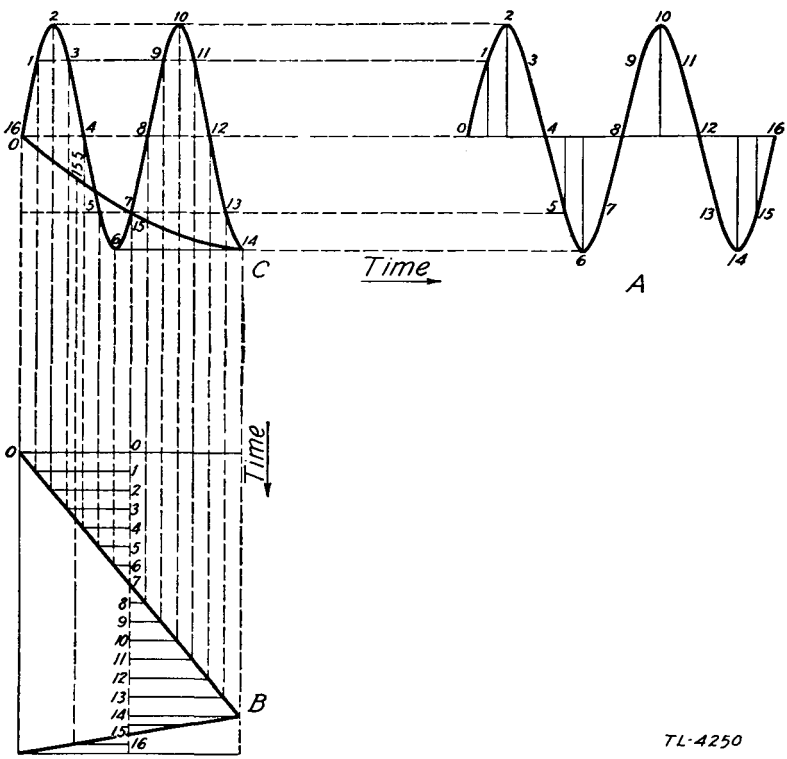

Figure 257. Pattern C, resulting from application of in-phase voltages of frequency ratio of 2-to-1. (A sine-wave voltage is applied to the vertical deflecting plates; the lower frequency timing-wave (saw-tooth) voltage is applied to the horizontal deflecting plates.)

a saw-tooth, or linear, timing wave should be evident. It is the purpose of the oscillator in the oscillograph to supply this necessary waveform.

165. Sweep-circuit Oscillators

a. The wave shape desired for timing, or sweeping, in an oscillograph starts at zero voltage, increases linearly to a maximum, and then drops to zero to complete the cycle. This voltage-wave shape (fig. 258) is known as a *saw-tooth voltage.* It is called a linear sweep because the

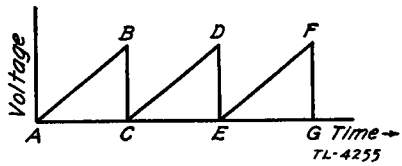

Figure 258. Ideal saw-tooth oscillator timing-axis waveform.

change in voltage is directly proportional to time. Referring to figure 258, as the voltage increases from point *A* to point *B,* the electron beam is swept from left to right horizontally. As the wave drops from maximum voltage at point *B* to zero voltage at point *C,* the electron beam is snapped back to its starting position and ready to start the next sweep.

b. Saw-tooth sweep-circuit waveforms may be produced in a number of ways. However, the most frequently used method is that of a *relaxation oscillator* employing a gas-filled triode tube. The circuit diagram of a sweep-circuit oscillator of a typical oscillograph is shown

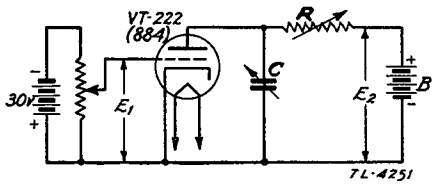

Figure 259. Circuit diagram of saw-tooth oscillator using VT–222.

in figure 259. The tube used in such an oscillograph is the VT–222 (commercial type 884). Operation of this type of gas-filled tube in the sweep-oscillator circuit is made possible by the fact that a negative voltage on the grid either maintains plate-current cut-off or promptly loses control, depending on the value of the plate voltage. After grid control is lost, it can be restored only by reducing the plate voltage below the ionization potential of the gas in the tube. This action can be controlled by a capacitor shunted across the plate circuit and charged through a current-limiting device. When the plate voltage reaches break-down potential, the capacitor discharges through the

tube (since the gas is ionized and becomes a conductor), the plate voltage drops, the grid resumes control, and a new cycle starts. Tube VT–222 is characterized by its extremely low de-ionization time, which allows it to be used for high-frequency operation. The voltage drop between plate and cathode while the tube is carrying current is approximately 16 volts. In the simple saw-tooth oscillator circuit, shown in figure 259, capacitor C is charged by battery B through resistor R. The grid-bias voltage E_1 prevents current from flowing through the tube until the voltage across the capacitor and plate circuit reaches the break-down value. At this point, the capacitor discharges through the tube and loses its potential. As soon as the capacitor voltage drops below the ionization potential of the tube, the negative grid attracts any positive ions to itself and drives any electrons to the other tube elements, thus de-ionizing the space between the cathode and plate. During the de-ionization period, the discharge current ceases to flow, the grid resumes control, and the capacitor starts to recharge for a new cycle.

c. The frequency of oscillation of the circuit shown in figure 259 is determined by the values of R and C. If the value of C is increased, more current must flow into it to raise its potential to the break-down point, and consequently the time required to sweep the screen is greater. Thus, the frequency is lower. Briefly, the higher the value of C the lower the frequency; the lower the value of C the higher the frequency. Also, for a given value of C, the charging period can be increased by increasing the value of R, which is equivalent to lowering the frequency. In short, decreasing R increases the frequency; increasing R decreases the frequency. Since the grid bias controls the plate potential at which break-down occurs, it also varies the frequency. At a lower break-down potential less time is required to charge capacitor C, hence the frequency is higher. A greater negative bias requires a greater plate potential for break-down, and more time is required for charging capacitor C, hence the frequency is lower. Consequently, in order to cover a wide range of frequencies, it is necessary to use a number of fixed capacitors of the proper values and a switch, so that any one of them may be placed in the circuit in conjunction with a variable series resistor. The variable resistor serves as a vernier frequency control, with a sufficient range to overlap the adjacent ranges of the coarser frequency control obtained by selecting the various fixed capacitors.

d. The usual procedure for the observation of a-c waveforms is to operate the sweep-circuit oscillator at a submultiple of the observed frequency, so that several complete cycles will appear on the screen. For example, a 100-cycle sweep voltage will show three complete cycles of a 300-cycle wave. Since the pattern will drift across the screen unless the ratio of observed frequency to sweep frequency remains constant at a definite value, it is necessary to synchronize the voltages.

e. If a small a-c voltage is applied in series with the negative bias on the grid of the gas-triode sweep oscillator, the oscillator will have a tendency to *lock in* when the frequency of oscillation (as determined by the R/C ratio of the charging circuit) approximates that of the *synchronizing voltage,* or a submultiple thereof. This synchronizing voltage is usually fed into the grid of the triode by means of a variable resistance. If insufficient synchronizing voltage is applied to the gas triode, the locking-in will not be positive in action. If too much synchronizing voltage is applied, the waveform of the sweep-circuit oscillator will be distorted. Ordinarily, a fraction of a volt is sufficient.

166. Oscillograph Amplifiers

The usefulness of the oscillograph is enhanced by providing amplifiers for both the horizontal and vertical deflecting-plate voltages, thereby insuring that sufficient signal voltage will be available to produce a screen pattern of suitable size. The amplifiers used in conventional oscillograph circuits are generally of the resistance-coupled type, and may consist of one, two, or three stages of amplification. The amplifier for the horizontal deflecting plates normally amplifies only the sawtooth sweep voltage from the oscillator stage. The vertical deflecting-plate amplifier must operate over a wide range of voltages, passing waves of many shapes, both simple and highly complex. The voltage to be observed or measured is passed through this amplifier. If the unknown signal is of sufficient strength, it may be applied directly to the vertical deflecting plates without amplification.

167. Electron-ray Tuning Indicator

a. An ingenious application of the cathode-ray tube has been developed to aid in the tuning of radio receivers. This tube is known as the *electron-ray tuning indicator.* The internal construction of the device is shown in figure 260. The tube is a combination of an ordinary triode tube, plus two special electrodes, the *target* and the *deflector,* or ray-control electrode. The target of the tube is connected to the high (plate) voltage of the receiver. Electrons from the cathode are attracted to the target. When these electrons strike the inner surface of the target, they cause the coating to fluoresce with a greenish light. The ray-control electrode is a thin vertical vane placed between the cathode and part of the target. Since this vane shades a part of the target, some of the electrons are prevented from striking that part, leaving a nonfluorescent area. The width of shaded area depends on the relative voltages on the target and the ray-control electrode. When the ray-control electrode is less positive than the target, electrons are prevented from striking that part of the target which is blocked by the ray-control electrode. For a strong negative voltage on the ray-

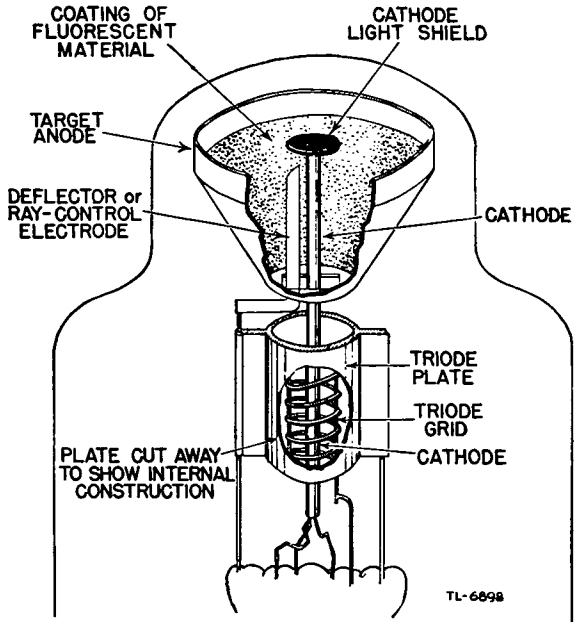

Figure 260. Electron-ray tube.

control electrode (with respect to the target), the *angle of shadow* is large (fig. 261①). When the ray-control electrode is at the same potential as the target, the shadow angle is small (fig. 261②). For intermediate values of voltage on the ray-control electrode (with respect to the target), the angle of shadow is somewhere between the above extremes (fig. 261③). The dark round spot in the center of this ring of light in most electron-ray tubes is caused by a cathode light shield so placed as to make the amount of deflection more noticeable.

Figure 261. Top view of electron-ray tube.

b. The functioning of the electron-ray tube in a circuit is dependent on a supply of a-v-c voltage. A basic circuit is shown in figure 262. If no signal is being received by the receiving set, the a-v-c voltage is zero, and the bias on the triode grid is also zero, thus permitting a relatively high flow of plate current in the tube. This high plate current will produce a high voltage drop across R (by Ohm's law: $E = I \times R$). Consequently, the plate of the tube is much less positive than the B supply voltage for the plate. Note that the target is directly

connected to the B supply voltage and that the ray-control electrode is internally connected to the triode plate. The ray-control electrode, therefore, is negative with respect to the target and the shadow angle is large (fig. 261①). When the receiver is properly tuned to a radio station, the a-v-c voltage is highly negative; therefore the triode of the tube is negative. The resulting plate current of the tube is quite small, and the voltage drop ($I \times R$) across resistor R is also small. For this condition, the plate and the ray-control electrode are nearly as positive as the target, and therefore the shadow angle is quite small (fig. 261②). The shadow angle of the tube varies with the amount of a-v-c voltage developed by the detector, and this voltage in turn depends on the strength of the signal. The a-v-c voltage also will change as the tuning of the receiver is varied from resonance. Thus, the electron-ray tuning indicator serves as a visual indication of both signal strength and current resonance tuning.

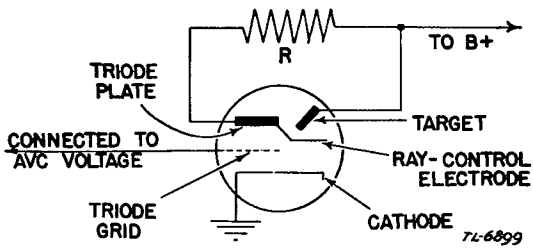

Figure 262. Circuit showing method of connecting electron-ray tube to a-v-c line.

SECTION XVII

RADIO DIRECTION FINDING

168. General

a. The directivity characteristics of certain radio antennas are used by radio direction finders to determine the direction of a distant transmitter by ascertaining the direction of arrival of the incoming r-f wave. Ground direction finders generally use either the loop or Adcock type antenna. Most direction finders and radio compasses used on aircraft and surface craft use loop antennas, because these can be made much smaller and more compact. The principal military use of ground direction finders is to locate the direction of hostile radio transmitters. (See FM 11–20.) Radio compasses and direction finders are used by aircraft to determine the position of the airplane. Radio compasses are also used by aircraft and surface craft for navigation purposes.

b. Radio range beacons make use of directional transmitting antennas, and thus differ from the radio direction finder. Although they will keep an airplane flying on a predetermined course, radio range beacons tell the pilot very little about his actual position. When the actual position must be known, radio direction finders are employed; they are also used for plotting a course not determined by a beam.

SECTION XVIII

CARE AND MAINTENANCE OF RADIO EQUIPMENT

169. Preventive Maintenance

a. The maintenance of radio transmitters, receivers, and related apparatus does not begin when the equipment fails to operate in a normal manner. Maintenance must begin weeks or even months before, when the equipment is first placed in technical operation. Regular daily care and a weekly inspection, known as *preventive maintenance,* are just as important as the actual *test-and-repair maintenance* (par. 171), since, if preventive maintenance is carried out regularly and conscientiously, most of the common faults and break-downs will never occur. Many hours of trouble-free operation will be added to the life of every transmitter and receiver by simple daily care and a weekly examination of all circuit elements and circuit wiring. Only a few minutes each day are needed to insure that the equipment is kept entirely free from dirt, dust, sand, moisture, vermin, or insects; that all cables and plugs connecting different units of the set are clean, tight-fitting, and in no way damaged; and that no part of the equipment is being abused or neglected .

b. From time to time, preferably once every week, periodic thorough inspections should be made as part of preventive maintenance, to determine more accurately the actual operating condition of the radio equipment. Any broken wires or cables, damaged components, or other defects discovered during this inspection must be repaired and adjustments completed as soon as possible. An outline of the important items to be inspected and tested is given in paragraph 170.

170. Outline of Inspection Procedure

a. Battery. Check—

(1) Cleanliness of battery, box, battery cables, and terminals.
(2) Secureness of installation in box.
(3) Depth of battery water (should be ½-inch over plates).
(4) Cable insulation (should be well-soldered and not corroded).
(5) Specific gravity of each battery cell.

b. Radio Receiver. Check—

(1) General cleanliness.

(2) External and internal mechanical connections.
(3) Switches for cleanliness, tightness, and broken knobs.
(4) Soldered connections.
(5) Head set, if one is used.
(6) Vacuum tubes.
(7) Fuses.
(8) Receiver dynamotor for proper lubrication.

c. Radio Transmitter. Check—

(1) General cleanliness.
(2) External mechanical connections for tightness.
(3) Internal mechanical connections for tightness.
(4) Meters for cleanliness and proper operation.
(5) Soldered connections.
(6) Microphone and/or key.
(7) Vacuum tubes.
(8) Fuses.
(9) Plate-current readings of large tubes against normal operating values of plate current in each case.

d. Dynamotor. Check—

(1) Lubrication (excessive or inadequate).
(2) Brushes for cleanliness. (Commutator should be cleaned with a hard surface cloth.)
(3) Fuses.
(4) Soldered connections.
(5) Socket spread, banana connecting points.
(6) Voltage.

e. Cords. Check—

(1) All cords for open circuits and short circuits.
(2) Cleanliness and general condition of cords. (Broken or frayed insulation must be wired back or removed.)

f. Mast Base, Antenna. Check—

(1) For cracked or broken insulators and spacers.
(2) Condition of fiber insulators.
(3) General condition of antenna sections.

g. Metal Cabinets and Covers. Check—

(1) General condition and cleanliness.
(2) Stability and rigidity.

171. Test-and-repair Maintenance

In the normal service life of any piece of radio equipment, faults and break-downs will develop. In order that the necessary repairs may be carried out in a reasonably short time, a logical testing routine must

be followed. The twofold purpose of any test-and-repair procedure is first, the localization of the faulty circuit, or stage, second, the localization of the faulty component or part. The trouble must be discovered as quickly and accurately as possible. The actual procedure to follow can be divided into five parts: visual inspection, electrical inspection, repairs and replacements, final inspection, and the test run. A condensed outline of test-and-repair maintenance procedure is given in paragraph 172.

a. VISUAL INSPECTION. In the visual inspection, a check is first made of plugs, cables, fuses, microphones, head sets, and all other parts which can be examined without removing the set from its case. If no fault is located in this external check, the visual inspection is repeated inside the equipment. Tubes are checked for filament burn-outs; wiring is examined for damage, loose connections, and insulation breakdown; and a rapid examination of parts and controls is made. Metal tubes may be checked for open filaments by feeling their envelopes after the set has warmed up; a cold envelope indicates an open filament. If the visual inspection fails to locate the fault, an electrical inspection must be made.

b. ELECTRICAL INSPECTION. (1) The first step in the electrical inspection of a defective set is the voltage test. The electrode voltages of all tubes should be checked at the tube sockets, and the measured voltages compared with the chart of electrode voltages in the maintenance manual for the given set. The operating voltages of all control circuits should be determined. Voltages differing greatly from specified values indicates a fault in the circuit under test, and further measurements to locate the defective part should be carried out. In most cases, the voltage test will indicate in which circuit the trouble lies. If the voltage test fails to locate the trouble, either a dynamic (operating) test, or a detailed parts check, may be necessary.

(2) In the dynamic testing of a receiver a signal from the test oscillator within the tuning rage is fed into the antenna circuit of the set, and measurements are made at the output of each successive stage to determine in which stage the signal ceases. A cathode-ray oscillograph can be employed in this type of testing. An alternative method of dynamic testing, particularly useful when an oscillograph, vacuum-tube voltmeter, or other signal measuring device is unavailable, is the reverse of the above procedure. For testing the r-f end of a receiver, for example, the signal from the test oscillator is applied in succession to the input circuits of the detector, i-f amplifier stages, mixer, r-f amplifier, and so on. The signal generator or test oscillator must always be tuned to the frequency of the stage under measurement. If no signal is heard in the head set or loudspeaker when the signal generator is connected to a given stage, the fault is in that circuit of the receiver. With the application of a little ingenuity on the part of the repairman.

similar dynamic tests can be devised for any piece of communications equipment. The convenience and speed of this type of test in the localization of faulty circuits cannot be overemphasized.

c. Repairs and Replacements. After the trouble has been definitely located, any repairs or replacements found necessary should be made. In all repairs and replacements, every attempt should be made to duplicate the original condition of the equipment. Standard replacement parts only should be used. Particular care should be taken to run any replacement wiring in the same position and manner as the original wiring. Soldering should be done with rosin-core solder only; the *smallest* amount of solder necessary for a good mechanical and electrical joint should be used. In the event of emergency repairs, where it is impossible to make exact replacement of parts, the same care in workmanship must be taken. The temporarily repaired set should be conspicuously marked or tagged to indicate the temporary nature of the repair, and restored to its original condition at the first possible opportunity.

d. Final Inspection. Upon completion of all repairs and replacements, the equipment should be inspected carefully to insure that no defect has been overlooked, that the workmanship on all repairs is neat and correct, and that all components have been correctly reassembled. In this final inspection, a check of the operating characteristics of the equipment, such as sensitivity, volume, and calibration accuracy of dials, should be made to determine whether the repairs have restored the equipment to a satisfactory operating state.

e. Test Run. After the final inspection has proven the equipment satisfactory from an operational standpoint, a test run should be conducted under conditions which resemble actual operating conditions as closely as possible. This test should be of sufficient duration to determine whether the set will stand up during long periods of operating without overheating or breaking down in any way. If the equipment under test has calibrated controls which are necessary to satisfactory operational use, the calibration accuracy should be checked at the completion of the test run to insure that the set is not drifting.

172. Outline of Test-and-repair Procedure

a. Visual Inspection. (1) *External.* (*a*) Plugs.

(*b*) Cables.
(*c*) Fuses.
(*d*) Microphones, or keys.
(*e*) Headsets.
(2) *Internal.* (*a*) Tubes.
(*b*) Parts.

(*c*) Wiring.
(*d*) Controls.

b. Electrical Investigation. (1) Function of circuit.
(2) Voltage test.
(3) Dynamic tests.
(4) Detailed check of parts.

c. Repairs and Replacements. (1) *Requirements.* (*a*) Duplication of original condition.
(*b*) Use of standard replacement parts.
(2) *Workmanship.* (*a*) Normal repairs.
(*b*) Emergency repairs.

d. Final Inspection. (1) *Workmanship.* (*a*) Mechanical correctness.
(*b*) Electrical correctness.
(*c*) General neatness.
(2) *Operation.* (*a*) Sensitivity.
(*b*) Calibration accuracy.
(*c*) Output.

e. Test Run. (1) Duration.
(2) Operating conditions.
(3) Results favorable, or unfavorable.

APPENDIX I

RADIO ABREVIATIONS

1. General

The use of certain abbreviations to represent radio words, terms, and expressions, both in diagrams and in written matter, has become standard. It is well to understand how they are derived and used. In general, the abbreviation for a basic word is its first letter; thus *w* represents *watts*, and *h* represents *henrys*. If the basic word takes on a prefix (to indicate a larger or a smaller unit) the initial letter of the prefix is combined with the initial letter of the word; thus *kilowatt* becomes *kw*. Radio abbreviations are both singular and plural; the plural form does not take a final *s*.

2. Greek Letter

The Greek letter μ (pronounced *mew*) stands for *micro*, or one-millionth part. It may precede any basic unit of measure. Thus the unit *farad* (a measure of capacitance), which is too unwieldy for practical use, invariably is shortened to the unit *microfarad* (μf), one-millionth part of a *farad*. For extremely small capacitances, the unit *micromicrofarad* ($\mu\mu$f), one-millionth of a millionth part of a farad, is used. The Greek letter μ is also used as a general *symbol* (not as an abbreviation) for the amplification factor of vacuum tubes, and for the permeability of magnetic materials. The symbol is used alone in these connections, and it is not likely to be mistaken for the prefix meaning one-millionth.

3. Letter "m"

a. The letter *m* is the abbreviation for the prefix *milli*, meaning one-thousandth part. Thus, *milliampere* (one-thousandth of one ampere) is abbreviated as *ma*. Small r-f inductors (choke coils) usually have inductance values of a few *millihenrys*, the abbreviation for this unit being *mh*.

b. The capital letter *M* is sometimes used for *mega*, meaning one million. (It is not so used in this manual, however.) It is only used to express *megacycles (Mc)* for one million cycles, and *megohms (MΩ)* for one million ohms. Thus, 20,000,000 cycles may be written as 20 *Mc* or *mc*.

c. In reading books and current magazines, the student may notice irregularities in the use of the prefix letters μ and *m* with the basic measure of the *farad.* In some cases, *mfd* or *mf* are used instead of μf to indicate one-millionth of a *farad.* Since the largest capacitors used in radio work are about 50 microfarads, it is always safe to assume that the abbreviation *mf* or *mfd* means *microfarads* (and not millifarads). In all other cases the small letter *m* stands for ***milli,*** or one-thousandth part.

4. List of Abbreviations

For easy reference the following abbreviations are grouped according to common usage, rather than alphabetically.

a. Basic Expressions.

Group	*Abbreviation*	*Meaning*
Ampere	a, or amp	ampere
	μa	microampere (one-millionth of an ampere).
	ma	milliampere (one-thousandth of an ampere).
Farad	f	farad (rarely used alone).
	$\mu\mu$f	micromicrofarad (one-millionth of a millionth part of a farad).
	μf	microfarad (one-millionth of a farad).
Frequency	f	frequency.
	c, or ⌣	cycles.
	cps	cycles per second.
	kc	kilocycles per second.
	Mc	megacycles per second.
Henry	h	henry.
	μh	microhenry (one-millionth of a henry).
	mh	millihenry (one-thousandth of a henry).
Impedance	X_L	inductive reactance (in ohms).
	X_C	capacitive reactance (in ohms).
	Z	impedance (in ohms).
	G	conductance.
Metric	m	meter (measure of length).
system	mm	millimeter (one-thousandth of a meter).
	cm	centimeter (one-hundredth of a meter).
Ohm	Ω (Omega)	ohm resistance.
	M	megohm (one million ohms).
Volt	v	volt.
	μv	microvolt (one-millionth of a volt).
	mv	millivolt (one-thousandth of a volt).
	kv	kilovolt (one thousand volts).
	kva	kilovolt-ampere (or, apparent power).
Watt	w	watt.
	μw	microwatt (one-millionth of a watt).
	mw	milliwatt (one-thousandth of a watt).
	kw, or KW	kilowatt (one thousand watts).
	p	power (in watts).

b. Circuit and Tube Symbols.

Circuit	L	inductance.
properties	C	capacitance
	R	resistance
Current	I	effective current (rms).
	I_{MAX}	maximum current (peak).
	I_{AVE}	average current.
	i	instantaneous current.

Group	*Abbreviation*	*Meaning*
Power supply	*A*	filament-power supply.
	B	plate-power supply.
	C	grid-bias power supply.
Tube	Fil	filament.
	K, or *k*	cathode.
	H, or *h*	heater.
	G, or *g*	grid.
	Sg	screen grid.
	P, or *p*	plate.
Voltage	*E*	effective voltage (rms)
	E_{MAX}	maximum voltage (peak)
	E_{AVE}	average voltage.
	e	instantaneous voltage.
Miscellaneous	Spkr	loudspeaker.
	Mod	Modulator.
	Ant	antenna.

c. General Expressions.

Current	a-c	alternating current.
	d-c	direct current.
Frequency	a-f	audio frequency.
	r-f	radio frequency.
	i-f	intermediate frequency.
	t-r-f	tuned radio frequency.
	b-f	beat frequency.
	b-f-o	beat-frequency oscillator.
	l-f	low-frequency (band)
	m-f	medium-frequency (band)
	h-f	high-frequency (band).
	v-h-f	very-high-frequency (band)
	u-h-f	ultra-high-frequency (band).
Miscellaneous	c-w	continuous wave.
	a-m	amplitude modulation.
	f-m	frequency modulation.
	a-v-c	automatic volume control.
	d-a-v-c	delayed automatic volume control.
	e-m-f	electromotive force (in volts).
	m-o-p-a	master-oscillator power-amplifier.

APPENDIX II

GLOSSARY OF RADIO TERMS

Absorption. The loss of radiated energy due to dissipation in a conducting medium.

Acceptor circuit. A series-resonant circuit.

Align. The process of adjusting the tuned circuits of a receiver or transmitter for maximum signal response.

Alternation. One-half of a complete cycle.

Ammeter. An instrument for measuring the electron flow in amperes.

Ampere. The basic unit of current flow; a current of one ampere will flow through a conductor having a resistance of one ohm, when a potential of one volt is applied.

Amplification. The process of increasing the strength of a signal.

Amplification factor. The ratio of a small change in plate voltage to a small change in control-electrode (grid) voltage required to produce the same small change in plate current, with all other electrode voltages and currents constant. It is a measure of the effectiveness of the control-electrode voltage to that of the plate voltage, upon the plate current.

Amplifier. A device used to increase the signal voltage, current, or power, generally made up of a vacuum tube and associated circuit called a stage. It may contain several stages in order to obtain a desired gain.

Amplitude. The maximum instantaneous value of an alternating voltage or current, measured in either the positive or negative direction.

Amplitude distortion. The changing of a waveshape so that it is no longer proportional to its original form. Also known as harmonic distortion.

Amplitude modulation. The process of changing the amplitude of an r-f carrier wave in accordance with the variations of an a-f wave.

Anode. A positive electrode; the plate of a vacuum tube.

Antenna. A conductor or system of conductors used to send out or pick up radio waves.

Antiresonant circuit. A parallel-resonant circuit.

Atom. The smallest particle of an elementary substance. It consists of one or more positive protons surrounded by such a number of electrons as will balance the positive charge.

Attenuation. The reduction in the strength of a signal.

Audible. Capable of being heard; a signal or vibrational disturbance of audio frequency and of sufficient strength to be heard.

Audio amplifier. Any device that amplifies a-f signals.

Audio component. That portion of any wave or signal whose frequencies are within the audible range.

Audio frequency. A frequency which can be detected as a sound by the human ear. The range of audio frequencies extends approximately from 20 to 20,000 cycles per second.

Audio-frequency choke. A coil used to impede the flow of a-f currents; generally a coil wound on an iron core.

Audio-frequency transformer. An iron-core transformer designed to transfer a-f signals from one circuit to another.

Autodyne circuit. A circuit in which the same elements and vacuum tube are used as an oscillator and a detector. The output has a frequency equal to the difference between the frequencies of the received signal and the oscillator signal.

Autotransformer. A transformer having one continuous winding, parts of which are used for both the primary and the secondary coils.

Automatic volume control. A method of automatically regulating the gain of a receiver so that the output tends to remain constant though the incoming signal may vary in strength.

Average value. The value obtained by multiplying the peak value of one alternation of a sine wave by 0.636.

Balanced circuit. A divided circuit in which both sides are electrically equal.

Balanced modulator. An amplifier in which the tube control grids are connected for parallel operation, the screen grids for push-pull operation (used as injector grids), and the plates for operation in push-pull. In its use in f-m transmitters, the original oscillator signal is applied to the control grids and the modulating signal to the screen grids. The output is a signal of the same frequency as the oscillator, either in phase or 180° out of phase with it, and with an amplitude which depends upon the amplitude of the modulating signal.

Ballast resistance. A self-regulating resistance, usually connected in the primary circuit of a power transformer to compensate for variations in the line voltage.

Ballast tube. A tube which contains a ballast resistance.

Band of frequencies. The frequencies existing between two definite limits.

Band-pass filter. A circuit designed to pass currents of frequencies within a definite band with nearly equal response, and reduce substantially the amplitudes of currents of all frequencies outside of that band.

Band spread. The process of spreading a narrow band of frequencies

over a large portion of the tuning dial, either by mechanical or electrical means.

Beam-power tube. A tetrode or pentode in which the electron stream is directed to flow in concentrated beams from the cathode to the plate.

Beat frequency. A frequency resulting from combining two different frequencies. It is numerically equal to the difference between these two frequencies.

Beat-frequency oscillator. An oscillator used to generate a local signal which, when combined with an incoming r-f signal, results in a beat frequency that is audible. Used for c-w reception in superheterodyne receivers, or as an instrument for test purposes.

Beat note. See *Beat frequency.*

Bias. The d-c voltage maintained between two elements of a vacuum tube. Unless otherwise specified, it refers to the d-c voltage between the control grid and the cathode.

Biasing resistor. A resistance used to provide the voltage drop for a required bias.

Bleeder. A resistance connected in parallel with a power-supply output to protect equipment from excessive voltages, should the load be removed or substantially reduced to improve the voltage regulation, and to drain the charge remaining in the filter capacitors when the unit is turned off. Also used as a voltage divider in some cases.

Blocked-grid keying. A method used to key a c-w transmitter in which the grid bias is highly negative when the key is open, thus blocking the tube and preventing the flow of plate current.

Blocking capacitor. A capacitor used to block the flow of direct current while permitting alternating current to pass.

Break-down voltage. The voltage at which an insulator or dielectric ruptures; or the voltage at which ionization and conduction begin in a gas or vapor.

Buffer amplifier. An amplifier used in a transmitter to isolate the oscillator from the effects produced by changes in voltage, changes in loading, or modulation in the following r-f amplifiers.

Bypass capacitor. A capacitor used to provide an alternating-current path of comparatively low impedance around a circuit element.

Capacitance. The ability to store electrical energy, measured in farads, microfarads, or micromicrofarads.

Capacitive coupling. A method of transferring energy from one circuit to another by means of a capacitor that is common to both circuits.

Capacitive feedback. The process of returning part of the energy of the plate (or output) circuit of a vacuum tube to the grid (or input) circuit by means of a capacitance common to both circuits.

Capacitive reactance. The opposition offered to the flow of an alternating current by capacitance, expressed in ohms. Its symbol is X_C.

Capacitor. Two electrodes, or sets of electrodes, in the form of plates, separated from each other by an insulating material, called the dielectric.

Capacitor-input filter. A filter which has a capacitor connected directly across (in parallel with) its input.

Carrier. See *Carrier wave.*

Carrier frequency. The frequency of an unmodulated carrier wave.

Carrier power. The power of an unmodulated carrier wave.

Carrier wave. The r-f component of a transmitted wave upon which an audio signal or other form of intelligence can be impressed.

Cathode. The electrode in a vacuum tube which provides electron emission.

Cathode bias. The method of biasing a tube by placing the biasing resistor in the common cathode-return circuit, making the cathode more positive, rather than the grid more negative, with respect to ground.

Cathode resistor. A resistance connected in the cathode circuit of a tube so that the voltage drop across it will supply the proper cathode-biasing voltage. See *Cathode bias.*

Center frequency. See *Resting frequency.*

Characteristic curve. A graph plotted to show the relation of changing values to each other. An example would be a curve showing how the plate current changes with variations in the grid voltage.

Choke. A coil used to impede the flow of pulsating direct current or alternating current by means of its self-inductance.

Choke-input filter. A filter which has a choke in series with the input, as distinguished from a capacitor-input filter.

Class A operation. Operation of a vacuum tube with grid bias such that the operating point is at or near the center of the straight portion of its I_P–E_G (plate-current grid-voltage) characteristic curve. Plate current flows throughout the entire operating cycle and distortion is kept to a minimum.

Class AB operation. Operation of a vacuum tube with grid bias such that the operating point is approximately half way between class *A* and class *B*.

Class AB_1. Class *AB* operation in which the input signal never exceeds the bias voltage, so that the grid is never driven positive and no grid current flows. The suffix "1" denotes no grid current flow.

Class AB_2. Class *AB* operation in which the input signal is greater than the bias voltage, driving the grid positive and causing grid current to flow. The suffix "2" denotes the flow of grid current.

Class B operation. Operation of a vacuum tube with grid bias at or very near cut-off, so that the operating point is at the lower bend of the I_P–E_G curve. The plate current is approximately zero with no input signal to the grid, and flows for approximately the positive half of each cycle of the input signal.

Class C operation. Operation of a vacuum tube with grid bias considerably greater than cut-off. The plate current is *zero* with no input signal to the grid, and flows for appreciably less than one-half of each cycle of the input signal.

Coaxial cable. A transmission line consisting of one conductor, usually a small copper tube or wire, within and insulated from another conductor of larger diameter, usually copper tubing or copper braid. The outer conductor may or may not be grounded. Radiation from this type of line is practically zero. Coaxial cable is sometimes called concentric line.

Code. A system of dots and dashes used for communication by radio or wire telegraphy.

Coefficient of coupling. A numerical indicator of the degree of coupling existing between two circuits, expressed in terms of either a decimal or a percentage.

Condenser. See *Capacitor.* (The term *condenser* is not approved for Signal Corps usage.

Conductance. The ability of a material to conduct or carry an electric current. It is the reciprocal (opposite) of the resistance of the material, and is expressed in mhos.

Continuous waves. Radio waves which maintain a constant amplitude and a constant frequency, abbreviated c-w.

Control grid. The electrode of a vacuum tube upon which the signal voltage is impressed in order to control the plate current.

Control-grid bias. See *Bias.*

Control-grid-plate transconductance. The ratio of the amplification factor of a vacuum tube to its plate resistance, combining the effects of both into one term. Its symbol is G_M, and is expressed in mhos or micromhos. It is sometimes called mutual conductance or simply transconductance.

Conversion gain. The ratio of the i-f output voltage to the input signal voltage of the first detector of a superheterodyne receiver.

Conversion transconductance. A characteristic associated with the mixer function of vacuum tubes, and used in the same manner as *mutual conductance,* is used. It is the ratio of the i-f current in the primary of the first i-f transformer to the r-f signal voltage producing it. Its symbol is G_C.

Converter tube. A multi-element vacuum tube used both as a detector and oscillator in a superheterodyne receiver. It creates a local frequency and combines it with an incoming signal to produce an intermediate frequency.

Counterpoise. A conductor or system of conductors used as a substitute for ground in an antenna system.

Coupled impedance. The effect produced in the primary winding of

a transformer by the influence of the current flowing in the secondary winding.

Coupling. The association of two circuits in such a way that energy may be transferred from one to the other.

Coupling capacitor. Any capacitor used to couple two circuits together. Coupling is accomplished by means of capacitive reactance common to both circuits.

Coupling element. The means by which energy is transferred from one circuit to another; the common impedance necessary for coupling.

Coupling transformer. A transformer used to couple two circuits by means of its mutual inductance.

Critical coupling. The degree of coupling which provides the maximum transfer of energy at a given resonant frequency. It is also called optimum coupling.

Cross modulation. A type of cross talk in which the carrier frequency being received is interfered with by an adjacent carrier, so that the modulated signals of both are heard at the same time.

Crystal. A natural substance, such as quartz or tourmaline, which is capable of producing a voltage stress when under pressure, or producing pressure when under an applied voltage. Under stress, it has the property of responding only to a given frequency when cut to a given thickness. It is therefore a valuable medium to control the frequency of radio transmitters.

Crystal control. Control of the frequency of an oscillator by means of a specially designed and cut crystal.

Crystal oscillator. An oscillator circuit in which a crystal is used to control the frequency and to reduce frequency instability to a minimum.

Crystal oven. A container maintained at a constant temperature in which a crystal and its holder are inclosed in order to reduce frequency drift.

Current. The rate of flow of electrons, expressed in amperes.

Cut-off. The minimum value of negative grid bias which cuts off, or stops, the flow of plate current. With a constant plate voltage and no signal, decreasing the bias from the cut-off value will permit the plate current to flow again, while increasing it to or beyond the cut-off point keeps the plate current at zero.

Cycle. One complete positive alternation and one complete negative alternation of an alternating current.

Damped waves. Waves which steadily decrease in amplitude.

Decibel. The standard unit of comparison between two quantities of electrical or acoustical power.

Decoupling network. A network of capacitors and chokes, or re-

sistors, placed in leads which are common to two or more circuits to prevent unwanted and harmful interstage coupling.

Degeneration. The process whereby a part of the output power of an amplifying device is returned to its input circuit in such a manner that it tends to cancel the input.

Demodulation. See *Detection.*

Detection. The process of recovering the audio component (audible signal) from a modulated r-f carrier wave.

Detector circuit. That portion of a receiver which recovers the audible signal from the modulated r-f carrier wave.

Deviation. A term used in frequency modulation to indicate the amount by which the carrier or resting frequency increases or decreases when modulated. It is usually expressed in kilocycles.

Deviation ratio. A term used in frequency modulation to indicate the ratio of the maximum amount of deviation of a fully modulated carrier to the highest audio frequency being transmitted.

Dielectric. An insulator. A term applied to the insulating material between the plates of a capacitor.

Dielectric constant. A numerical indicator of the capacitive value of a substance. It is the ratio of the capacitance of a capacitor using that substance as a dielectric to its capacitance if the dielectric is dry air or a vacuum.

Diode. A two-electrode vacuum tube containing a cathode and a plate.

Diode detector. A detector circuit employing a diode tube.

Directly heated cathode. A filament cathode which carries its own heating current for electron emission, as distinguished from an indirectly heated cathode.

Discriminator. A vacuum-tube circuit whose output voltage varies in amplitude and polarity in accordance with the frequency of the applied signal. Its principal uses are as a detector in an f-m receiver and as an automatic frequency-controlling device.

Distortion. Distortion is said to exist when an output waveform is not a true reproduction of the input waveform. Distortion may consist of irregularities in amplitude, frequency, or phase.

Distributed capacitance. The capacitance that exists between the turns in a coil or choke, or between adjacent conductors or circuits, as distinguished from the capacitance which is concentrated in a capacitor.

Distributed inductance. The inductance which exists along the entire length of a conductor, as distinguished from the self-inductance concentrated in a coil.

Driver. An amplifier used to excite the final power-amplifier stage of a transmitter or receiver.

Dropping resistor. A resistor used to decrease a given voltage to a lower value.

Dry electrolytic capacitor. An electrolytic capacitor using a paste instead of a liquid electrolyte. See *Electrolytic capacitor.*

Dynamic characteristics. The characteristics of a vacuum tube during operation.

Effective value. The equivalent heating value of an alternating current, or voltage, as compared to direct current, or voltage. It is 0.707 times the peak value of a sine wave. It is also the *rms* value.

Efficiency. The ratio of output to input power, generally expressed as a percentage.

Electric field. A space in which an electric charge will experience a force exerted upon it.

Electrical axis. The X-axis of a crystal.

Electrode. A terminal at which electricity passes from one medium into another. Examples of electrodes are the individual elements of a vacuum tube, the plates of battery cells, or the plates of capacitors.

Electrolyte. A chemical compound, either liquid or pastelike, whose chemical action causes a current flow, or in which a chemical reaction is caused by the flow of a current. Examples of electrolytes are the liquid solution used in storage cells, or the pastelike compound used in dry cells or in dry electrolytic capacitors.

Electrolytic capacitor. A capacitor employing a set of plates immersed in an electrolytic solution. Chemical action forms a very thin dielectric film on the anode plates, insulating them from the electrolyte, which then becomes the other electrode of the capacitor.

Electromagnetic field. The field of influence which an electric current produces around the conductor through which it flows.

Electron. The smallest charge of electricity. It is *always* negative.

Electron emission. The liberation of electrons from a body into space under the influence of heat, light, impact, chemical disintegration, or a potential difference.

Electrostatic field. The field of influence between two charged bodies.

Equivalent circuit. A diagrammatic arrangement of coils, resistors, and capacitors, representing the effects of a more complicated circuit in order to permit easier analysis.

Excitation. The electrical energy which, when applied to a device, causes that device to produce an effect. Examples of excitation are the r-f voltage applied to a control grid of a vacuum tube, the r-f voltage applied to an oscillating crystal, the r-f impulses applied to a tuned circuit, or the voltage applied to the field winding of a dynamotor.

Fading. Variations in the strength of a radio signal at the point of reception.

Farad. The unit of capacitance. One farad would be too large a

unit for practical purposes; therefore, microfarad and micromicrofarad are the units most frequently used.

Feedback. A transfer of energy from the output circuit of a device back of its input.

Fidelity. The degree of accuracy with which a system, or portion of a system, reproduces in its output the signal which is impressed on its input.

Field. The space in which electrostatic or magnetic lines of force exist.

Field intensity. Electrical strength of a field, measured in terms of microvolts per meter. The voltage the field is capable of inducing in an antenna one meter in length.

Filament. See *Directly heated cathode.*

Filter. A combination of resistances, inductances, and capacitances, or any one or two of these, which allows the comparatively free flow of certain frequencies or of direct current, while blocking the passage of other frequencies. An example is the filter used in a power supply, which allows the direct current to pass, but *filters* out the ripple.

Filter capacitor. A capacitor that is used in a filter circuit.

Filter choke. A choke that is used in a filter circuit.

First detector. The vacuum tube in a superheterodyne receiver in whose circuit the signal being received and the local-oscillator signal are combined to produce the i-f signal. It is also called the mixer.

Fixed bias. A bias voltage of constant value, as one obtained from batteries, a power supply, or a generator.

Fixed capacitor. A capacitor which has no provisions for varying its capacitance.

Fixed resistor. A resistor which has no provisions for varying its resistance.

Free electrons. Electrons which are not bound to a particular atom, but move continuously about among the many atoms of a substance.

Free oscillations. Oscillatory currents which continue to flow in a tuned circuit after the impressed voltage has been removed. Their frequency is the resonant frequency of the tuned circuit.

Frequency. The number of complete cycles per second existing in any form of wave motion; as the number of cycles per second of an alternating current, or sound wave.

Frequency deviation. See *Deviation.*

Frequency distortion. Distortion which occurs as a result of failure to amplify or attenuate equally all frequencies present in a complex wave.

Frequency doubler. An amplifier whose output circuit is resonant to the second harmonic of the input signal. The output frequency is double that of the input.

Frequency meter. The same device as a wavemeter, except that it is calibrated to indicate frequency.

Frequency modulation. The process of varying the frequency of an r-f carrier wave in accordance with the amplitude and frequency of an audio signal.

Frequency multiplier. An amplifier circuit which amplifies a harmonic. Its output frequency is some multiple of the original frequency.

Frequency-response curve. A graphical representation of the manner in which a circuit responds to different frequencies within its operating range.

Frequency stability. The ability of an oscillator to maintain its operation at a constant frequency.

Frequency tripler. An amplifier whose output circuit is resonant to the third harmonic of the input signal. The output frequency is three times that of the input.

Full-wave rectifier circuit. A circuit which utilizes both the positive and the negative alternations of an alternating current to produce a direct current. It may employ a double-diode rectifier tube or two separate diode rectifier tubes, or other unidirectional devices, such as copper-oxide elements.

Full-wave rectifier tube. A tube containing two sets of rectifying elements for full-wave rectification (double-diode).

Gain. The ratio of the output power, voltage, or current to the input power, voltage, or current.

Ganged tuning. Simultaneous tuning of two or more circuits by a single mechanical control.

Gas tube. A tube possessing certain desirable characteristics as a result of the presence of gas at low pressure.

Grid bias. The d-c voltage applied between the grid and the cathode.

Grid capacitor. A small capacitor in parallel with the grid resistor and in series with the grid lead in the grid circuit of a vacuum tube.

Grid current. Current which flows between the cathode and the grid whenever the grid becomes positive with respect to the cathode.

Grid detection. Detection by rectification in the grid circuit of a detector.

Grid leak. A resistor placed in the grid circuit of a vacuum tube to provide a path to the cathode for the negative charge on the grid, thus providing bias voltage on the grid during both halves of the signal cycle.

Grid-leak detection. See *Grid detection.*

Grid modulation. Modulating an r-f carrier by varying the grid bias of an amplifier in accordance with the audio signal.

Grid resistor. A general term used to denote any resistor in the grid circuit.

Grid return. The external conducting path for the return of grid current to the cathode.

Grid suppressor. A resistor occasionally connected between the

control grid and the tuned circuit to prevent undesired oscillations. Not to be confused with suppressor grid.

Ground. A metallic connection with the earth to establish ground potential. Also, a common return to a point of zero r-f potential, such as the chassis of a receiver or a transmitter.

Ground wave. That portion of the transmitted radio wave that travels near the surface of the earth.

Half-wave rectification. The process of rectifying an alternating current wherein only one-half of the input cycle is passed, the other half being blocked by the action of the rectifier, thus producing pulsating direct current.

Harmonic. An integral multiple of a fundamental frequency. (The second harmonic is twice the frequency of the fundamental.)

Harmonic distortion. Same as amplitude distortion.

Heater. The tube element used to heat an indirectly heated cathode.

Henry. The basic unit of measurement of inductions. Abbreviated h.

Hertz antenna. An antenna system in which the ground is not an essential part. Its resonant frequency depends upon its distributed capacitance and inductance, which are determined by its physical length. (Compare with Marconi antenna.)

Heterodyne. The action between two alternating currents of different frequencies in the same circuit; they are alternately additive and subtractive, thus producing two beat frequencies which are the sum of, and difference between, the two original frequencies.

Heaviside layer. See *Ionosphere.*

High fidelity. The ability to reproduce all audio frequencies between 50 and 10,000 cycles per second, without serious distortion.

High-frequency resistance. The resistance presented to the flow of h-f currents. See *Skin effect* and *Radio-frequency resistance.*

High-level modulation. High-level modulation is modulation produced at a point in a system where the power level approximates that at the output of the system. It is also called plate modulation.

Image frequency. The carrier frequency of an undesired signal which is capable of combining with the frequency of the local oscillator in a superheterodyne, thus forming the intermediate frequency, and eventually being reproduced together with the desired signal. For example, if the intermediate frequency is 500 kilocycles, a locally generated signal of 5,500 kilocycles, combined with signals of either 5,000 or 6,000 kilocycles would result in the proper intermediate frequency. If the 5,000-kilocycle signal is the desired one, the 6,000-kilocycle is the image frequency.

Impedance. The total opposition offered to the flow of an alternating current. It may consist of any combination of resistance, inductive

reactance, or capacitive reactance. It is expressed in ohms, and its symbol is Z.

Impedance coil. A coil primarily used to impede the flow of alternating current by its inductive reactance. See *Choke coil.*

Impedance coupling. The use of a tuned circuit or an impedance coil as the common coupling element between two circuits.

Impulse. Any force acting over a comparatively short period of time. An example would be a momentary rise in voltage.

Indirectly heated cathode. A cathode which is brought to the temperature necessary for electron emission by a separate heater element. Compare with *directly heated cathode.*

Inductance. The property of a circuit which tends to oppose a change in the existing current and is present only when the current is changing. Its symbol is L and its unit of measure is the henry (abbreviated h).

Induction. The act or process of producing voltage by the relative motion of a magnetic field and a conductor.

Inductive feedback. The transfer of energy from the plate circuit to the grid circuit of a vacuum tube by means of induction.

Inductive reactance. The opposition to the flow of alternating or pulsating current due to the inductance of a circuit. It is measured in ohms, and its symbol is X_L.

Inductor. A circuit element designed so that its inductance is its most important electrical property; a coil.

In phase. The condition that exists when two waves of the same frequency pass through their maximum and minimum values of like polarity at the same instant.

Instantaneous value. The magnitude at any particular instant when a value is continually varying with respect to time.

Intelligence. The message or information conveyed, as by a modulated radio wave.

Intensity. The relative strength of electric, magnetic, or vibrational energy.

Interelectrode capacitance. The capacitance existing between the electrodes in a vacuum tube.

Intermediate frequency. The fixed frequency to which all r-f carrier waves are converted in a superheterodyne receiver.

Intermediate-frequency transformer. A transformer designed to respond most efficiently to a wave of a given intermediate frequency.

Interrupter. A device for breaking up a continuous flow of current into pulses, so that they may be stepped up or down by transformer action.

Inverse peak voltage. The highest negative voltage reached between a rectifier-tube plate and its cathode.

Ion. An atom which has lost one or more electrons and is therefore positively charged.

Ionization. The breaking up of atoms into ions.

Ionosphere. Highly ionized layers of atmosphere from between 70 and 250 miles above the surface of the earth.

K. A symbol used to denote a constant, as, for example, dielectric constant. It is also used to represent a cathode.

Key. A special form of switch capable of rapid operation, used to form the dots and dashes of code signals.

Kilo. A prefix meaning one thousand.

Kilocycle. One thousand cycles per second.

Lag. The amount one wave is behind another in time, expressed in electrical degrees. When two waves are out of phase, the one that reaches maximum or zero amplitude after the other is said to lag.

LC. The product of the inductance and capacitance in a tuned circuit. A value which remains constant for a given frequency.

L/C. The ratio of inductance to capacitance.

Lead. The opposite of *lag.* Also a term given to a wire or connection.

Leakage. The electrical loss due to poor insulation.

Level. Refers to either low-level or high-level modulation.

Limiter. That part of an f-m receiver which eliminates all variations in carrier amplitude, thus removing all noise present in the carrier as amplitude modulation.

Linear. Having an output which varies in direct proportion to its input.

Load. The output power required, or the impedance through which energy is being supplied.

Loading coil. A coil inserted in a circuit to increase the total inductance without providing coupling with another circuit.

Local oscillator. The oscillator used in a superheterodyne receiver whose output is heterodyned with the desired r-f carrier to form the intermediate frequency.

Loop antenna. An antenna consisting of one or more complete turns of wire, designed for directional transmission or reception.

Loose coupling. Less than optimum coupling. Coupling providing little transfer of energy.

Loudspeaker. A device which converts a-f electrical impulses to relatively strong sound impulses.

Low-level modulation. Low-level modulation is modulation produced at a point in a system where the power level is low compared with the power level at the output of the system.

Magnet. A magnetic material possessing the property of attracting other magnetic substances, or of repelling them, if of like polarity.

Magnetic circuit. The complete path of magnetic lines of force.

Magnetic field. The space in which a magnetic force exists.

Marconi antenna. An antenna system of which the ground is an essential part, as distinguished from a Hertz antenna.

Master-oscillator power amplifier. A transmitter using an oscillator followed by one or more stages of r-f amplification.

Matched impedance. The condition which exists when two coupled circuits are adjusted so that the impedance of one circuit equals the impedance of the other.

Maximum undistorted power. The maximum power obtainable with less than 5 percent mean effective distortion.

Mechanical axis. The Y-axis of a crystal.

Meg. A prefix indicating one million.

Megohm. One million ohms.

Mho. The unit of conductance. It is equal to the reciprocal of resistance.

Micro. A prefix indicating one-millionth.

Microfarad. One-millionth of a farad.

Microphone. A device for converting sound energy into electrical energy.

Milli. A prefix indicating one-thousandth.

Milliampere. One-thousandth of an ampere.

Mixer. A vacuum tube and suitable circuit used to combine the incoming and local-oscillator frequencies to produce an intermediate frequency. See *First detector.*

Modulated amplifier. The amplifier stage of a transmitter in which the r-f carrier is electrically varied or modulated in accordance with another signal such as voice, tone, or visual signals (television).

Modulated carrier. An r-f carrier whose amplitude or frequency has been varied in accordance with the intelligence to be conveyed.

Modulation. The process of varying the amplitude or the frequency of a carrier wave in accordance with other signals in order to convey intelligence. The modulating signal may be an audio-frequency signal, video signal (as in television), or even electrical pulses or tones to operate relays, etc.

Modulator. That part of a transmitter which supplies the modulating signal to the modulated circuit, where it can act upon the carrier wave.

Molecule. The smallest known particle of any compound or element which still retains the chemical and physical properties of that material.

Multi-electrode tube. A vacuum tube containing more than three electrodes associated with a single electron stream.

Multi-unit tube. A vacuum tube containing within one glass or

metal envelope two or more groups of electrodes each associated with separate electron streams.

Mutual conductance. See *Control-grid-plate transconductance.*

Mutual inductance. A circuit property existing when the relative positions of two inductances cause the magnetic lines of force from one inductance to link with the turns of the other inductance.

Mutual-inductive coupling. Coupling of two circuits by means of their mutual inductance.

Neon bulb. A glass bulb containing two electrodes in neon gas at low pressure. When a voltage equal to or greater than its breakdown voltage is applied, ionization takes place and a pink glow appears.

Network. Any electrical circuit containing two or more interconnected elements.

Neutralization. The process of nullifying the voltage fed back through the interelectrode capacitance of an amplifier tube, by providing an equal voltage of opposite phase. Generally necessary only with triode tubes.

Neutralizing voltage. The voltage developed in the plate circuit (Hazeltine neutralization) or in the grid circuit (Rice neutralization), used to nullify or cancel the feedback through the tube.

Node. A zero point. Specifically, a *current node* is a point of zero current, while a *voltage node* is a point of zero voltage.

Noninductive capacitor. A capacitor so designed and constructed that the inductive effects within it are reduced to a minimum.

Noninductive circuit. A circuit in which the inductance is reduced to a minimum or is of negligible value.

Nonlinear. Having an output which does not vary in direct proportion to its input.

Ohm. The unit of electrical resistance.

Ohmic resistance. Resistance to the flow of direct current.

Ohm's Law. A fundamental law of electricity. It expresses the definite relationship existing between the voltage E, the current I, and the resistance R: $E = I \times R$.

Open circuit. A circuit which does not provide a complete path for the flow of current.

Optical axis. The Z-axis of a crystal.

Optimum coupling. See *Critical coupling.*

Oscillations. See *Free oscillations.*

Oscillator. A circuit generally using a vacuum tube capable of converting direct current into alternating current of a frequency determined by the inductive and capacitive constants of the circuit.

Oscillatory current. A current whose direction of flow periodically

reverses as a result of a balance between the inductance and capacitance in the circuit through which it flows.

Oscillograph. See *Oscilloscope.*

Oscilloscope. An instrument for showing visually graphical representations of the waveforms encountered in electrical circuits.

Output. The energy delivered by a device or circuit, such as a radio receiver or transmitter.

Output transformer. A transformer used to couple the plate circuit of a power tube, or tubes, to a load, such as a loudspeaker.

Overload. A load greater than the rated load of an electrical device.

Over-modulation. More than 100-percent modulation. In amplitude modulation, over-modulation produces positive peaks of more than twice the carrier's original amplitude and brings about complete stoppage of the carrier on negative peaks, thus causing distortion.

Padder capacitor. An adjustable capacitor used in conjunction with a main tuning capacitor when ganged tuning of several stages is employed. Its purpose is to permit adjustments for proper tracking of a local oscillator.

Parallel circuit. Two or more electrical devices so connected that the line current may divide between them. Also called a shunt circuit.

Parallel feed. Application of the d-c voltage to the plate or grid of a tube in parallel with the a-c circuit, so that the d-c and the a-c components flow in separate paths. Also called shunt feed.

Parallel-resonant circuit. A resonant circuit in which the applied voltage is connected across a parallel circuit formed by a capacitor and an inductor.

Peak plate current. The maximum instantaneous plate current passing through a tube.

Peak value. The maximum instantaneous value of a varying current, voltage, or power. It is equal to 1.414 times the effective value of a sine wave.

Pentode. A five-electrode vacuum tube containing a cathode, control grid, screen grid, suppressor grid, and plate.

Percentage modulation. A measure of the degree of change in a carrier wave caused by the modulating signal, expressed as a percentage.

Phasing capacitor. A small capacitor used in a crystal-filter circuit to neutralize the capacity of the crystal holder.

Phase difference. The time electrical degrees one wave leads or lags another.

Piezo-electric effect. Effect of producing a voltage by placing a stress, either by compression and expansion, or by twisting, on a crystal; and conversely, producing a stress in a crystal by applying a voltage to it.

Plate. The principal electrode in a tube to which the electron stream is attracted. See *Anode.*

Plate circuit. All the circuit elements connected externally between the plate and the cathode of a vacuum tube.

Plate current. Current flowing in the plate circuit between the plate and the cathode of a vacuum tube.

Plate detection. The operation of a vacuum-tube detector at or near plate current cut-off, so that rectification of the input signal is accomplished in the plate circuit.

Plate dissipation. Power in watts used up at the plate in the form of heat.

Plate efficiency. The ratio of the a-c power output from a tube to the average d-c power supplied to the plate circuit.

Plate impedance. See *Plate resistance.*

Plate keying. Keying a radiotelegraph transmitter by interrupting the flow of plate current in the plate circuit.

Plate-load impedance. The impedance in the plate circuit across which the output-signal voltage is developed by the alternating component of the plate current.

Plate modulation. Modulation of a class *C* r-f amplifier by varying the plate voltage in accordance with the audio signal.

Plate resistance. The internal resistance to the flow of alternating current between the cathode and plate of a tube. It is equal to a small change in plate voltage divided by the corresponding change in plate current, and is expressed in ohms. It is also called a-c resistance, internal impedance, plate impedance, and dynamic plate impedance. Its symbol is r_p.

Plate voltage. The d-c potential applied between the plate and cathode of a tube.

Potential difference. The voltage existing between two points. An example would be a voltage drop across an impedance from one end to another.

Potentiometer. A variable voltage divider. A resistor which has a variable contact arm so that any portion of the potential applied between its ends may be obtained.

Power. The rate of doing work or the rate of expending energy. The basic unit of electrical power is the watt.

Power amplification. The process of amplifying a signal to produce a gain in power as distinguished from voltage amplification. The gain is the ratio of the alternating power output to the alternating power input of an amplifier.

Power amplifier. An amplifier designed to produce a gain in signal power, as distinguished from a voltage amplifier.

Power detector. Any detector tube operating with plate voltage sufficiently high to allow handling of strong input signals without appreciable distortion.

Power factor. In alternating or pulsating current the ratio of the actual power as measured by a wattmeter, to the apparent power as indicated by ammeter and voltmeter readings. For an inductor, capacitor, or insulator, it is an expression of the losses.

Power pack. An apparatus which adapts the available power to the needs of vacuum-tube plate, grid, and heater circuits in receivers and transmitters.

Power transformer. A transformer used to change a supply voltage to the various higher and lower values required for vacuum-tube plate, heater, and bias circuits.

Power tube. A vacuum tube designed to handle a greater amount of power than the ordinary voltage-amplifying tube.

Power unit. See *Power pack.*

Primary circuit. The first, in electrical order, of two or more coupled circuits, wherein a change in current flow will induce a voltage in the other, or secondary, circuits.

Primary emission. The emission of electrons due to primary causes, such as the heating of a cathode, and not to secondary effects, such as electron bombardment.

Propagation. See *Wave propagation.*

Proton. The positive particles of an atom. The smallest quantity of positive electricity which can exist in a free state; associated with electrons, it makes up the atom.

Pulsating current. A direct current which increases and decreases in value.

Push-pull amplifier. Two vacuum tubes whose grids are excited with equal voltages 180° out of phase, and whose plate outputs are combined by means of a center-tapped output circuit.

Push-push doubler. An amplifier used for frequency doubling, consisting of two vacuum tubes with their grids (input) connected in push-pull and their plates (output) in push-push, or parallel.

Q. The symbol of merit or efficiency of a circuit or a coil. Numerically, it is equal to the inductive reactance divided by the resistance of a circuit or coil.

Quartz-crystal oscillator. A crystal-controlled oscillator in which the crystal is a plate of quartz. See *Crystal oscillator.*

Quench frequency. The number of times per second that a circuit is caused to go in and out of oscillation. See *Superregeneration.*

Radar. An electronic radio detection and ranging system employing microwaves and ultra-high frequencies for determining the azimuth location, height, speed and number of aircraft, and/or the location, speed, and number of water vessels.

Radiate. To send out energy into space; as in the case of r-f waves.

Radiation resistance. An arbitrary term used to express the power radiated by an antenna. It is that amount of resistance which, if inserted in the antenna at a point of maximum current, will consume the same amount of power that is radiated by the antenna.

Radio. The science of communication in which r-f waves are used to carry intelligence through space.

Radio channel. A band of adjacent frequencies of a width sufficient to permit its use for radio communication.

Radio frequency. Any frequency of electrical energy capable of propagation into space; r-f frequencies are normally much higher than those associated with sound waves.

Radio-frequency amplification. The amplification of a radio wave by a receiver before detection, or by a transmitter before radiation.

Radio-frequency choke. An air-core coil used to impede the flow of r-f currents.

Radio-frequency component. That portion of a signal or wave which consists of only the r-f alternations, and not including its audio rate of change in amplitude or frequency.

Radio-frequency resistance. The resistance offered by a conductor to the flow of a r-f current. (A conductor offers more resistance to h-f currents than to i-f or direct currents.) See *Skin effect.*

Radio-frequency transformer. A transformer designed to transfer r-f energy from one circuit to another. It may have either an air or small iron core, depending on the frequencies to be handled.

Ratio. The value obtained by dividing one number by another, indicating their relative proportions.

Reactance. The opposition offered to the flow of an alternating current due to the inductance, capacitance, or combination of both in any circuit. Its symbol is X.

Reactance coil. An inductive reactance used to oppose the flow of an alternating current. A choke coil.

Reactance-tube modulator. A modulator used in the Crosby system of frequency modulation, in which the modulator tube is made to act as a varying reactance in the oscillator circuit.

Reciprocal. The reciprocal of a quantity is 1 divided by that quantity.

Rectifier. A device used to change alternating current to unidirectional current (direct current).

Reflected impedance. See *Coupled impedance.*

Reflection. The turning back of a radio wave from the surface of the earth or the ionosphere.

Refraction. The bending, or change in the direction of a radio wave in passing into the ionosphere. This effect will turn the wave back to earth if the angle of attack is not too great.

Regeneration. The process whereby a part of the output power of an amplifying device is returned to its input circuit in such a manner

that it reinforces the grid excitation, thereby increasing the total amplification.

Reluctance. The opposition to magnetic flux.

Resistance. The opposition to the flow of current as determined by the nature and physical dimensions of a conductor.

Resistance coupling. A method of transferring energy from one circuit to another by means of resistance common to both circuits.

Resistor. A circuit element whose chief characteristic is resistance and which is used to oppose the flow of current.

Resonance. The condition existing in a circuit when the values of inductance, capacitance, and the applied frequency are such that the inductive reactance and capacitive reactance cancel each other.

Resonance curve. A graphical representation illustrating the manner in which a tuned circuit responds to the various frequencies in and near the resonant frequency.

Resting frequency. The initial frequency of the carrier wave of an f-m transmitter before modulation. Also called the *center frequency.*

Rheostat. A variable resistor.

Ripple voltage. The fluctuations in the output voltage of a rectifier, filter, or generator.

RMS. Abbreviation of root mean square. The effective value. In a sine wave, it is 0.707 times the maximum value.

Saturation. That condition in any circuit which exists when an increase in the actuating component produces no further change in the resultant effect.

Saturation current. The current produced in the plate circuit of a tube when all of the electrons emitted by the cathode pass to the plate. It is sometimes referred to as the emission current.

Saturation point. That point beyond which an increase in either the grid voltage, plate voltage, or both, produces no increase in the existing plate current.

Screen dissipation. Power given off in the form of heat by the screen grid as a result of bombardment by the electron stream.

Screen grid. An electrode placed between the control grid and the plate of a vacuum tube to reduce the interelectrode capacitance.

Screen-grid modulation. Modulation accomplished by introducing an audio voltage on the screen grid of the modulated tube.

Second detector. That portion of a superheterodyne receiver that separates the audio component from the modulated intermediate frequency.

Secondary. The output coil of a transformer. See *Primary.*

Secondary emission. Emission of electrons knocked loose from the plate or grid of a vacuum tube by the impact or bombardment of electrons arriving from the cathode.

Selectivity. The degree to which a receiver is capable of discriminating between signals of different carrier frequencies.

Self-bias. Biasing a tube by utilizing the voltage drop developed across a resistor through which either its plate or grid current flows.

Self-excited oscillator. An oscillator depending on its resonant circuits for frequency determination. See *Crystal oscillator.*

Self-induction. The action in which a counter electromotive force is produced in a conductor when the conductor's own magnetic field collapses and expands with a change in current flow.

Sensitivity. The degree of response of a radio circuit to signals of the frequency to which it is tuned.

Series circuit. The arrangement where two or more electrical devices are connected so that the total current must flow through each of them in turn.

Series feed. Application of the d-c voltage to the plate or grid of a tube through the same impedance in which the alternating current flows. See *Parallel feed.*

Series-resonant circuit. A resonant circuit in which the capacitor and the inductor are in series with the applied voltage.

Series resonance. The condition existing in a circuit when the source of emf is in series with an inductance and capacitance whose reactances cancel each other at the applied frequency, reducing the impedance to minimum.

Sharp tuning. Very high selectivity.

Shielding. Metallic covering used to prevent magnetic or electrostatic coupling between adjacent circuits.

Short circuit. A low impedance or zero impedance path between two points.

Short wave. Refers to radio operation on frequencies higher than those used for commercial broadcasting at the present time. The range of frequencies extending from 1,500 kilocycles to 30,000 kilocycles.

Shunt. Same as parallel. A parallel resistor placed in an ammeter to increase its range.

Shunt feed. Application of the d-c plate or grid voltage without passing through the a-c load impedance. See *Parallel feed.*

Side bands. The new frequencies, both above and below the carrier frequency, produced as a result of modulation of a carrier.

Side-band power. The power contained in the side bands. It is this power to which a receiver responds, not to the carrier power, when receiving a modulated wave.

Sine wave. A wave in which the amplitude varies as the sine of the angle; the waveform of a normal alternating current or voltage.

Sinusoidal. Having the form of a sine wave.

Skin effect. The tendency of h-f currents to flow near the surface of a conductor, thus being restricted to a small part of the total cross-

sectional area and producing the effect of increasing the resistance. See *Radio-frequency resistance.*

Skip distance. The distances on the earth's surface between the points where a radio sky wave is successively reflected between the earth and the ionosphere.

Skip zone. The space or region within the transmission range wherein signals from a transmitter are not received. It is the distance between the farthest point reached by the ground wave and the nearest point at which the refracted sky waves come back to earth.

Sky wave. That portion of a radiated wave which travels in space and is returned to earth by refraction in the ionosphere.

Soft tube. A vacuum tube whose characteristics have been adversely affected by the presence of gas in the tube. Not to be confused with those tubes designed to operate with some gas present within them.

Solenoid. An inductor wound in a manner to give high magnetic density. A coil with closely wound turns of many layers.

Space charge. The negative charge due to the cloud of electrons existing in the space between the cathode and plate in a vacuum tube, formed by the electrons emitted from the cathode in excess of those immediately attracted to the plate.

Space current. The total current flowing between the cathode and all the other electrodes in a tube. This includes the plate current, grid current, screen-grid current, and any other electrode current which may be present.

Speech amplifier. An a-f voltage amplifier for amplifying signals from a microphone.

Stability. Freedom from undesired variation.

Standing wave. The current and voltage waves present on a transmitting antenna, or on resonant feeders.

Static. Any electrical disturbance caused by atmospheric conditions. Also, a fixed, nonvarying condition; without motion.

Static characteristics. The characteristics of a tube taken with no output load and with d-c potentials applied to the grid and plate.

Superheterodyne. A receiver in which the incoming signal is mixed with a locally generated signal to produce an intermediate frequency which is then amplified and detected a second time to produce the audio frequency.

Superregeneration. A method used to produce greater regeneration than otherwise possible without the harmful effects of oscillation. See *Quench frequency.*

Suppressor. A resistor in the grid circuit used to reduce or prevent oscillation or the generation of unwanted r-f signals, such as those radiated from the spark plugs of a gasoline engine.

Suppressor grid. An electrode used in a vacuum tube to minimize

the harmful effects of secondary emission from the plate. Not to be confused with grid suppressor.

Surges. Sudden increases of current or voltage in a circuit.

Surge impedance. The characteristic impedance of a transmission line. When a transmission line is terminated in a load equal to its surge impedance, no reflection will occur and no standing waves will appear.

Sweep circuit. That part of a cathode-ray oscilloscope which provides a time-reference base.

Swing. The periodic variation in frequency or amplitude of an electrical quantity.

Swinging choke. A choke coil so designed that its effective inductance varies with the amount of current passing through it. It is used in power-supply filter circuits.

Switch. A device used to open or close an electrical circuit.

Symbol. A sign, mark, letter, or diagram used to represent a device or quantity.

Synchronous. Happening at the same time; having the same period and phase.

Tank circuit. A tuned circuit used in connection with a vacuum tube. It is so called because of its ability to store energy temporarily.

Temperature coefficient. A factor used to calculate the change in the characteristics of a substance, device, or circuit element, with changes in its temperature. Examples: the shift in frequency of a crystal per degree change in temperature; and the change in the resistance of a resistor per degree change in temperature.

Tetrode. A four-electrode vacuum tube containing a cathode, control grid, screen grid, and plate.

Thermionic emission. Electron emission obtained by heating an emitter.

Thermocouple ammeter. An ammeter which operates by means of a voltage produced by the heating effect of a current passed through the junction of two dissimilar metals. It is used for r-f measurements.

Thoriated filament. A vacuum-tube filament coated with thorium for better emission.

Thyratron. A trade name for a certain type of grid-controlled triode tube which contains gas.

Tight coupling. More than enough coupling to give maximum transfer of energy at the resonant frequency. Greater than optimum coupling.

Tone control. A method of emphasizing either low or high tones at will in an a-f amplifier.

Tone modulation. A type of code-signal transmission obtained by causing the r-f carrier amplitude to vary at a fixed audio frequency.

Tracking. The process of adjusting the individual tuning action of

each of several stages which are gang-tuned so that a given tuning change in the central control will result in an equal frequency change in each stage at any point over the tuning range.

Transconductance. See *Control-grid-plate transconductance.*

Transformer. Two or more coils, linked by magnetic lines of force, used to transfer energy from one circuit to another.

Transformer coupling. Coupling of circuits by means of a transformer.

Transmission line. Any conductor or system of conductors used to carry electrical energy from its source to a load.

Transposition blocks. Spreaders used to space and reverse at fixed intervals the relative position of two conductors.

Trimmer capacitor. A small variable capacitor used to adjust main tuning capacitors so that they will track properly.

Triode. A three-electrode vacuum tube, containing a cathode, control grid, and plate.

Tuned circuit. A resonant circuit.

Tuned feeders. A resonant feeder system. The length is critical.

Tuned filter. A resonant circuit connected between two circuits to prevent the passage of signals of its own resonant frequency.

Tuned-plate tuned-grid oscillator. A vacuum-tube oscillator which has resonant circuits in both its grid and plate circuits, with no inductive coupling between them.

Tuned radio-frequency amplifier. A tuned amplifier designed to operate at radio frequencies, and using resonant-circuit coupling.

Tuned radio-frequency transformer. A transformer used for selective coupling in r-f stages.

Tuning. The process of adjusting a radio circuit to resonance with the desired frequency.

Ultra-high frequency. Any frequency above 300 megacycles.

Undamped wave. A wave which has an unchanging amplitude.

Under-modulation. Insufficient modulation.

Unidirectional. Flowing in one direction only. A unidirectional current is direct current.

Unit. The measurement reference; one.

Vacuum. From a practical viewpoint, a condition where sufficient air has been removed from a container so that any remaining air will not affect the characteristics of the device beyond an allowable amount. Theoretically, a perfect vacuum is space from which all the air and gases have been removed; this is never attained in actual practice.

Vacuum tube. A device which consists of several electrodes in an evacuated enclosure, which operates on electronic principles.

Vacuum-tube characteristics. Data that show how a vacuum tube will operate under various electrical conditions.

Vacuum-tube rectifier. A tube which changes an alternating current to a unidirectional pulsating direct current.

Vacuum-tube voltmeter. A vacuum-tube system that uses either or both the amplifier and rectified characteristics of a vacuum tube to measure either d-c or a-c voltages. Its input impedance is very high, and the current used to actuate the meter movement is not taken from the circuit being measured. It can be used to obtain accurate measurements in sensitive circuits.

Variable capacitor. A capacitor whose capacitance may be continuously varied from maximum to minimum by mechanical means.

Variable-mu tube. A vacuum tube whose control grid is irregularly spaced, so that at different points within its operating range the grid exercises a different amount of control on the electron stream. This shifts the operating point from one section of its characteristic curve to another, thus changing the amplification factor.

Variable resistor. A resistor whose electrical value can be changed mechanically.

Variocoupler. Two independent inductors, so arranged mechanically that their mutual inductance (coupling) can be varied.

Variometer. A variocoupler having its two coils connected in series, and so mounted that the movable coil may be rotated within the fixed coil, thus changing the total inductance of the unit.

Vectors. Two or more lines whose relative length and direction are used in calculating the relations between their corresponding quantities.

Very high frequency. Generally, those frequencies from 30 to 300 megacycles.

Vibrator. A mechanical-electrical device used to change a continuous steady current into a pulsating current.

Vibrator power supply. A power supply using a vibrator to produce the varying current necessary to actuate a step-up transformer, the output of which is then rectified and filtered.

Volt. The basic unit of electrical pressure.

Voltage. A term used to signify electrical pressure.

Voltage amplification. The process of obtaining an increase in output voltage over the input-voltage value.

Voltage divider. A resistor which is connected across the output of a power source with mechanical provision for connecting the local load circuits in parallel across part or all of the resistor, thereby obtaining the desired voltage.

Voltage doubler. A method of increasing the voltage through rectification of both halves of a cycle and causing the outputs of each to be additive.

Voltage drop. The difference in voltage between two points. It is the

result of the loss of electrical pressure as a current flows through an impedance.

Voltage regulation. A measure of the degree to which a power source maintains its output-voltage stability under varying load conditions.

Volume. A term used to denote the sound intensity (amount of audio output) of a receiver or audio amplifier.

Volume control. A device for controlling the output volume.

Watt. The basic unit of electrical power.

Wave. When used loosely, it means an electrical impulse periodically changing in intensity and travelling through space. More accurately, it is the graphical representation of the intensity of that impulse over a period of time.

Waveform. The shape of the wave obtained when instantaneous values of a-c quantities are plotted against time in rectangular coordinates.

Wavelength. The distance in meters traveled by a wave during the time interval of one complete cycle. It is equal to the velocity divided by the frequency.

Wavemeter. A device which is calibrated to indicate the length in meters of the wave to which it is tuned.

Wave propagation. The radiation, as from an antenna, of r-f energy into space.

X. The symbol for reactance.

X_C. The symbol for capacitive reactance.

X_L. The symbol for inductive reactance.

X-cut crystal. A crystal so cut that its major flat surfaces are perpendicular to an electrical (X) axis of the original quartz crystal.

XY-cut crystal. A crystal so cut that its characteristics are between those of the X-cut and the Y-cut crystals. It has a very low temperature coefficient.

Y-cut crystal. A crystal so cut that its major flat surfaces are perpendicular to a mechanical (Y) axis of the original quartz crystal.

Z. The symbol for impedance.

Zero beat. The condition where two frequencies are exactly the same, and therefore produce no beat note.

Zero bias. A condition in which there is no potential difference between the control grid and the cathode.

Zero-bias tube. A vacuum tube which is so designed that it may be operated as a class B amplifier without applying a negative bias to its control grid. Examples of these are the VT–63 (commercial type 46) and the commercial types 838 and ZB–120.

APPENDIX III

SUMMARY OF FORMULAS

1. D-c Circuits

a. Ohm's Law. Amperes $= \frac{\text{Volts}}{\text{Ohms}}$ $\left(I = \frac{E}{R}\right)$

Volts $=$ Amperes $\times$ ohms $(E = I \times R)$

Ohms $= \frac{\text{Volts}}{\text{Amperes}}$ $\left(R = \frac{E}{I}\right)$

b. Power. Watts $=$ Volts $\times$ amperes $(P = E \times I)$.

c. Resistance in Series. $R_{\text{TOTAL}} = R_1 + R_2 + R_3 + \ldots\ldots$

d. Resistances in Parallel. $\frac{1}{R_{\text{EQUIV}}} = \frac{1}{R_1} + \frac{1}{R_2} + \frac{1}{R_3} + \frac{1}{R_4} + \frac{1}{R_5} + \ldots\ldots$

or:

$$R_{\text{EQUIV}} = \frac{1}{\frac{1}{R_1} + \frac{1}{R_2} + \frac{1}{R_3} + \frac{1}{R_4} + \frac{1}{R_5} \ldots\ldots}$$

e. Two Resistors in Parallel. $R_{\text{EQUIV}} = \frac{R_1 \times R_2}{R_1 + R_2}$.

2. A-c Circuits

a. Current, Voltage, Impedance. $E = I \times Z$; $I = \frac{E}{Z}$; $Z = \frac{E}{I}$.

b. Inductive Reactance. X_L (ohms) $= 2\pi f L$.

c. Capacitive Reactance. X_c (ohms) $= \frac{1}{2\pi f C}$.

d. Impedance. Z (ohms) $= \sqrt{R^2 + \left(2\pi f L - \frac{1}{2\pi f C}\right)^2}$.

e. Inductors in Series. $L_{\text{TOTAL}} = L_1 + L_2 + L_3 + \ldots\ldots$

f. Inductors in Parallel. $L_{\text{EQUIV}} = \frac{1}{\frac{1}{L_1} + \frac{1}{L_2} + \frac{1}{L_3} + \ldots\ldots}$

g. Capacitors in Series. $C_{\text{EQUIV}} = \frac{1}{\frac{1}{C_1} + \frac{1}{C_2} + \frac{1}{C_3} + \ldots\ldots}$

h. Capacitors in Parallel. $C_{TOTAL} = C_1 + C_2 + C_3 + \ldots$

i. Condition of Resonance. $X_L = X_C$

$$2\pi fL = \frac{1}{2\pi fC}.$$

j. Resonant Frequency of a Tuned Circuit.

$$f \text{ (cps)} = \frac{1}{2\pi\sqrt{LC}}.$$

3. Radio Frequency

Frequency and wavelength relations:

$$\text{Wavelength (in meters)} = \frac{300{,}000{,}000}{\text{Frequency (in cycles)}}$$

$$\text{Frequency (in cycles)} = \frac{300{,}000{,}000}{\text{Wavelength (in meters)}}$$

4. Horizon Distance

a. Horizon distance can be calculated from the formula:

$$S = 1.42\sqrt{H}$$

where S is the distance in miles and H is the height of observer's eyes in feet.

b. The table which follows gives the horizon distance for various heights of antenna above ground level.

Height of antenna above ground (feet)	Limit of optical range (miles)
5	3.2
20	6.4
50	10.0
100	14.2
500	32.0
1,000	45.0
2,000	63.5
3,000	78.0
5,000	100.0

APPENDIX IV

RMA RADIO COLOR CODES

1. General

Standard color codes have been adopted by the American Radio Manufacturers Association, and this accepted system of color coding makes easy the identification of the values and connections of standard components.

2. Resistors and Capacitors

a. For identification of small, carbon type resistors and midget mica capacitors, value numbers are represented by the following colors:

0	black	5	green
1	brown	6	blue
2	red	7	violet
3	orange	8	gray
4	yellow	9	white

Three colors are used on each resistor to identify its value. The body color represents the first figure of the resistance value; one end (or tip) is colored to represent the second figure, and a colored band or dot near the center of the resistor gives the number of zeros following the first two figures.

b. Small mica capacitors are similarly marked with three colored dots, with an arrow or other symbol indicating the sequence of colors. Readings are in micromicrofarads.

3. I-f Transformers

Leads on i-f (superheterodyne) transformers are colored as follows:

Blue ..... plate lead to tube.
Red ..... B+ lead (to power).
Green ..... grid (or diode) lead.
Black ..... grid (or diode) return.

4. A-f Transformers

Leads on a-f transformers (including also line-to-grid and tube-to-line transformers) are colored as follows:

Blue ..... plate (finish) lead of primary.
Red ..... B+ lead.
Brown ..... plate (start) lead of primary.
Green ..... grid (finish) lead to secondary.
Black ..... grid-return lead.
Yellow ..... grid (start) lead to secondary.

5. Loudspeaker Coils

a. Leads to voice coils are colored:

Green .....finish.
Black .....start.

b. Leads to field coils are colored:

Black and red .....start.
Yellow and red .....finish.
Slate and red .....tap (if any is used).

6. Power Transformers

Leads on power transformers are colored:

a. Primary leads .....black.

If tapped: Common ...black.

b. Secondary leads:

Tap .....black and yellow, striped.
Finish .....black and red, striped.
High-voltage plate
winding .....red.
Center tap .....red and yellow, striped.
Rectifier filament
winding .....yellow.
Center tap .....yellow and blue, striped.
Filament winding 1....green.
Filament winding 2....brown.
Filament winding 3....slate.

APPENDIX V

MULTIPLES AND SUBMULTIPLES

Ampere	=	1,000,000 microamperes
Ampere	=	1,000 milliamperes
Cycle	=	0.000,001 megacycle
Cycle	=	0.001 kilocycle
Farad	=	1,000,000,000,000 micro-microfarads
Farad	=	1,000,000 microfarads
Farad	=	1,000 millifarads
Henry	=	1,000,000 microhenrys
Henry	=	1,000 millihenrys
Kilocycle	=	1,000 cycles
Kilovolt	=	1,000 volts
Kilowatt	=	1,000 watts
Megacycle	=	1,000,000 cycles
Megohm	=	1,000,000 ohms
Mho	=	1,000,000 micromhos
Mho	=	1,000 millimhos
Microampere	=	0.000,001 ampere
Microfarad	=	0.000,001 farad
Microhenry	=	0.000,001 henry
Micromho	=	0.000,001 mho
Micro-ohm	=	0.000,001 ohm
Microvolt	=	0.000,001 volt
Microwatt	=	0.000,001 watt
Micromicrofarad	=	0.000,000,000,001 farad
Micromicro-ohm	=	0.000,000,000,001 ohm
Milliampere	=	0.001 ampere
Millihenry	=	0.001 henry
Millimho	=	0.001 mho
Millohm	=	0.001 ohm
Millivolt	=	0.001 volt
Milliwatt	=	0.001 watt
Volt	=	1,000,000 microvolts
Volt	=	1,000 millivolts
Watt	=	1,000,000 microwatts
Watt	=	1,000 milliwatts
Watt	=	0.001 kilowatt

METRIC PREFIXES

μ	$\frac{1}{1,000,000}$	One-millionth	micro-
m	$\frac{1}{1,000}$	One-thousandth	milli-
c	$\frac{1}{100}$	One-hundredth	centi-
d	$\frac{1}{10}$	One-tenth	deci-
	1	One	uni-
dk	10	Ten	deka-
h	100	One hundred	hekto-
k	1,000	One thousand	kilo-
M	1,000,000	One million	mega-

APPENDIX VI

KILOCYCLE-METER CONVERSION

1. General

a. There is an increasing tendency in radio practice to think and deal with radio waves in terms of *frequencies* in kilocycles, rather than in terms of wavelengths in meters. "Kilo" means a thousand, and "cycle" means one complete alternation. The number of kilocycles indicates the number of thousands of times that the rapidly alternating current in the antenna repeats its flow in either direction in one second.

b. The numerical relation between frequency and wavelength is given by the following rule (for approximate calculations):

$$\text{Frequency (in cycles per second)} = \frac{300{,}000{,}000}{\text{Wavelength (in meters)}}.$$

But for very accurate conversion, the factor 299,820,000 is used instead of 300,000,000; this rule is based on the fact that the velocity of radio waves in space has been very accurately computed to be 299,820,000 meters per second.

2. Table VIII

Table VIII gives accurate values of kilocycles (*not cycles*) corresponding to any number of meters, and vice versa. It is based on the factor 299,820,000, and gives values for every 10 kilocycles or every 10 meters. It should be particularly noticed that the table is entirely reversible; thus 50 kilocycles are equal to 5,996 meters, and vice versa. It is suggested that the student make frequent use of the table to accustom himself as quickly as possible to use of the term *kilocycles* in referring to frequencies of radio sets. Although wavelengths or corresponding frequencies can be calculated by the formulas given elsewhere in this manual, the use of this table eliminates laborious calculations and insures accuracy of results.

Table VIII. Kilocycles (kc) to Meters (m), or Meters to Kilocycles

[Columns are interchangeable]

kc or m	*m or kc*	*kc or m*	*m or kc*	*kc or m*	*m or kc*	*kc or m*	*m or kc*	*kc or m*	*m or kc*
10	29,982	510	587.9	1,010	296.9	1,510	198.6	2,010	149.2
20	14,991	520	576.6	1,020	293.9	1,520	197.2	2,020	148.4
30	9,994	530	565.7	1,030	291.1	1,530	196.0	2,030	147.7
40	7,496	540	555.2	1,040	288.3	1,540	194.7	2,040	147.0
50	5,996	550	545.1	1,050	285.5	1,550	193.4	2,050	146.3
60	4,997	560	535.4	1,060	282.8	1,560	192.2	2,060	145.5
70	4,283	570	526.0	1,070	280.2	1,570	191.0	2,070	144.8
80	3,748	580	516.9	1,080	277.6	1,580	189.8	2,080	144.1
90	3,331	590	508.2	1,090	275.1	1,590	188.6	2,090	143.5
100	2,998	600	499.7	1,100	272.6	1,600	187.4	2,100	142.8
110	2,726	610	491.5	1,110	270.1	1,610	186.2	2,110	142.1
120	3,499	620	483.6	1,120	267.7	1,620	185.1	2,120	141.4
130	2,306	630	475.9	1,130	265.3	1,630	183.9	2,130	140.8
140	2,142	640	468.5	1,140	263.0	1,640	182.8	2,140	140.1
150	1,999	650	461.3	1,150	260.7	1,650	181.7	2,150	139.5
160	1,874	660	454.3	1,160	258.5	1,660	180.6	2,160	138.8
170	1,764	670	447.5	1,170	256.3	1,670	179.5	2,170	138.1
180	1,666	680	440.9	1,180	254.1	1,680	178.5	2,180	137.5
190	1,578	690	434.5	1,190	252.0	1,690	177.4	2,190	136.9
200	1,499	700	428.3	1,200	249.9	1,700	176.4	2,200	136.3
210	1,428	710	422.3	1,210	247.8	1,710	175.3	2,210	135.7
220	1,363	720	416.4	1,220	245.8	1,720	174.3	2,220	135.1
230	1,304	730	410.7	1,230	243.8	1,730	173.3	2,230	134.4
240	1,249	740	405.2	1,240	241.8	1,740	172.3	2,240	133.8
250	1,199	750	399.8	1,250	239.9	1,750	171.3	2,250	133.3
260	1,153	760	394.5	1,260	238.0	1,760	170.4	2,260	132.7
270	1,110	770	389.4	1,270	236.1	1,770	169.4	2,270	132.1
280	1,071	780	384.4	1,280	234.2	1,780	168.4	2,280	131.5
290	1,034	790	379.5	1,290	232.4	1,790	167.5	2,290	130.9
300	999.4	800	374.8	1,300	230.6	1,800	166.6	2,300	130.4
310	967.2	810	370.2	1,310	228.9	1,810	165.6	2,310	129.8
320	967.9	820	365.6	1,320	227.1	1,820	164.7	2,320	129.2
330	908.6	830	361.2	1,330	225.4	1,830	163.8	2,330	128.7
340	881.8	840	356.9	1,340	223.7	1,840	162.9	2,340	128.1
350	856.6	850	352.7	1,350	222.1	1,850	162.1	2,350	127.6
360	832.8	860	348.6	1,360	220.4	1,860	161.2	2,360	127.0
370	810.3	870	344.6	1,370	218.8	1,870	160.3	2,370	126.5
380	789.0	880	340.7	1,380	217.3	1,880	159.5	2,380	126.0
390	768.8	890	336.9	1,390	215.7	1,890	158.6	2,390	125.4
400	749.6	900	333.1	1,400	214.2	1,900	157.8	2,400	124.9
410	731.3	910	329.5	1,410	212.6	1,910	157.0	2,410	124.4
420	713.9	920	325.9	1,420	211.1	1,920	156.2	2,420	123.9
430	697.3	930	322.4	1,430	209.7	1,930	155.3	2,430	123.4
440	681.4	940	319.0	1,440	208.2	1,940	154.5	2,440	122.9
450	666.3	950	315.6	1,450	206.8	1,950	153.8	2,450	122.4
460	651.8	960	312.3	1,460	205.4	1,960	153.0	2,460	121.9
470	637.9	970	309.1	1,470	204.0	1,970	152.2	2,470	121.4
480	624.6	980	303.9	1,480	202.6	1,980	151.4	2,480	120.9
490	611.9	990	302.8	1,490	201.2	1,990	150.7	2,490	120.4
500	599.6	1,000	299.8	1,500	199.9	2,000	149.9	2,500	119.9

Table VIII. Kilocycles (kc) to Meters (m), or Meters to Kilocycles

(Cont'd) [Columns are interchangeable]

kc or m	*m or kc*	*kc or m*	*m or kc*	*kc or m*	*m or kc*	*kc or m*	*m or kc*	*kc or m*	*m or kc*
2,510	119.5	3,010	99.61	3,510	85.42	4,010	74.77	4,510	66.48
2,520	119.0	3,020	99.28	3,520	85.18	4,020	74.58	4,520	66.33
2,530	118.5	3,030	98.95	3,530	84.94	4,030	74.40	4,530	66.19
2,540	118.0	3,040	98.62	3,540	84.70	4,040	74.21	4,540	66.04
2,550	117.6	3,050	98.30	3,550	84.46	4,050	74.03	4,550	65.89
2,560	117.1	3,060	97.98	3,560	84.22	4,060	73.85	4,560	65.75
2,570	116.7	3,070	97.66	3,570	83.98	4,070	73.67	4,570	65.61
2,580	116.2	3,080	97.34	3,580	83.75	4,080	73.49	4,580	65.46
2,590	115.8	3,090	97.03	3,590	83.52	4,090	73.31	4,590	65.32
2,600	115.3	3,100	96.72	3,600	83.28	4,100	73.13	4,600	65.18
2,610	114.9	3,110	96.41	3,610	83.05	4,110	72.95	4,610	65.04
2,620	114.4	3,120	96.10	3,620	82.82	4,120	72.77	4,620	64.90
2,630	114.0	3,130	95.79	3,630	82.60	4,130	72.60	4,630	64.76
2,640	113.6	3,140	95.48	3,640	82.37	4,140	72.42	4,640	64.62
2,650	113.1	3,150	95.18	3,650	82.14	4,150	72.25	4,650	64.48
2,660	112.7	3,160	94.88	3,660	81.92	4,160	72.07	4,660	64.34
2,670	112.3	3,170	94.58	3,670	81.70	4,170	71.90	4,670	64.20
2,680	111.9	3,180	94.28	3,680	81.47	4,180	71.73	4,680	64.06
2,690	111.5	3,190	93.99	3,690	81.25	4,190	71.56	4,690	63.93
2,700	111.0	3,200	93.69	3,700	81.03	4,200	71.30	4,700	63.79
2,710	110.6	3,210	93.40	3,710	80.81	4,210	71.22	4,710	63.66
2,720	110.2	3,220	93.11	3,720	80.60	4,220	71.05	4,720	63.52
2,730	109.8	3,230	92.82	3,730	80.38	4,230	70.88	4,730	63.39
2,740	109.4	3,240	92.54	3,740	80.17	4,240	70.71	4,740	63.25
2,750	109.0	3,250	92.25	3,750	79.95	4,250	70.55	4,750	63.12
2,760	108.6	3,260	91.97	3,760	79.74	4,260	70.38	4,760	62.99
2,770	108.2	3,270	91.69	3,770	79.53	4,270	70.22	4,770	62.86
2,780	107.8	3,280	91.41	3,780	79.32	4,280	70.05	4,780	62.72
2,790	107.5	3,290	91.13	3,790	79.11	4,290	69.89	4,790	62.59
2,800	107.1	3,300	90.86	3,800	78.90	4,300	69.73	4,800	62.46
2,810	106.7	3,310	90.58	3,810	78.69	4,310	69.56	4,810	62.33
2,820	106.3	3,320	90.31	3,820	78.49	4,320	69.40	4,820	62.20
2,830	105.9	3,330	90.04	3,830	78.28	4,330	69.24	4,830	62.07
2,840	105.6	3,340	89.77	3,840	78.08	4,340	69.08	4,840	61.95
2,850	105.2	3,350	89.50	3,850	77.88	4,350	68.92	4,850	61.82
2,860	104.8	3,360	89.23	3,860	77.67	4,360	68.77	4,860	61.69
2,870	104.5	3,370	88.97	3,870	77.47	4,370	68.61	4,870	61.56
2,880	104.1	3,380	88.70	3,880	77.27	4,380	68.45	4,880	61.44
2,890	103.7	3,390	88.44	3,890	77.07	4,390	68.30	4,890	61.31
2,900	103.4	3,400	88.18	3,900	76.88	4,400	68.14	4,900	61.19
2,910	103.0	3,410	87.92	3,910	76.68	4,410	67.99	4,910	61.06
2,920	102.7	3,420	87.67	3,920	76.48	4,420	67.83	4,920	60.94
2,930	102.3	3,430	87.41	3,930	76.29	4,430	67.68	4,930	60.82
2,940	102.0	3,440	87.16	3,940	76.10	4,440	67.53	4,940	60.69
2,950	101.6	3,450	86.90	3,950	75.90	4,450	67.38	4,950	60.57
2,960	101.3	3,460	96.65	3,960	75.51	4,460	67.22	4,960	60.45
2,970	100.9	3,470	86.40	3,970	75.52	4,470	67.07	4,970	60.33
2,980	100.6	3,480	86.16	3,980	75.33	4,480	66.92	4,980	60.20
2,990	100.3	3,490	85.91	3,900	75.14	4,490	66.78	4,990	60.08
3,000	99.94	3,500	85.66	4,000	74.96	4,500	66.63	5,000	59.96

Table VIII. Kilocycles (kc) to Meters (m), or Meters to Kilocycles

(Cont'd) [Columns are interchangeable]

kc or m	*m or kc*	*kc or m*	*m or kc*	*kc or m*	*m or kc*	*kc or m*	*m or kc*	*kc or m*	*m or kc*
5,010	59.84	5,510	54.41	6,010	49.89	6,510	46.06	7,010	42.77
5,020	59.73	5,520	54.32	6,020	49.80	6,520	45.98	7,020	42.71
5,030	59.61	5,530	54.22	6,030	49.72	6,530	45.91	7,030	42.65
5,040	59.49	5,540	54.12	6,040	49.64	6,540	45.84	7,040	42.59
5,050	59.37	5,550	54.02	6,050	49.56	6,550	45.77	7,050	42.53
5,060	59.25	5,560	53.92	6,060	49.48	6,560	45.70	7,060	42.47
5,070	59.13	5,570	53.83	6,070	49.39	6,570	45.63	7,070	42.41
5,080	59.02	5,580	53.73	6,080	49.31	6,580	45.57	7,080	42.35
5,090	58.90	5,590	53.64	6,090	49.23	6,590	45.50	7,090	42.29
5,100	58.79	5,600	53.54	6,100	49.15	6,600	45.43	7,100	42.23
5,110	58.67	5,610	53.44	6,110	49.07	6,610	45.36	7,110	42.17
5,120	58.56	5,620	53.35	6,120	48.99	6,620	45.29	7,120	42.11
5,130	58.44	5,630	53.25	6,130	48.91	6,630	45.22	7,130	42.05
5,140	58.33	5,640	53.16	6,140	48.83	6,640	45.15	7,140	41.99
5,150	58.22	5,650	53.07	6,150	48.75	6,650	45.09	7,150	41.93
5,160	58.10	5,660	52.97	6,160	48.67	6,660	45.02	7,160	41.87
5,170	57.99	5,670	52.88	6,170	48.59	6,670	44.95	7,170	41.82
5,180	57.88	5,680	52.79	6,180	48.51	6,680	44.88	7,180	41.76
5,190	57.77	5,690	52.69	6,190	48.44	6,690	44.82	7,190	41.70
5,200	57.66	5,700	52.60	6,200	48.36	6,700	44.75	7,200	41.64
5,210	57.55	5,710	52.51	6,210	48.28	6,710	44.68	7,210	41.58
5,220	57.44	5,720	52.42	6,220	48.20	6,720	44.62	7,220	41.53
5,230	57.33	5,730	52.32	6,230	48.13	6,730	44.55	7,230	41.47
5,240	57.22	5,740	52.23	6,240	48.05	6,740	44.48	7,240	41.41
5,250	57.11	5,750	52.14	6,250	47.97	6,750	44.42	7,250	41.35
5,260	57.00	5,760	52.05	6,260	47.89	6,760	44.35	7,260	41.30
5,270	56.89	5,770	51.96	6,270	47.82	6,770	44.29	7,270	41.24
5,280	56.78	5,780	51.87	6,280	47.74	6,780	44.22	7,280	41.18
5,290	56.68	5,790	51.78	6,290	47.67	6,790	44.16	7,290	41.13
5,300	56.57	5,800	51.69	6,300	47.59	6,800	44.09	7,300	41.07
5,310	56.46	5,810	51.60	6,310	47.52	6,810	44.03	7,310	41.02
5,320	56.36	5,820	51.52	6,320	47.44	6,820	43.96	7,320	40.96
5,330	56.25	5,830	51.43	6,330	47.36	6,830	43.90	7,330	40.90
5,340	56.15	5,840	51.34	6,340	47.29	6,840	43.83	7,340	40.85
5,350	56.04	5,850	51.25	6,350	47.22	6,850	43.77	7,350	40.79
5,360	55.94	5,860	51.16	6,360	47.14	6,860	43.71	7,360	40.74
5,370	55.83	5,870	51.08	6,370	47.07	6,870	43.64	7,370	40.68
5,380	55.73	5,880	50.99	6,380	46.99	6,880	43.58	7,380	40.63
5,390	55.63	5,890	50.90	6,390	46.92	6,890	43.52	7,390	40.57
5,400	55.52	5,900	50.82	6,400	46.85	6,900	43.45	7,400	40.52
5,410	55.42	5,910	50.73	6,410	46.77	6,910	43.39	7,410	40.46
5,420	55.32	5,920	50.65	6,420	46.70	6,920	43.33	7,420	40.41
5,430	55.22	5,930	50.56	6,430	46.63	6,930	43.26	7,430	40.35
5,440	55.11	5,940	50.47	6,440	46.56	6,940	43.20	7,440	40.30
5,450	55.01	5,950	50.39	6,450	46.48	6,950	43.14	7,450	40.24
5,460	54.91	5,960	50.31	6,460	46.41	6,960	43.08	7,460	40.19
5,470	54.81	5,970	50.22	6,470	46.34	6,970	43.02	7,470	40.14
5,480	54.71	5,980	50.14	6,480	46.27	6,980	42.95	7,480	40.08
5,490	54.61	5,990	50.05	6,490	46.20	6,990	42.89	7,490	40.03
5,500	54.51	6,000	49.97	6,500	46.13	7,000	42.83	7,500	39.98

Table VIII. Kilocycles (kc) to Meters (m), or Meters to Kilocycles

(Cont'd) [Columns are interchangeable]

kc or m	*m or kc*	*kc or m*	*m or kc*	*kc or m*	*m or kc*	*kc or m*	*m or kc*	*kc or m*	*m or kc*
7,510	39.92	8,010	37.43	8,510	35.23	9,010	33.28	9,510	31.53
7,520	39.87	8,020	37.38	8,520	35.19	9,020	33.24	9,520	31.49
7,530	39.82	8,030	37.34	8,530	35.15	9,030	33.20	9,530	31.46
7,540	39.76	8,040	37.29	8,540	35.11	9,040	33.17	9,540	31.43
7,550	39.71	8,050	37.24	8,550	35.07	9,050	33.13	9,550	31.39
7,560	39.66	8,060	37.20	8,560	35.03	9,060	33.09	9,560	31.36
7,570	39.61	8,070	37.15	8,570	34.98	9,070	33.06	9,570	31.33
7,580	39.55	8,080	37.11	8,580	34.94	9,080	33.02	9,580	31.30
7,590	39.50	8,090	37.06	8,590	34.90	9,090	32.98	9,590	31.26
7,600	39.45	8,100	37.01	8,600	34.86	9,100	32.95	9,600	31.23
7,610	39.40	8,110	36.97	8,610	34.82	9,110	32.91	9,610	31.20
7,620	39.35	8,120	36.92	8,620	34.78	9,120	32.88	9,620	31.17
7,630	39.29	8,130	36.88	8,630	34.74	9,130	32.84	9,630	31.13
7,640	39.24	8,140	36.83	8,640	34.70	9,140	32.80	9,640	31.10
7,650	39.19	8,150	36.79	8,650	34.66	9,150	32.77	9,650	31.07
7,660	39.14	8,160	36.74	8,660	34.62	9,160	32.73	9,660	31.04
7,670	39.09	8,170	36.70	8,670	34.58	9,170	32.70	9,670	31.01
7,680	39.04	8,180	36.65	8,680	34.54	9,180	32.66	9,680	30.97
7,690	38.99	8,190	36.61	8,690	34.50	9,190	32.62	9,690	30.94
7,700	38.04	8,200	36.56	8,700	34.46	9,200	32.59	9,700	30.91
7,710	38.89	8,210	36.52	8,710	34.42	9,210	32.55	9,710	30.88
7,720	38.84	8,220	36.47	8,720	34.38	9,220	32.52	9,720	30.85
7,730	38.79	8,230	36.43	8,730	34.34	9,230	32.48	9,730	30.81
7,740	38.74	8,240	36.39	8,740	34.30	9,240	32.45	9,740	30.78
7,750	38.69	8,250	36.34	8,750	34.27	9,250	32.41	9,750	30.75
7,760	38.64	8,260	36.30	8,760	34.23	9,260	32.38	9,760	30.72
7,770	38.59	8,270	36.25	8,770	34.19	9,270	32.34	9,770	30.69
7,780	38.54	8,280	36.21	8,780	34.15	9,280	32.31	9,780	30.66
7,790	38.49	8,290	36.17	8,790	34.11	9,290	32.27	9,790	30.63
7,800	38.44	8,300	36.12	8,800	34.07	9,300	32.24	9,800	30.59
7,810	38.39	8,310	36.08	8,810	34.03	9,310	32.20	9,810	30.56
7,820	38.34	8,320	36.04	8,820	33.99	9,320	32.17	9,820	30.53
7,830	38.29	8,330	35.99	8,830	33.95	9,330	32.14	9,830	30.50
7,840	38.24	8,340	35.95	8,840	33.92	9,340	32.10	9,840	30.47
7,850	38.19	8,350	35.91	8,850	33.88	9,350	32.07	9,850	30.44
7,860	38.14	8,360	35.86	8,860	33.84	9,360	32.03	9,860	30.41
7,870	38.10	8,370	35.82	8,870	33.80	9,370	32.00	9,870	30.38
7,880	38.05	8,380	35.78	8,880	33.76	9,380	31.96	9,880	30.35
7,890	38.00	8,390	35.74	8,890	33.73	9,390	31.93	9,890	30.32
7,900	37.95	8,400	35.69	8,900	33.69	9,400	31.90	9,900	30.28
7,910	37.90	8,410	35.65	8,910	33.65	9,410	31.86	9,910	30.25
7,920	37.86	8,420	35.61	8,920	33.61	9,420	31.83	9,920	30.22
7,930	37.81	8,430	35.57	8,930	33.57	9,430	31.79	9,930	30.19
7,940	37.76	8,440	35.52	8,940	33.54	9,440	31.76	9,940	30.16
7,950	37.71	8,450	35.48	8,950	33.50	9,450	31.73	9,950	30.13
7,960	37.67	8,460	35.44	8,960	33.46	9,460	31.69	9,960	30.10
7,970	37.62	8,470	35.40	8,970	33.42	9,470	31.66	9,970	30.07
7,980	37.57	8,480	35.36	8,980	33.39	9,480	31.63	9,980	30.04
7,990	37.52	8,490	35.31	8,990	33.35	9,490	31.59	9,990	30.01
8,000	37.48	8,500	35.27	9,000	33.31	9,500	31.56	10,000	29.98

APPENDIX VII

INDUCTANCE-CAPACITANCE PRODUCT VALUES

1. General

a. The formula for determining the frequency to which any circuit containing inductance and capacitance will tune is—

$$f = \frac{159{,}000}{\sqrt{LC}}$$

where: f is the frequency in cycles per second,
L is the inductance of the coil in microhenries,
C is the capacitance of the entire circuit in microfarads.

b. The product of inductance L and capacitance C of the circuit determines the frequency at which the circuit is resonant, or *in tune.* For each frequency there is a definite value of this product (called the inductance-capacitance product, or the LC value) for which resonance occurs. If this value is known, it is possible to determine the correct amount of inductance required for use with any value of capacitance, and vice versa, in order to produce resonance at a given frequency. When either the inductance or capacitance is known, the other may be easily determined by dividing the LC value by the known quantity; in other words, the LC value is divided by the known capacity, or known inductance, and the quotient of the division is the required inductance or capacitance.

Thus:

$$\text{Inductance} = \frac{LC \text{ value}}{\text{Capacitance}} \qquad \text{Capacitance} = \frac{LC \text{ value}}{\text{Inductance}}$$

2. Table IX

Table IX gives the *inductance-capacitance values* necessary to produce resonance at frequencies from 300 to 300,000 kilocycles. This range may be easily extended, as explained below. The inductance is given in microhenrys; the capacitance is given in microfarads.

Example: Find the inductance of a coil necessary to tune to a frequency of 600 kilocycles (500 meters) with a tuning capacitor of 0.00035 microfarads capacitance. From the LC table, the LC value

for this frequency is found to be 0.0704. Dividing this value by the given capacitance (0.00035) gives the result: 201 microhenries.

Example: Find the capacitance of a tuning capacitor necessary to tune to a frequency of 1,500 kilocycles (200 meters) with the above coil of 201 microhenrys inductance. The *LC* value for this frequency is found (from the *LC* table) to be 0.01126. Dividing this *LC* value by the inductance (201) gives a result 0.000055 microfarads (or 55 micromicrofarads).

a. Consulting the *LC* table it will be noted that, as the frequency decreases, the *LC* value increases. If the frequency is divided by 10, the *LC* value must be multiplied by 100. This must be kept in mind if values beyond the range of the table are to be determined.

Example: To determine the *LC* value for 2 kilocycles (2,000 cycles), the *LC* value for 2,000,000 cycles is taken from the table and the decimal point is moved six places to the right; 6330 is the correct *LC* value.

b. If it is desired to check the results of the use of the *LC* table, it should be remembered that resonance occurs when the inductive reactance is equal to the capacitive reactance. The frequency at which this occurs is the resonance frequency.

Table IX. Relation between wavelength in meters, frequency in kilocycles, and the product of inductance in microhenries and capacity in microfarads, required to produce resonance at these corresponding frequencies or wavelengths, (L x C constant).

W.L. in Meters	*f* in kc.	*L* x *C*	W.L. in Meters	*f* in kc.	*L* x *C*	W.L. in Meters	*f* in kc.	*L* x *C*
1	300,000	0.0000003	450	667	0.0570	740	405	0.1541
2	150,000	0.0000111	460	652	0.0596	745	403	0.1562
3	100,000	0.0000018	470	639	0.0622	750	400	0.1583
4	75,000	0.0000045	480	625	0.0649	755	397	0.1604
5	60,000	0.0000057	490	612	0.0676	760	395	0.1626
6	50,000	0.0000101	500	600	0.0704	765	392	0.1647
7	42,900	0.0000138	505	594	0.0718	770	390	0.1669
8	37,500	0.0000180	510	588	0.0732	775	387	0.1690
9	33,333	0.0000228	515	583	0.0747	780	385	0.1712
10	30,000	0.0000282	520	577	0.0761	785	382	0.1734
20	15,000	0.0001129	525	572	0.0776	790	380	0.1756
30	10,000	0.0002530	530	566	0.0791	795	377	0.1779
40	7,500	0.0004500	535	561	0.0806	800	375	0.1801
50	6,000	0.0007040	540	556	0.0821	805	373	0.1824
60	5,000	0.0010140	545	551	0.0836	810	370	0.1847
70	4,290	0.0013780	550	546	0.0852	815	368	0.1870
80	3,750	0.0018010	555	541	0.0867	820	366	0.1893
90	3,333	0.0022800	560	536	0.0883	825	364	0.1916
100	3,000	0.00282	565	531	0.0899	730	361	0.1939
110	2,727	0.00341	570	527	0.0915	835	359	0.1962
120	2,500	0.00405	575	522	0.0931	840	357	0.1986
130	2,308	0.00476	580	517	0.0947	845	355	0.201
140	2,143	0.00552	585	513	0.0963	850	353	0.203
150	2,000	0.00633	590	509	0.0980	855	351	0.206
160	1,875	0.00721	595	504	0.0996	860	349	0.208
170	1,764	0.00813	600	500	0.1013	865	347	0.211
180	1,667	0.00912	605	496	0.1030	870	345	0.213
190	1,579	0.01015	610	492	0.1047	875	343	0.216
200	1,500	0.01126	615	488	0.1065	880	341	0.218
210	1,429	0.01241	620	484	0.1082	885	339	0.220
220	1,364	0.01362	625	480	0.1100	890	337	0.223
230	1,304	0.01489	630	476	0.1117	895	335	0.225
240	1,250	0.01621	635	472	0.1135	900	333	0.228
250	1,200	0.01759	640	469	0.1153	905	331	0.231
260	1,154	0.01903	645	465	0.1171	910	330	0.233
270	1,111	0.0205	650	462	0.1189	915	328	0.236
280	1,071	0.0221	655	458	0.1208	920	326	0.238
290	1,034	0.0237	660	455	0.1226	925	324	0.241
300	1,000	0.0253	665	451	0.1245	930	323	0.243
310	968	0.0270	670	448	0.1264	935	321	0.246
320	938	0.0288	675	444	0.1283	940	319	0.249
330	909	0.0306	680	441	0.1302	945	317	0.251
340	883	0.0325	685	438	0.1321	950	316	0.254
350	857	0.0345	690	435	0.1340	955	314	0.257
360	834	0.0365	695	432	0.1360	960	313	0.259
370	811	0.0385	700	429	0.1379	965	311	0.262
380	790	0.0406	705	426	0.1399	970	309	0.265
390	769	0.0428	710	423	0.1419	975	308	0.268
400	750	0.0450	715	420	0.1439	980	306	0.270
410	732	0.0473	720	417	0.1459	985	305	0.273
420	715	0.0496	725	414	0.1479	990	303	0.276
430	698	0.0520	730	411	0.1500	995	302	0.279
440	682	0.0545	735	408	0.1521	1000	300	0.282

APPENDIX VIII

SQUARES AND SQUARE ROOTS

Mathematical table of squares and square roots

n	n^2	$\sqrt{n}$	n	n^2	$\sqrt{n}$	n	n^2	$\sqrt{n}$
1	1	1.000	41	1681	6.4031	81	6561	9.0000
2	4	1.414	42	1764	6.4807	82	6724	9.0554
3	9	1.732	43	1849	6.5574	83	6889	9.1104
4	16	2.000	44	1936	6.6332	84	7056	9.1652
5	25	2.236	45	2025	6.7082	85	7225	9.2195
6	36	2.449	46	2116	6.7823	86	7396	9.2736
7	49	2.646	47	2209	6.8557	87	7569	9.3274
8	64	2.828	48	2304	6.9282	88	7744	9.3808
9	81	3.000	49	2401	7.0000	89	7921	9.4340
10	100	3.162	50	2500	7.0711	90	8100	9.4868
11	121	3.3166	51	2601	7.1414	91	8281	9.5394
12	144	3.4641	52	2704	7.2111	92	8464	9.5917
13	169	3.6056	53	2809	7.2801	93	8649	9.6437
14	196	3.7417	54	2916	7.3485	94	8836	9.6954
15	225	3.8730	55	3025	7.4162	95	9025	9.7468
16	256	4.0000	56	3136	7.4833	96	9216	9.7980
17	289	4.1231	57	3249	7.5498	97	9409	9.8489
18	324	4.2426	58	3364	7.6158	98	9604	9.8995
19	361	4.3589	59	3481	7.6811	99	9801	9.9499
20	400	4.4721	60	3600	7.7460	100	10000	10.0000
21	441	4.5826	61	3721	7.8102	101	10201	10.0499
22	484	4.6904	62	3844	7.8740	102	10404	10.0995
23	529	4.7958	63	3969	7.9373	103	10609	10.1489
24	576	4.8990	64	4096	8.0000	104	10816	10.1980
25	625	5.0000	65	4225	8.0623	105	11025	10.2470
26	676	5.0990	66	4356	8.1240	106	11236	10.2956
27	729	5.1962	67	4489	8.1854	107	11449	10.3441
28	784	5.2915	68	4624	8.2462	108	11664	10.3923
29	841	5.3852	69	4761	8.3066	109	11881	10.4403
30	900	5.4772	70	4900	8.3666	110	12100	10.4881
31	961	5.5678	71	5041	8.4261	111	12321	10.5357
32	1024	5.6569	72	5184	8.4853	112	12544	10.5830
33	1089	5.7446	73	5329	8.5440	113	12769	10.6301
34	1156	5.8310	74	5476	8.6023	114	12996	10.6771
35	1225	5.9161	75	5625	8.6603	115	13225	10.7238
36	1296	6.0000	76	5776	8.7178	116	13456	10.7703
37	1369	6.0828	77	5929	8.7750	117	13689	10.8167
38	1444	6.1644	78	6084	8.8318	118	13924	10.8628
39	1521	6.2450	79	6241	8.8882	119	14161	10.9087
40	1600	6.3246	80	6400	8.9443	120	14400	10.9545

APPENDIX IX

BIBLIOGRAPHY

1. Electricity and Magnetism

TM 1–455, *Electrical Fundamentals.* War Department, Washington, D. C.

2. Radio Principles

Basic Radio, by J. Barton Hoag. D. Van Nostrand Co., Inc., New York, N. Y.

Elements of Radio, by Charles I. Hellman. D. Van Nostrand Co., Inc., New York N. Y.

Fundamentals of Radio, edited by W. L. Everitt. Prentice-Hall, Inc., New York, N. Y.

Fundamentals of Radio, by F. E. Terman. McGraw-Hill Book Co., Inc., New York, N. Y.

Principles of Radio, by Keith Henney. John Wiley and Sons, Inc., New York, N. Y.

The Radio Amateur's Handbook. American Radio Relay League, West Hartford, Conn.

The Radio Handbook. Editors and Engineers, Ltd., Santa Barbara, Calif.

Radio Physics Course, by Alfred A. Ghirardi. Radio Technical Publishing Co., New York, N. Y.

Understanding Radio, by Watson, Welch, and Eby. McGraw-Hill Book Co., Inc., New York, N. Y.

3. Vacuum-tube Data

Receiving Tube Manual and *Transmitting Tube Manual.* Both published by the R.C.A. Manufacturing Co., Inc., Camden, N. J.

4. Advanced Radio Literature

Radio Engineering, by F. E. Terman. McGraw-Hill Book Co., Inc., New York, N. Y.

Radio Engineering Handbook, edited by Keith Henney. McGraw-Hill Book Co., Inc., New York, N. Y.

APPENDIX X

REVIEW QUESTIONS

Section I:

1. In what way can the theory of radio transmission be compared to the action of a transformer?
2. What is the purpose of the transmitting antenna?
3. What is the velocity of all radio waves?
4. What is the wavelength (in meters) of a radio signal with a frequency of 300,000 cycles? Of 1,500 kilocycles? Of 300 megacycles?
5. What is the frequency of a radio signal with a wavelength of 5 meters? Of 50 meters? Of 600 meters?
6. What frequencies are known as radio frequencies? Audio frequencies?
7. What is the purpose of the receiving antenna?
8. The simplest possible radio transmitter consists of what parts?
9. Why are amplifiers required in radio transmitters?
10. Why are amplifiers required for radio receivers?

Section II:

1. What is the difference between a series and a parallel circuit?
2. As the frequency is increased what happens to the reactance of an inductor?
3. Will the insertion of an iron core in a coil increase or decrease its inductance?
4. If two capacitors are placed in series, would the total capacitance be more or less than either one alone?
5. What is meant by a permeability-tuned coil?
6. If the distance between two plates is increased, what is the effect on its capacitance?
7. All electrolytic capacitors are polarized. What does this mean, and why are they polarized?
8. As the frequency is decreased what happens to the reactance of a capacitor?
9. What circuit element would be used in one branch of a parallel circuit to block direct current but allow the passage of alternating current?
10. What circuit element would be used in one branch of a parallel

circuit to block alternating current but allow the passage of direct current?

Section III:

1. What is selectivity? What can affect the selectivity of a tuned circuit?
2. What indication can be used to show when a series-tuned circuit is at resonance? What indication can be used to show when a parallel-tuned circuit is at resonance?
3. When is the impedance of a series-tuned circuit lowest? When is it highest?
4. What is the phase relation of current and voltage in a capacitor? In an inductor?
5. Is the voltage very high or very low across either the capacitor or the inductor in a series-tuned circuit when at resonance? Is the voltage very high or very low across the entire parallel-tuned circuit when at resonance?
6. Is the line current through a parallel-resonant circuit maximum or minimum at resonance?
7. What is a tank circuit and how does it work?
8. What is resistance coupling? What is impedance-capacitive coupling?
9. Why is a blocking capacitor sometimes necessary in resistance coupling?
10. What is the difference between a single-tuned transformer and a double-tuned transformer?

Section IV:

1. What determines the amount of plate-current flow in a vacuum tube?
2. What action takes place in a diode when an alternating current is placed upon its plate? What is the nature of the output wave?
3. How does the grid control the flow of electrons in a triode?
4. Name and describe three types of plate loads, and tell why it is necessary to have a plate load in an amplifier circuit.
5. What effect will an increase in the negative grid voltage of a triode have on the amount of plate-current change with a given input?
6. Name and describe two methods of biasing the grid of a vacuum tube.
7. What is meant by the term "plate resistance"?
8. What effect does the screen grid have on the plate-current flow in a tetrode?
9. What effect does a suppressor grid have upon secondary emission?

10. How does the grid of a variable-mu tube differ from that of a normal sharp cut-off tube?

Section V:

1. When a diode is used as a detector, which component of the radio signal is removed by the process of detection?
2. Explain why a grid-leak detector is similar to a diode detector and one stage of amplification.
3. Under what condition would plate current be at maximum in a grid-leak detector?
4. What would be the result if too strong a signal were applied to the grid of a grid-leak detector?
5. Why is bias applied to the grid of a plate detector?
6. What advantage does a plate detector have over a grid detector? What advantage does a grid detector have over a plate detector?
7. What is regeneration?
8. What is the advantage of regeneration in a detector?
9. Explain the difference between a regenerative detector and a heterodyne detector.
10. What advantage does the vacuum-tube voltmeter have over other conventional types of meters?

Section VI:

1. What is the difference between the output of a voltage amplifier and a power amplifier?
2. Why must the bias of a class *A* amplifier-tube be such that the tube operates over the linear portion of its E_G–I_P curve?
3. How is distortion avoided in class *B* a-f amplifiers?
4. How does the bias for class *AB* operation compare with that for class *A* and class *B* operation?
5. What are the bias requirements for class *C* operation?
6. What type of plate load is used in a class *C* r-f amplifier?
7. What are some of the methods of coupling one amplifier stage to another?
8. What may be the result of a leaky blocking capacitor?
9. What method of gain control is generally used in r-f amplifier circuits? What is the usual method of controlling gain in an a-f amplifier?
10. What stages of a receiver are generally controlled by automatic volume control?

Section VII:

1. In a tuned r-f receiver, what is the purpose of the r-f stages?
2. Why are pentodes and tetrodes more suitable in r-f amplifiers than triodes?

3. What are two common methods of band spread?
4. What is meant by decoupling and why is it necessary?
5. How is decoupling accomplished?
6. What type of detectors are usually used in t-r-f receivers?
7. Describe some methods of volume control.
8. Why is shielding necessary in a receiver?
9. What is meant by band switching?
10. How may delayed automatic volume control be obtained?

Section VIII:

1. How does the superheterodyne receiver overcome the disadvantages of the tuned r-f receiver?
2. How is the intermediate frequency obtained?
3. What are the functions of a frequency converter?
4. Describe three methods of frequency conversion.
5. Describe the normal operation of a pentagrid converter in a circuit where no separate local-oscillator tube is used. Explain the kind of frequency waves likely to be found on each of the grids of such a pentagrid-converter tube.
6. What is the function of a padder capacitor and where is it placed in a superheterodyne circuit?
7. What two methods are used to tune i-f transformers?
8. What is the advantage of using a crystal filter?
9. Which of the two types of amplifiers, r-f or i-f, is more efficient? Why?
10. What stage must be added to an ordinary superheterodyne receiver so that it will detect c-w signals? Why?

Section IX:

1. Name three classes of power supplies commonly employed to supply electrode voltages for vacuum tubes.
2. What are the four basic components of any power supply which is operated by alternating current?
3. Differentiate between a half-wave and a full-wave rectifier, and explain the advantages of one over the other.
4. Explain the purpose and operation of a power-filter circuit.
5. For a given applied (input) voltage, which type of power filter gives the higher output voltage, a capacitor-input or choke-input filter?
6. Explain the purpose of a bleeder.
7. Explain what is meant by the term "ripple voltage."
8. Why is it necessary that the ripple voltage in the output of a power supply be as low as possible?
9. What is the function of the vibrator in a vibrator type power supply?

10. Name two types of vacuum-tube rectifiers, and explain how they differ from each other.

Section X:

1. What are the basic requirements of a vacuum-tube oscillator?
2. What tests can be made on an oscillator to determine if it is oscillating?
3. How is feedback obtained in a Hartley oscillator? How is feedback obtained in a Colpitts oscillator? How is feedback obtained in a tuned-plate tuned-grid oscillator?
4. What is meant by a series-fed oscillator? What is meant by a shunt-fed oscillator?
5. In what respect does a Colpitts oscillator differ from a Hartley oscillator?
6. How can frequency multiplication be obtained with an electron-coupled oscillator?
7. What is the piezo-electric effect? Upon what main factor does the mechanical resonant frequency of a crystal depend?
8. Why is a crystal-controlled oscillator stable?
9. What is the advantage of an *AT*-cut crystal over an *X*- or *Y*-cut?
10. What is the chief advantage and disadvantage of the Pierce oscillator? How is feedback obtained in the Pierce oscillator?

Section XI:

1. For what reasons is an oscillator alone not entirely suited to serve as a transmitter?
2. How does the tank circuit serve to create a sine-wave output from plate-current peaks?
3. What are some of the advantages of a master-oscillator, power-amplifier circuit?
4. How is self-biased developed across the grid-bias resistor?
5. What will happen in a grid-resistor-biased amplifier if excitation to it is removed?
6. What indications determine when a stage is properly tuned?
7. What is the reason for neutralization? What are some of the methods of neutralization? How is neutralization accomplished in each type?
8. What are parasitic oscillations, and how are they eliminated?
9. Why is it best to operate a frequency multiplier as a class *C* stage? What three conditions must be present for efficient production of harmonics?
10. What are some of the keying methods used in transmitters?

Section XII:

1. What is meant by the term "amplitude modulation"?

2. What is the purpose of a speech amplifier in a transmitter?

3. Is it necessary for the modulator of a plate-modulated transmitter to be a power amplifier? Why?

4. Between what two values must the instantaneous plate voltage of a plate-modulated r-f amplifier swing for 100-percent modulation?

5. Why is the term "constant current" applied to the type of plate modulation which uses an iron-core choke to develop the audio voltage?

6. What is meant by the term "percentage of modulation"?

7. When using plate modulation, what class of r-f amplifier is modulated? Why?

8. Explain what is meant by the term "side bands."

9. What are the effects of over-modulation?

10. Why does a plate-modulated class *C* r-f amplifier require such a large exciting voltage on the grid?

Section XIII:

1. Explain why the power output of an f-m transmitter is constant when modulated.

2. What is the purpose of a limiter? Why is a limiter not used in amplitude modulation?

3. What is meant by the term "deviation"? What is the difference between deviation and carrier swing?

4. In what way is the discriminator in frequency modulation similar to the detector in amplitude modulation?

5. What determines the rate of deviation in an f-m transmitter? What is the separating band between adjacent f-m channels called?

6. Why is a stabilization circuit necessary in the reactance-tube method of frequency modulation? Is the use of a crystal oscillator practical in the reactance-tube system of modulation? What is the basic principle behind the operation of the reactance-tube modulator?

7. How much power must the modulator add to the carrier power? Explain.

8. Define the term "resting frequency."

9. Name and explain the circuit which prevents noise from being heard when no signal is present. Does the use of this circuit offer any direct technical assistance to the radio operator?

10. In what way is frequency modulation superior to amplitude modulation for Army communication?

Section XIV:

1. A given antenna is too short for the frequency at which it is to be used. What can be added to the antenna to make it resonant to the proper frequency?

2. What is the approximate impedance at the center of a Hertz antenna when it is resonant? When it is not resonant?

3. Is a Marconi antenna usually fed at a point of high or low impedance? What is the electrical length of a Marconi antenna?

4. What is the advantage gained by the use of a single-wire resonant feeder over other types of feed? What is the disadvantage of using a single-wire resonant feeder over other types of feed? How may this disadvantage be minimized?

5. What is the advantage of using a Marconi antenna for a mobile transmitter? If a Marconi antenna is installed in a scout car, would a ground or counterpoise be used?

6. Describe the construction of a section of coaxial cable.

7. Why is it not good practice to connect an antenna directly to the plate tank circuit of a transmitter? Give two reasons.

8. Which, in general, is more useful for communication over extremely long distances, the ground wave or the sky wave?

9. What is the difference between a resonant and a nonresonant feeder system? Describe two examples of each type of feeder system.

10. Give the reasons for properly matching the impedance of transmission lines both at the transmitter and antenna ends.

Section XV:

1. What are the upper and lower frequency limits of the v-h-f band? What are these limits in terms of wavelength?

2. Are sky waves put to any normal practical use in the transmission and reception of v-h-f signals?

3. Describe the path taken by a direct ray in traveling from the transmitter antenna to the receiver.

4. What is line-of-sight, or optical distance, as applied to v-h-f radiations?

5. Why does distributed inductance and capacitance in certain v-h-f components upset the normal operation of the circuit? Is it necessary to make any change in the circuit to compensate for distributed inductance and capacitance, or should the faulty components be removed?

6. State three distinct uses of transmission lines at very-high-frequencies.

7. Define and explain what is meant by skin effect.

8. Name and describe briefly three different types of receivers suitable for operation in the v-h-f band.

9. What is the purpose of the converter stage in a v-h-f superheterodyne receiver?

10. Can the *direct ray* from a v-h-f transmitting antenna be received beyond the horizon? Explain why this is possible.

Section XVI:

1. Name all the components of a cathode-ray tube electron gun, and describe the effect of each element on the stream of electrons. What is the general purpose of an electron gun?

2. If all deflection plates were removed from a cathode-ray tube, would the electron gun continue to emit a narrow beam of electrons? Why?

3. If the same a-c waveform is applied to both the horizontal and vertical deflection plates of a normal oscillograph at the same time, what will be the resultant figure, as viewed on the screen of the tube?

4. Why is a linear saw-tooth sweep voltage necessary in radio work?

5. What is meant by the trace of an oscillograph cathode-ray tube?

6. Explain briefly the method of generating a saw-tooth sweep voltage for use with a typical oscillograph unit.

7. What is the fundamental difference between a normal triode vacuum tube and the triode tube used in a sweep-circuit oscillator?

8. What determines the frequency of a saw-tooth, sweep-circuit oscillator? How can this frequency be conveniently varied?

9. Why is it necessary to have two separate amplifiers for the horizontal and vertical deflection plates of a cathode-ray oscillograph?

10. Explain the electrical operation of the electron-ray, tuning-indicator tube in a receiver employing automatic volume control when no signal is being received in the r-f stages; when a strong signal is being received in the r-f stages; and when the a-v-c lead to the electron-ray tuning indicator is disconnected.

INDEX

	Paragraph	Page
Air-core transformers	28	48
Alternating-current resistance	32	54
Amplification factor	41	72
Amplifiers:		
Class A	59	92
Class AB	61	97
Class B	60	94
Class C	62	97
Push-pull	60	94
Voltage and power	58–62	91
Amplitude modulation	113	177
Angle of radiation	149	244
Antenna:		
Adcock	168	272
Coupling methods	146	241
Direction-finding	168	272
Directive	148	244
Dummy	152	251
Hertz	139	230
Impedance	142	234
Length	141	233
Loading	143	234
Loop	168	272
Radiation	–138, 149	226, 244
Receiving	153	251
Tuning systems	147	243
Very-high-frequency	161	258
Armstrong (phase) modulation	137–138, 149	226, 244
Audio frequency	3	2
Automatic volume control	70	110
Autotransformers	12	18
Band-elimination filters	26	43
Band-pass filters	26	43
Band spread	68	106
Bands, side	116	183
Battery power supply	86	134
Beacons, radio	168	272
Beam-power tubes	46	78
Beat-frequency oscillator	76, 79	118, 126
Bias	39	68
Bleeder	90	141
Buffer amplifier	103	163
Capacitance, distributed	31	53
Capacitance calculations	14	25
Capacitive reactance	10, 21, 22	15, 34, 36
Capacitors:		
Adjustable	13	21
Bypass and blocking	13	21
Color code	13	21
Electrolytic	13	21

	Paragraph	Page
Fixed	13	21
Mica	13	21
Paper	13	21
Variable	13	21
Carbon microphone	114	179
Cathodes, types of	33	55
Cathodes, directly and indirectly heated	48	80
Cathode-ray tube	162	259
Cathode-ray oscillograph	163–166	262
Choke coils	11	15
Circuit elements, operation	15	26
Circuit elements, a-f	16, 114	28, 179
Circuits:		
Parallel resonance	24	40
Series resonance	23	37
Tuned	19	33
Coaxial cable	145	238
Coils. *See* Inductors.		
Colpitts oscillator	99	153
Communication frequencies	3	2
Compass, radio	168	272
Concentric lines	158	255
C-w transmission	101–112	161
C-w transmitter:		
Capabilities	112	175
Keying methods	109	170
Typical circuit	110	173
C-w reception	55	89
Coupling:		
Antenna	146	241
Impedance-capacitance	30	52
Inductance	30	52
Interstage, for amplifiers	63	98
Resistance	29	51
Transformer	27, 28	47, 48
Critical angle of radiation	149	244
Crystal filter	77	122
Crystals	100	156
Curves and graphs	20	33
Detection:		
C-w	55	89
Diode	51	84
Grid-leak	52	85
Heterodyne	56	89
Phone	50	84
Plate	53	87
Regenerative	54	88
Deviation ratio (f-m)	128	197
Diode:		
Detector	51	84
Rectifier	35	58
Direct wave	155	252
Discriminator (f-m)	132	206
Distortion, harmonic	66, 107	102, 167
Distributed inductance and capacitance	31	53
Diversity reception	150	248
Dummy antenna	152	251
Dynamotors	93	144
Effective a-c resistance	32	54
Electro-mechanical power supplies	92–94	144
Electron, the	33	55
Electron-coupled oscillators	99	153
Electron gun	162	259

	Paragraph	Page
Electron-ray tuning indicator	167	269
Emission, electron	33	55
Facsimile	136	223
Fading	150	248
Feedback	54	88
Feeders:		
Nonresonant	145	238
Resonant	144	235
Filters:		
Band-elimination	26	43
Band-pass	26	43
High-pass	26	43
Low-pass	26	43
Rectifier	89	137
Frequency:		
Bands	3	2
Distortion	66	102
Intermediate	75	117
Multipliers	107	167
Frequency modulation:		
Capabilities	135	222
Discriminator, the	132	206
Limiter, the	131	204
Methods	129	201
Phase-modulated circuit	134	212
Reactance-tube circuit	133	208
Full-wave rectifier	88	135
Gain control in amplifiers	64, 65	101
Grid-leak detection	52	85
Ground wave	149	244
Half-wave rectifier	88	135
Harmonics	3	2
Hartley oscillator	99	153
Headsets	16	28
Hertz antenna	139	230
Heterodyne detection	56	89
High-frequency transmission	124	192
Horizon distance, v-h-f	155	252
Impedance-capacitance coupling	30	52
Inductance, distributed	31	53
Inductive coupling	30	52
Inductive reactance	10, 21, 22	15, 34, 36
Inductors:		
Adjustable	11	15
Fixed	11	15
Permeability-tuned	11	15
Variable	11	15
Insulators	17	31
Interelectrode capacitance	42	73
Intermediate-frequency amplifiers	75–77	117
Ionosphere	149	244
Keying systems and filters	109	170
Limiter (f-m)	131	204
Linear tank circuit	160	256
Link coupling	110	173
Loading, antenna	143	234
Loop antennas	168	272
Loudspeakers	16	28
Maintenance, preventive	169	273

	Paragraph	Page
Maintenance, test-and-repair	171	274
Marconi antenna	140	232
Microphones	16, 114	28, 179
Microwaves. *See* Very high frequencies.		
Mixers	76	118
Modulation:		
Amplitude	118	185
Degree of	115	180
Frequency	127–136	196
Grid	120	189
High level and low level	118	185
Methods	118	185
Percentage	115	180
Plate	119	186
Power relations	117	184
Screen grid	121	190
Side bands	116	183
Suppressor grid	122	191
Tone	123	191
Multi-element tubes	47	79
Multipliers, frequency	107	167
Mutual conductance	41	72
Neutralization	106	164
Noise limiter	77	122
Ohm's law	6	9
Oscillators:		
Beat-frequency	79	126
Calculations	98	152
Colpitts	99	153
Crystal-controlled	100	156
Electron-coupled	99	153
Frequency of	98	152
Hartley	99	153
Pierce	100	156
Relaxation	165	267
Self-excited	99	153
Tickler-coil	99	153
Tuned-plate tuned-grid	99	153
Oscillograph:		
Amplifiers	166	269
Patterns	164	263
Principle of operation	163	262
Sweep-circuit	165	267
Overtones. (*See* Harmonics.)		
Parallel resonance	24	40
Parasitic oscillations	108	170
Pentagrid converter	76	118
Pentodes	44	75
Phase modulation (f-m)	129, 134	201, 212
Phone detection	50	84
Pierce oscillator	100	156
Piezo-electric crystals	100	156
Plate detection	53	87
Plate modulation	119	186
Plate resistance	41	72
Polarization of radio waves	149	244
Polystyrene insulators	161	258
Power requirements of radio	85	134
Power supplies:		
A-c rectifiers	88	135
Battery	86	134
Electro-mechanical	92–94	144

	Paragraph	Page
Preventive maintenance	169	273
Propagation of radio waves	149	244
Push-pull amplifiers	60	94
Radiation	137, 138, 149	226, 228, 244
Radio compass	168	272
Radio frequencies	3	2
Radiotelephone transmission	113–126	177
Radiotelephone transmitter circuit	126	193
Range beacon systems	168	272
Reactance	10, 21	15, 34
Reactance calculations	22	36
Reactance-tube modulation (f-m)	133	208
Receivers:		
Superheterodyne circuit	75–84	117
Tuned r-f circuits	67–73	106
V-h-f	159	255
Volume control	70	110
Receiving antennas	153	251
Rectifier filters	89	137
Rectifiers	88	135
Regeneration	54	88
Regulators, voltage	95	147
Relaxation oscillator	165	267
Resistance calculations	9	13
Resistance coupling	29	51
Resistors:		
Adjustable	8	10
Color code	8	10
Fixed	8	10
Variable	8	10
Resonance:		
Parallel circuit	24	40
Series circuit	23	37
Saw-tooth oscillations	165	267
Screen grid	43	73
Screen-grid modulation	121	190
Secondary emission	44	75
Self-excited oscillators	99	153
Sense of direction	168	272
Series resonance	23	37
Shielding	72	113
Side bands	116	183
Skin effect	156	253
Skip distance	149	244
Skip zone	149	244
Sky wave	149	244
Standing waves	138	228
Straight-line propagation	155	252
Superheterodyne receiver	75–84	117
Suppressor grid	44	75
Suppressor grid modulation	122	191
Symbols	18	32
Tank circuit principle	25	42
Test-and-repair maintenance	171	274
Tetrodes	43	73
Tickler-coil oscillator	99	153
Transconductance	41	72
Transformers	12	18
Transformer coupling	27, 28	47, 48
Transmission lines	145	238

	Paragraph	Page
Transmitters:		
C-w	101–112	161
Radiotelephone	113–126	177
V-h-f	160	256
Triode:		
Biasing methods	39	68
Characteristic curves	40	70
Operation	37	62
Plate loads	38	66
Tuned circuits	19	33
Tuned r-f receiver	67–73	106
Tuned-plate tuned-grid oscillator	99	153
Tuning indicator, electron-ray	167	269
Circuit elements	156	253
Concentric-line tuned circuits	158	255
Propagation	155	252
Receiver	159	255
Transmitters	160	256
Vacuum tubes	157	254
Vacuum tubes:		
Beam-power	46	78
Cathodes	33	55
Characteristic curves	36, 40	61, 70
Duplex-diode	47	79
Mixers	76	118
Multi-element	47	79
Pentagrid converters	76	118
Pentodes	44	75
Rectifiers	88	135
Transmitter	105	164
Tetrodes	43	73
Triodes	37–40	62
Variable-mu	45	76
Voltmeter	57	90
Variometers	11	15
Velocity of radio waves	138	228
Very high frequencies:		
Antenna systems	161	258
Vibrator supplies	91	142
Voltage dividers	91	142
Voltage regulators	95	147
Voltmeter, vacuum tube	57	90
Volume control	70	110
Wavelength	4, 138	4, 228
Wave traps	26	43

WAR DEPARTMENT TECHNICAL MANUAL

TM 11-455

This manual supersedes TM 11-455, 17 July 1941

RADIO FUNDAMENTALS

WAR DEPARTMENT • 22 MAY 1944

United States Government Printing Office

Washington : 1944

WAR DEPARTMENT,

WASHINGTON 25, D. C., 22 May 1944.

TM 11-455, Radio Fundamentals, is published for the information and guidance of all concerned.

[A.G. 300.7 (28 Dec 43).]

BY ORDER OF THE SECRETARY OF WAR:

G. C. MARSHALL,
Chief of Staff.

OFFICIAL:

J. A. ULIO,
Major General,
The Adjutant General.

DISTRIBUTION:

As prescribed in paragraph 9a, FM 21-6, IR 1, 2, 4, 5, 7(3); I Bn 1-3, 5-8, 11, 17-19, 44(5); IC 1-8, 11, 17-10, 44(19).
IR 1: T/O & E 1-112, Hq, Bomb Gps, Hv or M; 1-252S, Hq Rcn Gp (Spec); 1-752S, Hq Photo Gps, Mapping (Spec).
IR 2: T/O 2-11, Cav Regt, H; 2-71, Cav Regt, Mecz.
IR 4: T/O 4-51, CA Regt (155 mm Gun) (Mbl); 4-61, CA Regt, HD, Type A.
IR 5: T/O & E 5-511S, Engr Boat and Shore Regt.
IR 7: T/O 7-31, Inf Pchst Regt.
I Bn 1: T/O & E 1-47, Fighter Control Sq; 1-50-1S, Hq & Hq Sq Fighter Comd (Spec); 1-67, Night Fighter Sq; 1-100-1S, Hq & Hq Sq, Bomber Comd (Spec); 1-110-1, Hq & Hq Sq, Bomd Wg; 1-117, Bomb Sq, Hv; 1-127, Bomb Sq, Med; 1-267 Tactical Rcn Sq; 1-310-1, Hq & Hq Sq, Tr Carr Wg; 1-412, Hq & Hq Sq, Sv Gps; 1-547, Air Support Conth Sq; 1-550-1, Hq & Hq Sq, Air Def Wg; 1-637, Wea Rcn Sq, M; 1-687S, 8th Airways Sq Sp; 1-757, Photo Rcn Sq; 1-758, Photo Mapping Sq; 1-759, Photo Charting Sq; 1-760-1, Hq & Hq Sq, Photo Wg; 1-767, C Mapping Sq; 1-779, Photo Tech Sq; 1-800-1S-RS, Hq & Hq Sq, AFRS; 1-800-1S-2T, Hq & Hq Sq, AF SP; 1-801-1, Hq & Hq Sq AF Comp Comd; 1-987, Emergency Rescue Sq; T/O 1-137, Bomb Sq, L.
I Bn 2: T/O & E 2-2S, Cav Rcn Sq; Mecz Sep Sq Sq in Armd Div.
I Bn 3: T/O & E 3-25, Cml Bn, Mtz.
I Bn 5: T/O & E 5-15, Engr C Bn.
I Bn 6: T/O 6-75, FA Obsn Bn.
I Bn 7: T/O & E 7-15, Inf Bn; 7-25, Armd Inf Bn.
I Bn 8: T/O & E 8-75, Med Bn, Armd.
I Bn 11: T/O & E 11-15, Sig Bn; T/O 11-95 Sig Opn Bn.
I Bn 17: T/O & E 17-85S, Tank Bn, Med (Spec).
I Bn 19: T/O & E 19-55, MP Bn.
I Bn 44: T/O & E 44-135, AAA LS Bn.
I C 1: T/O & E 1-47, Fighter Control Sq; 1-312, Hq, Tr Carr Gp; 1-727, Radar Calibration Det.
I C 2: T/O 2-10-1, Hq & Hq Tr, Cav Brig (Horse); 2-79, Support Tr, Cav Regt Mecz; T/O & E 2-22, Hq & Hq Tr, Cav Gp, Mecz; 2-27, Cav Rcn Tr (Mecz).
I C 3: T/O & E 3-17, Wpns Co, Cml Mtz Regt or Cml Mtz Bn, Sep; 3-267, Cml Smoke Gen Co.
I C 4: T/O 4-104, CA Btry, Mine Planter (Cable Ship).
I C 5: T/O & E 5-16, Hq & Hq Serv Co, Engr C Bn; 5-87, Engr L Pon Co; 5-192, Hq & Hq Co, Engr C Gp; T/O 5-227, Pcht Co, A B Engr Bn; T/O & E 5-218, Co, Armd Engr Bn (Bridge); 5-500, Engr Serv Orgn.
I C 6: T/O & E 6-10-1, Hq & Hq Btry, Div Arty, Inf or Mtz Div & Hq & Hq Btry, FA Brig; 6-12, Hq & Hq Btry, Mtz FA Gp; 6-26, Hq & Hq Btry, Mtz, FA Bn (Trk-Dr or Tr-Dr); 6-29, Sv Btry, Mtz FA Bn, 105 mm How, Trk-D; 6-36, Hq & Hq Btry, Mtz FA Bn, 155 mm How or 4.5 Gun Trk-Dr; 6-39, Sv Btry, Mtz FA Bn, 155 mm How, or 4.5 Gun Trk-Dr.
I C 7: T/O & E 7-19, Inf AT Co; T/O 7-37, Inf Rifle Co, Pcht Bn.
I C 8: T/O & E 8-27, Med Collecting Co Sep; T/O 8-37, A/B Med Co.
I C 11: T/O & E 11-7, Sig Co, Inf Div; 11-500, Sig Sv Orgn; 11-517S, Sig Co Spec; 11-537S, Sig Co, Engr Sp Brig; 11-557, A/B Sig Co; 11-587, Sig Base Maint Co; 11-592, Hq & Hq Co, Sig Base Dep; 11-597, Sig Base Dep Co; T/O 11-47, Sig Tr, Cav Div; 11-77, Sig Rad Int Co; 11-97, Sig Opn Co; 11-107, Sig Dep Co; 11-127, Sig Rep Co; 11-200-1, Hq, Sig Sv, A; 11-327; Sig Port Sv Co; 11-547, Sig Ctr Team.
I C 17: T/O & E 17-22, Hq & Hq Co, Armd Gp; 17-98S, Sep Tk Co, Hv.
I C 18: T/O & E 18-10-1, Hq & Hq Co, TD Gp; T/O 18-27, TD Co.
I C 19: T/O & E 19-36, Hq & Hq Det, MP Bn, A.
I C 44: T/O & E 44-10-1, Hq & Hq Btry, AAA Brig; 44-12, Hq & Hq Btry, AAA Gp; 44-117, AAA Gun Btry, SM; 44-127, AAA Auto Wpns Bn, SM; 44-136, Hq & Hq Btry, AAA SL Bn; 44-327, AA Bln try Btry, VLA.

For explanation of symbols see FM 21-6.

CONTENTS

		Paragraphs	Page
Section I.	Introduction to radio	1–5	1
II.	Circuit elements and symbols	6–18	9
III.	Tuned circuits	19–32	33
IV.	Vacuum tubes	33–48	55
V.	Vacuum-tube detectors	49–57	83
VI.	Vacuum-tube amplifiers	58–66	91
VII.	Tuned radio-frequency receiver	67–74	106
VIII.	Superheterodyne receiver	75–84	117
IX.	Power supplies	85–95	134
X.	Vacuum-tube oscillators	96–100	149
XI.	Continuous-wave transmitters	101–112	161
XII.	Modulated transmitters	113–126	177
XIII.	Frequency modulation	127–136	196
XIV.	Antennas, radiation, and wave propagation	137–153	226
XV.	Very-high-frequency communication	154–161	252
XVI.	Cathode-ray tube	162–167	259
XVII.	Radio direction finding	168	272
XVIII.	Care and maintenance of radio equipment	169–172	273

Appendix

I.	Radio abbreviations	278
II.	Glossary of radio terms	281
III.	Summary of formulas	307
IV.	RMA radio color codes	309
V.	Multiples and submultiples	311
VI.	Kilocycle-meter conversion	312
VII.	Inductance-capacitance product values	317
VIII.	Squares and square roots	320
IX.	Bibliography	321
X.	Review questions	322
Index		331