1933

Official Radio Service Manual

Vol. No. 3

Official Directory

Commercial Radio Receivers

Full Radio Service Guide

1933

◆ Official ◆

Radio Service Manual

Complete Directory of all
1932-1933 Radio Receivers

FULL RADIO SERVICE GUIDE

Vol. No. 3

HUGO GERNSBACK
Editor

CLYDE J. FITCH
Associate Editor

GERNSBACK PUBLICATIONS, INC.
PUBLISHERS
96-98 PARK PLACE
NEW YORK

SEND NO MONEY--

Clip and mail to us coupon below. We will send you either one or both books through the Express Company for your inspection. You have the privilege of keeping or returning them.

If you want to have a complete set of all Radio Diagrams, both manuals should be in your file.

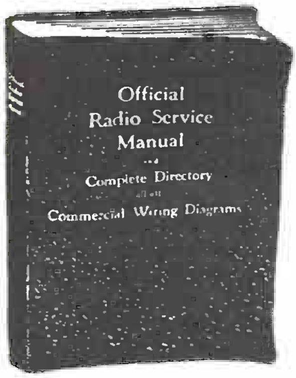

Volume I, 1931 *Edition*

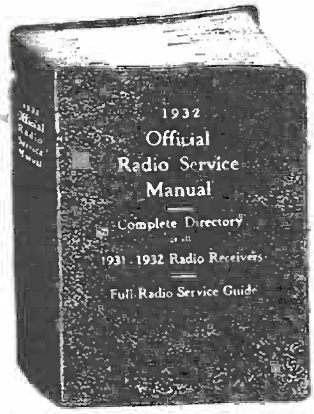

Volume II,. 1932 *Edition*

Both volumes of the OFFICIAL RADIO SERVICE MANUAL will give you the most complete set of circuit diagrams ever published for the Radio Industry. Every Radio Service Man and Dealer should have them available for immediate use in his business. Professional set-builders and amateurs will find them instructive and helpful.

Briefly outlined below are the "high spots" that are to be found in the 1931 Manual—the first complete radio service manual ever to be published. Over twenty-seven thousand copies of this edition were sold to members of the radio industry. This assures you of its importance to those engaged in radio and how valuable it is to them.

Partial Contents

Wiring diagrams of radio sets manufactured since 1927, and many earlier ones of which there is any record elsewhere.
650 pages of radio-servicing material.
Complete course of instruction for Radio Service Men, dealers, manufacturers, jobbers, set builders and amateurs.
(Here are but a few of the subjects covered in the special course of instruction).

- Amplifiers
- Antennae
- Automotive Radio
- Condensers
- Detectors
- Eliminators
- Meters
- Power-Supply Systems
- Radio Phonograph Equipment
- Resistors
- Short-Wave Sets
- Speakers
- Tubes

$4.50 Complete with Supplements

650 PAGES
(Complete with Supplements)

Over 1,500 Diagrams, Charts and Illustrations

Flexible
Looseleaf
Binder,
9 x 12 inches.

Get Supplements FREE with the NEW 1932 MANUAL

There is so much new material in this Manual, that a Service Man or dealer would be lost without it when called to service a set. Information about new models which have been on the market only a few weeks are contained in this book. The 1932 Manual makes the service kit complete.
The 1932 Manual contains a Full Radio Service Guide and a Complete Directory of all 1931-1932 Radio Diagrams, also models of older design. Everyone in the Radio business should have a copy. Send for yours today!

Partial Contents of Volume II

A step-by-step analysis in servicing a receiver which embodies in its design every possible combination of modern radio practice; it is fully illustrated and thoroughly explained. It is the greatest contribution to the radio service field.
Chart showing the operation of all types of vacuum tubes, whether new, old or obsolete. An exclusive resume of the uses of the Pentode and Variable-Mu Tubes and their characteristics.
Complete discussion of the superheterodyne and its inherent peculiarities. Also a special chapter on tools used on superheterodyne circuits. Schematic diagrams and circuits complete with color codings.
Important chapters on commercial aircraft radio equipment; new data on commercial short-wave receivers and converters.
Servicing and installation of public address systems and talking machine equipment.
Standardized color-codings for resistors.
Operation of old and new testing equipment; tube voltmeters, output meters, oscillators and aligning tools.
A full section on Midget radios—their design, circuits, and types. How to service them most economically.
Hundreds of schematic diagrams of older radio receivers which have never been published.
Blank pages for recording notes, diagrams and sketches; these pages are transferable to any part of the book.
Coupon page for free questions and answers.

$5.00 Complete with Supplements

OVER 1,000 PAGES
(Including Supplements)

Over 2,000 Diagrams, Charts and Illustrations

Flexible, Looseleaf Binder, 9 x 12 inches.

CLIP COUPON AND MAIL TODAY!

MAN

GERNSBACK PUBLICATIONS, Inc.
96-98 Park Place, New York, N. Y.

Please send me for FREE inspection, the books I have checked below. I understand I may examine them carefully, and should I decide to keep them, I will pay the full cost, plus the few cents for carrying charges. This offer is good only in the U.S.A.

[ ] Volume I, 1931 Manual, with Supplement, $4.50.
[ ] Volume II, 1932 Manual, with Supplements to be mailed Free every 60 days, $5.00
[ ] BOTH BOOKS FOR $9.00.

Name ....

Address ....

City .... State........................

DIAGRAMS AND TEXT WHICH APPEAR IN THE 1933 OFFICIAL RADIO SERVICE MANUAL ARE ENTIRELY DIFFERENT AND DO NOT APPEAR IN EITHER OF THE TWO PREVIOUS VOLUMES, NUMBERS I AND II.

INTRODUCTION

THE 1932-1933 edition of the OFFICIAL RADIO SERVICE MANUAL has been carefully prepared after a thorough study of the needs of the thousands of radio Service Men who have subscribed to the previous editions. These Service Men have gratefully expressed their appreciation of the first two manuals and their supplements and have asked us to continue the good work and publish as much more service information as possible—not only diagrams and electrical values of parts, but also service instructions, chassis layouts, and complete information as obtained from the manufacturers of radio sets. This latest edition has been prepared with this in view, avoiding duplication as much as possible. The commercial diagrams reproduced in this book are new; that is, they have not appeared in the previous editions. The complete diagram index, in the back of this book, however, includes all the diagrams published in all of the official service manuals so that the Service Man will be able to locate every diagram easily.

The outstanding difference between Vol. 3 and the previous two volumes is that it contains more "meat," or practical information necessary to the correct running of a service shop. This material was submitted by thousands of Service Men to RADIO CRAFT; it is compiled in orderly fashion and indexed for ready reference. It occupies about half the book, the remainder being taken up by the commercial diagrams and service information.

The large amount of practical service information contained in this book makes it a veritable encyclopedia of radio—more complete than a college course on the subject. One cannot study it diligently without becoming thoroughly informed in all branches of radio and radio servicing, whether he is just beginning or is well advanced in the business of servicing. It is mainly the *practical* and *business* side of servicing that is given, with only as much theory as is necessary to explain the practice.

Knowledge is the shortest route to successful servicing. If you cannot carry all the information in your head, the next best thing is to know where to find important data. The editors have tried to make the *Official Radio Service Manual*, Volumes 1, 2, and 3, the library of all service information, and sincerely hope that they have been successful.

The editors wish to voice their thanks to the many radio set manufacturers who were so kind as to send service data regarding their sets to us, and who cooperated in every way possible to make this great volume a success. This spirit of cooperation, unknown two years ago, has been highly appreciated by the editors, and has made their work a great deal easier.

—THE EDITORS.

CHAPTER I

General Service Information

This Chapter is Especially Prepared for the Beginner, but it Contains Information of Interest to All Service Men.

How To Become a Service Man

WE are in receipt daily of dozens of letters from former set builders and experimenters who desire to become service men, and who wish to know how to go about it to enter the ranks.

"Poets are born, not made"; but it requires a good deal of experience and hard work to become a good service man. Yet any intelligent young man, who has a good radio foundation, and knows something about radio and the use of its instruments, should have no trouble in becoming a first-class service man.

The first requisite is that he must have a fundamental knowledge of radio and circuits, with actual experience in the handling of meters and various other radio instruments. The theoretical knowledge of radio is most important; without it, no real results can be achieved because, nine times out of ten, a service man so handicapped will not be able to delve into the intricacies of the radio circuit.

The service man must be familiar with tubes, their characteristics, their amplification-factors, and practically everything that is to be known about tubes. Of course, there are on the market today a number of testing sets by means of which it becomes a simple matter to test the characteristics of the tubes—merely by plugging them into the socket of the testing set. This makes the work very much easier; but many service men do not understand the fundamental tube characteristics, with which they must be familiar for a better insight into radio receiver operation.

We can think of nothing better as a practical course for an embryo service man than to get hold of some discarded old radio sets, take them apart and put them together again. This practice will be most valuable; because in the dissection and building of radio sets a multitude of practical points are discovered, which not ten volumes of radio manuals can possibly give.

Nine times out of ten, a radio set that is to be serviced has failed, not for any radio reason at all, but because of some mechanical defect. Perhaps the most usual cause of failure of a radio set is a burnt-out transformer; that, of course, requires only a replacement of the transformer which, as a rule, proves to be a simple job.

Frequently, other failures have to do with a loose connection within the set, which may or may not be located readily. Here is where a testing set, equipped with the right meters, will save a tremendous amount of time; and, if the service man knows something about the hook-up (as he should), then the open circuit can be traced rapidly as a rule.

The sources of peculiar noises are not located so readily, unless the service man has had some experience and knows how to differentiate the different sounds which come out of the loud speaker. There may be heard high whistles due to faults in the radio-frequency circuit. There may be grinding noises due to loose contacts. And there may be "microphonic" noises, due to microphonic tubes, making poor contacts and thus becoming doubly microphonic.

All of these points can be found out only by actual practice. Reading books and instructions may help, but it is not a sufficient education in itself, because every trouble has not the same cause. Very frequently there develop freak troubles which it takes a certain amount of native ingenuity to explain. Practically every service man will tell you that, in a number of set experiences, it took him a long time to classify the trouble; and even a good experienced service man, who has been at it for a long time, is likely once in a while to stumble across such a "sticker" that may take anywhere from half an hour to several hours to locate.

The service man most successful in the end is the one who is best informed of the various circuits and characteristics of different sets; the service man who owns a versatile testing equipment that he understands thoroughly; the service man who is a good mechanic and a good electrician as well.

And, finally, one of the most important attributes of a successful service man—that is, one who makes more money than his fellows—is that he does careful and clean work, and is not content simply with a rush job. We have seen too many service men who, instead of soldering an important connection, were content to wrap a wire around a piece of metal and let it go at that, or who did not take the trouble to sandpaper the tube prongs which they knew were in need of cleaning. Such service men are a menace to the industry and will never get anywhere; because in the end they fool only themselves.

Sloppy, careless work has never benefitted anyone because, sooner or later, a set thus serviced will get out of order again and the blame will fall on the man who "fixed" it last.

And finally, a good service man does not take advantage of the ignorance of his customer. Too many service men, so called, are in the habit of trying to sell their customers all sorts of "tidbits" to "improve" a so-called "sick" set, in their desire to make a few dollars. The public is becoming wise to such tactics, and is beginning to shun men of this sort. Sooner or later such men forfeit the good will of their customers, and in the end, the real loss will be their own.

What Service Men Should Know

A GOOD deal of agitation can be caused by the misunderstanding of a few simple words. Take, for example, the present discussion about mathematics for the Service Man. Many individuals have advocated studies of varied sorts for the practicing Service Man, and among the suggestions has been advanced mathematics. Just how much mathematics does the Service Man require? Does he need to study that subject at all?

In order to reply to the above questions, it is first necessary to analyze the function of the Service Man. Primarily, his work consists of an effort to restore a defective receiver to its original state of high electrical efficiency; this is repair work pure and simple. However, many other fields of activity have been suggested for the Service Man; the most prominent of which is sound installation—the installation of public-address systems and of remote control. Hence we must, of necessity, segregate such work into two categories: (1) maintenance service; and (2) design work. We apply the word design to the installation of sound systems and kindred work; because each installation is in a class by itself, presents its own complications and requires individual solution.

As to repair work, we must realize that the term "repair" is not adequate to describe the efforts necessary to maintain successful operation; it is not a true expression of the duties involved but, for the want of a better term, we shall henceforth designate all repair as maintenance. Repair maintenance is carried out along certain lines. While the extent of the equipment employed is not definite, the subject and the object are concrete items; the first is a defective receiver, and the second is its restoration to its original electrical condition. With any one receiver at hand, no matter how many the number of faults, the work necessary comprises diagnosis of the trouble, location of the defective part or system, and finally replacement.

With respect to the diagnosis of trouble, we have three states: the first is a unit irreparably damaged; the second is an incorrect device; and the third is an incorrect operating condition or adjustment. Assuming correct diagnosis, rectification of the first state means the replacement of the defective device with another (invariably available from some source or other, since that receiver is a commercial product and replacement parts can be secured). Remedy of the second state, once again, entails replacement with the correct device originally designed for that part of the receiver system. The use of the incorrect device is due to an error on the part of some particular individual, and can be corrected in a simple manner. The third state is somewhat more complicated; in that it is necessary first to know the proper operating condition and, in the second place, to make the needed corrections, be they mere adjustments or more tedious replacement.

If we first concern ourselves with the replacement problem, the possibility of extensive calculations, of one sort or another, on the part of the Service Man is entirely lacking. It is true that it is frequently necessary to determine the correct value of resistance necessary to produce a certain voltage drop in the plate circuit, the filament circuit or the grid circuit; but we feel safe in stating that such work is neither laborious nor does it involve higher mathematics. If the unit desired is a fixed capacity which is damaged, computation is obviated by reference to general text matter, wherein may be found the average values of capacity employed in different parts of a radio receiver. As a matter of fact, the experienced Service Man need not spend much time ascertaining the capacity value suitable as a by-pass unit in the plate circuit of a detector tube, across a voltage-divider section, in the plate circuit of an R.F. amplifier tube, etc. All radio receivers, commercial and otherwise, bear a distinct resemblance to each other. While the exact design of the receiver may differ from the usual, there is a great deal of similarity in by-pass circuits, as to the values of the radio-frequency chokes and of the by-pass capacity. Hence, extensive calculation on this score is unnecessary.

If we proceed to inductanees and variable capacities suitable for tuning, few Service Men take upon themselves to replace a tuned radio-frequency transformer, which has been found defective, with one of their own manufacture. The design of the modern radio receiver is quite critical, particularly when tuned radio-frequency transformers and their associated tuning capacities must be replaced. The most logical solution is replacement with another coil or set of coils, or another tuning capacity or a gang of condensers, secured from the manufacturer. Once again, the need for extensive computation is absent.

Proceeding further in the receiver, the replacement of defective audio-frequency transformers, choke coils, coupling resistors and output transformers does not require calculation on the part of the Service Man. All of the design considerations have been taken care of by the manufacturing organization and its engineering personnel. Thus, the need for a mathematical education is not apparent while carrying on certain forms of Service Work.

Now, as to correction or adjustment of operating conditions, such work must conform with certain definite specifications, either those secured from the manufacturer who made the receiver or those of the manufacturer who made the tubes. In either case, the adjustments are made according to the indications upon testing devices, such as voltmeters and current meters. Contact of such type when adjusting a radio receiver seldom necessitates the introduction of additional resistances in order to secure the correct operating potential. It means, no doubt, the adjustment of a variable-tap resistor or the changing of the tap contacts, but seldom the removal of one resistor and the insertion of an entirely different component which would necessitate computation of the currents and voltages in a system. The only possible work where computation may be necessary is the readjustment of an output circuit to accommodate a new lot of loud speakers or to provide for the addition of speakers. Under the circumstances it is difficult to find the occasion where higher mathematics is involved in radio repair work, and we are heartily in accord with the man who states that it is unnecessary to be familiar with trigonometry, quadratic equations or integral calculus, to be able to repair a radio receiver.

It is, however, impossible to dismiss all calculation simply because higher mathematics is not required. We can dismiss mathematics; but arithmetic as we understand it (meaning simple addition, subtraction, multiplication, ratio, squaring, and square root) is found in every-day life. Perhaps the need for such simple forms of computation does not appear necessary upon the surface; but the full interpretation of Ohm's law involves each form of arithmetic mentioned above. Who can deny that the practicing Service Man must be familiar with the various forms of Ohm's law? Many men are familiar with the three general equations for resistance, voltage and current in D.C. circuits, but fall short when these equations must be applied.

Mathematics in radio is not essential to the comprehension of the subject. It is possible to state all laws in words; but solution of any problem entails computation and this necessitates a knowledge of simple arithmetic. While we advise a study of theory, we take this occasion to state that a thorough study of the principles underlying radio communication is not necessary in order to repair a receiver in the proper manner. We do, however, say that certain principles must be known: the practicing Service Man must be familiar with the law of series and parallel resistances; he must be familiar with the law pertaining to voltage drop in series and parallel D.C. circuits. It is of course possible to memorize these laws; but their application is impossible unless the individual is familiar with each of the above mentioned forms of arithmetic.

Squaring and square root are found in the simplest of radio problems—the determination of the permissible current through a resistance rated at a certain value in ohms and a certain value in watts dissipation. Ratio or percentage is necessary when solving for the voltage drop across parts of a voltage divider. Reciprocals are necessary when solving for the joint resistance of a number of unequal resistances in parallel. Perhaps you feel that paralleled resistances are seldom experienced in practice; that is true in a way, but consider the shunts across current meters. Addition, subtraction, multiplication and division, squaring and square root are found in such a simple procedure as the determination of a replacement resistor, when the available voltage, the required voltage and the current flow are known but the required resistance is unknown. The same forms of computation are required when solving for a voltmeter-multiplier resistance, and who can say that the purchase of a multiplier, rather than the improvisation of one, is justified because of lack of knowledge? Many radio problems have practical solutions that require no calculation, but there are many other problems—simple problems to say the least—that require a knowledge of arithmetic.

Such knowledge should be instinctive. It is a matter of counting apples, the cost of a job, the discount allowed, the cost of the time spent upon a job. There is no need to consider power factor, the sine of an angle, the impedance of a transformer's primary, the cosine of an angle or the phase relation in a certain circuit; but there is a distinct need to know arithmetic in its various simple forms. Many complex radio problems can be and have been resolved into simple rules, at least sufficiently simple to provide a practical solution; but the actual solution is impossible if the simple forms of arithmetic are not understood. We have been in contact with many men who could not multiply fractions, who could not select the resistors for a voltage divider, because they could not solve ratio or percentage problems. Make a study of simple arithmetic and if you can add, multiply, subtract, divide, solve for ratios, percentages, squares and square roots, you have all of the mathematical knowledge you require to carry on successfully in radio service and maintenance work.

The technical education a man requires depends upon the work he contemplates doing; the more technical the work, the more technical must be the education. The radio receiver placed in a home is not selected according to the size of the home; it is a finished product, complete in itself. A sound installation, on the other hand, must be selected to fulfill a certain requirement. Output circuits must be designed to accommodate a predetermined number of loud speakers. The wiring from the amplifier to the speakers is more complex than that found in the average home. Versatility of operation presents a special problem in public-address systems. The solution of these problems requires more extensive radio knowledge or, should we say, audio knowledge. Such knowledge includes more complex computations, the design of "pads" and other attenuating circuits. Such work is entirely beyond the scope of the maintenance man; hence he need not know logarithms. Simple arithmetic is sufficient for him.

◆

The Junior Service Man

MANY practical radio tests may be made by Service Men without using expensive test equipment. Of course, competent Service Men carry first-class equipment for elaborate tests; but oftentimes the trouble has been located before using the test equipment. Then, too, the average experimenter does not desire to invest a comparatively large sum of money in test equipment, just for his own use.

It is not intended that the reader shall gather from this article that accurate, high-class test equipment is not desirable; but many tests can be made, with a great measure of accuracy, without it. Of course, it is impossible to read the value of a tube without some sort of a tube tester. But a bad tube can be eliminated from a radio set by the process of elimination; through using a tube known to be good in each socket of the set.

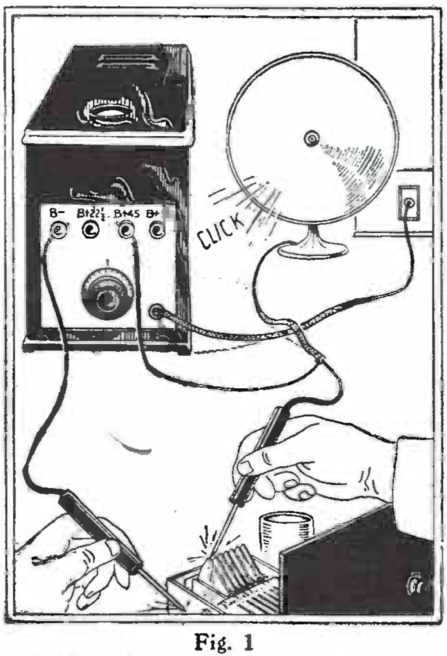

Fig. 1
The "B" power unit, in connection with a speaker, forms a continuity tester. If the unit is in the receiver chassis, the leads from it may still be used—if the tester knows the circuit he is working with.

For instance, we have a home-built battery or eliminator set of the tuned-radio-frequency or regenerative type, which is not operating. The speaker is dead. On touching your finger to one side of the grid leak of the detector tube, there will be a continuous roar in the speaker—if the audio channel is O. K. This simple test shows that the detector tube and the two audio tubes are all right. It also indicates that the two audio transformers are not burned out. It gives a test of the speaker, for if the speaker windings were open there would be no sound. So it is seen that this one simple test will give a rough idea of the condition of about half the apparatus in the set. Then it also gives a chance to change tubes. If the roar is loud and clear in the speaker then the audio tubes are in good condition. Place a doubtful tube in the audio side and try it again—if there is no sound, or it is very much weaker, the tube should be discarded.

Testing the First Stages

If we have disposed of the detector and audio stages, and still there is no reception (taking for granted, of course, that there is broadcasting on the air) attention can be given to the radio-frequency side of the circuit. If local stations are known to be in operation, remove the aerial lead-in from the set's "antenna" post, and carry the end of the wire into the set to the stator (which is the part of the tuning condenser that does not turn) of the first variable condenser, whether single or ganged. Set the dials for a local station and listen for signals. If the set is still dead, move the lead-in wire to the second and to the third. In a large majority of the cases the broadcasting will come through on the stator of at least one of the condensers.

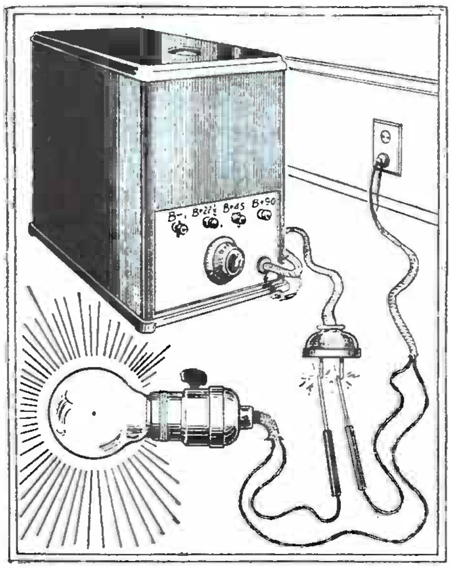

Fig. 2
The electric lamp and house current form a tester which should be known to every Service Man; when the lamp lights, there is a short or a low resistance across the leads. Again—first know what you are doing, when you apply the test.

If on placing the lead-in wire on the first condenser, signals are received, yet none are received when the lead-in is placed on the antenna post, an open circuit is indicated between the antenna post and the first coil (the antenna coupler) which is of similar design in most sets to the other two radio-frequency coils) or in the primary winding of this coil. The experimenter has learned, at least, that the set from that point clear to the speaker is in operating condition. The trouble is thereby isolated to a very small section of the set.

Suppose, then, the experimenter has no meters, and even no headphones, to make a continuity test of this part of the set; a loud speaker may be used. Place one of the speaker tips, after disconnecting both from the radio set, on a battery (or eliminator) lead, and then take a wire from the other side of the circuit. When the other tip of the speaker and this wire are touched together, there will be a sharp click in the speaker. If an eliminator is used, it is advisable to keep the set turned on and the power output hooked to the set; as using this unit without a load imposes a heavy strain on the condenser bank and might cause a burn-out.

It is readily apparent that any conductive material placed between the two test leads will cause a click in the speaker; indicating the continuity of the object being tested. Place one tip on the antenna post and the other on the ground; a click will indicate that the primary winding of the antenna coil is intact. Placing the tips on the rotor and stator plates of the variable condensers should give a loud click. If this surprises the reader who knows that the plates are surely separated by air, a glance at the diagram of your set will show that these condensers are placed across the secondaries of the radio-frequency transformers and of the antenna coil; so that in reality you have just made a test of the secondaries of these coils. With a diagram of the circuit of the set, it should not be hard to figure out just when you should get clicks with this continuity tester and when you should not.

A "B" power unit can be tested properly only with a high-resistance voltmeter (about a thousand ohms per volt.) But the experimenter can get an indication whether there is any current flowing, by momentarily placing the speaker tip on "B—" and applying the other tip alternately to detector, intermediate and power amplifier taps. If current is flowing the fact will be shown by a click. If the power unit is of the type using a Raytheon ionized-gas rectifier ("BH") tube, and there is any question that the tube is operating, merely place your hand upon it after it has been turned on for ten minutes; if it is warm, you may be sure that the tube is operating, even though no click is heard from the speaker.

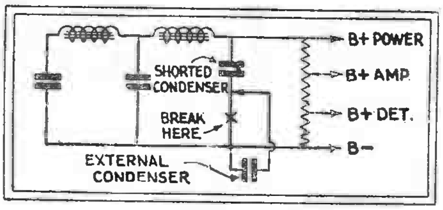

Fig. 3

A shorted unit in a condenser bank need not make a total loss of the whole unit. Put the replacement on the outside.

Another simple test of the efficiency of an antenna, when the set in question is known to be in good condition and the tubes are all right, but the volume is weak: place the finger on the antenna post of the set. If there is an increase in volume, this indicates that the antenna is too short or is defective. Make changes in it until there is no change in volume when the finger is placed on the antenna post.

Here is a test for a "B" power unit which can be made with material found in every workshop. Hook up a 25-watt electric light bulb in series with two leads; so that, when it is plugged into the house line, the lamp will light only when the two leads are touched together. Place these two leads on the connector of the eliminator (the part that plugs into the house socket) and, if the bulb lights with anything near normal brilliancy, it indicates that a section of the condenser bank has burned out. The cord should be examined first, however; for a short anywhere across the line will cause the lamp to light. If it lights and the trouble is in the condenser bank, the advanced experimenter will be able to locate the defective section in the following manner. Take the soldering iron and unsolder each condenser lead until the lamp goes out; the lead just disconnected goes to the burnt-out section. When this is found, merely place a new condenser of two microfarads capacity, in series in this lead. Repairing in this manner saves the necessity of taking out the whole bank. If the circuit of the filter is available, place in this lead the capacity that the circuit calls for; otherwise, use from two to four microfarads.

Thus it will be seen, many tests can be made with the degree of accuracy necessary for the home workshop without expensive equipment. By using a little thought the different parts of a radio set and its power supply may be checked quickly, accurately and completely.

* * *

Breaking Into Service Business

MANY young men, who have taken a correspondence or other technical course in radio, would like to cash in on the knowledge thus gained, and, at the same time, acquire the necessary experience for advancement in the field. It is for those men that this is written; and my advice to them is, "Go into the service business."

Now you are no doubt asking: "Just what opportunities does the radio service business afford?" Well, I'll tell you:

(1) You may start with very little capital; about one hundred dollars should make a nice start.

(2) You may do the work right in your own home, making the overhead small.

(3) The pay is good, about $75 to $100 per week after you have worked up a fairly large clientele.

(4) The experience you get is first-hand, every job presenting a problem, and it is your business to solve the riddle.

(5) You are practically master of your own time, giving you opportunity for study or research to improve your technical knowledge.

(6) Finally, it will give you a thorough business training that will be most useful to you as time goes on.

There are many ways of getting started in the radio service business. You probably have ideas of your own along this line; but the methods I am about to relate have given very satisfactory results in a town with a population of 20,000.

First of all: when entering any business, you've got to let people know you are doing the work, and that they can depend upon you to do it. Of course you can "broadcast" this news around among your friends and relatives, and get some work; but this is not usually sufficient to work up a large clientele. You must advertise.

At this stage of your business career, your advertising must be as effective as it is possible for you to make it. Usually, experiment at this stage means waste of money. I have found a two weeks' advertising campaign, as follows, to be best.

Take one street each day for a week; walk the full length of the street, up one side and back the other, copying the numbers from the houses having aerials. Each evening you can look up the names of the persons living in those houses from the city or telephone directory. At the end of the week you will have a large mailing list, 100% of whom are radio users.

The next week you may send a typewritten post-card, similar to that reproduced below, to your mailing list. None of these cards will fall into the hands of anyone not having a radio set. Everyone receiving one will, sometime at least, be interested in its message. Therefore these cards should produce very good results.

IS YOUR RADIO WEAK, SICK?

Don't throw it away. I'll put it back on "its feet" with more pep than it ever had. That's my guarantee. I am trained and experienced on all types and models of Radio sets. Call me NOW!

(Name and Address)

After you have obtained some results from the above method, a newspaper advertisement should be run. One in the classified section of your newspaper, giving a statement of the work you do and including a suggestion that the set owner call you the next time his radio goes bad, should give good results with low cost.

Apply your own ideas to your advertising, with the idea of making it original. It is all right to copy or take ideas from other ads, once in a while; but you will probably find that an original piece of "copy," with some "punch" behind it, will give much better results.

Now, a few words about conducting your business. Charge a reasonable rate, but don't work for nothing; don't charge less than $1.00 per hour, and not more than $2.50 per hour. The rate must depend upon your overhead expenses, living expenses in your particular town, and [illegible] rate of other radio men in the same town. Do not try to get work by price-cutting, unless you are in business for the fun of it. People are willing to pay good money, as a rule, for good service.

If you can give them better and more efficient service than the other fellow, your time is worth more than his. Just remember this: that, if you give the people the kind of service they want, and give it to them consistently, you can't keep the money away.

What Is Service?

"RIGHT or wrong, the customer is right." These seven words sum up the status of service as exemplified by some of the large selling organizations in the country—as a matter of fact, by the majority of large organizations; and we are not limiting our reference to radio stores or to other purveyors of radio sets and accessories.

At first glance, one anticipates a tremendous loss over a period of a year. Yet we find, upon analysis, that the stores operating upon the above-mentioned premise are highly successful; which seems to indicate that the public is not as black as it is painted. Now, this dissertation is intended, not as a discussion of sales policy, but as a means of arriving at a conclusion of fact; which tends to create discussion, whether or not the customer is right or wrong? We are willing to admit at the outset, that in many instances, complaints are premeditated methods of unjustly returning goods unintelligently damaged by the customer. Also that in some cases—a very small percentage of total sales, however—goods are deliberately damaged and returned for credit on the basis that they were damaged when received.

Let us attempt to analyze the radio situation, as applied to complete receivers; because this item constitutes the bulk of sales to individuals who consider radio as a medium of entertainment and are neither radio minded nor technically inclined. It will be best to cite a few examples encountered in daily sales, rather than to assume hypothetical cases.

A resident in the mid-section of Manhattan Island (New York City), living in a D.C. district, purchased a D.C. electric receiver. It was installed by the dealer and operated perfectly. The customer was very well satisfied and so expressed himself to the installation man, at the same time signing a receipt to that effect. Subsequent data bring to light the facts that, within four days after installation, four tubes constituting the output stage burned out, necessitating new tubes. The customer, awed at the outset, purchased four new tubes of identical manufacture. This time the receiver operated normally for five days, and then new tubes were again necessary. Once more he duplicated the burnt-out tubes, without complaint to the dealer who sold the set. And again tubes were necessary in five days, making twelve new tubes in exactly two weeks! The last batch was the "straw that broke the camel's back," and the complaint was registered. Examination showed: first, that the line-voltage was excessive, and had been excessive since the day of the installation. Secondly, that the tubes used in the output stage were not correct for the installation, being of the 0.25-ampere type instead of 0.5-ampere. The receiver owner, knowing nothing about tubes, duplicated the wrong tubes in each case.

Now, here is an example of where the installation man was at fault, producing a condition which makes it very difficult for the receiver owner. Tube replacements are extremely annoying and not very favorably received by radio dealers. Such complaints are numerous, and encountered with A.C. sets as well. The failure of tubes constitutes about sixty per cent. of all the troubles encountered in radio receivers; and about eighty per cent. of this trouble would be eliminated if the operating voltages were checked at the time of installation and adjustments made to secure the correct values.

Good radio service starts when the set is installed, not when it becomes defective.

Every effort must be made to preclude the defective state; to lengthen that period between the original high-caliber performance, and defective performance. We must admit that service will be necessary at some date, but must also incorporate every measure to lengthen the period of satisfactory service.

Checking the operating voltages when a set is delivered is one of the important steps when a radio receiver is installed, regardless of type; yet the practice is not followed. Why, no one can definitely state, unless it is the time-limit method of procedure. An installation of this type places the receiver owner at a definite disadvantage. It is true that there are exceptions to the above rule; but we are not concerned with the instances which do not produce harmful results. We are concerned with the other classification. The structure of the vacuum tube is such that elaborate laboratory equipment is necessary to determine whether a burnt-out filament has been overloaded; such equipment is not available in the average radio store. Furthermore, tube replacement is not general. Why burden a novice with troubles which he should not bear?

Now, we come to another problem; one which, while not discussed to any great length, introduces a matter of interest. If the line-voltage is excessive, increasing the hazard of tube burnout, some means must be provided to reduce the filament voltage to the correct value. This work does not introduce any visible difficulties, yet we find that numerous installations are incorrectly calculated, with very poor results. We refer to the resistance unit, connected between the power-supply plug and the receiver. In order to perform well this unit must dissipate a certain amount of power and this means that certain technical facts must be known: first, the required voltage drop; secondly, the current flow during that period; and thirdly, the wattage rating of the voltage-control unit. Now, we are going to make a surprising statement; that many men who install such units are not aware of these requirements and make haphazard installations. In one case, the line voltage was reduced to 102 volts from a 120-volt line. In another case, the resistance unit overheated and damaged the floor, almost starting a conflagration. In both cases, the customer was inconvenienced, and his complaint was entirely justified.

The selection of such a resistor is not a very technical problem, but it necessitates a knowledge of Ohm's Law and, in some cases, the principles underlying the operation of a power transformer. We realize that the average Service Man does not carry a meter which will indicate A.C. current flow in the primary of the power transformer. Why not approximate the current flow in the primary, by calculating the power load applied to the secondary of the transformer as represented by the various windings, and allow about eighty per cent efficiency in transformation?

Service begins at the time of installation, not after the set is performing poorly.

It is too late to discover excessive line-voltage after a number of tubes "have gone West." Preclude the possibility of premature filament failure by checking and controlling line-voltage at the time of installation. That is the start of service.

UNCONVENTIONAL VOLTAGE DISTRIBUTION

SOME time ago we gave the advice: "Take Nothing For Granted." The need for continually bearing that rule in mind is shown by an examination of the "B" eliminator voltage-distribution systems in use in many modern receivers. Not until the development of some defect in the eliminator proper, does one realize how different modern systems are from those used years ago. Not that all modern receivers differ from the older type in this respect, because quite a few receivers being made today employ simple voltage dividers; but rather that many receivers employ somewhat complex arrangements, differing at least enough to cause much grief and aggravation until discovered.

A voltage drop is a voltage drop, no matter where it is obtained. If the polarity is correct, the application and utility are limited solely by the existing requirements. For instance, in several modern receivers, the speaker's field coil is connected in the negative lead, and the total current through the winding produces a drop. Now this drop can be used as the grid bias; but, to complicate matters, a separate divider is shunted across the field winding to provide a bias equal to a fraction of the total drop across the choke. Hence one must remember that such arrangements are possible, and learn to recognize the system when it is in use.

Another peculiarity noted in certain installations is the use of a voltage-reducing resistance right in the midst of the filter. Such is the case with the output tube's voltage-supply lead; but we refer to voltage-output leads which are associated, not with the output tube, but with the detector tube instead. When seeking this lead one would naturally search for some tap upon the divider. Such is its location in the majority of installations; but do not overlook the fact that the voltage may be secured from any part of the filter, if the correct voltage-reducing resistance is available. Not only is this resistance located external to the regular voltage divider and connected at the normal position of the output tube's plate voltage (at the mid-point connection between the two filter chokes) but a separate choke-and-condenser filter section is also an adjunct of the plate-voltage lead. Thus we have three filter sections, only two of which are in line; while the third is a separate circuit carrying only the detector plate current.

If you believe that the conventional design of a voltage divider is universal these days, you are wrong. A resistor may be connected across the output of the eliminator filter system, but it need not necessarily be the voltage divider. Separate resistors, joining at the maximum positive lead, reduce the voltages for the respective plate circuits; and, when they are operated in conjunction with separate by-pass condensers, they constitute individual resistance-capacity filters in each plate system.

We are accustomed, when visualizing an A.C. power pack, to imagine just one resistor connected across the maximum plus and maximum minus leads, and functioning as the combination voltage divider and bleeder resistance. Such systems still exist, but other systems cause the confusion. It is not a rare occurrence these days to analyze a receiver and discover, when the circuit is traced upon paper, that the voltage-dividing resistance comprises two or more separate systems connected across the eliminator output and, in addition, a third divider of the potentiometer type connected across a portion of one of the two dividers. Such a system may be explained as a single resistance used as a bleeder across the eliminator, with a divider connected across one portion of this resistance and serving to supply a variable screen-grid bias. The second divider across the eliminator is a combination of voltage-reducing and bleeder resistances, connected to the grid-bias resistors for some of the tubes; so that the actual bias is due, not solely to the tube's plate current, but also to supplementary current furnished by or through the additional bleeder resistance.

It is not surprising, these days, to check a receiver and find three or four bleeder resistances in the voltage-distributing system.

The grid-bias resistance, employed to furnish the bias in either a cathode or a filament type of A.C. tube, need not be a separate resistor located in the cathode circuit or in the filament center-tap and "B—" circuit. It can be a part of the bleeder resistance; as in the days of old when eliminators were in use, but A.C. tubes were just coming. The fact that the junction of the bleeder resistance (part of the voltage divider) and the filament center-tap or the tube's cathode appears to be at some positive potential does not mean that a positive bias is being applied to the tube. Such has been the impression of many Service Men who have examined such circuits. If you check the system you will find that the most negative part of the "B" supply is grounded; while the junction between the voltage divider or bleeder resistor and the filament center-tap or cathode (generally classed as being some value of "B+") is actually "C+" and, according to old forms of layout, would be also "B—." The confusion arises because the voltage observations upon the receiver check normal, yet the schematic diagram appears erroneous.

As a point of information, we listened in upon a conversation relative to a supposed error upon a schematic diagram. While it is true that no one is infallible, do not come to a hasty conclusion that the drawing is wrong, simply because the circuit arrangement does not correspond with your ideas. Perhaps you are right; but check it once again and be certain.

Every effort is being made these days to isolate plate circuits. This means that plate voltages are controlled by individual voltage-reducing resistors, and failure of one resistor does not necessarily interrupt other plate circuits. Do not for one moment take for granted that lack of plate voltage upon one tube means a similar condition in all of the other associated stages. If you do, you are in for a sad disappointment.

The fact that a single cathode resistor is used to furnish the grid bias for more than one stage in a system does not necessarily mean that the voltage drop is due solely to the combined current of those three tubes. If the resistance is checked and the drop does not equal the result calculated by Ohm's law, check for a bleeder resistance, connected between the common junction of the cathodes and their resistor and some part of the plate or screen-grid circuits.

Whereas it was customary, in days past, to operate all radio-frequency amplifying tubes at like values of plate voltage, such design is not general today. Two tubes in a four-tube system may be operated at one plate voltage, and the other two tubes at a higher voltage.

After all is said and done, such arrangements do not introduce new electrical laws; all are governed by laws developed years ago. The marked difference between the old and the new is nothing more than the use of a greater number of resistors and closer linking of circuits.

Such unconventional forms of voltage distribution mean much when testing receivers. An open plate circuit in a conventional system would interfere with the grid bias. In many systems used today, wherein a bleeder resistance, connected between the "low" end of the plate winding and the junction between the grid-bias resistor and the cathode, supplies current to the grid-bias resistor, a bias will be evident without a plate-current indication upon that meter.

Times are changing and systems are altered. Take nothing for granted, and visualize new methods of connection.

TUBE TESTING

WITH due consideration of the economical aspect of tube testing and the effort to make all tests with the minimum expenditure of time and money, it is still necessary to give thought to the fact that all forms of testing devices are not equally applicable.

Take as an example a small tester designed to show plate current and emission current. The usual range of emission current and output current of rectifying tubes extends as high as 200 mils. In many cases one meter without shunts or multiple ranges is employed. Such a meter will be found satisfactory for high values of current; but it is extremely difficult to satisfactorily interpret small values of current, such as 5 mils, or the difference between 5 and 10 mils. The significance of this condition can best be illustrated by an incident in the writer's recent experience.

A number of tubes tested on an accurate tube tester, known to be in perfect condition, were placed into the hands of a group of men. They were told to test the tubes and to report upon their suitability for use in radio receivers.

One man employed a combination set and tube tester with a 0-to-50 D.C. milliammeter arranged with a 250-mil shunt. He rated the tubes as fair, checking plate current and grid swing on the 50-mil scale. An investigation showed that the meter was off approximately 3.5 mils at the zero point. In other words, the zero adjustment was not accurate. Such a small discrepancy was considered negligible, yet it amounted to almost 33% on a 10-mil reading. Of course the 3-mil difference was negligible when testing the current output of a rectifier such as the 280 or the 281; but it did influence small current readings. . . . When reminded of the discrepancy, he merely shook his shoulders.

Another man condemned the tubes and said that the emission current was low. Investigation showed correct readings but incorrectly comprehended. The meter was a 0-1 D.C. milliampere instrument equipped with 10, 20, 50 and 200 mil shunts. The scale was the 1-mil range and it was necessary to calculate the values according to the shunt in the circuit. The man thought that the 10-mil shunt was in use, whereas the 20-mil shunt was being used. The fact that all the tubes showed lack of emission did not arouse the slightest suspicion and he was so certain that the correct scale was being used, that an examination was not deemed necessary.

The third man reported satisfactorily, but his test figures did not conform with the initial accurate measurements. His figures were slightly lower in every case. An investigation showed that the filament voltage was not the exact value stipulated in the manufacturer's bulletins. He used 4.75 volts instead of 5 volts and approximately 1.39 volts instead of 1.5 volts.

The fourth man likewise reported satisfactory performance. His figures on the other hand were high. A check-up of the system showed that the voltage output from the filament supply transformer was in excess of the rated value. He employed a filament winding designed for six tubes of certain type and was applying only one tube at a time. In addition the line was in excess of the rated 115. A test upon the transformer showed that the rated output was available with 110-volt input. The line voltage at the time was 121.4 volts.

The fifth man found the tubes erratic. No two tubes seemed to provide similar readings. An examination of his set-up showed everything to be normal. When the writer made the regular routine test, the figures were satisfactory; but when the man made the tests the figures were again erratic. He did not read the meters with any regard to precision.

The ninth reported one tube normal and all the rest deficient. A detailed test showed that his readings were correct. The tubes were again checked upon an elaborate layout and found normal, yet plate current tests showed low readings. The meter was checked and found defective. The fact that one of the tubes was classed as satisfactory provided an interesting point for investigation. This tube was rechecked upon the defective tester and showed up identical with the rest. To all appearances the meter was perfect. A verbal cross examination of the operator brought to light the fact that after completing the test upon the first tube, which showed normal condition, the current meter was accidentally subjected to a heavy overload, but fortunately did not burn out. All readings thereafter showed low readings. The meter was damaged and all of the tubes tested with the defective meter showed poor condition.

We admit that such procedure does not seem normal; yet the above facts are, without a doubt, the exact conditions present in thousands of set and tube testers—not because the meters were poorly designed or manufactured, but because they are carelessly handled. Tube manufacturers are very reluctant to provide definite standards for testing; to provide stipulated figures and tolerance values, because the testing is not carried out along the proper lines. A tube test in order to be satisfactory need not be elaborate, but it must be accurate; the meters must be in good condition and the operator must be meticulous in his work.

We do not mean to imply that tubes are not defective. Hundreds of thousands of tubes are found defective each year and the tests are accurate; but, at the same time, other tens of thousands are unjustly classed as unfit for use. If you are going to test tubes, see that the tests, the meters are accurate. The average meter is a delicate instrument. It should not be subjected to heavy overloads, or as a matter of fact to overloads of any kind. Physical shock will damage the mounting and meters should be handled with care.

If you are going to test tubes, see that the operating voltages are correct: 20% difference in the filament voltage of the 326 will cause 50% difference in emission. Filament and plate voltages must be according to the manufacturers' ratings. If you are going to work with meters, read accurately. Do not read the deflection from one or the other side; look right down upon the meter, so that a line drawn from the meter deflection towards the face is perpendicular to the plane of the scale. Only by complying with the above conditions will you feel secure when you accept or condemn a tube.

CHECKING INACCESSIBLE UNITS

A RADIO receiver is nothing more than a coordinated arrangement of electrical units. The electric receiver of today approaches, most closely, what may be classed as a wholly-interlocked system, wherein every part is tied in with the next. This condition makes possible the testing of inaccessible units; perhaps we should not use the word "testing," instead say "checking." Time and again, it is found difficult to reach one or more units which are located in the innermost recesses of the receiver. But, by suitable analysis of the receiver wiring diagram, it is possible to locate a circuit whereof the unit to be checked is a part. Just how effectively he can check such units, depends upon the Service Man and his knowledge of wiring diagrams.

If we examine a wiring diagram, particularly that of an electric receiver of modern date, we cannot help but note that the ground terminal is common to all parts of the circuit (at least, the "B—" terminal is common to all circuits). In this connection we except just one part of the receiver, the voice coil of the dynamic speaker. In very rare cases, it is also necessary to except the aerial circuit; but, in the majority of instances, the ground end of the aerial circuit terminates at "B—."

Starting at the "B—" terminal, we can trace continuity to every part of the system other than the two mentioned. The number of electrical elements present in the system between "B—" and the extreme end of the circuit is a matter of design. Thus, in the detector circuit of the conventional receiver, we may find the sections of the voltage divider, perhaps a filter resistor, the plate coupling unit and, mayhap, the radio-frequency choke in the plate circuit between the detector plate and the plate end of the coupling unit.

Of these units, one or more may be located in the power pack, and thus separated from the receiver proper. However, with the receiver wiring diagram as a guide, and the electrical values of the parts marked upon the diagram, we can check not only continuity to the "B—" terminal, but also the electrical values of the different sections in the divider. This is possible in the following manner:

If the plate coupling unit located in the detector plate circuit is a resistor, its electrical value is marked upon the diagram. If the plate coupling unit is a transformer, its resistance may be approximated or determined by a D.C. voltage test across the terminals of the unit. The plate current flowing in the detector plate circuit may be determined without much trouble. Applying Ohm's law for resistance, and substituting the voltage measured across the primary and the current in the plate circuit, will determine the resistance of the winding. Assuming a fairly low value of resistance for the detector R.F. choke (about 25 to 30 ohms if it is of the low-pass filter-system variety, and about 200 ohms if it is used as an ordinary choke) we find that the resistance measurement between "B—" and the plate of the tube indicates the electrical values of the total divider. If the total resistance of the divider as recorded does not check with the measurement, individual measurement of the various sections is possible by checking between "B—" (which usually is ground) and the various radio-frequency plate circuits.

It is, of course, impossible to quote every test which may be carried out in this fashion. Each receiver presents its own problems. Take for example, the measurement of the circuit through the grid-bias volume-control unit. One end of this resistance is ground and "B—"; the other the cathode of one or more tubes. To check the resistance of this control unit, the measuring instrument need not be placed directly across the control unit, which is usually located upon the panel and therefore difficult of access. Check between the ground and the cathode.

With "B—" terminal as the common terminal, we can check every part of a "B" eliminator system. If the "B—" terminal is the most negative upon the eliminator, contact between "B—" and the plate terminal of the rectifier tube (with the tube out of the socket) provides a resistance check upon the power transformer's plate winding. If the system employs two half-wave rectifier tubes, switching from one plate to the other permits checking each half of the winding. In cases of this nature, it is not necessary to measure the resistance. Both halves of the plate winding should show the same value of resistance when measured upon a continuity tester.

With "B—" as the common terminal, it is possible to check each ground connection to the chassis by checking between the grid of each tube and "B—." In work of this type, it is necessary to refer to the diagram to locate any possible variation from the conventional tuned grid system, in order to properly locate the circuit prongs for the resistance measurement.

Investigation of a large number of wiring diagrams shows that the method of resistance measurement is preferable to ordinary continuity testing. This is particularly true when high-resistance units are located in many circuits; the ordinary continuity test, when applied to a high resistance, does not serve well to determine the approximate resistance in the circuit. In many instances, the difference between 50,000 and 100,000 ohms is appreciable, and manifests an effect upon the operation of the receiver. When it is checked for resistance, the variation is immediately evident; when it is checked only for continuity, the presence of a fairly high resistance is indicated, but it means very little.

The proper application of short-circuiting links across various parts of a system enables determination of the condition of the unit which has been short-circuited. Naturally such short-circuiting links should not be applied across voltage-reducing resistances, where this would tend to greatly increase the voltage applied to the tube. The sole exception to this statement is the grid-bias resistance in the radio-frequency end of the receiver, or the bias resistance in the detector circuit. A momentary increase in plate current, in order to find out whether or not the grid-bias resistance is open, will not injure the tube. Based upon the conventional tube circuit, such short-circuiting links may consist of a resistance of about 500 to 1,000 ohms, connected between the cathode and ground or between the filament and ground. The cathode or the filament may be reached without pulling the chassis, and the same is true of the ground; thus, it is possible to check the grid-bias resistance without pulling the chassis.

The same method of measurement is applicable to audio-frequency grid circuits. Suppose that it is necessary to check the continuity of the secondary of the audio-frequency transformer; a resistance unit, of about 5,000 to 10,000 ohms is connected between the grid and the ground. Assuming that the grid circuit contains no units other than the secondary of the transformer, this test will show whether or not the lack of grid bias upon the tube is due to an open secondary.

Examine a modern diagram; check the various circuits, and you will find that you can make a very large number of tests by connecting a resistance-measuring equipment between the "B—" terminal and the socket contacts, and thus obviate the need for pulling the chassis.

RESISTANCES AND COLOR CODES

We have recently completed a listing of the colors used to designate the resistances used in radio receivers. Unfortunately, there is such a plurality of colors employed by different organizations, to designate similar resistance units, that a listing is not possible at this time. We make mention of this fact in order to clarify the idea that the resistance color codes employed by some manufacturers are the same for a number of manufacturers. Such is not the case. Any one listing is applicable to that manufacturer only.

A somewhat similar situation exists in the color coding of connection cables. In this respect, however, greater similarity is to be found, at least among a number of radio receiver manufacturers; although this number do not by far constitute the major portion of the organizations who make radio receivers. Furthermore, the color-code designations described as general have been found to be more applicable to old rather than the recent models. However, we wish it understood that the statements to follow are general, and not specific for all radio manufacturers.

Investigation of a large number of radio receivers and wiring diagrams, representing the products manufactured between 1927 and the end of 1929, show that the "B+" cables were of four colors, namely "Brown," "Red," "Maroon and Red" and "Maroon." In some receivers, which made use of four different values of plate potential, the highest was "Brown" and the lowest was "Maroon"; with the other colors for the intermediate and low voltages respectively. Now, very few receivers make use of four different values of plate voltage and "Brown" as the highest "B+" lead was not common. The most frequent combination starts with "Red" as the maximum "B+" and employs the remaining colors for the intermediate and the lowest voltages respectively, following the color sequence named. Brown is not used. In some instances "Pink" replaced "Red"; in fact "Pink" as the maximum high-voltage "B+" lead is used in the majority of the Zenith receivers. The combination of "Red," "Maroon and Red" and "Maroon" is popular in a very great number of RCA and Victor receivers; being used for the highest, intermediate, and low plate voltages respectively.

The filament circuits in the receivers which use red and the colors akin to red in the plate circuit, make use of "Green," "Blue," "Yellow," "Black with Yellow tracer" and "Black with Brown tracer" colors. In turn, the receivers which make use of "Pink," "Yellow" and "Blue" for the plate circuits, indicating from highest to lowest "B+," employ "Brown," "Red" and "Green" in the filament circuit. With very few exceptions, Zenith is the major organization to employ "Yellow" in the plate circuit. As a general rule this color is associated with the filament circuit and, in battery receivers, was at times used as the "A+" cable.

It might be of interest to quote color code standards adopted in 1927 and the radio receiver manufacturers who were member companies at the time. The majority of the old wiring diagrams show color codes, but quite a large number of the old receivers' schematics are without such data. (The data are secured from the NEMA Radio Standards Handbook.)

For conductors that are individual to one circuit only: "A+," Yellow; "A—," Black with Yellow tracer; "B+" Max., Red; "B+" Int., Maroon and Red; "B+" Det., Maroon; "B—" Black with Red tracer; "C+," Green; "C—(low), Black and Green; "C—" (max.), Black with Green tracer; Loud Speaker (high side), Brown; Loud Speaker (low side), Black with Brown tracer.

The manufacturers who were members, as recorded in the NEMA Handbook, are: Acme Apparatus Co.; Amrad Corp.; Atwater Kent Mfg. Co.; Colonial Radio Corp.; Crosley Radio Corp.; Dayfan Electric Co.; Freed-Eisemann Radio Corp.; Charles Freshman; A. H. Grebe & Co., Inc.; Howard Radio Co.; Kellogg Switchboard and Supply Co.; Wm. J. Murdock Co.; Philadelphia Storage Battery Co.; Radio Corporation of America; Steinite Radio Co.; Sterling Mfg. Co.; Stromberg-Carlson Tel. Mfg. Co.

Although the Victor organization is not listed, a large number of their receivers are wired according to the aforementioned standard code. As a contrast, the color code in a large number of the Atwater Kent battery models is somewhat different from the standard listed, and is as follows: "A+," Red; "A— B—," Black; "B+," max., Brown; "B+" low, Yellow; "B+" Intermediate, White; "C—," Green with Yellow tracer.

The use of the Red for "A+" and the Black for "A—" is common in a large number of battery receivers made by many manufacturers; it is also true of a large number of the Federal series-filament A.C. receivers. In fact, these receivers correspond to the listing shown for the Atwater Kent battery receivers, with the sole exception of the use of a Blue wire for the "C—" and of Green for the power tube's filament circuit, which is A.C. operated.

It is also significant to note that a combination of color codes was used in some of the early Freshman receivers. The maximum "B+" cable was Blue with White tracer, and the low "B+" cable was Brown. In some of the D.C. electric receivers, the maximum "B+ lead was according to the NEMA standard, with the exception of the detector plate lead which was Black with Red tracer.

Old Amrad receivers used a combination of Red, Blue and Brown for the high, intermediate and low plate voltages. Yellow, Green and Slate were the colors used in the filament circuits.

Stewart Warner made use of Black, Black and Yellow, Black and Red, and Brown for the filament circuits in a large number of A. C. receivers and Gray, Red and Maroon for the three values of plate voltage; with Gray as the highest and Maroon as the lowest. At times Green was "B—" and in other cases Green was used in the filament circuit.

Fada, as a general rule (although not so in every case), follows the standard as set forth in the NEMA Handbook.

It might be well to mention that Red as used in the Zenith receivers is invariably associated with the filament circuit, being "A+" in battery receivers and one of the filament circuits in the electric receivers.

As a summary, we would suggest that the color code for any one type of receiver manufactured by an organization be recorded and checked against several types of receivers made by that organization. Since no one code is common to all, it is necessary to compile color codes according to the manufacturers and according to years or the types of receivers.

TONE CONTROL

There has been a great deal of agitation about tone control. The principle is being discussed pro and con. Some receiver manufacturers favor its application, and others are against it.

What is tone control? What does it do? Questions of this type are heard daily.

Tone control, in the fullest sense of the word, denotes a means whereby the tone of a sound may be changed. Since the tone is a matter of pitch and, therefore, involves frequency consideration, "control of a tone" would seem to signify some means of varying the frequency. Obviously, such a procedure is impossible; but it is possible to vary the comparative amplitudes of the frequencies present in a sound, and thus to change the timbre of the tone. By increasing the amplitude of some frequencies, or the intensity of the sound, it is possible to create in the mind of the listener the same impression as if he had heard frequencies which were absent in the sounds issuing from the speaker.

While it is true that certain physiological reactions can be produced by means of a system which is of such design that the amplitudes of the frequencies can be varied, this does not signify that such a result is possible with the present-day systems of "tone control" which are employed in radio receivers. There are many reasons which indicate the need for a tone-control system: among them are the peculiarities of the human ear; the fact that the reproduction of the broadcast music must usually take place in a room which is much smaller than studios where the original music is being produced; the fact that the intensity of the reproduced music is much less than that of the original; the fact that the reproducing mechanism is far from being perfect; and several other similar considerations. However, the reader should not imagine that the average capacity-type tone control system produces such a control of the frequencies which are being passed through the audio amplifier. In short, the capacity-type and similar simple forms of tone control, introduce distortion. Of that, there is no doubt; but the question arises, whether such distortion is or is not desired by the listener? Judging from all signs, distortion of the nature caused by the simple forms of tone control is desired by the radio public. That such a condition has been existent for a long period of time has been shown by the oft-suggested methods of producing "mellow tones."

"Mellow tones," as interpreted by the radio public, and as produced by several popular methods, means the loss of the higher audio frequencies. Anyone interested in the characteristics of speech and music will readily appreciate the significance of the high frequencies in speech and music; they mean brilliance and color in music, intelligibility and articulation in speech. But, if I do not care for the presence of the high audio frequencies in music, and I am satisfied with the speech-sounds which do not contain the frequencies above 2,000 cycles, who is there to tell me that what I hear is not what I *should* hear? Perhaps it is poor music in the ears of a music lover; but I like it just the same.

On the other hand, the introduction of the simple form of tone control defeats the efforts of that group of organizations who are true music lovers and are attempting to foster interest in musical appreciation. There is no doubt about the distortion introduced by the simple form of tone control, there is no doubt that it impairs the beauty of a symphonic orchestra — but one is tempted to ponder over the possibilities of satisfactorily reproducing a 125-piece symphonic orchestra in a living room (say, 14 x 17 feet), when the receiver is not equipped with tone control. Furthermore, one is tempted to ponder over the sensations of the average man or woman who is not a lover of symphonic music, and who would, when obliged to listen to perfect reproduction, express an unfavorable comment. Many such individuals find pleasure in symphonic music when they can change the timbre of the complete sound. Whether or not such a viewpoint is correct, is beyond the point. The fact remains and it is glaring that the simplest of tone-control systems affords a means of satisfying the desires of the listener.

Perhaps we should qualify the last statement. The true music lovers who can appreciate good music, and whose auditory organs are such that they can appreciate the absence of certain frequencies, find no advantage in the tone control. Unfortunately, however, this group is a minority, and the majority must rule. Condemnation of the tone control is not in order. What is necessary is the design of a tone-control system which can be applied when desired, and disconnected when not desired. Of course such a system must increase the cost of a radio receiver. The design of the radio receiver without the tone control should be based along the ideal, theoretical lines, tending to produce music and speech of the highest calibre.

No one on earth can control the musical or gastronomic tastes of any other individual or, for that matter, any of the human desires. Radio manufacturers have known for a long time that the receiver-buying public has not been satisfied with the musical reproduction. It would be wonderful if all of us were music lovers; it would then be unnecessary for some of the rich men in this country to endow and finance musical organizations. The ticket sellers at concert halls greet many of their customers by the first names, because the same people come again and again. They are music lovers, but their numbers are few. We might just as well look the truth in the face; the major portion of the population desire "hot jazz" and not symphonic concerts.

The beauty of a symphonic rendition can be appreciated only when the listener is in the concert hall, or if the reproduction is of the original intensity. Musical composers attempt to create a picture in the mind of the listener. How can one visualize the march of countless men, the rumble of thunder or of cannon, and countless other images, when the intensity of the reproduction is so low as to cause the loss of many notes; and the crash of bass drums or the thunder of bass chords upon a piano sound like the flapping of wings?

It is indeed unfortunate that the majority of the listening public desire depth of low notes, and not the brilliancy of the high notes. It is also unfortunate that the zone of frequencies representative of noise includes the upper audio register. Efforts to remove noise have resulted in the elimination of some of the high frequencies. The sideband limitation has also resulted in the minimization of the upper audio frequencies. The musical instruments within the knowledge of the average individual are those which produce fundamental tones below the upper limits of the normal audio range. The popular type of music, listened to by most people for many years, has been that in which the low tones predominate. The telephone has caused people to comprehend speech despite the absence of the very high audio frequencies, and to appreciate the presence of the low tones.

Whether or not the present form of tone control can be classed as an improvement, is a subject open to discussion. The tone-control system, wherein the amplitude of the upper or lower audio register can be increased or decreased at will, constitutes an improvement. The present-day form of tone control by capacity or capacity-resistance units, was used back in 1925 and 1926, and is therefore not new. It introduces distortion, but it offers the advantage of permitting a change in reproduction to satisfy the desires of that tremendous number of people who prefer low tones and dislike high tones. Certain types of cheese may seem too odoriferous to many people and offend their fine sensibilities while hundreds of thousands find such cheese pleasing to their palates.

(And the moral is, we presume, that the successful cheese merchant makes his profit by furnishing his customers with the flavors and odors which they prefer, without regard to the brands which he puts on his own table. Or, as the old Roman said, *De gustibus non est disputandum;* that is, tastes are not to be disputed about, but satisfied. *—Editor.*)

TAKING THINGS FOR GRANTED

ONE of the interesting—if not the most interesting—high lights of radio service work is that nothing can be taken for granted. Each diagnosis for trouble, be it simple or complex, is individual in itself.

Take, as an example, the voltage divider employed in a "B" eliminator. It is common practice to employ the "bridge" type of unit; that is, the resistance network across the output of the filter system, with taps at certain points to provide certain fixed voltages. Yet it is unsafe to assume that all radio receivers employ such voltage-divider systems; because quite a few employ the parallel arrangement, where a separate resistance is connected between the maximum "B+" and the tube or tubes to be operated at a certain value of plate potential.

It is quite common to supply grid bias for the output tube by means of a fixed resistor connected between the center tap of the filament circuit and the grid return lead, which is also "B—". Yet it is unsafe to assume that all are connected in this manner; because some popular receivers employ a separate resistor in the "B" eliminator system as the source of bias for the output tube.

One would naturally assume that, if a voltage-divider resistor is used in connection with a "B" eliminator, and this resistor is tapped at certain points for the voltage required in the receiver, the tap intended for the detector connects directly to the unit located in the plate circuit of the detector tube. Yet measurements of the supposed "detector" voltage at the divider, and at the tube plate, show a difference greater than that which should be due to the drop across the transformer primary in the plate circuit. The difference is due to a drop across a special resistor located in the detector plate circuit of many receivers. This resistor is used to drop the voltage to the value required for the detector tube, and is external to the voltage-divider.

The fact that two output terminals are provided inside the receiver housing does not signify that an output coupling unit is enclosed within the receiver. Quite a few A.C. receivers designed for operation with '71- or '71A-type tubes are equipped with two output binding posts, but not with output coupling units. The (magnetic) speaker tips are plugged into these terminals and, as such, are directly in the plate circuit of the output tube.

Defects do not occur at the most accessible points in an installation. Several instances have been found where short circuits were located within the connector plug employed to couple a dynamic speaker to the receiver proper. Such plugs have four or five contacts whereby several circuits are closed. An apparent defect in a speaker system need not be located within the speaker proper. Check the plugs!

The ends of shielded cables frequently cut through the wire insulation and, when jarred by vibration of a receiver during operation, will cause intermittent shorts.

Though it is a fact that a very large number of power packs employ the '80-type rectifier tube with similar capacity values in the filter system, the D.C. resistance of the chokes employed in the filter is not always the same. Investigation among a large number of manufacturers shows that such resistance values vary from about 200 to about 1,000 ohms.

The fact that one chassis put out by a manufacturer utilizes chokes rated at, say, 330 ohms D.C. resistance does not mean that the same type of choke is incorporated in the "B" supply unit employed in conjunction with another receiver chassis; despite the fact that the rectifier tube is the same in both instances.

Filter chokes employed in A.C. "B" eliminators are not the same as those employed in the eliminators of D.C. receivers. Because the frequency to be filtered is much higher, it is possible to employ smaller values of inductance; and, since the current flow through such chokes is much higher than in A.C. receivers, the D.C. resistance of the winding is much less. The D.C. resistance of such chokes varies from a fraction to about 30 ohms.

All '26-type A.C. tubes do not secure their grid bias by means of a resistor located in the filament center tap-"B—" grid return circuit. Quite a few receivers still employ the old "B" eliminator standby.

All radio receivers have not reached the standard of design where it is possible to secure a high degree of tone quality with low value of power output. In many good receivers excellent quality is available with high gain level; but the reproduction falls off when the volume is reduced. The fault is in the speaker and not in the set.

The fact that a unit is new does not mean that it is perfect. Quantity production is such that a few defective units slip by now and then. We make particular reference to phonograph pick-up units; it is possible that they may be defective when purchased.

The conventional filter system employed in a "B" eliminator is of the "pi" type, with two chokes in series with the line and three condensers across the line. In some of the new receivers, however, the design of the filter system has been changed; the structure is still the same but the number of elements in the system have been changed. In some, one of the chokes is shunted by a capacity; thus forming a parallel resonant circuit in series with the line. Filter systems are undergoing changes in design. Quite a few do not employ the input capacity.

The fact that an audio coupling unit is contained within a metal case equipped with four output terminals (indicated as "P," "B," "G" and "F—") does not signify that the unit is a transformer. Quite a few receivers arrange impedance-coupled units in such fashion. Furthermore, the fact that an audio coupling unit bears more than four terminals does not mean that it is a push-pull transformer. Several receivers are equipped with single units housing two separate transformer windings connected into different audio stages.

The fact that a transformer consists of two separate windings, inductively coupled to each other, does not mean that the two circuits are isolated from each other. Bear in mind that the grid return lead terminates at the "B—" terminal, and that the other side of the "B—" terminal (namely the "B+") terminates at the primary winding of the same transformer. Thus continuity testing cannot be done unless the leads to the transformer are disconnected.

The man who takes for granted that a tube is not shorted will eventually pay the cost of several new meters. Short circuits are common among tubes which have been handled, inserted and withdrawn from sockets. Test all tubes for short circuits before inserting into a regular tube tester.

The fact that perfect continuity is available through a winding, as determined by means of a voltage test, does not mean that the winding is perfect; it may be shorted.

The fact that a receiver operates, although poorly, does not mean that its circuit continuity is satisfactory. Open plate circuits in the radio-frequency amplifiers will not always stop operation of the receiver. Open plate-circuit resistors will impair performance, but will not interrupt operation.

TELEVISION AND THE SERVICE MAN

THE purpose of this material is not to herald the advent of television. While it is true that television is not yet a practical reality, it has made certain definite strides toward its exit from the laboratory We find much comment (adverse, of course), about the modern forms of television reception and, in particular, the use of the scanning disc. Whether or not it will be necessary to improvise new methods of television transmission and reception, is not a matter of importance now. The fact of significance is that certain stations are broadcasting moving pictures, of elementary character, at the time of this writing, and more and more popular interest is being displayed in such operation. In this connection, the writer of these lines has been daily and nightly observing the transmission of one local station and, intermittently, the transmissions of three other stations, two of which are more than 200 miles distant.

The exploitation of the experimental nature of television has been due, not to the character of the transmitted image, but to the fact that sufficient coverage has not been available with any one transmitter. All indications point to improvements in this direction; so much so that we take this opportunity to say the future will show a tremendous increase in the interest displayed in television reception. Without a doubt, reception will at first be limited practically to centres in the proximity of the transmitters; this means large cities, but reports show that satisfactory signal intensity is available at many points a good distance from the transmitter.

It is not a far-fetched statement to say that changes may be made upon the audio amplifiers, now employed in radio receivers, to accommodate these systems to television as well as conventional speech and music reception. We have heard much technical comment pertaining to the tremendous width of the band required for the attainment of a satisfactory image. The radio world at large —at least the men who are experimentally inclined—will not wait until a perfect image is available. Strange as it may seem, many broadcast listeners are now discussing the possibility of television and are reluctant in the purchase of new radio equipment on that account. Recognizing the condition—that the equipment required for television involves apparatus independent of the receiver—it is very likely that manufacturers of radio receivers will develop their receivers for television reception and thus make necessary the later acquisition of nothing more than supplementary revolving mechanisms.

This comment relating to television reception includes the possibility of a change in receiver design to accommodate the short as well as the broadcast waves. Just what the future holds in store, no one knows, but we feel certain that any one who in the past has listened to the police alarms, transmitted upon short waves by the police departments of the various cities in this country, cannot help but realize that at some time or other there will be a much closer alliance between such transmissions and reception by private individuals, as well as the cruisers of these respective police departments.

What with the continued rebroadcasting of foreign programs by local stations in the United States, much time will not elapse before the appetite of our Mr. Public is whetted to the point where he will not be satisfied with rebroadcasting. He will want to hear the signal direct from the origin; this means short-wave reception.

All of the above comment pertains to the reception of variable-frequency-modulated signals. This necessity distinguishes the receiver from the conventional short-wave system developed primarily for continuous-wave reception. It means that the broadcast receiver of today will of necessity cover the short-wave band. Whether this coverage will be secured by means of plug-in coils, or variable inductances, is not yet known; but one fact is glaring. The extension of the carrier-frequency spectrum of the future broadcast receiver will without a doubt include the television band; because such extension offers very definite sales features.

Some of the complications normally present in tuned-radio-frequency short-wave receivers are being ironed out during the development of similar systems for use in airplanes. These receivers are intended for the reception of modulated signals and, as such, resemble the modern broadcast-receiving system. The findings will be of immense aid when the time arrives—and it is not far distant—to produce a multi-wave broadcast receiver.

Returning once more to television reception, such receivers will give an impetus to that field. They will reduce the cost of the equipment necessary on the part of the listener. Whether or not this idea is in accord with the ideas of some of the representative men in the industry cannot be determined; but, according to reports, it is receiving more than casual attention. As a point of interest, there is current a rumor, though we do not know just how accurate it may be, that television reception and transmission fostered by one organization is scheduled to start on a large scale.

Considered from the Service Man's angle, television presents an interesting field for study and experiment. There is no gainsaying the fact that, when television receivers are produced and television transmission becomes more general, service work will take on a new slant; new because of the introduction of items entirely foreign to the present-day receiver. In this connection we have but one warning to voice: do not under any condition imagine television to be so far off it may be dropped from the mind. He who thinks along such lines is very apt to be sadly disillusioned, when he finds himself out of the swim.

The subject of television is not of interest solely because it is a new form of entertainment. In one respect, it is an absolute necessity, as a stimulant to the entire industry. Short-wave reception, no matter how it may be exploited, will at all times be beset by one form of sales resistance due to the association of short waves with code transmission, and the fact that the reception of speech and music is not yet as steady as that available upon the normal broadcast band. Unless the minds of the industry can conceive something radically new to stimulate the business, television remains the only possible item which will introduce new life. Considered from the angle of new business, new development and new life for the radio industry, television cannot be kept from the public—no matter how elementary the form of transmission and how far from perfect the image may appear.

Now is the time for all Service Men to become interested in television; to carry on all sorts of experiments; to determine the operating characteristics of various forms of amplifiers, recommended as suitable for television reception; to improvise various methods of maintaining constant motor-speed when synchronous motors are not available; to study the operation of gas-filled lamps, the operation and troubles in short-wave receivers; to experiment with tuned-radio-frequency short-wave systems. Time lost will be money lost.

WHY RADIO SERVICING GROWS DAILY MORE COMPLEX

ONE need not be a close observer to note that the panorama of set design has undergone a great change during the past three or four years—as a matter of fact, even during the last two years. There was a time when any man conversant with the technical side of radio could design a radio receiver. There was no need for an extensive grounding in engineering; because most of the work was of the cut-and-try nature and the requirements were very few. Service, at that time, necessitated only ordinary bell-ringing-circuit experience.

Not so in this day of thorough design. Just as the requirements for set designers or engineers have increased, so have the complexities presented to Service Men kept pace with the improved design. There is no longer room for the cut-and-try engineer, and there is no room for the "Cut-and-Try" Service Man.

Each new model of a radio receiver introduces some innovation or some change in design which makes the receiver more complex, so far as technical detail is concerned. Suppose we analyse some of the modern receivers, and compare them with the systems of yesteryear.

The introduction of the band-pass filter became a necessity as the number of stations upon the air increased, and as the demand for better quality of reproduction was voiced with sufficient loudness. Essentially, the band-pass filter is somewhat like the ordinary tuned radio-frequency transformer; both allow the passage of a certain band of frequencies. However, the design and operation of the radio frequency band-pass filter is much more complex than that of the ordinary tuned radio-frequency transformer; the number of circuits involved is greater, and the number of units involved is also greater. To be in a position to effect some corrective remedy, in the event of trouble, the Service Man must be familiar with the design and operation of such circuits.

To add to the complexity of the circuit there is the present use of systems whereby the original fault of the conventional radio-frequency band-pass filter is corrected. The first receivers to employ band-pass filters were afflicted with trouble of a peculiar type; the filter system performed well over a certain frequency band (perfectly, to be exact, upon only the carrier frequency.) For frequencies below and above this figure, the width of the band passed was either greater or smaller than the required 10 kilocycles, depending upon the form of coupling used between the parts of the filter.

The modern receiver is no longer troubled by such difficulties. Engineers have now combined the properties of inductive and capacitative coupling, in such manner as to secure a constant width of band over the entire broadcast range. Whereas a man could once become familiar with either the capacity- or the inductively-coupled type of radio-frequency band-pass filter, and hope to pass on that score, he must now be familiar with, not only both of these coupling arrangements, but also the combined effects. Furthermore, engineers have developed more complex forms of capacity coupling whereby uniform width of band-pass is secured without combining two forms of coupling. The comprehension of such arrangements is not difficult, if one sets himself to the task; but, if practical experience is to be the sole teacher, much water will pass beneath the bridge before even the functions of the various elements are understood.

To add to the complications, which make study even more necessary, some of the parts employed in such systems are necessary in order to accomplish an end which is seldom discussed in the ordinary radio text book. Theory will consider the requirements and the characteristics of coupled circuits, but does not include the additions necessary *in order to provide the correct degree of regeneration upon the high or low frequencies.* To arrive at the final answer, one must combine the coupled circuit with the additional elements used, and ascertain the action of the whole by considering the action of the individual parts. Thus, for example, one must know the action of a resistance in a radio-frequency tuning system, and also know the action of the coupled circuit, in order to arrive at the combinations used today. This knowledge must be gained by study.

It is not a far-fetched statement that the Service Man of the future will have to be an engineer (at least a practical engineer) if he is to understand the operations of the design engineer. Take, as an example, the use of the electric motor in connection with the modern radio receiver. There was a time, not long past, when there was no thought of any relationship between the radio receiver and a motor. But remote tuning control is gradually becoming a reality and, to understand and service such systems, the Service Man will have to be thoroughly familiar with the principles of fractional-horsepower motors. As far as the size is concerned, it is of no consequence; the knowledge required will be that related to the principles of motors.

As a matter of fact, the use of such a motor is not limited solely to remote tuning-control system. One manufacturer has introduced the clock form of automatic tuning; in other words, one can set the clock to change the tuning of the receiver in accordance with the hour, thereby automatically tuning to whatever program is desired at that time. Furthermore, home recording of the voice or of the received program is another innovation which involves the use of a motor. Who will service such motors? Will it be out of the Service Man's field, and become that of the electrician? Is competition of this nature in the offing? The logical one to service each and every part of the radio installation is the radio Service Man.

What about the home talkies? The system is built around the audio amplifier in the receiver. In the event of trouble, the radio Service Man will be called upon to repair such systems. As a matter of fact, it is not fanciful to state that the future radio receiver will be a combination of a receiving system, a television system and a home "talking movie." If this is to be within the scope of the Service Man, and the systems made successful, the Service Man must become familiar with optics, lenses, photoelectric cells, neon tubes, microphones, record-cutting devices, etc.

But why speak about a year hence? Consider the present. The home-recording system is a feature of some of the new sets. Hence the microphone and the motor and the record-cutting system are already here, and they all will require service.

The variable-frequency tone control was another innovation heralded at the show. Such tone-control systems are more complex than in days gone by, and consist of more than a number of condensers which may be switched in and out of the circuit. The fact that the new systems introduced are relatively simple is no disproof of the fact that later systems will be more complex. Signs of such systems are now appearing in the press and show that, while the operation is simple, the operating principles are complex. The service problems related to such tone-control systems make necessary a thorough knowledge of the principles and applications of resonant circuits in audio-frequency systems, the relations between the parts of the systems, and the functions of the individual units. In time to come, every Service Man will be obliged to understand the complete principles of the audio-frequency transformer, the auto-transformer, and the tuned double-impedance system.

Servicing The Broadcast Receiver

THE tasks in servicing sets fall under the headings of installation, maintenance and repair. Frequently, simple inspection is sufficient to locate the troubles, which in many cases, originate from the misuse of the set for lack of ability to operate it—in fact, for lack of ordinary common sense.

Leaving aside the installation of sets, which is not the main purpose of our text, let us examine the problems that the service man may be confronted with. and then suggest some general methods that will guide him to a solution in the majority of the cases. Then we will exemplify some special treatments in exceptional and involved cases.

A radio set comprises:

- I. Several sources of electrical energy.
- II. An R.F. Amplifying System.
- III. One or more frequency converters.
- IV. An A.F. Amplifying System.
- V. An electrically operated sound reproducer.

I. The sources of electrical energy are:

1. From the radio waves collected by an antenna or loop.
2. From the "A," "B" and "C" voltages furnished by batteries or house current tap.

The troubles from the first source may be ascribed to—

- (*a*) Insufficient aerial, and
- (*b*) Defective aerial and ground system.

Under (*a*) there may be—open or short circuits, and loose connections in the pickup system. A continuity test will reveal the defects under heading (*b*). However, for the present, no remedies will be suggested until we list the most common troubles.

2. The sources of power for the operation of the tubes are manifold, and the troubles may come from—

- (*a*) Insufficient voltages
- (*b*) Excessive voltages
- (*c*) From the presence of other than continuous currents in the supply leads.

These currents are, in most cases, harmonics of the frequency of the power supply line; at times, the fundamental may be present and, frequently, currents originating from other electrical devices connected to the same lines. Of the latter, the transients are the most objectionable and difficult to eliminate, especially in sets for D.C. These interferences may come, nay, they actually do come at all times *via* the radio pickup system, particularly by antennas that happen to run near radiating electrical apparatus such as sparking motors, X-ray machines and high tension sparking devices for ignition capable of producing shock excitation. In this case there is little hope for remedy as the interfering E.M.F.'s contain practically a continuous spectrum of frequencies, consequently including the signal frequency.

Most General Troubles In Table Form

I. IN THE SOURCES OF ENERGY

1. Pick-up System	(a) Insufficient Input to set	(a) Aerial too short
		(b) Aerial shielded
		(c) Loop in wrong direction
		(d) Set in bad location
	(b) Opens and shorts	
	(c) Loose connections	
2. "A," "B" and "C" source	(a) Insufficient Voltages	(a) Bad tubes
		(b) Opens and shorts
	(b) Excessive Voltages	(a) Poor design
		(b) Wrong connections
		(c) Opens and shorts
	(c) Extraneous currents	(a) A.C. hum due to defective filtering
		(b) A.C. by induction or conduction or capacitance
		(c) Transients

II. IN THE R.F. SYSTEM

1. Poor amplification	(a) Bad tubes	
	(b) Improper voltages	(a) Opens and shorts
2. Poor tuning	(a) Broad	(a) Condensers not tuning all alike
		(b) Opens or shorts
		(c) Too long an aerial
	(b) Sharp	(a) Regeneration due to defective design or operation or wrong tubes
		(b) Neutralization incomplete
		(c) Excessive "B" voltage

II. In the R.F. system, as in the rest of the vacuum tube networks in the radio set, troubles may be due to—

1. Poor amplification.
2. Poor tuning.

In the former case, most troubles come from (*a*) defective or wornout tubes, (*b*) by their operation at improper "A," "B" or "C" potential. However, the R.F. system has troubles of its own, mostly due to (*c*) regeneration and oscillation, and (*d*) excessively sharp or broad tuning, or no tuning at all.

It has been found that certain radio frequency transformers were made with coil forms which absorbed moisture to a very appreciable extent; cotton covered wire has this faculty to a high degree unless special precautions are taken. When moisture thus affects the operation of a radio set, it is observable as a considerable loss in volume and occasionally broad tuning. The remedy is to change the coils or to treat them with a protective covering.

The superheterodynes involve considerations which are taken up in the following paragraph. The places for trouble are more numerous in this type of receiver.

III. The frequency converters have for their function to re-create either directly or by means of an auxiliary R.F. system, the original modulating wave at the broadcast station. They are called detectors and in most instances tubes with or without a condenser-and-leak accomplish the desired result. In the superhets, there is a conversion of frequency at the first detector, which does not recreate at once the modulating wave, and here the troubles multiply themselves "*ad infinitum*" in home-made sets, as well as in some commercial sets. The difficulties experienced in these frequency transformations are caused by the presence of harmonics in the local oscillator, giving rise to a multitude of radio-frequency currents interfering with each other and thereby distorting the signal very badly. In some of the latest models of high gain R.F. sets, the detection occurs where the modulating frequency is recreated (second detector in superhets) and the tendency is to eliminate the condenser and leak and use the curvature of the plate current characteristic. This system will reduce the detector troubles to a minimum. In the detector that brings back the original modulating wave, the troubles may come from—

1. Operation of tube at improper voltages.

2. Open, short circuited, or defective condenser-and-leak.

IV. The A.F. system is responsible for most, but not all the troubles from distortion in a radio set. It rarely fails to work entirely and when it does it is due, as a rule, to defective tubes or to lack of proper "A," "B" or "C" voltages. Open and short circuits in this system usually weaken the signal to an almost inaudible strength, but poor tone quality may come as a result of several factors, of which the most common and important are:

1. Bad tubes.
2. Poor transformers.
3 Bad plate resistors and leaks.
4. Short circuited turns in the transformers.
5. Saturation of iron cores.
6. Coupling between stages, particularly between power stage and detector grid or plate returns.
7. Impedances not properly matched in the system.
8. Power stage of insufficient undistorted power capacity for the volume of sound required.
9. Periodic fluctuations in the "B" and "C" voltages commonly known as "motor-boating."
10. Loose connections.

Of all these items, Nos. 1, 6 and 8 are the most common in the modern radio receiver, because all the latest sets have been designed with high-grade transformers where care has been taken to match the impedances of the tubes with the transformer windings, and the cores are so designed that when the tubes have the proper "C" voltage the steady component of the plate current will not saturate the iron cores. As to resistance-coupled sets, there are so few in existence that little trouble is to be expected from items 3 and 7; however, the greatest malady of such sets is in the periodic fluctuations of "B" voltage which produce a sound in the loud speaker similar to the chug-chug of a motor engine; hence the popular term attached to this sort of trouble. It comes from the operation of resistance-coupled sets from filters that are not suitably designed for them, and the action is so well-known that it will not be discussed at length. (Battery operated sets rarely, if ever, "motor-boat".) The most effective remedy is effected by the use of smaller coupling condensers or grid-leaks, or both. If a high-capacity condenser is available, it usually stops motor-boating when connected across the "B" voltage supply leads.

V. The reproducer is the ultimate terminus of the audio frequency and it is here a considerable portion of the distortion results in many sets. Reversed leads are a frequent source of trouble. These may be the terminals which connect directly to the output of the set, or they may be leads, inside the unit, which join the voice coils to each other or to the cord. To properly check and correct this fault will require a delicate magnetic system capable of indicating and differentiating between degrees of magnetism. However, a knowledge of the unit and an appreciation of audio volumes will occasionally suffice. A compass is an aid to locating reversed magnetic polarity. Filings in the gap often cause distortion.

A source of distortion which may escape casual investigation is that due to sub-audible, or nearly sub-audible frequencies either generated or induced into the output audio system. When dynamic type reproducers are used the most general cause is imperfect filtration. A capacity of 2,000 mf. in shunt to the field winding usually suffices to reduce this low frequency oscillation to a negligible amplitude.

"Permanent magnets" are not permanent, and distorted reproduction from magnetic type reproducers may indicate a need for remagnetizing.

Having listed the most common difficulties experienced in connection with the whole receiving plant, let us now suggest methods to discover the faults without wasting unnecessary time and worry. For the purpose of refreshing our recollections, we give in tabular form a list of the troubles and their sources, so that by inspection of the table the remedies will become obvious in many cases.

III. IN THE DETECTOR		
1. Single detection	(a) Lack of sensitivity	(a) Improper voltages
		(b) Open or short circuits
		(c) Low resistance leak
		(d) Short circuited grid concondenser
	(b) Distortion	(a) Improper voltages
		(b) Open leak
		(c) Improper capacity of condenser
		(d) Open circuits
2. Double detection	(a) and (b) same as above	
	(c) Harmonics from the oscillator	
	(d) Unsteady oscillator frequency	(a) Poor design
		(b) Excessive feed back
IV. IN THE A.F. SYSTEM		
1. Feeble or no response	(a) Bad tubes	
	(b) Open and shorts	
	(c) Wrong connections	
2. Distorted output	(a) Poor design	(a) Poor transformers
		(b) Saturated cores
		(c) Regeneration, Positive and Negative
		(d) Power stage of insufficient output wattage
	(b) Poor construction, assembly or operation	(a) Coupling through eliminator
		(b) Impedances not properly matched
		(c) Motor-boating
V. IN THE LOUD SPEAKER		
1. Feeble or no response	(a) Opens and Shorts	(a) In the leads
		(b) In the "motor"
		(c) In the power supply in dynamics
	(b) Poor adjustments	(a) In the air gap
		(b) In the diaphragm or cone
2. Distorted reproduction	(a) Same as above	
	(b) Impedances not matched	
	(c) D.C. through "motor"	(a) Shorted coupling condenser
		(b) Absence of coupling circuit to power tube
	(d) Loose parts	(a) Loose Wiring
		(b) Sympathetic vibrations on surrounding objects
	(e) Insufficient air column	(a) Short horn
		(b) Short baffle board
	(f) Regeneration	(a) Electric Feed-back
		(b) Acoustic resonance
		(c) Acoustic-electric oack-couplings to tubes in set

Servicing Freshman Receivers

Elementary Service Procedure On These Early Receivers

BEFORE going into detail about the receiver model which this article deals with, we will describe the various units used in testing for trouble. It is quite likely the reader has the equivalent of at least one of these units; many will have all of them. However, the construction of these simple testing devices are described here because they will be repeatedly referred to in succeeding service reports, and those who pass by this elementary information will find it impossible to pick up the thread later on, where we use a single letter (A, B, etc.), to designate a test-unit connection.

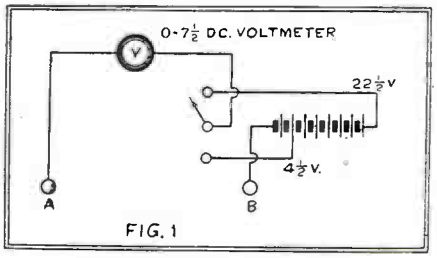

FIG. 1

Circuit of the first test unit.

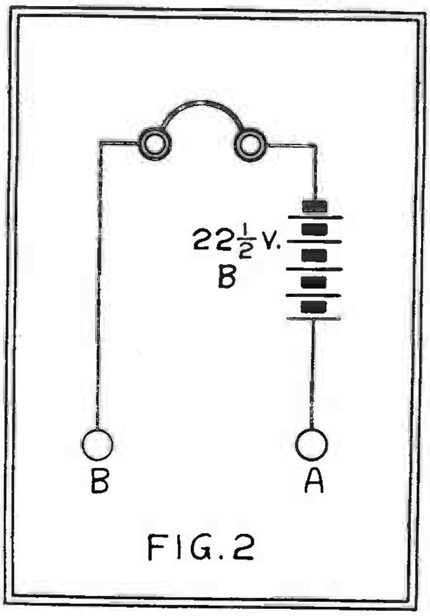

FIG. 2

Arrangement of the second test unit.

Test Units

The first and most-used item is a device for testing high-and low-resistance continuity. We need an 0-6 voltmeter, a 22½-volt battery and a single-pole, double-throw switch, connected as in Fig. 1. For low-resistance testing, switch to 4½ V. tap; for high, to 22½ V. tap. Mark the test leads "A" and "B"; this is important as will be seen later.

Next, we have one which is not used much, but is worth the trouble required to make it. This unit is for testing noisy resistances; it will also test continuity, but we will only use it for the former purpose. Connect a battery and a pair of phones in series as in Fig. 2 (Make sure the battery itself is not noisy).

Now we get to the set itself. It is a Freshman "G" which consists of three stages of tuned radio-frequency, a tuned detector, and two stages of straight audio-frequency amplification.

This receiver is designed to operate from a 110-volt, 60-cycle line. A small toggle switch on the front panel of the power supply has two positions; marked "110 V." and "120 V." This switch should, normally, be in the "120 V." position.

Lack of selectivity can be attributed to one of three things:

(1) Antenna is too long (figure the lead-in as part of the antenna);

(2) Radio-frequency tubes are defective;

(3 Set was improperly neutralized originally.

The first thing that should be done to a set, for service, is to test the tubes. The majority of trouble in sets today is with the older A.C. tubes. Like all new things, the earlier A.C. tubes underwent a series of changes before the present accuracy of production was attained. These older tubes are an almost certain source of many set troubles; while the newer tubes of reliable make work very well, as a rule.

The tubes testing O.K. leave only the two remaining causes for loss of selectivity.

Antennas vary greatly in their electrical constants, and it is well to examine this item next. If the aerial is too long, take the insulator from the end and insert it in about the center of the span, if convenient; this will cut off from 25 to 50 feet, depending upon the length of the wires. In nine cases out of ten, this will help a great deal.

Re-neutralizing

All that remains now is to re-neutralize the set. On the A.C. sets we cannot disconnect a filament-post connection, as of old; so, because "necessity is the mother of invention," we take recourse to the "kink" illustrated in Fig. 3, which will solve this problem for us. It is a tube with ¼-inch cut-off the filament prong. When inserted all the way into the socket, it acts as an ordinary tube, all prongs making contact; but pull it out ¼-inch and you have the same effect as though you disconnected a filament wire on that socket.

To neutralize, put tube (X) in first R.F. socket. This is the first on the left-hand side of the row nearest the panel. Then, tune to a station—preferably, one in the center of the broadcast band. Now you will find a stabilizer exactly in line and to the right of the first R.F. tube. With the (X) ¼-inch out of the socket, adjust stabilizer until signal is at a minimum. Do the same with the second and third R.F. stages, and then try your selectivity. Also, see that the balancing condenser in parallel with the first tuning condenser is not shorted.

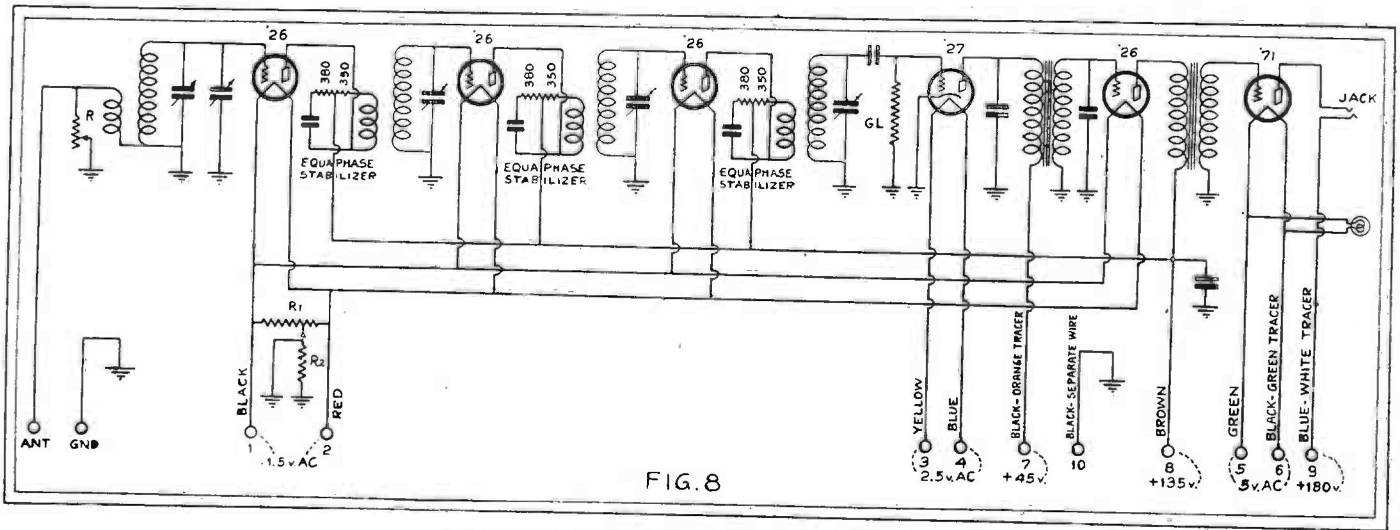

FIG. 8

Schematic circuit of the Freshman Model "G" receiver.

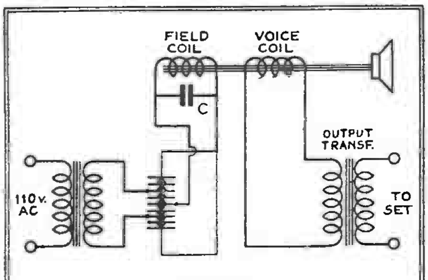

FIG. 4

Wiring of the dynamic reproducer components.

Hum Controls

The next thing we encounter very often is the hum; most of this is due to the dynamic reproducer. The one I have in mind is used in only about twenty-five thousand Freshman 65 and 66 receivers in and around New York as most of the metropolitan service men will recall.

There is a remedy for this hum. Get a 1,500- or 2,000-mf. condenser for just this purpose, and shunt it across the terminals of the field coil of the reproducer. As it is sometimes difficult to locate the field, this condenser may be connected across the rectifier output. The condenser is shown as C in Fig. 4.

Then there is the hum control at the upper right-hand corner of the set. Place the dial in a position at which there are no signals, and adjust the control to minimum sound. If hum is still objectionable, change the '27 and the 71s. This will almost certainly take out the hum completely, if it is not due to a fault in the pack.

If the set is noisy, use the device shown in Fig. 2. Put "A" lead on antenna post and "B" lead on ground post. Now try the volume control. If a scratchy noise is heard in the headphones, clean the resistor and arm with alcohol. To test grid leak, leave "B" lead on ground and put "A" lead on grid terminal of detector socket. If noisy, replace the leak.

The other troubles one may encounter in this receiver usually, resolve themselves into a burnt-out transformer, a shorted variable tuning condenser, or a shorted trimmer condenser.

Here are where our troubles start. For additional hum trouble and repairs, we have to open the power-supply case. Take a 5-inch bare wire and, short leads 1 and 2. If hum increases, the bottom choke is O.K.; if not, it is bad. Do the same to leads 2 and 3. (These tests are made with set in operation; so take all precautions to avoid touching any chassis or lead points, other than the test contacts.) Next, check all condenser-bank leads and re-solder any broken connections.

Resistors and Condensers

To test resistors, use the circuit of Fig. 1. With switch in lower position, put "A" lead on No. 10 binding post and "B" lead on No. 6. This and the following connection should show continuity. If there is no indication of continuity between posts 10 and 6, replace the 2,100-ohm resistor. Then, put "B" lead on No. 7 post; the resistor value is 3,000 ohms. Test next with "A" lead on No. 8 post (resistor value, 4,300 ohms, between posts 7 and 8). Now change "B" lead from No. 7 post to No. 9; here the resistance is 1,250 ohms. Again change "A" lead from No. 8 to No. 3 lead on the choke assembly;

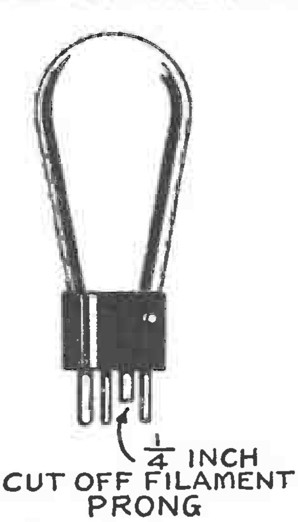

FIG. 3

A device (x) used when balancing neutrodynes.

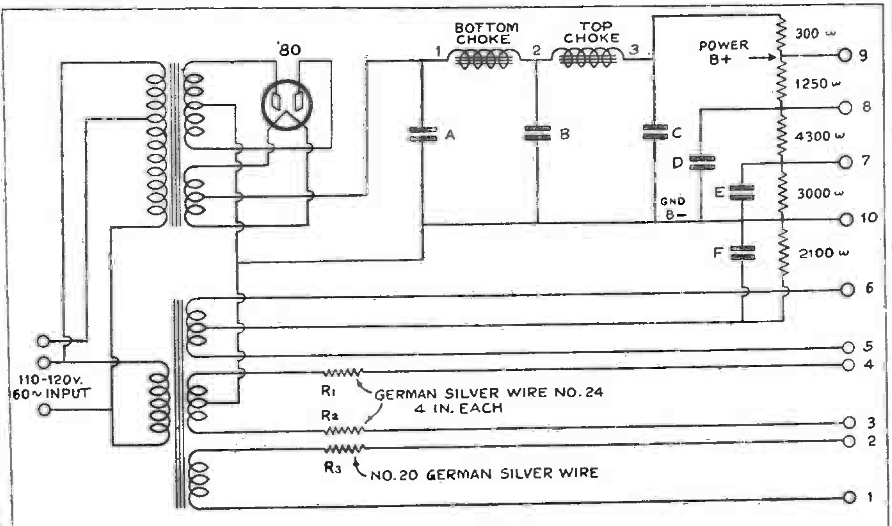

FIG. 7

Wiring of Model "G" power pack. The values of the condensers are as follows: A, 2-mf. (2,000); B, 2-mf. (2,000); C, 6-mf. (2,000); D, 4-mf. (1,000); E, 2-mf. (1,000); F, 1-mf. (1,000). The numerals in parentheses indicate the break-down potentials.

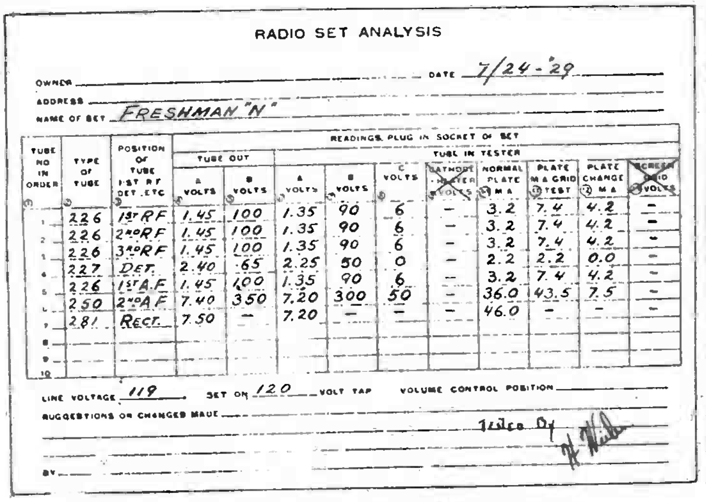

RADIO SET ANALYSIS

OWNER

DATE 7/24-'29

ADDRESS

NAME OF SET FRESHMAN "N"

Tube No. in Order ①	Type of Tube ②	Position of Tube 1st RF Det. etc. ③	Readings, Plug in Socket of Set: Tube Out: A Volts ④	B Volts ⑤	Tube in Tester: A Volts ⑥	B Volts ⑦	C Volts ⑧	~~Cathode-Heater Volts~~ ⑨	Normal Plate MA ⑩	Plate MA Grid Test ⑪	Plate Change MA ⑫	~~Screen Grid Volts~~ ⑬
1	226	1st RF	1.45	100	1.35	90	6	–	3.2	7.4	4.2	–
2	226	2nd RF	1.45	100	1.35	90	6	–	3.2	7.4	4.2	–
3	226	3rd RF	1.45	100	1.35	90	6	–	3.2	7.4	4.2	–
4	227	DET.	2.40	65	2.25	50	0	–	2.2	2.2	0.0	–
5	226	1st A.F	1.45	100	1.35	90	6	–	3.2	7.4	4.2	–
6	250	2nd A.F	7.40	350	7.20	300	50	–	36.0	43.5	7.5	–
7	281	RECT.	7.50	–	7.20	–	–	–	46.0	–	–	–
8												
9												
10												

LINE VOLTAGE 119 SET ON 120 VOLT TAP VOLUME CONTROL POSITION

SUGGESTIONS OR CHANGES MADE

Tested By

BY

Fig. 5. An analysis of the Model "N" characteristics.

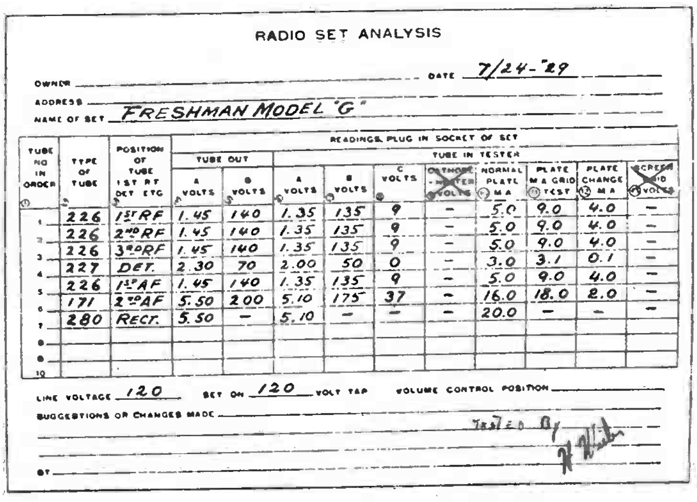

RADIO SET ANALYSIS

OWNER

DATE 7/24-'29

ADDRESS

NAME OF SET FRESHMAN MODEL "G"

Tube No. in Order ①	Type of Tube ②	Position of Tube 1st RF Det. etc. ③	Readings, Plug in Socket of Set: Tube Out: A Volts ④	B Volts ⑤	Tube in Tester: A Volts ⑥	B Volts ⑦	C Volts ⑧	~~Cathode-Heater Volts~~ ⑨	Normal Plate MA ⑩	Plate MA Grid Test ⑪	Plate Change MA ⑫	~~Screen Grid Volts~~ ⑬
1	226	1st RF	1.45	140	1.35	135	9	–	5.0	9.0	4.0	–
2	226	2nd RF	1.45	140	1.35	135	9	–	5.0	9.0	4.0	–
3	226	3rd RF	1.45	140	1.35	135	9	–	5.0	9.0	4.0	–
4	227	DET.	2.30	70	2.00	50	0	–	3.0	3.1	0.1	–
5	226	1st AF	1.45	140	1.35	135	9	–	5.0	9.0	4.0	–
6	171	2nd AF	5.50	200	5.10	175	37	–	16.0	18.0	2.0	–
7	280	RECT.	5.50	–	5.10	–	–	–	20.0	–	–	–
8												
9												
10												

LINE VOLTAGE 120 SET ON 120 VOLT TAP VOLUME CONTROL POSITION

SUGGESTIONS OR CHANGES MADE

Tested By

BY

Fig. 6. A chart for checking the Model "G."

the resistance is 300 ohms. So much for the resistance tests.

If you do not get any voltage from the detector tap, condenser E is probably shorted. If you do not get voltage from any but the power tap, condenser D is probably shorted. No voltage from any "B" tap, providing everything else is O.K., may be due to faulty condensers A, B or C. Disconnect from rest of circuit, switch on tester to position 1, and test. If they are bad, install new condenser or pack.

Voltage Conditions

To test high-tension secondary, put "A" and "B" of continuity tester on grid and plate contacts of socket in pack; the meter should read.

The filament transformer is next; posts 1 and 2 should show 1.60 volts, A.C.; 3 and 4, 2.25; 5 and 6, 5.00 to 10.00 (This is without a load and using an A.C. 0-7½ voltmeter. Of course, it will not accurately indicate 10 volts, but an approximation may be arrived at by observing the manner in which the needle swings across the scale. This overload is within the safety limits of the meter design; but only experience will enable the service man to handle his meters with proper discretion). Plate voltage, without load, from posts 10 to 7 should be 45 to 60; 10 to 8, 130 to 155; 10 to 9, 155 to 200, using a high-resistance voltmeter with a 0-250 scale. These voltages should be obtained with a 120-volt A.C. line supply, and the "120-V" tap on the transformer in use.

The grid bias on the '71 should be about 37 volts, at 170 volts "B."

In Fig. 6 we have a list of readings taken from a Jewell "Type 199 Analyzer."

The Freshman Model N

THE second receiver to be described is the Freshman "N." This model has an untuned antenna stage; being untuned, this tube amplifies everything and it is claimed, by some technicians, that its use results in greater broadness of tuning and increased interference from static. However this may be, the connection serves excellently to prevent the variations, always found in antenna installations, from reacting on the tuning circuit; which would unbalance the circuit resonance at certain points in the tuning range. The untuned stage is followed by two of tuned radio-frequency, using '26 tubes stabilized through the use of the "Equaphase" method of neutralization (the stabilizing resistor is 730 ohms, tapped at 350 ohms. It is to this tap the "B+" connection for that particular tube is made. There are three of these stabilizers); a tuned detector, using the grid-leak-and-condenser method of detection; and, finally, two audio stages, employing a '26 for the first and a '50 for the last.

Now we will get down to the real analysis of the set. If there is a loss of selectivity it can be attributed to too long an aerial. The remedy is to shorten this. Defective tubes, also, may cause broad tuning, and the remedy is to replace with others having proper characteristics.

A condenser which shorts in one or more positions may cause the broad-tuning effect, in a gang control; and the remedy is to bend the plates which touch, until they clear, or else replace the variable condenser. For test of a shorted volume control, use the continuity tester shown in Fig. 2; if the short is visible, repair it. So much for the selectivity problem.

The "Alcohol Rub"

If the set is noisy, use apparatus described in Fig. 2. Put lead "A" on antenna post and lead "B" on ground post. Rotate volume control. If there is noise in phones, clean arm and resistance strip with alcohol or whiskey; preferably, the former. (This may "sound" like a joke, but it isn't. Ask a customer if he has any alcohol you can use, and he will probably offer liquor—which he has had for "medicinal" purposes, of course.) Next, put lead "A" on grid post of '27 socket. If noisy, replace the 3-meg. leak (although, before replacing try condenser alone—without leak.) The detector grid condenser has a value of .00025-mf.

To test transformer primary in first audio, put lead "B" on terminal marked 1 in Fig. 3, and lead "A" on plate post of '27 socket. For primary of second A.F. transformer, change "B" lead to No. 2 in Fig. 3, and put lead "A" on plate post of first audio socket. For secondary of first audio, place "B" lead on ground post and lead "A" on grid post of first audio socket. For second A.F. secondary, leave "B" on ground and put "A" on grid post of second A.F. socket. If there is any noise in phones during these tests, take the defective unit out and heat it care-

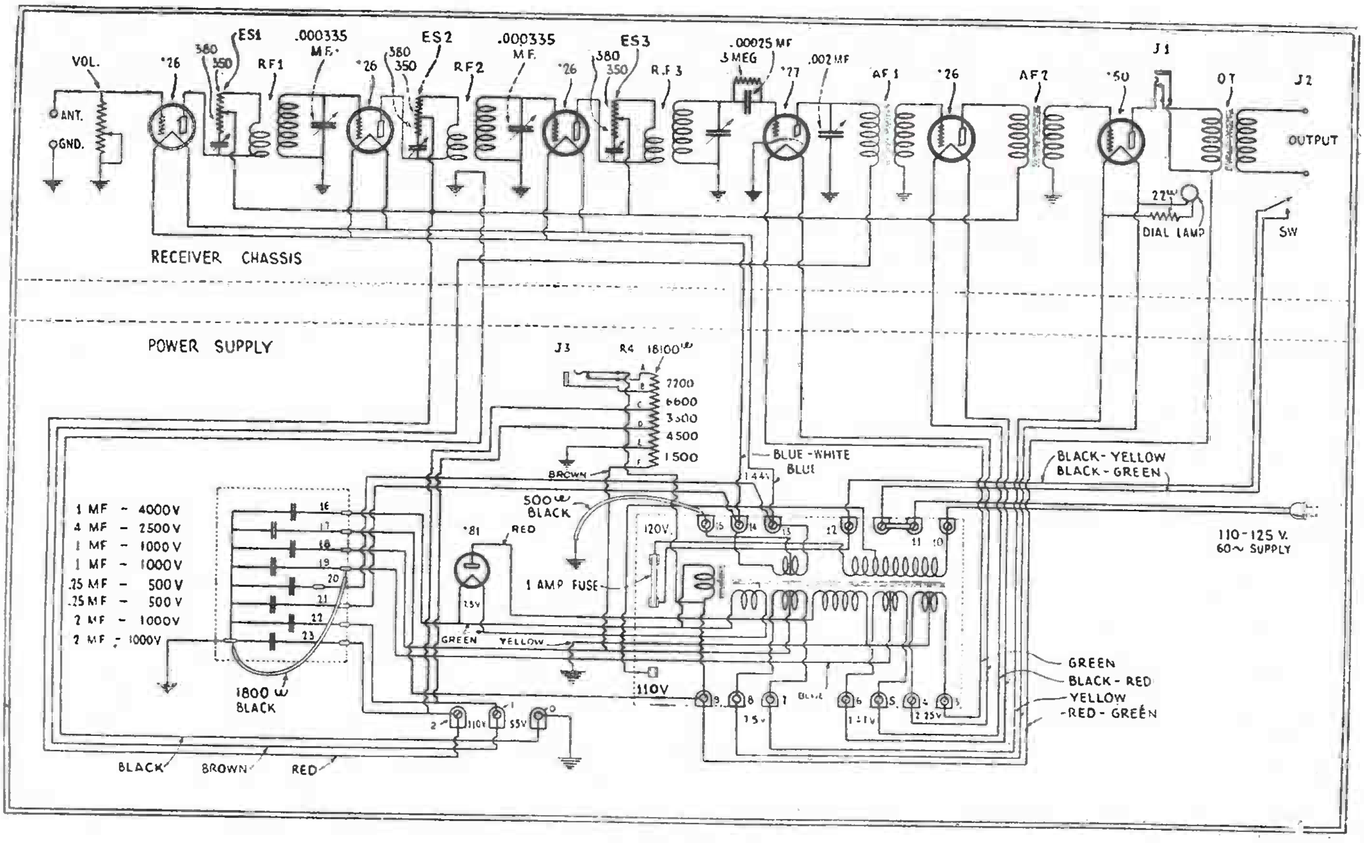

Fig. 10

The Freshman "Model N" and its power pack; the numbering of the terminals shown here may be compared with that in the diagram of the layout on the following page. The capacities and ratings of the condensers in the power unit are shown opposite each, respectively, at the left. Note the [illegible] 1800-ohm resistor lead shown here.

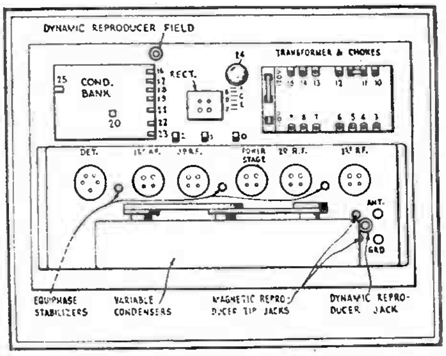

Fig. 9

Layout of the "Model N" and its power pack, indicating numbers of terminals mentioned.

fully on a stove; this should drive out moisture. If the transformer is still noisy, replace with a new one.

To test for open transformers, volume control, grid leaks, or shorted grid condenser, use same procedure; but test with the continuity tester shown in Fig. 1.

Occasionally we get a "snap"; that is, a service call which is very simple, such as for a dial light which fails to do its duty. If the lamp does not light, it may be due to three things: (a) a bulb which has run its limit (b) a burnt-out 22-ohm series resistor (remedy, repair or replace); or (c) excessive voltage due to a shorted series resistor (remedy, remove short or replace with another resistor). As an emergency repair, a 25-ohm rheostat may be substituted

Power Pack Tests

Now to the power pack. If your '27 does not light, put lead "A" of continuity tester on No. 3 terminal in Fig. 3, and "B" lead on No. 4. The meter should show a reading. If none of the radio-frequency tubes light, put "A" lead on No. 13 and "B" lead on No. 14; meter should register. If first audio is unlit, put A on terminal 5 and B on terminal 6; reading should be obtained. If '50 does not light, put A on 7 and B on 8. So much for the filaments.

Grid and Plate Potentials

If no grid-bias reading is obtained on the R.F. tubes, "A" lead of Fig. 1 tester goes on No. 15; "B" on ground end of R.F. transformer which does not show a bias voltage. Lack of continuity indicates a poor connection on coil or else, the 500-ohm grid-bias resistor is "shot." No bias on first audio calls for lead "A" on No. 19 and "B" on grounded condenser can. If no continuity, replace 1,800-ohm resistor (this is the black spaghetti-covered lead on condenser can). No bias on '50 tube is checked by "A" on No. 18 and "B" on grounded terminal of resistor shown as 24 in Fig. 3. If defective, it is to be replaced with a good 1,500-ohm unit.

The "B" potentials are next checked. If test shows no voltage on the detector, when tested with the high-resistance voltmeter connected between 0 and 1, it should be followed by connecting the continuity tester between 24*C* and 24*D*; "A" on the former and "B" on the latter. If open, replace with 3,300-ohm resistor; if detector reading is too high, this portion is shorted. In case of no R.F. or first A.F. voltage, test between 24*B* with A and 24*C* with B; if open, it is the 6,600-ohm resistor which has gone. If detector portion or first A.F. section is shorted, get an 18,100-ohm (net) resistor, tapped at 1,500, 6,000, 9,300, and 15,900 ohms.

The condenser bank consists of one 1-mf. (4,000) section, No. 16; one 4-mf. (2,500) No. 17; one 1-mf. (1,000) No. 18; one 1-mf. (1,000) No. 19; one 0.25-mf. (500) No. 20; one 0.25-mf. (500) No. 21; two 2-mf. (1,000) Nos. 22 and 23. (Figures in parentheses are the working voltage ratings.) Test with "A" lead on any of above numbers and "B" on the grounded terminal of condenser can, after removing all "+" leads from the condensers.

Test from plate of '81 to ground to check high-tension transformer, using "A" and "B" leads to test choke; "A" lead on "F—" post of ' 81 choke, and "B" lead on No. 9 of Fig. 9

Color Code

The color code used in this receiver is as follows: (Note that while an A.C. circuit has, of course, no polarity, sockets are often marked with distinguishing letters.)

First R.F. "F—" post, blue and white; first R.F. "F+" (A.C. voltage, 1.44), blue; detector (2.25 volts) green; first A.F., (1.41 volts) black and red; second A.F. (5 volts) yellow. The plate circuit includes the negative or "0" of Fig. 9, which is black; No. 1 (55 volts) is brown; No. 2 (110 volts) is red; No. 9 (350 volts) is red and green.

PUSH-PUSH RECEIVERS

Two interesting receiver designs, one for operation on battery power, and the other on 110 V., D.C., are described

ALTHOUGH it may at first be thought that the push-push amplifier has value in the field of high-power amplification, a little study of the subject will show that this is not quite true. The writer shows in two of the accompanying figures just how the system is valuable in the lowest powered equipment in the radio field: the direct-current operated receiver; and the dry-cell powered receiver which may be employed in rural districts where power systems have not as yet penetrated, or on boats, where it is the most economical form of operation.

Let us consider first the power output usually available in the receivers of these classifications so that a standard of comparison may be established. The D.C. receiver usually employs either two '45's or four '71A's in its output circuit. Either method of operation is wasteful of power because of the high filament current required, but particularly so in the case of receivers using the '45. The power output available about 700 milliwatts from two '45 tubes operated in push-pull with a plate voltage of only 100. Four '71A tubes in a parallel push-pull structure can deliver about equal power without distortion. In the case of the battery-operated receiver, we have, in the two-volt classification, the '31 tube which will deliver at 135 volts about 150 milliwatts per tube; or about 400 milliwatts in push-pull. Two '31 tubes draw a total of 13.6 ma. from the "B" batteries.

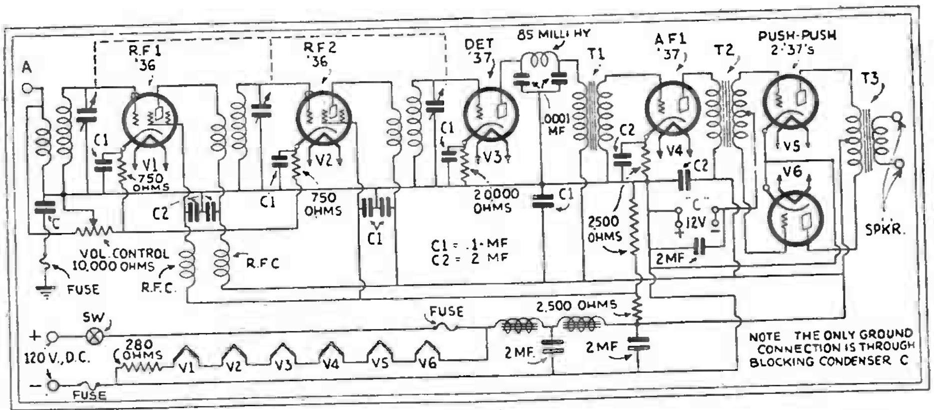

Fig. 2

Schematic circuit of a receiver designed for operation on 110 V., D.C. "General purpose" '37's, V5-V6, develop 1,200 milliwatts output.

The Push-Push Amplifier and the 110-Volt D.C. Receiver

Let us consider the advantages to be gained from the push-push amplifier in either of these receivers. First we will take the D.C. receiver such as is necessary in certain metropolitan areas.

The most satisfactory tubes at present available for use in the D.C. set are the new automotive types with 6.3 V., .3-A. filaments. We have the single '38 pentode available with a power output of 200 milliwatts; or about 500 milliwatts in push-pull. Now let us see what the little '37 "general purpose" tube will do for us in the PUSH-PUSH connection. In Fig. 1, there are shown the curves of the '37 operated as a push-push amplifier with a plate voltage of 100 and a negative grid bias of 7 volts. The load impedance at which the curves are taken is 1500 ohms, giving a possible power output of 1200 milliwatts is available—more than twice that available with the power output pentodes of the 6.3-volt line!

A grid swing of 40 volts is necessary,—readily available with a similar tube in the first A.F. stage working into a low ratio interstage transformer such as is necessary in push-push operation because of the grid current drawn.

A transformer for the output coupling will be difficult to find because of the small load required. We may, however, employ a transformer designed for use with the '45 tube instead, with a small sacrifice in the output power obtainable. The power will still be far in excess of that obtained with the two pentodes in the push-pull connection. In Fig. 2, there is shown the circuit schematic for a D.C. receiver employing these tubes. The receiver is self explanatory in so far as the other circuits are involved.

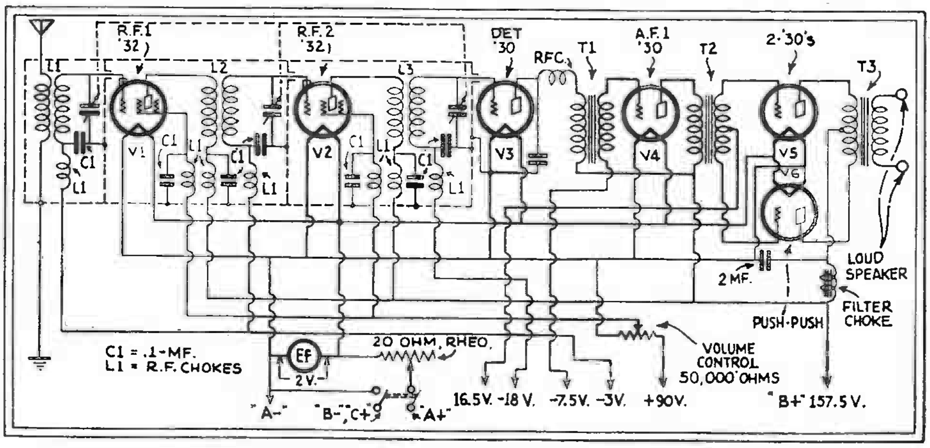

Fig. 4

Diagram of connections for incorporating "push-push" power amplification in a battery-operated radio receiver. The "general purpose" '30's, V5-V6, develop 1,000 milliwatts output.

The Battery-Operated Receiver Assumes The Push-Push Role

With the battery-operated receiver, we would normally employ the '31 with a power output of 150 milliwatts at 135 volts and a plate current of 6.8 ma., or about 400 milliwatts with a plate current of 13.6 ma. in push-pull. These tubes have the disadvantage of requiring a filament current of .130-amp. whereas the associated tubes of the 2-volt line take but .06-amp. There is also a pentode output tube incorporated in this line but having a filament current rating of .260-amp.—more than four times the drain on the batteries imposed by the general purpose tube of the line—the '30, and with a possible power output in push-pull of 1200 milliwatts or so. The filament consumption of the tube renders it unsuited for use with the air-cell battery—the drain for two tubes in push-pull being more than a half ampere for the filament current and 34 ma. for the "B" supply. We can therefore see that whereas we can obtain quite a kick from the two '33 pentodes in push-pull, the plate current and filament drain make them impractical for use.

In Fig. 3, we have the curves for the '30 tubes in the push-push arrangement—where it can be clearly seen that the power output available from these tiny general purpose tubes is 1000 milliwatts when operated in this connection. Furthermore, it should be noted that the average plate current drawn will be of the order of 14 ma. for the two tubes, but because of the fact that the signal is not always at its peak power the current drain during operation will not exceed an average of 7 or 8 milliamperes for the two tubes. This is not only easy on the "B" batteries but we have achieved our power output with the small tube of the line which permits our drawing but .36-amp. for the six-tube receiver, shown in Fig. 4. This is well within the limits of the air-cell battery. The plate voltage demands total 157.5 volts and a negative biasing potential of 15 volts.

Here again it is not necessary for us to employ a special transformer in order to improve the possibilities; for a transformer devised for operation with the '45 tube will "stand the gaff." In view of the much higher efficiency obtainable where truly efficient matching is available, it is to be hoped that manufacturers will shortly supply input and output transformers truly suited to the requirements of the push-push amplifier.

In closing, one comment seems in order as many have asked why greater power output could not be obtained with the '45—'47—'71A, etc., if used in the push-push connection. The difficulty lies in the fact that these tubes do not operate in a satisfactory manner in the *positive grid range* into which push-push operation swings the tubes.

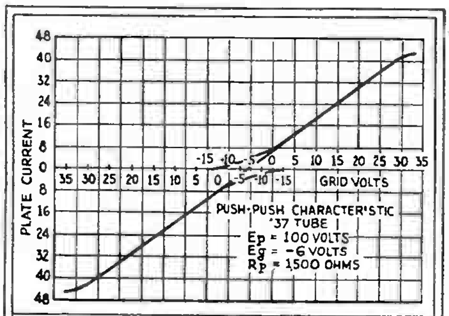

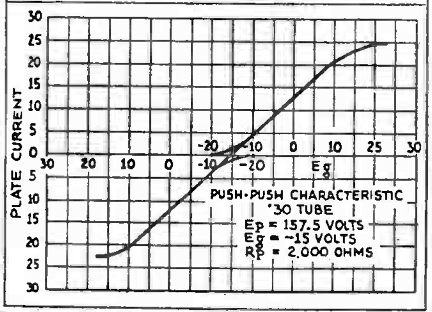

Fig. 1, above. *Characteristics of the '37.*

Fig. 3, below. *The '30 tube's characteristics.*

The writer has some faith in the possibilities of the pentode when thus operated but as yet has not been able to evolve the special circuit arrangements necessary to undistorted operation of the pentode tubes in the push-push arrangement. He feels not overly optimistic in saying that within a short time the data on such operation will be forthcoming.

The present difficulty with the low-impedance power tubes—such as the '71A and the '45—lies in the fact that the grid current drawn is so great that unless the input transformer feeding the push-push stage is of exceedingly low ratio, the grid resistance will be reflected into the plate circuit of the preceding stage—playing "hob" with the quality.

Two 50-watt tubes with 1000 volts on the plates can be called upon to deliver about 200 watts of undistorted audio power output; or a pair of '10's operated from mercury vapor '80's at a plate voltage of 500 to give the same output power usually necessitating a pair of 50-watt tubes with a plate voltage of 1500.

The power output from the system is given directly from the formula:

$$P = Ip^2 Rp$$

where Ip max. is the maximum plate current obtained during the positive peak of each half-cycle. Rp is the load resistance.

Troubles in Mass Production

Knowing Factory Troubles Sometimes Aids The Service Man

YES, there are troubles in radio—plenty of them. But so far as Mrs. Jones, who just received her latest umpty-dyne set for Christmas is concerned, radio troubles may just as well not exist. She has never heard of them and, even though she had done so, it would be difficult for her to conceive how there could be any troubles encountered in building radio receivers.

Why, all they have to do at the factory where they build them is to take a number of parts and fasten them together with screws (or eyelets, if she has ever heard of them except as components of women's wear).

Those of our readers who have had anything to do with the building of receivers certainly know better than this; and so especially do those who make it their business to service radio sets. But, even at that, it may seem strange that, in building radio receivers in large quantities, there is so much opportunity for the occurrence of troubles, which are not even suspected by those who build their own, or by those who make radio kits for the customer to assemble himself, or even by those who service a great many receivers.

The Service Man says: "I can thank my lucky stars that they do have a lot of trouble—because it is from this that I make my living—but, confidentially speaking, I don't understand it at all."

The Set Builder's Viewpoint

Let's look into the matter a little further. Why doesn't the Service Man, as a rule, or the parts-and-kit manufacturer, or the home set builder realize these difficulties? The answer cannot be given in a few words; but, among the principal reasons, we may cite the following:

In the first and perhaps the most important place, all these people happen to fall, in a general way, into the category of "custom-set builders." Take, for example, the man who builds his own set. After assembling and wiring it, he tries it out on the air, and finds it does not work as it should. Naturally, he first takes the blame on himself; he feels that he has made a mistake somewhere in the assembly or in the wiring of the set. Then he spends a lot of time looking for the trouble. Eventually, he finds and corrects it, and the set works wonderfully.

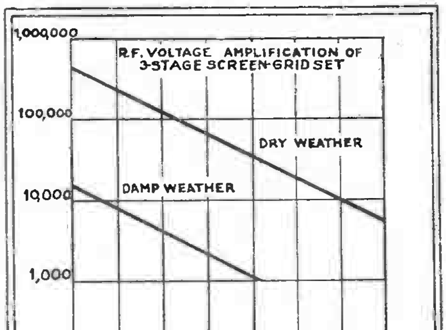

Fig. 1

This is an engineer's diagram on a scale showing that the measured sensitivity of a commercial receiver is twenty-five times as high in fair weather.

This is all very satisfactory when there is any actual break-down in the circuit, such as a burnt-out transformer winding. But what about the case where the set works very well for a while and then, all of a sudden, the operator finds that the sensitivity is far below what it was last week? "Why," he says, "last week I could hear WXYZ all over the house, and today I can't get it at all."

Then, next week, he finds that things have returned to normalcy, and that he can not only hear that station again, but hear it now louder than ever.

No Allowances Made

Now, let us see what this condition may lead to in the case of a factory-built set. If Mrs. Brown went into a dealer's store to buy a certain set during the week when its sensitivity was low, she naturally would change her mind and say that this set was not as good as Mr. Black's, and that it was only by accident that the manufacturer of the latter set turned out a good one. So a sale is lost to the manufacturer.

Now, what could cause difficulties like this? This tale I am telling is characteristic of a great number of difficulties which arise, and the causes of these troubles are many—very many. And the ways in which they manifest themselves are as varied as the causes which produce them.

Manufacturing Coils

For the first example, let us take the case described above. Economic reasons are forcing more and more manufacturers to use paper forms on which to wind their radio-frequency transformer coils. Paper forms are much less expensive than forms made of bakelite or other similar material. But, in using them, proper precautions must be taken in the matter of impregnating them against moisture. When this is done, it is found that paper forms are quite satisfactory for all practical purposes.

What precautions are necessary? It is not sufficient to merely coat the winding with a varnish or lacquer. This would actually imprison within the paper any moisture which might be there before the impregnation. The forms, *after punching or drilling*, should be well baked, in order to drive out all moisture, and then *dipped*, (not merely painted over) in lacquer or varnish. The varnish should then be dried, slowly, in an oven.

The form is then wound, after which it may again be dipped, or coated by hand. If silk-covered wire is used, instead of enamelled wire, for the secondary winding, there should be an additional heating process before applying the coating to the wire.

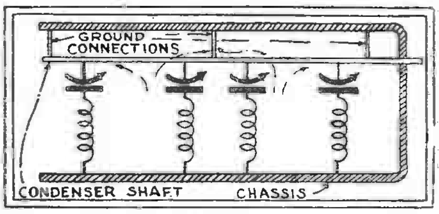

Fig. 2

The many grounds on a set chassis are not always low-resistant; special wire interconnections cost higher in labor.

Now, many of you will say that this is not news. But it is surprising how much trouble has arisen from attempts to eliminate some of these steps in the process, in order to save labor or material costs, or both. And this problem seems to be more important in connection with screen-grid sets than in our previous models; since, in the former, *the amplification (or sensitivity) is inversely proportional to the resistance of the tuned circuit.*

In dry weather, untreated coils may have an R.F. resistance of, perhaps, 10 ohms; whereas, in humid weather, enough moisture may be absorbed to cause the resistance to rise to double or triple the original value. It is an easy matter, therefore, for the sensitivity of a three-stage receiver to drop down to one-tenth of what it ought to have, or even less than that. This has been proven, time and again, by baking an entire receiver in a drying oven and making measurements before and afterwards. The effect becomes very serious during protracted periods of rainfall, when the humidity of the air measures nearly 100%.

It is not necessary to go into detail; but we may merely mention the well-known need for properly impregnating A.F. transformer windings and those of chokes and power transformers. In the power transformers and chokes, good impregnation is necessary in order to safeguard against breakdown under the high voltages encountered in these coils; while, in A.F. transformers, the main reason is to prevent electrolytic action. This, when moisture is present, eats away the wire, and soon results in an "open" coil.

Mass Production Problems

Another important cause of variations in receivers is a matter of design. For example, with a completely-shielded screen-grid tube circuit, the grounding system is of extreme importance. It is common practise to build receivers upon a painted chassis, the paint being scraped off where ground connections are to be made.

The difficulty with this practise is that it involves human frailties. When receivers are being made at the rate of a thousand or two thousand a day, it is evident that the man who is doing the "spot-facing" may miss one or more of the places to be spot-faced, in quite a few chasses. As a consequence, the ground connection at those points may or may not be good. If it is good at the factory, and passes the inspection tests, it may change during shipment, because of the jarring; and, when the dealer or customer gets the receiver, there may be no ground connection at all. The set then may either oscillate or be "dead." A good ground system is most important, in screen-grid sets, in order to prevent oscillation. On account of this, there is a growing tendency to use cadmium-plated chasses instead of painted, sprayed, parkerized or other surfaces which are non-conducting.

Another cause of difficulties, also a matter of design, arises in connection with the theory of "cause and effect." For example, there are many places in radio receivers, where small changes may produce large effects. We generally speak of such conditions as "critical." In neutralized circuits, for instance, in which things such as inadequate shielding or grounding, or improper placement of parts occur, the effect may be such as to make the adjustment of the neutralizing condensers entirely too "critical." As a result, it is difficult to keep them in adjustment, when other changes which we cannot avoid are occurring; as for example, changes of tube constants with the strength of signal, regulation of the power supply, etc.

Again, in screen-grid sets, it is possible to obtain a stable condition by permitting the feed-back currents of the various stages to "buck" each other. This involves an incomplete grounding system; and it has been found that the receiver can be made stable with only a small amount (and corresponding reduced cost) of R.F. by-passing. The reduction of the cost is quite a temptation to use this method of attaining stability, but the method is more or less dangerous; since, if any of the few remaining ground connections become imperfect, the balance between the feed-backs will be destroyed and oscillation will result.

As another example, balancing schemes are often used in power-supply circuits, in order to keep the hum down. Some of these schemes work out very successfully; but others are not quite so successful, because of their critical nature.

And so we might go on and on, describing one trouble after another, for there are plenty. But you must not get the idea, from this article, that no commercial radio sets are any good. What we are trying to bring out is that, in large-scale production, there arise troubles of which the average radio Service Man is not aware, and which, quite often, do not really interest him. It is quite possible and practical to avoid all these difficulties but, unfortunately, things such as these are learned only through experience.

It is not possible, when building sets at the rate of a thousand or more a day, to hunt for these difficulties in every set; for this would involve an enormous labor cost and drive the price of the set sky-high. The remedy is to so design the set, and to adopt such practises in manufacturing, that such difficulties do not arise. It is not well to economize too rigidly. An ounce of prevention is worth a pound of cure, in radio manufacturing as well as in medicine.

The Effective Use of By-Pass Condensers and Resistors

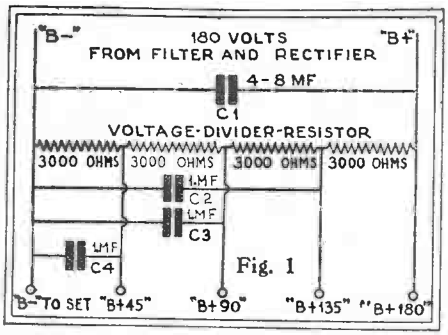

Fig. 1

Here is a voltage divider, of the typical arrangement found in a power pack. The condenser C4 is only one-third as good a by-pass as C2, of the same size.

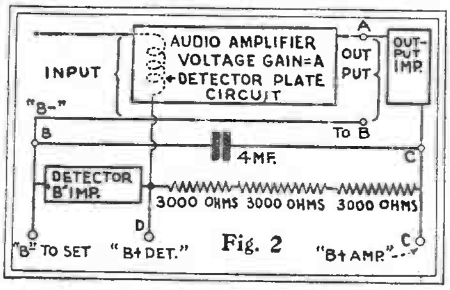

Fig. 2

When we mentally replace a section of the voltage divider by the plate impedance of the detector, we see at once that part of the variations in the audio output must be impressed on the detector's plate voltage.

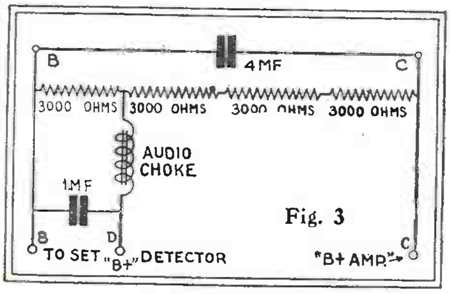

Fig. 3

Comparing this with Fig. 2, we see that the choke in the detector plate lead will keep out a great deal of the feed-back through the power unit.

RESISTANCE units of various values and types, together with by-pass condensers of differing capacity values and voltage ratings, are essential components of electric radio sets and are required to some lesser extent in battery-operated sets.

If we have a limited amount of by-pass capacity and a number of resistance units, and want to arrange a system of voltage distribution and by-passing suitable for operating a particular radio set, we may try one arrangement and find that the radio set does not work satisfactorily; even though all tubes are supplied with suitable operating voltages. Yet, by simply re-arranging the same condensers and resistors it may be possible to get satisfactory operation.

Reducing Undesirable Coupling

Disregarding A.C. hum (which may be reduced or eliminated by better A.C. tubes and more effective filter circuits) the main difficulty in obtaining best tone quality with A.C. operation is to limit or prevent interstage-coupling effects.

In battery-operated sets, if there is any serious interstage coupling effect, a separate "B" battery is often recommended to operate one or two of the tubes, especially the detector tube.

It is possible to design "B" eliminator devices so that they have practically the same characteristics as good "B" batteries; but relatively great amounts of condenser capacity, and perhaps some devices such as voltage-regulator tubes, may be required for satisfactory results. The idea here is to make the A.C. impedance across the "B" terminals so low that it does not seriously affect the operation of radio sets of ordinary types. Condensers of very large capacity are expensive; unless they are of the electrolytic type, which is used in some commercial sets but not so widely as paper condensers. Voltage-regulator tubes do not seem to be popular; possibly because of their cost and the load they put on the "B" power rectifier.

The best results from any radio set, however, will be obtained when undesired or unintentional coupling effects between the several tubes employed are kept very small by effectively segregating the A.C. and D.C. plate and grid voltages of one tube from another.

As theoretical and mathematical consideration of circuit effects is bothersome to follow, it is important only to keep in mind the approximate coupling effect between any two circuits and the amplification between them; and to know the approximate effectiveness of such resistors, condensers and chokes as can be used to separate such circuits.

Resistors and Condensers

Where a resistor is used to regulate the "B" or "C" voltage applied to a tube, we are generally advised to connect a by-pass condenser across this resistor. Following this advice will not hurt anything and may help; but *we might just as well save its cost and the bother of connecting it* unless we are sure that the condenser *accomplishes its purpose.*

A condenser has *capacitative reactance* (measured in ohms) and a resistor has *resistance* (measured in ohms) and the two together form an *impedance* (which is also measured in ohms) *which is not their sum.* The actual value of an impedance of this type may be found by multiplying the reactance by the resistance, and dividing the product by the square root of the sum of the squares of the reactance and the resistance.

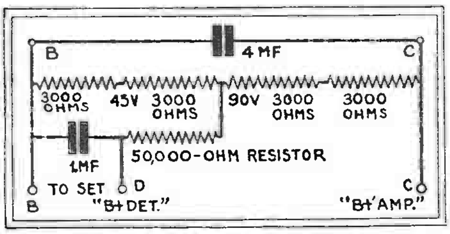

Fig. 4

The connection shown above greatly reduces feed-back from the power stage to the detector, through the "B" supply.

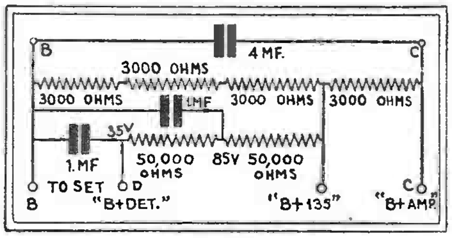

Fig. 5

The connections shown above are even more efficient than those of Fig. 4 to isolate the different amplifying circuits.

If the resistance and the reactance have equal values, the impedance will be .707 times the value of either. This does not represent a material reduction, which is to say, an effective use of the by-pass condenser. If the by-pass condenser is to do any appreciable good, its reactance should be materially lower than the resistance which it by-passes. No exact ratio is important; though it would appear that a by-pass condenser is hardly worth while if its reactance is more than one-fifth the resistance which it by-passes. (The reactance of a condenser may be considered to be in round numbers 1600/*fC*; where *f* is the frequency, in hundreds of cycles, and *C* is the capacity of the condenser in microfarads.)

CAPACITATIVE REACTANCES
(In Ohms)

Audio Frequencies

Capacity Mf.	25 Cycles	100 Cycles	1,000 Cycles
0.1	64,000	16,000	1,600
0.5	12,800	3,200	320
1.0	6,400	1,600	160
1.5	4,267	1.067	107
2.0	3,200	800	80
2.5	2.560	640	64
4.0	1.600	400	40
5.0	1,280	320	32
8.0	800	200	20
10.0	640	160	16
20.0	320	80	8
50.0	128	32	3

Radio Frequencies

Capacity Mf.	50 kc.	520 kc.	1,500 kc.
.0001	32.000	3,200	1.067
.0005	6.400	640	213
.001	3.200	320	107
.002	1.600	160	53
.006	533	53	18
.01	320	32	11
.05	64	6	2
.1	32	3	1

In an audio amplifier using good A.F. transformers, one may expect to get good amplification of frequencies near 100 cycles, but not much below that figure; and by-pass condensers to be used in such an amplifier should be considered on the basis of 100 cycles. If considered satisfactory at this frequency, the by-pass condensers will be more effective at all higher frequencies. In other words, the effectiveness of by-pass condensers should be considered on the basis of the *lowest frequency effectively passed* by the amplifier. With a high-quality audio amplifier, the basis of figuring may be 50 or even as low as 25 cycles; and condensers of two to four times the capacity satisfactory in a 100-cycle amplifier may be necessary.

Practical Applications

An output arrangement, similar to that commonly employed for "B" eliminators or power packs, is shown diagrammatically in Fig. 1. An output voltage-divider resistor, having four sections of approximately 3,000 ohms each, and a 4-mf. condenser are connected in parallel across the full-voltage output; which then may be approximately 180 volts. The voltage across *any portion* of this resistor "network" will be a certain fraction of the total voltage, represented by the resistance of this portion divided by the total resistance. In the instance given, this will be 45 volts for each of the four equal sections. The usual condenser block, designed for use with power packs, provides a main output condenser of from 4 to 8-mf. capacity, and additional 1-mf. condensers to be connected across the output taps from "B—" to each "B+" post.

Now the question is, how efficient is each of these by-pass condensers, in reality, and can any of them be used more effectively? At 100 cycles, the 1-mf. condensers have a reactance of 400 ohms. Condenser C1 effectively by-passes a 12,000-ohm resistance with a reactance of only 400 ohms, a ratio of 30 to 1 (well within our suggested ratio limit), which means that the by-passing is effective and worth while. Condenser C2 by-passes a 9,000-ohm resistance with a reactance of 1,600 ohms, which is fairly effective by-passing. Condenser C3 does not so well, and condenser C4 rather poorly; because the last by-passes a resistance of 3,000 ohms by a reactance that is no lower than 1,600 ohms.

Where a condenser does not by-pass a resistor effectively, it can be omitted without serious detriment. By-passing resistors of 2,000 or 3,000 ohms or less by condensers of 1-mf. capacity, or thereabouts, although common practice, does not do much good at low audio frequencies. Such by-passing is effective at radio frequencies; since a condenser having a reactance of 1,600 ohms at 100 cycles will have a reactance of only 0.16-ohm at 1,000 kilocycles, which is about the middle of the broadcast range. Even though middle- and high-range audio frequencies may be satisfactorily by-passed by such a condenser, the low frequencies cannot be neglected if good results are to be obtained. We must find a way to obtain effective by-passing at the lowest frequency at which the particular circuit is expected to work.

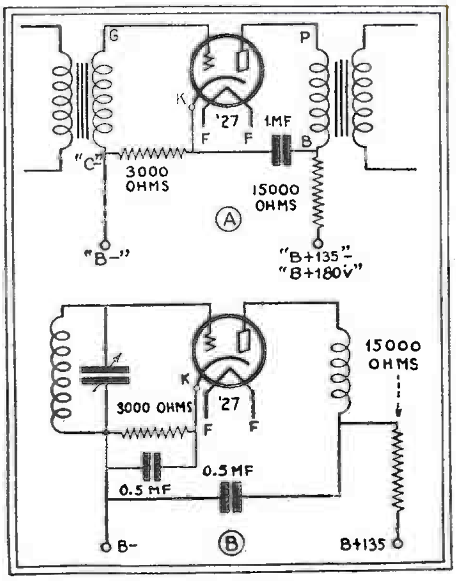

Fig. 6 (A-B)

The '27 type tube in an audio stage, as at A, frequently operates better without the by-pass around the grid-bias resistor, desirable in the R.F. stage shown at B.

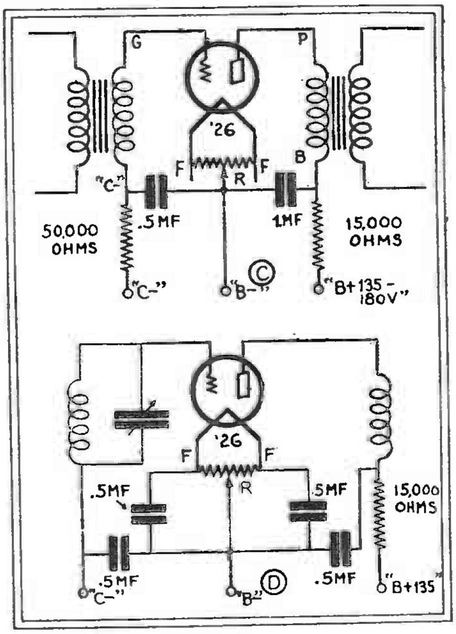

Fig. 6 (C-D)

The '26 type tube or even a '45—with suitable circuit changes—may be used in an audio stage, as at C. The by-passing and balancing needed in an R.F. stage (D) is discouraging.

Separation of Circuits

The need for separating current supply circuits for tubes used in an amplifier may be shown by reference to Fig. 2. For simplicity, the possible coupling or feed-back effect between detector and output circuits only will be considered. Detector and output plate circuits are operated from a single plate-current supply device; and the audio amplifier gives a voltage-amplification of, let us say, 200 between the detector output and the final audio output. (A two-transformer audio amplifier having transformers of 3 to 1 ratio, with a '26 and a '71A tube, will give about this amplification.) With such an amplifier, if 0.1-volt is applied to the input, 20 volts will be impressed across the output, at any frequency within the range amplified. Now, if there is a feed-back from the output of the amplifier into the input, through the detector plate circuit, and this feed-back is one two-hundredth or more of the output voltage, it will be greater than the original signal input voltage. In other words, a feed-back voltage greater than the intentional input voltage will get into the amplifier and will completely upset normal performance.

How much feed-back can be tolerated with satisfactory performance of the amplifier? If the feed-back voltage is in "phase" or step with the normal input voltage, regenerative amplification will result. In most of the amplifiers commonly used, the phase of a feed-back voltage will be different for different frequencies or between different tubes and, at some frequency or frequencies, the phase will be such as to cause regenerative amplification. Serious feed-back will usually cause some tone frequencies to be either greatly over-amplified or under-amplified, with consequent inferior and unsatisfactory tone quality. Reversing the connections of one audio transformer's winding (a trick that is often suggested to stop motorboating) may stop one strong regenerative feed-back; but another may appear. Generally speaking, good tone quality will not be obtained if feed-back effects are considerable; even though their phase can be changed to a large extent.

If regenerative feed-back exists in an amplifier giving a normal amplification of 200, and it is desired to limit the feed-back so that the amplification is not over 25 per cent. above normal it will be seen that *not over one-thousandth of the output voltage* should be permitted to get back into the input to the amplifier.

The reduction is a matter of degree, and the performance of many radio sets indicates that their designers or constructors have not gone far enough. Since the degree of feed-back reduction necessary depends upon amplification, greater reduction is necessary between the detector and last audio tubes than between the detector and first audio tubes in the usual type of amplifier. (See note at end of article.)

Analyzing the Power Supply

It is not always easy to determine exactly just how much of the output voltage gets back into the input; but, if we have a fair idea where to expect difficulties, and know approximately what can be done to correct them, we certainly are better off than when we work entirely without thinking.

In estimating how much feed-back exists in a circuit such as that shown in Fig. 2, it is seen that the output voltage of the amplifier is impressed across the points "A" and "B;" and a certain percentage of this output voltage will be present across points "C" and "B," where the voltage-divider resistor is used. The A.C. voltage across "B" and "C" may be figured, but we do not need to do this. We are interested only in knowing approximately what portion of the voltage "B-C" is impressed across "B" and "D," the detector supply terminals; and, if this voltage "B-D" is not sufficiently reduced (which will be shown by amplifier trouble or poor tone quality) we want to know how we can effectively reduce this voltage.

Where a voltage is impressed across a condenser and resistor in series, if the condenser's reactance is small compared to the value of the resistor, that portion of the voltage which is effective across the condenser is found, approximately, by dividing the reactance by the resistance. If the portion of the voltage-divider resistance across "B" and "D" is neglected, since the condenser C4 has a capacity of 1 mf. (with a reactance of 1,600 ohms at 100 cycles) 1600/9000 of the 100-cycle voltage impressed across "B" and "C" will be effective across "B" and "D." This is not a satisfactory reduction, in view of the need for reducing feed-back between output and input to one-thousandth. Most of this reduction would have to be accomplished elsewhere in the circuits. Changing the circuit to include a *choke coil,* as shown in Fig. 3, will result in a great reduction of the A.C. voltage effective across the detector supply terminals, if the choke has at that frequency a rather high inductance—30 henries or more.

Economy in Resistors

Since chokes of such high inductance are bulky and comparatively expensive, it is preferable to get desired effects by means of small-sized high-resistance units. Resistance units, when they must pass appreciable current, cause a voltage drop, which requires that a higher direct-current voltage be applied in order to get the desired plate potential across a tube. A detector tube may be operated with a plate current of about 1 milliampere; and a resistor in series with its plate will drop 1 volt for each 1,000 ohms of resistance. As shown in Fig. 4, a 50,000-ohm resistor will drop about 50 volts when used in series with a detector; and one such should be connected to the 90-volt tap if the applied detector voltage is to be about 40. An A.C. voltage of 100-cycle frequency, effective across "B" and "C," will be cut in half at "B-D"; and will be further reduced in a ratio of 16/500, which is that of the condenser reactance across "B" and "D" to the 50,000-ohm resistor.

A comparison of the arrangements shown in Figs. 2 and 4 will show that a 100-cycle A.C. voltage across "B" and "C" will be reduced at "B-D"; to about one-sixth, in the case of Fig. 2, and to about *one-sixtieth* in the case of Fig. 4. Obviously, the latter is ten times as effective in eliminating feed-back effects. In some cases, a two-section filter, as shown in Fig. 5, may be used. It is still more effective; the voltage reduction being to about *one-thousandth.*

Similar resistance-and-capacity filter circuits can be used to advantage in the grid and plate circuits of other tubes, as shown in Fig. 6. In the case of amplifier plate circuits, the plate current will usually be around 2 to 5 milliamperes; and resistors (which *must* be of "heavy-duty" type) of 25,000 to 10,000 ohms will give voltage drops of about 50. The grid circuits of amplifier tubes should not carry or "draw" an appreciable current; and resistors of about 50,000 ohms can be used without need for compensating for any voltage difference.

In Fig. 6A, which shows the use of a '27-type tube in a transformer-coupled audio amplifier, the primary of the output transformer is by-passed directly to the cathode, shunting a 15,000-ohm resistor in series with "B+." It is not, as a rule, necessary to by-pass the 3,000-ohm grid-bias resistor, except when A.C. hum is present; then a 1-mf, condenser may aid.

In Fig 6B, however, the same tube is shown as an R.F. amplifier, in a circuit where the by-pass capacity becomes effective. A half-microfarad condenser is shown; but larger or smaller capacities make little difference.

While the '26-type tube is now but little used, it can be made to give good results in an audio circuit as shown in Fig. 6C. A similar circuit may be used for a single '45 power tube, with the understanding that because of the high plate current and consequent voltage drop, little or no resistance should be introduced into the "B+" lead.

A comparison of Fig. 6D will readily show why the '26-type has been quickly discarded as a radio-frequency amplifier, in favor of the '27 and the very popular screen-grid '24. The heater-type tubes are easily arranged in circuits which make effective use of by-pass condensers, and prevent inter-stage coupling troubles; while the attempt to obtain similar results with the '26-type is discouraging.

The use of a by-pass across the grid-bias resistor (as at B in Fig 6) may have some benefit, as stated above, in reducing hum without hurting the frequency-response appreciably. Yet the writer can show that, in a carefully designed amplifier which he possesses, the introduction of a by-pass across the resistor will actually spoil the excellence of its performance. The benefit of omitting the by-pass sometimes, is, that the resistor reduces greatly the effect of a resonance point in its circuit, without making much difference elsewhere.

General Rules

A by-pass condenser is used most effectively where its reactance is small, compared with the value of a resistor connected in series with or across it.

The effectiveness of the resistance-and-capacity filters, separating any two applied-voltage points in an amplifier, should be considered with respect to the amplification between these points.

By-pass condensers should have sufficient capacity to be effective at the *lowest frequencies* they are expected to by-pass.

For best tone quality and the elimination of serious regenerative effects, filtering between any two points should be about five times as effective as that necessary merely to obtain stable operation of an amplifier.

This last point is seldom observed; since amplifiers which are stable and use good parts are often supposed to be necessarily all right. But regeneration in electric sets often is the cause of rumbling and barrel-like tone quality; since the regeneration is particularly likely to cause over-amplification of bass notes. Effective elimination of regeneration in an amplifier, if good parts are used, is an essential step in getting the delicate shading and really natural tone that is most highly appreciated. If the reader has built an amplifier that is stable but not altogether satisfactory in tone, the addition of a little more filter, *or some improvement in the effectiveness of filters already used,* will often accomplish desired results.

Several other points are worth keeping in mind: That which the writer considers most important is that by-pass condensers should be capable of standing the highest D.C. voltages that may be applied. Remember that, in some cases, with A.C. tubes which warm up slowly, the voltage at first applied to the condensers when the tubes are cold will be considerably higher than when the tubes reach operating heat and are drawing normal plate (and perhaps screen-grid) current. A principal voltage-divider resistance, as shown in Fig. 2, may be eliminated if it is certain that all condensers (as well as other units) are safe at the high voltages that may be applied when the "B" eliminator is working without much load—as while tubes are warming up.

Separating R.F. Stages

It is a good plan to have very good filter separation of R.F. tube circuits from the detector and audio amplifier circuits; because radio-frequency tubes rectify (or detect) to some extent under strong signals, and such detected currents may be coupled into the detector or audio amplifier circuits. Likewise, strong audio signals, if they get back into the R.F. tube circuits, may cause some *modulation* of radio-frequency signals; and will thereby affect the detector. Such conditions result in poor selectivity and performance.

The present tendency, in the design of electric radio sets, is to use less audio amplification. It has been shown that detectors can be operated to put out sufficient power to operate a power tube without any intermediate stage of audio amplification. Under such conditions, more amplification is required in the R.F. stages to make up for the lower voltage-gain in the audio amplifier.

For equal over-all amplification and performance of a receiver, we have the choice of more amplification—with increased difficulty of stopping coupling and feed-back effects—either at radio frequencies, or at audio frequencies. An audio amplifier of moderate step-up does not present great difficulties, and may be preferable to the proposition of cutting the audio amplifier to a single step, while increasing the R.F. amplification and the power-handling capacity of the detector.

In either case, it is important to make effective use of by-pass condensers and resistors, and get adequate filter separation between the circuits of the several tubes.

Note: Where amplification is regenerative, the actual amplification may be called *A*, the normal amplification *a* and the feed-back *r*. Then. for unit input:

$$A = \frac{a-r}{1-r}$$

To limit *A* to 125% of *a*, since

$$125 = \frac{100-r}{1-r}$$

Then, $125-125r = 100-r$, or $124r=25$, and $r = 0.2$.
Therefore, the portion of output voltage that may be fed back is 0.2 divided by *a*.

Radio Service and the Electric Code

MOST electricians in the building trade, or in jobbing and maintenance work, hold the radio Service Man in low esteem. The reason for this viewpoint becomes apparent immediately comparison is made between the length and character of the training required by each, before the term "mechanic" is applied to him. Also the higher wages paid in the electrical industry have had an important effect in bringing this condition about.

Actually, the average Service Man knows more about electricity than does the journeyman electrician. In twelve years experience as master electricians, we doubt whether half of the electricians employed, can solve for resistances in parallel. Those who could, usually totaled up all the currents in all the resistors and divided this into the voltage. Possibly one mechanic in ten could explain why, in an Edison three-wire system, failure of a neutral fuse would gradually burn out all the bulbs on one side of the line and cause all the bulbs on the other side to grow dimmer and finally go out altogether.

Yet, we must rate the electrician as the better mechanic. In the final analysis, the radio set owner pays the Service Man, not for the contents of his head, but for the actual physical work done upon that radio by his hands, assuming that the Service Man knows his theory. Since most of this work is done with tools, the quality of the net result will depend upon how well trained in the use of tools, the Service Man's hands have been.

It is highly regrettable that radio has no training period comparable with the mechanic and helper stage in the electrical industry. While the radio man has to "dope out" the fundamentals for himself, the electrician helper starts work with an experienced mechanic who will usually pass on to the helper, all the work he can. To get this work done properly, he must explain the *how* and usually the *why*. Further, the helper, in the beginning, seldom has his own tools and works with the mechanic's, and the latter is pretty apt to insist upon these tools being properly handled.

The "Electric Code"

Lastly, the electrician does not depend upon his conscience to guide him. . His work must conform to the regulations of the National Electrical Code and municipal Electrical Codes.

Electrical work is subject to much stricter regulation than any other branch of the building trades simply because wherever it is used, electricity always carries with it the menace of fire. Since the financial losses of most fires are covered by insurance companies, bodies of persons qualified by training and experience to study the causes of past fires and form rules for the prevention of future fires, have been organized by these insurance companies and are known as Fire Underwriters. The Electrical Code is the result of the thousands of investigations and radio Service Men will do well to heed its regulations.

At this point, a few words of warning to employers of Service Men, are in order.

They are responsible for the actions of their agents. Action for damage to property while installing radio sets will be brought against them, not against the Service Man. If the cause of a fire can be traced to their installation, for which they cannot produce a written certificate of approval, action may be taken against them. Further, if there has been injury to persons or loss of life in the fire, this action will be on criminal charges. The laws covering electrical installations or repairs to electrical installations or appliances are, for legal wording, usually simple.

We quote from the New York City Municipal Code, Chapter Nine, Code of Ordinances:

"Article 1, Section 6. No person shall install, alter or repair, or cause to be installed, altered or repaired electric wiring or appliances for light, heat, or power in any building except a person holding a license, a special license, or a permit as defined in Section 1 of this chapter, or a person employed by and working under the supervision of the holder of a license, a special license, or a permit.

"Section 12. No person shall supply, cause to be supplied or used, electric current for light, heat or power to any wiring and appliances in any building until a certificate temporary or final, authorizing the use of said wiring or appliances, shall have been issued by the commissioner.

"Article 5, Section 501. (h) Wires shall not be fastened with staples. (i) Twin wires shall not be used, except in conduits. . . .
"Article 6, Section 611. (c). All splices and joints in conductors shall be made both mechanically and electrically secure without solder. The splices or joints shall then be soldered unless an approved form of splicing device is used, and shall be covered with insulation equal to that on the wire. (j). Where exposed to mechanical injury, wires shall be suitably protected."

Thus we see that radio installations in New York City must only be done by licensed electricians or their employees. In the exact meaning of the law, no radio set may be used without first being approved by the Commissioner of the Dep't of Water Supply, Gas and Electricity. Service Men, therefore, have no "divine right" to install or repair radio receivers in any manner they wish and, unless their "bosses" are licensed electricians, are continually violating local ordinances in the performance of their work.

How long this condition will last, depends entirely upon the character of the work that Service Men turn out and it is the writers' belief that the present grade of work is not good enough to maintain this state of affairs, and we believe that the time is drawing near when radio Service Men will be compelled to take out licenses to prove their ability, the same as electricians, plumbers, chauffeurs, motion picture operators, or members of any other trade where lives and properties of other persons may be endangered by carelessness or ignorance.

Inspection a Selling Point

Several large department stores and a number of other radio sales organizations have long ago taken steps to avoid any trouble for their customers from fire authorities. With each radio sale, an installation charge is made and certificates from both Underwriters and City Electric Bureau are turned over to the customer. In such cases, radio set owners can look at any inspector without fear, trembling and worry about possible violations.

Now, of course, will come the loud and dolorous cries of the men guilty of the flexible cords tacked to walls and spliced under canopies, "the others are connecting up radio sets the same way and we must meet competition. Customers won't pay for a decent installation."

That is not the truth. Armored cable does not cost much more than flexible cable. The trouble is these men do not know how to do the work without ruining entire ceilings or walls. They haven't the tools to fish BX, most of them do not even know how to cut BX, they do not know how to mix plaster and patch up the few holes that may be necessary to open in walls. They do not know whether plugging in a radio will overload a circuit or not, yet they will speak sagely of their high standing in the radio industry.

It is a peculiar fact that men of this type get higher prices for repair jobs than good men who really know what is wrong with a set. Subconsciously knowing that they may have to spend much time at the bench before actually finding what is wrong with a set, or that they may have to turn it over to some other man to fix, they have a standard diagnosis, "Burned out condenser block," and they show the set owner a list price of $16.93 or $14.87; some radio organizations prize high price getters like this.

A City Inspector Speaks

Mr. Whittaker of the New York City Bureau of Gas and Electricity and Mr. Cawley of the New York Board of Fire Underwriters take in the district bounded by Fifth Avenue and the East River in the Fifty- and Sixty-Numbered streets in New York City. Since 711 Fifth Avenue, Park Avenue, and the East Side are included in this district, these men are able to speak from experience on radio for extreme wealth and extreme poverty; and also on a real job as exemplified in 711 Fifth Avenue, the home of stations WEAF and WJZ.

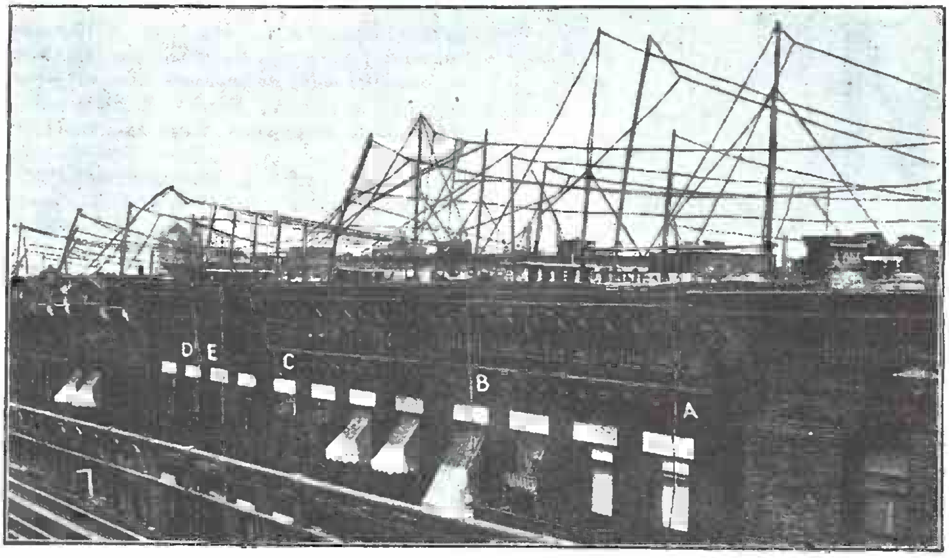

Fig. A

A typical sky-line of New York. Lead-ins A. B. C, and D run directly in front of the windows, not only marring the appearance of the buildings but actually causing a fire hazard where they run in front of fire escapes.

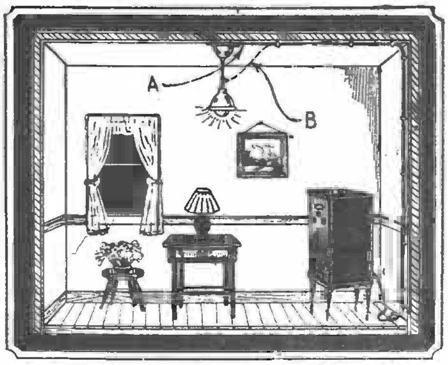

Power taps under canopies, A, or to drops, B, are not "code wiring."

Mr. Whittaker says, "To me, it seems that radio men do not realize the serious consequences that may result from a bad installation. Just as surely as the man who drives an auto without any brakes, or the man who pumps gasoline with a glowing cigarette in his mouth, the man who tacks silk cord along a base, up a wall, and under the canopy of a fixture, is courting trouble.

"Ignorance of the law cannot be recognized as an excuse for its violation. As this principle is not peculiar to the electrical code, but is recognized by all governing bodies, a radio Service Man cannot take refuge behind the excuse that he didn't know this or that was a violation.

"The most common condition that I find, seems to be that installation does not receive the attention it should at the time of sale of radios. If the buyer wishes to have the radio placed in a certain position in a particular room and there is no base or wall receptacle there, why is that the fault of the firm selling the radio? Yet that seems to be their viewpoint and they will send a man up to connect the radio in as cheap a manner as possible.

"If the buyer wishes the set in any particular location, I don't see why he or she shouldn't go to the expense involved in having the job done in an approved manner. If there are no receptacles, the radio or other appliance bought by the tenant has caused the condition of its being needed to arise. A little courage on the part of the salesman who would take the trouble of explaining this to a customer, would certainly make way for better installations.

"Receptacles wired from fixtures with flexible cord, motor generators placed in closed, unventilated closets, and usually with a lot of clothing and other combustible material thrown over them, splices made by merely hooking or twisting two wires together, without solder or without rubber tape, gas pipe used as a ground,—these are violations and must be 'written up' wherever found.

"It is false economy on the part of any radio dealer to permit his truck driver to do his radio installations. Some of the most slovenly jobs I have ever seen, have had more time and material cost, than it would take to pay an electrician to do the job *right.*"

Here we might add that Mr. Whittaker has the power to enforce his stipulations with the aid of the police and judicial departments of the City of New York. Readers will observe, however, that Mr. Whittaker is not denunciating or clamoring for the blood of the Service Man. He merely calls attention to things as he finds them and asks for a little clear thinking on the subject. Yet there is no doubt in the writers' minds that a few more fires caused by "haywire" radio installations and perhaps the life of a child or other person resulting, will cause some member of the legislative body of this city to introduce a law doing away with unlicensed electrical work.

Human nature being inclined to swing to extremes, it is possible that this bill will also do away with "junk-shop" radio sets, auction radio stores, the use of second-hand material of any kind, and other conditions that Cortlandt Street has called into being generally.

The Underwriters' Viewpoint

Mr. Corlies agrees with Mr. Whittaker and adds:

"The most casual inspection of the applications filled out by students enrolling for radio courses in the various schools show that few of these are from the electrical industry. Many are from classes of life where no tools of any kind have ever been used. How can we expect them to become expert mechanics after three months in night school?

"Radio courses are all right. The thing to bear in mind is that any course of schooling can, at best, only be a start in any career. Even a college graduate, after four

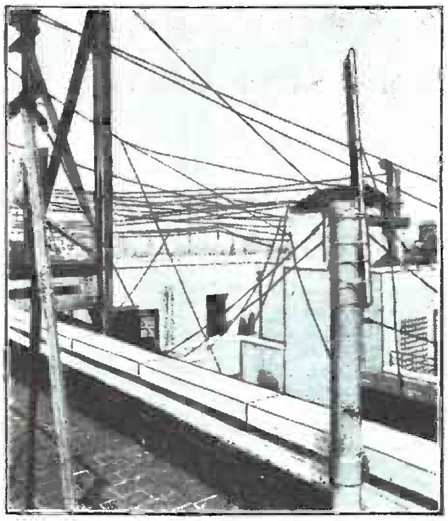

Fig. B
The pipe which caused a "shower of plaster."

years, must start at the bottom of his calling and learn to apply, in a practical manner, the knowledge he has gained in school. So should a radio man, finishing his course and embarking upon a field which is a branch of the electrical industry, learn the rules which the experiences of others before him have found necessary to follow.

"An electrician helper soon learns to respect amperes and the temperature of the electric arc. Shocks from voltage on the 110-volt lines, which seem to be the great danger he is facing in the popular imagination, really mean very little to him. In a very short time, he is placing his fingers across the line to test for presence of voltage, rather than dig the test lamp out of the bag. But amperes overloading wires burn his fingers, melt his screw driver to slag in a short circuit, singe the hair off of his hand when he closes a large switch with his hand; and send him home with a bandage over his eyes for two weeks when he sees the flash of a 100-ampere fuse blowing out, as he grounds a live service leg.

"Thus the presence of a potential Mrs. O'Leary's cow in every pair of wires connected to the street service is early recognized by him, and he will agree with the Underwriters in asking that all live wires be protected from mechanical or other injury.

"I wish to add a few words to Mr. Whittaker's statements about tacked cord about baseboards and up walls. Children at play, a dog nibbling, a cat sharpening her claws, a sharp-edged object falling across the wires, any other of dozens of causes may produce a flash that will ignite the insulation and start a fire. If this occurs while there is a person around with the wit to immediately extinguish the fire, little damage will perhaps be done, but if not, a four-alarm fire may develop. Most of this type of work is done in the older types of buildings and many of them are of tinder-box construction, just waiting for the spark to start a roaring furnace.

"Another practice is the use of 30-ampere fuses on branch circuits. Since these are wired with No. 14 wire which has an allowable carrying capacity of 15 amperes, a 30-ampere fuse does not constitute a proper overload protection; 15-ampere fuses blow because more than 15 amperes flow through them and placing a heavier fuse in the cut-out merely overloads the wires and transfers the possible point of burn-out to some other part of the circuit. Repairs at that point will always cost many times the price of a fuse.

"As a final word, I think that radio men are compelled to work too fast for good work. More time should be allotted to each job, and radio set buyers, figuring the entertainment they will receive from the set and the cost to them if they were to buy this entertainment at box office prices, should not begrudge the money for a decent job. If they were to demand and get certificates of approval on their radio installation as both the law and their insurance policy direct, the same as they get when they do any other wiring, both they and the radio Service Man will be the gainer. We do not quarrel with any man's right to make a living, but when this method of making a living involves possible danger to life and property of himself and others, civilized life demands that this man be subject to whatever rules are found necessary to minimize this danger."

Fire Departments also have much to say about radio Service Men, as have also apartment house superintendents, chief engineers in apartment hotels, master electricians like the writers who have also been in the radio business since its infancy, and a number of others whose lives or businesses are touched by the Service Man.

FURTHER study of the National Electrical Code in its relation to the radio Service Man reveals that the insurance authorities attach little importance to aerials. In Chapter 37 of the Code, under the title of "Radio Equipment," separation from power lines is requested, joints in the aerial span are required to be soldered unless an approved solderless splicing device is used, and work is to be done in a neat and workmanlike manner.

The third rule is rather general and leaves much to the aerial installer's conception of what constitutes a "neat and workmanlike manner." Free aerial-installation with radio-receiver purchases, complete installations for $2.00, and aerials installed by radio-set owners who have neither the mechanical ability nor the necessary tools to make a good installation have brought present conditions to the state where good work is the exception rather than the rule.

Legislation instigated by fire authorities, after firemen, or persons escaping from fires over roofs, have become entangled in or injured by trailing aerials and lead-in wires, or by property owners who have suffered property damage from these "hurry-up" installations, is pending before a number of law-making bodies and prohibits entirely or provides certain minimum requirements for aerials strung across roofs.

Fig. A shows a typical roof-line in New York City. Note the lead-in wires hanging in front of the windows at A,B,C, and D. At E, an effort was made to keep clear of the window. A clean lead job would be simply to fasten the wire to the wall outside the edge of the fire escape, with rawl plugs and knobs.

At first glance, there seems little connection between the manner of installing an aerial on a roof, and the plaster ceilings of the rooms in the apartments below. Or between a "hurry-up" job on any aerial, and a set bought on the instalment plan being returned to the dealer. Here is a case, however, in which the facts can be personally vouched for by the writers.

A Shower of Plaster

Four years ago, one of the writers was called in to locate a short circuit in an apartment house which was owned by a real estate firm for whom he did maintenance and contract electrical work. While upon a stepladder opening a fixture splice, he saw a crack suddenly develop in the ceiling plaster and spread across the room, the sections of plaster on either side of the crack sagging down toward the floor.

Not wishing to be struck on the head with a lump of plaster, he mounted the stepladder as high as possible and remained there, holding up with both hands the section of ceiling over himself, while pieces of plaster dropped from the ceiling to the floor. The crash of the falling plaster brought aid and the remaining plaster was removed in small sections.

The room in question was a bedroom. Had this plaster shower occurred at night with some person asleep, serious injuries might have resulted—possibly fatal.

A hurried examination of all the ceilings in the rooms below, showed most of these to be loose and it was found necessary to take these down and replaster. Oil paint, instead of kalsomine, having been used upon these ceilings, the water leaks causing this condition had not become noticeable.

On the roof immediately above, twelve aerials were found fastened to a vent pipe coming up through the roof. This had originally been braced with galvanized guy-wires, but these guy wires had been painstakingly cut by someone installing an aerial, to prevent contact with his lead-in wire.

The pull of these twelve wires against the pipe had caused the latter to shift, where it came through the roof, and a leak resulted, permitting the rain to enter and weaken the ceilings.

When it was found that similar conditions existed upon most of the roofs of their buildings, the owners ordered all outside aerials removed from all their build-

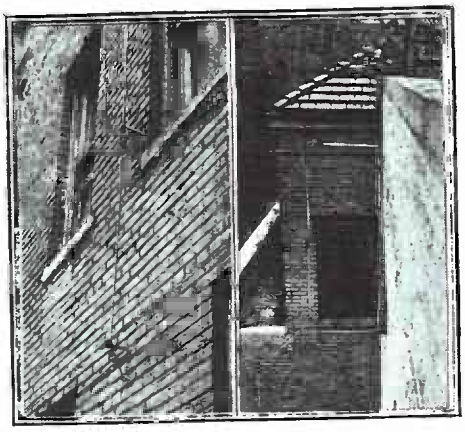

Fig. C. *A Multicoupler installation.*
Fig. D. *A neat cornice-wiring job.*

ings and no further installations of aerials permitted. This order affected over eleven thousand apartments and the writers have personal knowledge that many of these tenants, denied the use of outside aerials, became dissatisfied with indoor aerial reception and refused to pay the balance of the instalments due upon their sets.

For a period of three years, no aerials were permitted upon roofs by these owners. Tenants were denied access to roofs, except as fire exits and during daylight hours for the purpose of using the clothesline racks.

By doing away with the experimenting by tenants with aerials upon roofs, all persons seen upon the roofs after daytime hours were subject to arrest and police interrogation, resulting in greatly reducing the number of burglaries and petty-theft cases reported by tenants in these buildings. This had been an important detail in connection with their houses and, with plenty of tenants available for all their apartments, the owners made no exceptions to their aerial ban; tenants feeling that this ruling was oppressive, were compelled to move.

Enter the Depression

Conditions in the real-estate business have changed in the last two years, however, and the scarcity of apartments with plenty of takers gave way to a surplus of apartments with tenants demanding and receiving all sorts of improvements in apartments as a matter of course. Radio entertainment had also reached the level where it played a very important part in the life of the average person, and tenants were loath to accept the noisy background present with radio programs received upon an indoor aerial. Superintendents found it increasingly difficult to rent apartments, and the writers, called in as consulting engineers, suggested aerials be installed at the expense of the owners.

The Antenaplex system was used on some of the buildings while the Multicoupler system was used on others. Both gave very good reception and, the material used in both systems being approved by the National Electrical Code, certificates were obtained without any delay as soon as the jobs were finished. It is well to remember that the National Electrical Code covers all electrical merchandise, as well as the manner in which merchandise is to be used; insurance rates on buildings will be raised for violations reading "use of unapproved material," the same as when violations are reported for unapproved workmanship.

Fig. B shows an aerial installation similar to the one causing the plaster shower. Note that the vent pipe, being situated at the end of the roof, cannot very well be secured at the top with guy wires in all four directions and must depend upon its own rigidity to maintain an erect position. With the pipe and board attached to it acting as the lever, and the pull of the aerials acting as the applied force, the edge of the roof becomes a fulcrum of a lever of the first class, as the high-school physics teacher explained to us years ago.

Types of Aerial Systems

Apartment-house aerials consist of two types: one uses a vacuum-tube R.F. amplifier to amplify, without discrimination, all radio waves (within certain limits) impinging upon the aerial and capable of supplying enough signal energy for low-noise-level operation of 250 radios; the second type is a less-expensive arrangement supplying up to 30 apartments with each aerial and without using any vacuum tubes. The Antenaplex system is one of the foremost in installations of the first type while the Multicoupler is a leader in systems without tube amplifiers.

In the Antenaplex system, it was found best to install the untuned R.F. amplifier in the penthouses containing the heads of the stairways. The lead-in from the aerial is brought to this amplifier and associated apparatus, and from these, risers are dropped for each tier of apartments. In several houses, it was possible to use chimneys, no longer in use as such, for ducts in which to drop the risers, thus avoiding the necessity of strapping. In other cases, the lead-covered cable used for the riser, known as "Cabloy," was fished down partitions, strapped down dumb-waiter shafts, and sometimes, the speaking tubes in the older buildings proved ideal riser conduits.

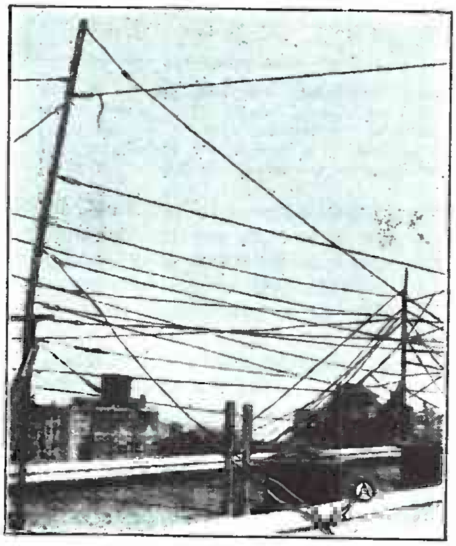

Fig. E

The poor work at A may account for the poor reception that is being received.

In the last-named case, it was usually necessary to open the floor in the apartment on the first floor above street level, owing to there being offsets in the speaking-tube lines due to the fact that the room arrangement on the ground floor differed from that of the upper floors, due to the existence of the main hallway.

With the Multicoupler system, nearly all installations were installed outside the building and the risers fastened to the brickwork. A mast shaped like an inverted "L" was used to support the aerial with the Multicoupler system, and the lead-in dropped vertically downward from the aerial span; this was made possible by turning the mast so the short section of the "L" pointed away from the building.

A typical Multicoupler lead-in is shown in Fig. C. No "human fly" type of mechanic is necessary as all fastening may be done from the windows. It also shows the latest type of Multicoupler unit, one of which is required for each apartment supplied from the aerial.

Fig. D shows how the lead-in is kept away from the edge of the roof coping. The aerial mast being shaped like a davit that holds life boats in place upon a steamship, the riser is thus so fastened that it cannot rub against the coping. Compare this with the lead-in at A, Fig. E, stretched over the edge of the coping and destined to cause plenty of crashes and "static" in the receiver it supplies with energy.

In all these aerial systems, much grief and quantities of bent nails may be avoided by fastening to masonry with the proper plugs. These are usually cylinders of wood, metal, and jute, designed to be placed in holes previously drilled for them in the masonry with a star drill and a hammer. If the plug fits the hole, that is, if the hole has not been made with too great a diameter, driving a screw into the plug will cause the plug to exert pressure against the circumference of the hole and resist pulling out. For aerials, the jute plug known as the rawl plug, does very nicely.

Costing slightly over one cent each and requiring a hole small enough to be drilled in the plaster between the bricks in from 10 to 30 seconds, a No. 10 rawl plug with a 1-in. No. 10 wood-screw will sustain a steady pull of one hundred pounds.

In hammering or using other tools while leaning out of windows, it is good practice to tie the hammer and drill to the wrists.

Like all good things, both the Antenaplex and the Multicoupler systems have been copied. Bootleg systems, with no provision to prevent coupling between receivers, and consisting of a roof aerial, lead-in, and plates for aerial and ground in the apartments, are to be found in many buildings—some new, where "radio engineers" have convinced architects and builders of the merit of their systems. When a plurality of receivers are connected to these, however, reception is terrible and outside individual aerials are demanded by tenants. The further harm done by these systems is that, any particular system being a failure, landlords become convinced that all apartment-house systems are a failure and permit the forest of masts and tangled spans and lead-ins to again deface roofs.

Radio Service Men will be better off by using and installing approved antenna installations than by asking landlords to pay for their experiments in installing their own conceptions of apartment house systems.

IN a recently issued report of the New York Board of Fire Underwriters, the following excerpt may be of interest to radio Service Men, home owners, or other unauthorized persons doing electrical wiring. "The records of proven electrical fires compiled by the Electrical Bureau of the New York Board of Fire Underwriters show that the losses for uninspected and unapproved electrical devices, materials and wiring constitute 81 percent of the total electrical losses."—J. C. Forsyth, Chief of the New York Underwriters Inspection Bureau.

Chicago reports 650 electrical fires during 1931. Of these, W. A. Jackson, City Commissioner of Gas and Electricity reports that 400 occurred in residences *and 80 percent of these were due to faulty wiring installed by home owners and other persons untrained in the methods of installing electric wires.*

Other figures compiled by insurance officials, electrical contractor associations, and power company inspectors throughout the country, with a few insignificant exceptions, show similar trends. In all summaries, the majority of electrical fires are shown to have occurred in homes where comparatively small amounts of power is consumed. The exceptions are several communities where electrical authorities do more than shake an admonitory finger at householders where violations are discovered or where a fire has caused enough loss of life to awaken a temporary public conscience.

When a comparison is made between the current used in the average single-family residence or apartment, and the large amounts of power used in factories, and the inverse ratio of electrical fires that seem to occur with these large amounts of power, the inevitable conclusion is that such fires are caused, not so much by the presence of heavy currents, *as by the manner of confining these currents to their conductors and the prevention of arcs near combustible material.*

This is well known in the electrical industry, and the National Electrical Code devotes as much attention to the insulation and protection of current-carrying conductors as to the conductors themselves. The false economy of using 250-watt sockets to operate 600-watt irons has been proven time and again. The Association of Electragists, International, in 1931, inaugurated a campaign to bring the attention of landlords and small-home owners to the lack of sufficient convenience outlets in homes. Figures from member electrical contractors have been provided, proving that the cost of replacing burned-out sockets, accidents happening while the light was off due to fuses blowing from overloaded materials giving way, and mechanic's time lost travelling to and fro on these small blowout jobs, average in three years, more than the cost of installing convenience outlets.

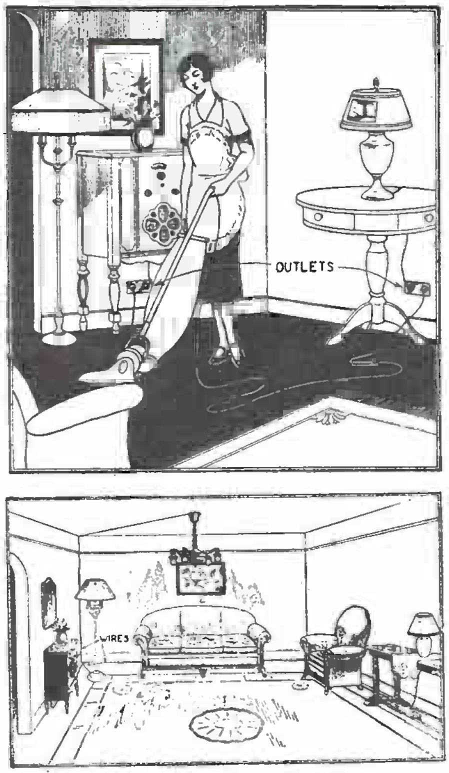

Radio installations may come and go but the good ones remain forever. This is well illustrated by the sketches above. The upper one shows how "the well-dressed installation will look," and the one below, how it will "not look."

Profits for the Service Man

The intelligent radio man should use these facts as a means of adding to his income. That nearly all this unapproved wiring takes the form of extensions from electric light fixtures is self evident for all power companies require that certificates from local insurance authorities and municipal electrical bureaus be registered with them before permitting current to be turned on.

When a Service Man is called in to install or repair a receiver and finds one of these scrap telephone or bell wire extensions, he can become a salesman of safety and explain the menace contained in this type of electrical installation. To a woman, what argument is more potent than that offered by the fact that 286 children, aged six and under, have perished in fires of proven electrical origin within a radius of twenty-five miles of Manhattan during 1931? *And 81 percent of these fires were due to uninspected and unapproved devices, materials, and wiring.*

Every radio Service Man has found that, after solving a baffling case of trouble (especially after others have failed or the owner has become involved in a hopeless mess after attempting to repair a receiver himself) radio set owners are apt to place confidence in every statement the Service Man makes. A time like this is an opportunity for the radio Service Man to bring out his array of facts regarding unapproved wiring and to sell the set owner the idea of electrical safety.

Even householders who do not care to go to the bother of having outlets installed at that particular time, may be so persuaded by the radio man's conversation that he will have such receptacles installed when the house or apartment is being painted. If contact is maintained with such a householder, as for example by means of free tube tests, this job should go to the Service Man or the electrical contractor he is associated with. In communities where licenses are required, or where Service Men have not been trained in methods of installing receptacles, radio men will save themselves plenty of grief if they contact electrical contractors and turn all possible jobs over to them, on a commission basis.

There is little reason why Service Men cannot utilize their continual contact with set owners to permit them to sell these latter electrical appliances, or any other merchandise they can obtain through regular wholesale channels. In a number of cases where radio service organizations are also electrical contractors, Service Men carry catalogues of standard electrical appliances with them in their cars and are able to quote prices and to give specifications of any particular type the set owner expresses an interest in.

The points in favor of replacing unapproved extensions with standard wiring, may be marshalled as follows:—

(1.) SAFETY. Where a householder knowingly permits an electrical menace to exist after his attention had been called to its dangers, responsibility for consequences must be his own. Loss of life or injury in fires, burns from short-circuit flashes, shock and possible heart failure from contact with live conductors, electrocution if such contact is made while the body is moist and is also making contact with a grounded object, are the possibilities arising from such systems. There is often found an attitude among householders who seem to feel that, while such results occur in other houses, they cannot occur to them. This resembles the state of mind of a man who has been used to dodging across streets laden with heavy traffic, secure in the feeling that a special providence is looking after him. After being bumped by a taxi or learning to drive himself, he finds that he had merely been lucky and had been depending upon the mechanical excellence of the automobile and the skill and attention of the driver for his safety.

(2.) LITTLE ACTUAL DIFFERENCE IN COST. Convenience outlets may be installed for slightly higher cost than the exposed lampcord, that is generally supplied. In new buildings, outlets are installed at an average cost of $1.50 each, while the walls and floors of a building have not yet been finished. The actual wholesale value of the material used to install an attachment receptacle is about $1.00, the items required being:

15 ft. 14/2 BX cable, @ .04 per ft.	$.60
1 Gem Box, @ .12 ea.	.12
1 Duplex Receptacle, @ .21 ea.	.21
1 Brass Plate, @ .07 ea.	.07
Total	$1.00

Contractors buying material in large quantities, can obtain prices as much as 25 per cent lower. If so, there remains $.75 for the labor. While this seems low enough, a journeyman electrician and helper, using labor saving devices and materials, can install as high as 35 to 40 outlets per day, which explains how an electrical contractor can still make a profit after paying $13.20 and $8.00 per day respectively to the electrician and helper. The prices to be quoted by Service Men must depend upon the type of household and the construction of the building. This will be taken up in a later section.

(3.) UNSIGHTLINESS. No matter how carefully lampcord is tacked across a ceiling, and down a wall, it will always show and be a collector of dust. Kalsomined ceilings cannot be washed without rekalsomining and, while wires along walls may be cleaned, it is not a safe proceedure to wash them with wet cloths. Since there is no substitute for soap and water to clean grime, the careful housewife leaves the wires decidedly alone. Approved installations are nearly always concealed in the plaster. Even when exposed, the conductors are enclosed in a fireproof or metal sheath and there is little danger of penetration to them without tools being used. Rats and mice do not seem to have developed a taste for cold rolled iron or zinc treated steel.

(4.) OVERLOADING FIXTURE CONDUCTORS. Most fixtures are wired with No. 18 Rubber Covered wire, known as fixture wire. This size wire has an allowable current-carrying capacity of 3 amperes. Most radios are placed in dining or living rooms and the fixtures in such rooms usually have 3 to 5 sockets. Fixtures so wired with No. 18 wire, while baving current carrying capacity enough for lamps, are not designed to further supply the 125 to 175 watts required for an electric radio. The danger in overloading conductors is not immediately apparent. The rubber covering of the wire gradually loses its elasticity due to the heat from larger currents than it was designed to pass and it becomes brittle and drops off from the wire, then the bare conductors ground against the fixture and the householder assures the trouble shooter that, for no reason at all, the fixtures suddenly spat flame and the lights went out. Inspectors testing wiring materials always dig into the insulation with a finger nail to determine the life in rubber covered wire.

(5.) LOWER INSURANCE RATES. All insurance organizations are merely pools wherein the supposedly unlucky few who have suffered reverses, are compensated for their losses by the fortunate many. Thus one fire loss is paid for out of the premiums paid by many who have not had fire losses. If many fires occur, more money must be paid in by those who have not had any fires, meaning higher insurance rates. If each householder did his bit to prevent fires, all fire insurance rates on this type of insurance would go down. Another thing to bear in mind is that insurance companies do not have inexhaustible pots of gold to ladle out to their policy holders, as seems to be the popular conception. All damages collected by a householder from the insurance company for loss caused by a fire or otherwise must come from the pockets of his friends and neighbors since the rates for the same risks for the same types of residences differ in various localities, due entirely to the poor risk and the frequency with which fires occur. Insurance rates are the force most electrical authorities use to compel removal of violations when peaceful requests have failed. By reclassifying a risk, as anything insured is known, into a grade where more losses occur, rates are doubled and tripled. For example, a building insured for $100.000. and paying a rate of 1½ per cent or $1,500., will have it's rate doubled—3 percent or even 4½ percent rates are sometimes charged. Thus the cost of insurance is raised from $1,500. to $3,000. a year at 3 percent or $4,500. at 4½ percent. The difference between these sums would pay for a lot of electrical wiring.

Doubtless, radio Service Men who will give the subject some study, can find many other reasons to advance against the natural objection of the householder to any change, absolutely not vital to the playing of his radio. Figures on reinspection are available and electrical contractors throughout the country are seeking legislation to provide enough inspectors so that every electrical installation may be inspected and reported upon every two years. The most common defense of unapproved wiring: "Everybody's doing it." does not seem to impress insurance authorities or magistrates as an adequate explanation of why the law is being violated.

Servicing—As Others See It

A viewpoint of radio retailing methods which is entirely too typical

"IS this a system?" inquires a writer in *The Composing Room,* organ of a group of trade compositors (whom the general public would group under the generic name of "printers"), and he adds the following outside view of the radio business (retail):

"Recently we went through the experience of shopping for a radio. We didn't get one, thank God, but we did get a lot of information. We had thought that a radio was a device for collecting sounds out of the air and reproducing them in the home. In this we were mistaken. A radio, we now know, it an empty wooden box with a knob on it. The several hundred assorted gimmicks necessary to make the instrument do anything, are all extras.

"This business policy, if anyone could call it that, of radio distributors, strikes us as a pretty coy system. It could be applied to other lines of business and it occurs to us that the result would be no end amusing.

"If we had a radio salesman at the head of a typographic house, we would be somewhat startled, no doubt, by the way he would conduct the business. "Type at Five Cents a Thousand Ems," is about the way the advertising would run, and after several thousand printing buyers had been killed in the rush, the survivors would wake up with bills in their hands which would make them wish they, too, had died.

"To be sure, the job would be billed at five cents a thousand ems, but there would be a few little incidentals, not mentioned, of course, until after the contract had been signed. There would be an extra charge for composition; a charge for leads and slugs and for the spaces between words; a charge for metal; a charge for the compositor's time; a charge for the soap with which he washed his hands after the job was set; a charge for laundering his towel and apron; a charge for wear and tear on his shoe leather and an assessment for his old-age pension; a charge for ink, paper and time required for pulling proofs; a charge for depreciation on the proof press; a charge for string and paper used in tying the job up; a time charge for tying and weighing and an additional per cent. for upkeep for the scales; a charge for elevator service; a charge for delivery, including gasoline and oil and the truck driver's time; a charge for return of delivery truck; a charge for sweeping the office and, no doubt, a few other small charges, just for good measure.

"By the time the buyer got it in condition so that he could make any use of it, his thousand ems would cost him, according to the radio system, $94.67, provided he returned the metal at his own expense."

The rather interesting point, that is most obvious here, is that the expenses listed are part of the cost of producing the composed type; after all these have been incurred, the type is useless until it has been put on a press and ink and paper applied to it. In other words, the finished "composition" is like the radio before the latter is supplied with tubes and hooked up.

But this highly technical, if important, point is aside from the fact that the innumerable expenses of doing business must go into the cost of selling every radio; and that every radio dealer must take them into consideration. So also, all the costs of keeping a radio in operation must be paid by someone. The more difficult that service is made by the manufacturer, the more the public must pay for it. The more difficulties that are thrown in the way of the Service Man, the higher the cost of owning a radio. Rightly, or wrongfully, the public has the idea that the upkeep is too high.

It is an expensive frame of mind for the radio industry. A little more education of the public on radio servicing is in order; and it is most economically to be obtained by a somewhat more cordial *entente* between radio manufacturers and Service Men than that which exists today.

EXTENDING THE SPEAKER

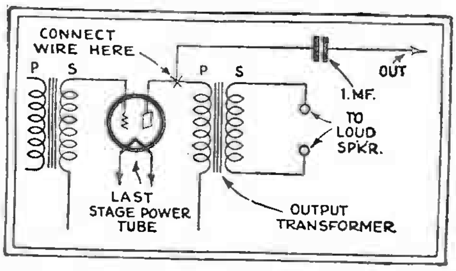

AT the height of a birthday party, the radio set suddenly went "dead"; a filter condenser had shorted. As the radio service stores were closed for the evening, it looked as if the party would spend the rest of the night in silence.

But, in a half hour, radio reception was restored in the following novel manner:

After a length of wire had been connected (through a 1-mf. condenser) to the plate of the last audio tube, in the next-door neighbor's radio, the wire was run to the home where the party was in progress. The magnetic speaker was then connected on one side to the wire, and on the other to the ground or chassis of the radio. As both receivers were grounded, the circuit was completed; and excellent reception was obtained for the rest of the evening. The wire used was only No. 24 C.C. magnet wire, and heavier wire would have improved the reception. This method of extending the output of a radio to another home has many uses, and many ideas can be developed from it. (The idea has occurred to other correspondents; but many readers may profit by it.—*Editor.*)

CHAPTER II

Making Money in Radio Servicing

No Business is Successful Unless Run in a Systematic Manner. The Business Methods Employed by Successful Service Men are Here Outlined.

Extra Money For Service Men

THERE are some Service Men—and their number is increasing rapidly—who seem to feel that there is very little money left in the radio servicing game.

Nothing could be more erroneous; and it may be safely said that the Service Men who voice these sentiments are not only still in the minority, but certainly, they do not use up-to-date and aggressive service methods mixed with a goodly amount of gray matter.

Radio dollars do not tend to grow on trees. You have to go and look for them, exactly as for any other kind of dollars. When times are difficult, like the present, and people do not spend as freely as of yore, a certain amount of ingenuity is needed in order to get extra sales. For that reason, the up-to-date Service Man these days does not content himself with just servicing sets, which is his trade. Of course, if there are enough sets to be serviced, it is certain that the Service Man will find no cause for complaint. If, on the other hand, he has a limited clientele, whose sets do not happen to require servicing, there is still a good deal of money to be made from extra efforts which have nothing to do with servicing itself, strictly speaking.

When things are dull, the radio Service Man can easily become a radio salesman and supply his customers with all sorts of radio merchandise; and, if you once have an entree to the customer, it is usually an asy matter to "sell" your prospect.

Most of the sets made prior to 1931 contained no Pentodes. It should not be difficult to convince a set owner of the better quality, greater volume, etc., that can be had through the use of the new Pentodes. It is no trick at all, with most sets, to change them over from the old-type tubes to Pentodes at a decent profit to the Service Man. Most set owners, these days, cannot afford to get new sets; but they welcome having their sets brought up to date, if it can be done.

There is a new tuning indicator, the "Tune-A-Lite," also known under the trade name of "Flashograph." This new tuning device is an elongated neon tube, which is already built into several 1932 sets. The main idea is that the neon bulb flashes to the highest point when the set is in resonance with a certain station. This is a brand new device that is sure to interest the average set owner. During the next few months, it will be possible to buy a complete Tune-A-Lite section that can be attached to the outside of the radio set, and it will also be possible, with a little cabinet work, to fit one into a present-day set. A demonstration of such a light is sure to make a sale.

I have spoken before of short-wave adapters. Now-a-days, people wish to tune in foreign countries direct, and get the thrill of hearing the European and other world broadcasts that fill the air. A large amount of such adapters are already to be had, listing from low prices up to the more expensive models. If the Service Man carries one of these adapters with him, and shows the owner how comparatively simple it is to tune in a foreign program, the sale can easily be made.

Electric (A.C.) clocks are becoming the rage all over the country. They are not only cheap, but they keep time most accurately. The consumption of current is almost nil. An ideal position for such a clock is on top of a radio set; and many Service Men are making slight structural changes in existing cabinets, to fit electric clocks into the standard receivers. A sample of the clock, carried around and demonstrated, will frequently result in a sale.

Then, of course, tone controls, of which many can be had, and at reasonable prices, are still good sellers. They take but a few minutes to install; and a simple demonstration to your prospect nearly always results in a sale. There seems to be a certain reluctance, in most people, when it comes to listening to lectures and talks over the radio. In most sets not equipped with tone controls, the talk is usually sharp and "brilliant." This the tone control can "mellow down," and thus make the talk far more agreeable to the individual taste. One Service Man reports that four out of five demonstrations result in sales.

The itch for distance seems to be on the increase, even on the long-wave broadcast set. For a time, most people wished only to get local programs; now it seems they are hunting for distant stations again, if the many letters that we receive are a true indication of this. As a rule, successful "DX" (long-distance) reception pre-supposes a good aerial. A large proportion of present aerials were installed in a hurry, and are not good in the electrical sense. Set owners who use indoor aerials, and light-socket connector aerials, should be sold on the idea that their set will give them far greater volume if a good hundred-foot outdoor aerial—providing there is sufficient room—is installed.

Then, there is, of course, a tremendous market for line-noise filters. Radio set owners who live in apartment houses, if they have a sensitive set, know that they will get a click every time a light is switched on in the house. Then there are disturbances from refrigerators, vacuum cleaners and a host of other appliances. There are now on the market a number of efficient noise filters, and an up-to-date Service Man should always carry a few with him. Once the prospect understands what it is all about, he will not hesitate to spend a few dollars if he knows that his reception will be relieved of a great deal of man-made static.

I have only sketched a few of the more obvious ways in which the Service Man can pick up dollars right and left, if he only goes after them. There are, of course, many other methods which he will find if he uses his head.

The Business End of Radio Servicing

A Service Man who has gone into business for himself tells how he gets business, handles it, and—note this—collects for it

THE purpose of this article is not to tell how to fix radio sets, but to discuss the Service Man's relations to his customers, and how he can make the most of them. Experience has shown that service work is ten per cent. technical radio and ninety per cent. salesmanship.

The writer has met Service Men of all kinds and types; some are successful, some are not. A peculiarity he has noted is that the successful ones usually know the least about technical radio; while those who are more technically inclined do not seem to get fair prices for their work. The reason may be that the over-technical radio man is so engrossed with radio itself that he forgets he is in the servicing business primarily to make money.

Consider Your Investment

In passing, attention may be called to the fact that radio is a costly profession to learn. Perhaps it has not involved any actual expenditure for tuition itself; but remember that, as a business man, you should reckon in your investment, not only such items as textbooks, radio magazines and testing equipment which you have purchased, but the hours of time you have spent experimenting and finding out at your own expense the fundamental laws of electricity and radio itself. Remember too, the number of sets you have built at your own expense and torn apart and rebuilt countless times.

The story is the same, no matter what radio Service Man you ask; all seem to have learned the business in the same way. Take the number of hours you have spent in experimenting and multiply it by the average pay-rate of any so-called job. You will be amazed to find out just how much it did cost you to learn the radio business. Remember, too, that your days of experimenting are not through; you can never stop, if you wish to keep up with this rapidly-changing industry.

If you had invested several thousand dollars in any other business, you would be perfectly justified in expecting a reasonable return on your investment; so with radio. Make it give you a reasonable return for the time and money spent in learning the business.

Many radio men, engaged in private service work, either for themselves or for dealers on a contract basis, take their business too lightly; they seem to look upon it as "just a job." It is more than that; it is a profession, and can be made to pay professional compensation. Aside from the obvious need of being constantly posted as to new developments in the radio industry, and keeping up with the newer type of commercial radio ceivers, the radio Service Man must follow the plans being used by sales organizations.

Go After Business

Promotion work can be successfully applied to radio service work and will give handsome returns. Your prospects are the people who bought battery sets years ago, and who are constantly patching them up to keep them going, those who bought the earlier electric sets, and those who have had their newer machines long enough to have passed the guarantee period. A large percentage of set owners have purchased their radio receivers from a dealer but will, through some misunderstanding (usually over credits, etc.), make a practice of having them repaired by some outside man. You may as well be the man to do this work for them.

Right now, in your own town, some one is wondering whom to call for radio service. Make it your business to reach these people. True, not every one you come in contact with needs service right now; but you know that tubes, condensers, resistors and transformers, etc., have a definite life. Set owners will need service sometime. Make them acquainted with your business; not after they have had service done elsewhere, but before, in time for you to get the job. Get to these people first, tell them your story, leave your name with them—then when they do need service they will think of you. Your business will be in direct proportion to the number of contacts you have previously made.

A good plan to follow is a combination of telephone canvassing and direct-mail advertising. You can call at least twenty-five people a day and offer them a free radio inspection. Your method of approach may be somewhat like this:

"Hello, Mr. Brown, this is Mr. Jones, the radio man. I have just started in the radio service business and, in order to become acquainted with the people in town I am offering a free radio inspection. I will be glad to come to your home and inspect your radio, test the tubes, and check the antenna and ground installation. How long have you had your radio, Mr. Brown?

"You say your machine is a year and a half old? By the way, Mr. Brown, have you had the tubes tested lately? You know that sometimes you can get better reception if you rearrange the tubes in your set. I will be glad to stop up and test the tubes for you and try to get you the best reception possible. I am doing this just as a sample of my work; so that when you do need service you will know where to call."

If he agrees to allow you to inspect his set, make an appointment and KEEP it.

If not, continue, and say:

"Well, Mr. Brown, I am glad to hear that your radio is working satisfactorily and, so that you will know where to call, I am going to mail you my telephone number and address." Experience has shown that twenty-five telephone calls will net, on an average, eight inspections; and, of these eight customers there should be no difficulty in selling four of them at least some tubes or other accessories.

Keep After It

Don't be afraid to do a little extra work. It won't be necessary after your business has come to the point where you have enough daily calls to keep you busy. But, until then, keep right at your promotional work. You can't make money sitting around the shop looking at the four walls, but you can build for the future if you keep constantly plugging at your promotional work.

The next day after your phone conversation, mail your prospect a card or letter telling him your story all over, giving your telephone number. Follow this up with a second letter, impressing him with the desirability of having his radio checked before it really gives trouble. Sell him the idea of having his set put in good shape before trouble really develops and denies him his radio for a few days. Stress the idea that "An ounce of prevention is worth a pound of cure."

While these letters will not give immediate results, they are doing their bit to sell your customer the idea of calling you the next time he needs service. After the second letter, two weeks later, mail your customer

EMERY HOME APPLIANCE, INC.
192 Merrick Road Rockville Centre, L. I.
"RADIO SERVICE" SPECIALISTS
Phone R. V. C. 701

Name .... Phone ....
Address .... Date ....
.... Time ....
Parts
Kind of Set .... Tubes ....
Present Trouble .... Material ....
.... Labor ....
Service Man .... Tot. ....

This set now operates to my entire satisfaction

Signature ....

A card useful to the Service Man, among other purposes, to lead up to collecting for the job.

MRS. MARY SMITH,
Baldwin Place,
Oceanside, L. I.

Dear Mrs. Smith:

A Stradivarius violin worth twenty thousand dollars is musically valueless without a little ten-cent chunk of rosin to rub on the strings. A Rolls-Royce costing sixteen thousand dollars won't budge an inch without six little spark plugs costing seventy-five cents a piece.

So you see, when you stop to think about it, the little things are tremendously important. Which brings us to our subject: Is your Radio working satisfactorily—or is it just working? Why be satisfied with anything short of perfect Radio reception when it is so easy to get the best out of your Radio?

Just call Rockville Centre 701. One of our highly skilled Radio experts will call at your home and inspect your Radio, test the tubes, check the installation, all FREE OF CHARGE. Why not take advantage of this offer? You owe it to yourself and your family to see that your Radio is giving the satisfaction it is designed to give. Why let some minor accessory cheat you out of this real Radio enjoyment? Don't delay. Take advantage of this offer. We await your call.

Yours for Radio enjoyment,
GRAHAM BROS.

Another brief, pithy service sales letter.

a post card, giving him a reminder that you are still waiting to serve him. Continue this card system at least once a month. Call the people on the phone regularly until they get to know you. Remember, too, that before you entered the business they were having their radio taken care of by someone else, it is your job to sell them the idea of calling you.

Do not make it a practice to use price as he bait, use reliability and promptness as your main selling points. Ask your old customers for the names of their friends and follow these names up in the same manner except that you can mention the friends' name and in that way make the conversation more personal.

Your follow-up letters and cards can be cheaply mimeographed and, if you send out twenty-five pieces of mail a day, you will be able to keep at it. This system is much better than mailing a broadside of, say, a thousand pieces of mail once, and then forgetting about it. Make this follow-up system a religion.

After you have serviced a set for one of your customers send them a thank-you letter, emphasizing the fact that you are interested in their well-being from a Radio standpoint. Make them feel that you are interested in *them,* not only in their money. Make your contacts serve you by showing the people that you are conscientious.

How to Sell New Tubes

A very good method that has been used with considerable success in following up these free inspection calls—and regular service calls for that matter—is to have your service kit, tools, etc., in a suitcase large enough to hold the test kit, tools and at least a set of tubes for the particular type of receiver you are servicing at the time. When you are in the customer's home, ask them how long they have had the machine, what previous trouble they have had, etc.; this will give you a general idea of just what may be wrong.

The first thing to do is to examine the machine in its present condition. Proceed to take the customer's tubes out of the set, and place them to one side; then insert the full new set of tubes, explaining to your customer that you always check the set with your own tubes; as this saves time and trouble in case a tube should burn out during the testing. After you have tested the machine and rectified any difficulties that may have been present, take your tube tester and test the customer's tubes, carefully noting any that may be weak.

Now, with your own tubes in the set, tune in one of the weaker stations; and then remove your tubes, one by one, replacing them with the customer's tubes. If he has any weak tubes, he will immediately see that there is a difference in results with good tubes in the set; and the task of selling him new tubes will be much lighter. Remember that the manufacturer designed the set to work with perfect tubes and it is your duty to see that the set has just that; your customer will thank you after he sees the difference in results. As ninety per cent. of the radio public have been sold on the idea that tubes are the most important part of a radio, you can capitalize the idea and make it pay you handsome dividends.

The practice of having the tubes with you will save you many a sale; because sometimes, while you are running back to the store, the customer gets a chance to change his mind, and may decide to run the set just as it is. Get the job done as quickly as possible and cash in on the interest the customer has in his set at the moment. Later on, something else will captivate his attention; remember the old adage of chain and department stores—"They never come back." Very few of the customers, who say they will call you when they can afford the tubes, will call you back. But, if you are tactful and persistent, you can sell them the tubes while you are right on the job.

Dear Mr. Jones:

Is your radio working satisfactorily—or is it just working—?

Perhaps you have been using your radio for the past six months or so without having it checked. It may be that just a tube or some minor accessory is standing between you and complete radio enjoyment.

No matter what radio receiving set you own—no matter if it is be electrically or battery operated—no matter if it be old or new, your receiver does require attention. Perhaps we can be of service to you; and we will appreciate your consideration.

"Those Serve Best who serve with sufficient knowledge and sincerity of purpose." We are radio service specialists with sufficient knowledge and sincerity of purpose to insure you of complete radio satisfaction. We deal in radio facts instead of radio promises and hopes. We are capable radio engineers and our radio knowledge is at your disposal.

Let us look out for your radio interests. Call Rockville Center 701. Our inspection and advice cost you nothing. Why not call now and have your radio set inspected before trouble develops?

At your service,
GRAHAM BROS.

An introductory letter

Dear Radio Owner:

We are reminded of a story told about the late P. T. Barnum, the famous circus magnate and practical joker. It seems that, while he was giving one of his shows in the rural sections of the country, Mr. Barnum decided to add a "FREE" attraction to his already famous circus. This attraction was a highly decorated doorway marked, "FREE EXIT." When our country friend entered the doorway and passed through, he found himself outside the grounds and was faced with the necessity of paying another admission to re-enter the grounds to see the show.

FREE RADIO SERVICE is usually worth just what is asked for it—nothing. Many of the residents of this and other suburban localities purchase their Radios from large chain stores located in nearby cities. These large Radio outlets advertise FREE SERVICE.

Out of fairness to the large stores, we must remember that the largest portion of their customers are located in the big cities near to the stores. To these customers the big stores do give prompt, efficient service; but what happens to the service calls from the suburban towns?

Put yourself in the place of one of these big stores. Close at hand you have 90 per cent. of your service work; the other 10 per cent. is spread throughout a circle a hundred miles in diameter. To do one service call in the suburbs takes as much time as to do ten calls nearby. What is the natural consequence of this condition? The suburbanite has to wait until the service department has enough calls out his way to warrant sending a man to his locality.

To YOU, a suburbanite, this means waiting days—sometimes weeks, for service, and the most expensive Radio is useless unless it is giving entertainment—that's what you bought it for. It is not necessary to wait for service.

Yours for complete Radio enjoyment,
GRAHAM BROS.

A sales letter urging the value of prompt service when it is wanted.

Mistakes to Avoid

Of course, it goes without saying that you will only ruin your business if you attempt to force tubes and accessories on people who do not actually need them. But, if a man has weak tubes in his machine and is cheating himself out of real radio enjoyment, it is your duty to him to show him and convince him that his radio can be greatly improved. This idea does not involve tubes alone, but covers any other item that the customer may need to make his reception perfect. Some owners do not know just what their receivers can do; they will go along with only half-way results. Show these people just what the possibilities are, and you will make a success of the business. Their friends will notice the difference, and this will bring you much greater returns in new business.

In servicing receivers that have some major defect, such as a burnt-out transformer, it is good general practice never to spend more than thirty minutes' time on the machine in the customer's home. They have an idea that you must find the trouble immediately. The average customer dislikes very much to have his radio torn apart in front of him. Take the set to the shop where you can work in peace, and do a much better job.

A hard and fast rule, never to be broken, is: *never, under any circumstances, take the customer's tubes* with you when you take a machine to the shop for repairs. This will save you many an unpleasant scene when you have found that there are defective tubes in addition to the trouble you have just repaired. If the customer's tubes have not left his home, there can be no question as to whether or not they are his tubes. After you return a set from the shop you can proceed as outlined above, and often make an additional tube sale.

Collect Promptly

After the job has been completed, a good practice to lead up to the question of the price and payment for the job, is to have service report cards printed and ask the customer to sign the report. On this report you can fill in the amount of labor, tubes and accessories. (A sample card is reproduced herewith.) You can then turn to your customer and say: "Mr. Brown, that will be so much."

When doing work for people you do not know, avoid, if possible, opening charge accounts; for radio service is one of the hardest things to collect for. There is always the possibility of the set's going bad a few days after it has been repaired, for no reason of your own fault. It is just one of those things that will happen to a radio set. Your customer, however, will invariably expect you to repair it again and will usually only pay the previous charge. In this way you have to do two jobs for the price of one.

You can keep your charge accounts at a minimum if you carry blank checks on all the local banks; this will avoid those excuses that they would like to pay you but have no check blanks. Also carry enough change for at least ten dollars; this will avert the possibility of your customer saying: "Can you change ten dollars?" If you can't, you have hardly any alternative but to say, "You can just mail me your check, Mr. Brown." Those checks are usually a long time in arriving at their destination.

A good way to get around the cases where they haven't enough money in the house at the time is to say: "Oh! That's all right, Mr. Brown; but I have a call on the next street tomorrow. I'll drop in then and you can give it to me." That will usually solve this problem.

Remember that if customers owe you money, they hesitate to call you; especially if they are of the type who habitually open temporary charge accounts and conveniently forget about them. In this way you usually lose the repeat business that should be yours. Sooner than pay your old bill, they will call another man to have the set fixed, and pay him, leaving you to wait. Remember, it takes just as long to call to see a customer to collect a bill as it does to make a service call, and it is not nearly as pleasant nor as profitable. Two or three calls on a collection and you have lost all you made on it and, usually, the customer besides.

Dear Patron:

We wish to thank you for having given us an opportunity to be of service to you. We realize that a successful business can only be built on good will. Our interest in your Radio does not cease with the mere collection of the service charges. It is our earnest desire to have each machine serviced by us, act as an advertisement of our business. Now that your Radio has been placed in good working order, it will be to your advantage to keep it in this condition. You can easily and inexpensively do this by taking advantage of our monthly inspection.

This inspection service consists of a thorough checking of your Radio and all the accessories once a month. This procedure greatly reduces the repair bills that are inevitable when a Radio is neglected. The total yearly cost of this inspection service is less than it would cost to replace one part in your Radio. It has been our experience that most people do not give any attention to their Radio until it has actually stopped working. Many times during the course of our regular inspection we can detect trouble and prevent it from doing serious damage to your machine. If it were only for the sake of having your Radio always in operation when needed, it would be worth the price asked for this inspection.

May we offer you this service at the amazingly low price of $1.50 per call? This will include checking the tubes and reactivating any that may be weak, checking the aerial installation, speaker, power unit, or other accessories, testing the speaker for tone, and making any minor adjustments that may be necessary. If you wish to take advantage of this offer, return the enclosed card and we will enter your name on our inspection list.

May we again thank you for your patronage and solicit your continued good will, and that of your friends?

Yours for Radio Satisfaction,
GRAHAM BROS.

A "bread-and-butter" letter sent after making a first call.

Don't get the impression that charge accounts are never to be desired. A good charge-account customer is better than a cash customer; for he will continually patronize you and, usually, make larger purchases. But limit your charge customers to those you actually know.

This, of course, applies to the larger towns. In small communities the Service Man, if he is a native, knows his people, and can use his own discretion. But remember that you can't eat, or pay your bills, with accounts that are on the books. Learn from your friend the garage man who usually displays a large sign: "ALL REPAIRS CASH."

Honesty Will Pay

Do not make a habit of "trick" repairs, such as shorting resistors, disconnecting burnt-out condensers, "shooting" transformers, or any other form of temporary repairs. If you must do this in an emergency, by all means tell the customer about it, so that you can return later and complete the job in a proper manner. Remember that you can lose much if you adopt these methods of working. Your customer is paying you for honest-to-goodness work; see that he gets it. It is very easy for a customer to call another radio man to check up on you; and you can lose much prestige by these trick repair methods.

Many repair men give a three months' guarantee with a radio set after they have made some major repairs; such as replacements of transformers, condenser banks, etc. You will find it profitable to offer this guarantee to all your customers. You will seldom be called upon to fulfil the guarantee but, if you are called upon, be sure to live up to your word. Remember that one displeased customer can pass the word on to hundreds of people. "Bad news travels fast."

In recapitulation: give good work; charge fair prices; be constantly on your toes for new business; don't hesitate to sell your customer what he needs. Be prompt and courteous and, by all means, keep your word. You can't fail, there is business, go and get it.

From Service Man to Radio Engineer

BEFORE entering the radio field, a young man should ask himself these questions: Have I a keen ear, a quick eye, and some skill at manipulation? Do I quickly grasp scientific facts about machinery and electrical devices? Am I willing to study nights? Am I prepared to spend several years working my way up from the bottom in a radio factory, a broadcast station, or a transoceanic or a marine station? And will I be at home in an engineering profession?

If he can answer all of these questions sincerely and positively in the affirmative, he may consider radio as a profession.

There are two ways to get into the radio field One of them is to study electrical engineering, and finally concentrating on radio engineering. He can then enter a radio company in an assistant engineering capacity and work his way up.

The other method largely involves *self-tuition.*

It is a harder way and a longer way, and requires real grit and unusual aptitude. The prospective radio engineer must study at home the best available books on elementary and advanced physics, algebra, some trigonometry, some good books on direct- and alternating-current machinery, and a succession of radio engineering text books, starting with the more elementary and ending up with the most advanced books which he can find. At the same time, or shortly thereafter, he will do well first to assemble a number of radio sets himself at his home, and then to get a job in the assembly of radio sets, or in the testing or servicing of sets with a reliable and up-to-date radio concern. By sticking to this job, and keeping his eyes and ears open, there is no reason why he should not within a few years secure a fairly responsible position as an engineer in the radio field.

He should also keep in touch with other engineers and attend meetings of engineering societies, at the same time reading the best journals which he can secure. It is only in this way that he can keep up-to-date in the radio art.

Radio engineering is a splendid profession for a moderate number of ambitious young Americans, but it has no place for the man who is waiting for life to hand him its rewards on a gold platter. He will have to learn his job and stick to it.

Why Service Men Should Sell

Many Service Men are Not Aware of the Vast Opportunities In Store For Them. The Following Article Shows How A Large Dealer Business May Be Built Up From A Small Service Shop.

It has been the writer's experience that the Service Man in small towns does not make nearly as much money out of radio as he could.

About a year ago I decided to go into the radio service game; as I had been called upon by a lot of people to fix up their sets (and most usually without pay) and had discovered that, of the three dealers who sold radios in this town, not one of them had even read a radio magazine of any kind. They could not tell the difference between a radio-frequency transformer and an audio transformer.

I made out a list of all the radio set owners that I knew, and mailed to each one of them a letter stating that I was now servicing radios, and requesting their business. A short time after this, I discovered that many of the owners of the sets I serviced did not like to buy supplies from the local dealers; suspecting that they used a lot of accessories and then sold them for new. So I put in a full line of tubes and accessories, and then went back to my mailing list, which had grown until every man that had a radio in town was listed. I made up a sales letter, telling about my now selling tubes and accessories, and mailed one out to each owner.

The sales were very good and quite a good profit was realized on these alone. Last June the writer heard one of the radio dealers make the remark that he "sold the sets and let Rockhill fix them"; so he himself made the money. This set me to thinking that, if he could sell sets and not give service of any kind, that I ought to be able to sell a good deal more *with service*. A manufacturer at this time was offering a few all-electric sets at a very low price, and four of these sets were bought and offered for sale. This was in July and, at first, there was not a prospect in view; but by the end of the week two of the sets were sold and two more prospects lined up. By the end of the next week, the last two sets were sold, and two more expensive sets with them.

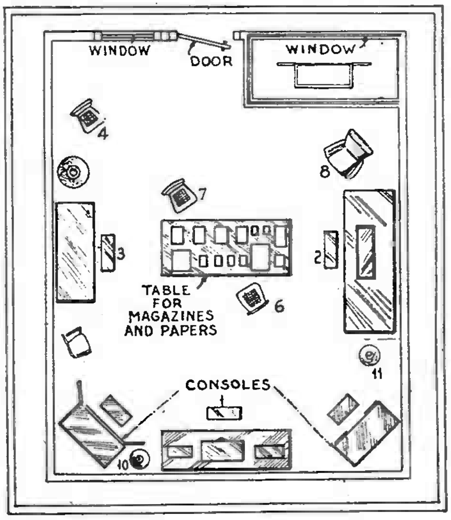

Fig. 1

The layout (not to scale) of Mr. Rockhill's little display room: 1, 2, 3, benches; 4, 5, 6, 7, 8, chairs; 9, 10, 11, floor lamps.

Radio Sets—Power Amplifiers—Accessories

F. C. ROCKHILL

Authorized R. C. A. Radiola Dealer

St. Regis Falls, N. Y.

Radio Sales and Service

October 21, 1929

Dear Sir:

You can buy a Radio set most anywhere now; but you cannot match the values that we offer right here at home. There is also the question of service. If bought from us, we are right here to give you prompt service; no waiting for an outside Service Man who has more ground to cover than he can—so you are left waiting or you must find some one else.

Our sets are made by the largest Radio Company in the world (*Radio Corporation*) and there is a model to suit every one. Prices range from $88.50 to $750.00 and the quality is the best regardless of price.

They are sold on the easy payment plan and terms can be arranged to suit you. Won't you call and look these sets over, or mail the enclosed card and we will call on you?

Sincerely yours,
F. C. ROCKHILL.

The introductory form letter.

Encouraged by this, I took steps to obtain the agency for one of the best-known lines of receivers; and I will tell something of the methods which I am using to sell them. It must be remembered that this is a small town (in northern New York State) and that my procedure is adapted to a small community. Be that as it may, one must experiment.

Methods of Selling

The first thing I did was to consider the dealers already engaged in the radio business in this town; and then to decide upon the type of advertising to use in competition with them. The company which furnishes electricity to the town employs two men selling for them, constantly. A garage in another town also sold here.

To call the attention of prospective customers to my sets, a form letter (reproduced here) was sent out broadcast. Prospects' names came trickling in; and a close study of each name was made, to determine what receiver price class would interest them most. Then a follow-up letter, describing the apparatus that seemed most suitable to their requirements, was sent to each.

A display room on the main street was fitted up (as indicated in the diagram, Fig. 1, which shows the arrangement). Only one receiver of each model is kept on display; the reserve stock being out of sight. Chairs are arranged in a homey manner; no wiring is visible in the room, which is about 12 x 14 feet. When a prospect comes, we try to avoid the appearance of a place of business; in other words, we allow the customer to "sell" himself. This plan has proved very successful, so far.

In addition, outside selling is carried on. Names of other prospects are secured, usually from older customers; and we call upon these in their own homes. An allowance, determined by the sale made and the selling effort required on our own part, is made to customers who assist us to a sale.

The local newspaper carries our advertisement each week, and slides are run during each show at the local theater. At the present time, we are building an amplifier for use in the theater, and we expect to obtain a lot of good advertising through this.

Follow-up cards are used on every sale; and all service calls are noted on these. The price received for the set is listed in one column; the cost, with express charges, and service charges during the period of free service (90 days) are noted in the other. At the end of the ninety days, a balance is struck, and our net profit listed on that page. The rest of the sheet is used whenever accessories for that set are sold; so that we have in compact form a record of all the business given us by the owner of that set.

As we carry on independent service work also, our overhead is computed on the sales made by both departments, and deducted; giving the net profit.

Dear Sir:

I hear that you are interested in a new radio receiver; so I am writing to you to tell you about the Radiolas 44 and 46.

The 44 and 46 use the new Screen-Grid tubes that you hear so much about. Three of these tubes are used in each machine, two as radio frequency amplifiers and the other as a power detector; which gives to this Radio the ability to receive far distant stations with great volume. The amplification in the detector stage is so great that only one stage of audio is needed; this part of the receiver employs another new tube, the 245 power tube which gives a volume and depth of tone that has never been equaled before.

The 44 is a compact table model in a beautiful walnut veneer cabinet and the 46 is a console model with the famous Radiola dynamic speaker built in. Both are single dial with the volume-control knob mounted on the same shaft with the tuning knob; making this Radio one that can be truly operated with one hand.

Call and see these machines as they must be viewed to be appreciated, or mail the enclosed card and one will be brought to your home for a free demonstration. May I hear from you?

Truly yours,
F. C. ROCKHILL.

A sales letter for certain models.

> Dear Sir:
>
> I have just received a new Radiola 33 that I would like to place into your home on demonstration. *Gratis.*
>
> This is an all-electric radio of the latest type and sells complete for only $88.50. This machine is sold with our usual guarantee and is serviced for a period of ninety days free of all charges.
>
> They may be purchased on the easy-payment plan and a liberal allowance will be made for your old radio set. Simply mail the enclosed card or call and you will find me at your service.
>
> May I hear from you?
>
> Very truly yours,
> F. C. Rockhill

A letter to a low-price prospect.

Making Service Pay

To make a service department pay in connection with the sale of sets was a problem at first; but it has been solved. Some of the methods used are described below.

All accessory sales are credited to the Service Department; as we feel that this is largely responsible for these sales. This, of course, boosts the showing of this department a good deal.

A card-index system is used, in which we list all set owners who are near enough for us to service quickly. A separate list is kept of set owners who live at a greater distance.

On each owner's card, as with sets sold by us, there is recorded the make of receiver, work done and accessories sold. When a call comes in, this card is consulted; and with the information provided by the customer, a rather accurate forecast of the trouble to be expected can be made.

Once each month the file is gone over; and a letter suggesting a visit from the Service Man to check the performance of the set is sent to each owner who has not put in a call for ten weeks. A charge is made for each call, the amount depending on the time required to come and go.

Replacements are charged at the regular list prices, plus the price for labor. The tubes in the set being serviced are tested; and new ones put in to replace those which do not show up as well as they should. This one feature saves many "no charge" calls; and the customer is generally well pleased, since the set performs much better. After servicing the set, the Service Man calls to the owner's attention any accessories which would improve its performance; and this results in quite a few additional sales. In addition, it gives the customer the impression that you are taking a lot of interest in him.

This fall we obtained from the R. C. A. two-color postal cards (in sets of six) calling the attention of the set owner to the fact that new Radiotrons might make the old set work as well as when it was new. These were mailed at intervals of six days; and the results were very satisfactory. The cost of the mailings was small—just that of the cards—and we trace to them the sale of several A.C. dynamic speakers to owners of old A.C. sets who had magnetic speakers, as a result of gaining admittance for the Service Man to the customer's home.

> Dear Sir:
>
> I would like to call your attention to the fact that the Radiola 60 for $138.00 is now one of the best buys in the radio market today; so I am taking the liberty of writing you regarding this set.
>
> This set uses nine of the new A.C. tubes in the famous superheterodyne circuit, which makes it one of the most powerful, selective and sensitive of sets. It also makes use of a power detector, and has only one stage of audio amplification; which results in a true and lifelike tone.
>
> It may be purchased on the easy-payment plan and a liberal allowance will be allowed you on your old set. Simply mail the enclosed card or call, and you will find that I am glad to serve you.
>
> May I hear from you?
>
> Very truly yours,
> F. C. Rockhill.

Short and to the point.

Some Service Hints

Here are a few of the technical problems that we have encountered:

Tube distortion happens often in sets having a '71A power tube; and at first gives the impression that the speaker is loose and rattling. It is due, however, to low filament emission; and a new tube corrects the trouble at once. Watch for '27 tubes that have a blue haze when operating; and for shorted elements in the '45s.

Sometime the "Radiola 33" does not seem to be as sensitive as it should be. Test the tubes, and put the best '26 in the second socket from the right (facing the receiver). The compensating condenser should be adjusted just below the oscillation point. This unit is located at the back of the chassis, and may be reached through a small hole in the back of the cabinet—the last to the left, facing the rear of the chassis.

In the Atwater Kents, watch for shorted by-pass condensers and for an open voice coil in the dynamic. The plate voltages will generally read low if condensers are shorted. At times, too, the voice coil in the speaker will ground to the speaker frame; so, if everything else seems O. K., test for shorts between the speaker terminals and its frame.

A TIP TO THE R.M.A.

JUST what is your system of testing a radio? Until a friend of mine asked that question I don't suppose I ever gave a thought that I had a "system" of testing a radio. But, if I *must* explain the magic secret—

In the first place I want to emphatically state there isn't any "secret;" knowledge, experience, and imagination are the foundation; something you have to *work* for to get.

Knowledge of what goes on inside the coils, condensers, and tubes, according to radio theory; the practical application as shown visually by inspection and meters; experience that teaches you just what to expect from a certain location and the complete radio installation you are working on—plus an imagination that changes you into a "bug" and you mentally crawl through the wires until you find the leak or obstacle that interferes with the normal action of a radio. Perhaps this is the "magic secret" referred to.

No two sets are alike; no two customers are the same; conditions vary in different localities; even a variation in service men due to a difference in knowledge, experience, and imagination makes it a mighty hard proposition to give any cut-and-dried system of testing and checking radios.

One store sends its service man around with a pocket full of tubes and a Beede socket meter; another service man has a Jewell, Weston, or Supreme Set Analyzer. Would you expect the same system of testing with all this varied equipment? No.

The Manufacturer's Part

The real answer to the question must come from the R.M.A. Manufacturers must, in the near future, seriously consider the independent service station. Few of the stores selling radios pay enough attention to their service department; thus forcing the customer to call in an independent service man when they want satisfactory service. *It's up to the manufacturer* to see that these men are supplied with all the information necessary to intelligently repair the sets that have passed the usual guarantee, if the manufacturers want to keep in the good graces of the public.

Human nature is about the same the world over. When an independent service man writes to a manufacturer for a circuit diagram and continuity chart, and for answer is told it is not the company's policy to furnish any except to their authorized dealers, that company loses money; because a lot of high-priced advertising is going to be nullified in the circle of possible buyers that service man deals with.

It's taken me quite a few years to make my collection of circuit diagrams, continuity charts, and other information of past and present sets, and in acquiring it I also have been snubbed by certain manufacturers, who forgot I would repair their sets regardless of whether they sent me the information I asked for or not.

Standard Service Diagrams

Let the R.M.A. take this up. Have the individual companies furnish a light cardboard sheet for each receiver; one side a complete circuit diagram, the other side giving a continuity chart and what other information is necessary for testing the tuner and power pack. Let one standard set analyzer be the medium for making all tests and checks; eventually all service men will revamp their old ones or buy a new one. Have these charts at one central distributing point and advertise that *any* service man writing under his own letterhead or that of the store he works for, can have them either free or for the cost of printing. Do this, and each manufacturer will save many more dollars than it costs him; besides having a bunch of service men (and they are many) boosting instead of knocking. Not only that, but the manufacturer will have a check on these men who are such a "menace" to their slipshod dealers' service departments.

Most of the independents are giving better service because they have dollars invested, where the average dealer has pennies. Out of the limbo of experimentation and guesswork, we (my son and I) are building up a profitable business, and are commencing to enjoy a reputation for good honest service; which, I believe, is what every service station should strive for. The money end will take care of itself.

If I Wanted to Make Money in Radio, I'd . .

And an authority suggests a few ideas that may be valuable to the dealer and Service Man

FIRST, I'd get a fundamental knowledge of radio and, not until I was thoroughly satisfied in my own mind that I was capable, would I go after radio work. I would never be satisfied to be one of those "I-think-I-know-it" radio men—I'd want a real insight into the underlying principles of radio and correct radio practice. With knowledge of this kind, "the sky is the limit." Without it, I'd realize that I wouldn't have a chance to attain real success. Besides taking a recognized radio course, I would subscribe to good magazines which, I know, would help to keep my knowledge up-to-date. The radio field changes so rapidly that what is the last word today may be entirely obsolete three months from now.

Assuming that I have developed my knowledge and my ability, I would make definite plans to get my share of the local business. I would make a thorough survey of my territory, taking into consideration such factors as general business conditions, number of set owners and the average income of my prospects. With this information, I would be able to gauge accurately my prospects and the business I could get. Then I would be ready to go after radio work in earnest.

I'd distribute business cards among the radio stores and those concerns handling radios as a side line. The business cards would carry a simple, "straight-from-the-shoulder" story, and that is all. In interviewing the managers of these concerns I would do all I could to prove to them that I was capable of doing radio service and installation work, and urge them to let me handle their servicing on a piece work or time basis.

I'd go after those stores, in particular, that sell radios on the side, and arrange special prices for installing and servicing their receivers over a period of about three months. I wouldn't worry about how much money I made in this deal; for I would know that, when the time period was up, I would have a customer worth every effort I had made. I would be very careful, in making comments when servicing a radio dealer's receiver, not to say anything derogatory. I would keep in mind that it is just as necessary for the customer to think well of the dealer who sold him a receiver as it is that he think well of me.

Then, houses with antennas visible are inhabited by people who own radios. If there was any way that I could get their names, I would do so and either call on them personally or write to them. If I couldn't get their names, I would drop handbills or business cards into their mail boxes.

I would run an "ad" in my daily or weekly newspaper and I would see that it was placed next to the radio programs, if possible. In this way I could bring to the attention of radio owners that I was a qualified radio-trician in a position to render satisfactory service. A small ad is just as valuable as a large one—one or two inches, one column, with a bold border—and a very simple story is all that is needed. I would change my story from week to week to show that I was alive and that I was giving thought to my prospects, talking to them through my little space in the paper.

I would particularly keep posted on general happenings of importance and the big broadcasts which usually go with them. One or two weeks before a particular event, I would word my ad to read something like this: "Get your radio working 100% before the big fight (the President's speech, or the Army and Navy game, etc.) by telephoning me at No. (my telephone number) etc." Many a wide-awake Service Man has "cleaned up" putting sets in shape for a feature broadcast.

I would put a sign on my porch or fence, advertising that I was a trained Radio-Trician and, to show that I was an electrical man, I would have it illuminated so that it would be visible at night. A sign like this wouldn't cost much and it would be a real beacon for distressed radio owners. I would put signs or display cards in windows of business houses that would give their consent; always bearing in mind that it is necessary to maintain a dignified and conventional front.

But I would always remember that good business cards constitute the best and cheapest advertising possible. These can tell my story simply but completely. It isn't necessary to come right out and ask my friends and acquaintances to let me fix their sets—a word about ability will put them "wise."

Uncle Sam's postal system is always a good business medium. I'd get up a snappy form-letter or circular, have it multigraphed and mail it to set owners whose names and addresses I had. I would give a great deal of attention to the appearance and contents of this circular letter—that is, make it look as if it contained a personal message. As an alternative or "follow-up," I could send out double post cards with perforations between, one side carrying a short advertising message and the detachable portion a stamped, return card, self-addressed to me. On the back of that, I'd have something like this: "Please call and inspect my receiver. I understand that you will render this service without any obligation on my part." After that, I would leave two lines for the name, address and phone number of the set owner. In the advertising portion of my circular card, I would list some of the many things that make for better radio reception, such as having a proper antenna, the addition of a tone control, etc. I would point out the necessity

The external appearance of an attractive radio store in a Detroit, Mich., neighborhood. Observe the window score board. This is the shop of Fred E. DeMerse

The sanctum of the Community Radio Store shown above; the workbench is equipped with the latest testing equipment with which a trained radio trician can give the kind of service that brings more business.

of having the tubes checked regularly. I would stress the importance of a periodic check-up of the entire receiver and mention the convenience of having extra speakers.

On every job, no matter how small or how large, I would see to it that my customers were thoroughly satisfied with my work. My guarantee of satisfaction must be more than a meaningless lot of words. In one or two cases, I might actually lose money on a job because of my guarantee; but that should be charged up to advertising and good-will cost. In building up any business, customer confidence is essential; and this applies to all customers, not just to a select few. It should be apparent to my customer that I have confidence in my own ability. A real guarantee will make him willing to pay as much, if not more, than he would pay the other fellow who does not guarantee his work.

I would not overlook the fact that my customers have opinions of their own and I would never force my opinions on them. I would merely suggest what I believed to be right and, if they still insisted, I would do as they desired if technically possible; even in spite of my better judgment. In other words, I would remember that the customer is always right and I would carry this motto in my mind in big black letters.

I'd be prompt and courteous. I would handle every call on the "dot." If I were rushed, I would frankly tell the customer, and make no engagements which there was the slightest doubt of my being able to fill. Nothing annoys a customer so much as to be kept waiting for a promised service call.

If I had a big job that would take considerable time, I would lend the customer one of my own receivers—it might be a custom-built set or one of those special mantel jobs that are being sold as second receivers for every household. It is a well-known fact that, when a set owner wants his set put in shape, even though it has not been working for months, he wants it "now." He doesn't want to wait. He wants radio reception and that is why I was called. A set left "on loan" usually results in good "word of mouth" advertising.

If I had specialized ability to handle difficult service jobs that required expert knowledge and special equipment, I would equip my laboratory bench with the most up-to-date devices for testing radio receivers and public-address systems, and I would use them. My diagnosis of receiver troubles would be based on facts—not on guess work. I would watch radio magazines for special testing circuits and devices and, if they would fit my needs, adopt them for my own use.

If I were definitely interested in radio servicing only and not in radio sales, I would stick to it 100%; but I wouldn't overlook the fact that the average dealer doesn't sell automotive receivers, doesn't make or sell custom-built receivers, has no inclination to be bothered with short-wave outfits and television equipment, and has no interest in special installations such as receiver chasses in book cases, in staircases or walls. I'd pick up as many of these specialties as might be profitable in my locality and push them to the limit.

Inside leads for new receivers, developed through my service work, could be followed by an arrangement to sell complete radio receivers on a commission basis for the dealers for whom I do extra work. On my own hook, I would sell accessories and build receivers to order as requested, even though they might not be those I specialized in.

I would secure a phonograph pickup and buy or build a power amplifier with two channels; so that I could furnish music for parties, plays and church events. Of course, I'd give considerable thought to the selection of records, including the latest dance records, symphonic numbers and popular music. A small ad in my local paper would book me up, months in advance, for business of this kind which flourishes all the year round.

Lastly, I would never forget that earning money is like making a garden—the ground must be prepared, the seed be planted, the sprouts cared for and the plants protected in order that a rich harvest may be reaped. Promptness, courtesy and ability build up a good reputation; and profitable business naturally flows to the man who can be depended upon for real service.

Sales Dollars from Your Telephone

WHEN a customer wants radio service he wants it in a hurry. Is your telephone number well known? Is it easily remembered? How many people know your telephone number offhand? How many people have your telephone number at their finger tips and associate it with your business in their minds? Do you make it easy for customers to call up your office, or do they have to fumble through a big fat telephone book for your number?

One cannot overestimate the value of one's telephone number. It should occupy a prominent place in every piece of advertising, on letterheads and billheads, circulars, blotters or what not, statements of account, receipts, wrappings and containers. Displaying your telephone number prominently adds thirty per cent. to the value of your advertising.

Newspaper advertising, when used, should always feature the telephone, which is just as important as the firm name and address; and a reproduction of a telephone or of a person talking into a telephone is laways an insured eye catcher.

"The telephone,, if rightly advertised, is your greatest silent salesman," says one radio Service Man interviewed: "It pays to emphasize your telephone number in all of your advertising, and particularly in the classified telephone directory, which is frequently a great first-aid to sales building.

"Advertising your 'phone number prominently in the telephone directory with ample display space is not only profitable advertising, but it also brings in business; because the classified section of the telephone directory is fast becoming a dictionary of where to go, what to buy, etc.—thus making a mere listing unprofitable and a prominent display advertisement a sure business getter.

"When a person is unfamiliar with your other advertising or forgets your trade name, the chances are they will immediately look in the classified section; which emphasizes the importance of having an attractive set up, one that will quickly catch the eye. A person consulting a telephone directory is generally motivated by the type of ad which he sees there. The eye is naturally attracted to the best and most prominent display, and a new-comer will invariably say to himself: "There, that looks like a good reliable radio man—I'll just give him a ring."

Of course, every telephone ad should be dignified, contain an attractive illustration, and the 'phone number should be prominently featured in large display type, with a reproduction of a telephone or of a man or a woman talking into a telephone. Every telephone directory ad needs certain "action" elements in its layout; because there must be stored within the ad's limited space enough latent energy to cause the message to spring out at the prospective customer when he opens the page. This can be best accomplished by:

Using, for prominent portions of the message, distinctive type which conveys the impression of action, and designs containing "action" elements; curved and slanting lines usually convey more action than straight horizontal lines;

Illustrate the telephone number by pictures of a telephone, or animate objects in action; preferably something associated with your business, which is being advertised.

In all cases, be sure that the telephone number is displayed.

Several radio dealers of Washington, D. C., have taken different means of emphasizing their telephone numbers; some of the best of the displays are reproduced in their advertisements.

As the prospective customer turns to the classified telephone directory section of radio dealers, he immediately finds the most attractive ads and those which naturally catch his eye; and he invariably picks those phone numbers which are in largest letters, while others, less imposing, are ignored.

When the radio dealer circularizes his mailing list, it is also a good plan to make a special feature of his telephone number. A telephone slogan may also be used to drive home the advantages of using the telephone: such as "As Near As Your Telephone"; "Prompt and Efficient Service Over the 'Phone"; "Save Worry—Just Ring Main 100," etc.

Some radio dealers prefer to select and use a trade name which will get them at the top of the telephone directory list, such as: "Acme," "Ambassador," etc. A lot of people, especially newcomers, are looking in the telephone book for the name of a radio man; and it helps to get more business when he heads the list.

The radio man who seeks to enlarge the scope of his business contacts cannot help but see the value of the telephone, not only as a customer convenience, but as a valuable first-aid to business building.

How to Run a Service Business At a Profit

An article full of business shrewdness and experience, for every Service Man to read

OFTEN, Service Men come into my shop, look at my test equipment and ask me if it is not foolish to spend so much for equipment that is not absolutely necessary, when I could get along with one-fourth of it and still have more than ninety percent of the radio repairmen? My answer is, absolutely, "No!" The impression it gives to the customer, and the advertising it gives me as an expert who takes pride in his service work, is worth the price of the equipment if I never used it.

My test bench is just inside the door; so that, the instant a customer enters, it is the first thing that catches his eye. As I happen to be located in a district where there are a great number of factory workers, they tell each other about my equipment; and consequently it gives me advertising that I cannot get from newspapers or hand bills.

The real Service Man who is capable of giving his customers a real job, and can hold on through the business crisis we are going through, will be able to make money in the next few years and from then on.

Overproduction has caused the dumping of sets at low prices which have induced people to buy sets, that they would otherwise have done without for the next couple of years, on account of the price. So, instead of moaning and cussing the "gyp," we should thank him; for it is going to mean millions of dollars to the Service Man in the next few years.

Another thing we should be thankful for is the return of the superheterodyne. The "hammer and cold chisel" men, and the fellow that once built a radio and now does repairing on the side in the evening, will be put out of business; because they haven't the equipment, don't know supers, and the peaking and balancing of this circuit is going to be "gravy" for the old-timers who used to think the old Best, Victoreen, Ultradyne and Lincoln were the "berries".

DIRECT-MAIL ADVERTISING FOR A RADIO SERVICE SHOP

EVERY month, Mr. Martindale sends a MARTIGRAM to each customer and prospect on his mailing list. For this purpose, the photograph which forms the illustration at the head of page 43 has been reduced to post-card size. The "copy" for the cards is changed regularly: some are specially written for professional men, some for business men, and some for the general run of customers. A few of these advertising bullets are quoted below:

FOR PROFESSIONAL MEN:

MARTIGRAM

From one professional man to another. You have studied to make yourself competent and efficient and take pride in your work. So you can appreciate what 11 years of repairing, with the same ideals, have done for us.

MARTIGRAM

You give immediate service to your patients. Our customers get the same prompt, courteous treatment.

MARTIGRAM

It is not ethical for you to advertise as I do; and your business is advertised from the satisfied patients. Eighty per cent of our business comes the same way.

MARTIGRAM

Tubitis is marring your radio pleasure, just as a cylinder missing in your auto would spoil your driving pleasure. Have them renewed. I handle all standard tubes; let us call and renew your tubes.

MARTIGRAM

Last month we tested one hundred and forty-seven sets of tubes. Eighty-one had one or more weak or bad tubes, and were improved with new tubes. HOW ARE YOUR TUBES?

FOR "LAY" SET OWNERS:

MARTIGRAM

We will wager that, some time or other, you have listened to one of the hundreds of sets we built when radio was young. We have serviced the sets of many of your friends. GIVE US A CALL.

MARTIGRAM

You get the most pleasure out of your set in the evening. That is why we will gladly give you night service at the same price.

MARTIGRAM

Is your set working as good as it used to? If it isn't, don't you think that it would be a good idea to call us and have it put into new condition?

MARTIGRAM

We believe it is not how much your service bill is in dollars and cents that counts. But it is how much you get for the money that counts.

MARTIGRAM

You have to depend on the Service Man's word that a certain tube or part is bad in your set. Don't you think that you will get a more honest deal if you are paying for service, than you would if you got free service and what the Service Man gets would be what he sold you?

The radio Service Man is the worst-paid craftsman today; for the stores and retail radio shops look on the Service Man as a necessary evil and it is not "How good a man can I get?" but "How cheap can I get him?"

The wages paid in this town and a great number of other towns are from twenty to thirty dollars a week, and the man must furnish his own car and test equipment. That is why there is so much dishonesty with these men; for they have to steal to make both ends meet.

The Service Man's Pay

My men are paid a dollar for each call and are guaranteed six calls per day; then the remainder are divided among them equally, and the next ten pay them seventy cents apiece and, from then on, fifty cents each. They furnish their own cars; but I furnish their test equipment, tools and oscillators and output meters.

My service charges are $1.50 for the call and fifteen minutes' labor; and from then on it is $1.50 per hour, of which the Service Man gets 50c per hour. All Service Men are instructed not to make any major repairs on the job—unless the customer will not let the set leave the house—and never to replace a part with another that does not look exactly like the one that was defective; as the customer cannot understand why, if there was a green resistor in the set, you did not put in another of the same kind. He does not believe that the black one that you have in your kit is of exactly the same resistance, (if it is, why is it of a different color?) and, the first bad tube or bad night, the black resistor is blamed.

Any calls back within ten days the Service Man must make on his own time and at no charge to either customer or shop; these average about 2 per cent, or less.

Every man working for me must be married and over 25 years of age, have over three years' experience, dress neatly and have a good personality; and more than three complaints in regard to careless or unduly rough handling, impertinence or not keeping a promise, writes his discharge ticket.

When we get a service call we get all information possible and place this on the service ticket, together with the shop diagnosis, which is correct about 80 percent of the time. Each ticket has the customer's name and telephone number; and he is phoned, five days after the call was made, to see if he is satisfied and to verify the price he paid.

An inflexible rule is cash to all, regardless of whether the customer is the president of our largest factory or a street cleaner;

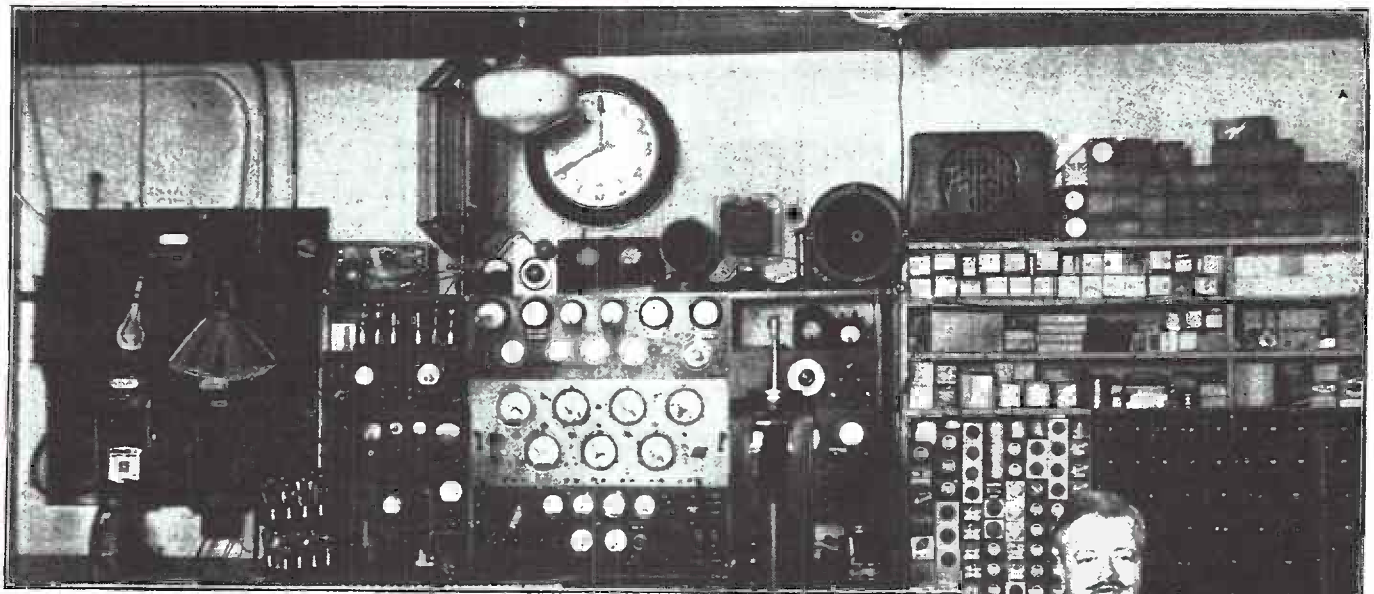

Not only does an elaborate testing board like this make work easier and surer, but it impresses customers. The Service Man needs "showmanship" to sell his services to better profit.

for one man's dollar will buy just as much as another's.

When a Service Man is asked for credit, he is told to explain that he must turn in the money out of his own pocket if they do not pay him. Of course, he does not; but it is surprising how many who ask for credit pay cash, and the small percentage of losses due to their believing that the man doing the work will take the loss. And when one who has had credit comes in and pays, I always say before the customer: "Credit this to Service Man number so-and-so," thus leaving the impression that this had been charged to the repairmen.

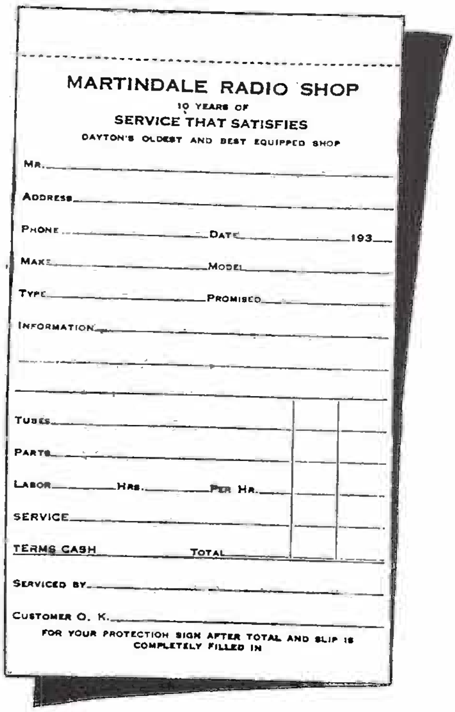

MARTINDALE RADIO SHOP

10 YEARS OF

SERVICE THAT SATISFIES

DAYTON'S OLDEST AND BEST EQUIPPED SHOP

MR.________

ADDRESS________

PHONE________ DATE________193__

MAKE________ MODEL________

TYPE________ PROMISED________

INFORMATION________

TUBES________

PARTS________

LABOR________ HRS.________ PER HR.________

SERVICE________

TERMS CASH TOTAL________

SERVICED BY________

CUSTOMER O. K.________

FOR YOUR PROTECTION SIGN AFTER TOTAL AND SLIP IS COMPLETELY FILLED IN

This blank in triplicate shows the customer what he is getting and gives an office file and mailing list for "Martigrams," etc.

I run catchy advertisements of three or four lines in all the newspapers (by the year); such as "Service That Satisfies;" "Service by Men Who Know How;" "Dayton's Oldest and Best-Equipped Shop;" "We probably built your father's set;" "Sooner or later you will call us"; "After the rest have tried, we'll fix it;" "You don't get your hair cut at a blacksmith shop, why take a chance with your Radio?" etc. We find these pay if they are run continuously.

I often have customers who do not want to get a set fixed until they know what it is going to cost. Since the Service Man has no authority to make a price on a major repair, he tells the customer that he will take the set into the shop where it can be properly tested and will call back telling the exact price; and if that is not satisfactory he will return the set and the charges will be one dollar.

Less than half of one percent. have to be returned without making the repair.

I have on my call book the names of twelve Service Men, located in different parts of town, whom I can get in touch with and so give ten-minute emergency service. Often times, late at night when there is no Service Man on duty, and on holidays, I have made arrangements with a leading taxicab company, to deliver a tube and collect for it and refund to me. In sending two tubes we pay the taxi bill and this often leads to the sale of an extra tube.

I have a large gold-leaf sign on the window—"TUBES TESTED FREE"; this brings in a number of tubes. In one month we tested 506 tubes of which 124 were defective or weak; and we replaced 101, or about twenty percent., at a profit of $100.50.

Each service man has a copy of the OFFICIAL RADIO SERVICE MANUAL in his tool box; and practically all radio books and magazines are on file and subject to easy access by the men. Any of my Service Men can have use of the reference library and can call in and get a resistance or condenser value while on the job.

It does not pay to replace a single condenser section and, whenever possible we replace the entire block.

Mr. Charles G. Martindale, the author of this article, has built up a large business under severe handicaps. Here, he tells other Service Men how.

Equipment for the Job

Below I am giving a list of what every Service Man carries in his car:

1 Jewell 4-Meter test kit; 1 Jewell oscillator and output meter; 1 Hickok ohm- and capacity meter; neutralizing adaptors; 3 screw drivers L.M.S.; 3 spintites; small drill press; 10 drills; rosin core solder and "Solderall"; 1 roll push-back wire; 1 roll tape; 1 clutch nut holder; 1 screw starter; 10 assorted resistors; 1 dentist's mirror; 1 bottle denatured alcohol; 1 neon "testalite"; 6 volume controls; 1 pair headphones; 1 knife; 3 different kinds of pliers; 2 neutralizing wrenches; 2 neutralizing screw drivers; 25 tubes; 1 box assorted screws and nuts; 1 No. 6/32 tap, 1 No. 8/32 tap, and wrench for above; 1 soldering iron; 1 extension cord; 1 flash light; 1 bottle furniture polish; 10 assorted condensers, .00025- to 2 mf.; 1 magnifying glass; insulators and ground clamp; batteries, "B" and "C"; 10 ft. belt cable.

For the above a Service Man must give $300.00 bond, and he must pay for the repair of any equipment broken or burnt-out.

My service men average better than $50.00 a week and I can show a profit in spite of business conditions; simply because I use service as a business and not as a necessary evil and have tried to build for the future.

I find that a majority of men would rather have their service at night; so the service day starts at four o'clock and runs until eleven, except for the aerial crew.

Meeting Cheap Competition

The average production radio, after it has been used 60 days, can be improved 20 to 100 percent. by three hours' labor of a good Service Man with the proper equipment. This is what I have to sell and my Service Men are trained to sell it. A man listening to a set operate, and knowing the receiving conditions in that locality, can just about tell how much benefit that kind of adjustment will give; and has a good chance of a five-or six-dollar job for which the set owner is glad to pay and will tell his friends about.

We have the 50c and $1.00 Service Men in this town also; but I cannot see why they should worry any good service organization. Of course, they will get some business, but it is a class of service that a high grade shop does not want.

When a man complains about the $1.50 service call I ask him whether he thinks that the man can get to his house and repair his set in less than an hour; whether he thinks a first-class mechanic will work for 50 cents; whether he thinks such a man will give him an honest test of his tubes; and whether he honestly thinks that the job is not worth more?

My men never replace a tube unless it is defective or down ten percent. Every tube tested is marked and labelled with its condition, with the advice written on as to the date when they should purchase an entire new set.

I handle no cheap tubes. Nothing but standard brands and highly advertised and made by companies whose adjustment policy is fair.

I have seen over a hundred radio service shops come and go in this city and have tried to analyze the cause of their failures; in most cases, it was incompetence mixed with the idea that you can gyp the set owner and he will never find it out. Another class start with the idea of getting all they can in the biggest chunks that they can get it in. Also, there are shops that fail to watch their collections; this alone has put more good high-class repairmen out of business than anything else.

Psychology in Servicing

There are two kinds of service: one for the man, who likes to see the Service Man tighten up the inside of a set and check everything for tightness; and the other is for the woman who delights in a Service Man who, when he is through, takes a rag and some furniture polish and wipes off the fingermarks and a few scratches, (whether they are imaginary or real).

And, above all things, if the Service Man must make dirt, he must clean it up; and he must listen interestedly while the customer tells him how he got California at seven o'clock without an aerial and what a wonderful set his old three-tube blooper was.

I find that the customer is better satisfied with a man of some age even if he doesn't know as much as a younger man might, for the majority of sixteen- or eighteen-year-olds are too cocky and have no sense of responsibility.

There are two things in the service business that are absolutely necessary for the successful service shop. The first is the arrangement you have for taking care of your telephone calls; the person who answers your telephone must know radios, must have a pleasing and sympathetic voice and be able to give information in a way that the customer can understand. Then, too, you must be careful never to send the same Service Man again on a job where the customer wasn't thoroughly satisfied.

The second is the appearance of the shop. Keep it painted and use colors that harmonize. Keep the junk hid away, and have one rack in plain view for sets and chasses brought in for repairs, and another for those that are done and ready for the owner's call, or to be delivered. Have these tagged (with the charges plainly written on the front of the tag and what was done to the set, and the parts used, on the back) and let the customer keep this tag.

All telephone orders are taken in triplicate: one copy is kept in the office, so that the Service Man may be reached by telephone if I have another call in the same locality; and the other two are given to the Service Man who is to make the call. The duplicate is given to the customer; and the original is signed by the customer after the full charges have been filled in and what was done to the set put on the back. This signed copy is filed at the shop (in alphabetical order) and the file is used for reference and as a mailing list.

Get the highest-priced gold-leaf signs on your windows; for they are an index to the kind of business going on inside. They are your bid for the prospective business going by your place and are your highest-class salesmen, whose service costs you nothing.

Building Up a Clientele

I have a number of calls every week from prospective set buyers who ask me which set is the best, or which set they should purchase. I name over three or four of the best sets and try to explain the difference between them and let the customer decide for themselves. By helping them decide, you are the first one they think of when they need service.

Give information freely and courteously and, at the same time, sell yourself and your service. It may be a year before you get any results, but it will pay dividends. And do not make your store a "hangout" for a bunch of "radio nuts" and "radio liars."

When you sell a short-wave or television kit, tell the customer just what he can expect. Then, if it works better than you told him, he thinks he is smarter than you are; and he tells his friends to get a kit and he will help them build it. This means business for you and that is what you want.

A stock of used and new parts is not "to be sneezed at"; and that will be better as short waves and television become more popular.

The best way to get yourself a real live mailing list is to get a bunch of station logs with your name and business on them. Get a high-class log that every set owner will like; then, when a customer comes into the store, give him one and ask him to write the names of a number of his friends on the pad, as you want to mail one to each of them. Also, have the Service Men work the same idea. A list of this kind has very little deadwood in it, and you do not have a lot of losses from sending advertisements to people who have no radios.

Radio service used to be referred to as a "game"; but that day is past and, fellows, if we want to survive we have to dig and specialize in our line. Forget competition and make ourselves stand out above the others in the same line. It takes time, but it can be done: and don't be discouraged. Good times are coming.

Now, I am not advertising RADIO-CRAFT or the Gernsback Publications—but they have done more for the radio Service Man than all other books and magazines published (and I take them all) and the serious perusal of them will do more to keep you up to date than any other one thing.

From the illustration heading this article, you will see that I am an invalid and that my means of transportation is a wheel chair in my place of business. For the outside I have a special-built automobile which I have driven 90,000 miles in six years; so you see that I get some pleasure out of life also. I absolutely do not trade on my physical condition and my first job, on meeting a strange customer, is to make him forget my condition and do business on a straight business basis, and to let him know that I want no favors or edge on my competitors.

I went broke in the auto service business eleven years ago and started in the radio business by building crystal sets. I have followed the business right on, having constructed 667 custom-built sets and serviced over 9,000 sets in that length of time. I am married and have made some money by using my head and one arm; so, fellows, you can make it if you try hard and use the old bean as well as both arms and legs. I do not want you to think me egotistical, but I am telling you what you can do if you concentrate and try hard.

I may later write some articles on service kinks and the methods I have found for quick servicing of different sets. I am no "flying service man"—and I have not been able to find one.

BETTER AS A SIDE LINE?

Since the advent of the "all electric" two years ago, I have discontinued building and devote my spare time to servicing entirely.

I have a car and testing equipment of my own make, which I have found adequate for nearly all occasions.

My motto has been to fix the set on the spot if possible; which, of course, requires quite a large supply of essential parts on hand. But I find this method makes friends, and I am sure of another call; and also a recommendation to someone else in need of radio service.

Going After Service

How advertising and publicity rebuilt a business rapidly for an enterprising Service Man

Telephone 3-2414

J. P. Kennedy
418 West LaSalle Avenue
South Bend, Indiana

J. P. Kennedy's Radio Service

OUT of the game for a year. Your business wrecked in the midst of a national economic upheaval: everything to win, nothing left to lose. Would you go under or fight? That was the question I faced a year ago and chose to fight. You can do some shrewd thinking when you're hungry.

The first problem requiring thought was to reach the greatest number of people with the message, not only that a radio Service Man was available, but that they needed this particular Service Man right now. Under the mistaken idea that low prices would get the results, five hundred government post cards were printed and sent out offering service at one-third the regular rate of $1.50 for a limited time. The idea practically failed. The "something-for-nothing" people were the only ones that called; and they wanted more for their fifty cents than two ordinary calls would entail.

The next idea had more merit and certainly more profitable results. The radio page of our leading local paper was such an uninteresting sheet that most of the radio advertisers requested other locations to make their copy effective. "Let's write something of interest for that page, something that will consistently attract readers who, in turn, will see the ads." That idea appealed to the editor. He offered to run free with my name at the head, a daily column on radio, if I would supply the copy.

A question and answer column seemed the logical medium and, as enough questions would not come in to supply the daily assignment, it would be necessary to write not only the answers but the questions. To make them appear genuine, fictitious initials could be signed. It took six hours of typing to prepare the first two weeks' copy. The idea clicked instantly. Actual fan mail began to come in with real questions. People began to ask, "Who is this chap, Kennedy?" Sensing that query, I ran ads, tieing in with the column, with my picture and suitable copy. The calls for service were increasing daily.

A Direct-Mail Campaign

There are a large number of wealthy people in this city (South Bend, Indiana). Their trade and good will was the next objective. Tortured with staid mimeographed advertising, that went in the waste basket, these people are the hardest to reach. Personal calls are impossible with countless butlers, maids and private secretaries to block reaching their superiors.

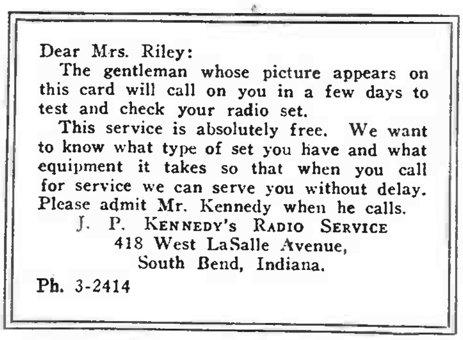

Dear Mrs. Riley:

The gentleman whose picture appears on this card will call on you in a few days to test and check your radio set.

This service is absolutely free. We want to know what type of set you have and what equipment it takes so that when you call for service we can serve you without delay. Please admit Mr. Kennedy when he calls.

J. P. KENNEDY'S RADIO SERVICE
418 West LaSalle Avenue,
South Bend, Indiana.
Ph. 3-2414

A postal with a picture, like the business card above—a two-color job which has suffered in reproduction.

What's Wrong With Your Radio?
BY J. P. KENNEDY,
Instructor of Radio and Service Engineer.

My Grebe set was one of the first electric outfits using an A and BC eliminator. The set has stopped though the tubes light and the bulb in the eliminator gets very hot.
A. H. L.

When an eliminator tube gets h
or shows a purple glow around
metal plat
ways mean
out in t
power pa
sive cost
block w

Profit by Experience
OF 2,000 OTHERS, CALL
J.P. Kennedy's
Radio Service
Ph. 3-2414. 418 W. LaSalle

OUR COMPLETE KNOWLEDGE OF RADIO MEANS MINIMUM COST OF REPAIR.
J. P. KENNEDY'S
Radio Service
Ph. 3-2414 418 W. LaSalle

$10.00 FREE
If We Can't Repair Your Radio Set
J. P. KENNEDY'S
RADIO SERVICE
Ph. 3-2414 418 W. LaSalle

What's Wrong With Your Radio?
BY J. P. KENNEDY,
Instructor of Radio and Service Engineer.

What problems are likely to be met with in moving a set to a lake resort and installing it there? J. F.
First, if it is an electric, the same voltage and frequency current you employ in the city must be available. (Vicinities near Grand Rapids, Mich., and Gary, Ind., may have 25-cycle supply instead of the 60-cycle

What's Wrong With Your Radio?
J. P. KENNEDY'S
RADIO SERVICE
Ph. 3-2414 418 W. LaSalle

A combination of publicity and advertising with small space—"bullets"—frequently repeated. Larger newspaper advertisements are shown below at the left.

DANGER from LIGHTNING
Striking your radio aerial eliminated. Special this week only, a regular $1.50 lightning arrester installed for only $1.00. Comply with your FIRE insurance requirements. (All sets we have installed are protected.)
YOU CAN LAUGH AT LIGHTNING
if you phone
3-241
J. P. Kenne
RADIO SERVIC

Your Wife
and Family Deserve
Lightning Protection
Lightning Arrestors
Installed
This Week Only
$1.00
J. P. edy's
RA CE

Regardless of where you bought your radio, employ
J. P. Kennedy's
RADIO SERVICE
Phone 3-6297
418 W. LaSalle.

19 Doctors,
12 Lawyers
4 Presidents
Of local corporations, and many other prominent men, noted for their discriminating judgement, consistently employ
J. P. Kennedy's
Radio Service
418 W. LaSalle
3-2414
For Economical Results.

The "ad" at the left was less successful than that in the center, which introduces "human interest."

Personal letters seemed the only solution. They must be sent in plain envelopes on plain white paper, with no letter head that would betray their commercial aspect. They must have human interest, discreet flattery, the personal touch, and a dynamic compact message—high-pressure stuff. Everyone who has lived in a given community, for a few years, knows at least the big civic and industrial characters. If not, almost any old citizen can supply not only the names but countless stories and incidents about these prominent people. There is your material. A typical letter appears on the next page.

Use of Good Printing

The problem of boiling a compact forceful selling message into a one-inch, single-column newspaper ad cost several hours study. The most effective of several dozen tried are reproduced here.

An important part of a Service Man's equipment is a good business card. Taking advantage of the methods used by politicians to get their personality across to the voters, I resorted to a business card bearing my own picture and a minimum of printed material. The more simple and unique the card is, the more dignified and effective it is with the most desirable class of trade.

Study the business cards of successful firms and men. Ask yourself what appealed to you in a particular card; take that idea and use it in your own card. Color, discreetly used, distinguishes a card. I use two straight blue lines (despite the extra cost of a second run by the printer) to get away from the conventional black, yet employ a cool color that will not distract the eye of the reader from the printed matter. I consider this card on a par with any other form of advertising I could give a prospective customer.

KENNEDY'S J. P. RADIO SERVICE

PERSONAL
HIGH QUALITY SERVICE
Reasonable
Rates

418 W LaSalle................3-2414

An advertisement in the classified telephone directory attracts attention at the right moment.

To supplement the business card, a personal letter of appreciation goes to every new acquaintance I make. It apparently does no harm to flatter new friends; they remember you long after you have forgotten them.

Studying the successful method of selling employed by allied industries, I took the idea of the persistent Fuller Brush salesmen and reworked it to sell service. The addresses of houses having an aerial could be secured by merely walking down the street. The city directory supplied the names of the occupants of these homes. I selected ten a day and mailed a government postcard bearing my picture and the message reproduced on the preceding page.

This announcement has been gaining entrance to 70% of the homes it is sent to. True, it costs time and energy to make these free calls; but half of those called on need new tubes, lightning arrestors, tone controls or actual repairs and—believe it or not—they buy them and average you $1.50 to $2.00 per call. The days when you could sit around the shop, and wait for the calls to come in, have passed. There is plenty of business if you go after it.

I tried an interesting experiment in selling lightning arrestors. The weather reports were watched carefully for an announcement of an approaching thunder storm; and an ad was then run with a scare headline in italics. *Not a single call resulted from the ad!*

The copy was changed, a little personal family interest was injected; and not only was a stock of slow-moving lightning arrestors sold, but I obtained the opportunity to sell tubes and other accessories on the same call.

Telephone Solicitation

On rainy days, and particularly in the evenings, it is profitable business to call old customers, who have not been contacted for six months or more, by phone. Offer to test their set free the following day while you're in their neighborhood. (Of course you make it a point to be in their neighborhood.) It is absolutely surprising how many type '45 and '80 tubes are sold on these calls.

The phone book provides an invaluable advertising service. Snappy copy that shows class, yet does not frighten away the financially timid reader, can be run in the business directory part of the phone book at low rates (compared to other advertising mediums) and you know that it is within reach of all your more desirable customers, day and night throughout the year. Where two phone books are issued per year, that which covers the fall period should have the largest and best copy you can afford to run; while just a simple card-like announcement will do in the book during the period of least activity in service work and during the time you are going out after the business. I intend to have copy in the phone book as long as I am in the service business.

A copy of a small-type phone book ad is given here.

The natural question other Service Men will ask, when they finish reading this article, is: "How much is Kennedy making with all these advertising stunts? How big is the city he's in?"

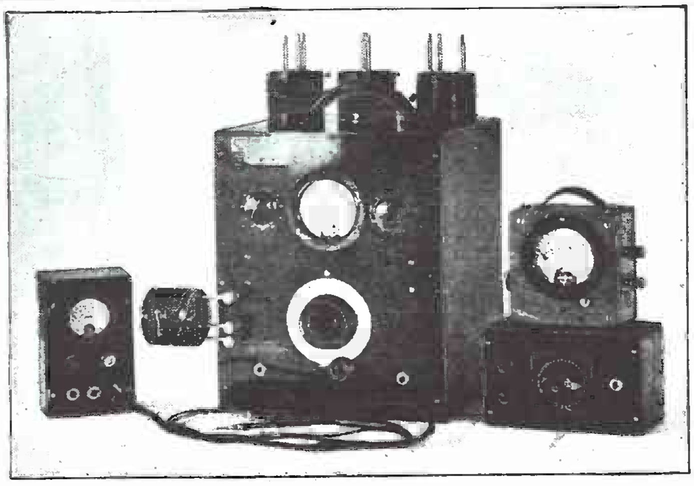

Mr. Kennedy has designed his own service equipment: above, an analyzer which is kept up-to-date; right, shop equipment. The 1000-cycle oscillator has plug-in coils to cover 170 to 6,000 kc.; it incorporates a galvanometer, for a grid-dip meter. There is also an 0-10,000 ("decade" adustment) ohmmeter; a 0.1 to 3.9 mf. capacity meter; and a milliammeter which reads 0-10-100-500 volts. Every unit has phone jacks, for quick connections with proper polarity.

418 West LaSalle Avenue,
South Bend, Indiana
October 1, 1930.

Mr. John Riley,
605 E. Howard Street,
South Bend, Indiana.

Dear Mr. Riley:

Have you ever had a person that sold you merchandise or service take a personal interest in your satisfaction after they secured your money?

A few years ago, I had the pleasure of repairing your Bremer-Tully radio. The gracious manner in which I was treated by both yourself and your charming wife left a pleasing memory. The air of culture and refinement that pervaded your home inspired me to exert my best efforts and utmost skill in repairing your radio.

Not hearing from you since, I presume your set has been working satisfactorily, but really it should be carefully gone over at least once a year. Tubes don't last forever. Improvements are available, such as static modifiers, better known as tone controls, new quick heating tubes and more efficient lightning arrestors.

I am interested in your satisfaction. Without knowing of these improvements, you might be talked into buying a new set, while your present set can be brought up to date at a fraction of the cost of a new machine. I want your friendship and the good will of your friends. This can only be obtained by serving your interests to the best of my ability. In other words, I want your radio service business. May I have it?

(*Signed*) J. P. KENNEDY,
J. P. Kennedy's Radio Service.
Phone 3-2414

One of Mr. Kennedy's diplomatic letters. A little blarney, and then a business touch.

The business will average $10.00 a day profit or return for labor while you work. Being human, I take a day off occasionally for a little golf; devote a few evenings a month to social affairs (there are some beautiful girls in South Bend and they are partial to young men in business); oversleep some mornings; attend the weekly meetings of the Kiwanis Club and take part in any civic affairs that call for volunteers. (That's real publicity plus the satisfaction of doing a good turn.) South Bend is an industrial city of slightly over 100,000 population, with a fine friendly group of people and with the well-known University of Notre Dame at its northern boundary.

The leading radio concerns have distributors located here who supply all the standard merchandise needed, without delaying you with shipping and burdening you with express bills. A minimum stock can be carried, because of the ease of securing additional supplies.

Other, less-aggressive Service Men are going broke here; so, unless you can bring in new and more effective ideas for selling service, stay in your own home town.

One ten-by-ten room in my home contains my desk, phone, service bench, and shelves for spare parts and supplies. No sets are brought in that can be repaired in less than an hour in the owner's home. All my equipment is hand-made. Careful workmanship and technical accuracy make my instruments as important in the eyes of my customers as their more expensive ready-made counterparts. Besides, after designing and building an instrument, I know how to use it.

A 1928 light coach-model car takes care of the transportation problem.

I sell Crosley, Echophone and Majestic sets where old sets are too far gone to warrant expensive repairs. All business is done on a cash basis. I am not affiliated with any other dealer nor do I care for their work with its limitations on selling that it would impose upon me.

During the winter months, I teach radio service work two nights a week to a public night-school class under the auspices of the local board of education.

Service Salesmanship

NEVER before have there been such great opportunities to make money by servicing radio as there are today. The finest and best radio receiver, sold only a month ago, may be now obsolete; since there have just come upon the market several new tubes which are a vast improvement and, of course, these tubes will better any radio.

The Service Man's business is, to give the community which he serves the best there is in radio. By this I do not mean selling gadgets, but incorporating improvements into your customer's radio.

Many Service Men, as well as the general public, regard the radiotrician's profession as merely a job of fixing receivers. I regard my work as giving my customer the best in radio reception and, of course at a profit. And I find the customer ready and willing to pay for real service.

Only this year, a great many supers have been sold that can be improved by the use of the type '35 variable "mu" tube. It will be necessary, if the set in which these tubes are to be installed has variable screen bias, to fix this at 75 volts (with a fixed resistor), and use a variable resistor for the cathode bias. The value of the latter depends on the number of tubes it is to serve. **(Fig. 1.)**

You will be surprised at the sales opportunities you will find if you take along with you, on service trips, a short-wave converter of the superheterodyne type. Most people are now "off" the plug-in adapters; the ideal short-wave converter installation is permanently connected up, so that either short or long waves can be selected by throwing a D.P. D.T. switch.

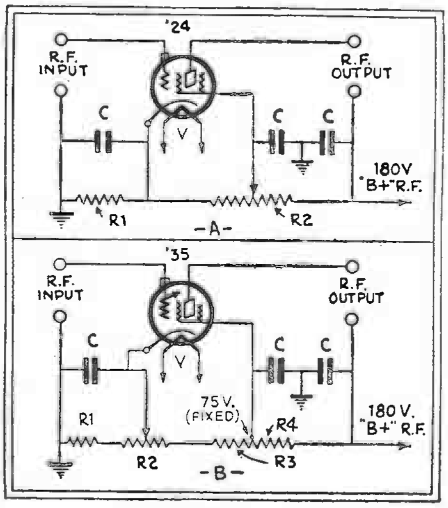

Fig. 1

To convert a standard screen-grid set for variable-mu tubes, the circuit is altered from A to B. Values depend on the set.

One of the ideas I have been able to cash in on is altering receivers so that the short-wave police calls can be picked up. This can be done on any receiver, merely by taking off turns of each tuned secondary. Sometimes it is possible to realign the trimmers and get frequencies high enough. I would not advise changing single-dial supers, unless you are thoroughly versed in this type of receiver.

Then there are the new pentode power tubes, which can be installed in any set, whether A.C. or D.C. There are several types for different filament voltages; consult the table of characteristics.

A great many sets have the leak-condenser detector; here a power detector may be installed, with consequent increase in both selectivity and tone quality.

In a district supplied with 110 volts, D.C., you will find any amount of battery-operated sets that can be changed to work off the house lines. Incidentally, there is on the market a new series of tubes which are ideal for this job, viz.: the '36, '37, and '38. All these tubes operate on the same filament voltage (6.3) and filament current (0.3-ampere). Bias can be obtained in the same way as in A.C. tubes, by the voltage drop across a resistor between cathode and ground.

There are a great many automobile receivers that can be improved by the use of these tubes.

Very recently there came on the market a midget receiver using three '24's, one '45 and one '80 type tube. I purchased a lot of four of these receivers for $70 and changed them to use two '35's, one '24, one '47 and one '80; which increased the range and volume most noticeably. The expense for two resistors, one output transformer and 4-mf. condenser came to about $6.00 per set all told. However, I happened to have these items on hand, salvaged from junk sets; and I sold these receivers for $69.50 apiece.

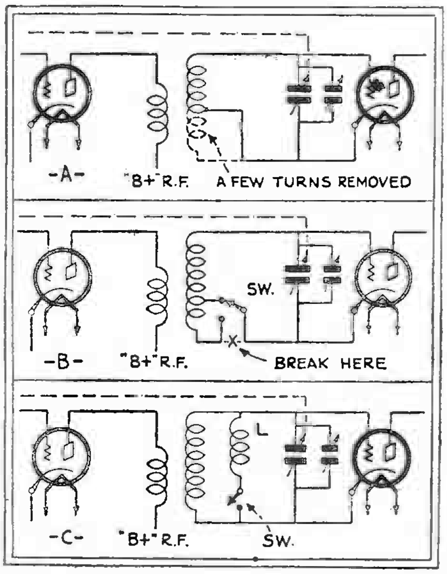

Fig. 2

To receive police calls, below 200 meters, it is necessary to reduce the minimum inductance of the tuning coils. Some methods are shown.

Use your own ideas, coupled with those of others. To amplify this statement, I cite one instance where I used another fellow's idea but did the job differently; I refer to using the new 2-volt tubes in the "Radiola 28." I made two adapters, one containing a 750-ohm resistor and one with a 4-ohm resistor; this saved opening up the catacomb. All changes were made externally; thus saving a great deal of time and labor.

Don't tell your customer, "It can't be done:" because *it can be done* and, if you don't do it, some other enterprising Service Man will do it and you will lose both the business and the good will.

SELLING RADIO TO SCHOOLS

IF ever there was a case of the "vicious circle," it is the problem of introducing radio in schools. School boards decide against radio installations for the reason that there is insufficient educational material available during school hours in the present broadcast programs. Broadcasters, on the other hand, refuse to provide more educational material during school hours on the ground that there are not enough schools equipped with radio to make the effort worth while. A perfect vicious circle. Yet the problem is not quite as hopeless, I believe, as it might seem. It so happens that the centralized radio installation may be employed quite independently of radio programs. By means of a microphone, it becomes possible for the principal to address the students at their own desks, without calling for an assembly. The physical-culture instructor can order "windows up," and proceed with brisk setting-up exercises, without having the students leave their classroom. The visitor to the school can say a few words to the students at their desks. Or, with a phonograph pick-up, it becomes possible to provide any desired musical program, language lesson, and so on. A radio installation, fortunately, has other uses besides the interception and distribution of radio programs. That is the idea which radio Service Men should sell to school authorities at this time.

RUNNING THE SERVICE SHOP At a Profit

If the Service Shop is not profitable, it is Mismanaged. This Article Shows How One Shop Was Made Profitable.

SOME months ago, a progressive radio manufacturer formulated a plan not only to make his radio-service department pay for itself, but actually to make it show a profit—and it did.

This plan is not just a theory but has already gone through the "laboratory" and is now ready for field service. The "laboratory" consisted of service departments—from the one-man business to the highly-trained "100 men" organization, as in the automobile industry, the radio service department is of utmost importance.

The customer "sends for" the Service Man and anxiously awaits his arrival. Because of his superior knowledge of things pertaining to radio, the Service Man's recommendation goes a long way with the customer—he is the "radio doctor."

The modern "radio doctor" should not consider his work done after the set is repaired. He should guard against future trouble. Such service builds confidence, recommendations, and increased calls.

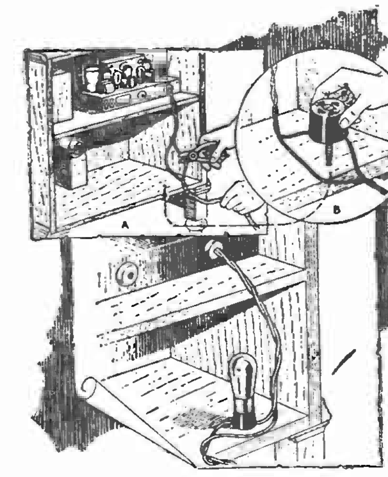

This illustration shows the ease with which an automatic line-voltage control may be added to any receiver.

After looking the set over, the Service Man usually finds a resistance, condenser, or tube which needs replacement. High voltage may have been the cause of the trouble—or just may have helped to make matters worse. At any rate, the set is repaired and a voltage regulator is connected in series with the power line—just to see how the set sounds on regulated voltage.

The new tube naturally arouses curiosity. The Amperite Plan even goes as far as to provide a simple selling talk for the "Service-salesman." The talk runs like this:

"Oh yes, lots of radio troubles are due to voltage fluctuations that we cannot see. The voltage has a habit of jumping just when you are not checking it. And those jumps raise the devil with the tubes, power packs, and reception. This automatic regulator keeps the voltage along the straight and narrow path. Acts like a shock absorber on a car—decreases wear and tear. Well, if I have an extra one on hand, I will be glad to install it—*and save you a service charge.*"

And thus, another automatic voltage regulator is readily sold, leaving the customer more contented, the dealer with a handsome profit and the Service Man with a worthwhile commission to add to his salary.

The new merchandising plan has proved to be exceptionally successful wherever it has been given a fair trial. One dealer has been averaging 28 automatic line-voltage controls per month for each Service Man—thus getting a net profit of $37.80 per month per man. Perhaps the best way to show the advantages of this plan is to present actual facts and figures taken from the experience of a large New York radio concern. Early in January, 1931, Davega, Inc., of New York City, one of the largest radio chain stores in the country, decided to try out the plan. This concern specializes in the retailing of radio sets and sporting goods. It operates over twenty-eight retail establishments in the metropolitan territory. All radio servicing is handled through a central radio-service department—about 100 Service Men are employed.

The Plan

In order to start the plan, a talk was given to the Service Men assembled at a special meeting. Three things were impressed upon the men. First, the need for automatic line-voltage control was illustrated and emphasized. Second, the men were shown the ease with which a sale could be made; and third, they were offered a cash incentive. Prizes were posted for the best monthly sales. Service Men averaged from $50.00 to $75.00 per month extra—that is, above their regular salaries.

Sales Data

During the month of January, 125 automatic voltage regulators were sold by the Davega Service Men. In February, the number of such sales was increased to 195.

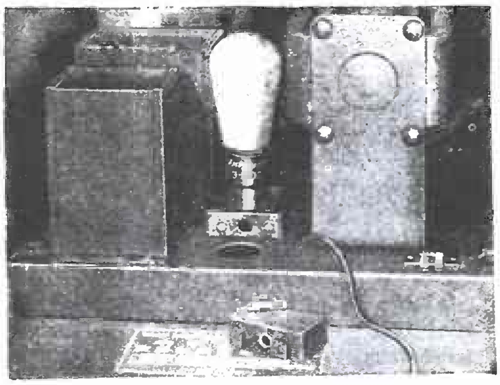

How RCA Victor adds line-voltage controls to its sets. The ease of installation is well illustrated in the sketch below.

During this initial period, the Service Men were gradually becoming aware of the possibilities of the plan. Then, in March, the sales jumped to 1129, in April to 1578, and in May to 1705 and since then, these service-sales have been continuing at a most satisfactory level. The chart in Fig. 1 gives a comprehensive idea of the way in which the Davega Service Men benefited by the new merchandising plan. As a further aid to the Service Man, a pamphlet was given by Davega, to each purchaser of a radio set, calling attention to the troubles arising from line-voltage fluctuations and to the fact that such variations in voltage occur quite often in the metropolitan area. The customer was advised that a Service Man would be pleased to render a voltage analysis and then to install a voltage regulator if necessary. A return post-card was included in the pamphlet.

This promotional work resulted in a further increase in voltage-regulator sales. In addition, the manufacturer of the line-voltage control conducted a direct-mail campaign to give the Service Men timely pointers on selling regulators and also maintained a newspaper publicity and advertising schedule to create public demand for automatic voltage-regulation.

The results obtained by the Davega Service Men have been equalled by many other progressive service organizations in various parts of the country. Any radio concern interested in obtaining additional information regarding the above-described plan may obtain this gratis by writing to the editors

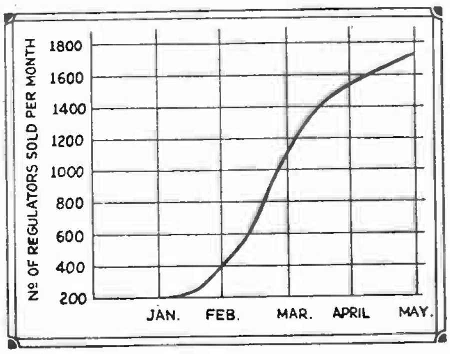

Fig. 1

A chart showing the sales of voltage controls for the months of January, February, March, April and May.

Money Making Suggestions

Servicing in the Country

THE situation that presents itself, as far as radio is concerned, in the country—that is to say in small towns and hamlets and on the farms—is not new; and the observations which I make here are only to emphasize the crying need in these small communities for radio sets adapted to their needs.

While radio was young, and even until nearly five years ago, there was no such thing as an A.C. receiver. Set builders, as well as set manufacturers, competed with each other in turning out increasingly efficient battery-operated receivers; since there were no others to be had. These sets at that time were, of course, suitable for the country; and the type still is an ideal, for the simple reason that in the more isolated homes of the country there is usually no electric light and whatever radio sets there are must, of necessity, be operated by battery power.

During the last few years, this market, which is a tremendous one, has been almost entirely overlooked by most radio set manufacturers; only very recently have some of the larger concerns come to their senses and realized the big opportunity they have missed in the past two years. They are now trying to make up for lost time.

As far as the Service Man and radiotrician, as well as the set builder, are concerned, there is still a good deal of money to be made by installing either factory-made sets or sets built to order. In many communities, for instance, there are numerous 32-volt lighting systems; yet there are practically no manufactured sets in the market that can be hooked up to such a lighting circuit. The wide-awake Service Man and radiotrician will take advantage of this fact, find out where such lighting plants are located and then try selling special sets to this trade. Since sets to operate on 32 volts are rare, they naturally will bring a pretty good price; which should make it worthwhile for the industrious constructor who wishes to earn a few dollars. We know of one man who, in a single season, has sold not less than sixty such sets at a price that would usually be thought of as being exorbitant; but this custom builder cashed in on a real demand by making up a set, and taking it around to farms, hooking it up and demonstrating it, and he found little trouble in getting an order each time. This usually brought new business in the neighborhood, from other isolated farm groups which had similar lighting equipment; and the builder in question was kept busy installing such sets.

Of course, it is not absolutely necessary to have the farm radio set work on 32 volts; because an ordinary battery set can be operated from a storage battery which can be "floated on the line." This presents no difficulty to the radio man and does away with the special set.

There are two avenues open to installing sets of this kind. One, and of course the better way, is to sell an up-to-date set to the farmer or small-town man; there are some excellent receivers of this type on the market today. Or, if the radio man is a builder himself, he can make up a screen-grid set with three or four tubes which, with their tremendous amplification, will perform surprisingly well in practically any locality. Incidentally, there is always the additional sale of the antenna equipment, loud speaker, tubes, batteries, etc. And, once you have the confidence of your customer, he will stick by you and you will be engaged to service the set for a long time to come. Then, later on, when a better set comes along, you will be able to sell it to the same customer. The business, therefore, is cumulative as time goes on.

The Service Man or custom builder who owns his car, and can get around easily, will have little trouble in drumming up a good deal of trade in this manner.

Of course, it is important that one or more demonstration sets be carried along; because to the small-town man or farmer a demonstration is everything. Selling from a catalogue or description means nothing because, incredible as this may sound, thousands of individuals in this country have as yet never listened to a radio set. Such individuals are always hard to convince, if only a description of a set with its picture can be shown. An actual demonstration is a different story, and usually a sale can be made on the spot.

I have mentioned before, and I wish to repeat it, that there is a particularly lucrative market for such sets in summer communities; and, once you get to such a summer community, it will be found that there are, not far away, many isolated dwellings which can be canvassed. Nine times out of ten, a dwelling or farmhouse that has no visible aerial should prove an excellent prospect. While, of course, not everyone will be sold, still it will be found that the percentage of sales runs high.

A thing to remember—and many of our correspondents who have had such experiences point this out— is that eight out of ten of such sets sold must be reasonably-priced. The small-town man, as well as the average farmer, is not blessed with too much money, and in many cases $50.00 is the limit that can be gotten for an installation. Of course, for such an amount it is impossible to furnish a really first-class set. In such a case, a second-hand battery set which has been overhauled and repaired will have to be sold to the customer; but even here a very good profit can be made if the radio man knows his business.

Another thing the radio man will come up against, is that many individuals wish to buy a set on the installment plan; in this case, it is usually best to sell a reconstructed set. Such receivers can be bought quite reasonably and, in nine cases out of ten, the first down-payment will practically repay the investment, while the installments will be so much profit. A little money invested here will show good returns and, if a few dozen installments are made, the industrious Service Man will have quite a little money coming to him when he will need it most. Incidentally, it might be said that few of these sales ever go bad; for the average small-town man and farmer is honest and pays his just debts on the dot. If the radio man has a banking connection, and if he can obtain written orders for the installations, it should not be impossible to obtain from the bank a sufficient amount to keep on going until all the installments are paid. Most any small-town bank, if it knows with whom it is dealing, is in a position to finance small loans of this kind; and, if the radio man has a good reputation and is known to the bank, he should be able to obtain accommodation.

Radio Service Replacements

OBSERVERS of economics have often been struck by the fact, and have frequently pointed out, that the radio business in many ways has paralleled the automobile business. There is an excellent chance that this truism will continue in the future almost indefinitely, and that the parallel will even be closer than it is today.

It has been possible for a long time, in the automobile industry, to buy replacement parts of almost any description, for practically all cars. By this statement, it is not meant that the parts supplied must originate from the company which originally built the car. In the automobile industry, just as in the radio industry, there are a good many so-called "orphans"; that is to say, cars which continue on the road for many years after the companies that originally made them went out of business.

Then we also have the condition that automobile manufacturers change their models almost every year and, if you wish to get a part several years afterwards for a discontinued model, there is a good chance that the company no longer carries such parts.

Soon after the advent of the automobile, there sprang into being numerous firms which made it their business to supply almost any part for any car; and quite a sizable replacement industry has been built up, during the course of the past twenty years, in this particular field.

A similar development has now occurred in radio, where a sizable industry, which might be called the Service Replacement Industry, has come to life during the past two years; and this business, by the way, is advancing rapidly.

Particularly in the radio field, we have reached the point where a tremendous number of "orphan" radio sets are scattered all over the country. The original radio set manufacturers have gone out of business, and it would be today quite impossible to service such sets efficiently if it were not for the replacement industry.

Thanks to the latter, it is now possible to buy almost any important replacement parts (such as volume controls, voltage dividers, condenser blocks, filters, transformers, etc.), all of which have been designed to take the place of similar items, exactly as they were put out originally by the set manufacturer. Not only have these parts the exact electrical characteristics, but, in practically all cases, the exact physical size and shape is followed by the replacement industry. And it may be said, in passing, that most of the replacement parts sold nowadays are superior to the original article. The reason for this is obvious: when a set manufacturer contracts for ten or fifty thousand condenser blocks or power transformers, the saving of one or two cents on each becomes quite an item. And, for that reason, in the past quality has often been sacrificed for quantity; with the inevitable result that certain parts, such as condenser blocks and transformers, give out first in such sets. The Service Man who replaces a part must be assured that the components which he buys are first-class and will not bring him to grief in a short time after he has installed them. Therefore, a matter of five or ten cents is not of consequence to him, and he is willing to pay a fair price if he gets a quality article. This is just what the radio service replacement industry supplies him today.

Of course, the big set manufacturers supply the Service Man with replacement parts for their standard sets; they have been doing so right along and probably will continue doing so indefinitely. The trouble with some of the large set manufacturers today, however, is that, because of some curious mental twist, they do not recognize the independent Service Man, and consider him as an interloper into their business.

It is true that, perhaps two years ago, many radio Service Men were little better than set butchers; but this condition has long passed, and the Service Man of today performs a most important economic function in the scheme of the radio industry.

Nevertheless, some of the largest set manufacturers still refuse to recognize independent Service Men, and offer as their excuse that "we employ our own men who are better trained to take care of servicing our sets." This assertion may be taken with a huge dose of salt. It is true that, in the more important centers, the big set manufacturer takes care of his sets directly; but, where his sets are in use in smaller communities and at considerable distances from the large cities, such a situation does not obtain. It is hardly possible that there is a single set manufacturer in the country who can service each and every one of his sets, no matter where it it located.

So we have the curious result, that the Service Man cannot buy replacements for certain well-known sets from the set manufacturer; and he must fall back (fortunately for him—and for the set manufacturer, too) on the replacement industry. It is fortunate for the set manufacturer, because his set gets servicing in spite of him; the customer is satisfied while the Service Man makes a legitimate profit.

Modernizing Electric Sets

SINCE the advent of the electric set in 1927, approximately 15,000,000 of such sets have been produced.

Of these, 10,000,000 may be said to be antiquated because they operate with old-fashioned equipment, and are still utilizing the magnetic type of speaker instead of the modern dynamic type.

The old sets have no tone control, and as a rule compared to a modern receiver, they have little power, or as it is said in the vernacular, they have "no pep."

Yet, millions of such sets are in use every day for various reasons. One reason, perhaps the main one, is the present economic depression; the owners have a real investment in their sets, (having bought them when high prices prevailed, at an average of over $100.00 apiece) and are, therefore, loth to throw out the set which, after all, still gives some service.

Another reason is that some of the sets of the vintage of 1928-29 were housed in very expensive cabinets; the latter often representing more than 50% of the total cost. The cabinet that now houses an antiquated radio is a piece of furniture that the owners are not willing to discard immediately, and for that reason they put up with the admitted deficiencies of the old radio.

Although these are excellent reasons, they should not deter the aggressive Service Man from selling efforts, because they open up a hitherto-untapped gold mine.

It probably has not entered into the head of the present owners, of these antiquated sets, that these may be modernized and brought up to date for a very modest sum of money. The changeover of such sets to dynamic speakers, pentodes, variable-mu tubes, etc., is not a difficult one; and it enables the Service Man to reap a real harvest, if he only knows how to go about it.

If the Service Man who has serviced such sets in the past knows what he is about, the situation reveals itself as one of comparative simplicity. All he needs to do is to call the attention of the owner to it by personal visit, telephone or letter, telling him that his set is now woefully antiquated, and that it needs to be brought up to date. If you once get "under the skin" of the owner, and make him realize that he has an antiquated radio set (which may be compared to a Model "T" Ford car) the owner will usually be persuaded to consider the proposition of having the set modernized.

Of course, the owners of fine cabinets, nine times out of ten, fail to realize that a changeover will not mar or affect the appearance of their prized cabinets, and this point should be pressed with due emphasis.

Naturally, no two cases will ever be exactly the same, so it is possible only to give general advice on the subject; but, as a rule, it has been found in practice that a little salesmanship properly applied works wonders with the average set owner.

Most important, however, from the standpoint of the Service Man, is the fact that once the job has been done, it will be found that the owner's attitude towards the set has entirely changed. The improvement has, so to speak, put new life into him, speaking from a radio standpoint. He will use the set more; he will be more likely to show it to his friends, because he can again feel proud of the set, just as when it was new. It can, indeed, be described by him as an "up-to-date set," because that is exactly what it is.

Just as an operation has made a new man out of many an invalid, so a "set operation" makes a new receiver out of an antiquated "wheezer," and will be a source of more business for the Service Man. Once the set owner has been shown that a Service Man has done him a real turn, he will call the same Service Man in again when the need comes, either for servicing or if he finally decides to buy a new set. And we know of many cases where Service Men have closed a number of nice set sales in this way.

Practically every set owner has use for more than one speaker. Whether he lives in an apartment or in a house, the case remains the same. As a rule, the radio set will be found in the living room. What about the dining room? What about the childrens' room? What about the bedrooms?

If the owner can be convinced that, for a moderate sum of money, speakers can be installed all over the house, with switches and volume controls so that they may be turned off and on at all outlets; many attractive sales can thus be made. We know of a number of Service Men who have worked this as a specialty, and found it exceedingly profitable; particularly in suburban or country houses, where the need of extra speakers is acute.

Of course, in this instance too, an old set operates poorly, because more power is required to supply a number of speakers. The extra speaker, as a rule, need not be a dynamic; it may be of the magnetic type, as the wiring is simpler and the power demand less. With the coming of the summer, loudspeaker installations on summer porches is a worth-while undertaking for Service Men who complain of poor business.

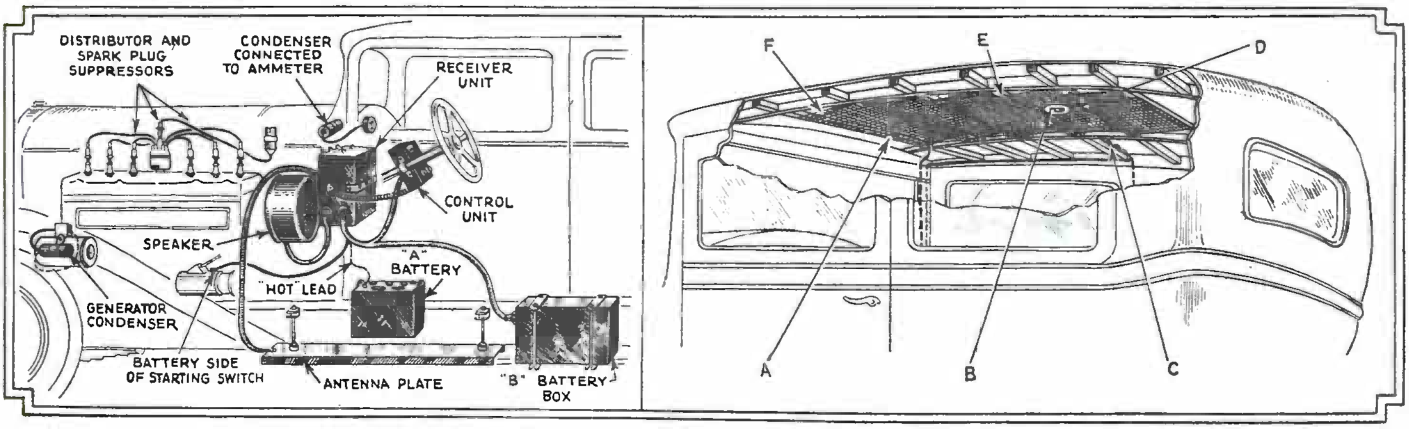

At the left is shown a typical car installation and at the right is shown a typical car antenna. At A are shown stagger tacks to permit listings on head lining, to be tacked over screen; at B, dome-light; at C. dome-light wiring; at D, a hole which is cut to clear the dome-light—the edges of the screen are soldered; at E, the antenna screen—use bright copper or bronze wire only; at F, edges of screen—they must be soldered.

CASH *in Automotive Radio*

Here's an analysis of a new field, right at your backdoor, where the grazing is very good now, and will get better as summer comes.

JUST a few short years ago, a meeting of important radio manufacturers was called in New York City to consider the possibilities of making a profit from the sale of automobile radio receivers and accessories. That was before Crosley and National and Atwater Kent had given the subject any more than the most casual consideration. It was before Transitone was taken over by Philco and before the R.C.A., or any of the tube manufacturers, gave any consideration to the manufacture of special tubes, batteries, cables and the like, for automobile-receiver use. There was a live interest shown at that meeting; but there were plenty of misgivings, as there always are when anything off the beaten track of radio merchandising is up for consideration.

But the purpose of this article is not so much to review auto-radio's history as it is to indicate that there is a market for receivers of this nature right at this minute. It is increasing by leaps and bounds, and it is bringing an entirely new field of effort and profit into existence for the Service Man. Before you read another paragraph, may I suggest that you give the idea a bit of thought from this point of view.

Regardless of the size of your town, I'll wager that there are at least three automobile dealers in it. In all likelihood, two of them are kicking about business being poor, and they are the two who are doing nothing about it other than waiting for something to happen and for things to take a turn for the better. Have any of them ever thought of the idea of giving a good auto radio with every car? Did you ever talk this over with them? Business is to be had—plenty of it—if you will use your head for something in addition to making a satisfactory resting place for your hat. You may be interested to know what other fellows are doing along this very line. It may give you a hunch or two and enable you to rake in a lot of the loose "shekels" which are just waiting around for you. Furthermore, if you handle the job properly, it can be made of great advertising value to your regular service business.

Service Systematized

Unlike the ordinary type of radio business, auto-radio servicing does not begin after the receiver has been in operation some time and begins to require attention. Auto-radio service begins when the dealer makes the sale. The installation of an auto-radio receiver is no mean job. It is usually different for every make of car as well as for every different model of every make. It is not easy, except for the Service Man who specializes in it. For the man who does, there is a virgin field with much more than the ordinary amount of profit waiting.

Just think this over: At the last radio show in New York, the Chief Engineer of a very large company told me that his company made and sold about five thousand auto receivers this year—not counting short-wave receivers sold to various police departments—and the company is now working on a production schedule of five thousand a *week!* Even supposing it did not carry on that type of production for a long while, it is an indication of the business already at hand. When the meeting of manufacturers was held in New York there were only five makers of auto-radio receivers. Now there are more than sixty. At that time, there were no makers of special tubes for auto-radio use. Now there is not a single tube maker of any importance who does not include these tubes in his line. There were, at that time, practically no batteries made especially for this service, and the ordinary type of storage battery did not give a very suitable account of itself when the drain of several tubes was added to the drain caused by the starter and so forth. Nor did the "B" batteries, designed to sit quietly in some place or other until they were exhausted, perform too well when they were bounced over hundreds of miles of rough roads.

There arose a howl for service—and a new kind of service—which required a very fair knowledge of automobiles and their engines. Automobile companies were not too slow to realize the importance of auto radio—after some of them went so far as to suggest that the radio would be a menace to driving, only to have it proven to them that they were cutting off their noses to spite their faces. Then the manufacturers of receivers and tubes began to wake up to the fact that here was a market which they had been ignoring. Then some of them went into it blindfolded. Sales managers saw millions of dollars in it and sold the idea to their directors; and printers' ink and radio-advertising time were devoted to this new venture with more than ordinary prodigality. Then the kittens came home to the mama cat. There was weeping and gnashing of teeth. This was not true of all the auto-radio manufacturers, but there were very few exceptions.

Then it became recognized that systematized service was an absolute necessity, if auto radio was to give the customer satisfaction. And there are still a few receiver manufacturers who hold the opinion that it is good business to deliver a customer at least a portion of the claims made for their products. Where were the Service Men who could save the day for them? They were few and very, very hard to find; in most instances they have not been able to find half enough of them. In the final analysis, no auto-radio receiver will stay sold unless it is properly installed and properly watched by the Service Man. The regular Service Man can learn to handle the job but, in most instances, he has failed to do so.

How much do you know about the requirements for installing any type of auto radio on a Buick Eight, 1932, five-passenger sedan, for instance? Do you know the difference in the performance of the same receiver when properly installed in a Ford De Luxe Phaeton? I'll bet that more than eighty-five percent of the men who read this article couldn't answer those two questions satisfactorily. But that only emphasizes the opportunity there is for you.

Several of the leading manufacturers have gone about the installation and service job in a systematic manner and the results have been very gratifying. For instance, Philco, the maker of Transitone Radio, has made an arrangement with suitable auto-battery and ignition-service stations all over the world, which assures them the proper type of installation and upkeep at a modest charge to the purchaser. The same thing is true of Crosley and one or two others. In some instances, these manufacturers have made arrangements with organizations of national or even international proportions, but in others they find it advisable to utilize the services of a local specialist. It is this phase of the situation which should be so very profitable to the man who is already recognized in his neighborhood as a radio Service Man of more than ordinary ability.

A Premium for Service

In New York City, and the same thing is true in other places to a proportionate degree, several of the large department stores offer auto radios for sale at regular intervals. Instead of permitting the customer to have his pet "expert" make the installation, the store sets a flat figure for the installation charge, or includes it in the price of the receiver, and insists upon having it installed in one of the several authorized service stations with which it has working arrangements. In this way, the customer is well protected; and there is an increasing amount of this business being turned over to the service stations which have had the foresight to make a thorough investigation of the special requirements which this type of installation demands. There is still plenty of room, at the top. Even though there may be a very satisfactory station in your town (and investigation among the manufacturers indicates that this is not likely to be true), there are always reasons for the establishing of competition.

A radio installation on a good car should bring the service organization at least ten dollars, when it is done on a contract basis for the radio or automobile dealer. It should bring more, if it is a single job being handled for an individual. Do you happen to know of any other service job which is brought right into your shop, which brings you that much money? There are exceptions, of course, but at least ten "bucks" a throw is a pretty fair average. And no consideration has been given to the repeat business which is becoming less and less in connection with ordinary receivers.

"B" batteries are still fairly high in price, and there is almost as much profit in a set of them as there is in the sale of a complete midget receiver and a set of tubes to go with it. Then, too, you know that the batteries are not going to last as long as the midget. Give your auto-radio customer the proper kind of attention, and you will be amazed at the rapidity with which you will be developing business which should be yours and which has been slipping through your fingers. The manufacturers want you, the sales organizations want you, and the customer certainly wants you. And all three are willing to be more than ordinarily liberal.

A Few Examples

You may want some concrete examples of just how all this can be made to fit into your business. All I can do is let you in on the backstage operations of several service organizations which are typical. From them you will have to draw your own conclusions.

In a western city, a young friend of mine was in the employ of a large radio dealer. He ran the service department and his salary was fifteen dollars a week. When radio was on the increase, the dealer was doing a "land-office" business and was making a pile of money. Then things began to happen; several cut-rate stores opened up on the same block. The dealer would not cut his prices, nor would he utilize some of the sales devices which are now generally recognized as necessary to meet competition. He said, he would go broke before he would cut the prices of his high-class lines. He did; I mean he went broke. My young friend was out of a job. He tried sending out post cards to the clientele of the store, letting it be known that he would service receivers for the store's old customers. For some reason or other, the idea did not "click" and the business he was getting was not enough to meet his modest demands for a livelihood.

Then he went to a company which specialized in auto-ignition and battery repairs. He told the manager that he wanted a job where he could learn about ignition systems. He got the job, with very little pay. He let it be known that he was able to take care of the installation and servicing of auto-radio receivers. The result was a deal between the proprietor and himself, where he was to get a commission on all the jobs of that nature which the ignition station would take care of. Some small ads were placed in the local papers and it was not long before the man who was taken on to learn the ignition business was the manager of the radio department. Within a short time, the representative of one of the radio manufacturers visited the station and arranged a contract which brought all the installation and service work from three large stores right into the ignition shop, and it became necessary to put on additional Service Men and take more space. Now this company is doing a fine bit of work and has been able to make special arrangements with a local automobile upholsterer who takes care of the antenna installation. By this method, the inside roof is taken off, the antenna wires put in place and the covering replaced without the antenna being visible; and the job is so well done that there is no appearance of the covering having been removed.

There is a great deal of conjecture about this sort of thing and there is but one real way to get at the facts and that is to get right into the job. There is no branch of service work which is so highly specialized and in which there are so many loopholes. For instance, a great many auto manufacturers are now advertising provisions for radio. You would imagine—and a great many dealers have been fooled, from the manner in which they tell their story—that all you have to do is to get any auto-radio receiver and that the car has been made ready to drop the receiver in. It is not as easy as that, not by a deuce of a shot. Experience with quite a number of such cars indicates that, in many instances, it is necessary to cut the top of the car open, take the so-called aerial out altogether and put a new one in. In other instances, the wire netting which is used comes so close to the metal sides of the body that the pickup is terrible. In further instances, it has been found that some of this wire is actually short-circuited to some part of the body frame.

Easy When You Know How

In this business, just like all others, the fellow who knows what he is about can be away in the lead; while the fellow who undertakes auto-radio installation and service without knowing his "book" is likely to lose a lot of time and money, to say nothing of the confidence, of his patrons. But the bright spot in the whole picture is the fact that this is the time to get on the job and find out what it is all about. If you don't think this is true, just drop around to some of the service stations in your neighborhood and ask a few questions about the installation of these receivers. You will find that in nearly every case, there is little or no system and that the installation is put in on a "cut and try" basis. Here's what can happen when you know what it's all about.

I was in a shop, on Long Island, where they specialize on auto-radio installations. The one in my own car needed a new set of batteries and they were being supplied. A lady drove in and said that she was having trouble with her receiver. It did not seem to get the distance she thought it should. A few questions brought out information to the effect that local stations came in beautifully, but just as soon as she turned the volume control up high enough to get the distant stations—she could get many of them if she did not have the motor running—the stations seemed to fade out and there was a continuous roar in the loud-speaker The Service Man lifted the hood and made a few passes over the generator. A few minutes later he had installed nothing more than a single fixed condenser. The whole operation took less than five minutes and the "special" ignition condenser brought a dollar and a half. If the same sort of condenser had been dropped into an ordinary receiver, it would have brought one third that amount. Furthermore, the lady got a bargain.

It transpired during a chat that I had with her afterward, that she had taken her car to a number of places and had paid quite a little, at each of them, for the assurance that "there would be no more trouble now," only to find that nothing much had been accomplished. A radio dealer, some few miles from the shop in question, had told her of the service station where I met her and she had driven past more than a hundred similar stations on her way to the Long Island place. The receiver she had was a very good one. The mechanical installation was excellent and nearly every other detail was satisfactory, but the receiver was not doing its stuff. What was needed was a working knowledge of the solution of ignition problems.

Business Building

While I was at the station, three other cars came in and there was a total of more than fifteen dollars' worth of business in considerably less than half an hour. It was all happening in a shop where just one man was doing this particular work and he told me that they were not always so busy, but he counted that day as poor when he did not take in seventy-five dollars. He also told me that he had a very good idea of his operating costs and, from his figures, it was easy to see that he was making a profit of more than thirty dollars after all his expenses had been paid. And all his business was on a cash basis, with one exception. The exception was one of the best auto dealers in the territory who had taken on a line of auto-radio receivers *which he was having installed in all the cars which were traded in for new cars,* as well as making sales of receivers with the new ones. *By installing the receivers in the old cars, he was able to get a much better price for them and was able to get a great deal of publicity which would not have been possible otherwise.*

FIXING THE RCA VICTOR 52

THE R.C.A.-Victor receiver uses a pilot light which requires 110 volts on the filament. The writer wishing to replace this bulb, found the only lamp available was of the large standard-base type which would not fit into the light socket in the receiver. However, by breaking out the old bulb and its cement, it was possible to fasten the new base in the old one

Again, while attending a fight, for some unknown reason the large 250-watt bulb lighting the ring burned out, and the writer offered to tackle the job of fixing it.

At my suggestion, the management obtained a replacement bulb for me and upon examining it, I found that it was only rated at 150 watts, and that its standard base would not fit the large mogul socket of the big 250 watt bulb. However, it only required a few minutes to break the glass and cement from the old lamp, screw the standard base into the mogul base and replace it in the socket.

Salvage Values in Old Radio Sets

Receivers of standard makes, in perfect working order, are nowadays cheaper than their component parts. A few hints as to their utilization are contained in this article.

RADIO parts and sets which are no longer the "last word" can be obtained quite cheaply, and are valuable for many different purposes; among which is replacement in some types of sets. These parts are obtained easily in a variety of ways and often at a surprisingly small cost. Old regenerative receiving sets, which can be purchased for a comparative "song," when slightly modified, are useful as service oscillators. Old sets of other types, after slight adjustments have been made, can easily be sold to some types of customers. D. C. sets, when made over into A.C. models, sell easily, and at a good profit. Methods of obtaining old parts and sets, and the uses to which they can be adapted, will be described.

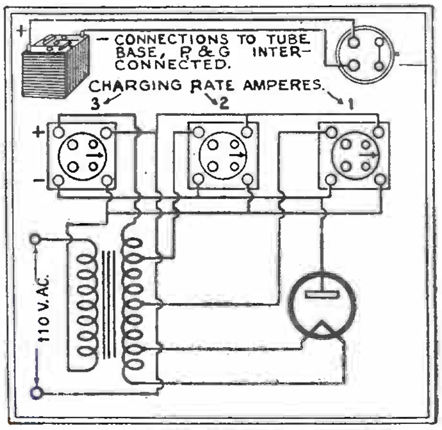

Fig. 1

The method of connecting a battery charger, shown here, gives flexibility in operation to meet varying demands.

There are, and always will be, radio owners who cannot afford the best in radio entertainment, and must use sets which are not as good as their more expensive A.C. counterparts. These set-owners are content with the usual quality and, often, with the use of batteries for plate supply; since the initial cost is less.

On the other hand, there are set-owners who must have the very best, and are constantly buying new models and discarding the old ones, although these are still in good shape. Moreover, it is usually the Service Man who advises the owner that better results can be obtained with a later model, and is thus in a position to offer the owner a price for the old set. Any set owner realizes that an out-of-date set which must be resold is not worth much, and will be content with a small allowance. If the Service Man sells new sets on the side, it is his part to install such a new set. Often it will be to his advantage to make a rather liberal allowance on an old model, in order to induce the prospective buyer to buy a new receiver. Any small amount, offered in excess of what the set would normally be worth, is easily absorbed in the profit made on the new set.

Market for Old Sets

If a D.C. set is received in a deal, or purchase, the Service Man can give it the "once over" and resell it to some listener at a reasonable cost. By using adapters, such a set can be equipped for '99 tubes so that a large storage battery is unnecessary. With all the batteries in the cabinet, the old set is more salable. Some listeners do not care particularly for extremely good quality; for example, college students away from home will often buy a cheap set simply to listen to boxing returns or football games in their own private room, or at the fraternity house. They do not expect an exceptional set for a small price, and are content to receive these sporting returns for the few months which they spend away from home.

Service Oscillator

Old D.C. models, if regenerative, can be used for servicing. For example, one of the small Crosley regenerative sets can be set up in the laboratory to function as a heterodyne wavemeter or for any of the many purposes which an oscillator serves. A small "B" unit eliminator which someone has discarded, because it no longer supplies sufficient current for a late model set, can be used to supply the plate voltage.

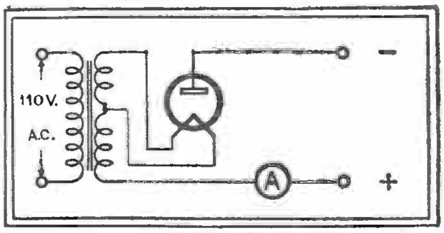

Fig. 2

Here is a very simple rectifier circuit which will be useful for various shop purposes, as well as for charging.

There are also many kinds of parts which can be obtained for practically nothing. UV sockets will serve many purposes; although they do not look as well, they will "take" the UX tubes, and can be used in experimental hookups of various kinds. These sockets usually have good binding posts; if such a socket is mounted where power connections are required (for example in a battery charger; see Fig. 1), connections can be made in any desired order around these posts.

A Handy Charger Set-Up

In Fig. 1 is shown a very good use for some old sockets, and a tube base. The rate at which the charger charges, depends upon the transformer voltage; so various taps can be used for the different charging rates desired. By making connections to the sockets and connecting the tube-base as shown at the top it is possible to supply three or more charging rates by simply plugging into the proper socket. The grid and plate terminals on the tube-base are shorted. When inserted into either of the sockets this plug serves to close one of the 110-volt leads connecting with the primary; thus turning the charger "on." Obviously, the price of a switch is also saved. One of the filament terminals on each of the sockets connects with the plate; the other filament terminal connecting to the various taps supplying the different transformer voltages. This system has been used with a "dry" type charging unit; but it will also work with a Tungar bulb, or other system.

Since battery chargers are very useful to the Service Man and can easily be constructed, one will be briefly described below. A simple rectifier constructed at a small initial cost is useful for the experimenter as well as the Service Man.

A Tungar rectifier is easily assembled. It consists of a two-electrode tube, or equivalent "dry" unit, and a step-down transformer. The circuit is shown in Fig. 2.

Construction of a Transformer

The core, which measures 8 by 5 inches, outside, has a cross-section 1½ inches square, consisting of .016-in. silicon laminated steel. About 300 pieces are necessary. One can often secure an old core of the proper size, and the iron need not then be cut. If a right-angle box is constructed, with 8 in. inside measurement, one leg of the core may be built up by placing one strip first to the right, then another to the left. When compressed, the core should measure 1½ inches thick; it should be squeezed in a vise and bound with tape. The other leg is built up in a similar way.

The primary winding consists of 400 turns of No. 18 D.C.C. wire, and should be wound on a slightly-tapered form to facilitate removal. Small, square pieces of wood should be fastened at each end of the form and a couple of wires laid lengthwise. Tape the primary, longitudinally.

The secondary winding consists of 100 turns of No. 14 wire, and this should be wound on the same form. A tap is taken off for the filament voltage at the tenth turn. If the windings are soaked in hot paraffin there will be less chance that the

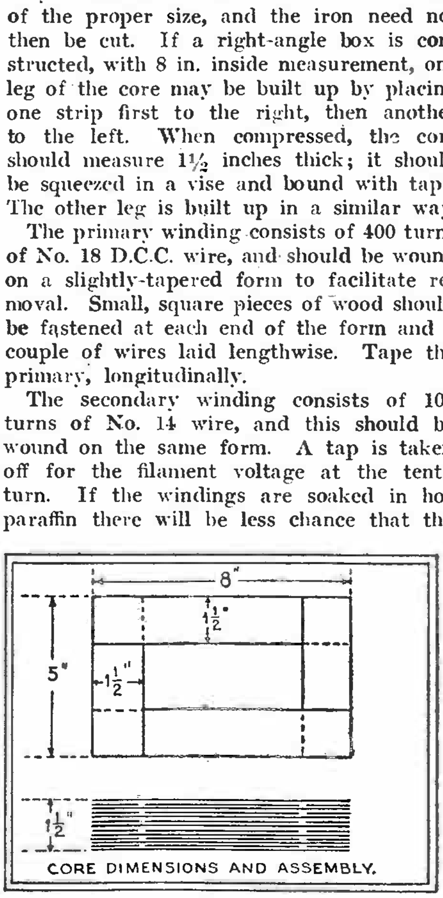

Fig. 3

The design of a transformer for use with a charger, as in Fig. 2, or any other purpose which may suggest itself to the radio worker.

wire will char in the event of excessive current. Small pieces of doweling between layers will allow plenty of air circulation, if desired, in some experimental arrangement. Fuses should be provided in the 100-volt leads, for safety. If a 5-amp. charger is desired, use No. 12 wire on the secondary instead of No. 14, which is for a 2-amp. outfit. The tube becomes quite hot, so that a porcelain socket (an ordinary porcelain lamp socket will do) is necessary. The elements of the tube will redden, but this is normal. The windings will run quite warm, but ordinary currents should not damage then. The ammeter must be properly connected, so that it will read in the proper direction. If the socket arrangement described is used, the transformer should have two additional taps. These will be left to the experimenter to work out for himself for the particular charging rates desired. The wire can be scraped slightly, at a given position on the winding, connection made, and the charging rate, when connected to a battery, measured. This is repeated until the desired rate is obtained.

To assemble, slide a core leg through each winding and then fit in smaller lengths of laminations at the ends to complete the core. The method of assembly is shown in Fig. 3. If the coils are placed on opposite legs, keep them close together for better efficiency. The end laminations are, therefore, shorter. The core is securely held together, and prevented from humming, by pieces of strap iron securely bolted to the core. These straps are slightly longer than the laminations and are bolted over the ends. The entire equipment can be mounted on a small slate panel if desired. The tube should be covered over, as it gives a very disagreeable, and strong, light; and the ammeter (such as a Ford ammeter; accuracy is not so essential here), is placed where it can be easily read. An ordinary clip makes contact with the plate of the tube.

An interesting stunt can be tried with a burnt-out Tungar bulb. A spark coil is connected with the open filament and a spark allowed to pass inside the tube. If the filament can be made to glow, the charging current will start, and the charger will operate with a burnt-out tube! The spark-coil should then be disconnected. This is a very interesting experiment, its success depending upon how badly the filament is blown out.

Modernizing the Old Sets

AN ADDED A.F. STAGE FOR D.C. SETS

RECENTLY a certain dealer called the writer to service an R.C.A. "Model 18" D.C. set combined with a mechanical phonograph.

Upon arrival I found the connections to the external 22½-volt "C" battery disconnected and, instead of '12A tubes throughout and a '71A in the last audio, two '01A tubes were found in the R.F. and a '71A in the first and second audio. The instrument functioned as well as possible after the proper tubes were inserted in the respective sockets; but it still lacked real "pep."

After the job had reached this stage, the customer asked whether there was any way possible to bring the set up-to-date by using a dynamic speaker and an electric phono pickup. Before answering this question I took into consideration the fact that this man had a critical ear for music and would no doubt be hard to please.

The following day I purchased a Peerless D.C. 7-inch dynamic speaker and a Gordon pickup with volume control combined, with the necessary hardware; which included a S.P.S.T. switch to be used as a transfer switch.

After installing the speaker and pickup in the cabinet, I encountered the most difficult feature of the job. When I had the switch and the pickup into the circuit and disconnected the output transformer from the set to use the output transformer of the dynamic speaker, I found the set did not have enough "kick." Also (which was worse, in this case), the pickup was barely audible.

It was finally decided to make up a separate audio amplifier comprising two type '45 tubes in push-pull. The schematic circuit followed in building this amplifier is given in Fig. 1.

Two type '45 tubes, filaments in series, consume 1.5 amps. at five volts. A seventy-ohm resistor would supply this current; but it was more convenient to use a 100-watt and a 75-watt Mazda lamp in parallel. These are cheaper and more conveniently replaceable than the usual resistor used here.

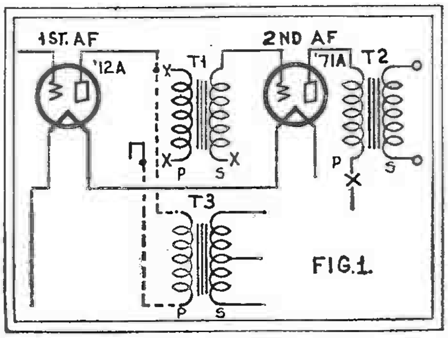

Fig. 1A

The internal changes shown above must be made on the Radiola "18" ("33," "51") to add the external power stage shown above.

After the amplifier was constructed and tested, it was found that the filaments of the '45 were getting 2.35 volts each. This value is preferable; for the reason that excessive voltage will burn out the filaments readily and it is better to be on the safe side. The difference is hardly detectable by ear.

Changing Over the Chassis

Although the amplifier is adaptable to any type of D.C. radio set, there must be variations in different installations. In Radiolas 18, 33, and 51, it is necessary to make the changes indicated at X in Fig. 1A.

First, unsolder the lead to the plate of the first A.F. tube socket and the "B+" wire going to the primary, from the second audio transformer T1. Tape these ends and put them out of the way. Now, in their place solder a pair of wires (twisted) about two feet in length (or more, depending on the distance of the amplifier from the set) and connect them to the two binding posts leading to the primary of the input transformer T3 (as shown in dotted lines).

Next, cut the grid return of the same unit (T1) and tape it; this also applies to the "B+" lead to the primary of output transformer T2. This completes alterations on the chassis. The power box remains intact. Do not touch the filament wires of the '71A tube socket or take the tube out (for the tubes of these sets are wired in series); do not short it, as that would increase the voltage applied to the remaining tubes.

To those who wish to take the '71A tube completely out, however, it may be pointed out that this can be done after soldering a wire-wound resistor of about 20 ohms across the "F" terminals of that socket.

The layout followed in constructing this particular amplifier is shown in Fig. 2.

List of Parts

One 150-turn honeycomb coil (for filtering);
One audio filter choke (made by winding about ½ lb. No. 18 D.C.C. wire on an old transformer core);
Two ¼-meg. leaks, Tobe;
One .0005-mf. fixed condenser, Dubilier;
Two Benjamin UX sockets;
Two porcelain screw-base lamp sockets;
One Amertran push-pull A.F. input transformer, T3;
One electric outlet;
Two fuse receptacles and 10 amp. fuses;
Five binding posts;
One 2-mf. Tobe by-pass condenser.

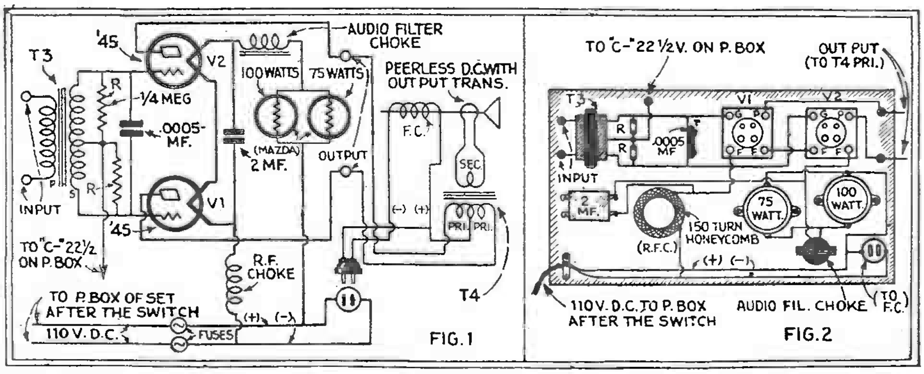

FIG. 1

FIG. 2

In order to use more effectively the limited plate voltage, this system replaces the '71A output stage of a D.C. Radiola with push-pull '45s, externally. The layout is shown at the right.

IMPROVING THE RADIOLA "SUPER"

AN "AR-812" Radiola Superheterodyne may be sufficiently modernized to operate a dynamic speaker by adding a '71A power stage, a "B" power unit, and a 6-volt storage battery. The changing of the first tube to a '12A is optional, but the improvement in volume and quality warrants it. The internal circuit of the AR-812 within the catacomb is as Data Sheet No. 16, with the exception that V6 is a '20 output tube. The external connections to the bakelite connecting strip on the catacomb are somewhat different.

If we are to use a '12A as V1, it is better to change the sockets on the catacomb so that UX base tubes may be used; they are cheaper and easier to buy from local dealers. The addition of new sockets and the added height of tubes will force us to discard the old cabinet and build or adapt the chassis to a new one. If we stick to UV-'99's, and only add a power stage, the old cabinet may be retained.

First, disconnect the battery connections and loop from the catacomb, and remove the panel. Unsolder all connections to the jacks and switch, and remove all these connections from the set. Then take out and throw away the jacks and switch; for you will have no more occasion to use these obsolete articles. Remove the battery cable from the set; it may be ripped up later, to use the wire within it.

When the jacks are removed, connect lugs 13 and 14 on the bakelite strip of the catacomb.

The chassis may be lowered sufficiently to take X-'99 tubes by sawing off the aluminum legs of the catacomb, and placing the oscillator coil under the right condenser. It cannot, however, be lowered enough in this way to take a '12A tube.

To change to X-99's and the '12A, take off the catacomb cover. Procure six Pilot No. 216 sockets, or others as small. Drill the proper holes in the cover to fit machine screws which will hold the sockets exactly over the old socket holes. Insert the screws and replace the cover. To the prongs of the old internal sockets, solder short pieces of wire, to be brought out later under and up to the terminals of the new sockets. Don't forget to transpose the "F" and "G" leads as in Fig. 5. Now place the new sockets in position, bringing the leads out and soldering to the new terminals.

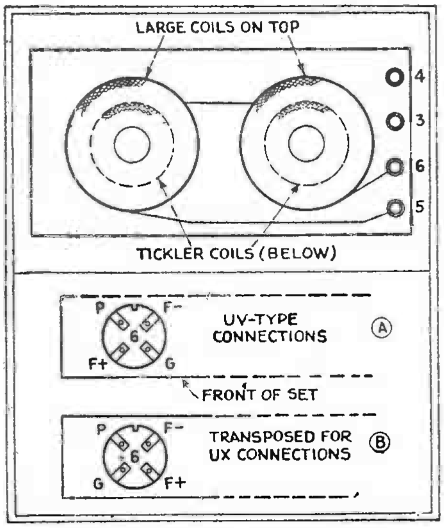

Fig. 4 (above) **Fig. 5** (below)

Above, the connections to be made to the coils. Below, present tube connections at (A) and new connections for UX tubes at B.

Do not solder to "F—" terminal of V1, which must receive an external 6-volt connection for the '12A. Final don't: do not screw down the sockets too tightly, or you'll break them.

Bore holes through the loop frame for the main "F—" lead; lug 9 will be unused when rewiring is completed. Bore two holes behind the output filter, for the speaker cords. Shunt the primary of the power audio transformer A.F.T. with a .006-mf. condenser; a variable volume control may also be used across these terminals, for better tone. This component should not have a higher ratio than 2½ to 1.

Place a "B" power unit in the old right-hand battery compartment; and a 40-volt "C" battery in the left compartment, for the '71A tube. If the power pack you have will not fit, you can take it out of its case, and rearrange the parts on a baseboard the width and length of the compartment. A 45-volt "B" battery which has been used a while will do for the new "C" battery. Of course the old 4½-volt battery may be discarded, and a tap taken from the big "C" battery.

The new filament and plate voltage wirings are shown in Fig. 3. Rheostats R1 (10 ohms) and R4 (20 ohms) are to be mounted on bakelite strips within the receiver and held to the side walls of the cabinet by brass angles over the condensers. Their adjustment is not critical and, once fixed, they need not be touched until the battery gets very low.

The addition of a battery trickle charger will completely electrify this set; it is advisable to use one which incorporates a relay. To adjust the voltage for the '99 tubes, use the full resistance of the rheostat R4 and set R2 half-way. Connect a voltmeter across the filament leads of any '99 tube, and advance R4 until the reading is just 3 volts. Only the best tubes should be used; inferior '99s may cause howling.

It is unwise to use an outside aerial longer than 15 feet.

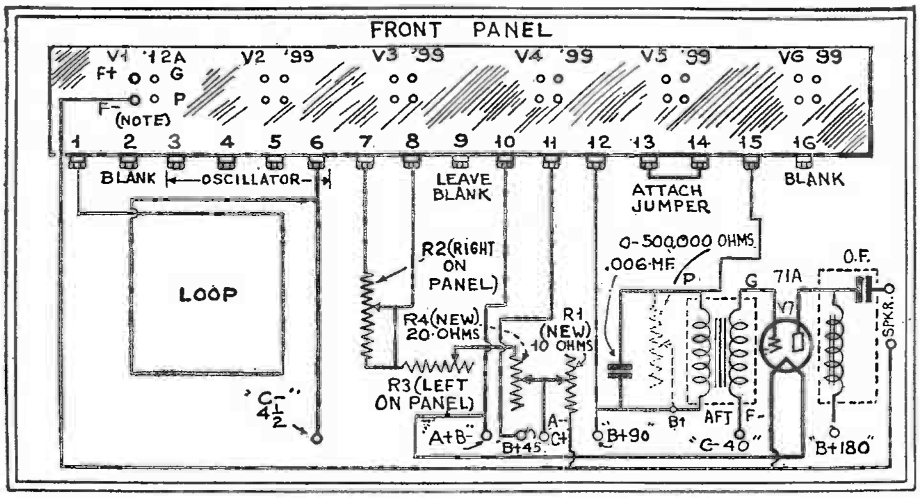

Fig. 3

The author disconnects the "F—" prong of V1 to use a '12A instead of a '99 here (this is optional) in remodeling the "AR-812," for operation with an added '71A amplifier from a "B" power unit.

THE SET OWNER PAYS FOR THE MANUFACTURER'S SECRECY

THE crying need in our work (servicing) for 1933 and any other time is schematic diagrams of the various receivers on the market.

Many manufacturers, it seems, are averse to "giving-up" their trade secrets (in this case, the secret being their circuit). This viewpoint is at first glance not unreasonable. After working months—perhaps years—to get out something good, why broadcast the result of all this labor and expense? That would appear to be "poor business." On the other hand, however, isn't this attitude somewhat silly? Who desires the details of anything, need only take the necessary time and application to trace out the "secret" and he can have it.

I have spent four to five hours' time tracing a "hook-up" and making a schematic diagram of a receiver that I was repairing. At the end the manufacturer had nothing on me as far as his receiver went; but I had put in a lot of time finding out what I must know to service the set intelligently; *and the owner, his (the manufacturer's) customer, paid me for the time I consumed.* If I had had this information ready to hand, the cost would have been nothing, comparatively speaking, to what it was; and it would not have left the "dark-brown" feeling in the mind of the customer against that particular set that it did.

In testing out for certain phases of trouble, it becomes necessary to sever certain joints to "break" the continuity of the circuit; and, unless there is a schematic diagram at hand, it is a haphazard procedure. One is often not sure that the test circuit is isolated and, until this condition obtains, you do not *KNOW* any more than you did before you started. If this is attempted without a diagram, you will have half the joints on a receiver unsoldered before you know it; and in the end find you have "broken" a number of joints that it would not have been necessary to break.

CHAPTER III

How To Make And Use Service Equipment

By Building His Own Equipment The Ingenious Service Man Can Save Money and Gain A Better Insight Into The Theory of Operation.

Combination Work Bench and Test Board

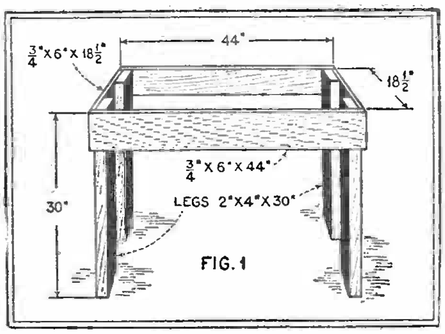

FIG. 1

The first step—the foundation unit on which the workbench is built. The bracing frame of Fig. 2 fits snugly inside.

FOR the workshop of the experimenter, as well as that of the service man, a good work bench, a test board and a toolrack are real necessities. These may be combined into one unit which places all tools, testing apparatus, etc., within easy reach and thus saves both time and labor. As, in the near future, a great many A.C.-operated sets will have to be taken into the shop for replacements, this combination should appeal to the service man who wants what he wants *when* he wants it.

The test-board should be equipped with accurate meters; as those of the cheap kind do not give accurate readings, because of the excessive current drawn. The workbench should be equipped with aerial and ground connections, an A.C. duplex outlet, and a vise; as shown in Fig. 3.

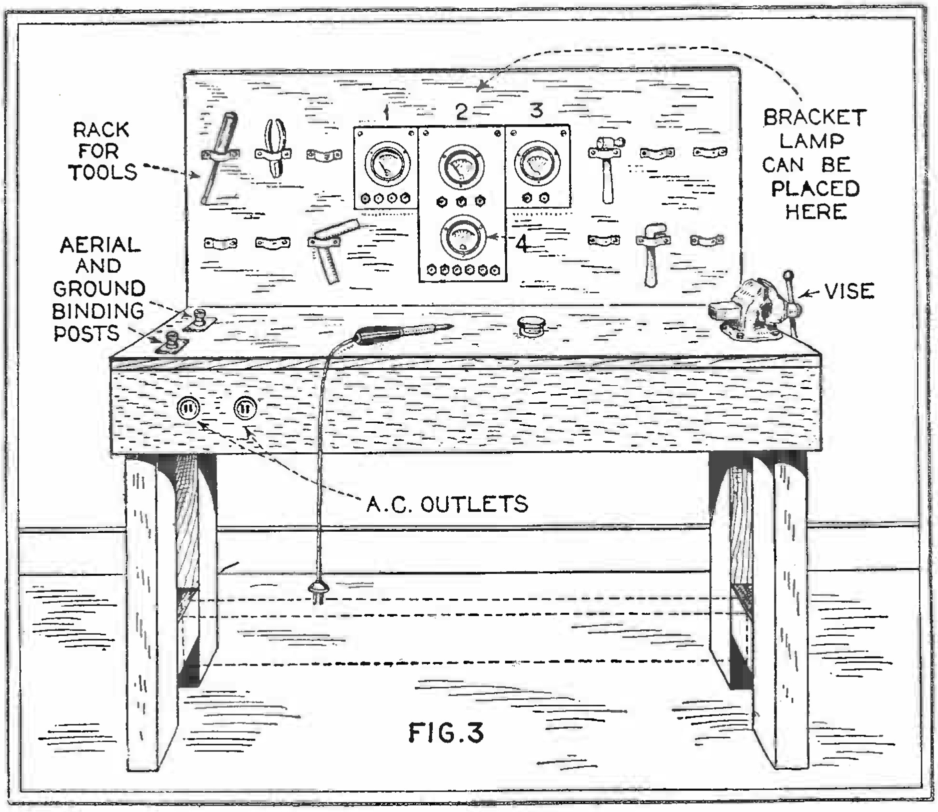

FIG. 3

The completed workbench with its backboard for tools and instruments. Those listed in the article were used by the writer; but the builder will, of course, select his own to suit his purposes and pocketbook. The dotted cross-brace is not essential, but strengthens the table.

Material Needed

The parts and lumber required for the construction of the combination here described and illustrated are as follows:

WORK BENCH

Lumber: 2 boards 44"x10"x1"; 4 boards 6"x¾", two 44" long, two 18½"; 10 pieces 2x4—four 30" lengths, two 38½", two 14½", two 10½. (One more 38½" and two 10½" lengths of 2x4, indicated in Fig. 3, are optional);
1 small vise;

1 "Ant" and 1 "Gnd" binding posts; and 2 bakelite strips, 1½x¾", for mounting them;

1 duplex flush receptacle and plate for A.C. outlet;
15 feet duplex lamp cord;
10 carriage bolts and nuts, 3" long;
16 flat- or round-head screws 2";
16 flat-head screws, 2½";

TEST BOARD

10 pieces ceiling lumber, 2" wide, 44" long; and 4 cleats, 2"x2"x26";
1 bracket lamp and pull-chain socket;
1 Hoyt voltmeter, 0-100-500 scale (resistance, 1000 ohms to 1 volt);
1 Hoyt rotary volt-ammeter, 0-10-100 ma., 0-10-amp., 0-10-200-volt, D.C.;
1 Hoyt A.C. voltmeter, 0-3-9-150 scale;
1 Jewell capacity meter, 1½-15-mf.;
3 bakelite panels, one 6"x12", two 6"x6";
8 carriage bolts and nuts, four 3", four 2";
12 phone-tip jacks;
12 round-head screws, 1¾"; and

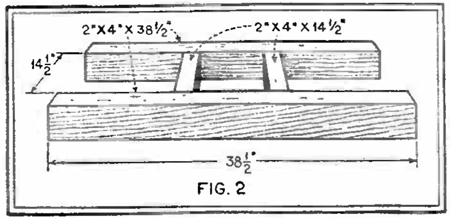

FIG. 2

The frame supporting the table-top.

A sufficient number of galvanized cleats, shaped to hold tools (as in Fig. 3) with screws to fasten them to test-board.

Construction of Table

The two longest thin boards (44x6x¾") are fastened to one end of each of the 30-inch legs (2x4) on the 2-inch sides; leaving a space of ¾-inch outside each leg, to overlap the end boards. The latter (18½x6x¾") are now fastened, as shown in Fig. 1, to the ends of the sections just completed. Keep their ends tight against the lips of the front and back strips, which extend just far enough beyond each leg to overlap the end boards. Use two 2-inch screws, on front, back and end boards, for fastening to each leg.

Then fasten the two 10½-inch lengths of 2x4 to the end boards, between the legs; keeping their top sides flush with the tops of the end boards, and using two 3-inch carriage bolts to each piece. They may also be tacked to the legs, by driving nails in slantingly from the top and bottom of the ends.

Lay out the two longest 2x4 pieces (38½" lengths) with their two-inch sides up; nail the 14½" lengths across and inside them, as shown in Fig. 2; and bolt this frame inside the top of the foundation. The top of this frame should be flush with the top edge of the boards, and it should fit very snug. A little of the front 2x4 should be cut away at the bottom, left, to give a place for the A.C. receptacle.

The table may be stiffened as indicated in Fig. 3, if desired, by the use of a "spreader" consisting of two 10½" lengths of 2x4 at the bottom and a longitudinal brace of the same stock, 38½" long.

The table is then completed by fastening on, for its top, the two widest boards (44"x 10") with the 2½" flat-head screws, countersunk in and mounting the binding posts. The duplex A.C. outlet may, perhaps, be more conveniently first attached to the frame.

The Test Board

To assemble the back of the bench is very simple. The ceiling material used is grooved on one edge of each piece, and tongued on the other to fit the groove of the next. Start six inches from the bottom of the cleats; and nail the first piece of ceiling to each cleat, with finishing nails through both grooved and tongued sides. Each succeeding piece need be nailed only through the tongued side; and the tongue is trimmed evenly off the topmost piece. The test-board foundation may now be placed flush against the back of the work-table, to which it is firmly bolted.

The meters are taken from their mountings (if any) and remounted in the bakelite panels; wires are run to the phone-tip jacks, which are mounted in the panels and, of course, designated on the outside of the panel above each. The panels then are fastened to the test-board, using 1-inch sleeves, or spools over screws, between the board and each panel. The final arrangement is indicated in Fig. 3.

A Set Analyzer For The Beginner

ORIGINALLY designed for a beginner, who was not to be trusted with the delicate Weston test equipment used in our shop, the little test outfit, shown pictorially in Fig. A and by diagram in Fig. 1, proved to be of such great value that we used it on many jobs, where its special features made it superior to even the most expensive units available.

The most valuable feature is the use of a simple jack, which allows the user to plug in on the detector (or other circuits) of any receiver under test.

Note the following, taken from the remarkable booklet **Radio Set Analyzers** by L. Van der Mel:

> "A check of the tube voltages and currents may show that they are perfectly normal and yet the set refuses to function." (Page 4, last paragraph.)

While such cases are not common, the Service Man does come across them occasionally. The use of the phone jack readily locates the possible source of trouble.

Features of the Tester

Take a case recently solved by means of this simple method. A type 950 Stewart-Warner was "dead." Tubes, and all voltage and current readings, were O.K., as were the aerial and ground—but the reproducer was silent.

Plugging the test plug into the detector socket of the receiver, and a pair of phones into the jack of the test outfit, we heard music!

The first A.F. gave louder music—and the volume on the last A.F. was deafening.

The trouble? The voice coil of the speaker was *shorted*. Our continuity test of the speaker showed a full reading. As the voice coil has such a small resistance (about 15 ohms) we did not suspect it.

Another speaker was tried and worked perfectly. Then we took apart the first speaker and found the shorted voice coil.

Another feature is the "HI-LO" switch. Instead of using several buttons for each test, the HI-LO switch makes it possible to get along with only one button.

For example, if HI-LO switch is set on "HI," and plate-voltage button "P" is pressed, we read plate voltage on our 600-volt range. If the lower (300-volt) range is wanted, we merely turn the HI-LO switch to the "LO" position. The same procedure is followed with other tests.

The tube-tester circuit differs from those most generally used.

Description of Tester

While this circuit, originally brought out by E. T. Cunningham, Inc., may be as accurate as the one used in our shop, it has several features that did not appeal to us. For instance, if a tube with a grid-to-plate short was put into the tester, the meter would be burnt out (found to our sorrow).

You will note in Fig. 1 that we need a 10-volt drop, which is furnished by means of a resistor (about 290 ohms) or else by means of an extra 10-volt winding, placed on the transformer. (Reversed connections will reduce the effective voltage.)

Our transformer was taken from an old Freshman "B" eliminator. We calculated the number of turns needed for the filament windings. The 10-volt winding needed 83 turns (8.3 x 10 = 83). Other transformers will doubtless use a different number of "turns per volt."

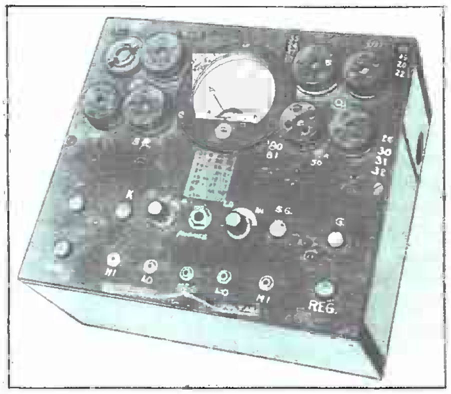

Fig. A

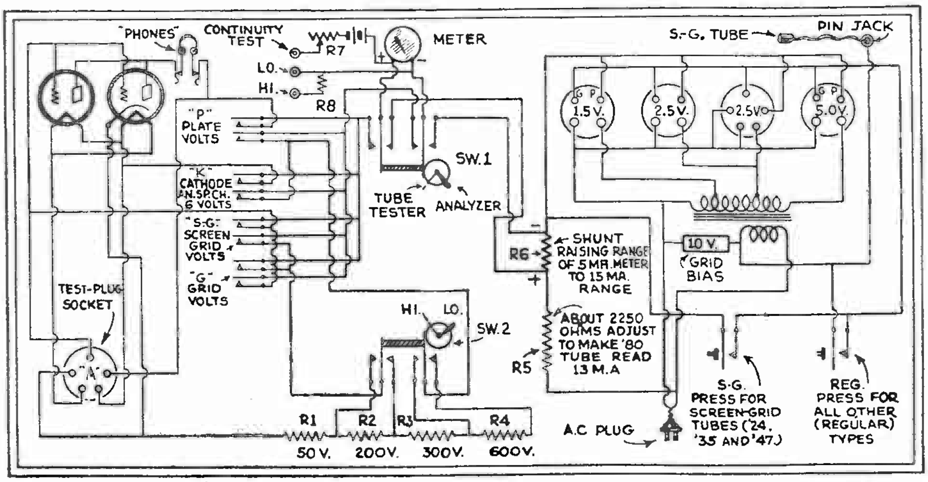

Fig. 1

No dimensions are given for the carrying case, since various readers will have their own ideas on how much "junk" they want to "drag" around to the job. We carry about 16 tubes, as well as the tester, cables, pliers, screw drivers and other small tools. A pair of headphones is kept in the service car.

The Ohmmeter

The ohmmeter has two ranges: with the switch set at "A" (analyzer), we have the high (200 ohms per volt) ohmmeter range; when the switch is set to "T" (tube tester), the shunt is across the meter, and our range is one-third as high—66 2/3 ohms per volt.

A simple ohmmeter chart is located in the cover of our carrying case.

Just for good measure, let us take another example. Suppose our meter read only 0.5-volt, with the resistor.

While plate current is an important test, it was omitted because we wanted to simplify the construction and operation of our tester. With normal tubes, we can assume that normal plate, grid, filament, and S.G. voltages will result in normal plate current.

At any rate, where accurate readings are important, we take the set to the shop where we have the equipment needed for best results.

As a rule, power-pack or other serious trouble is indicated by either a too high, or—in most cases—by a too low, even zero, reading of plate, screen-grid, or grid voltages.

The self-contained ohmmeter helps to locate shorted condensers, as well as open resistors, transformer windings, etc.

The 225-ohm resistor R5 controls the readings obtained on the meter when testing tubes. For best results, use a variable resistor, and adjust so that type '80 tube reads not quite full scale *before* button is pressed. Using a 15-ma. scale (as we did) the resistor was adjusted to make a good type '80 tube read about 13 ma.

Four sets of leads are required as follows: An A.C. 2-wire cable terminating in plugs at either end; a set of test leads, comprising two wires terminating in plugs; a screen-grid test lead terminating in a screen-grid clip at one end and a panel plug at the other; and a standard 5-wire analyzer cable.

List of Material

One A.C. outlet socket;
Three 5-hole tube sockets;
Four 4-hole tube sockets;
One meter (used 0-5 ma.; recommend 0-1 ma.);
One phone jack;
Seven pin jacks;
Two push buttons;
Four D.P.S.T. push button switches;
Two D.P.D.T. jack switches (Sw. No. 1 and No. 2);
One power transformer made out of old Freshman transformer;
One rheostat 200—250 ohms R1;
One 400-ohm resistor R8;
Two 10,000-ohm resistors R1 and R2;
One 40,000-ohm resistor R3;
One 60,000-ohm resistor R4;
One 2250-ohm resistor R5.

Inexpensive Service Test Panel

THE average Service Man is equipped with a satisfactory set analyzer which is adequate for the major tests encountered in the general run of service work. The writer owns a so-called "portable laboratory" which is supposed to furnish a multitude of tests; still, if you are a busy Service Man, your work bench will soon become one huge messy tangle of wires. One soon comes to the conclusion that fifteen minutes is spent hooking up apparatus necessary to run a one-minute test.

To rectify this condition, a compact test panel, well within the financial means of every Service Man, and flexible enough to cover the range of tests necessary in the shop, has been designed by the author. Fig. A presents such a surprisingly low-cost bench test panel, size 7 x 14 ins., which will take care of practically all specialized testing and which consists of the following: ohmmeters, 0-10,000 and 0-50,000 ohms, low-range ohmmeter; capacity measurement of .001-, .02-, .5-, 1-, and 2-mf. condensers by the substitution method; capacity meter; continuous line-voltage check; high, low, and medium continuity check; voltage scales of 4.5, 90, and 450 for D.C.; voltage scales of 10, 140, and 700 for A.C. All meter ranges brought out to small phone-tip jacks, requiring only two test leads to gain access to any test on the panel.

This test panel should prove a valuable asset to the Service Man as a time and labor saver when used in conjunction with the regular analyzer in the shop.

Low-Resistance Check

A very useful, and probably the least expensive, section of the panel is a low-resistance checking unit, which consists of one 2.2- and one 1.25-volt flashlight bulb. The 1.25-volt bulb may be rather difficult to secure, due to the fact that at the present time this bulb is not being used very extensively.

The two bulbs are in parallel and are in series with a 1.5-volt dry cell and phone-tip jacks, which are labeled LR, LR in Fig. 1, and are situated at the extreme right-hand side of the jack strip. There is no switch on this unit and it is possible to use either of the two bulbs by simply tightening the one desired and slightly loosening the remaining one. The 2.2-volt bulb is used in checking resistances between 2 and 9 ohms, which cover the majority of low-resistance tests encountered in service work. With the 2.2-volt bulb tightened and two test leads inserted in the pin jacks marked LR, LR and placed across the primary or secondary of R.F. coils, R.F. chokes, voice coils or any resistance between 2 and 9 ohms, the bulb will either light dimly or fail to light; should the bulb light to full brilliancy, there is evidently a short circuit.

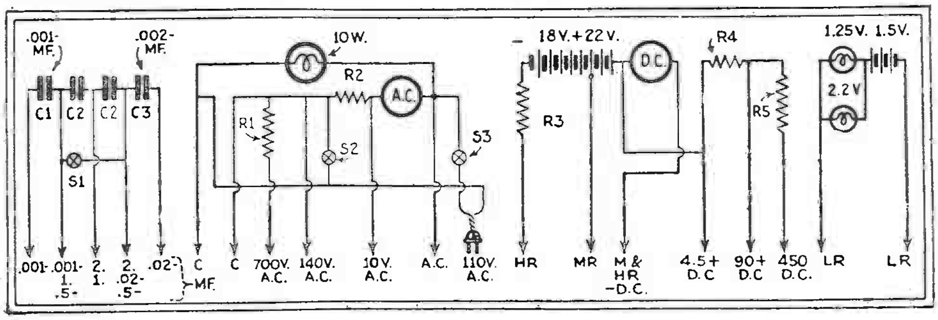

Fig. 1

Schematic circuit of the test panel. Its very simplicity can easily be appreciated by studying this diagram. The markings of the posts on this diagram correspond to those of Fig. A. The wiring is simple, and a beginner should have no difficulty in following the description in the text. The capacity of condensers C1, .001-mf.; of C2, .1-mf. each; and C3, .02-mf.

Shorted condenser plates can be located by placing the leads across the condenser and varying the capacity from minimum to maximum, and at any position of the rotor where the plates rub, the bulb will light brightly. It is then not necessary to unsolder the coil which is usually connected across the condenser. By repeating this procedure to each condenser of a gang, the one which is shorted may be easily detected.

The 1.25-volt bulb is used to check resistances between 0 and .5-ohm, such as very low resistance coils, center-tap resistors, etc. This test is ideal for locating high-resistance joints and is used in the same manner as the 2.2-volt bulb.

By noting the intensity of the light which is produced by an unknown resistance when placed under this test and compared with the light which is produced by a known resistance, one may be able to judge with fair accuracy the value of the unknown resistance, providing its value lies within the range of this test. The fact that the resistance of No. 40 copper wire may be placed at one ohm per foot helps in making this comparison.

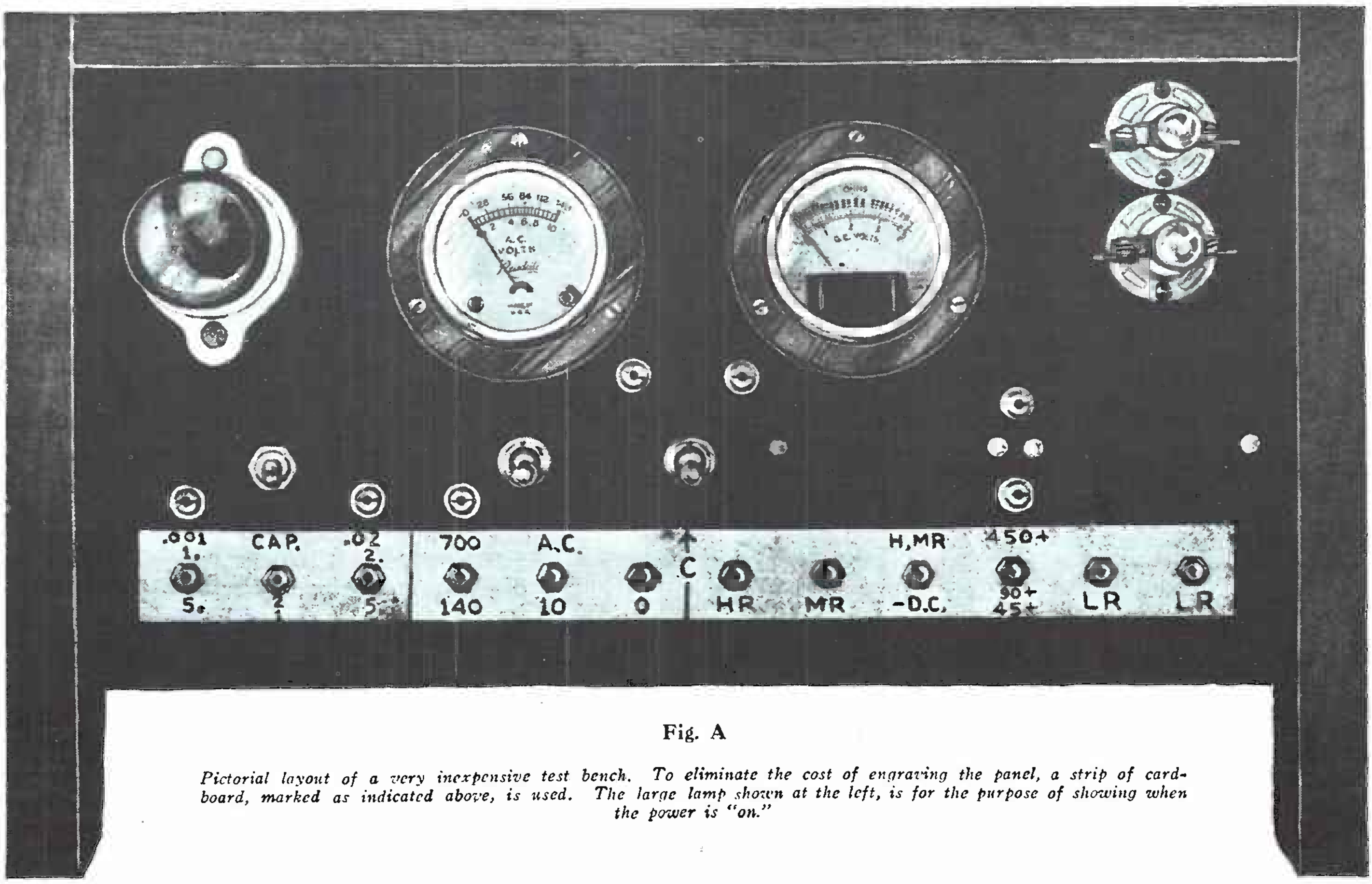

Fig. A

Pictorial layout of a very inexpensive test bench. To eliminate the cost of engraving the panel, a strip of cardboard, marked as indicated above, is used. The large lamp shown at the left, is for the purpose of showing when the power is "on."

Resistors which are too large to register under this test may be easily checked with the ohmmeter. After checking for short circuits, and the bulb fails to light, it is a wise procedure to test with the ohmmeter to be sure of continuity.

Condenser Section

At the extreme left-hand end of the jack pin strip, Figs. A and 1, is located the condenser substitution section, consisting of .001-, .02-, and two 1-mf. condensers. Switch S1 is used to place the two 1-mf. condensers in parallel for the 2-mf. The capacity across the .5-, .5-jack pins is .5-mf. resulting from the two 1-mf. condensers being placed in series.

The substitution method is one of the quickest and surest means of locating open condensers, as it does not require the removal of the condenser under test in order to make the test. It is used whenever a receiver hums, oscillates, or is dead, and all the voltages appear to be normal. To each condenser the procedure is as follows: connect the receiver to the aerial and ground in the usual manner and set all controls for reception. Select a capacity on the panel which will correspond to the capacity to be tested and, by means of the test leads, place the panel condenser across the receiver condenser. If normal reception results, the condenser in the chassis is open and should be replaced.

Ohmmeter, D.C. Voltage Scales, High and Medium Continuity Test

The ohmmeter is used to measure values of resistances up to 50,000 ohms, also providing medium- and high-resistance continuity tests. The D.C. voltage scales are instrumental in tracing voltages through the circuit from power pack to their destination in cases of shorts and opens.

This unit of the panel has for its nucleus a 4.5-volt, 10,000-ohm direct-reading resistance meter. The negative post of this meter is the common terminal for the 10,000 and 50,000 ohmmeter, and the negative post for all D.C. scales. Multiplier resistors R4 and R5 (Fig. 1) are placed in series with the positive terminal of the meter to increase the original 4.5-volt scale to 90 and 450 volts, respectively. Resistor R3 is placed in series with the 22.5-volt "C" battery lead to increase the ohmmeter range from 10,000 to 50,000 ohms; readings being taken on the 10,000-ohm scale and multiplied by 5. The range may be further increased to 100,000 ohms by placing another 22.5-volt "C" battery and resistor of suitable value in series with the original 22.5-volt "C" battery and adding another jack pin to the panel.

It is advisable, although not shown in the schematic, to place a 40-ohm rheostat in series with the +22.5-volt "C" Battery lead to shift the ohmmeter to 0, thereby compensating for any error due to the variation of the "C" battery voltage.

A.C. Voltage Scales, Capacity Meter

The A.C. unit of the panel consists of a double-range voltmeter of 0-10-140 volts, R2 and R1 being multiplier resistors which increase the 10-volt scale to 140 and 700 volts, respectively. The 10-volt scale is used to check the filament voltages from power transformers. This scale may also be used as an output meter by connecting it across the voice coil of a dynamic speaker. The 700-volt scale is helpful in locating unbalanced secondaries of power transformers. When the switches S2 and S3 are closed, the line voltage may be read directly on the 140-volt scales.

By inserting leads into jacks C, C, which are located between the two meters, and applying to condensers having a capacity of .1-mf. or larger (with the panel switch S3 closed) a reading will be obtained on the 140-volt scale. By jotting down the readings for various known capacities and using this table in collaboration with the meter, a capacity meter, which is adequate for service work when dealing with condensers of this range is obtained. The ohmmeter should always be used first to test for high-resistance leaks before subjecting condensers to the capacity test.

When the switches S2 and S3 are closed, and leads plugged into the 140-scale jacks, 110 volts A.C., which may be used occasionally in service work, is secured. In the upper left-hand corner of the panel, a 110-volt porcelain receptacle is located for use either as a pilot light, indicating that A.C. is being supplied to the meter and no other tests can be made until switches are opened, or it may be used to plug in any apparatus requiring 110 volts A.C.

Multiplier Resistors

The values of resistors R1, R2, R3, R4, and R5 depend solely upon the meters selected and their resistances may be obtained in a number of ways.

They may be secured from the manufacturer of the meters by stating the model and range of meter and the voltages which you expect from them. R2 is usually included with the purchase of the meter. Multiplier resistors which increase the range of a voltmeter may be calculated from the following formula:

$$R1 = \frac{R(E1 - E)}{E}$$

where,

$R1$ = Multiplier resistor,

R = Internal resistance of meter,

$E1$ = Highest reading of the meter desired, and

E = Present reading of the meter.

The value of the various resistors may be determined by the following procedure. Place a variable wire-wound resistor of 10,000 ohms or larger in the circuit where resistor R4 would ordinarily be and adjust its control so that its total resistance is in the circuit; then across jack pins labeled 90 volts, place 90 volts of "B" batteries and gradually decrease the resistance until the indicating hand of the meter lies directly over the last scale division on the right of the scale, measure the resistance of the variable resistance which is in the circuit with the ohmmeter and replace with a fixed resistance equal to this value permanently in the circuit. After R4 is placed in the circuit, the resistor R5 may be found in the same manner using the 90 volts of "B" batteries across the 450-volt jack pins and adjusting the resistance until the hand of the meter lies directly over the .9 division on the 4.5-volt scale. Measure the resistance as before and substitute a fixed resistor of the same value as the variable unit.

The resistance of R1 and R2 may be found by the same procedure except that the A.C. 110-volt line is used instead of the "B" batteries. The variable resistance substituted for R2 is adjusted first until the line voltage reads directly on the 140-volt scale of the meter. After finding the value of R2, it is then possible to use the same method in determining the value of resistor R1; adjusting the resistance until the pointer of the meter lies directly over the 22nd division on the 140-volt scale, providing the line voltage is 110 volts. If the line voltage is other than 110, the reading should be equal to the line voltage divided by 5, for the 700 range.

The multiplier resistor for the 0-50,000 ohmmeter scale is found by placing the variable resistor in the circuit in place of R3, short-circuiting the jack pins HR, HR and then decreasing the resistance until the pointer of the ohmmeter reads full scale. Replace the variable resistor with a fixed resistor of value equal to the variable resistor.

Construction of the Panel

Fig. 2 shows a suggested panel layout for constructing the test board, giving the location of the various parts. To eliminate the expense of engraving the panel and still give the instrument a finished appearance, the majority of the jack pins are mounted in the center of a 1 x 12 in. strip of white cardboard, the remainder of the pin jacks are placed directly above this strip, except the capacity meter jacks which are located between the two meters. The various jacks are identified by means of lettering placed on the cardboard.

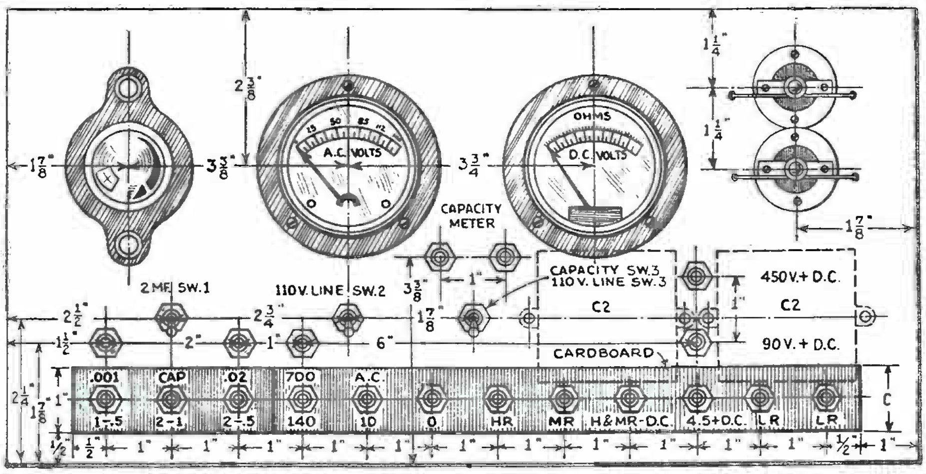

Fig. 2

The layout above shows the location of all the parts used in the test panel. The two pilot lights at the right are for measuring small resistors, while the large one at the left is for indicating when the power supply is connected. All dimensions are given for the convenience of constructors.

The rear of the panel may be arranged according to the parts on hand. All resistors and condensers except the 1-mf. condensers C2, C2 are self-supported by their bus-wire connections. The battery cable may be of such length as to permit the batteries to be placed under the work bench if so desired.

Fig. 3 shows the construction of test leads which are very serviceable as well as economical. From a section of windshield-wiper rubber hose, cut two lengths 5 ins. and 1¼ ins. long and slip these over a 5-ft. length of rubber-covered wire to which is soldered two phone-cord tips. At the back of the tips on the wire, place a coating of rubber tire-cement. Before the cement is dry, slip the rubber tubes over the phone tips as shown in the drawing. In addition to a pair of the above described leads, one should have a pair of leads having the small rubber tubes at one end and small battery clips on the other, and a pair of leads with clips on both ends.

Parts Required

- One inexpensive A.C. double-range voltmeter, 0-10-140 volts;
- One resistor to increase the 10-volt range to 140 volts A.C., R2;
- One resistor to increase the 140-volt range to 700 volts A.C., R1;
- One inexpensive 4.5-volt, 10,000-ohm resistance meter;
- One resistor to increase the ohmmeter range to 50,000 ohms, R3;
- One resistor to increase the 4.5-volt range to 90 volts D.C., R4;
- One resistor to increase the 90-volt range to 450 volts D.C., R5;
- Three Toggle switches, S1, S2, S3;
- Two miniature flashlight porcelain receptacles;
- One 1.25-volt flashlight bulb;
- One 2.2-volt flashlight bulb;
- Nineteen phone tip jacks;
- One .001-mf. condenser, C1;
- Two 1-mf. condensers, C2;
- One .002-mf. condenser, C3;
- One strip white cardboard 1 x 12 ins.;
- One rubber panel 7 x 14 ins.;
- One 110-volt porcelain receptacle;
- One roll hook-up wire;
- Five ft. lamp cord;
- One 110-volt plug.

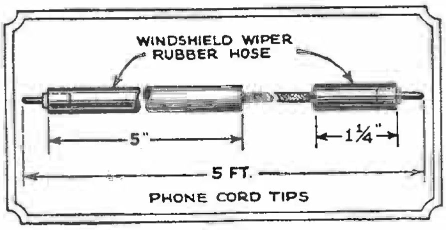

Fig. 3

Detail of the test prod used in the panel.

TAKING THE KICK OUT OF CONDENSERS

AFTER receiving several bad burns from pack condensers which had retained their charge for a considerable time, the writer conceived the idea of using a "Jazz Stick" for discharging them. This device, obtainable from any musical supply house, consists of a "fan" of fine wires (arranged to collapse into the handle, for portability) and, when brushed across the terminals of a charged condenser bank, will discharge every one of the condenser units. This has been found quicker and more convenient than the usual method of using a screwdriver to short the terminals. The implement is about a foot long when open, as illustrated in Fig. 1.

Caution: Tape the handle before using the "jazz stick."

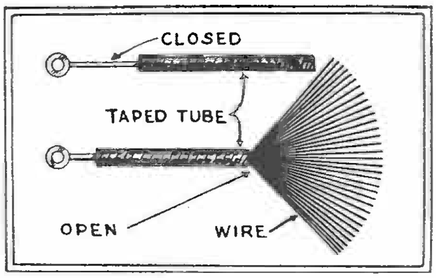

Fig. 1

This "jazz stick" may save the user from inventing a few new, fancy steps—after a jolt from a condenser.

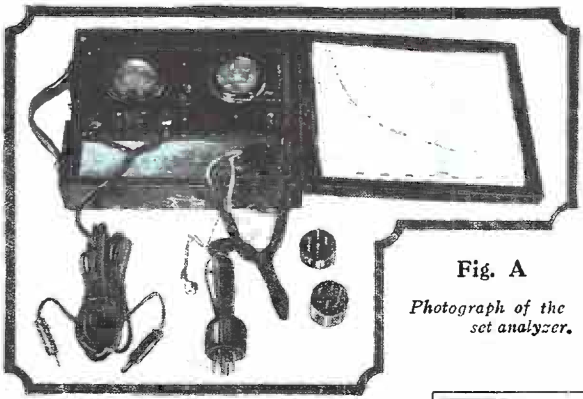

Fig. A

Photograph of the set analyzer.

Constructing a SIMPLE SET TESTER

EMERSON once said, "If eyes were made for seeing, then beauty is its own excuse for being." This bit of philosophy can be applied to articles describing set analyzers as well as flowers. The test set illustrated in Fig. A was built because of its extreme compactness, simplicity and low cost, although it is not lacking in symmetry.

The size of the instrument panel is only 4¼ inches by 8 inches, while the outside dimensions of the carrying case are 8½ inches long by 6¾ inches wide by 2½ inches deep. A sewing machine tool box was pressed into service to house "the works." These boxes may be obtained for almost nothing at any sewing machine dealer's. If a box of this type cannot be obtained conveniently, any other case of suitable size may be substituted.

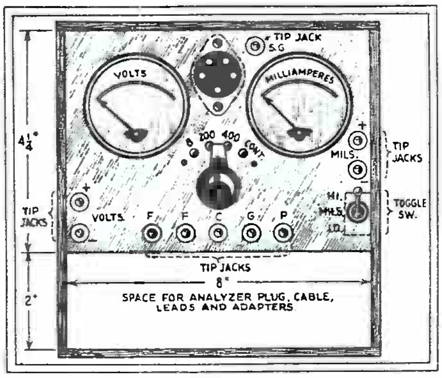

Fig. 1

Suggested panel layout for the tester. Miscellaneous material may be kept in the side compartment.

Description of Analyzer

Figure 1 shows the panel layout. As will be observed, only two meters are used; a D.C. voltmeter and a D.C. milliammeter. The A.C. voltmeter was purposely omitted, for two reasons. A third meter would add considerably to the bulk of the test kit, and is not used often enough to make it absolutely essential. The most important readings are obtained on the two D.C. instruments. If A.C. readings are desired, the Service Man can carry a separate portable meter in his tool kit.

A five-prong flush-mounted socket is placed as shown. The use of a four-prong adapter obviates the necessity for a four-prong socket on the panel, tending further toward conservation of panel space. Tip jacks are used for the tube-socket terminals, screen-grid clip, and external posts of the voltmeter and milliammeter. *This procedure brings all parts of the circuit right out on the panel, where the tests can be made directly.* Complicated switching arrangements are thus done away with.

The meters used in this tester are of the two-inch flush-mounting type. Weston Model 506 was the make selected. The voltmeter in this case had two scales, 0-8 and 0-200. A 0-400 scale was added by the inclusion of a multiplier in the circuit. The resistance of the multiplier is equal to the resistance of the meter at the 200-volt range, in this case 25,000 ohms. The milliammeter is a 15 ma. instrument with an additional shunt connected through a toggle switch for the 150 ma. range. The shunt is easily made by connecting the milliammeter in series with another milliammeter (of about 150 ma. range), a variable resistance, and a battery. Various lengths of resistance wire (from an old rheostat) are connected across the terminals of the 15 ma. meter until its reading (multiplied by 10) corresponds to the reading of the higher-range meter. When the proper length of wire has thus been determined experimentally, a piece of spaghetti tubing is slipped over it and lugs carefully soldered to the ends. We now have our shunt for the "HI" range of the meter. The toggle switch takes this shunt out of the circuit when the "LO" range is required.

Associated with the voltmeter circuit is a four-point selector switch for 8, 200, or 400 volts, or for continuity testing. Reference to the wiring diagram (Fig. 2) will show how this is accomplished. It will be noted that with the testing battery connected as shown, it is impossible to short-circuit it, should the switch happen to rest upon two adjacent points. The worst condition possible is a short through the two external multiplier resistances—49,000 ohms—which is not very serious. This condition occurs when the switch lever happens to rest upon the two right-hand points.

The handle of a round "stippling" brush, together with the base of a burnt-out '27 tube, serves admirably as an analyzer plug. One end of the cable connects to the socket prongs and the screen-grid cap on the side of the handle. The other ends of the wires go to the respective tip jacks on the panel.

A pair of flexible leads should be made with phone tips on one end and test prods on the other. The positive lead may be marked with some red thread or other device. For testing screen-grid tubes, a short lead is made with a phone tip at one end, a screen-grid clip at the other. The tip of this lead is plugged into the tip

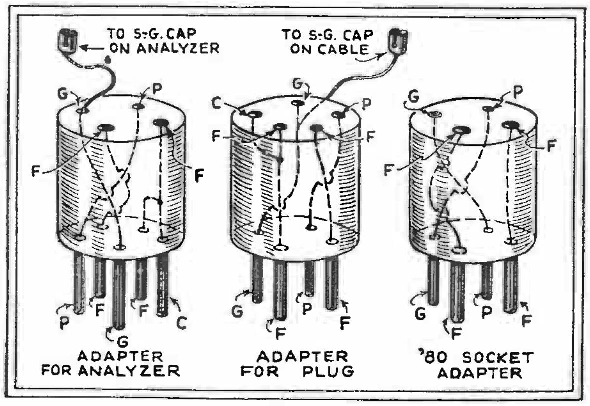

Fig. 3

At the left, an adapter for the plug-end of the analyzer cable; center, the adapter for the socket in the analyzer; and right, an adapter for testing '80 rectifiers.

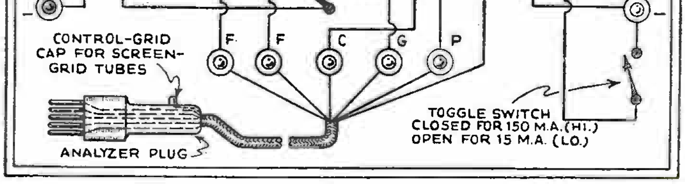

Fig. 2

Complete schematic diagram of the tester. Voltage measurements are made at the socket terminals of the analyzer by the voltmeter leads which are inserted in the left-hand terminals.

jack marked "S.G.", and the screen-grid clip, of course, on the cap of the screen-grid tube. The voltmeter leads can be used on the milliammeter, if it is desired to use that instrument externally.

The milliammeter, being connected in the plate circuit of the tube, gives plate current readings directly. *The voltmeter, however, must be applied to the various points in the circuit by means of the test prods on the ends of the voltmeter leads.* As mentioned above, this arrangement eliminates the necessity for a complicated mess of switching devices. It also makes possible tests between otherwise inaccessible points of the circuit.

In order to realize the full usefulness of the test set, several socket adapters will have to be made, or purchased. The most important are a 4-to-5 prong adapter for the panel socket and a 5-to-4 prong adaptor for the end of the analyzer plug (Fig. 3). The current delivered by the second plate of an '80 rectifier tube can be measured by using a special socket adapter constructed as shown in Fig. 3. It will be noted that the grid and plate wires are reversed; that is, the grid connects to plate, and the plate to the grid. This arrangement connects the milliammeter into the second plate of the rectifier tube, enabling the user to determine if the tube is delivering a balanced output. A bad case of hum can often be traced to an unbalanced rectifier tube.

Besides being useful for continuity tests, the voltmeter can easily be calibrated to read directly in ohms. Many external uses can also be found for the milliammeter.

A Vacuum Tube Multimeter

An instrument for the Service Man or experimenter which measures current to 100 milliamperes, voltages to 500, amplification gain, resistances and large inductances

A GREAT deal has been written about the vacuum-tube voltmeter, covering its theory of operation, usefulness and constructional data. Much of what was written is by the radio engineer and for the radio engineer; the language is couched in technicalities, and difficult for the average radio experimenter and radio set builder to understand completely. Such knowledge, although desirable, is not necessary in order to construct and use such a device. The fault with many of the instruments described has been that they are intended for special tests and are not sufficiently versatile and self-contained for the average experimenter's use. It is also true that they are of great accuracy—and very costly as well.

Herewith is presented a vacuum-tube voltmeter for the Service Man, the dyed-in-wool radio experimenter, and the set builder. It is easy of construction and is inexpensive, considering the multitude of work that may be accomplished with it. Its accuracy (within limits of course) depends upon the accuracy of calibration. It is of such size that it is easily portable, making it a useful testing instrument for testing the voltages of both A.C. and battery-operated radio receivers, as well as "B" power units, within the range of the instrument. In this respect it is interesting to note that, because of the very high resistance between the elements of the tube, when the instrument is placed in shunt with a device to be measured, practically no current is consumed.

The instrument will measure either A.C. or D.C. voltages from 0 to 10, 0 to 100, or 0 to 500. The milliammeter shunts provided allow the measurement of plate currents between 0 and 100 milliamperes. For this purpose three scales are provided; 0 to 1, 0 to 10, and 0 to 100. By the proper arrangement, the amplification gain of both R.F. and A.F. coupling devices may be determined and the amplification gain per stage, or as a whole, of any R.F. or A.F. amplifier may be measured. Unknown impedances or resistances may be measured, or compared against a known resistance standard. The latter measurements include those of the output impedance of amplifiers, and the input impedance of loud speakers, at any desired frequency. Numerous other measurements may be made which are not listed here.

Material Needed

For the construction of this instrument the following parts were utilized:

One Weston "Model 301" 0-to-1 scale milliammeter (MA) (Many experimenters have on hand a R.F. 0-to-110 scale thermo-galvanometer whose thermo-element has been hurnt out or broken; this would make a suitable meter for use in this device. This instrument, without thermo-couple, has a full scale deflection of 0.75-milliampere.) Whichever instrument is used may be provided with a 0-to-10 volt scale, as shown here, although this is not necessary;

Two Hart-Hegeman S.P.D.T. snap switches (H) (K);

Three Hart-Hegeman S.P.S.T. snap switches (G) (I) (J);

Two Carter filament switches, Midget type (F) (E);

One 400-ohm potentiometer of rugged construction (P);

One Carter Midget 25-ohm rheostat (R3), and a .06-ampere filament ballast, (R2);

One UX-'99 tube, and socket (VT);

One Electrad 2000-ohm "Type B" Truvolt resistor, (R5);

One Electrad 50,000-ohm Type B Truvolt resistor (R4);

Eleven Yaxley cord tip jacks (AC1) (HT) (HT1) (VT) (VT1) (M) (N) (L) (MA1) (MA2) and (MA3);

Five Pilot plain bakelite binding posts (B1) (B2) (B3) (B6) (B7);

Two Pilot bakelite binding posts with A.C. designation (B4) (B5);

One Sangamo .002-mf. molded mica condenser (C1);

One bakelite or hard-rubber panel 13½ by 5½ by 3/16 inches to fit top of utility chest or box;

One "Utilco" pressed steel tool chest 14 by 6 by 6½ inches, outside;

Four 22½-volt portable "B" batteries;

Four standard 4½ volts "C" batteries, one for filament supply;

One cord tip (CT);

One piece bakelite 2 inches square; fourteen 4-32 brass machine screws; two pieces heavy spring brass, or phosphor bronze, strips ½-inch wide by 2 inches long, 1¼-inch shaft 2¾ inches long. At one end of the rod, ⅝-inch should be turned down to ⅛-inch diameter and tapped for 6-32 thread. One piece copper or brass 1¼-inch square. These parts are used for special switch assembly. (A-B-C-D.) A new Yaxley "Bi-Polar" switch, which has since become available, may be used instead.

Assembly

The panel is first cut to exact size, to fit just inside the flange of the tool chest; right angle brackets are soldered to the inside of the chest, 3/16-inch below the top edge. These are to support the panel; six should be used, two at each end and one in the center on each side. This placement will insure proper clearance from the instruments mounted on the panel. The panel is then laid-out, using the general arrangement shown in the illustrations.

As a great deal of space was not available, it was necessary to make the special switch as small as possible; the assembly is seen in Fig. B. The square 2-inch bakelite strip is now scribed for a 1⅝-inch circle. 170 degrees of this circle is divided

Fig. A

The Multi-Meter mounted in a steel tool chest, used by Service Men for the purpose, which contains also the necessary batteries for its operation. A circuit diagram and calibration chart mounted in the lid are convenient for reference.

The heart of the apparatus is of course the meter MA. The instrument used should be one of known accuracy; its type and scale reading may differ from that shown, with corresponding change in the calibration. The lettering is explained in the text.

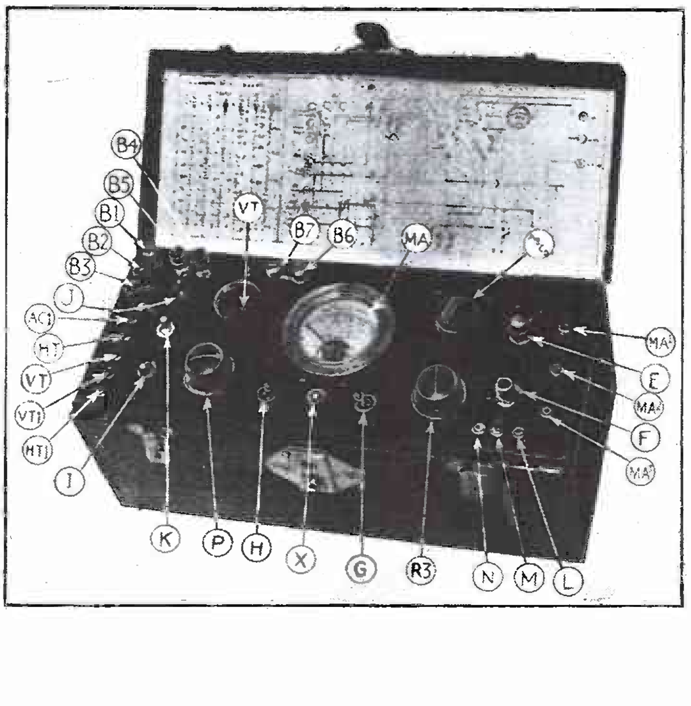

into divisions for the 14 switch points. The center of the piece is drilled, to pass the turned end of the ¼-inch shaft; the switch-point holes are also drilled and tapped for 4-36 screws. After dipping the 4-32 screws into shellac, they are forced into the 4-36 tapped holes in the bakelite, this procedure will firmly anchor them. Before proceeding, the holes for the support pillars should now be drilled in the rear corners of the bakelite switch plate. The triangular contact plates should be cut to shape, and are secured in position by the same screws that fasten the bakelite to the support pillars. On the side of the bakelite piece which carries heads of the contact screws, (counting from the first screw on the right, with the contact plates held at the bottom) the second, fourth, sixth, ninth, eleventh and thirteenth screws are cut flush with the bakelite. These spacing screws are used to prevent shorts between live points when the switch blades are rotated. The heads of the remaining screws serve as soldering contacts. The length of each screw on this side should be about ¼-inch, including the thickness of the head.

The switch blades should then be cut to shape and drilled to take ¼-inch insulating fibre or bakelite washers. Before assembling the blades on the shaft, the contact sides of the screw switchpoints should be filed down to an even height of 1/16-inch. The burrs should be removed from the edges of the screws, to prevent scraping the switch blades.

The brass shaft is then placed through the switch plate, after placing a thin brass washer over the threaded shank to prevent wear of the bakelite. After the shaft is through, a 6-32 nut (not more than 1/16-inch thick) is run over the threaded part, but not so tight as to prevent rotation of the shaft. A large insulating washer, ½-inch in diameter, is placed over the shank; then a switch blade and its inner ¼-inch washer insulator; another ½-inch fiber washer; the other switch blade and its ¼-inch washer; a final ½-inch fiber washer, a brass washer and tightening nut. Before tightening the switch-blade assembly, set one switch blade on contact pin No. 1 and the other on pin No. 8. Then tighten firmly. Place on an additional nut to prevent loosening of the assembly. A pin, which prevents the blades rotating past their points, is necessary. The switch assembly is then fastened to the bakelite panel.

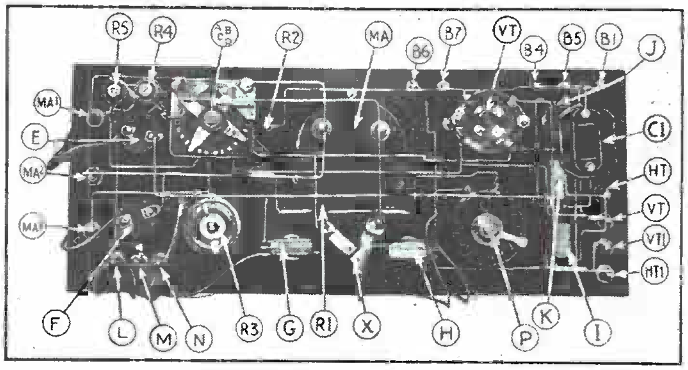

Fig. B

The panel of the Multi-Meter as it appears from the under side, showing all the instruments and wiring. The multi-point switch ABCD must be made by the constructor; the others are standard, and the workshop will undoubtedly afford most of them.

The "Short" switch ("X") is next made. This is made from the springs of an old phone jack and *is arranged to close contact until pressed.* A knob protrudes through the panel. This is a detail easily worked out by the constructor.

The instrument is now wired with busbar; flexible hook-up wire is not used, because of the possibility of disturbing calibration. The joints should be well soldered and, after the assembly is wired, flexible leads for the batteries (which are strapped to the bottom of the case) are soldered to their proper terminals.

Calibration

If the builder does not care to send this instrument to one of several testing laboratories for calibration, he may calibrate the instrument in the following manner.

Before the batteries are connected, the shunts are made for the milliampere scales. The 0 to 10 (R1) shunt is made first, by using a 15-inch length of No. 34 or 36 copper (insulated) wire. This is soldered between one side of the "Short" switch and the "—" side of the meter; the other side of the "Short" switch having previously been connected to the "+" side of the meter and MA2. After connecting in series with the meter to be calibrated an external milliammeter of suitable scale, a Clarostat or similar resistance, and a dry cell or storage battery, the length of the wire shunt is varied until both meters give a 10-milliampere deflection. The wire is then wound on a small round stick, *non-inductively.* (Double the wire back on itself and wind as a single strand.) A drop of sealing wax will anchor the stick, to protect the wire joint. The multi-point switch is now placed on position "A."

When calibrating or measuring potentials above 10 volts, it will be noted that the vacuum tube VT is connected up "backwards," to indicate the "grid current" on MA. That is, MA is connected in the *grid* circuit of VT and the voltages to be measured are applied to the *plate* of VT. A little reflection will show that a positive potential of, perhaps 50 volts, would apply a difference-potential of about 35 volts, positive, to the grid of the '99 if the circuit remained as connected for current up to 10 volts; thirty-five volts positive on the grid of VT would ruin it.

The shunt for the 100-ma. scale should be made similarly to R1. This is connected across the "A" points of the multi-point switch and designated as "R2."

After the shunts are made, the batteries are conneected and the tube inserted in the socket. The bi-polar switch ABCD is placed on position "A," and switch (E) closed. The rheostat is adjusted until the meter, shunted by R2 only (switch X pressed "open"), indicates the filament requirements of VT, or 60 ma. *This must be done before making any future measurements, in order to maintain a fixed standard.* Proceed by rotating bi-polar switch to points B: next close

Table I

TO MEASURE	SWITCH	—	POSITIONS						JACK POSITIONS			SHUNT	CONNECT TO TERMINALS	"SHORT" SWITCH	REMARKS
	MULTI POINT	E	F	G	H	I	J	K	L	M	N	"S"			
Milliamps. 0-1.0 scale	D	off	off	off	max.	off	off	B1	off	off	off	off	Ma1 & Ma2	open	
Milliamps. 0-10.0 scale	D	off	off	off	max.	off	off	B1	off	off	off	off	Ma1 & Ma2	closed	
Milliamps. 0-100 scale	A	off	off	off	max.	off	off	B1	off	off	off	off	Ma1 & Ma3	open	
Volts (A.C.) 0-10 scale	B	on	on	on	max.	off	short B1 to B2 for test	B1	on	off	off	off	Vt & Vt1	open	
Volts (D.C.) 0-10 scale	B	on	on	on	max.	off		B1	on	off	off	off	Vt & Vt1	open	(Note E)
Volts (A.C.) 0-100 scale	C	on	on	off	either	close for zero test	off	B1	off	on	off	off	HT & HT1	open	(Note F)
Volts (D.C.) 0-100 scale	C	on	on	off	either		off	B1	off	on	off	off	HT & HT1	open	
Volts (A.C.) 0-500 scale	D	on	on	off	either		off	B1	off	off	on	off	AC1 & HT1	open	
Volts (D.C.) 0-500 scale	D	on	on	off	either		off	B1	off	off	on	off	HT & HT1	open	
Impedance or Resistance (Unknown)	B	on	on	on	max.	off	on	B3 to B1	on	off	off	close for R.F. test	(Note C)	open	(Note G)
Gain (Note A)	B	on	on	on	max.	off	on	B1, B2 & B3	on	off	off	close for R.F. test	(Note D)	open	(Note H)
Gain (Note B)	B	on	on	on	max.	off	on	B1, B2 & B3	on	off	off	off	B1, B2 & B3; see "Remarks"	open	(Note 1)

Note A. R.F. or A.F. gain per stage; or entire amplifier, or output of A.C. voltage generator.

Note B. Gain of A.F. stage-coupling device, with current in primary.

Note C. Connect unknown to B2-B3; graduated resistance box to B1-B2; A.C. supply of desired frequency to "A.C." posts.

Note D. Connect input to B1, negative return to B2, output to B3.

Note E. If measuring R.F., close shunt "S" of by-pass condenser. Multiply meter reading by 1.414.

Note F. Multiply meter reading by .701 for effective volts.

Note G. Throw "K" to B3 position; take reading; throw "K" to B2 position. Vary "decade" resistance until same meter reading is obtained. Read value of impedance of resistance direct from resistance box. Inductance is calculated by the voltage, current and impedance formulas.

Note H. Make readings of B1 and B2; subtract difference.

Note I. Refer to N E M A Radio Standard for circuit and external apparatus used in this test.

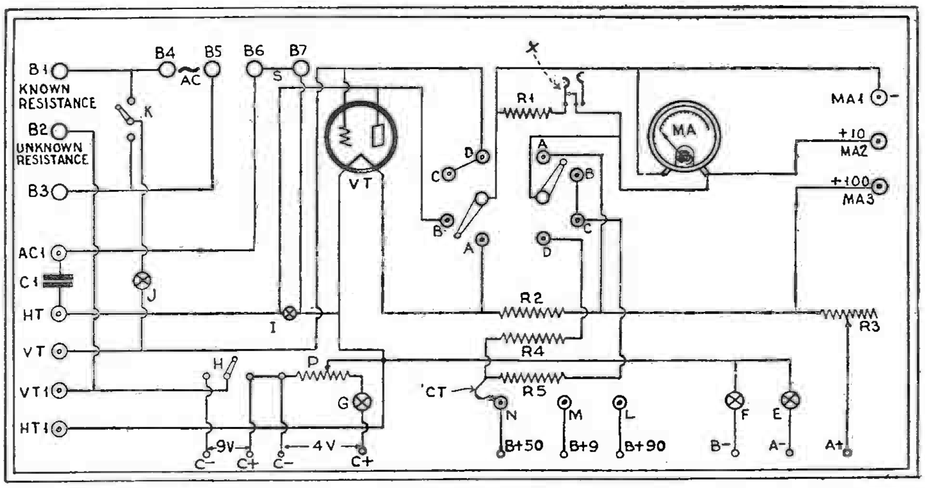

Fig. 1

Schematic circuit of the Multi-Meter. Jumper S is seldom used, as indicated in Table I. The two blades of the bi-polar switch ABCD rotate together. C1 is a D.C. blocking condenser or a by-pass condenser. depending upon the test. Filament current of VT must always be 60 ma.

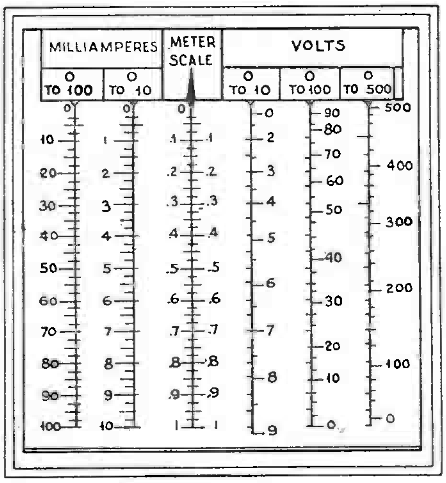

Fig. 2

The current readings are simply multiplied, but the voltage readings are reversed. A table of this kind should be made to calibrate the Multi-Meter.

switches (F), (G), (H on "C—9"), (J), (K on B1 side); connect cord tip CT to "B+90" tip jack, and strap binding post (B1) to (B2). Then put MA into circuit on the 0-1-ma. scale by pressing (X), and adjust potentiometer (P) until meter reading drops to .05-ma. On the 10-volt scale this setting is always taken as the *zero* point, and the Multi-Meter will be functioning as a true vacuum-tube voltmeter, indicating an increase of plate current from .05-ma. upward; as positive potentials up to 10 volts, on the grid, counteract the negative bias necessary for a zero-point plate reading of .05-ma. An A.C. transformer of 12- to 14-volt secondary is shunted by a 400-ohm potentiometer, the arm and one side of which are connected to (VT) and (VT1. An A.C. voltmeter of suitable scale is connected across the same terminals. Beginning with ¼-volt on the A.C. instrument, vary the external potentiometer in ¼-volt steps, taking down the reading of MA. This procedure is carried out over the entire 10-volt scale.

To calibrate the 0 to 100-volt scale, shift multi-point switch to position "C." Place the cord-tip lead in "B" battery jack (M). Close switches (E) and (F). Open switches (G), (H) and (J) and set (K) at (B1). Open the bypass-condenser shunt (S). The tube should previously have been set to draw just 60 milliamperes on the filament, using the multi-point switch position "A." Close switch (I) to get the "full-scale" deflection of the meter ("X" open); this establishes the *Zero* for this scale, Now open switch (I); as the calibrating voltage applied to (VT) and (VT1) is increased, the meter deflection will be downward or toward the meter *zero* point. In other words, for the maximum measured voltage the meter indication will be near zero. Using any source of direct-current supply and a D.C. voltmeter of suitable scale, connected with its "+" to (HT1) and its negative side to (HT), the voltage is varied as before, but in steps of ten volts. The calibration meter need not be of the 1000-ohm-per-volt grade, but it should be remembered that the accuracy of the multi-meter depends on the accuracy of the calibrating meter. The "Short" switch is used in making the reading, as described before.

For calibrating the meter to the 0 to 500-volt scale, the positions of the switches are the same as used for the former scale; with the exception that the multi-point switch is placed on position "D" and the cord tip in jack (N). The high scale may be used also for measuring high-tension A.C. voltages in the same manner, but using the jacks (AC1) and (HT1) with alternating current on the terminals. Calibrate in 20-volt steps. Assemble various calibrations on a single scale, as in Fig. 2.

The accompanying table (1) gives the procedure of taking measurements.

A Complete Tester for the Service Man

THE tester described, and shown schematically in Fig. 2 was constructed, at a moderate cost, to replace one which had been found out of date and inadequate for the proper servicing of modern, complicated receivers. That shown here is capable of making all the various voltage and current measurements at the socket terminals, measuring the filament emission of a full-wave-rectifier, testing continuity and condition of circuits, and testing all tubes, including the screen-grid type in use as either screen-grid or space-charge amplifier.

Two meters were available—an A. C. voltmeter and a 0-1-scale D.C. milliammeter. As the latter has an internal resistance of 27 ohms, a parallel resistance of 3 ohms was required to give a 10-ma. reading with the latter. Carter fixed filament resistors were used. Shorting about a quarter of the turns of an 0.4-ohm resistor (with solder) produced an 0.3-ohm shunt, to give a 100-mil. reading.

High resistors, guaranteed accurate within 1%, were obtained in values of 10,000, 100,000, 200,000 and 500,000 ohms. Using these in series with the milliammeter pro-

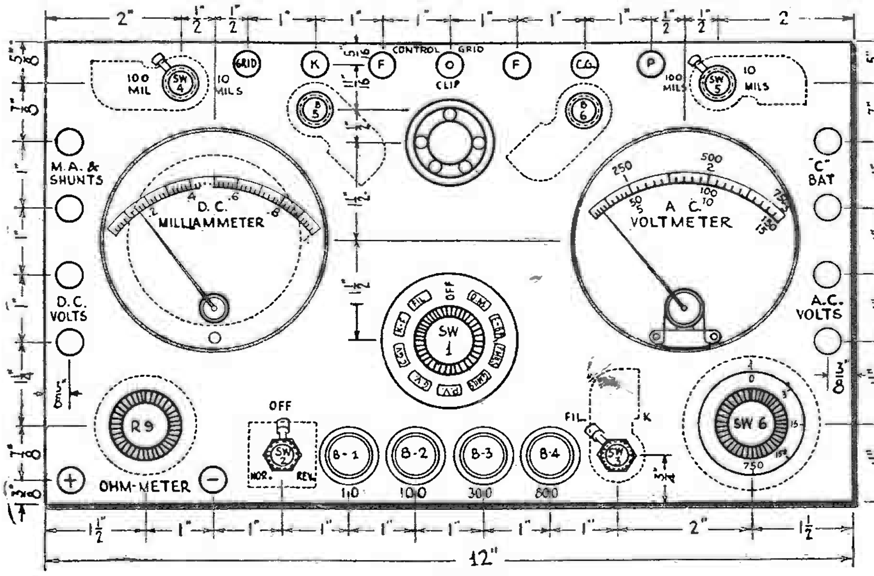

Fig. 1

The panel appearance of the very complete tester

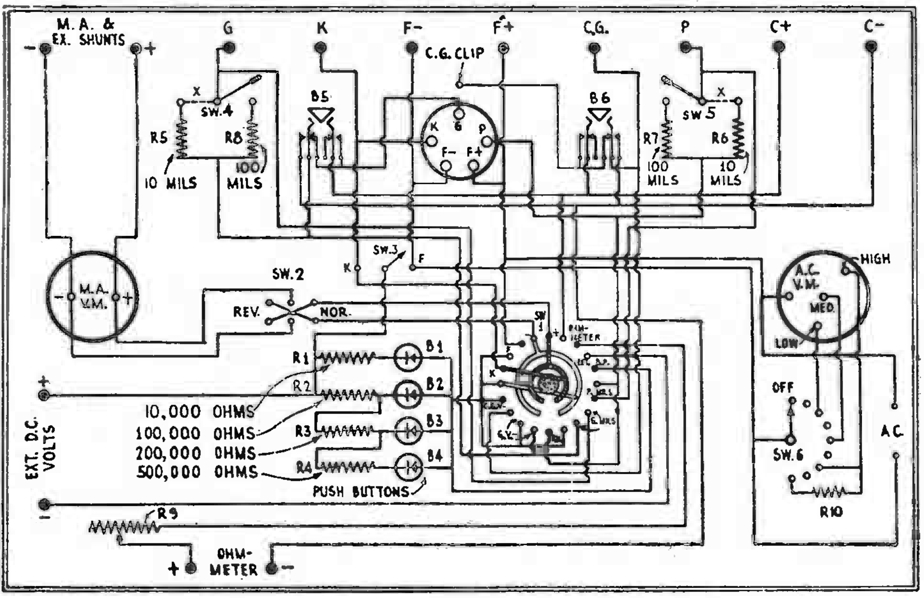

Fig. 2
The versatility of the meter at the left is obtained by the switches and resistors shown above.

duced a high-resistance D.C. voltmeter, with ranges of 0-10, 0-100, 0-300 and 0-800 volts; sufficiently accurate for all practical purposes, with but 1-ma. current consumption for a full-scale reading.

An ohmmeter circuit was also provided; the "C" battery was isolated from the various circuits except through the push-button B5 and the bipolar switch. It is also available for use in the conventional grid-swing test, as used in several commercial analyzers.

The bipolar switch, with its auxiliary switches, permits reading all voltages and currents at the socket under operating conditions; it isolates the circuits so effectively that the same resistors are employed for all D.C. voltage measurements. These are read on four convenient ranges, and return to the S.P. D.T. switch Sw3, which determines the return to the negative filament or the cathode, as the tube under test requires.

In a D.C. receiver, where the filament voltage is read with Sw2 in reverse, the apparent grid voltage is the sum of filament and grid voltages, since the grid return is to the positive side of the filament.

Control-grid and screen-grid voltages are read with the bipolar switch in position 4; grid bias with Sw2 in the normal position. As screen-grid voltage is positive, the reversing switch is used. Control-grid voltage, usually negative, can be read with the bipolar in position 3 and Sw2 in normal. If the meter tends to read backward, it appears that the tube is used as a space-charge amplifier, and the control-grid has a positive bias. Sw2 should then be reversed.

Cathode voltage is read with respect to the heater; Sw3 should be placed on the filament side for these readings. In an A.C. receiver, in which the cathode is grounded through the grid-bias resistor, and the heater also grounded, the cathode will read positive; in others, the heater is connected to some positive potential, and Sw2 is placed in reverse to read the cathode voltage. If the cathode is connected directly to the heater, no reading can be obtained.

Plate voltages are read in position 5 of the bipolar, with Sw3 on the filament side. In positions 6 and 7, the milliammeter is used to measure current. The unusual method of mounting the shunts on Sw4 and Sw5 permits its insertion in the grid and plate circuits, still retaining the continuity of these circuits from the previous voltage readings; thus obtaining all measurements under operating conditions.

Protection for the Meter

An element of safety is also introduced in this manner; with ordinary care, there need be no danger of overloading the instrument. However, if it is desired to use the 0-1-ma. scale in these positions, the wires shown dotted as X and X may be omitted. Switches with neutral or off positions must then be provided. If the wires are omitted, the shunts would no longer be in position for the 100-ma. reading of Sw4 and Sw5; a new value of 0.27 ohms would then be necessary.

The screen-grid current and that of the second plate of a full-wave rectifier may be measured on position 6 of the bipolar; on position 7, the plate current of all other receiving tubes can be taken.

Grid-swing tests may be made on position 7; depressing push-button B5 connects the 4½-volt battery in the grid circuit of the tube, and alters the bias to that amount. The difference between the plate-current readings before and after determines the value of the tube. A screen-grid tube is tested by depressing B6. The meter may be inserted in the screen-grid and the plate circuits, respectively, and a measurement obtained in each. If the tube is used as a space-charge amplifier, B5 should be pushed.

External Measurements

On the eighth position of the bipolar switch, the voltmeter is available for external measurements; the desired range is selected by pressing the appropriate button. On the ninth and last position, the ohmmeter circuit becomes available.

External shunts have been provided also; for a 5-ampere reading about 10¼ inches of No. 18 bell wire was used. Calibration is desirable, if not essential; supply houses are usually very accommodating in this way. A rough way of increasing the range of the milliammeter is to measure the filament current of a '99 tube; this should draw 63 milliamperes at 3.3 volts.

The operation of this tester, it will be seen, is simple, requiring only the care ordinarily used with any costly measuring instrument. Depressing a higher-range push-button first when taking voltage readings, and checking Sw4 and Sw5 before inserting the milliammeter in the grid or plate circuits, are precautions which will avert the danger of overloading or damaging the meter.

The general construction is indicated by the layout (Fig. 1) which is designed for the parts specified; but it may be altered to suit the constructor's available equipment. Those used by the writer were:

List of Parts

One bakelite (or hard-rubber) panel, 7 x 12 inches;

One Weston "Model 301" milliammeter, 0-1 scale;

One Standard A.C. voltmeter, three-range;

One Weston bipolar switch, Sw1;

One Carter "No. 33" D.P.D.T. jack switch, Sw2;

Three Yaxley "No. 730 Junior" S.P.D.T. switches;

One Marco 9-point sub-panel-mounting inductance switch;

Four "Super-Akraohm" or "Super-Davohm" resistors: 10,000 ohms, R1; 100,000 ohms, R2; 200,000 ohms, R3; 500,000 ohms, R4.

Four Carter Type H fixed resistors; two 3-ohm, R5 and R6; two 0.4-ohm (see text) R7 and R8;

One Pilot "Resistograd," R9;

Four pearl push-buttons, B1-2-3-4;

Two Yaxley No. 2006 D.P.D.T. push-buttons, B5-B6;

One Na-ald No. 423 UY socket;

One 4½-volt "C" battery;

Seventeen binding posts, four pairs grid-leak clips, a six-wire cable, and the necessary adapters.

AN EMERGENCY BATTERY

RECENTLY, the writer was called out of town to service a battery-model console radio set. Upon arriving, a day ahead of the promised date, I found that the storage battery had been taken away to be recharged, and it would be returned early the next day. The idea of coming back the next day over the rough country road was unpleasant; and that of using the car battery seemed the solution.

Upon trying to loosen the clamps on the battery, it was found that they were too tight; the pliers would never loosen them, and the required wrench had been left home. Having a roll of No. 14 rubber covered lead-in wire, I drove the car as close as possible to the window nearest the set; and the wires were connected to the battery terminals. In this manner six-volt direct current was obtained, and the set was tested and repaired in the usual manner.

A Home Made Slide Wire Bridge

Apparatus which will add to the experimenter's Laboratory the means of making many desired measurements

ONE phase of radio electrical measurements, which is too little discussed, is the measurement of resistances. Of course, "ohmmeters" are a familiar radio service tool in many kit bags—but not everyone can afford this complete resistance-indicator; nor even the milliammeter used in its construction. And besides, seldom are they sufficiently flexible to accurately cover such extremes of resistance as may be found between the partially-shorted voice-coil of a dynamic reproducer, and a grid leak of wrong value.

From past experience, I know that there are times when rheostats, grid leaks, and resistors generally, get mixed; the tags that are pasted on, or the painted markings, come off and the only way of determining their value is by guesswork. For these reasons, an article showing the construction of a measuring device should be of interest to every experimenter; particularly, if it may be constructed at little cost, and yet have a practical degree of accuracy.

The parts required are as follows:

Nine binding posts;
One brass strip, 3 x ½ x 1/16-in.;
One paper strip 36 x 1 in. (B);
One length of No. 22 resistance wire, 4 ft. long (C);
One S.P.S.T. switch, (D);
One baseboard 4 x 26 in., (E);
One small compass, (F);
One compass block 3½ x 2¼ in., (G);

To hold the compass (F) a hole is bored in the block (G) in the middle of the narrow width and as near the end as practical; leaving about ¼-in. from the edge of the hole to the edge of the block. The hole should be bored just deep enough to leave the face of the compass flush with the surface of the block. Drill two holes on the opposite end for the binding posts, (8, 9). Place the compass in the hole and wrap about ten turns of No. 22 D.C.C. wire directly over the center of the compass, in the manner shown in Fig. 1. Bring the two ends to the binding posts. Apply a coat of shellac to the wire to hold it in place. The result is a "galvanometer."

The next step is the assembling of the "Wheatstone bridge" proper. Drill three holes in the brass strip; one ⅜-in. from each end, and another directly in the center. The size of each hole is 3/32-in.; or large enough to pass a bolt for the binding posts (1, 2, 3). Then, drill holes in the baseboard for binding posts 4, 5, 6, 7. Mount the brass strip, ½-in. from the end of the base. Measure off 40 inches of No. 22 resistance wire, 4 inches longer than the paper scale; two inches at each end are allowed for connections. Fasten the two ends under the binding posts, as illustrated, with a small wire nail and draw the wire tight, without stretching, to form a long "V", then, drive the nail into the baseboard in the approximate center. Cut the paper in half, or at 1-1; and paste it beside the resistance wire; the scale provided in Fig. 3 may be copied on it, and will serve to eliminate most of the figuring required with a 0-100 scale, more commonly used.

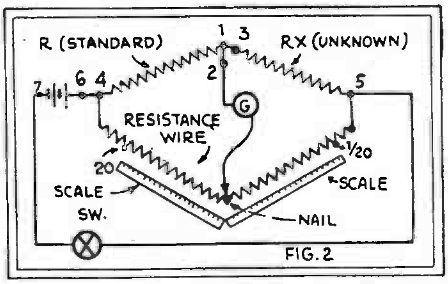

FIG. 2

The familiar Wheatstone bridge circuit, showing schematically (not in structural arrangement) the principle of the device described here.

When measuring small resistances, a low value of known resistance is used, and the same relation applies to a large resistance by using a high, known resistance. Low resistances may be made; but high resistance units should be of the manufactured type; and guaranteed accuracy.

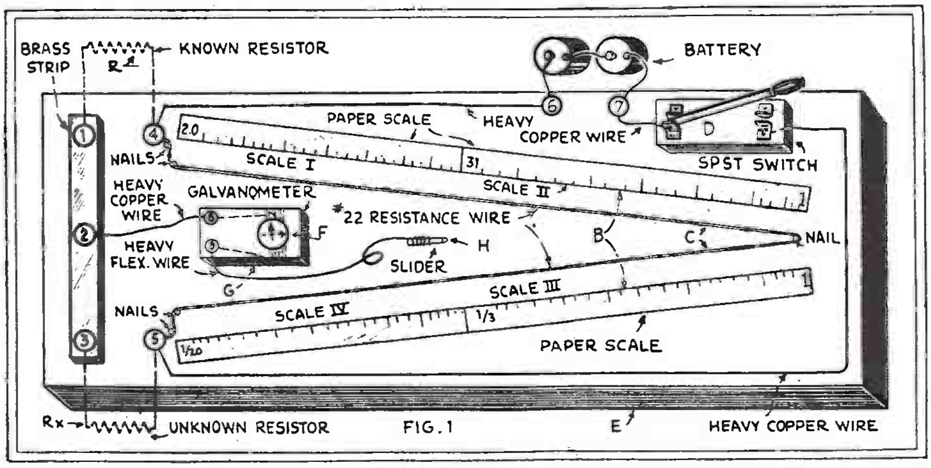

FIG. 1

The lay-out of the slide-wire bridge; it will be seen that practically no expense is incurred in its construction with the home-made meter used. Fine copper wire might be used for C, except for its mechanical weakness; but it is desirable to have a standard resistance value at R to start from.

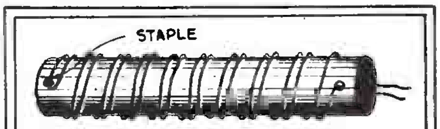

FIG. 1-A

In order to make a non-inductive resistor, the value of which can be closely determined, use fine wire in a double-winding.

When making a resistor, care should be used to construct a *non-inductive* unit. For example, a 100-ohm non-inductive resistor would be made by winding 72½ in. of No. 34 resistance wire on a tube about ½-in. in diameter and 6 in. long. The wire is first doubled into half its full length, the loop caught over a pin, and the two strands wound as one, as shown in Fig. 1A. About ½-in. is allowed on each end for connections. The resistance of No. 34 wire is 16.6 ohms per foot. Attention is called to the fact that this resistance wire seldom is insulated; and care must be taken to keep the turns from each shorting.

For measuring small resistances (of about 10 ohms) cut a piece of No. 34 resistance wire about 7¾ in. long and connect it to the proper binding posts; letting it hang in place, as this length of the wire is sufficiently stiff to be self-supporting.

All connections should be kept as tight as possible; so that the least possible amount of resistance will be added at these points. "A straight line is the path of least resistance."

To make the slider H cut a piece of No. 14 copper wire, preferably stranded, just long enough to reach the length of the mounting board. Get a small piece of No. 10 or No. 12 wire, about 2 in. long, and solder it solidly to the stranded wire. Wrap the connection with friction tape. When soldering, use only resin as a flux to prevent the slight corrosion that would occur if other flux was used. Use a hot iron, (not red hot) and clean the joint with alcohol.

Before measuring a resistance, arrange the galvanometer so that the coil, as wound over the compass, points in the same direction that the needle normally would—that is, toward the earth's magnetic poles. (As in Fig. 1). Then, when the current is sent through the coil, the magnetic field established will deflect the needle and the needle will try to arrange itself at right angles to the coil, as indicated by the dotted needle. Connect the known resistance between 20 and the brass strip (posts 1 and 4), and the unknown resistance between 1/20 and the brass strip (posts 3 and 5).

After the galvanometer has been properly arranged, close the S.P.S.T. switch D and touch the slider to the No. 22 resistance wire, note which way the compass needle is deflected; then, on the opposite side of the scale, touch the wire again and, if the needle is deflected in the opposite direction, the point of balance lies between the two points touched. For example, first touch the slider to 5, and note the direction the needle is deflected. Then touch the slider at 0.5; and note the direction in which the needle is deflected. If in the opposite direction, the point of balance lies between 5 and 0.5; if in the same direction, the point of balance will be found either between 20 and 5, or between 0.5 and 1/20.

When the slider strikes a balance on the scale lower than 1, the unknown resistance will be less than the known resistance; and when the point of balance is above 1, the unknown resistance will be higher than the known resistance. The known resistance, in either case, is multiplied by the reading on the scale.

As the slide-wire used for two of the legs of the bridge is very small, it is necessary to be careful and avoid excessive wear. For this reason the slider should be *touched* to the wire at various points, to obtain readings—not slid along its length.

Practically every electrical handbook discusses the slide-wire bridge. Therefore, the constructor will find numerous examples which may be studied, after he has built his bridge for experimental verification of his figures.

After you become familiar with the workings of the bridge, it can be operated in a very short space of time.

One advantage in the use of a carefully-made bridge is the convenient determination of such elusive radio receiver faults as leakage and shorted turns, sometimes found in R.F. coils. In particular, it is sometimes difficult to determine whether a voice-coil having a normal resistance of only 15 ohms has a short across only three or four turns; unless some such arrangement as the bridge is available for checking against a voice-coil of similar type which is known to be good. In this test, the resistance of the good coil is the "known" value to be checked against the "unknown" of the other voice coil.

To Save Figuring

The scale given in Fig. 3 has been carefully computed, to save the user of the slide-wire bridge a great deal of the figuring which would be necessary with the conventional 0-100 scale. If it is used with a known resistance R of a value of 1, 10, 100, 1000, etc., ohms; the values may be read directly from it. Its accuracy is greater than that which is likely to be obtained in the set-up of the apparatus.

It is 36 inches long, and intended for use with a 40-inch length of resistance wire, which is doubled back at its electrical center—the point 1 on both sides of the scale. The two sections I and II are continuous, and represent, as in Fig. 1, the upper side of the scale, where the value of the unknown resistance Rx is higher than that of the standard resistor R. The value of the latter is therefore multiplied by the number on the scale at which a balance is obtained on the slider.

The sections III and IV are also continuous, but reading back from right to left (if the constructor wishes to use a continuous length of resistance wire, he can mark off these divisions in reverse on a straight 36-inch scale). Here the known resistance is also multiplied by the scale reading, but it is in this case a fraction less than one, as the unknown resistance is the smaller. From 99 to 10, the scale readings are in percentages; below 1/10 they are common fractions.

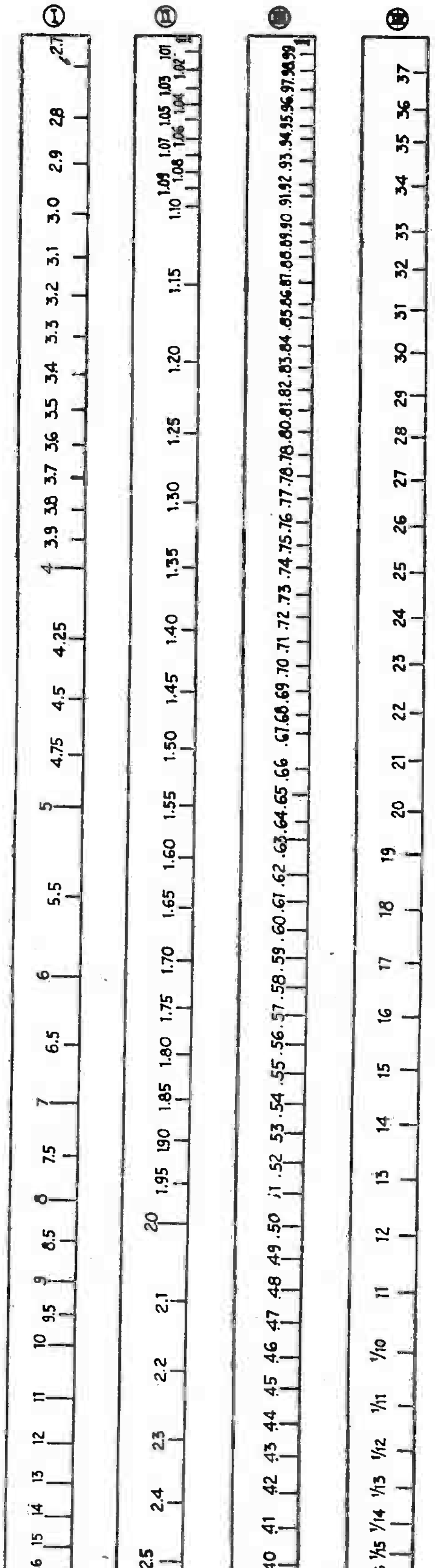

Fig. 3

The calibrations on this scale indicate directly the ratios between the two sections of a 40-inch resistance wire, when the two figure 1s are at its center; reading up on I and II, and down on III and IV. The markings may be transferred to the experimenter's own chart.

While the scale divisions might have been carried further, there is hardly practical value in doing so with apparatus as simply designed as the above. The sensitivity of the circuit will depend upon that of the galvanometer used; and the accuracy of the reading on the lowest attainable figure of the resistance in the connections and leads of the bridge.

Before the scale is permanently attached; it will be well to test the balance of the bridge with a number of resistors, not necessarily of known value. By placing one at R and another of considerably higher or lower value at Rx, one reading is attained. They are then interchanged, and a second reading is taken. If the two readings, multiplied together, equal 1, the bridge is well-balanced; otherwise, some correction or compensation will be needed.

From one resistor of accurately-known value, it will be possible to calibrate a set for ordinary purposes of the experimenter's shop. The attempt should not be made, with this bridge, to measure ratios too high; for reasons pertaining to the external circuit, particularly with low resistances. While the scale will measure a resistance 20 times, or 1/20th, that of the standard, inaccuracies creep in more regularly when working at either end.

Commercial resistors within 5% of their rating are not expensive; those accurate to a greater degree are expensive in proportion to their degree of precision. However, measurements cannot be more accurate than the meter.

Incidentally, the experimenter might find a suggestion in using a standard vacuum tube in a socket whose filament prongs are connected across R. A '26 tube, for instance, has a filament resistance of 1.43 ohms; an '01A, of 20 and a '99 of 52.4, nominally. A variation is allowed in manufacture; but a number of tubes might be tried, and the one nearest the average used as a test resistor, for low values.

Below are some figures which may be of use to the experimenter as an indication of the resistance of certain standard wires:

TABLE I

Resistance in Ohms of 40 Inches of Wire

Gauge	Nichrome	Con.	Iron	Copper
14	0.48	0.24	.06	.008
16	0.77	0.37	.09	.013
18	1.25	0.60	0.15	.020
20	1.95	0.97	0.22	.032
22	3.12	1.53	0.37	.051
24	4.95	2.44	0.60	.081
26	7.91	3.86	0.94	.130

(Con. stands for constantin; the resistance of pure iron is about the same as that of nickel. These resistances, of course, may be slightly different in a short stretch; and current enough to change its temperature should not be applied to a resistance-wire standard.)

The R. T. A. Set Analyzer

The Design of a Simple, Effective Testing Instrument for Assembly by the Service Man Who Is to Use It

IN connection with the work of servicing radio receivers, the importance of accurate, labor-saving test equipment needs no discussion. The increasing complexity of modern radio equipment makes greater demands upon the Service Man, which can be met only with suitable professional equipment.

For this reason, it was found that a necessary adjunct to the course of the Radio Training Association was the design of a suitable set analyzer, meeting all the demands of modern servicing; with the construction, as well as the operation of which every student should be familiar.

After much consideration of the problems of efficiency in operation, the R. T. A. Set Analyzer illustrated here was designed for the purpose; and, at the request of RADIO-CRAFT, the details of its layout and construction are here explained for the general benefit of the servicing profession.

The instrument is to be assembled, wired, and tested by its future operator, giving him therefore valuable practical experience and insight into the principles by which each measurement is obtained.

Construction of the Instrument

The completed analyzer is housed in a neat black carrying case of professional appearance, the cover of which is held down by a pair of spring clips, and having a comfortable leather handle. The apparatus is mounted upon an engraved black panel, the front and rear of which are shown in Figs. A and B; this carries the three meters, selector switch, and necessary buttons, etc. In Fig. 1 the connections are shown; and the method of construction to be followed by the student is explained in logical order.

First, mount the 5-prong socket in the upper left corner and the 4-prong socket in the upper right corner. Now fasten the three toggle switches. Next, place the two push buttons in their places below the D.C. voltmeter. The metal tip jacks are now mounted in their places, and then the red and black-topped tip jacks. The selector switch is mounted in the lower center hole. It must be secured very rigidly and placed so that, when the knob is turned clockwise as far as possible, the white arrow will point to the first marking, which is "Plate Volts." Lastly, the three meters are mounted in their proper places. Each unit must be placed exactly as shown in the diagram, Fig. 1.

It is extremely important that all connections in the Analyzer be well soldered.

An interesting step-wiring plan has been worked out for the guidance of R. T. A. students. Make each connection in sequence, as follows: Connect point 5 to 9; 9-21; 5-39, 39-44; 6-17; 17-24; 6-37; 37-45; 1-3; 3-8; 8-10; 10-12; 1-42; 42-31; 31-33; 4-7; 7-41; 41-34; 34-40; 11-32; 32-36; 43-38; 38-48; 53-48; 47-19; 46-18; 50-52; 52-14; 29-27; 27-51; 51-13.

Now connect into circuit the two resistors and the cable. The red wire on the large resistor connects to 49 on the D.C. voltmeter; and the black lead, to 28. Connect 49-26.

Next, connect the small resistor into circuit; one end to 25 and the other, point 23, to 15. Connect 25 also to 22, and 22 to 16.

The five-wire cable is passed through the hole in the partition of the case and its separate wires are connected as follows: green wire to point 35; black to 37; yellow to 39; red to 2; blue to 1; and point 2 to point 20.

Two six-inch lengths of wire are each connected to points 54 and 47, the wires passing through the hole in the partition of the case. (The 4½ volt battery shown is not supplied with the analyzer.) Lead 54 is attached to its negative post, and 47 to the positive.

Pre-Service Testing

If a receiving set is not handy to test the completed analyzer, this may be done very easily through the use of a 22½-volt "B" battery. It must be remembered that the "30V" button of the D. C. voltmeter should be pressed to obtain a reading.

Connect the negative terminal of the battery to the grid prong of the plug; and the positive to the cathode prong. The D. C. voltmeter should indicate 22½ volts, with the rotor switch in the "Grid," "Screen-Grid," or "S.G.C. V." positions.

Next, connect the positive lead to the plate, and the negative to the cathode. The same reading should be obtained with the rotor switch in position "Plate Volts."

Fig. B (right)
Rear view of the analyzer's panel (reversed from Fig. A). The coil between the two meters and the UX socket, at the upper left here, is the scale multiplier for the D.C. voltmeter ("large resistor"); that at the lower right is the multiplier for the A.C. voltmeter ("small resistor").

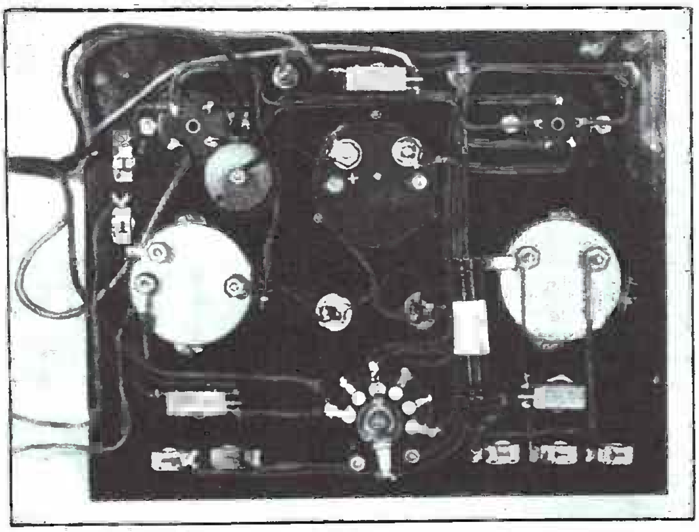

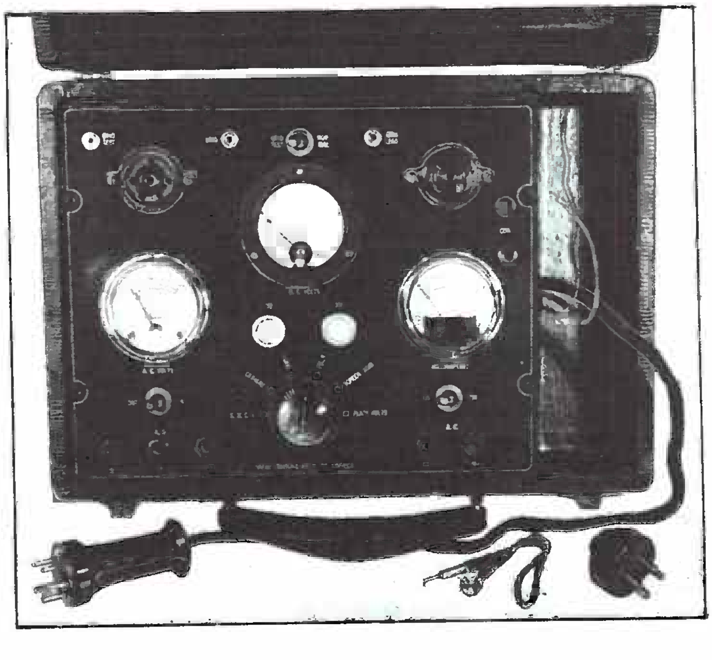

Fig. A (left)
Appearance of the R. T. A. set analyzer's panel, seated in the carrying case, with the accessories — plug, adapter, and screen-grid clip (carried with the 4½-volt battery in the compartment at the right). The meters are: upper, Hoyt No. 563 D. C. voltmeter; left, Readrite 0-10-140 A.C. voltmeter; right, Readrite 0-15-150 milliammeter.

Across the filament prongs, the meter switch set at "Fil. V." should indicate the same potential; also, when the positive terminal is connected to the positive filament prong, the negative to the cathode, and the switch set at "cathode."

The final pre-service test is made by connecting the negative lead to the plate connection of either socket, and the positive to the cathode. With the switch in the "Plate Volts" position the D. C. meter should read backwards; and the milliammeter should show a slight reading at the "15" position of its toggle switch.

Using the Analyzer

The primary function of a set analyzer is to enable the Service Man to check the electrical conditions, which exist at the successive sockets of a receiver, against the normal operating data, furnished by the manufacturer. It is advisable to check the tubes in their order, following the signal through the receiver; that is, begin with first R. F., second, etc.; detector, and then the audio stages in their order. Instructions will be given here, as to a student, for the benefit of younger radio workers.

To start the analysis, the first R. F. tube is removed and inserted into the socket in the tester, and the plug at the end of the cable is inserted in its place. A 5-prong plug is attached but, if the socket is of the 4-prong type, then an adapter with a 5-prong socket and 4-prong base is put to use. The set is turned on and the volume control adjusted for maximum.

First, the applied filament voltage is measured by turning the selector switch to the position marked filament volts ("Fil. V."). If the set is a D. C. battery-operated type, the push-button labeled "30" is pressed and the reading taken on the lower or 0-30 scale; but, if it is an A. C. set, then the A. C. voltmeter is cut in by throwing the switch to the side marked "in" and the reading taken on the lower or 0-10 scale. If no filament voltage is present, it is evident that the filament circuit feeding the first R. F. tube is open or shorted at some point.

Next, the plate circuit is checked up by turning the selector switch to the position marked "Plate Volts." The voltmeter button marked "300" is pressed, and the reading taken on the upper or 0-300 scale. If no plate voltage exists (as shown by a zero indication) the trouble may be a defective rectifier tube, or a break or short somewhere in the "B" supply circuit. If the plate voltage is low or high the line-voltage should be checked; the rectifier also may be weak.

The plate current also can be checked at the same time by reading the milliammeter. The switch is always left in the "150" position; but, if the reading is below 15, it is thrown to the "15" position, so that a more accurate reading can be obtained. (Important: As soon as the reading has been taken, the switch must again be returned to the "150" position.) If the plate current is low, it may be due to a weak or defective tube; the line-voltage may be low or the grid bias too high. Too much plate current may be due to excessive "B" voltage, to insufficient grid bias, to a defective tube, or to a high line-voltage.

Control-grid bias or "C" voltage is determined by moving the selector switch to the position marked "Grid," and pressing the voltmeter push-button labeled "300." If the reading is less than 30, the button marked "30" is pressed so that a more accurate reading may be obtained. If the "C" bias is too high, it may be due, in general, to a grounded grid connection, an open grid circuit, or shorted bypass condenser. If the "C" bias is too low, this may be due to an exhausted "C" battery, a defective grid-bias resistor, wrong line-voltage, or a defective tube, in most cases.

If the tube under test is of the 5-prong type, then the cathode is the next circuit to be checked, by turning the selector switch to the position marked "cathode." The voltmeter button marked "30" is pressed, and the reading taken on the lower scale. If the reading is materially different from the specified value, it is evident that the biasing resistor is shorted, either partially or completely. A break may also be somewhere in the circuit.

Screen-Grid Tube Tests

In the case of screen-grid tubes, two other tests must be made; while a few changes are necessary. The tube is inserted into the 5-prong socket, and the control-grid at the top of the tube is connected (by means of the special cord that is provided) to the metal tip jack marked "Grid." The tip jack marked "Grid Lead" is connected by means of a wire to the connection in the set which was formerly made to the control-grid on

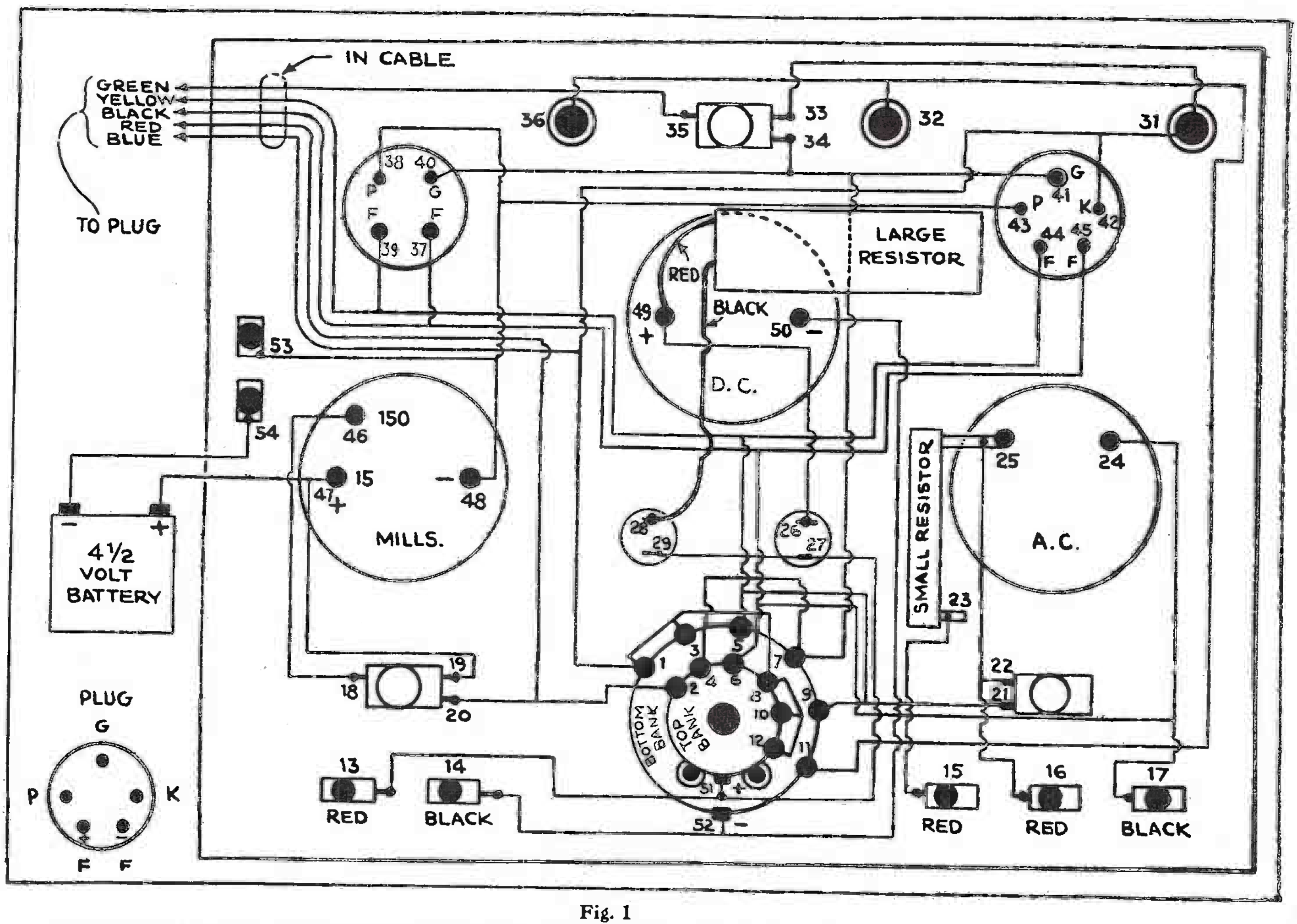

Fig. 1

The schematic circuit and wiring connections (explained in the text) of the R. T. A. Set Analyzer; the arrangement of parts corresponds to that of Fig. B, while the buttons, jacks and switches are shown from the upper side of the panel (in reverse order) in Fig. A. The connections of the selector switch are indicated at the lower center. The end view of the plug (lower left) corresponds to the bottom view of the UY socket.

the tube.

The first of two tests is the bias on the control-grid, which is obtained by turning the selector switch to the position marked "S.G.C.V.," and pressing the voltmeter button. (Always press the button labeled "300" first, to make sure that the reading does not exceed 30.) When this has been done, the other button can be used and the bias read on the lower scale. If the value indicated is not correct, the trouble will be due, ordinarily, to a defective grid-bias resistor, a defective tube, a grounded connection, or a shorted condenser.

Second, the voltage applied to the screen-grid is checked by turning the selector switch to the position marked "Screen-Grid" and pressing voltmeter button "300." If the indicated value is not correct, a thorough check-up should be made.

This completes the analysis of the first R. F. tube socket; if everything is found as it should be, the tube is returned to the socket and the same tests repeated with the succeeding tubes.

Of course, there are a number of faults which cannot be uncovered in the above analysis, such as an open center-tapped resistor, defective detector tube, wrong speaker connections, defective output transformer, poor speaker, shorted variable condenser, poor grid leak, open by-pass condenser, microphonic tubes, defective grid resistors, or a poor ground connection. These, however, can generally be located by the use of the continuity tester which will be described later.

DO NOT under any circumstances make the mistake of inserting the analyzer plug into a rectifier tube socket, or the D. C. voltmeter will be damaged. To determine whether the rectifier tube is in good condition, the plate voltage on the last audio tube should be measured. If the plate voltage is normal, the rectifier is evidently in good condition. However, if the plate voltage is low, the rectifier in use should be replaced with a new tube known to be good. If, upon placing a new tube in the rectifier socket, the voltages rise to their normal value, it is an indication that the first rectifier was defective and should be replaced. If the voltages do not rise, the trouble is undoubtedly due to some cause other than the rectifying tube.

The "Grid Test"

The real value of a tube as an amplifier is not given by the amount of plate current flowing, but by the amount of change in plate current caused by a given change in grid voltage. For this purpose, it is common practice to observe the plate current under operating conditions, and then make the grid more positive by reducing the negative "C" bias. This is known as the "grid test." The plate current will increase, and the amount of increase determines the quality of the tube.

The "Grid Test" is applied by throwing the upper switch, first to "Normal" and then to "Grid Test"; and taking the difference of the readings. Screen-grid tubes are tested with the control-grid cord in the "Grid" and "Grid Test" jacks, respectively.

The above discussion explains the use of the analyzer when the chassis of the radio is in the cabinet. By the use of the red and black jacks on the lower edge of the analyzer panel, the D. C. meter and the A. C. meter may be used externally. To test batteries, a wire from the negative of the battery is placed into the black jack marked "—." A wire from the positive side of the battery is placed into the red jack marked "300." First press the "300" voltmeter button and, if the voltage of the battery is less than 30, the "30" push-button. To measure line-voltage, wires from the A. C. power line are connected into the "—" black jack and the red jack "140." The voltage is read on the 140-volt scale of the A. C. meter. To use the 0-10-volt scale on the A. C. meter, wires are placed into the black "+" and the red "10."

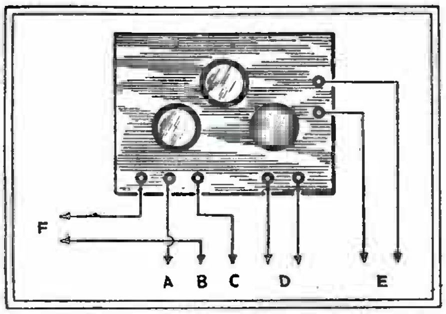

Fig. 2

The external connections of the set analyzer, through the jacks, permit continuity, resistance and capacity tests.

External Measurements

A continuity tester for the location of open resistors, shorted condensers, poorly soldered connections, etc., is available simply by plugging two wires into the two black jacks on the right side of the analyzer (as indicated in outline in Fig. 2).

By referring to Table I, the resistance of the circuit in ohms can quickly be found. For example, if the meter pointer indicates 2.6-milliamps, the circuit under test has a resistance of 1500 ohms. Any resistor between the value of 25 ohms and 5000 ohms can quickly be tested in this manner.

When it is desired to test batteries or power supplies, the separate connections to the D. C. voltmeter are made across terminals D.

In testing condenser capacities, B and C are connected to the unit under test, and 110 volts A. C. is impressed on F; the capacity is then found from Table II. If the condenser is found to have more than four microfarads capacity, terminals F are then put under 5 volts A. C., and the values are found from Table III. The necessary voltage can usually be obtained from a receiver.

If the condenser gives a full voltage reading, it is evidently shorted, and should be replaced. However, electrolytic condensers cannot be tested with alternating current; because they are designed for a D. C. voltage of constant polarity.

The components of the analyzer, in addition to its carrying case and engraved panel with the three meters and their resistors, are: a 5-wire cable, with plug; adapter plug; UX and UY tube sockets; the bi-polar 6-point selector switch, with knob; one 2-terminal and two 3-terminal toggle switches; two push buttons; three metal, three red-top and four black-top tip jacks; an 8-inch screen-grid test cord, seven soldering lugs and the other small hardware—wire, screws, nuts and bolts.

TABLE I

Reading Mills.	*Ohms Res.*	*Reading Mills.*	*Ohms Res.*
14.0	25	5.3	600
13.8	30	4.8	700
13.5	35	4.3	800
13.3	40	4.0	900
13.0	45	3.6	1000
12.9	50	2.6	1500
12.0	75	2.2	2000
11.5	100	1.6	2500
9.4	200	1.5	3000
7.8	300	1.0	4000
6.8	400	.9	5000
6.0	500	.5	100000

15 Mills. indicates no resistance in circuit.
0 Mills. indicates very high resistance or open circuit.

TABLE II

Meter Reading Volts	*110-volt A. C. Test Capacity Mf.*
1.8	.5
3.0	1.0
4.5	1.5
5.4	2.0
6.0	2.5
6.5	3.0
7.0	3.5
7.1	4.0

TABLE III

5-volt A. C. Test	
Volts	*Mf.*
.5	4
.9	6
1.3	8
1.6	10
2.0	12
2.3	14
2.5	16
2.6	18
2.9	20
3.0	22
3.1	24

A MODULATED OSCILLATOR

"USE a modulated R.F. oscillator" is a common instruction. How many radio men can make one without a circuit diagram? Here is the one which I use for a great many purposes, with power supplied from "A" and "B" eliminators.

With a variable resistor properly adjusted in the grid circuit of the tube, this oscillator may be used to match condensers: the same capacity gives the same note. In a similar manner, resistors may be matched, R.F. transformers, impedances, etc. This may be used as a wavemeter, and calibrated from the beat notes of stations of known frequency. It can be used as either an R.F. or an A.F. oscillator separately. It produces a very sharp, powerful signal, and is very useful.

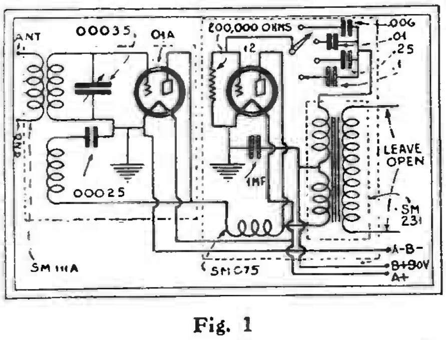

Fig. 1

We can assure the contributor that uncounted Service Men can make an oscillator, from the letters we receive. However, this is a good one.

The Radio Craft Universal Analyzer

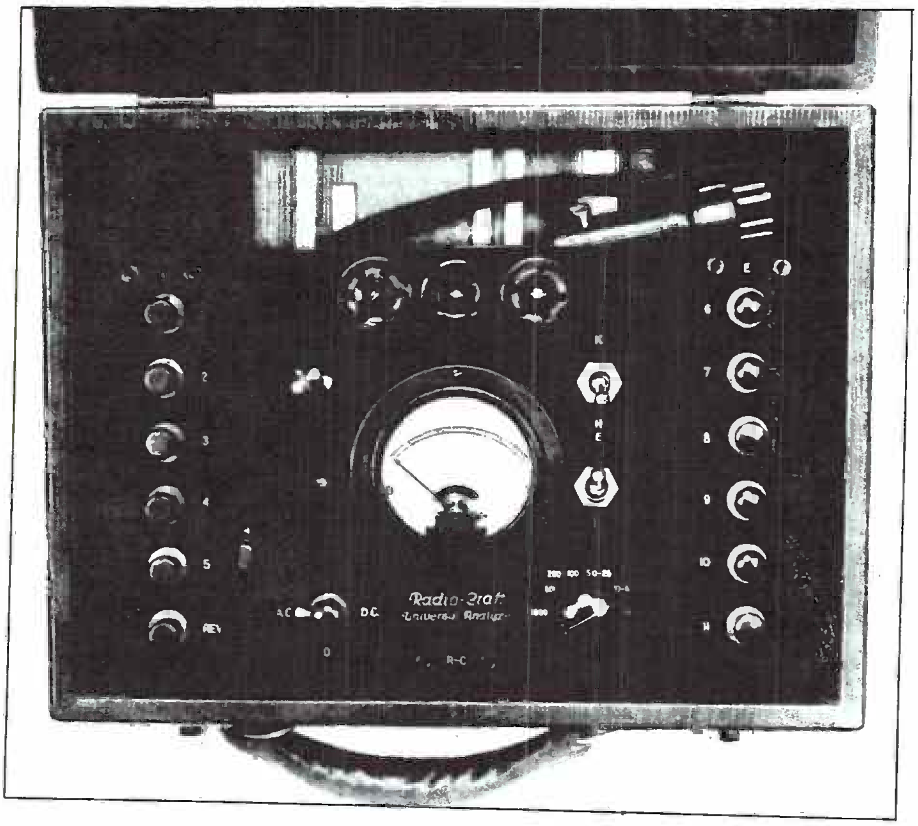

Fig. A
Front view illustrating the location of the push-buttons, meters, etc.

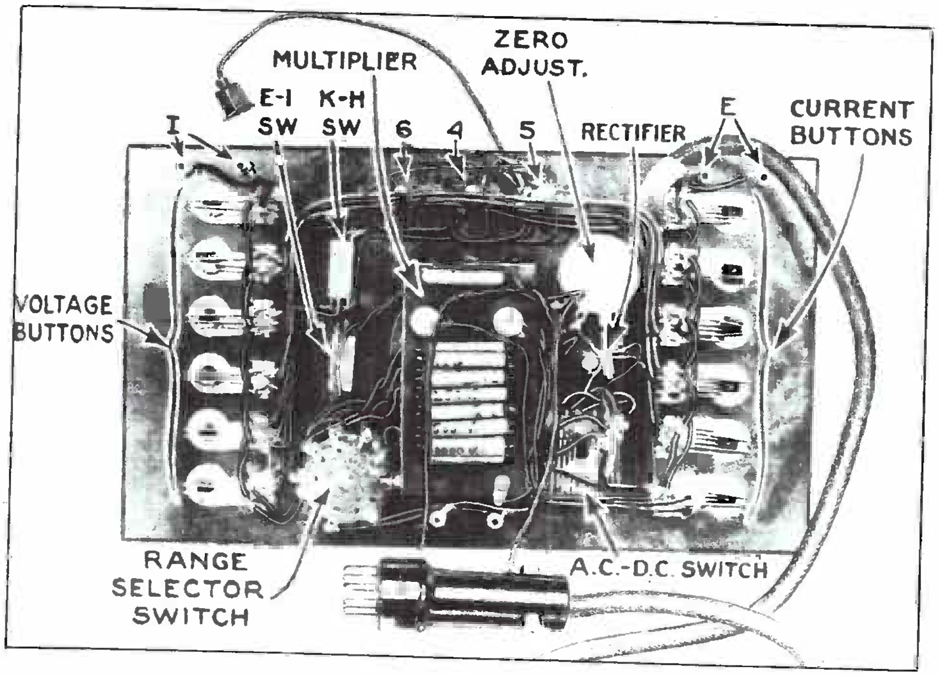

Fig. B
Rear view of the analyzer. Note the use of cable wiring and the use of the sub-panel, mounted on the meter, for holding the multipliers.

● For the past year we have been deluged with inquiries regarding constructional data of a modern set analyzer. To satisfy our readers, we have designed and constructed the RADIO-CRAFT Universal Analyzer described in this article.

It is universal in its use—hence its name—and is capable of testing any receiver using the latest tubes available and many which are not as yet available. It may be built for about $28.00 complete, and for the man who desires to build his own, we heartily recommend it.

MODERN radio receiver and tube developments placed new demands upon the radio set analyzer, especially since tube manufacturers have introduced the six (and perhaps the seven!) prong base. A glance at the July issue of RADIO-CRAFT (tube chart) will convince any Service Man that corresponding connections of the elements of different tubes vary widely. In most of the screen-grid tubes, the cap connects to the control-grid, while in the Wunderlich five-prong detector, the cap connects to the cathode.

This means (1) that a set analyzer designed for screen-grid tubes will not test the Wunderlich; (2) present-day analyzers have no provision for testing the pentode grid (now called suppressor) circuit; and (3) if adapters are used, a button marked *control grid* may have to be pressed in order to read the plate voltage on a particular tube. In other words, to bring the present-day set analyzer up-to-date, the entire analyzer must be rewired to handle not only existing tubes but with a minimum of labor, all future models. This is exactly what RADIO-CRAFT UNIVERSAL ANALYZER DOES.

Description of Our Analyzer

With the requirements for satisfactory and rapid servicing in mind, the staff of RADIO-CRAFT set about to design the tester illustrated in the accompanying sketches and photographs. Keeping in mind the fact that the average Service Man may be low in funds, the cost of the completed unit was carefully calculated, at the same time using the highest quality of parts, until a unit was developed costing about $48.00 *which was far less than expected by the Staff.*

A glance at the photographs will show that push buttons were used throughout, with the exception of the range-selector switch. This arrangement reduced the complexity of the wiring and the cost to a minimum.

Since any form of lettering for indicating meter connections could not be used because of widely varying socket connections, a numerical designation was decided upon. A glance at Figs. A, B and C will show this. Refer to Fig. A At the upper left-hand end of the panel are two tip jacks marked "I." These two terminals are for external current measurements. Directly under these tip jacks is a row of six buttons labeled from 1 to 5 inclusive, the last one labeled "REV." The first five numbered buttons *are for current readings only*, the "REV." button only reversing the connections to the meter when desired.

Directly to the right of the "I" tip jacks are three sockets, a six-, a four- and a five-prong. To the right of these and in line with the "I" tip jacks are two more tip jacks labeled "E." These tip jacks facilitate the external measurement of voltage only. Directly under them is a row of buttons marked from 6 to 11 inclusive. These buttons are for *voltage measurements when the instrument is used as an analyzer.*

At the lower edge of the panel, at the center, are two more tip jacks marked "R-C" which are for resistance continuity work. To the left and a little above the "R-C" jacks is a toggle switch marked "A. C." on one side and "D.C." on the other. This switch is thrown to the side corresponding to the type of voltage or current to be measured. Directly above this switch is a knob with an arrow on it. This knob is used to adjust the meter to full scale when resistance measurements must be made.

To the right of the meter are two toggle switches, one a "K to H" (cathode to heater) connection and the other an "E to I" switch. The latter should be thrown to the "E" side when voltage measurements are to be made and to the "I" side when current is to be measured.

Directly under these toggle switches is the range selector switch. The markings are as follows: 1,000, 500, 250—100, 50—25, 10—5, 5—1. When on the first or "1,000" tap, the range of the meter is 1,000 volts full scale (at 1,000 ohms per volt); when on the "500" tap, the range of the meter when used as a voltmeter is 500 volts and when used as milliammeter is 500 milliamperes; on the "250—100" tap, the voltage range is 250 and the current range is 100 ma.; on the "50—25" tap, the voltage range is 50 and the current range is 25 ma.; on the "10—5" tap, the voltage range is 10 and the current range is 5 ma.; on the 5—1 tap, the voltage range is 5 and the current range is 1 ma.

It should be pointed out that the above voltage ranges are for either D.C. or A.C., depending upon which side the "A.C.—D.C." switch is thrown.

Figure 1 is the diagram of connections. The six-prong cable is shown to the left and the set of switches shown directly to its right are the current buttons, drawn vertically. The switches drawn horizontally are the voltage buttons. The socket connections represent the location of the prongs when looking *down* on the socket from above. Two sets of voltage multipliers are used, one for A.C. and the other for D.C. as shown. In this manner the accuracy of measurement is maintained well below 5 percent for both A.C. and D.C. ranges. The remainder of the diagram is self-explanatory.

Figure 2 indicates the mechanical layout of the panel. All dimensions are given and the reader should have no difficulty in constructing this instrument. Reference should be made to the photographs when assembling the tester as they are clearly marked for this purpose.

Using the Analyzer

A.C. Measurements: Turn the switch marked "A.C.—D.C." to the A.C. position. The toggle switch marked "I—E" should be in the E position. This removes the current shunts from the meter circuit and reduces possible danger. For example, if the operator should push one of the current buttons (Nos. 1 to 5) no indication will appear on the meter scale.

Be sure that the voltage range selected for the test is *greater* than the voltage present in the circuit. It is best to start with the 1,000-volt scale and then change to the scale which gives a reading in the center of the dial.

Do not try to read D.C. voltages on the meter when the A.C.-D.C. switch is on A.C.

The voltage scales on the meter are indicated with heavy black lettering and the A.C. scale is laid out above the center arc with a compensated scale to correct for the non-linear action of the rectifier. As one becomes familiar with the scale, its simplicity and accuracy will be appreciated.

D.C. Measurements: Turn the switch marked "A.C.—O—D.C." to the D.C. position. The toggle switch marked "I—E" should be in the E position. This removes the current shunts as described in the section above.

It is impossible to read A.C. voltages on the D.C. scale because the rectifier is removed from the circuit.

Be sure that the voltage range of the meter is greater than the voltage present in the circuit. Start with the 1,000-volt range and work down until the reading falls near the center of the dial.

The D.C. voltage scales are located on the lower portion of the dial of the meter and there is no correction for them.

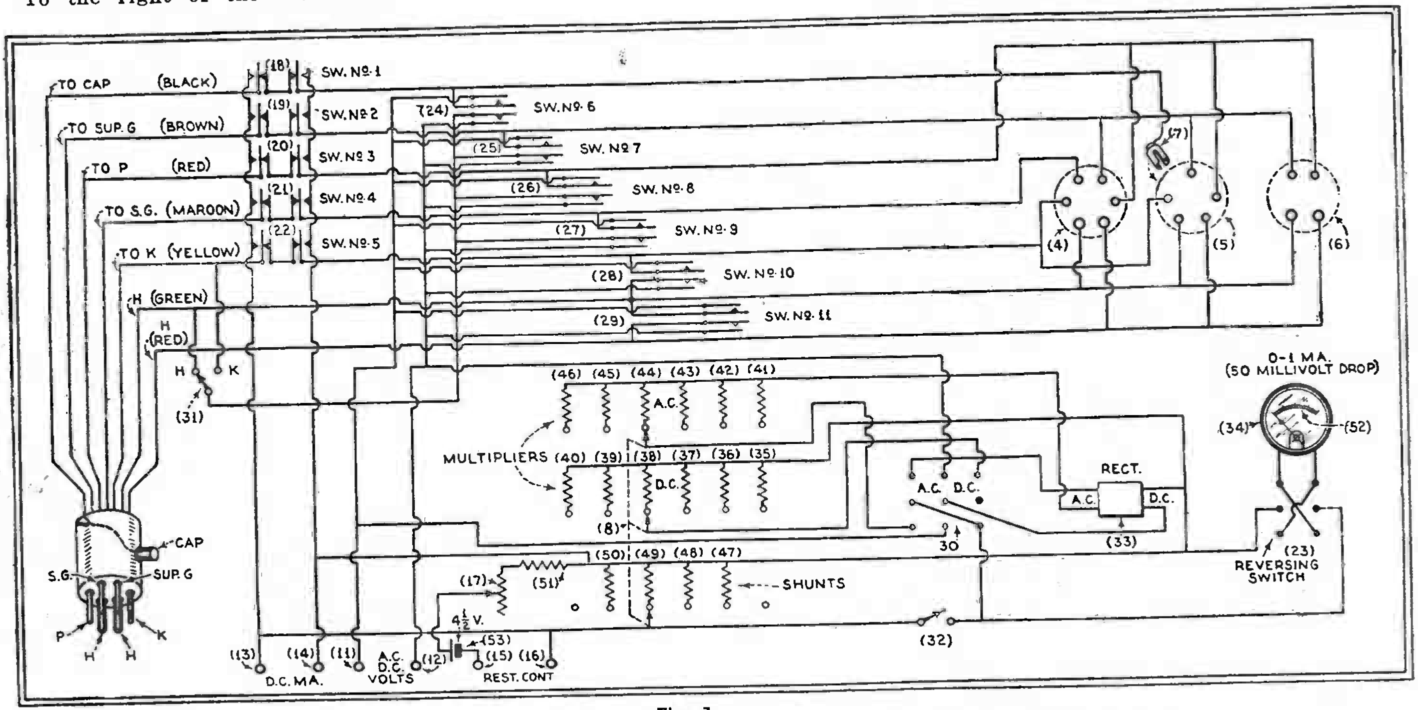

Fig. 1

Complete schematic circuit of the analyzer. The numbers in circles are parts numbers and their values are given in the article.

Fig. C
The RADIO-CRAFT Universal Analyzer in action.

The accuracy of the readings on the D.C. scales are limited by the accuracy of the meter, the multipliers and the ability of the operator to read it correctly. The selection of accurate resistors and good electrical connections between the parts are important considerations and should be handled accordingly.

Testing Radio Receivers: A 6-prong plug with a three-foot cable is used to complete the circuits between the receiver and the analyzer. If the receiver is equipped with 5- or 4-prong sockets, there are two adapters which clip to the 6-prong plug. One changes the 6-prong plug to a 4-prong and the other changes the 6- to a 5-prong. The clip connecting to the cap has a connecting point on the barrel of the plug.

When current measurements are being made, it is advisable to keep the three-way switch (The A.C.—O—D.C. switch is also called the A.C.—D.C. switch in this article) in the "O" position. By so doing, all the push buttons on the right-hand side are disconnected. Thus, if a current button and a voltage button are pressed at the same time there will be but one deflection—this deflection will be some value of *current*.

All readings necessary for the proper determination of circuit conditions can be found by pressing the proper numbered button on the analyzer after refering to the chart which lists more than 40 types of tubes, both old and new.

The fact that any voltage or current scale can be used in connection with any of the tube circuits permits of the greatest elasticity of circuit tests. For example, voltages up to 1,000 can be measured in the normal control-grid circuit of the tube under test. Also plate currents or grid currents up to 500 ma. if so desired. Any circuit of the tube can be measured provided the voltage and current ranges of the multipliers and shunts are not exceeded.

Resistance Measurements: The two black insulated tip jacks in the front and center of the panel are, as mentioned previously, for resistance and continuity measurements. The 4.5-volt "C" battery is used in conjunction with a 1,000-ohm rheostat and a 4,000ohm fixed resistor for continuity and measurement of resistors of values up to 100,000 ohms. A direct-reading scale is provided on the meter for this purpose; this is the upper scale on the meter.

To place this portion of the analyzer in operation, it is necessary to short-circuit the test prods connected to the tip jacks and adjust the reading of the meter to full scale. The voltage-current selector switch should be placed in the 1. ma. position. *If this is not done the readings will be false.*

WHEN USING THE METER FOR RESISTANCE OR CONTINUITY MEASUREMENTS DO NOT HAVE THE ANALYZER PLUG CONNECTED TO A RADIO SET.

While the design is such as to limit the possibility of the meter or rectifier burning out, care should be exercised at all times. The better the instrument the moroe ocoaoreofoulo onoeo sohouoldo obo more careful one should be.

Output Meter: The A.C. Voltmeter may be used as an output meter where such a device is required. The use of a voltmeter as an output meter is very satisfactory for testing and aligning the coil-and-condenser units in tuned radio frequency and superheterodyne circuits. A constant signal should be supplied to the receiver and the proper voltage range on the output meter selected. The normal ranges on the A.C. voltmeter are available for this purpose.

Construction

The panel is of black bakelite, 7 x 12 x 3/16 inches, and is drilled and engraved as shown in the mechanical drawing. All parts are mounted on the panel except the bakelite strip holding the resistors for the multipliers and shunts.

The resistors are mounted on this strip which, after the rest of the wiring has been completed, is fastened into place by bolting it to the large screw connections serving as terminals for the meter. This provides ample support for the resistor strip and locates the resistors near the selector switch.

All the voltage feed-wires can be made with No. 18 or larger copper wire. The insulation of this wire should be of the best. No leakage should or can be permitted between the wires if satisfactory operation is to be secured. The filament leads in the connecting cable should be No. 14 or larger to prevent large voltage drops in the leads.

Care should be taken in wiring the current circuits; use bus-bar for all connections between the selector switch, shunts and the meter. Use the largest and best insulated wire which you can obtain.

Keep the three-foot cable connecting the analyzer to the radio set in good condition. Use the best cable you can secure. It pays in the long run and reduces the actual error which will be found in long cables and leads that have high resistance.

Carefully clean every soldered connection with alcohol. Do not let dirt or poor connections interfere with success.

The box in which the Universal Analyzer is carried is large enough to provide space for storing the small 4.5 volt "C" battery used for the continuity and resistance measurements, the set analyzer plug, the cable and extra leads for additional tests.

The same pair of leads used for the continuity tests may be used for the output-meter connecting wires, and it is wise to have clips on the ends of these leads as it is sometimes difficult to make permanent connections to the average voice-coil or voice-coil transformer.

Naturally, the success of such a unit as this depends on the care used in the assembly and the quality of the materials selected. Considering the accuracy of the unit as a whole and the absolute flexibility of measurement, the cost in time, labor and materials certainly justifies itself.

Suppose it is desired to analyze a receiver. The plug of the analyzer cable is inserted into one of the tube sockets in the

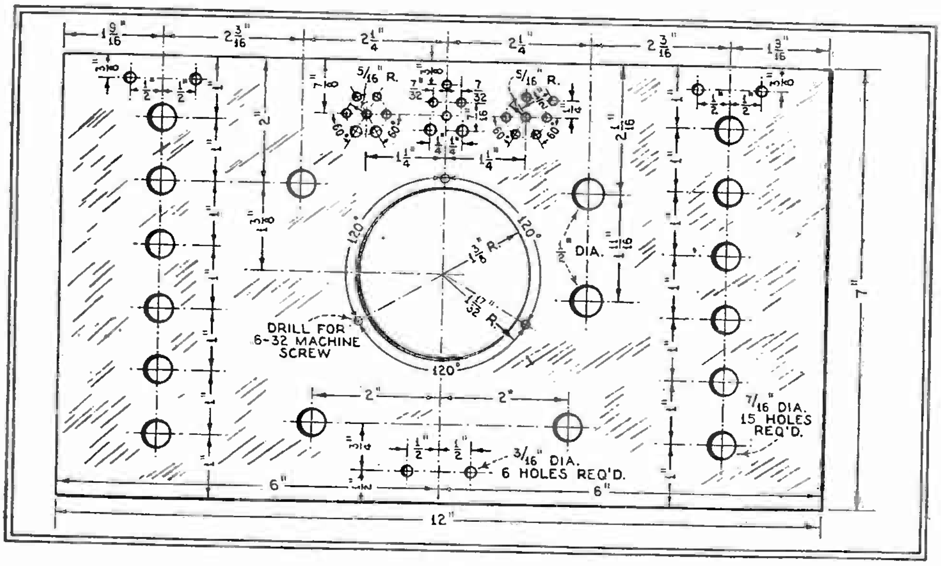

Fig. 2
Mechanical layout of the panel. The location of all the holes are clearly indicated. Of course, the dimensions are only valid if the parts specified are used.

receiver, the tube from the receiver is inserted in the proper socket of the analyzer, and the set is turned on. If, for instance, the tube is a '27, reference is made to the chart and the buttons that must be pressed to read plate, grid, and filament voltages are found to be Nos. 8, 7, and 11. In other words, pressing button 8 reads plate voltage on the type '27 tube, button 7 reads grid voltage, and button 11 reads filament voltage. Of course, when reading filament voltage, the A.C. side of the switch must be used. To read plate current on the tube, button No. 3 is depressed. The proper range is selected by means of the switch provided for the purpose and the "E—I" switch thrown to the "I" position.

At first glance it might appear undesirable to refer to a chart whenever voltage or current measurements are to be used. A little consideration will show that of the 47 tubes shown in the chart 43 require that button No. 8 be depressed to read plate voltage. About the same proportion holds true for the plate-current measurement.

It is in the case of special tubes that the extraordinary feature of the numbering system is appreciated. For instance, to read control-grid voltage, three different buttons must be pressed, depending upon the type of tube. If a single button marked "Control Grid" were used, the same button *would not always measure control-grid volts*. The confusion is obvious.

Hence, by means of the numbering system, the tester can never become obsolete provided tube manufacturers adhere to the general principles they have been following in the past, and we are of the opinion that no radical changes are contemplated in the near future

When using the chart, the following should be rigidly observed:

(1) The left column refers to the type of tube;

(2) All numbers in all other columns refer to the button number on the analyzer that must be depressed in order to obtain the reading indicated at the top of the column;

(3) Grid No. 1 refers to the input or control-grid;

(4) Grid No. 2 refers to the screen-grid;

(5) Grid No. 3 refers to the suppressor-grid.

List of Parts

One Alden, 6-prong plug with three-foot, seven-wire cable, type 906 WLC; (1);

One Alden, adapter, type 964 DS, (2);

One Alden, adapter, type 965 DS, (3);

One Alden, 6-prong panel-mounting socket, (4);

One Alden, 5-prong panel-mounting socket, (5);

One Alden, 4-prong panel-mounting socket. (6);

One Alden. insulated screen-grid clip, (7);

One Best, 3-circuit, 6-position switch, (8);

Two International. No. 4 plugs, (9), (10);

Two International, tip jacks, red, (11), (12);

Two International tip jacks, green, (13), (14);

Two International, tip jacks, black, (15), (16);

One Yaxley, potentiometer, type 5C1MP, (17);

Six Yaxley, push-button switches (non-locking), type 2006, (18), (19), (20), (21), (22), (23);

Six Yaxley push-button switches non locking). type 2004, (24), (25), (26), (27), (28), (29);

One Yaxley Junior. T.P.D.T. switch, (30);

Two H & H, S.P.D.T. switches. (31), (32);

One Taussig, rectifier, (33);

One Weston, type 301, 0-1 ma. meter (50 millivolt full-scale deflection), (34);

Six Van, multipliers for the D.C. scale, 5.000, 10,000. 50.000, 250,000, 500,000 ohms, and 1. megohm resistors, (35), (36), (37), (38), (39, (40);

Six Van, multipliers for A.C. scale, 3.900, 8,100, 88,000, 220,000, 450.000, and 900.000 ohms. (41), (42), (43), (44), (45), (46);

Four Van. shunts for D.C. milliampere ranges, 12.5, 2.083. .505-, .0102-ohms, (47), (48), (49), (50);

One Van, multiplier for resistance continuity test. 4,000 ohms. (51);

One Van, meter dial, Type 4. (52);

One 4.5-volt "C" battery, (53);

One Blan, instrument case, 9 x 12 x 4 ins., cover depth 1¾ ins. inside dimensions), (54);

One Bakelite panel, black, 7 x 12 x 3/16 ins. (55).

RADIO-CRAFT ANALYSIS CHART

Tube Type	Fil. Volts	Plate Volts	Plate Current	Grid No. 1 Volts	Grid No. 2 Volts	Grid No. 3 Volts	Grid No. 1 Cur.	Grid No. 2 Cur.	Grid No. 3 Cur.	Cathode Cur.	Cathode to Heater Volts	Full-Wave No. 2 Plate Volts	Full-Wave No. 2 Plate Cur.
WD-11	11	8	3	7	..	..	2	..	..	..	..	..	..
WX-12	11	8	3	7	..	..	2	..	..	..	..	..	..
41	11	8	3	7	..	..	2	..	..	..	..	..	..
44	11	8	3	6	7	..	1	2	..	5	10	..	..
49	11	8	3	7	10	..	2	5	..	5	..	..	..
55	11	8	3	6	..	..	1	..	..	..	10	..	..
56	11	8	3	7	..	..	2	..	..	5	10	..	..
57	11	8	3	6	7	9	1	2	4	5	10	..	..
58	11	8	3	6	7	9	1	2	4	5	10	..	..
'12A	11	8	3	7	..	..	2	..	..	..	..	..	..
'99	11	8	3	7	..	..	2	..	..	..	..	..	..
'00A	11	8	3	7	..	..	2	..	..	..	..	..	..
'01A	11	8	3	7	..	..	2	..	..	..	..	..	..
'22	11	8	3	6	7	..	1	2	..	..	..	..	..
'24	11	8	3	6	7	..	1	2	..	5	10	..	..
'26	11	8	3	7	..	..	2	..	..	..	..	..	..
'27	11	8	3	7	..	..	2	..	..	5	10	..	..
'30	11	8	3	7	..	..	2	..	..	..	..	..	..
'32	11	8	3	6	7	..	1	2	..	..	..	..	..
'34	11	8	3	6	7	..	1	2	..	..	..	..	..
'35	11	8	3	6	7	..	1	2	..	5	10	..	..
'36	11	8	3	6	7	..	1	2	..	5	10	..	..
'37	11	8	3	7	..	..	2	..	..	..	..	..	..
'39	11	8	3	6	7	9	1	2	4	5	10	..	..
'40	11	8	3	7	..	..	2	..	..	..	..	..	..
'64	11	8	3	7	..	..	2	..	..	..	..	..	..
Wunderlich	11	7	2	..	..	..	..	..	..	1	..	..	..
85	11	8	3	6	..	..	1	..	..	5	10	..	..
41	11	8	3	4	7	..	9	2	..	5	10	..	..
42	11	8	3	4	7	..	9	2	..	5	10	..	..
46	11	8	3	7	10	..	2	5	..	..	..	..	..
'20	11	8	3	7	..	..	2	..	..	..	..	..	..
'71A	11	8	3	7	..	..	2	..	..	..	..	..	..
'10	11	8	3	7	..	..	2	..	..	..	..	..	..
'31	11	8	3	7	..	..	2	..	..	..	..	..	..
'33	11	8	3	7	10	..	2	5	..	..	..	..	..
'38	11	8	3	6	7	..	1	2	..	5	10	..	..
'45	11	8	3	7	..	..	2	..	..	..	..	..	..
'47	11	8	3	7	10	..	2	5	..	..	..	..	..
'50	11	8	3	7	..	..	2	..	..	..	..	..	..
LA	11	8	3	7	..	..	2	..	..	..	..	7	2
'82	11	8	3	..	..	..	..	..	..	..	..	..	..
BA	..	..	3	..	..	..	..	..	..	..	..	..	..
BH	..	..	3	..	..	..	..	..	..	..	..	7	2
'80	11	8	3	..	..	..	..	..	..	..	..	7	2
'81	11	8	3	..	..	..	..	..	..	..	..	..	..
'66	11	6	1	..	..	..	..	..	..	..	..	..	..

D.C. FROM YOUR AUTO

A RECENT news item stated that a young man interested in radio had married a young woman also interested in radio. They made a special five-tube set, for use during their honeymoon, to be operated by the storage "A" battery in the automobile they owned.

Anyone can operate their receiver this way by following the idea illustrated in Fig. 1. Any burnt-out "bayonet-base" lamp may be used. The glass part is broken out and two leads are soldered to the contact points. There are two types of base; single-contact and double-contact; use one which properly fits the particular outlet you want to take the six-volt supply from. *Caution:* Examine one of the auto lamps and make certain that the D.C. supply is not 12 volts.

A wooden handle is fastened to the lamp shell; this makes it easy to remove the current tap and replace the lamp. It is usually most convenient to tap the current at the instrument board.

The amount of current consumed by the average five-tube set in an hour is about one and one-half amperes; the automobile lamps probably consume three to ten amperes. So, the comparison indicates, there is no objection on the score of undue battery drain. In fact, the starting motor will probably draw as high as 300 amperes (instantaneous value) for the few seconds it is on during starting.

If a two-color cord is used for connecting, it will be easy to distinguish "A" positive from "A" negative, by using a red lead for the former and a black wire for the latter.

Of course, it is necessary to have the right connection when the plug is made up; but, as the sockets will probably all be connected the same way, the "A" polarities to the set will not be reversed if another socket should be tapped at another time. Usually, the shell of the single-contact base will be negative and the contact positive; a simple test for the double-contact base is to connect the plug "A" leads to the set. If it works, the connections are correct; if it doesn't, the "A" connections are reversed.

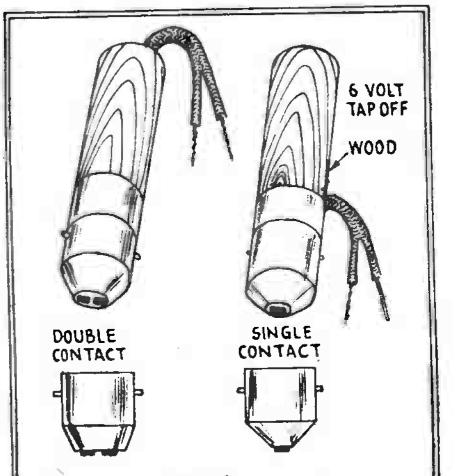

Fig. 1

A simple tap to the automobile storage battery will operate a receiver efficiently.

Modernizing the "133A" Set Analyzer

An Ingenious Enlargement of a Standard Instrument, for Modern Requirements.

NO doubt there are many Service Men who have a Jewell "Model 133A" set analyzer, and would like to modernize it with a minimum of expense. I believe they will be interested in the arrangement which I made of mine, and with which it is possible to make practically all tests that are necessary in the field.

The original analyzer (shown within the dot-and-dash lines) had a UX socket and a four-wire cable. It was necessary to add a UY socket; a five-wire cable and a five-prong plug, made from an old tube base, were needed also. The new apparatus was mounted to the former apparatus with two angle brackets, one on each side, which are also fastened to the carrying case and help to support the panels. The arrangement was dictated, of course, by the parts on hand. With that shown, the enlarged analyzer is kept symmetrical.

The detail of the switching mechanism shows the method of mounting used; Yaxley jack switches were removed from their frames and mounted on a piece of bakelite, which is fastened to the main panel by four screws. The holes for the push buttons were then drilled and reamed. The buttons are made of ⅜-inch bakelite rod, matching those on the original analyzer; on each button there is engraved a line, which is filled with white. The position of the line is kept vertical by a pin through the button, which plays in a groove in the bakelite strip mounting the switches. By pressing the button down, and giving it a slight twist, the switch is locked in the closed position. In the circuit diagram, the brackets indicate which contacts each button controls.

The phone-tip jack and the screen-grid push-button switch are used in conjunction with the adapters to test screen-grid tubes. The adapters are made from old tube bases, and sockets, wired as shown.

To test screen-grid tubes, one adapter plug is placed in the socket of the set, and the analyzer plug is inserted into the adapter socket. The control-grid lead is then snapped on the lead from the adapter, the other plug of which is inserted into the socket in the analyzer; and the tube is placed in the adapter. The phone tip is plugged into the tester panel, and the lead from the adapter is snapped over the control grid cap of the tube.

To take the readings, the screen-grid push button and 100-volt push buttons are pressed simultaneously. The other readings are taken in the same manner as with three-element tubes. To change over to the next socket, it is necessary only to remove the control-grid lead and move the adapter and plug as one unit to the next socket.

For use in conjunction with the cathode-voltage switch, a reversing switch has been incorporated; with this in normal position, the cathode voltage will be negative. When it is reversed, a positive reading is obtained. A 50,000-ohm resistor is used for cathode voltage readings on the 50-volt scale.

The following parts were used:

One black bakelite panel, 8 x 7 9/16 x ¼-inch;

One piece black bakelite, grooved as shown, 4½ x 4½ x ¼-inch;

Seven pieces ⅜-inch bakelite rod, cut and drilled for buttons;

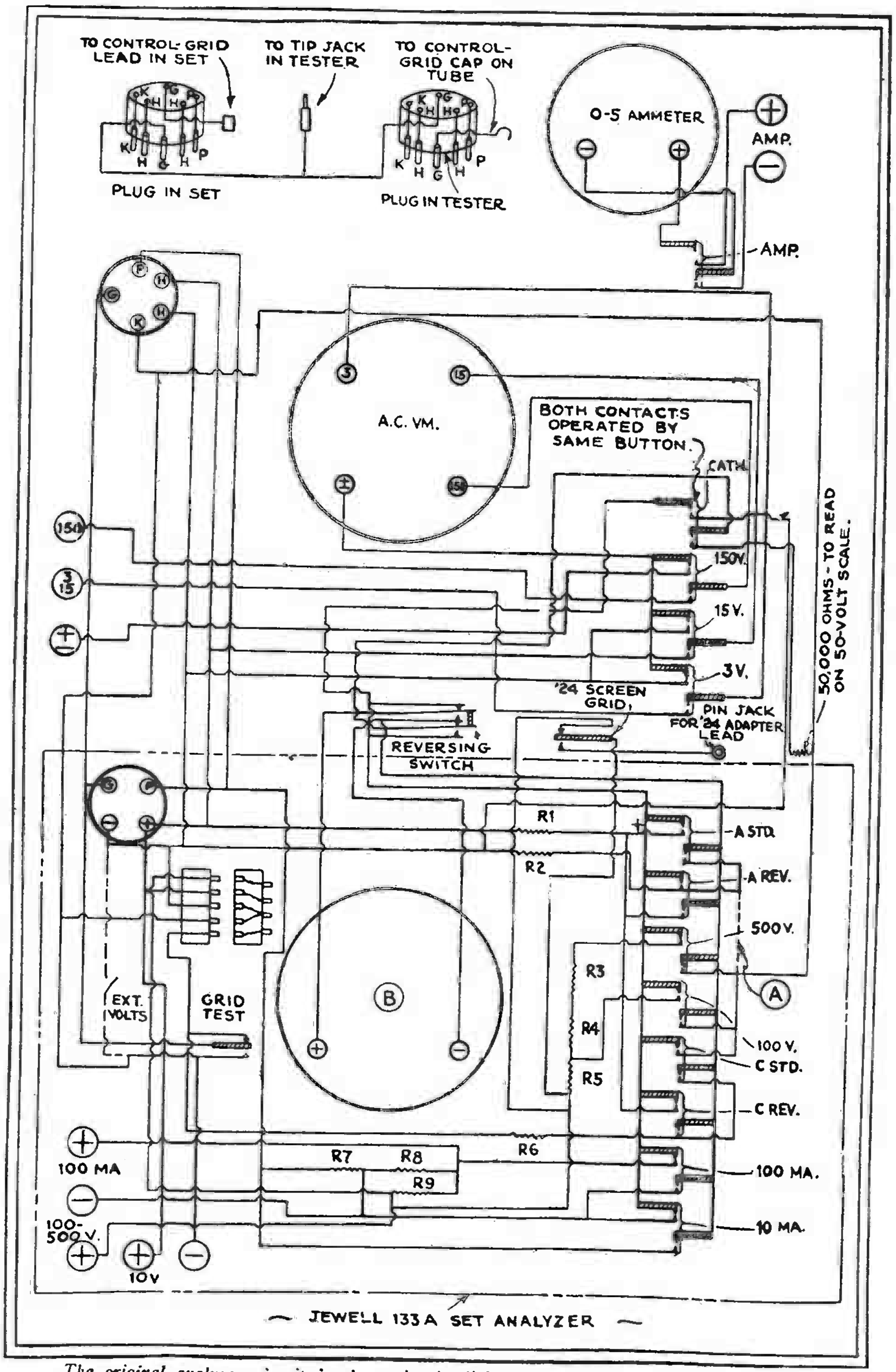

The original analyzer circuit is shown in the light, broken-line panel below; The additions above; and the detail of the adapter plugs at the upper left.

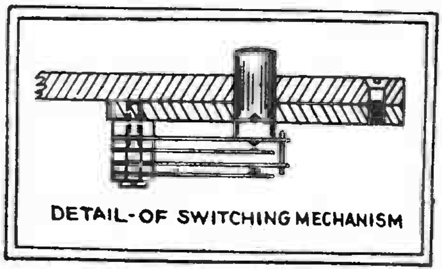

Fig. 1

The push-button switch locks when twisted

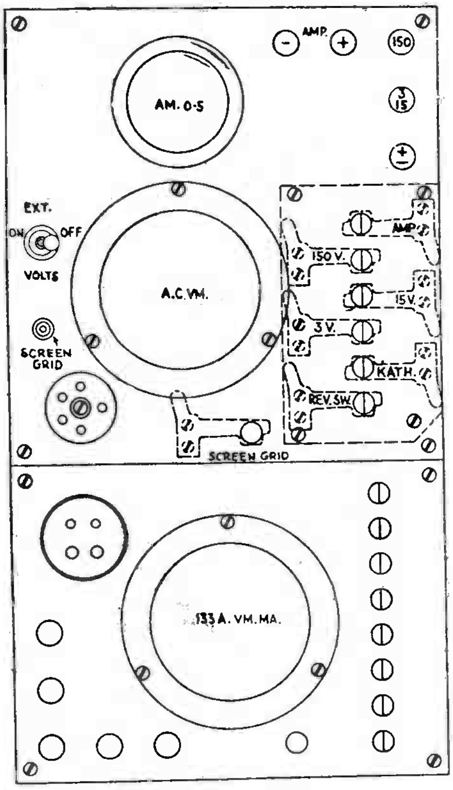

Fig. 2
Panel arrangement of the enlarged analyzer, the circuit of which is shown on page 237.

One *Jewell* "Pattern 74" A.C. meter; 0-3-15-150 volts;
One *Weston* "Model 506" 0-5 scale ammeter;
One *Frost* "No. AC 609" snap switch;
One *Na-Ald* "No. 423" CY socket;
One *Yaxley* "No. 416" pup jack;
Five *Eby* binding posts;
Five *Yaxley* "No. 740" Jr. jack switches for "Amp.," "3 V," "15 V," "150 V," A.C. and "Cathode" volts;
One *Yaxley* "No. 745" Jr. jack switch, for reversing meter;
One *Yaxley* "No. 730" Jr. jack switch for screen-grids;
One *Durham* 50,000-ohm "Precision" wire-wound resistor, and *DeJur* mounting.

There is plenty of room in the case for the necessary adapters and test leads. The hinges were taken apart; and part of one half of each was sawed off and fitted in such a manner that the cover can be removed by merely slipping the hinges from the pins. The case I employ was used because it was on hand, and the constructor has the option of other arrangements. I believe that the oscillator and output meter are more conveniently used when made up as separate units; so I did not incorporate them in this apparatus.

None of the resistors used in the original analyzer were changed. Their values, as shown, are: R1, 5,000 ohms; R2, 5,000; R3, 200,000; R4, 200,000; R5; 100,000; R6, 45,000; R7, 27.78; R8, 2.52; R9, 200 (approximately).

Building a Resistance Calculator

FEW experimenters are fortunate enough to have an ohmmeter or other instrument for the measurement of resistance. There is no end to the occasions that call for the use of some such device, even while carrying on the simplest of experiments.

With the current and the voltage known, the resistance can be calculated by applying the formula for resistance in Ohm's Law. A voltmeter and a milliammeter, when used in connection with a battery, will give these values. The disadvantage of this method is in having a voltage supply that is constant while the current that must flow through the resistance being measured, is drawn from it. Then too, a considerable variation in the voltage must be available to accommodate the measurement of greatly different resistance values with any degree of accuracy. For a low resistance measurement, it is not possible to use a high voltage; on the other hand, when dealing with higher values the voltage should be increased.

Where the work can be done quickly, batteries are satisfactory, but oftentimes the voltage required for accuracy may be as high as 100 volts. In these days of battery eliminators, it is somewhat of a problem to secure this battery voltage.

A Reliable Voltage Source

Various schemes were tried out while searching for something that would supply any reasonable voltage for as long a time as was necessary to complete the work at hand. It was decided that 100 volts would be sufficient for all requirements. The A.C. lighting circuit seemed to offer an unfailing source of energy. Now to convert this into the direct current required. After discarding several ideas as altogether too complicated, the scheme illustrated in Fig. 1 was adopted.

The only things needed are a tube for rectifying and a variable resistance to regulate the voltage output supply. Several tubes were tried and a '26 was selected since the rectified voltage was plenty high enough and the current output sufficient. Then also, most experimenters will have several of these tubes not in use since they have been replaced by other types.

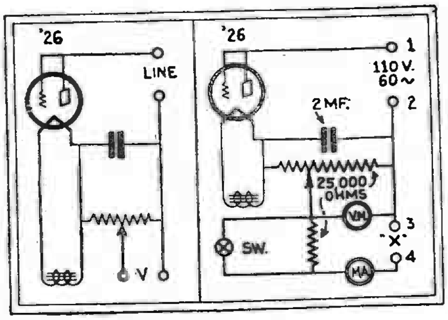

Fig. 1, left
Theoretical circuit of the resistance calculator.

Fig. 2, right
Final circuit diagram of the calculator.

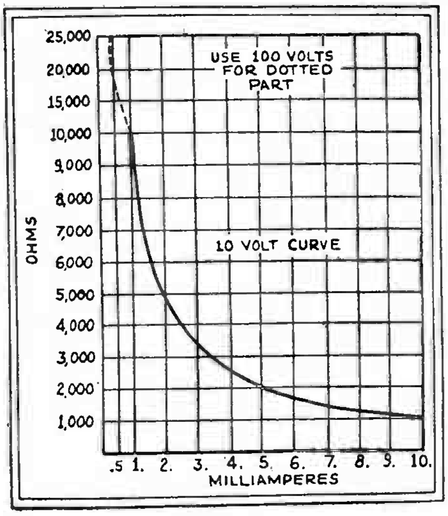

Fig. 3
The 10-volt calibration curve. The dotted portion is for an applied voltage of 100.

The 110-volt line has one side tied to the grid and plate terminals of the tube while the other side of the line is not connected to the rectifying tube directly. A variable resistance of 25,000 ohms is in series with the tube filament and the other side of the line. The 2-mf. condenser shown across this resistance levels out the rectified voltage just as in any rectifying circuit. It can be of the low-voltage bypass type since the voltage is not great.

The filament of a '26 operates on 1.5 volts and consumes 1.05 amps. An idle filament transformer having such a winding can be used for this; or, if one is not handy and the device is to be made more or less permanent, a heater transformer can be quickly made. For the core, remove the laminations from a burned-out audio transformer. That portion of the core inside the coil is in most cases about ½-in. square.

If the dismantled transformer had a bobbin in which its coil was wound, remove the wire and use the bobbin for the new coil. Otherwise, a form can be easily made of cardboard. The total current is low, therefore a primary wound with No. 32 B&S wire will carry it. Using this wire with enamel insulation, or better still, enamel and silk, wind 1800 turns on the coil and insulate it with tape. As the wire is quite thin, flexible leads had best be soldered to the start and finish of this primary. The 1.5-volt winding consists of 24 turns of No. 20 B&S enameled wire. Cover the coil with tape to protect the wire. The laminations should now be put back in place in the new coil. To eliminate any tendency to hum, dip the transformer into a pot of melted wax; this when cool will hold everything firmly.

The Variable Voltage Feature

In Fig. 2, the parts are shown connected diagrammatically. It is the connection from the movable arm on the 25,000-ohm resistor that gives the voltage and current used for our purpose. With the arm at the end nearest the filament connection, the voltage obtained will be 100 volts when the maximum of 10 ma. is being used. The drain through the resistance will be about 4 ma., making the total less than 15 ma. at maximum.

The meter connections are shown in this

figure also. The voltmeter should have a 0-100-volt scale and preferably marked in 10-volt divisions. The 2500-ohm resistance in series with the milliammeter is only used when measuring low resistance, and can be cut in or out of the circuit at will, with the single pole switch shown.

The Resistance Curve

To eliminate the necessity of working out each resistance problem, the curve given in Fig. 3 is used. Along the lower edge appear the current values in milliamperes. The resistance in ohms is at the left, vertically. This curve gives the resistance value directly when the voltage used in measuring is 10.

To make a measurement, proceed as follows; referring again to Fig. 2, the unknown resistance is connected to the terminals at 3 and 4. There is no need for haste in taking the readings as the current used will have no effect whatever upon the voltage. Assuming that the resistance is not known, have the switch at the left open thus cutting the 2500-ohm resistance into the circuit. Move the arm P to the right as far as possible, thus decreasing the voltage to a minimum. Plug into the 110-volt lighting circuit. Next move the voltage adjustment to the left until the voltmeter indicates 10 volts. If the reading on the milliammeter is low, close the switch and forget about the 2500 ohms. The most accurate conclusions are arrived at when using that part of the curve between 2 and 5 ma. Therefore, should the meter show less than 2 ma., move the voltage up until it comes within these limits.

Assume that it requires a potential of, say, 40 volts to produce the desired current flow, and again for purpose of explanation, assume that this current is 3 ma. Following the vertical 3-ma. line to the point where it intersects the curve, and looking left along the horizontal line also intersected at this point, it is found that the resistance value lies between 3000 and 4000 ohms. And as each horizontal line represents 100 ohms, the exact value is 3,330. This would be true if the voltage used was 10; however, as 40 volts were used simply multiply the result by 4, giving 13,320 ohms as the resistance.

In this manner, one curve is used for any multiple of 10 volts by simply multiplying the result by the multiple used. Using 50 volts, multiply by 5; or using 90 volts, multiply by 9. Any value can be measured with 10 volts between 1000 and 10,000 ohms and taken directly from the curve.

Construction of a Resistance Meter

ALMOST every radio and electrical experimenter has need of an efficient and reliable resistance meter. With this he can design his own resistors, choke coils, and many other things. The instrument mentioned in this article was constructed from a potentiometer, a galvanometer, two binding posts, one dial, and a small box. (Fig. 2.)

Assemble and wire in accordance with the diagrams; Fig. 1 is the schematic circuit. The potentiometer R should be one of about 1000 ohms. The galvanometer G may be replaced by a high-range milliammeter and the results will be the same. The battery B is just a two-cell flashlight battery, which can be purchased from the ten-cent store.

After everything is assembled comes the calibration of the potentiometer R. This can be done with a Wheatstone bridge. (If the constructor does not have a Wheatstone bridge, one may be had for the asking at your local high school. In the event that the constructor is not familiar with the Wheatstone bridge, the physics instructor at the high school would be glad to explain it.) If you can use the bridge, proceed as follows: attach to the potentiometer a dial, (vernier preferred) and adjust the potentiometer for a reading of 5 on the dial. With this fractional part of the potentiometer in the circuit, connect it to the Wheatstone bridge and find what the resistance of that part is. Get a piece of "graph" squared paper and graph the resistance in ohms, for every five marks or degrees on the dial, *across the paper;* and graph the reading or degrees on the dial *up and down.* Where the two intersect on the graph page, place a dot. After the resistances have been calibrated from zero to the full value of the dial for every five degrees, draw a line through all of the dots. This will be your calibrated curve for the resistance meter.

To operate the meter, place an unknown resistance Rx across at the binding posts, and note the reading of the galvanometer G when the unknown resistance is placed in the circuit. Switch on to the calibrated potentiometer R and adjust until the galvanometer reads the same as before. The value is then the same in both resistances. Take the reading of the dial in degrees and look that reading up on the graph, and the value of the unknown resistance can be read direct from there.

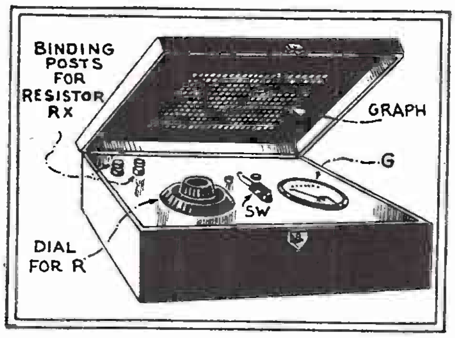

Fig. 2

By ganging several variable resistors of assorted ranges at R, and tapping them to a selector switch, the resistance range may thus be greatly increased.

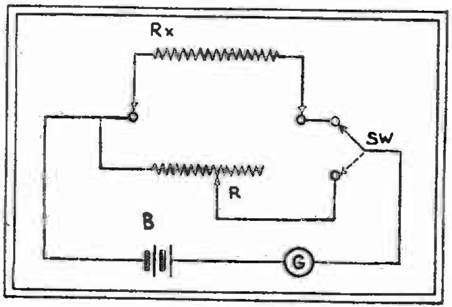

Fig. 1

A good wire-wound potentiometer, a galvanometer, some calibrated resistance standards, and a few odds and ends, complete this handy instrument.

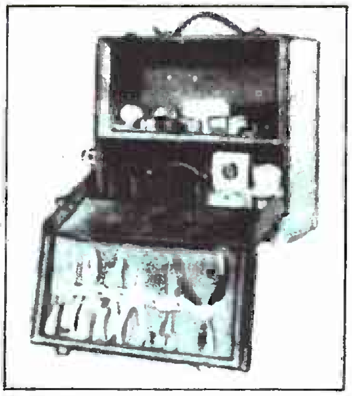

From a photograph of the service kit, as it appears when the case is opened. There is a place for every tool and accessory, as well as the analyzer.

AN EASILY-MADE SERVICE KIT

RECENTLY, this writer acquired a Crosley "4-29" portable set as a trade in; since both audio transformers were "shot," it was of little value.

However, with very little work I made a service kit which is ideal for my purpose, and I believe that it pretty nearly hits the nail on the head for the average Service Man.

With the equipment which I carry and which serves every ordinary need, the weight is not excessive.

Below is a list of tools which the little box holds: 1 ratchet screwdriver; 2 ordinary screwdrivers; 2 small screwdrivers; 1 electric iron, flux and solder; 1 pair diagonal pliers; 1 pair long-nose pliers; 1 pair flat-nose pliers; 1 pair scissors; 1 small monkey-wrench; 1 balancing wrench; 1 Readrite set analyzer; 50 ft. hookup wire; and small odds and ends.

The front, as will be noted opens downward and splits. On the upper section, pliers and screwdrivers are arranged in tape slots. The upper platform is devoted to odds and ends; while in the lower part I keep my set analyzer.

There is enough room in the top for a vertical and removable partition. Various tools could be secured to this partition; and five assorted tubes might be carried behind it.

The dimensions of the case are illustrated, for those desirous of building one for their use, in the absence of a discarded portable.

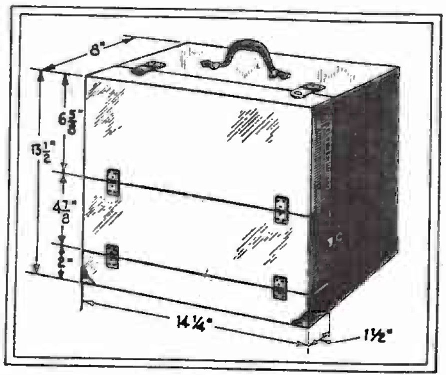

The case of an old portable receiver, which accommodates itself handily to use as a service kit. It is of a convenient size to carry.

Favorite Testing Equipment of Service Men

The "pet" testing equipment of Service Men is described in detail by the Service Men themselves.

A ONE-METER SERVICE UNIT

ALTHOUGH any number of articles on resonance indicators have been published in various radio magazines, the writer has seen none that are as handy or that cover such a range of usefulness as the one to be described.

As seen from the diagram below, the unit is a combination resonance indicator and vacuum tube voltmeter. It may be used to measure receiver output, or to balance and neutralize R.F. stages. One meter is thus used for two purposes, which is an item of importance in the small shop.

The capacity C should be very small (about 100 mmf.) and should be so adjusted that as resonance is approached the pointer of the meter drops *gradually* and returns to normal just as gradually when the resonant point is passed. If in passing the resonant point, the pointer "breaks" and quickly rises to normal, it is an indication that C is too large.

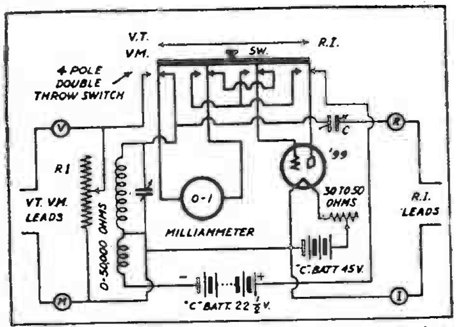

Diagram of the single unit tester. When the switch is thrown to the left, it is a vacuum tube voltmeter; when thrown to the right, it is on oscillator and resonance indicator.

The coil-condenser tuning arrangement may be any that covers the band required, and may be salvaged from an old set if so desired. It is advisable to use either a vernier condenser or a vernier dial. A larger tube V may be employed (thus allowing the use of a less sensitive meter, or even a cheap "B" battery voltmeter with its resistance removed). This, however, destroys the portability of the instrument through the use of heavier filament batteries.

With the switch SW thrown to the R.I. side, we are ready to align condensers.

For such sets as Crosleys that have the tuning condensers entirely enclosed, we use an old tube base with the lead from R soldered to the first grid prong for aligning the first two stages, the lead I being always grounded to the chassis of the receiver. The end of the condenser shaft on the stage to be aligned is slotted with a hacksaw to facilitate turning the condenser when the set screws are loosened. (All aligning should be done with the small panel balancers at the neutral or center positions.) Each condenser should be set so that they are all resonant for the same position of the R.I. dial. For the detector stage it is necessary to attach R to the coil end of the grid condenser. All of the above applies to receivers that use the neutrodyne method of oscillation control.

For sets that use the grid resistor or "losser" method, such as the Atwater Kent, it is necessary to connect R to the coil end of the grid resistor, a battery clip being used for this purpose.

It is important to keep the relative position of the lead R constant with respect to the various parts of the receiver. To accomplish this, we use in our shop a rubber band attached to the ceiling in order to hold the lead up over the set, allowing it to drop straight down to the condenser under test.

With the switch on the V.T.V.M. side, the unit may be used to measure set output, to balance or neutralize receivers by the conventional methods, or for any of the number of things for which this device is suitable.

The entire arrangement, including batteries, is built in a box 12 x 4 x 6 ins.

AN INEXPENSIVE CAPACITY METER

HOW often has the Service Man wished to know the capacity of a certain filter or by-pass condenser, but, like the most of us, found that the usual capacity measuring instruments were too expensive to own? Of course, the larger sizes can be measured approximately by the use of an A.C. ammeter, but this method will not measure the smaller condensers easily.

The writer has solved this problem by using the circuit shown in Fig. 1.

The parts needed are a 0-1 milliammeter, which is a very useful instrument that most Service Man have on hand, a Westinghouse dry disc rectifier (such as used on the old Rectox trickle charger and on some dynamic speakers), a 25 watt, 110 volt lamp and socket, two toggle switches, four 'phone tip jacks, and a pair of cords.

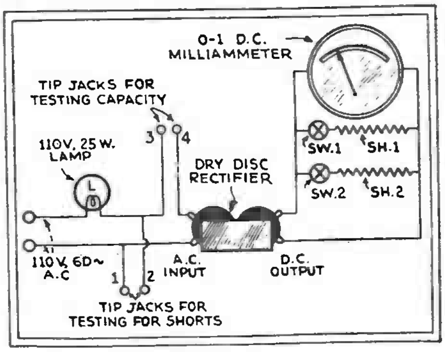

Fig. 1

Circuit connections of the capacity meter. A dry-disc rectifier in conjunction with a D.C. meter is used for measuring values between .005- and 10 mf.

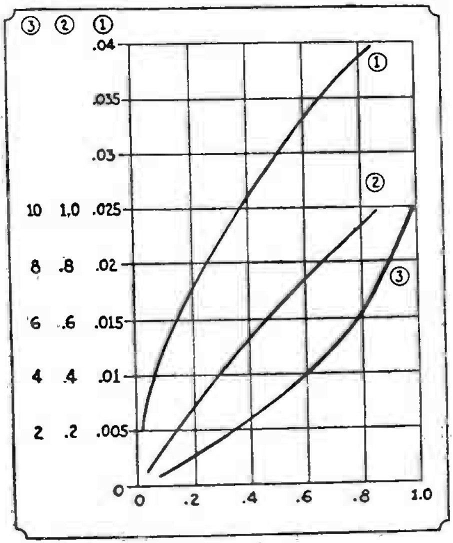

Fig. 2

The values of capacity are obtained directly from the curves above. The abscissas correspond to the meter readings, and the vertical lines to capacity. Curves 1, 2 and 3 correspond to the different values of shunts used.

The diagram is self-explanatory. The shunts are home made of 0.016-in. diameter nichrome wire. Shunt No. 1 is approximately 3 ins. long, and should be adjusted to read exactly 0.9-ma. with a good 1.0 mf. condenser in the circuit. Shunt No. 2 is 0.5-in. long, and should be adjusted to read 1.0 ma. with a 10 mf. condenser in the circuit. The terminals on these shunts should be clamped rather than soldered, because solder does not "take" well to nichrome wire.

These readings may show a slight variation with different rectifiers, but after a few checks on condensers of known capacity, the service man will be able to determine capacities at least within the accuracy with which the average commercial condensers are made.

For checking smaller capacities than about .005-mf., the writer would advise the bridge balance method, but the above scheme gets most of the troublesome ones.

By reference to the diagram, two sets of tip-jacks will be found. If a condenser is to be tested for a short, it is connected between terminals 1 and 2. If the condenser *is* shorted the lamp will light up, if not, the lamp will not light. On the other hand, when a condenser, known to be good, is to be measured, then it should be connected between terminals 3 and 4. The resulting meter reading should then be referred to the chart reproduced in Fig. 2.

ADAPTER FOR TESTING RECTIFIERS

IN altering a tester for sets and tubes, which I made some years ago for use with battery-operated receivers, I found the device described very handy and, as it is easy to duplicate, I think other Service Men will find it useful.

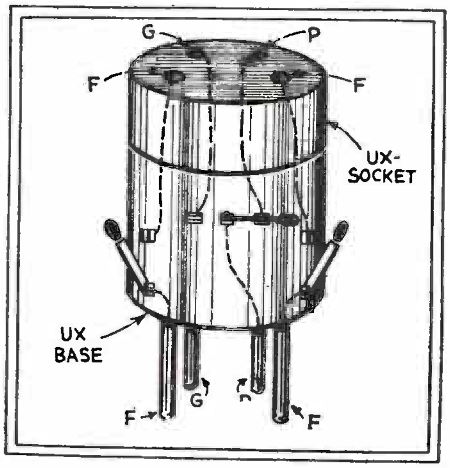

A sketch of the adapter used for testing "BH" rectifiers. The switches are for the purpose of conveniently changing the socket connections.

The ordinary tester has a milliammeter in series with the plate lead. To measure or test rectifier tubes of the filament type, it is necessary to swing the plate lead alternately to the "P" and "G" on the socket of the rectifier—that is, to one or the other plate.

In a gaseous ("BH") rectifier, the "plates" are connected to the filament prongs, and the test consists of disconnecting one anode and, after observing the meter reading on the other, rearranging the connections for the other reading.

This adapter is made of a UX tube base and a Pilot UX sub-base socket, two S.P. S.T. and one S.P.D.T. switches. Such switches can be bought for 10 cents; I had them, and to make the adapter as compact as possible, I removed the blades and points from their bases and used the shell of the UX base to mount them as shown. Since the rectifier plates carry fairly high voltages, to avoid a possible shock I removed the small fiber insulation from the switch blades and borrowed three celluloid tips (disguised as bakelite tips), from Friend Wife's umbrella while she was not looking. These I placed on the switch blades as new handles.

The entire arrangement is very compact and may easily be carried in any service kit. While the use of gaseous rectifiers is becoming less and less as time goes on, the Service Man can never tell when he is going to "strike" one in the field.

CALIBRATING VOLTMETERS

HIGH-RANGE D.C. voltmeters, suitable for testing power-supply units, are expensive. The Service Man usually has available, or can buy at small cost, a good low-range meter, for the reason that such are in more common use; his problem is to calibrate the voltmeter for high voltages with a reasonable degree of accuracy.

Perhaps the simplest method is to connect some high-resistance units in series and, with the aid of the low-range meter, measure the drop across a known fraction of the total resistance. Thus, for example, suppose that five small 110-volt, 10-watt lamps are connected in series across a D.C. supply of 500 volts (such as the supply to a transmitter) furnished by a rectifier, or a small generator. The voltage across each lamp can be measured; and the sum of these voltages will be the total available.

For this work a high degree of accuracy is usually not necessary. The voltages across the lamps, or resistors, are measured; the sum of the readings being the total voltage of the source. A resistor (in this case having approximately four times the resistance of the voltmeter itself) is then connected in series with the instrument; and the meter is connected directly across the high voltage. The scale is then marked with the measured value previously determined. If the D.C. voltage is variable, a low value should be used at first; and various readings can thus be obtained. A "B" unit which is known to be in good operating condition can be used for calibration purposes; but the load taken by small lamps will be too great. Resistors of suitable value should be used in this case.

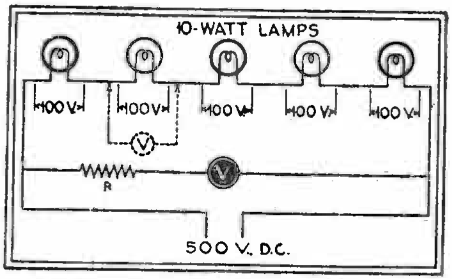

The voltage drop across each lamp should be 100 volts, if five 10-watt-lamps are connected across a 500 volt source.

AN IMPROVEMENT IN OHMMETERS

THE average Service Man is familiar with the need for an ohmmeter of some sort as the most convenient means of checking up on the various resistors with which the modern radio set and power-pack is blessed.

For general use these instruments seem to fall into three different classes; the continuity test type, Fig. 1, the slide-wire bridge type, Fig. 2, and the two meter type, in which the unknown resistance R is determined by the application of Ohm's Law, R=E/I, Figs. 3 and 4.

The first is quite convenient as far as portability is concerned; it gives direct readings of resistance over its entire range, and it is most useful as a continuity tester aside from its value as an ohmmeter. It falls down chiefly in that its useful range is quite limited, since the scale is crowded for the higher values of resistors.

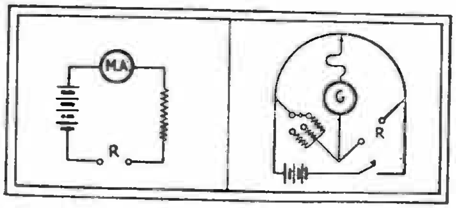

Figure 1, left. The usual circuit diagram of a continuity tester.

Figure 2, right. The slide wire bridge method of measuring resistance.

The second type in which a rotary slide-wire, standard resistances, galvanometer, etc., provide a true bridge method of measuring resistors, is not so common, although at least one instrument maker has marketed such a device for radio service. Unless an expensive galvanometer is used, the sensitivity of the instrument is poor, and the accuracy suffers accordingly; and, as in all slide-wire bridges, the per cent error increases rapidly as the balance point moves from the center of the slide wire.

The third type using a continuously variable E.M.F., a voltmeter for reading E, and an ammeter (usually the 1.0 ma. range) for reading the current through R, is direct reading (if the current is made some decimal factor of unity, then the volts read on the voltmeter divided by the decimal multiple of unity gives the value of R in ohms), the scale being necessarily evenly divided, and, while the accuracy is better for some values than others, with good meters it is possible to obtain excellent results in a short time.

There have been various articles on the construction of ohmmeters; the first two types are not particularly easy to calibrate without the use of standard resistances, but the third requires no extra equipment aside from a voltmeter reading up to ten volts and even this is not absolutely essential. The following is a suggestion for the construction of an instrument of this type adapted to read lower values than usual.

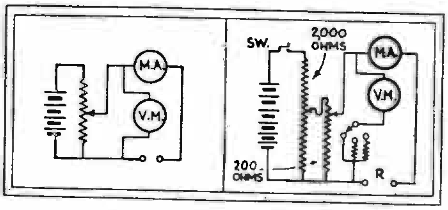

Figure 3, left. The voltmeter - ammeter method of measuring resistance.

Figure 4, right. The final circuit of the improved ohmmeter.

Most constructors advocate the shunting of the 0-1 milliammeter to 10 ma. in order to read the lower values of R, but it is simpler and better to use lower values of E; for instance if E is in millivolts and I in milliamperes then R will be given directly in ohms, where R is the *sum of the unknown resistance and the resistance of the milliammeter.* Fortunately, millivoltmeters are one of our most common types of instruments though everyone may not recognize it; for example, all Weston 301 milliammeters above 30 ma. are calibrated to 100 millivolts, and provided with a shunt such that the drop is 100 mv. when the full scale current is flowing. For our purpose a 0-100 milliammeter with the shunt removed gives us a 0-100 millivoltmeter, scale and all; if this is provided with multipliers for 1 and 10 volt ranges it will be just what we need. Thus in Fig. 4 we have an instrument reading from 0 to 100,000 ohms which can be made quite compact. The list of parts for this tester is as follows: the battery may be four of the small penlight batteries to furnish 12 volts; a 0-2000 and a 0-200 ohm potentiometer to vary the voltage; a Weston 301, 0-100 milliammeter with the shunt removed and provided with 1 and 10 volt multipliers; a three point switch for the voltmeter ranges, a Weston 301, 0-1 milliammeter, a push button switch for the battery circuit (thus avoiding undue drain on the battery); and a panel and case as desired by the individual builder. These should be wired with fairly heavy wire, old fashioned No. 14 bus makes a neat job.

The ranges covered are as given in the following chart:

Ma. Reading	Vm. Range	Range in Ohms (Weston 301)
1.0	0-100 mv.	0-73
1.0	0-1000 mv.	50-973
1.0	0-10 volts	500-10,000
0.1	0-10 volts	10,000-100,000

To calibrate the multipliers for the 1 and 10 volt ranges it is easiest to use a 0-10 voltmeter as a standard; the approximate values will be 40 and 400 ohms.

To determine the correction to be made for the resistance of the milliammeter, short the terminals at R and read resistance, subtract this from the total to obtain the true value when measuring an unknown resistor; if a Weston 301, 0-1 milliammeter is used, the value to be subtracted will be 27 ohms. For the higher values of resistance it will not be necessary to make any correction.

A 1000-OHMS-PER-VOLT MULTI-RANGE A.C. VOLTMETER

ONE of the important problems in the communication and radio field is the measurement of small A.C. voltages from low power sources at commercial and audio frequencies. The new *rectifier type* A.C. 0-1 milliammeters, such as the Weston Model 301, or the General Electric Type DO 14X, are ideally adapted for this purpose.

It is now possible to construct a multi-range, high-resistance A.C. voltmeter that will provide accurate A.C. measurements.

The circuit diagram, Fig. 1, shows the most convenient method of connecting suitable wire-wound resistors to provide a 0-10-50-100-250-500-1000 volt multi-range A.C. voltmeter. It is extremely important that these specified resistors be used, in order to obtain an accuracy within the limits required for radio servicing.

The correct value of the resistors to be employed may be determined by the use of Ohm's Law.

$$\text{R (ohms) equals } \frac{\text{E (volts)}}{\text{I (amperes)}}$$

In this simple formula, I equals amperes necessary to obtain full scale deflection of the meter, and (in this case) E equals the full scale reading, 0-10 volts.

For example: Using a 0-1. scale milliammeter, that you desire to use as a voltmeter which will have a full scale reading of 10 volts A.C.

$$\text{R equals } \frac{\text{10 volts}}{\text{.001 ampere}} \text{ equals 10,000 ohms.}$$

In the case of the 0-1. *D.C.* milliammeter, 10,000 ohms would be used for the 10 volts step, but in the case of the *rectifier* type 0-1. A.C. milliammeter (the rectifier unit of which has an internal resistance of approximately 1,000 ohms) the proper resistance is only 9,000 ohms.

For small scale readings above 10 volts it is not necessary to make allowances for the 1,000 ohms internal resistance of this meter caused by the rectifier. However, if a value lower than 10 volts is to be read, very careful consideration must be given to the actual internal resistance of this instrument, otherwise, an appreciable error might creep in. Usually, 10 volts is low enough for most A.C. measurements.

MUTUAL CONDUCTANCE METER

A TUBE may appear perfectly good as far as the normal conditions of test are concerned and yet fail to come up to the standard of its type. The three factors which really determine the effectiveness of a tube as an amplifier are: the amplification factor (mu); the plate impedance (Rp); and the mutual conductance (Gm). The first two factors are difficult of measurement with ordinary equipment; then, too, either alone fails to give a factor of merit which indicates the desirability of the tube under test as compared with others of its type. The conventional method of measuring the mutual conductance (by checking the change in plate current attending a given change in grid voltage) is clumsy and inaccurate; and it is not a definite indication of the tube under operating conditions.

Not long ago the writer was gainfully employed at a particular labor which demanded the use of tubes of known characteristics. Not only were the operating voltages of each tube checked by means of an analyzer as a matter of daily routine; but each week every tube was carefully checked on a General Radio mutual-conductance direct-reading meter.

After several weeks of regularly trotting my tubes to the whereabouts of a meter, I decided to make the proverbial mountain come to Mahomet.

For various reasons, a simplified meter of the type shown in Fig. 2 cannot be used for extremely accurate tests. The errors present are, however, the same for each type of tube to be tested and, in consequence, they have little or no effect upon the comparative test desired.

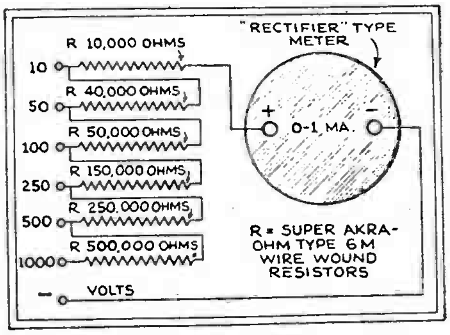

Fig. 1

A "series"-type connection of multipliers.

As will be seen from the diagram (Fig. 2 at A), the filament supply has two positive leads for use with tubes of low or high current: the low-current rheostat is a 50-ohm unit, for use with tubes having a current rating of up to 0.5-ampere; and the other rheostat, for use with tubes drawing up to 1.75 amperes, has a resistance of 4.5 ohms. A changeover switch, required where the meter is employed with screen-grid tubes, is shown schematically in the sketch.

It should be remembered that the mutual conductance reading indicates, not *what* is wrong with a tube, but the fact that *something* is wrong; whether it be gas, incorrect spacing of elements, low emission or "what have you." Except to admit that a simple bridge structure is the theoretical basis of operation of the device, no discussion of the "why" of its operation seems in order.

The mutual conductance of the tube under test is read directly from the scale of the variable resistor R1; this is a 250 ohm rheostat and it may be calibrated with fair accuracy—certainly within the limits set by other factors—by the simple process of dividing the arc which the indicator traverses into twenty-five equal portions. The constants of the bridge are such that each division on the scale (each ten ohms of resistance) will correspond to a mutual conductance of 100, and the scale should be thus calibrated from zero to 2500 (as shown at B).

The voltmeter has a range of from zero to 10 volts and may be any fairly accurate D.C. meter.

The method of operation is as follows:

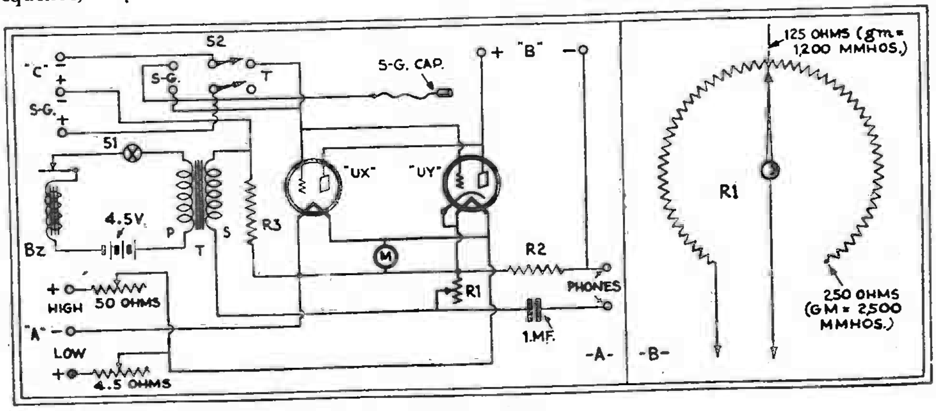

Fig. 2

(A) A "null" method of measuring "Gm." (B) Resistor R1 is adjusted for minimum response.

with the buzzer in operation and the tube in the socket, adjust the filament voltage to the correct amount by means of the rheostat. Now vary the calibrated rheostat until the minimum sound is heard, and read off the mutual conductance.

The tubes most likely to be tested are listed below together with their operating characteristics.

TABLE I

Tube Type	Volts Fil.	Volts Plate	Volts Grid	Volts S.G.	Mmhos Gm
'11 and '12	1.1	90	4.5		425
12-A	5	135	9		4600
71-A	5	180	40.5		1500
99	3.3	90	4.5		420
01-A	5	90	4.5		740
10	7.5	425	35		1600
22	3.3	135	1.5	45	350
24	2.5	180	1.5	75	1050
26	1.5	135	9.		1100
27	2.25	90	4.5		900
45	2.5	180	34.5		1800
50	7.5	450	84		1800
47	2.5	250	16.5	250	2500
30	2	90	4.5		700
31	2	135	22.5		760
32	2	135	3	67.5	505
35	2.5	180	1.5	75	1100
36	6.3	135	1.5	75	1100
37	6.3	135	9		900
38	6.3	135	13.5	135	900

The values of the parts shown are:

Bz—One high-frequency buzzer;

T—Transformer, about 1/1 ratio, such as used from single '71A output tube into a magnetic speaker;

M—0-10 voltmeter;

R1—250-ohm rheostat;

R2—100-ohm resistor, to carry relatively high current;

R3—1000 ohms;

No great care is necessary in the construction of the bridge; since, even with screen-grid tubes, the effective gain through the tube under test is not large enough to cause any appreciable feedback effect. The greatest amount of care will be required in the operation of the device: be certain that the switch is not in the "Screen-Grid" position when a three-electrode tube is being tested, and that the low-current rheostat is not employed with a tube drawing a high current.

No provision is made for checking the tubes to be tested for internal short circuits; so that a short-circuited tube introduced into the bridge circuit will result in the destruction of the 100-ohm rheostat, through which the short-circuited plate current will flow.

MODERNIZING OLD TESTERS

COUNTLESS tube testers are in use which can easily be modernized to handle the latest tubes. Although the improvements herein noted were made on a Weston "Model 533," they may be applied to practically any tester. By the use of three Yaxley No. 2003 S.P.D.T. push-button switches and one 50,000-ohm resistor, all of the latest tubes including the pentode may be tested.

Fig. 1 shows the original circuit as found in most testers, while Fig. 2 indicates the changes made. When "X" is pressed, 115 volts is impressed upon the screen of the new pentode power tube; the grid test may then be made as usual. Switch "Y" is pressed to obtain the reading of the second plate of the '80 rectifier tube. By pressing "Z", approximately 75 volts is thrown on the screen of any four- or five-prong screen-grid or R.F. pentode tube; the grid test is made as usual. All switches are shown in position as used with ordinary tubes.

In order to eliminate a loose plug-in wire for the cap of the screen grid, I used the method shown in Fig. 3, which illustrates the underside of the tester panel. When a screen-grid tube is to be tested, the clip is lifted from its position between the sockets and placed on the cap of the tube; after the test, the clip wire when released will snap back into the case. The half-hour spent in constructing the disappearing grid wire will pay for itself many times, as a convenience and time saver. Knurled nuts from dry cells make excellent pulleys, when reamed free of their threads. Silk-covered loop wire is very good for the grid wire; wax this for long life.

It is a simple trick to unwind the secondary from the filament transformer, noting the number of turns per volt. Half way between the 1.5- and 2.5-volt taps, bring out a tap for the 2-volt tubes. Half-way between the 5- and 7.5-volt leads, bring out a tap for the new 6.3-volt auto tubes. Install a Yaxley 8-point complete-break switch in place of the old selector; and your tester will be up-to-date—that is, until a new batch of tubes are thrown on the market.

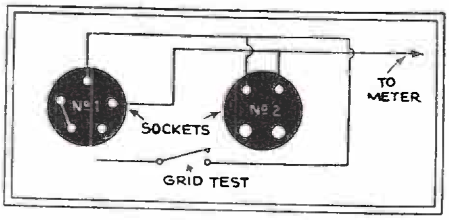

Fig. 1

Ordinary connection of UY and UX sockets in tube tester.

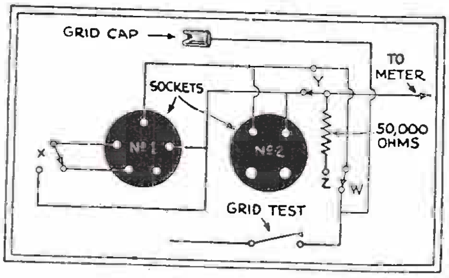

Fig. 2

Three push-button switches—X, Y and Z—and a resistor fit a tester to take pentodes

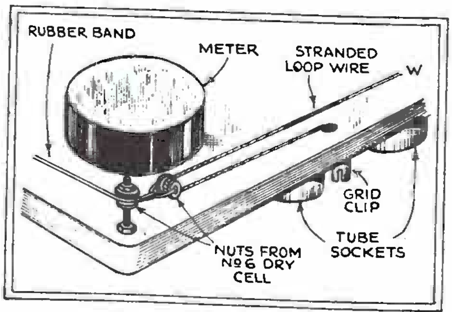

Fig. 3

Borrowing a trick from the parlor magician's bag of tricks. The cap is out of the way except when wanted

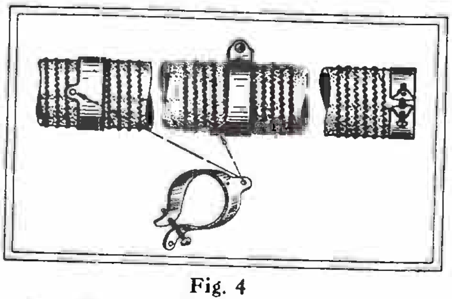

Fig. 4

The writer uses this slider to obtain very fine adjustments on a standard wire-wound resistor for calibration purposes

FINE RESISTOR ADJUSTMENTS

WHEN a fine adjustment of resistor values was required for some experimental work, I made up the vernier slider, for a "Truvolt" wire-wound resistor, which is illustrated herewith. As may be seen, it consists of a slider made slightly wider at its midpoint, with a distinct semi-globular indentation impressed or stamped therein; this indentation is made to ride the threaded channels of the resistors, allowing almost a micrometric adjustment to be made. Rough adjustments are first made in the regular up-and-down manner; then a turn to the right or left does the trick.

Those who desire an easier method of constructing the slider can simply cut two small slots in a standard slider; filing away the part which is not required, and giving the remaining small portion a slight inward bend with a pair of pliers. Be sure to file off any sharp corners which remain, to prevent cutting the resistance wire when making the adjustment.

I used this method to calibrate an 0-1 milliammeter for use as an ohmmeter; establishing a starting point and a halfway point by fastening two threads, top and bottom, running lengthwise on a 15,000-ohm resistor. Every time the slider rode over the thread, the contact was broken, and a deflection of the needle occurred. This made it possible to keep tab on the number of turns, which on a 6-inch, 15,000-ohm Electrad resistor was found to be a hundred; indicating 150 ohms per turn, or 75 per half-turn. In this manner, a fairly good job was made of the calibration

SIMPLE OUTPUT METER

A SMALL output meter, that is made up to use in conjunction with a service oscillator, is shown in the sketch.

The combination (of jacks A, B, C, D; switches S1, S2; and transformer T) makes a variable input to meter M and detector CD which forms the output indicator; depending on types of sets.

With connections to set on jacks A and B and switches in No. 2 position, primary of transformer is in series with speaker: secondary in series with meter and detector. With switches in No. 1 position, input with primary in parallel is fed direct to meter and crystal.

With input leads in jacks C and D and switches in No. 1 position, secondary is in With switches in No. 2 position, input is series with input, primary feeding to meter. in parallel with secondary and feeding to

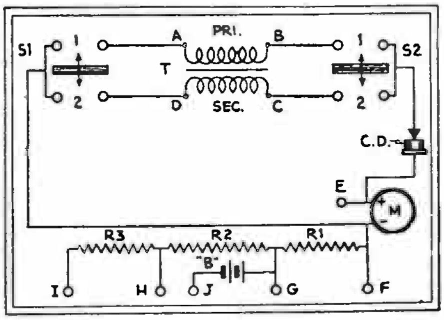

Fig. 5

This set-up is flexible for measurements on various sets; and also for continuity tests.

meter.

With input leads in A and C jacks, S1 on No. 1 position and S2 on No. 2 position, meter is connected direct to input signal.

For use as voltmeter: Jack E plus, G minus 5 volts; Jack E plus, H minus 25 volts; Jack E plus, I minus 100 volts.

Jacks E and J are for continuity testing or, if scale is calibrated, for use as ohmmeter.

A HOME-MADE TUBE TESTER

OTHER Service Men may be interested in the tube tester which I have built and had in use for some time; it may be used for all types, including the new two-volt tubes. The cost will be low, especially as most of the parts may (as a rule) be found around the shop.

It will be necessary to wind the transformer, because of the various voltages which it must furnish; mine was made from a burnt-out choke coil, taken from a power pack. The core has a cross-section ¾-inch through the winding spool, which was 1¼ inches long and 2 inches square; the required turns just fill this. The primary consists of 800 turns of No. 30 enamelled wire, each layer insulated with waxed paper (such as bread is wrapped in). The secondary comprises 54 turns of No. 18 double-cotton-covered wire, tapped at the 11th, 15th, 22nd and 36th turns.

The shunt also must be made to fit the milliammeter used; a resistance strip from an old rheostat may be cut down, in this manne Put a variable high resistance in series with the meter and a 22½-volt "B" battery; adjust it until a full-scale reading is obtained, and then shunt the resistance strip across the meter and remove resistance wire until a 5-mil. reading is obtained.

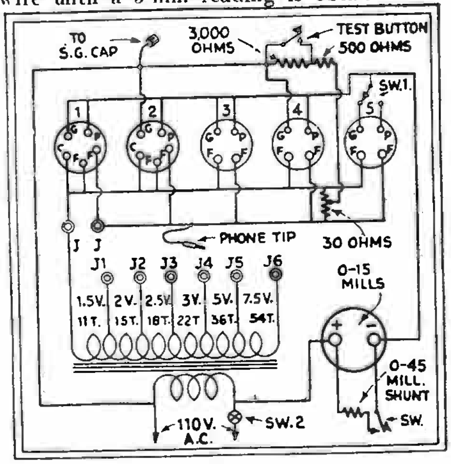

Fig. 6

CONDENSER MEASUREMENTS

AS a rule, it is difficult to tell the capacity of a condenser by looking at it; since they come in such odd sizes and shapes. It is impossible to measure them with 60-cycle current; as condensers over 0.5-mf. will pass enough current to make a meter register full scale. Most Service Men do not possess a capacity bridge for such measurements but, if a telephone magneto is at hand, condensers from 0.1-mf up can be measured very accurately by using the circuit in the accompanying diagram.

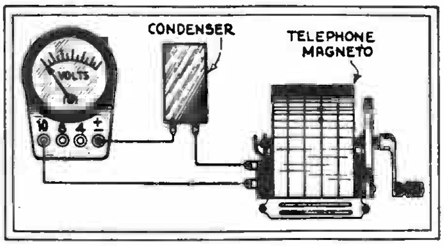

Fig. 2

In default of a capacity bridge, such as described on page 741, approximate capacity measurements may be made thus.

However, the magneto must be turned at a certain speed if the meter is to be calibrated in microfarads; otherwise capacities will have to be measured by comparison with other condensers of known values, using a double-throw switch. First test the condenser of known value, by noting the reading on the meter; then throw the switch to the unknown condenser, turning the magneto at the same speed all the time. This method is accurate enough for ordinary purposes. There is enough difference in readings of the meter to make mistakes of over a quarter of a microfarad unlikely.

HANDY SOCKET ADAPTORS

One of the handiest things in the Service Man's kit, to increase the useful range of his analyzer equipment, is a set of socket adapters. These may be made of subpanel type sockets and bases of burnt-out tubes, as shown in the sketch.

It may be necessary to file the socket to make it fit snugly into the tube-base. Bus bar should be used in making the connections from the socket to the tube base. This not only gives good conductivity, but makes the adapter sufficiently rigid so that no other supporting mediums, such as sealing wax or set-screws, are necessary.

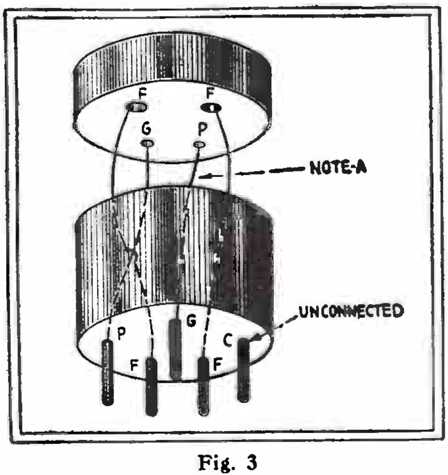

Fig. 3

A handy adapter (parts shown separated). This is for an '80 tube. Note (A) transposition of "P" and "G" leads.

A complete set of socket adapters should include a four-to-five prong, a five-to-four prong, a UV-to-UX and a UV-toUY. Even the comparatively obsolete WD11 may be encountered often enough to justify making an adapter for it.

In balancing up a neutrodyne set it has been customary to use a perfectly good tube, with one of its filament prongs cut off, as a dummy. By making a pair of neutralizing adapters, one a five prong-to-five prong, and the other a four prong-to-four prong, and omitting one of the filament or heater wires in each case, the necessity of a dummy tube is obviated. Furthermore, with these adapters, the set can be balanced with its own tubes; which is, after all, the only true method.

AN AUDIO OSCILLATOR

The essential parts comprise merely an '01A tube and socket, mounted with an A.F. transformer on a block of wood, with the connections shown; a switch in the "A" lead would be an added convenience. Three dry cells are sufficient for most purposes; the filament does not require much heating, so two cells are sufficient for this purpose. For the "B" voltage, a single flashlight cell will give a good signal through phones; though it usually requires 4½ volts to operate a loud speaker.

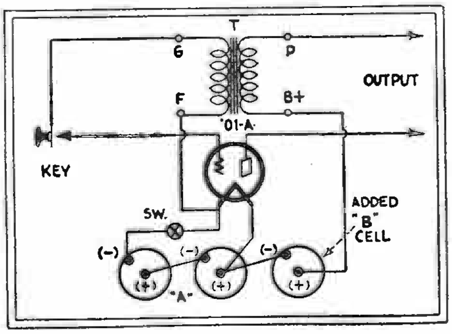

Fig. 4

A very simple oscillator which will serve many purposes; well fitted for code practice.

Such an oscillator gives a loud, pure note in the output circuit; its pitch depends on the transformer used. If desired, this pitch may be lowered by adding a small condenser across the terminals of the primary.

Small, cheap transformers give high-pitched, musical tones; while the more modern transformers of better quality give very low tones. A Samson "Symphonic" transformer, for instance, has a frequency so low that it sounds like a riveting hammer. By substitution of transformers, therefore, we may use the apparatus itself as a means of comparison; the transformer giving the lower note is probably the better for use in an amplifier.

The key has several useful purposes; it may be used to adapt the oscillator for telegraph signalling, over quite long lines, for phones. It may be adjusted to give a

500-cycle note, and used with a loud speaker to instruct a class; for teaching the telegraph code, it has no equal. The writer has found a demand for headphone sets for use by Boy Scouts in their code practice, and it is probable that many such sets can be made up and sold at a profit.

A REPRODUCER FOR THE SHOP

A DYNAMIC speaker, that can be used on practically all makes of radio receivers, is of great help in a repair shop. The Silver-Marshall "Model 851" unit makes it unnecessary to bring the set's speaker into the shop; for it will operate on almost every kind of radio.

The speaker unit is mounted on a baffle board and suspended under the bench by springs which prevent vibration of the bench. The instruction plate is removed from the transformer and placed on the bench panel, with the speaker connections as shown in the drawing. The binding posts are mounted on bakelite strips and placed near the middle of the bench panel.

The four posts above the plate may be used to connect any radio set: a single-tube output is connected to 1 and 3; a push pull output to 1 and 4. If the push-pull amplifier has no output transformer or choke, No. 2 also is connected, to the highest "B+" voltage. The speaker had no direct connection to the voice coil; so the two tip-jacks at the left of the plate were put in series with the voice coil and the transformer secondary. These are shorted when not used for direct connection. The lower two posts connect to the field coil; which has a resistance of about 2000 ohms and is designed for use with 90 to 120 volts direct current. When sets designed for a speaker with less resistance or with higher voltage are tested, a resistance is placed across the field posts to adapt it to the required current. Current for the field is supplied by the shop power pack when it is desired to use the speaker on sets designed for only a magnetic speaker.

We have used this speaker in our service work for about one year and have found it very good.

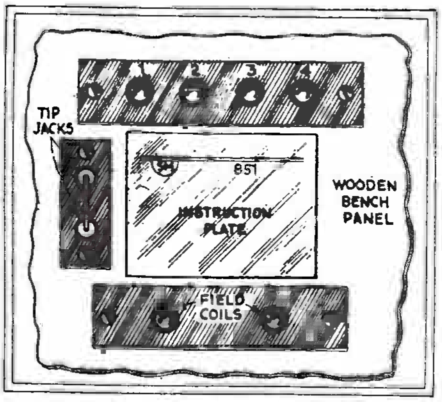

Fig. 5

The connections shown provide a dynamic speaker for bench tests of various chassis types.

TESTING AUDIO TRANSFORMERS

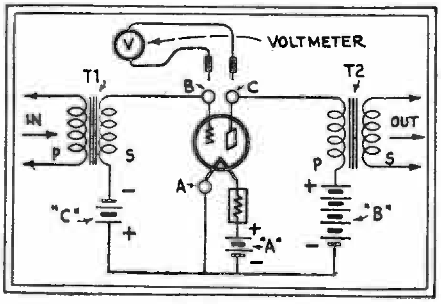

Fig. 6

A quick and easy method of testing the windings of audio transformers in a battery set.

IF CHEAP audio-frequency transformers are used in a receiving set, there is always a possibility of their burning out, that is, in fact, most often the trouble with receiving sets that suddenly go dead. The first thing to be done to a set that will not work is to test the audio transformers; if one of them is burnt out, it must be replaced. It is always best to use as a substitute a transformer with about the same ratio as the one that had to be replaced. Transformers generally "go out" when the receiving set is turned off, because of a voltage surge; and so, when the set is again turned on, there is no sound in the reproducer.

The simplest and quickest way to test the audio transformers is by the aid of a high-reading voltmeter, with a scale covering the highest "B" battery or plate voltage, used in the set. The voltmeter should be equipped with two long, flexible leads ending in test terminals, which can be made by soldering six-inch lengths of bus-bar to the free ends of the leads. Pieces of spaghetti tubing can be slipped over the wires for protection, leaving only the ends bare.

To test the transformers, the receiving set is turned on and all of the tubes in the set are removed; although the batteries are left connected. Now, the primary of the first audio transformer can be tested by touching the test terminals of the voltmeter to the plate and one of the filament prongs in the detector socket. This connects the voltmeter and the detector plate voltage in series with the transformer primary. If the winding is not burnt out, the voltmeter will show a reading; although, because of the resistance of the winding, it will be somewhat less than the actual detector plate voltage.

Similarly, the secondary of this first transformer and the primary of the second transformer can be tested simultaneously by placing the test terminals on the grid and plate prongs of the socket of the first audio amplifier tube. This connects these two transformer windings, the voltmeter, the amplifier plate supply, and the "C" voltage in series. If either winding is burnt out, there will be no reading of the voltmeter. However, since the two windings are in the circuit, the voltage drop through them will be considerable and the meter reading will be low.

The speaker, or the primary of the output transformer, and the secondary of the second transformer can be tested by touching the voltmeter terminals to the grid and plate prongs of the second audio socket.

In all cases, the positive terminal of the voltmeter must be connected to the plate prongs of the sockets.

MODERNIZING VOLUME CONTROL

A FEW notes may be of use to some other Service Men, who have some of the battery-type sets still on their list. The type of set I am using as an illustration is the Crosley "Model 601," which in my experience, has been the most frequent offender in this respect; namely: varying or fluctuating volume, when operating on local stations.

The volume control of this set is a rheostat, regulating the filaments of the three R.F. tubes. When located within a few miles of a broadcast station, it is necessary to keep these filaments at such a low temperature, that the tubes are operating at the critical point where slight changes in the filament voltage cause quite a large change in the filament emission

The remedy, of course, is to operate these filaments at a temperature above this critical point; but, unless the volume can be controlled in some other manner, this results in undesirable loudness. The following method has proved very satisfactory.

Disconnect the filament rheostat, and connect the filament wires directly to the fixed resistor in series with this rheostat; this gives the R.F. tubes slightly less than 5 volts. Remove the rheostat and mount in its place, a 0-500,000-ohm potentiometer (Centralab, or other non-inductive type). It will probably be necessary to take the shaft out of the rheostat, and substitute it for the regular shaft of the potentiometer; since this set requires a long shaft to extend through the cabinet panel. Connect the aerial to the center arm, and the grid and ground to the others; use shielded wire at least for the grid connection (ordinary armored automobile wire works very well). The R.F. choke used in this set may be removed if desired; but, while this results in a slightly increased sensitivity, it also has a tendency to cause oscillation, when the volume is advanced to its most sensitive point.

KEEP YOUR WATCH AWAY FROM THE DYNAMIC

I HAVE experienced something, wnue repairing sets with dynamic reproducers, that should be published to warn other Service Men. I temporarily spoiled my good watch, through magnetization of its steel parts in the flux thrown off by the field windings of a Kolster speaker. In a test, I found the magnet affected a compass some distance away, directly in front of the reproducer.

(Electrical workers have long known the necessity of keeping a sensitive watch away from the fields of motors and generators. The electrodynamic reproducer introduces into radio a piece of apparatus with strong flux; and, while the user of the set does not come close enough to it to experience this trouble, the Service Man should be careful to keep his watch away from the field windings of the reproducer while testing.—*Editor*.)

A Dynatron Service Oscillator

And methods for its use to the best advantage in and out of the shop

A DYNATRON SERVICE OSCILLATOR

THE modulated radio frequency oscillator is a useful adjunct to any Service Man's kit, with which he can perform a variety of vital tests on broadcast receivers. It is simplicity in itself for a technician to line up a ganged tuning condenser—if he carries his own station with him.

Have you ever attempted to balance four or five tuned circuits with nothing but your ear to help you? It is a nerve-straining task. No Service Man who has been called to repair a receiver and, after working over it for a time without finding anything amiss, is suddenly startled with this from the loud speaker: "We regret that, owing to an 'SOS,' this station has been silent for the past two hours"—would ever want to be without an oscillator again. There is nothing more embarrassing than to have the owner for whom you are servicing a set present at a time like this.

But the Service Man who carries an oscillator with him can easily supply his own signal to the set and thus really determine whether it is inoperative.

Unfortunately, however, most oscillators used at present comprise the elements of a young broadcast transmitter. Two vacuum tubes are required: an R.F. oscillator, and an A.F. oscillator to modulate it and thus make the signal audible. Such a device, with its associated batteries or power equipment, is a somewhat complicated piece of apparatus—worthy of a laboratory, perhaps, but rather unwieldy for a Service Man to carry.

Another type of oscillator employs a buzzer to modulate the R.F. current. This disadvantage of this method is that, although it eliminates the modulating vacuum tube, the buzzer must be very carefully packed in a bulky, cotton-filled box to prevent any noise from reaching the ears of the operator directly from the buzzer.

Otherwise, since the volume control must be set near minimum when a set is being adjusted, the sound of the buzzer will overshadow that from the set and preclude the possibility of making accurate adjustments on a device so critical as a tuning condenser.

In addition, both of the above modulating systems suffer in that the modulating pitch is fixed. The vacuum-tube modulator, if of the common type, utilizes two inductances in the oscillatory circuit. Two capacities must be changed to vary the audio frequency, yet keep the percentage of modulation constant. The same is true of the R.F. oscillator. The tuning condenser, since it tunes only part of the oscillatory circuit, also varies the output of the oscillator. Hence, to make sensitivity tests on a broadcast receiver over the entire band of frequencies either a correction factor (which will be inaccurate in all probability) must be introduced for each frequency, or a calibrated R.F. voltage divider must be shunted across the output. All this is a complicated procedure, unsuited to a Service Man's needs.

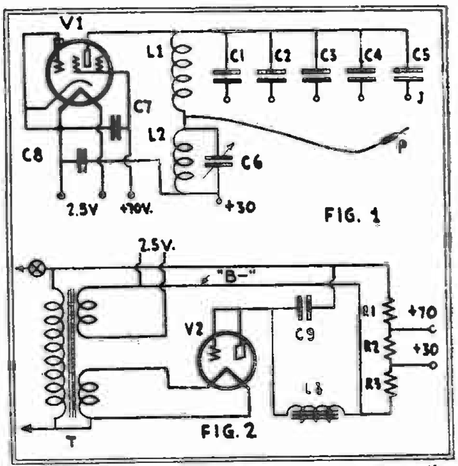

Above, the simple circuit of a dynatron oscillator using a '24 tube: below, its power supply. The whole is light and easily carried with a service kit.

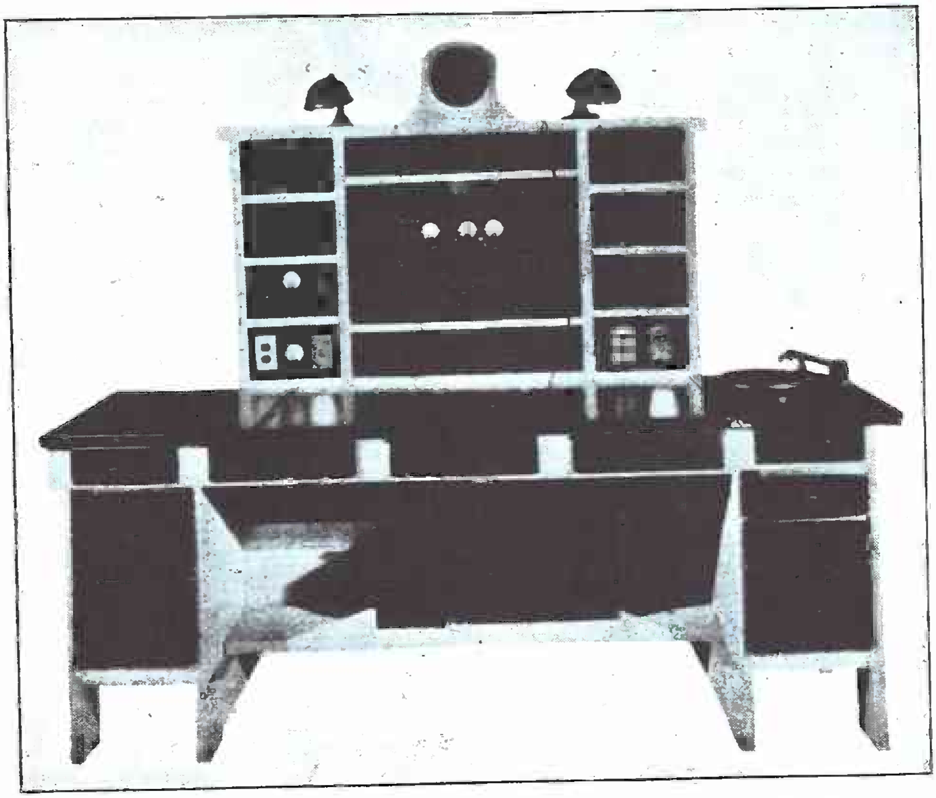

This attractive test bench was constructed by Virden Mabry, of the Mabry Radio Shop, Beaumont, Texas, from second-hand lumber in his spare time. Its elaborate equipment includes: center, a Supreme laboratory test panel and Diagnometer: left, ohmmeter and panel for reading current input to a set; right, antenna and line receptacles and an R.F. oscillator with phonograph pickup for its modulation. Below, portable testing equipment. The battery supply comes into the lowest center panel. How many shops can show as attractive and complete an arrangement?

A "Kink" of the '24 Tube

Fig. 1 is the diagram of an extremely simple Service Man's oscillator which has none of the disadvantages of the above types. Inspection of the diagram will show that it is not of the ordinary kind. It is well known among engineers, but little known elsewhere, that screen-grid tubes possess a very strong "dynatron" characteristic: that is, one where the plate-voltage-plate current graph is negative over a part of the curve; or, in other words, where the curve points down instead of up as usual. Increasing the plate voltage decreases the plate current over this range.

The tube which most strongly exhibits this negative-resistance characteristic is the type '24. It has been shown that, if a resonant circuit is introduced into a tube operating over the negative portion of its curve, it will oscillate at the resonant frequency. This is the principle utilized here.

However, the tube, instead of oscillating at one frequency, is made to oscillate at both radio and audio frequencies, one being superimposed on the other in the output. Since only one coil is used for each frequency, changing any of the constants is very easily accomplished without affecting the remainder of the circuit. The values of parts listed will give an R.F. range from 500 kc. to 1500 kc., and an audible range approximately from 200 to 5,000 cycles per second. This enables the entire broadcast band to be conveniently covered.

The output at the various frequencies will be much more uniform than that from most "tickler" oscillators. The resistance and losses of the oscillating circuits should be as low as possible, however, or the tube will not oscillate at the audio frequency.

Fig. 2 shows a very simple power supply for the oscillator. The transformer has only two secondary windings—2.5 volts for the '24's filament and 5 volts for the '01A used as a rectifier. The filter is of the simplest sort.

Method of Use

The operation of the oscillator is very simple. Apply the proper voltages either from the power supply or from batteries (one cell of a storage battery may be used for the '24 filament) and connect the antenna post of the instrument to that of the receiver. Set the oscillator condensers at convenient values—say 1000 kc. and 500 cycles: tune the receiver to 1000 kc., and the 500-cycle note should be heard.

The oscillator must, of course, be tested and calibrated beforehand on a set whose characteristics are known; using broadcast stations for the R.F. standard, and a musically-inclined ear for the audio standard. For this purpose the A.F. calibration need be only an approximation.

Condensers in a tuned radio-frequency amplifier may be easily lined up. Tune the oscillator to 550 kc., plug your set analyzer into the output tube's socket, place the tube in the analyzer, and set it to read plate current. Then adjust each trimming condenser, starting with the first stage, to get the maximum deflection of the meter. After all the condensers have been adjusted satisfactorily, check your adjustment at 1500 kc. and 1000 kc. If the condensers do not balance at these frequencies, strike a mean between the trimmer settings; favoring the lower frequencies, as most receivers are least sensitive here..

Service Men should find this unit an indispensible addition to their outfits.

Parts Required

L1—Pair of headphones, which serve as the A.F. inductance;

L2—R.F. coil, about 200 microhenries, such as the secondary of a R.F. transformer, used in receivers to couple two tubes together;

L3—Small "B" eliminator choke, of any convenient value;

C1, C2, C3, C4, C5—Tuning condensers for the A.F. range, .0005-, .002-, .005-, .02, and .05-mf. Other values may be interpolated, if desired, for finer adjustment of the audio frequency;

C6—Variable condenser, .00035-mf.;

C7, C8, C9—Filter and by-pass condensers, 1 to 2 mf. each;

R1, R3—Two 3,000-ohm, 10-watt resistors;

R2—One 4,000-ohm, 10-watt resistor;

T—Transformer: one secondary winding, 2.5 volts at 1.75 amperes: the other 5 volts at 0.25 ampere;

V1—One '24-type tube;

V2—One '01A-type tube;

S—Switch.

P and J—Midget plug and jacks, or rotary switch, as preferred.

INEXPENSIVE MODULATED OSCILLATORS

THE oscillator shown in Fig. 3 at A is the best to use if a 110-volt A. C. line is available; it is easier to take on your service trips because it doesn't require any batteries. That shown at B is a good one to use where A. C. power lines are not available.

In the first design (A), the coil L1 consists of about 100 turns of No. 22 enameled wire wound on a 1¾-inch tube with a tap at the 50th turn. The coil L2 consists of 100 turns of No. 28 enameled wire wound on a 1¼-inch tube. These windings should be placed at right angles to each other. The condenser C has a capacity of .0004-mf. The fixed condenser C1 has a capacity of .001-mf., and should have an A.C. working-voltage rating of at least 150. A 201A type tube is used at S and a 110-volt 25-watt lamp.

In circuit B, the coil L1 consists of 100 turns of No. 28 enameled wire, wound on a 1¼-inch tube, with a tap at the 50th turn; the variable capacity has a maximum of .0005-mf.

Two output meters to use with the above oscillators are shown at C and D. Both are good; that of D is the cheapest to build.

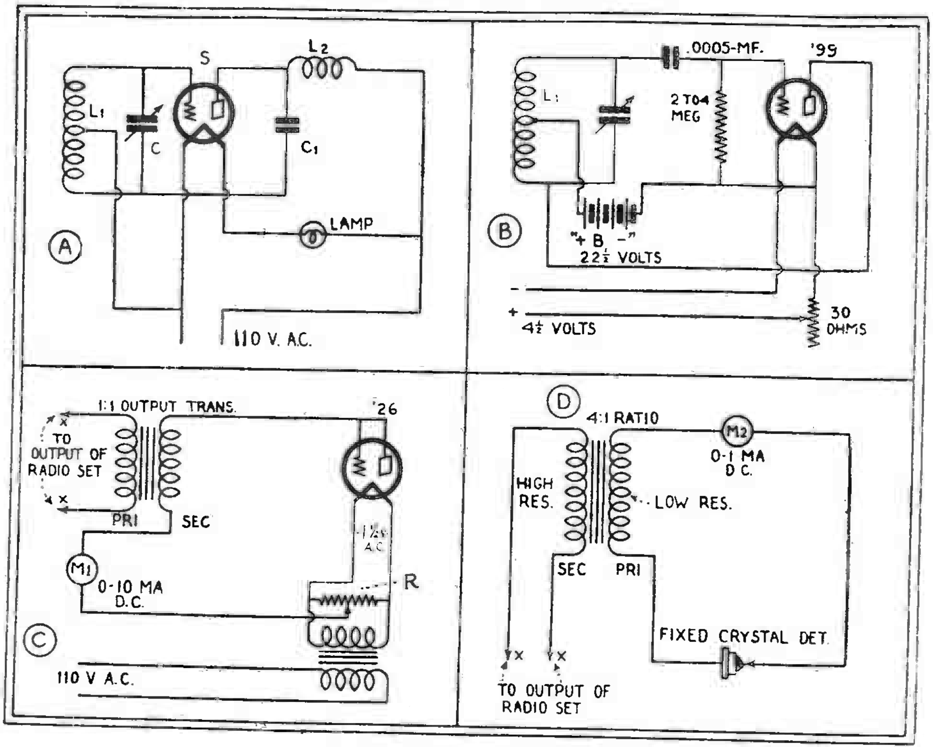

Fig. 3

Upper left, an oscillator operating directly from the light line; B, a battery-operated type. The former takes the 60-cycle hum; the note of the latter is given by the leak-condenser combination at a suitable pitch. The output meter of C is convenient; but that of D is both lighter and less expensive.

IMPROVING OLD TESTING EQUIPMENT

IF you have an old type tube tester, it can probably be easily adapted to test the modern tubes. I have a Hoyt tester, made several years ago for testing battery tubes, and did a little experimenting with it recently. A few slight additions have made it possible to test nearly all types of tubes with it.

The operation of this tester is such that one meter gives three readings. First, the rheostat is turned up until proper filament voltage for the tube is shown on one scale; then, when one button is pressed, the pointer drops back to read plate milliamps on another scale. With this button still down, a second is pressed, which ties grid and plate together; and the pointer goes up to give space current reading. Current is supplied by a 6-volt storage battery and a 22½-volt "B" battery.

Modernizing the Tube Tester

First, I procured a "Na-Ald" adapter having four legs and five holes; this permits placing 5-prong tubes in the socket. I found, while endeavoring to get a reading on 27's with this adapter, that the rheostat would not carry the load and would start to burn. Accordingly, I procured a Carter 10-ohm rheostat having a capacity of 2.2 amps; one side of this I connected externally to the "A" binding post of the tester, the other side to the external "A—" terminal of the socket. The rheostat is simply laid on the bench and attached by the flexible wires.

The effect of this is to connect the new rheostat in parallel with the old: when

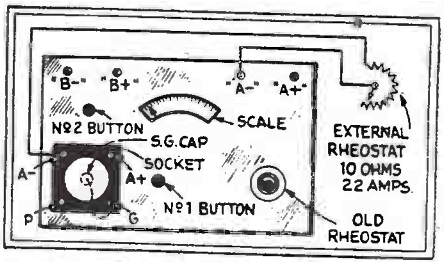

Fig. 4

The added rheostat and adapter permit UY tubes to be tested with an old-style unit.

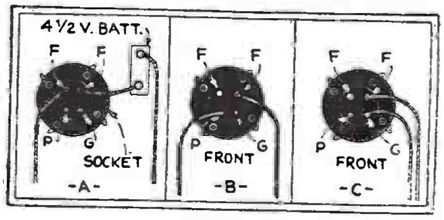

Fig. 5

Using the adapter holes as tip-jacks makes external connections easy on a low-priced analyzer.

either is turned off the other operates independently. For testing heater-type tubes, the original rheostat is turned completely off and the new rheostat used. For other tubes, the new rheostat is turned completely to the left and it is in effect out of the circuit, leaving the other rheostat to operate as before the change. With the new rheostat in circuit, tests are made in the usual way and the two readings are secured as with other tubes.

Now came the problem of testing screen-grid tubes. I took a piece of wire and attached a clip to each end. Then, with the tube in the adapter (See Fig. 4) I connected the grid terminal of the socket to the grid cap at the top of the tube. This had the effect of tying the screen-grid and control-grid together and the meter gave readings in the usual way. Then I found that, by shifting the clip over to the plate terminal of the socket, and connecting that with the control-grid cap, I could by pressing the two buttons get a third reading which would be higher than the other two. The effect of connecting the plate of the socket to the grid cap of the tube and pressing No. 1 button was to give the plate-current reading with grid and plate tied together, while the screen-grid acted as a regular grid. Then, when No. 2 button was pressed, the two grids and plate were tied together, and the total space current could be read. The three readings will indicate any abnormality in the screen-grid.

Utilizing a Low-Priced Analyzer

A Beede set analyzer which I have, though listing at only $25, is a very practical instrument, giving all the ordinary socket and tube tests through the use of one A.C. and one D.C. meter with a rotary switch which cuts in various resistances for the different scales. There are no provisions in this instrument, however, for continuity testing and making separate voltage tests.

This deficiency, I found was very easy to supply; and the usefulness of the device has been very much enhanced by a simple plan, as follows.

First, prepare a short wire about 4 inches long with one tip to be plugged into the filament connection of the 4-hole adapter. The filament prong of an old tube, soldered to the end of the wire, served very well for this. Attach the other end of the wire to one side of the 4½-volt battery which is part of the analyzer. This can remain permanently attached. Next, prepare a long wire with a similar prong, and plug it in to the other filament hole of the adapter. A third wire (a clip on either end is handy for this one) is now attached to the other side of the battery; the rotary switch knob is turned to "A-10;" and you have the 4½-volt battery in series with the 10-volt scale of the meter and the two test leads. This arrangement (See Fig. 5A) can now be used for ordinary continuity testing. The resistance of the meter is 100 ohms, and external resistances can thereby be roughly estimated.

Now, to one of the long wires, solder one of the thin legs of the old tube and plug it into the plate hole of the adapter. Plug the other long wire into the filament hole at the right (facing front of tester). Turn the knob to "B-500" and your meter will give voltage tests on the 500-volt scale (Fig. 5B).

Now, by shifting the wire from the plate to the grid hole while leaving the other in the filament connection, and turning the knob to "C-50," you can make voltage tests on the 50-volt scale; while, with the same connections, by shifting the knob to "C-100" you can make voltage tests on the 100-volt scale (Fig. 5C).

By means of these connections you can also check up the percentage of accuracy of the meter. Test a known voltage, such as a block of 135 volts of "B" battery, and note the reading. The percentage of inaccuracy will be fairly constant, and allowance can therefore be made for the error to get true readings. I found mine to read about a third low on the high-voltage readings—that is, 135 volts reads about 90 and 90 reads about 60.

Eliminating Warming-Up Wait

In a distributor's service shop, where testing is being continuously done with heater tubes, a useful method is employed to keep the tubes constantly heated and ready, without any waiting after the tubes are placed in the set.

A line of several sockets is mounted against the wall beside the bench, and 2½-volt filament current is supplied to them from a power transformer. As the tubes are removed from the set under test, they are placed in this rack of sockets, where they remain lighted and ready to operate instantly when inserted in the next set.

It can be seen that, in the course of a day's work, this idea saves a great amount of time.

INCREASE THE METER'S RANGE

MANY good Weston or Jewell meters, designed for the old RCA battery-model receivers, can now be bought very cheap in some of the salvage stores. The fan who cannot afford to buy a new voltmeter, or milliammeter, can make use of an old instrument by a few changes and convert it into a volt-ammeter of all ranges; with great saving to his purse, since these meters can be bought for around a dollar to a dollar and a half.

As the diagram shows, the case is removed from the meter and a small piece of insulated stranded wire is soldered to the resistance terminal which leads to the armature at the bottom of the meter. (Care should be taken not to solder to the terminal that leads to the terminals of the meter). A small hole is drilled in the bakelite back, and the wire is drawn through. The case is then replaced, and the meter is ready to be mounted on a small box.

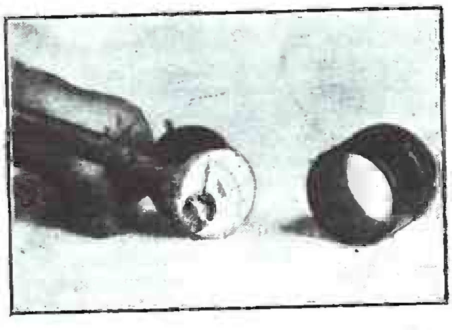

A voltmeter, with its case removed, undergoing the operation

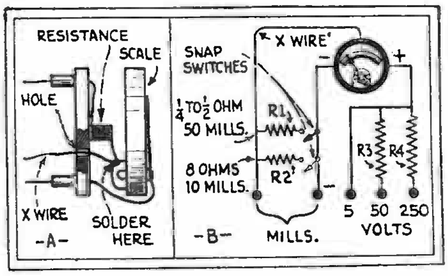

A diagram, showing the connections to the meter illustrated above. With the action used, R3 is 5625 ohms; R4, 61,875.

Various meters have different internal resistances and draw more or less ohms per volt, so the correct resistance values cannot be given. Jewell and Weston meters, mentioned, however, have a resistance of 125 ohms per volt. So, for each volt to be added, a resistance of 125 ohms should be used.

The meter has already a 5-volt scale, with a 625-ohm resistance built in. To increase the voltage of this meter to 50, a total resistance is required of 50 x 125 = 6250. The meter already has 625 ohms resistance; subtract this from 6250, and the additional resistance required is found to be 5625 ohms. A fixed resistor of this size is quite hard to obtain; and a good substitute is one of variable type, with 6000 ohms maximum, adjusted to the required length.

To obtain milliampere readings from the meter, the wire which was soldered to the armature is used with the terminal of the meter which connects directly to the other winding of the armature. Resistance wire from old, heavy rheostats will answer nicely as a shunt.

RENEWING THE SOLDERING IRON

AS they grow older, many electric soldering "coppers" grow weak. Often this is due to oxidization of the surfaces where the point joins the boss which protects the heating element; for heat is much like electricity in preferring clean contacts. The remedy is, of course, to remove the point and brighten the surfaces. Some solder run into the screw joint will help the transfer of heat to the point. Also, if the metal parts of the tool, except the point, be covered with wrappings of asbestos paper, much more of the heat generated will be driven to the point of the tool, instead of being radiated by the air, and hotter solder, with stronger and more quickly-made joints, will result.

KILLING MOTOR-MADE "STATIC"

Wireless beam stations, receiving wavelengths in the neighbourhood of 10 meters, are subject to considerable interference from passing motor-cars, which radiate shortwave oscillations from the ignition systems. In order to avoid this type of disturbance, a screen of short conductors is sometimes hung across the road forming a kind of archway. The conductors are grounded at one end and act as reflectors to absorb the disturbing radiation away from the beam aerial.

MEASURING RECEIVER OUTPUT

IT is usually recommended that Service Men attach the leads from their output meter directly across or in series with the speaker voice coil. I have found that, in most commercial receivers, these speaker connections are soldered and in rather inaccessible places, making a quick and efficient connection impossible. In order to overcome this difficulty I have made a simple adapter plug, for bringing out the plate lead of an output tube, from an old four-prong tube base and a subpanel socket. The leads from this adapter are plugged into the primary of an output transformer which is housed in a box with the galvanometer and meter-shunting resistor (Fig. 1.) The transformer should be of the type used to actuate the voice coil of a dynamic speaker, and capable of safely carrying the current from a '50 tube without overloading. This arrangement permits of quickly and easily attaching and detaching the meter, and works well enough for all practical purposes in the repair shop; such as aligning condensers and testing tubes in various sockets in the set for best performance, when used in conjunction with single or push-pull output circuits.

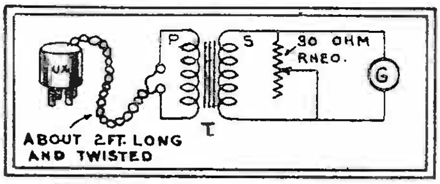

Fig. 1
An output meter is easily connected by using this adapter with the power tube and socket.

TESTER FOR HEATER-FILAMENT TUBES

AS every Service Man knows, it is very hard to detect the heater-type tube that fades in and out during a program. As a rule, these tubes always continue to perform normally when the Service Man is near. Sometimes it takes an hour after heating before the filament open-circuits. Of course, the Service Man cannot stay until the tube fades to detect it; and a great deal of time is lost this way.

A tester for this purpose was made and found to be quite efficient. A UY socket with an old filament D.C. meter, from an R.C.A. set, wired across its filament terminals, is mounted on a small square box, which carries also two binding posts and a heavy-duty four-ohm rheostat. Connections are made as shown in Fig. 2.

The storage battery of the writer's service car is used for the filament supply, to eliminate expense and too much carrying of equipment into the customer's home. The suspected tubes are carried to the service car to be tested. One lead of the tester is fastened to the frame of the car, and one to the terminal of the ammeter.

For testing filaments of heater tubes, the rheostat should be turned to 3¼ volts. If, after 3 minutes, the filament does not die out, the tube is O.K. as far as the filament is concerned. Two sockets and two rheostats may be used, if time is very valuable. A 3¼-volt filament transformer might be used instead of the battery, to take its current from a light socket, if it were desired to take the tester into the house.

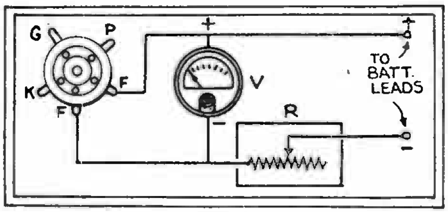

Fig. 2
One of the problems reported by Service Men is that of the temperamental tube, which tests O.K. This device puts it under a more rigorous test.

Simple Test for Ground

The writer was recently called to service a popular make of radio receiver recently. The complaint was humming, loss of sensitivity and selectivity; testing tubes, circuit and aerial indicated normal working order. To test the ground, however, was quite a task; for the wire was run through the floor and around the room to a radiator in the next room. The flooring would have to be pulled up to examine the wires. So, taking the live, or ungrounded, 100-volt A.C. wire, by passing it through a 100-watt lamp and connecting to the ground wire, it was found that the ground was open. The radiator was grounded; for the lamp immediately flashed up when the wire was touched to it. Another wire, run around the molding and connected to the radiator, cured the set of its ills.

This method is especially useful in the country, where the ground is made by a pipe driven into the ground. The efficiency of the ground is poor if the bulb burns dim, and good if the bulb burns brightly. The aerial can be tested in this manner for grounding.

TESTER ATTACHMENT FOR SCREEN-GRID TUBES

SERVICE MEN and several dealers have asked me how I changed over my tube tester (a Sterling "510") in order to use it on screen-grid tubes.

In the tester mentioned (as also in the "R-509") there is a resistor connected to the grid prong of the UY, or 5-prong socket. Unsolder this connection, leaving the "G" of this socket connected to the "G" of the UX socket on the tester. Then connect this resistor (which leads on the other side to a switch button) to a double-pole double-throw switch; which is to be mounted on the side of the tester, and to one center terminal of which is attached a suitable lead and screen-grid cap as shown in the diagram herewith. When this switch is thrown down, ordinary UX and UY three-element tubes may be tested. When it is thrown up, and the cap lead applied to the cap of a '22 or '32 in the UX socket, or a '24 in the UY socket, readings on these tubes may be taken in the regular manner.

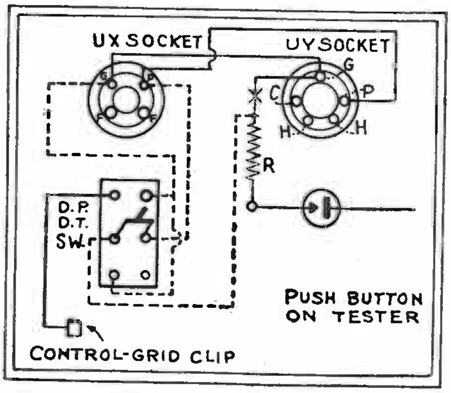

Fig. 3
This switching connection, applied to an old-style tester, makes it easy to take readings on the screen-grid tubes.

The filament-emission and plate-current readings of the '22 and '24 will be similar to those for other tubes listed in the instructions supplied with the tester; filament emission 40 to 65; plate current, button up, 1 to 2½; plate current, button down, 4 to 7. I have not yet had a chance to test the UX-'32; but the same principles will apply.

MEASURING SMALL RESISTANCES

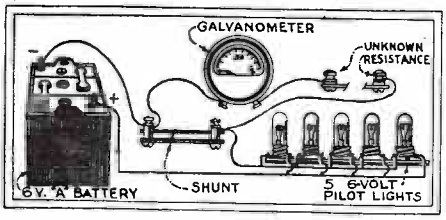

The galvanometer must be protected by a line ballast and a shunt of very small resistance; so used, it will measure extremely low resistances.

DYNAMIC speakers, which gave poor volume or none at all, were a recent problem of mine. Those which wouldn't work were easily repaired, because a circuit tester would locate the trouble. On the other hand, the first weak one tested all right; but by patiently unwinding the voice coil (which was in two layers) I found that part of it was shorted out. It took me a long time to find this out; so for the rest of them, I decided to find some easier way of measuring the resistance. As this is normally but three ohms, a dead short made no difference in the reading of the circuit tested.

I have, however, a Jewell thermocouple galvanometer, which I hooked up as per the diagram herewith. This meter has an internal resistance of only 2.5 ohms; so a very small resistance should be used for the meter shunt. When the right value is found, the meter will read full scale for a dead short and half-scale for three ohms, I use one good voice coil as a standard and check the rest by it. The five parallel lamps shown are 6-volt pilot lights, but could be replaced by a fixed resistor of 10.5 ohms. The source of power is a 6-volt storage battery. The shunt I used was a six-inch length of No. 20 solid copper wire.

This instrument is very sensitive; a difference of half an inch in the shunt will show a difference of two or three degrees on the meter. If the meter is calibrated with standard resistors, it will be found to read accurately from 0 to 25 ohms. From five ohms down to zero, there is a reading of ten degrees per ohm.

How To Build *This* Oscillator—Tube Tester

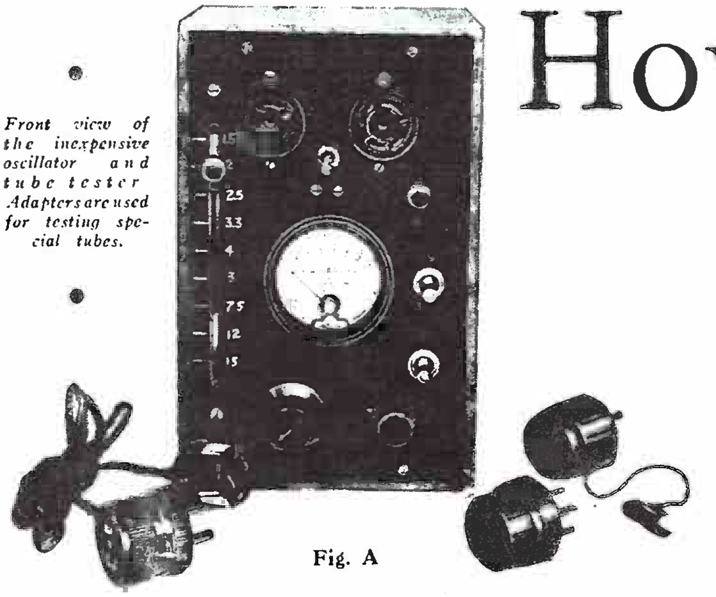

Front view of the inexpensive oscillator and tube tester. Adapters are used for testing special tubes.

Fig. A

SEVERAL of the more expensive test outfits on the market contain, in addition to the set analyzer, an A.C. tube tester and an oscillator. The usefulness of this additional equipment is well recognized; however, the extra cost is prohibitive to many. Furthermore, some Service Men prefer the simpler set analyzers because of their compactness and light weight. This article describes a unit which contains a tube tester and oscillator which may be carried in the car and taken into the customer's home when necessary.

Originally, this outfit, illustrated in Figs. A and B, was built as a tube tester only; later, by a few simple additions, it was made to serve also as an oscillator. Provisions for tube rejuvenation were added because there are still many sets using '01A and '99 type tubes.

For the rejuvenator, simply insert a toggle switch in the plate circuit (SW.3 in Fig. 1). Opening this switch breaks the plate circuit so that tubes may be flashed and cooked. To rejuvenate '99 tubes, they should be flashed for about 5 seconds at a voltage of 12, and then cooked for a period of 10 minutes at about 4 volts. For '01A tubes, they should be flashed at 15 volts for a period of about 5 seconds and then cooked at 7.5 volts for 10 minutes.

When constructing the transformer, the additional taps are provided to supply the higher voltages necessary for flashing the tubes. The primary is wound with 770 turns of No. 28 enameled wire. The secondary is wound with 110 turns tapped at the 11th, 15th, 18th, 24th, 30th, 37th, 55th, and 88th turns, corresponding to voltages of 1.5, 2.0, 2.5, 3.3, 4.0, 5.0, 7.5, 12, and 15. The first 18 turns are wound with two strands of No. 18 bell wire because of the 1.75-ampere drain of the 2½-volt tubes. For the 18th to the 55th turn, one strand of No. 18 is used. The rest of the transformer may be wound with finer wire, about No. 24 enameled. The transformer core is best obtained from a burnt-out power transformer out of an A.C. receiver. It should have, preferably, a shell-type core with about a 1-in. cross-section.

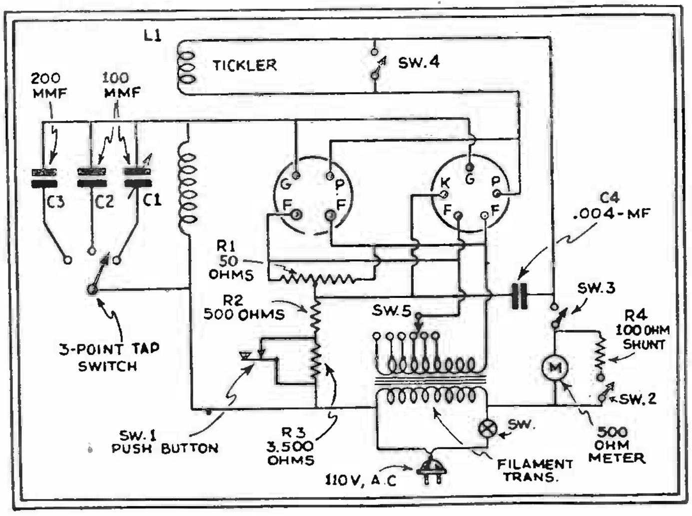

Fig. 1
Schematic circuit of the tube tester—oscillator.

The filament switch SW.5 shown in Fig. 2 was constructed from junk-box parts. It consists of a brass rod and slider from an ancient tuning coil, and a contact strip made of rivets set in bakelite. The rivets should be countersunk so that the slider, when being changed from one contact to another, will not short a section of the transformer. A suitable switch may be purchased if preferred. Yaxley or Best manufactures a nine-point rotary switch with break between contacts.

The Oscillator

To add an oscillator to this tube tester, notice that it is only necessary to connect a coil and condenser in the grid circuit, a tickler coil in the plate circuit, and a bypass condenser from tickler to cathode.

For compactness the coil used was a spider-web from an old Crosley receiver. Any coil which was designed to cover the broadcast band with a 350-mmf. condenser may be substituted. The variable condenser is a 23-plate, 100-mmf. Pilot midget. A tap switch shunts in a 100- or a 200-mmf. condenser to cover the medium and high wavelength portions of the broadcast band.

Switch SW.4 shorts the plate coil to stop oscillation when the unit is used in its original form as a grid-change tube tester. This switch has another use, however, for with it tubes may be tested for plate current when oscillating.

Another kink worth mentioning is the method of testing tubes for total emission. The adapters used for testing screen-grid tubes have the grid and plate prongs connected together, so that three-element tubes, when plugged into these adapters, will show total emission readings on the meter.

This unit then, gives three methods of tube testing: grid change (mutual conductance), oscillation current, and total emission current. Although the first is usually sufficient, the use of the other methods is convenient at times.

Note that the grid change button SW.1 is connected to operate in the opposite manner from the method used in most tube testers. That is, depressing the button *opens* the short across the large resistor so as to increase the grid bias, and thus *lowers* the plate current. The fact that the meter reading drops instead of increases when the button is pushed, makes no difference since the change in plate current is the important consideration. With the switch so connected, when the button is up, the tube has applied to it the proper bias for use as an oscillator.

The proper meter for this instrument is a 10-ma. milliammeter with a 100-ma. shunt. However, the meter illustrated is a 7-volt Weston voltmeter which was secured from a cut-rate supply house.

THE Service Man who recognizes the need for a compact R.F. oscillator and tube tester, which is well within his financial means, should follow the description given herewith. Complete construction details, including that for the adapters necessary to test special tubes, are included. It should prove especially interesting to the man who is constructing his first tester. It may be built for less than ten dollars.

Many Service Men will have a voltmeter on hand which may be substituted. The meter used in this particular instance reads about 14 ma. full scale. The multiplier resistance was difficult to remove, so it was left in place. It gives some protection to the meter in case of an accidental overload. Since the resistor in the meter was about 500 ohms, a 100-ohm shunt was used to increase the meter reading to approximately 85 ma. Exact adjustment of the shunt size is unnecessary. No definite meter range is required. The tester is calibrated by testing a set of tubes that are known to be up to standard.

No provision has been made in the unit for a 175-kc. oscillator, since it is felt that in any case where such an oscillator is needed for aligning a superheterodyne, the set should be taken to the shop where a more precise oscillator should be available. However, should the constructor so desire, he may include a larger coil at a slight increase in bulk and switching complications.

Figure 3 illustrates the adapters for testing screen-grid tubes and pentodes. They are made from Pilot sockets and cut-down tube bases.

Since most of the parts for this outfit were supplied from the junk box, it was built at a total cost of less than $10.00. When used in connection with a standard set analyzer, it has proved thoroughly satisfactory for regular service work.

Using the Tester

An examination of the diagram will reveal the presence of two sockets, one for four- and the other for five-prong tubes. To test a four-prong tube, all that is necessary is to insert it in the left-hand socket, close SW.4 and SW.3, first being sure that the filament switch is set at the correct tap. To change the scale of the milliammeter, close SW.2, For a mutual-conductance test, all that need be done is to close push button SW.1; this changes the bias on the tube which, of course, results in a change of plate current.

For testing heater-type tubes, they are inserted in the right-hand socket of the tester; the test procedure is exactly the same as outlined above.

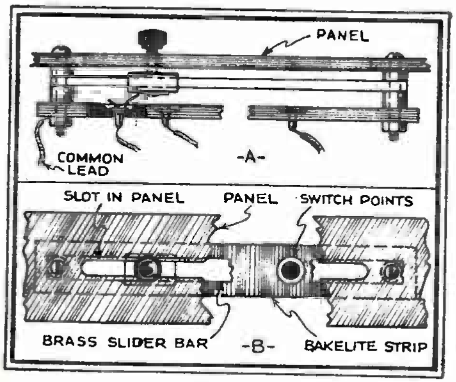

Fig. 2

At A, a side view of the slider arrangement and at B, a section view.

Figure 3 illustrates three types of adapters which may be used with this tester when four-element and pentode tubes are to be tested. At A, an adapter is shown for testing the '22 types; at B, an adapter for '24 type tubes; and at C, a pentode adapter. The four-prong adapter is inserted in the four-prong socket and the five-prong adapter in the five-prong socket in the tester.

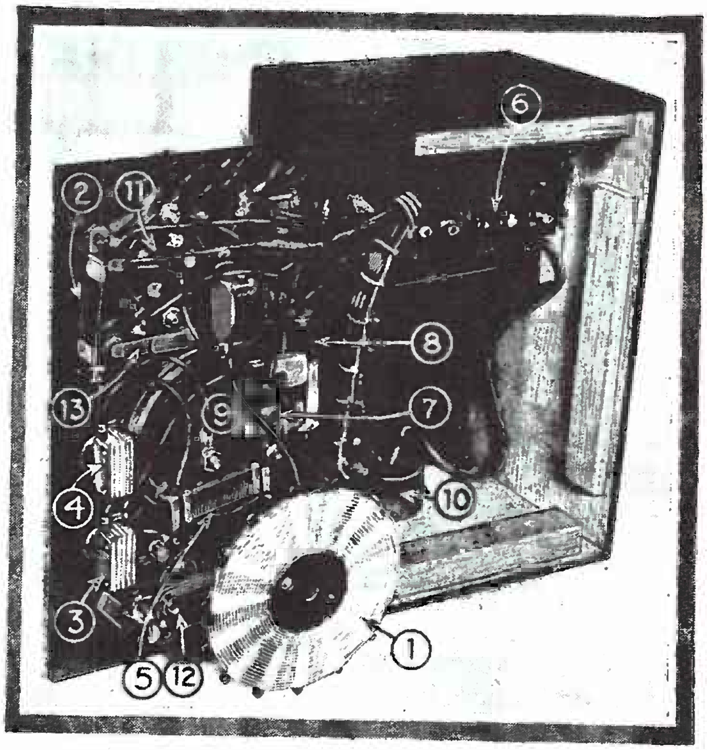

Fig. B

At (1) the oscillator coil; (2) R4; (3) SW2; (4) SW4; (5) R1; (6) power transformer; (7) C4; (8) R3; (9) milliammeter; (10) power socket; (11) 5-prong socket; (12) tuning condensers; (13) SW1.

A valuable feature of this tester is the oscillator. By opening switch SW.4, the tube that is being tested starts to oscillate, and the new plate current may be read on the milliammeter M. In superheterodyne receivers, it is imperative that the oscillator be capable of producing oscillations over the entire broadcast band. To do this, all that is necessary is to vary the position of the three-point tap switch and note the plate-current reading while doing so. If the current changes appreciably while changing from one tap to another, then the tube is a poor oscillator and should be replaced.

By keeping a tube in the tester itself, and varying the position of the three-point tap switch, it is possible to use this tester as a modulated R.F. oscillator for aligning tuning condensers. It will be noticed that the plate voltage is obtained directly from the A.C. line, and therefore the plate voltage is modulated at the same frequency as the supply line—which in most cases is 60 cycles.

If a spider-web coil is not available for the oscillator, then a standard broadcast coil (about 60 turns on a 2-in. diameter tube) may be used. The tickler may be wound with about 30 turns of the same size wire adjacent to the secondary. It is not absolutely essential that the turns be exact, for the wavelength may be closely adjusted by the tuning condensers if so desired.

The experimenter should have no trouble in constructing this very versatile tester.

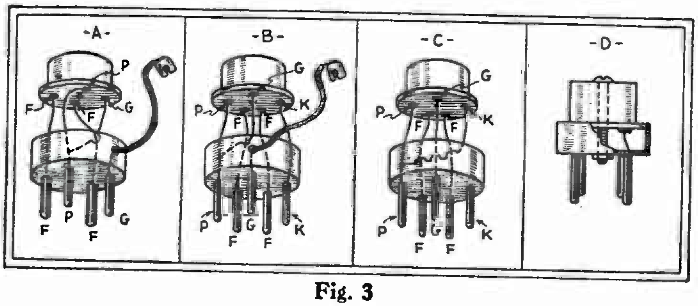

Fig. 3

At A, the adapter for testing four-prong screen-grid tubes: at B, the adapter for testing five-prong screen-grid tubes; at C, the pentode adapter; the assembled adapters look like that shown at D.

An A.C. Beat-Frequency Oscillator

A device for the well-equipped Service shop, and for the laboratory of the careful experimenter

THE A.C. beat-frequency oscillator is an easily-built instrument of great utility to Service Men and to all those engaged in the testing, repair or manufacture of audio-frequency apparatus. It is also a useful device for experimenters, for broadcast stations and for owners of amateur transmitting stations.

Its purpose is to make instantly available a source of audio frequencies throughout the entire audio range. This particular oscillator can be used wherever alternating current is available, as it can be built for either 60 cycles or 25 cycles. No batteries whatsoever are necessary. When completed, it constitutes a precision instrument, comparable with the finest commercial oscillators, and having the important advantage that it can be built for but a fraction of their cost.

Uses of the A.F. Oscillator

In the testing and manufacture of loud speakers, this oscillator performs an extremely useful function. It is ideal for determining loud-speaker response and also for the determination of paper-rattle frequencies. It can be used in the comparison and selection of loud speakers, and also to determine the frequencies which cause the voice coil of a dynamic speaker to hit the pole pieces. These offending frequencies can then be filtered out, thus improving speaker performance.

The beat-frequency oscillator can be used by the owner of an amateur telephone transmitter to determine the frequency-characteristic of his amplifier. When used to modulate an R.F. oscillator, the beat-frequency oscillator can be utilized to perform "overall-gain" and "fidelity" tests on any radio receiver.

It enables the talking-picture Service Man to study the effects which different frequencies have on the acoustics of the theatre. It is useful, in servicing electric phonographs, to feed the oscillator into the amplifier, in place of the pickup; thus locating faults in the reproduction.

In fact, it may be considered as an absolute necessity for the Service Man who wishes to perform efficient work on audio-frequency apparatus.

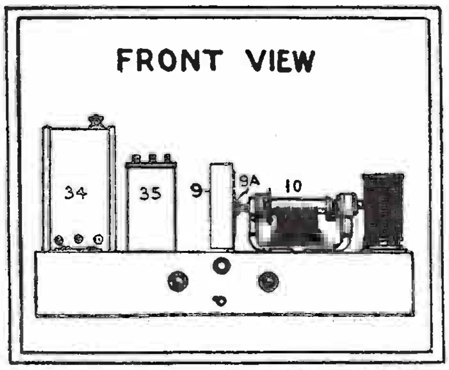

Fig. 2

This oscillator may be built behind any kind of panel; its output is taken from two binding posts at the rear.

Principle and Construction

In the A.C. beat-frequency oscillator, the measuring frequency is obtained by beating the outputs of two R.F. oscillators against one another; the resultant frequency is rectified by a detector and then amplified. The range of this oscillator is from approximately 30 cycles to above 10,000 cycles.

It comprises (Fig. 1) two oscillators (4A) and (13), a detector (17), and an A.F. amplifier (26); all these tubes are of the '27 type. An '80-type full-wave rectifier tube (38) is used. The frequency of one oscillator (4A) is fixed at 100 kilocycles; while the frequency of the other (13) can be varied to 20 kilocycles away from the fixed frequency. Both oscillators are coupled to the grid circuit of the detector tube. This system of coupling the oscillators to the detector, supplying it with a low voltage from each oscillator, is such that the tendency of the two oscillators to pull into synchronism, as zero beat is approached, is eliminated. The detector output is fed to the amplifier by an impedance-coupled system of the "autoformer" type; with the result that constant amplification is attained over a wide range of frequencies.

The two oscillator coils (1) and (6) are long-wave units, each having two fixed windings and a rotor. They are of the plug-in type and of low-loss design, having a confined magnetic field of extreme uniformity. The midget condenser (12) is used to correct any slight inaccuracies in the fixed condensers (11) and (2), or in the coils in the plate circuits of tubes (4A) and (13). The variable condenser (10) is used to tune in the desired audio frequencies over the entire range. Minimum harmonic generation, with highly satisfactory wave-form, can be obtained by keeping the coupling of the rotors of coils (1) and (6) at a minimum. If *the coupling is too tight, the percentage of harmonics will be large.*

Four automatic ballast resistors are used to regulate the flow of filament current. Volume is controlled by the variable resistor (24). The "B" supply is furnished by a power compact; a separate transformer serving for the filaments of the four '27 tubes. A standard voltage divider is used.

In appearance (Fig. 2) the A.C. beat-

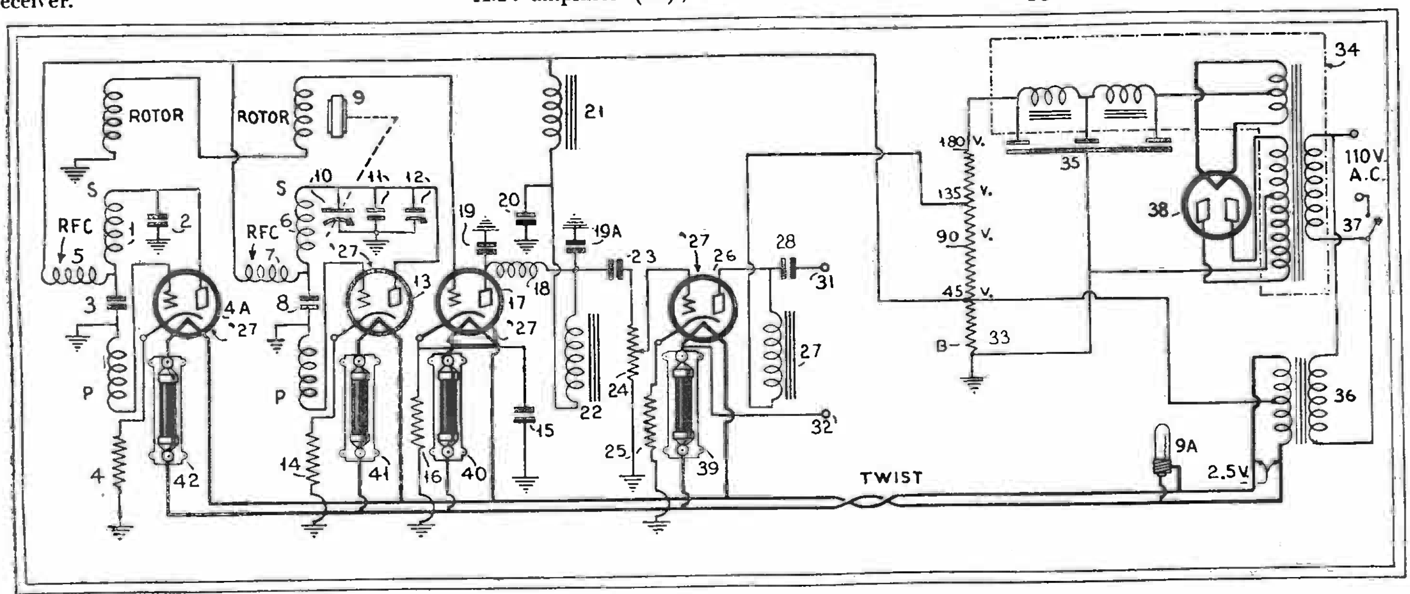

Fig. 1

The complete circuit of the beat-frequency oscillator: as its name indicates, the pure audio note is produced by heterodyning the variable frequency of the oscillator 13 against the fixed frequency of the oscillator 4A. The fixed-tune capacities 2 and 11 should be closely matched.

frequency oscillator resembles the conventional radio receiver. It is assembled on an aluminum chassis, with a great many of the parts below the deck of the chassis and with all wiring underneath and out of sight. The five sockets are mounted from below, with only their circular portions showing above the deck.

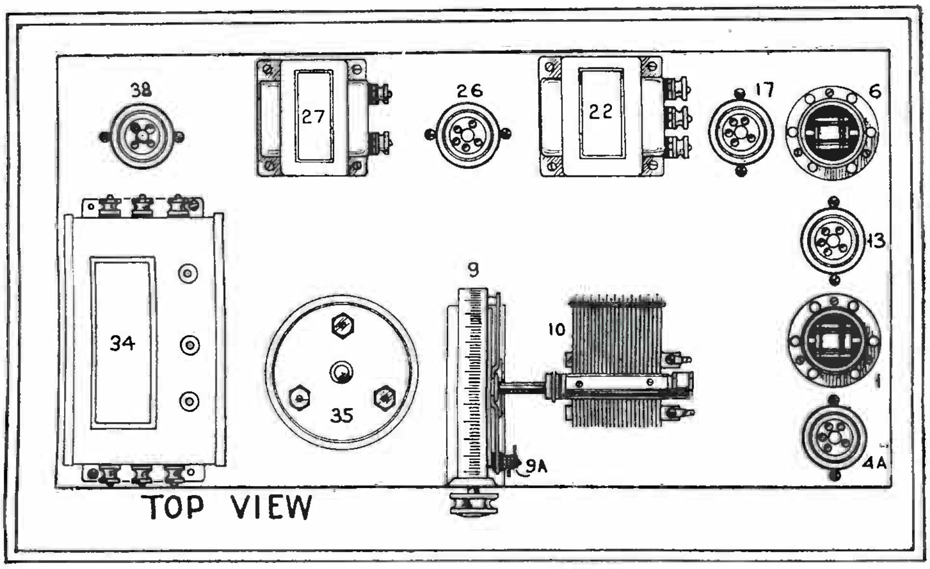

Fig. 4

The drum dial 9 fits into a cut-out in the deck of the chassis, as shown in Fig. 3 below. A chart of frequencies, corresponding to dial readings, should be prepared by comparison with notes of known pitch.

Details of the Assembly

The chassis is bent from sheet aluminum and cut out as indicated in the "chassis details" illustrated (Fig. 3). It is placed face downward on the workbench, and the various parts shown in the bottom view (Fig. 5) are mounted in their correct positions. The sockets are mounted first, then the filament transformer (36) and the choke (21); next the voltage divider (33), the four resistors, the various fixed condensers, the four ballasts and finally the three R.F. chokes. The binding posts are mounted on the rear chassis wall, and the power switch (37), the midget variable condenser (12) and the volume control (24) on the front chassis support.

The values of the capacities shown at (2) and (11) are .00035-mf. each; it is essential to use components of precision here. The value desired may be attained by the use, instead of each of the single condensers shown, of a .00025-mf. midget in parallel with a .0001-mf. Very small components are obtainable in units of great precision for this service; those specified are best adapted.

After mounting the various parts below the deck of the chassis, the latter is turned right-side up; and the drum dial and the variable condenser are mounted (Fig. 4). The dial's base fits into the slot cut into the chassis, thus bringing the center of the drum level with the shaft of the variable condenser; a hole is drilled in the front support of the chassis for the drive-shaft. The two audio chokes (22) and (27) and the power pack (34) are mounted next; then the block condenser (35) and, finally, the coil sockets (1) and (6).

The wiring is quite simple. The primaries of the power compact (34) and the filament transformer (36) are connected in parallel, with the switch (37) on the power-source side; so that, when the switch is open, both pieces of apparatus will be disconnected from the line. The filament circuits are next wired in, taking care to twist all pairs of filament leads. Grid, plate and cathode circuits are then wired in, and also all by-pass condensers. Wiring the "B" supply completes the entire job.

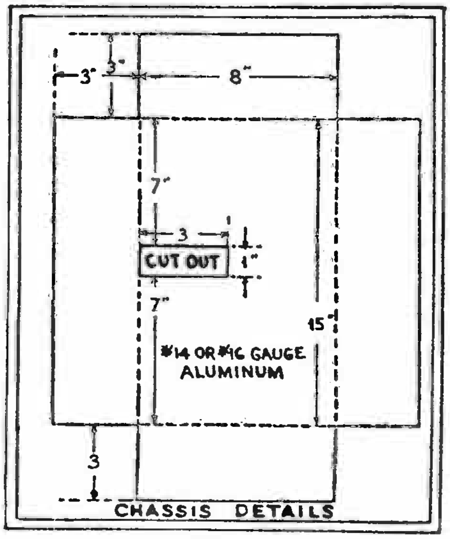

Fig. 3

The chassis mounts every part of the beat-frequency oscillator; it is cut from a single sheet of metal, as shown, and bent to form a pan.

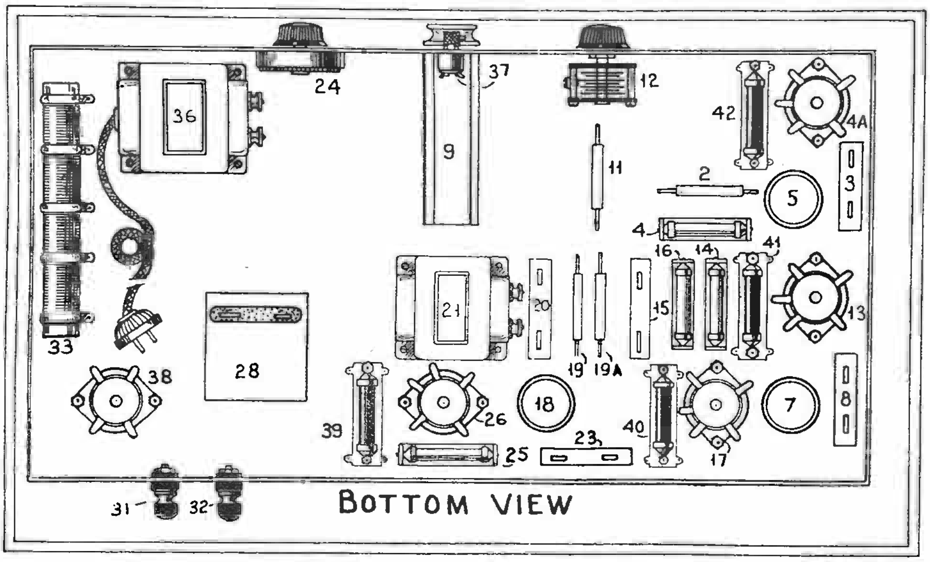

Fig. 5

The greater number of components are mounted under the chassis' deck; the capacities 2 and 11 may be obtained most precisely, by paralleling two midget components for each.

In wiring in the oscillator coils (1 and 6), their 60-turn rotors are connected in series in the grid circuit of tube (17). The 396-turn winding of each coil is connected in the plate circuit of its respective oscillator tube, with the 99 2/3-turn slot winding in the grid circuit.

In adjusting the oscillator, the first step is to determine whether the tubes are oscillating; this is done by touching the grid connections at the sockets and obtaining the grid clicks. Then turn the variable condenser (10) to minimum capacity and adjust the midget condenser (12) so that no signal is heard in the 'phones or speaker. At zero of condenser (10), tubes (4A) and (13) should be tuned to the same frequency; namely, 100 kilocycles.

After the above adjustment has been made, all desired frequencies will be obtained as condenser (10) is tuned in. Using three or four standard tuning forks of different pitch, it is possible to plot a curve and accurately calibrate the beat-frequency oscillator, so that, by referring to the dial reading, the frequency given out by the oscillator will immediately be known.

List of Parts

One .0005-mf. Hammarlund "Mid-Line" variable condenser, type ML-23 (10);
Three Hammarlund R.F. choke coils, typ RFC-250 (5, 7, 18);
Two Silver-Marshall plug-in long-wave coils type 111-E (1, 6) and
Two Silver-Marshall coil sockets, type 515
One Silver-Marshall illuminated drum dial type 810-L (9), with 2½-volt dial ligh (9A);
One Silver-Marshall midget condenser, typ 342 B (12);

Four Eby sockets, UY-type (38);
Two Eby insulated binding posts (31, 32);
Two Thordarson choke units, type R-196 (21, 27);
One Thordarson autoformer, type R-190 (22);
One Thordarson power-supply transformer, type R-280 (34);
One Thordarson filament transformer, type T-3660 (36;
One Electrad "Royalty" variable grid leak, potentiometer type O (24);
One Electrad "Truvolt" resistor, type C 130 S (33);
Two Flechtheim midget fixed condensers, .00025-mf., type M-C, and two .0001-mf., type M-A, to give two .00035-mf. capacities (2, 11);
Two Flechtheim midget condensers, .0001-mf., type M-A (19, 19A);
Four Amperites, No. 227, with mountings (39, 40, 41, 42);
Four Durham "Powerohm" metallized resistors, with mountings: three 2,000-ohm (4, 14, 25) and one 50,000-ohm (16);
One Electrad power switch (37);
Four Flechtheim bypass condensers: two 0.5-mf., type B-50 (3, 3); and two 1-mf., type B-100 (15, 20);
One Flechtheim midget coupling condenser, .01-mf., type M-K (23);
One Flechtheim filter condenser, 4-mf., type F401 (28);
One Flechtheim condenser block, type F14 (35—used as 2-2-4-mf.);
One aluminum sheet 21 x 14 inches, cut as illustrated (Fig. 3) and bent for chassis;
One roll Corwico "Braidite" solid-core hook-up wire; and
One can Kester rosin-core radio solder.

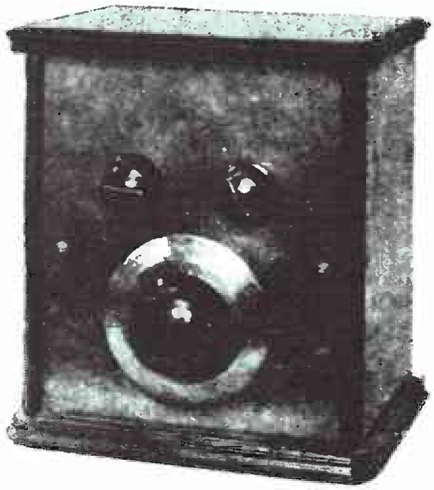

Fig. A. Completed appearance of the Audio Oscillator. The panel is metal (cut from a larger, discarded one); and the dial is also.

Service Man's A. F. Modulated R. F. Oscillator

THE service man often has need of a modulated radio-frequency oscillator or "driver," as these instruments are indispensable in the adjustment of certain types of radio-frequency amplifiers. Their principal uses are in compensating multi-stage ganged control receivers, in neutralizing, and for a great many other measurements that are made from time to time. If such an instrument is calibrated, its worth is further increased.

The instrument for the service man's use should be small in size, and completely contained, to obtain portability. It may be built to fit into any kind of a cabinet or case, which should be of ample size to accommodate also the battery supply. The '99-type tube, which requires 3.3 volts at 60 milliamperes for filament supply, is capable of sufficient power output for most purposes, and permits the use of the ordinary 4½-volt "C" battery for the filament; while two 22½-volt light "B" batteries serve for the plate supply.

Circuit Used

The circuit used is the modified Hartley type. The inductance L1 is tuned by the variable condenser C1, connected in series with a .00025-mf. fixed condenser (C2); the latter is shunted by a shorting switch SW1. When this is open the effective maximum capacity across the tuned half of the inductance L1 is approximately .00016-mf., if C1 is .0005-mf. When C2 is shorted by the switch, the maximum capacity will be that of C1 alone. This arrangement extends the minimum capacity range downward (which is especially useful on the shorter wavelengths) and also lengthens the calibration scale, making for greater accuracy in calibration.

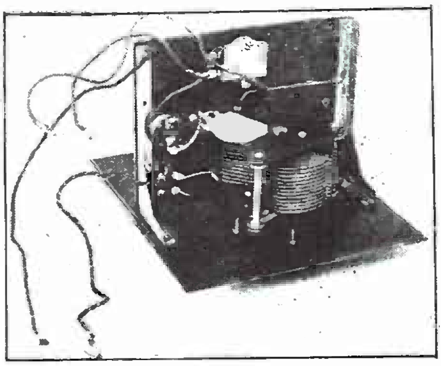

Fig. B. Parts placements under the subpanel.

How Modulated

There are a number of different types of modulated R.F. oscillators. Among the most common is that modulated by a separate audio oscillator, which has the disadvantage of requiring additional costly apparatus; while if the tone modulation is made variable, additional controls are required.

Another is arranged to operate directly from the 110-volt A.C. or D.C. light circuit. The modulating source is the same circuit; using the alternating frequency of the A.C. circuit or the commutator-frequency of the D.C. source. One fault with this method is that the modulated frequency cannot be varied, while another is the inherent broad tuning (apparently), caused by the radiation of power from the light circuit. Also, a tone frequency of 60 cycles is inconvenient for use in adjustment or measurement work of any precision.

The driver presented here tunes just as sharply as the more elaborate drivers used with greater power supply, without the additional apparatus necessary in such installations, and also possesses the portability of the line-circuit supply and modulated type. Its fault, of course, is in its battery operation, requiring replacement of these from time to time; but its superior qualities easily overcome this. Another great advantage is that the modulating tone may be varied over a very large scale by varying the grid-leak resistance R2.

It is well known that any regenerative receiver could be made to howl by increasing the feed-back, and that the tone of the howl could be varied or changed by changing the value of the grid leak. In such sets the range of the tone is limited by the small capacity of the grid condenser, which is never given a value of more than .00025-mf.; so small a capacity does not allow sufficient charge to accumulate on the grid of the tube, when it is desired to lower the pitch of the tone. By increasing the value of the condenser to .01-mf., in combination with the proper shunt-resistance value, the tone range may be extended downward; the tone frequency depends upon the value of resistance. The charge accumulating on the grid of the tube is prevented from quickly leaking off to the ground circuit by the grid resistance or "leak." The greater the resistance of the grid leak the longer the time required for the charge to leak off; the smaller the resistance, the shorter the time, and the higher the frequency.

Parts Required

The parts for the construction of this oscillator can be found in most any junk box. They need not be identical with those specified here, but should be of the same values. To prevent later difficulty or trouble in producing oscillations, the parts from the junk box should be given a thorough inspection and cleaning. They are as follows:

1 General Radio .0005-mf. (23-plate) variable condenser (C1).
1 set Aero short wave coils of plug-in type, with plug-in base to which is permanently attached a variable primary (L1 and L2).
2 lengths 2-inch Insuline tubing, 2½ inches long, for broadcast-band coils.
6 General Radio coil plugs to fit jacks of plug-in base.
1 metal panel (size dependent on size of cabinet or case used).
1 cabinet or case not smaller than 8 inches high, 7 inches wide by 5½ inches deep.
1 Carter filament switch used for short switch (SW1). (The filament is turned off by the filament rheostat.)
1 Carter Midget 30-ohm rheostat (R1).
1 Clarostat panel-type variable grid leak—¼ to 10 megohms (R2).
1 Pilot sub-panel type four-prong socket.
1 Flechtheim midget .01-mf. fixed condenser (C3).
1 Flechtheim midget .00025-mf. fixed condenser (C2).
1 Flechtheim midget .001-mf. fixed condenser (C4).
2 brackets (or brass strip for their construction).

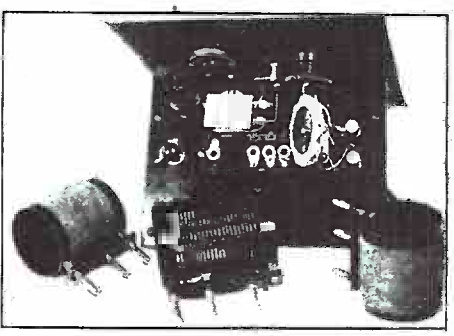

Fig. C. Parts placement above the subpanel.

- 1 sub-panel (size dependent upon length and depth of cabinet).
- 1 National vernier dial.
- 1 Cunningham CX399 tube (V1).
- 1 Bright Star or Burgess 4½ volt "C" battery.
- 2 Bright Star or Burgess portable type 22½ volt "B" batteries.

Construction

The panel and sub-panel are first prepared to size; metal is used for the former to prevent body capacity and, also, serve as the common "A+" return. Bakelite or hard rubber must be used for the sub-panel; the placement of the parts will depend on the size of the panel. In mounting the variable condenser, clearance must be allowed for the batteries in the back or beneath. The panel is drilled and all parts mounted, taking care that the variable grid leak R2 is insulated; as *otherwise a short will result* and no oscillations will occur. The sub-panel is then laid out and the parts mounted (see Figs. B and C). At this time the brackets should be fastened to the sub-panel; if the brackets are made from strip brass they should be bent to shape and fitted. After the complete assembly of the sub-panel, it is fastened to the metal front panel by brass machine screws. Binding posts for the pick-up coil may be placed on the panel or at any convenient point on the sides of the cabinet. If desired, the leads need not be extended for the terminals on the short-wave coil mounting as already provided, may be used as illustrated (Fig. C). With the exception of the leads for the connection to the batteries, the wiring should be of bus-bar; for after calibrating any change in position of the wiring would destroy the accuracy.

Coil Construction

As the short-wave coils and mounting are already on hand, no data will be given for their construction. It will be necessary for the constructor to make two coils to cover the range from 100 to 600 meters; the smaller is wound with 46 turns of No. 22 D.C.C. wire on a 2-inch tube, with a tap at the 23rd turn for the filament return. The large coil is wound with 100 turns of No. 28 D.C.C. with a tap at the 60th turn; this section of the coil should be shunted by the variable condenser and is in the grid circuit. The coils are now provided with the same mounting arrangement to fit the plug-in base, as found on the short-wave coils.

Calibration

If the constructor does not possess a wavemeter, the calibration will be a little more difficult. However, broadcast stations are narrowly separated over the entire band, and their frequencies are maintained at greater accuracy than will be possible to insure with this device (because of the changes in filament and plate supply). Before proceeding with the calibration, a milliammeter should be inserted in the filament circuit and the filament current adjusted by means of the rheostat for 60 milliamperes; at the same time the voltage should be measured. These values should be noted and the position of the rheostat marked; the mark, however, will serve as the check point only as long as the filament current is maintained within 10% of the original value.

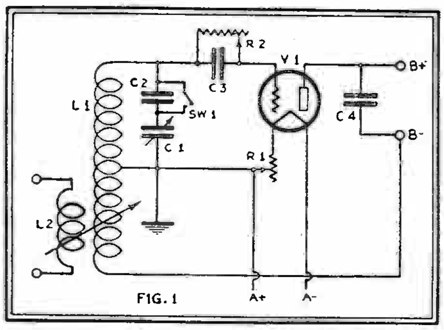

FIG. 1

Schematic circuit of the combined R.F. and A.F. oscillator described in this article.

Beginning at either end of the broadcast band, stations are tuned in on any broadcast receiver. The grid leak is adjusted to the desired tone, and the rheostat set on the mark as already described. The dial of the driver is now rotated until it peaks and a clear loud note is heard in the speaker or phones attached to the set. If it is difficult to obtain a sharp peak on the adjustment of the driver dial, the driver should be moved farther away. For each successive station checked, a notation should be made. After all calibration points have been marked, the frequencies of the broadcast stations should be entered opposite them in a log for future reference. The short-wave coils are calibrated in the same manner; although it will be difficult to secure complete band calibration unless one is able to receive the Bureau of Standards' *standard-frequency transmissions*, which are exact.

An Excellent Output Meter

AN output meter which I greatly favor over the vacuum-tube voltmeter is made by the use of an output transformer, a 15-ohm potentiometer, one double-pole double-throw switch, and a Weston "Model 425" thermogalvanometer. The device can be built into a very small case; it requires no batteries, or power supply.

The output of the radio set is connected to the high-impedance, or primary winding of an output transformer. The low-impedance secondary winding is connected to the thermogalvanometer, through the 15-ohm potentiometer, which regulates the current.

Many radio receivers have built-in output transformers, the loud speaker having none. The D.P.D.T. switch is placed in the circuit, preceding the potentiometer; so that the meter and resistance can be switched to the output of this type of receiver.

A decided improvement can be made by inserting another double-pole, double-throw switch, preceding the output transformer, so that one can switch from output meter to loud speaker, whenever desired.

When the output meter is used on a chassis not incorporating an output transformer with a low-impedance secondary, (the transformer being contained in the reproducer), the terminals 3 and 4 are directly connected to the output of that receiver. If the receiver under test contains its output transformer, then the output is connected to terminals 1 and 2. The reason is that the low-impedance winding of the output coil will not match the high impedance of the primary of the output transformer in the meter box. When the receiver is connected, a deflection will occur on the meter, proportional to the amount of current flowing. For comparing the output of one receiver with another, the potentiometer should be adjusted so that the meter will read a maximum current flow at one-half scale.

This thermogalvanometer is an A.C. meter and can not be used on D.C.; costs more than a V.T. voltmeter, but I like it better, and believe it more satisfactory.

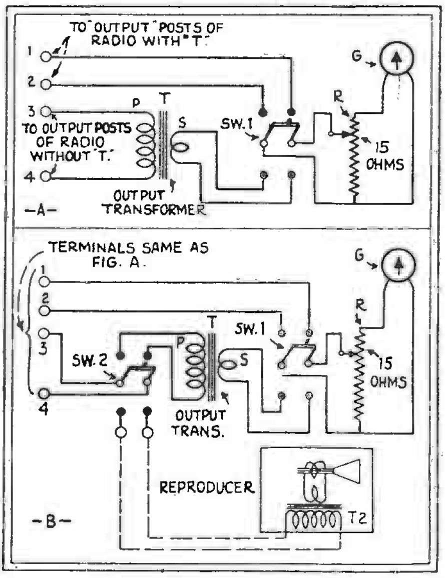

Fig. 3

Instead of a vacuum tube and milliammeter a thermogalvanometer, which reads very low A.C. currents, is here used to measure the output of a receiver.

A TEST LAMP

TROUBLE shooting is made easier by the use of a miniature lamp and socket and a few feet of twisted wire, the ends of which are made into loops and soldered. These eyelets may be slipped over the filament prongs of the '80, or other tube of suitable voltage, and current to light the lamp is thus obtained. This trouble lamp, being so small, can be dropped down into places inaccessible to an ordinary flashlight.

How To Make a Service Oscillator

The Service Man often asks for details on a factory job. Here it is!

ALTHOUGH service oscillators have been described in many radio publications, most of these have been integral parts of rather extensive test sets; whereas many Service Men already have set analyzers and what not and desire information on a separate oscillator.

This oscillator, pictured in Figs. A and B, and covering a frequency range of 500 to 1500 kc. (200 to 600 meters), is compact and complete in itself. As shown in the diagram, Fig. 1, it may be operated from either an A.C. light line, or batteries; and any tube except the screen-grid type may be used.

Condenser and Coil

The variable condenser is of .00035-mf. capacity, with a straight-line-frequency characteristic. It is desirable to use a condenser of this type, so that the number of kilocycles per scale division is equal over the entire scale, making more accurate and easier tuning possible.

The inductance consists of 60 turns of No. 24 B. & S. double-cotton-covered copper wire wound on a bakelite form three inches in diameter. A tap is brought out at the mid-point and the coil is painted with either shellac or collodion to hold the windings in place.

The coupling coil, consisting of two or three turns, is wound over the inductance. A lead from one end is brought out to the coupling binding post and the other end is left free.

Choice of Milliammeter

To obtain an 0-50 milliampere reading with the 0-10 milliammeter, an external shunt is used. The 0-50 reading is necessary because some tubes draw plate current in this range. The shunt serves also to protect the meter against overloads.

The resistance of the external shunt depends upon the type of meter used. With a Weston "Model 506" milliammeter (0-10-ma. scale) the resistance of the meter is 3.2 ohms. Thus to obtain a reading of five times ten milliamperes, or 50 milliamperes, it is necessary to use an external shunt of 0.8 ohms; since the current divides between the shunt and the meter in inverse ratio to their resistances. The push-button switch is normally closed, placing the shunt in the circuit. By pushing the button the shunt is removed, giving the normal 0-10 milliampere reading.

Current Supply

The oscillator is built so that either the 110-volt A.C. house supply or "B" batteries, which are mounted in the case, can be used for the plate supply. The "B" batteries are two small 22½-volt units connected in series. A D.P.D.T. switch is connected as shown, to change from one source of supply to the other. This switch is so arranged that it is impossible to place both alternating and direct current on the plate at the same time.

The filaments or heaters may be excited from either alternating or direct current. The changeover is made by a second D.P.-D.T. switch connected as shown. This switch also is interlocked, as is the plate supply switch, preventing the application of both alternating and direct current to the filaments at the same time.

When direct current from batteries is to be used, they are connected to the binding posts marked "External Filament Supply." The alternating current is supplied by a Thordarson "Type 2445" filament transformer. This transformer has three windings of 1.5, 2.5, and 5.0 volts, with mid-taps on the 2.5 and 5.0 volt windings. To supply all types of tubes it is necessary to have the following voltages: 1.1, 1.5, 2.5, 3.3, 5.0, and 7.5. The 1.5, 2.5, and 5.0 volt values are obtained directly from the low-voltage windings. The supply for 1.1-volt tubes is obtained by taking leads from one side and the mid-tap of the 2.5-volt windings. The supply for the 3.3-volt tubes is obtained by connecting the 1.5-volt winding and the 5.0-volt winding so that their voltages are subtractive; as shown in the diagram of transformer connections, Fig. 3. For 7.5-volt tubes, the supply is obtained by connecting the 5.0-volt winding and the 2.5-volt winding in series so that their voltages are additive. All of these connections are shown in Fig. 3, and obtained by means of the tandem 6-point switch.

Parts Required

The following list gives the make and type of equipment used in the test set as constructed. Other materials can be substituted but care should be taken to observe the necessary requirements.

One .00035-mf. National variable condenser, and vernier dial;
One 10½ x 9½-in. bakelite panel;
One 0-10 "Model 506" D.C. Weston milliammeter;
One .02-mf. Tobe fixed condenser;
One 1-mf. Tobe fixed condenser;

Fig. A

Here is the external appearance of the service oscillator, built as a professional job with engraved panel. Everything is controlled conveniently. The lid is two inches deep inside.

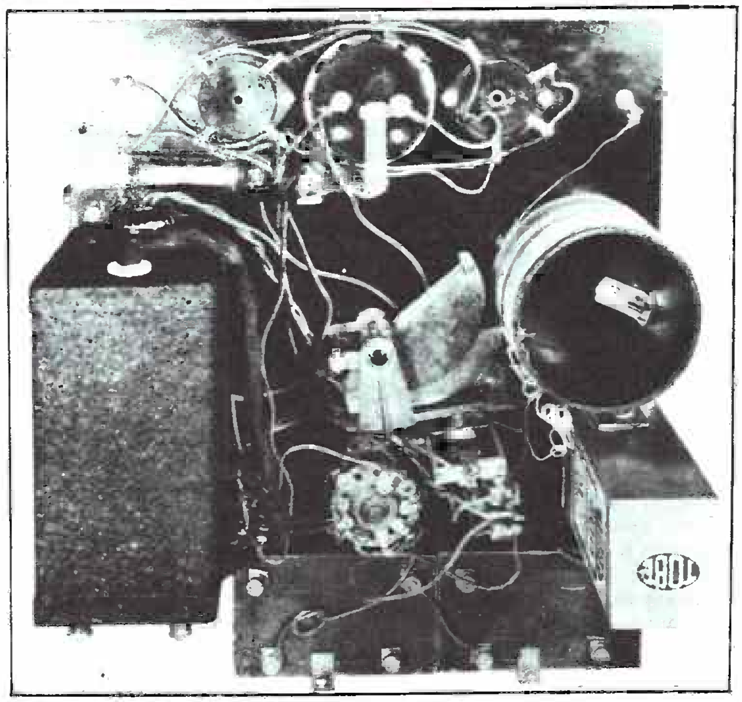

Fig. B

The oscillator is simple enough. Batteries, and a power transformer, with a selector switch, give the choice of any desired voltage.

One "Type 2445" Thordarson filament transformer;
Two 6-point Yaxley tap switches in tandem;
One 100,000-ohm grid leak and mounting;
One 3-inch coil form and 40 ft. No. 24 B. & S. d.c.c. copper wire;
Two Eby standard sockets, one UX and one UY;
One single-pole push-button switch;
Three Eby binding posts;
Two Yaxley double-pole double-throw switches;
Two Eveready No. 768 "B" batteries.

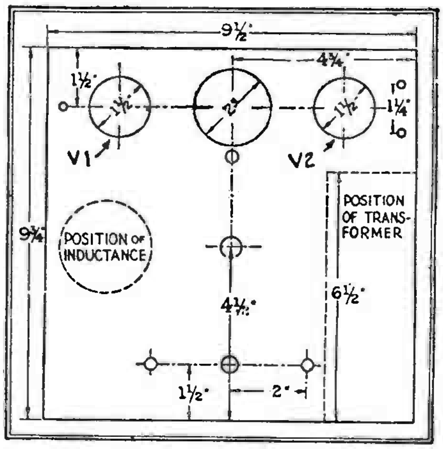

Fig. 2

The panel layout of the service oscillator is given above. Compare it with Fig. A.

Fig. 1 shows the circuit diagram of the oscillator; Fig. 2 and Fig. A the panel arrangement of the apparatus. Fig. B shows the interior of the completed oscillator. It will be noted that the set is extremely compact, yet al' parts are readily accessible.

When it is impossible to obtain an outside signal, the oscillator will supply a signal of any desired frequency in the broadcast band (500-1500 kilocycles) for testing a set. It may be used also as a wavemeter, in adjusting compensating condensers, in trying out tubes, and in testing sets for selectivity. As one becomes adept in its use it will be found to have much application for trouble shooting.

Fig. 1 (right)

The connections of the oscillator; the switch Sw2 selects battery or alternating voltages for the tube filament, while Sw1 selects similarly for the plate voltage.

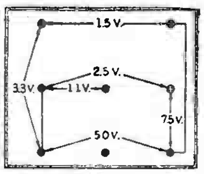

Fig. 3 (above)

The connections across the secondary windings, to give any desired A.C. filament voltage (as selected by the twin switch Sw3) are as indicated.

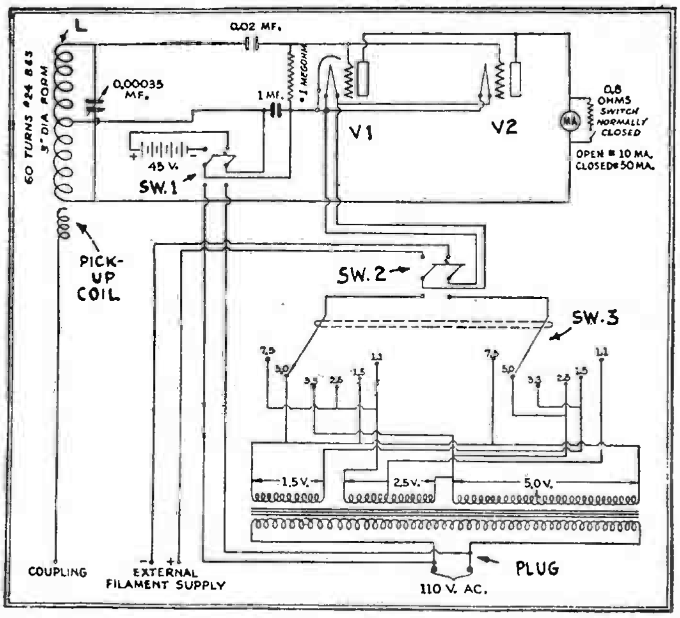

◆

A Simple Tube Tester

FOR the Service Man who cannot afford much for his testing equipment—and I think there are quite a few of us—I think this simple and very effective tube tester will be of considerable interest. It combines ideas from many sources with a few original ones; and with proper use, will justify its trifling cost—a very few dollars. The meters may be incorporated into the tester or, if the Service Man has instruments of the same type, he may use open-circuit jacks where the meters are indicated, and employ his own.

This circuit will test screen-grid tubes, by using the flexible cap lead for grid connection. The D.P.D.T. switch Sw does away with any need for two extra sockets; thus reducing cost and increasing the simplicity. The tester may be mounted in any form that pleases the builder and, since all of us have our own ideas in this regard, I hesitate to suggest any specific mounting.

The tube to be tested is inserted in the proper socket, the resistance R4 being turned completely into circuit with the filament; Sw is set in position 2, and Sw1 is turned on. R4 is then turned until the tube receives the proper voltage, as read on the 0-15-volt meter V. The first reading is then taken on the 0-25-scale milliammeter MA.

Then press the push-button K, and take the second reading; compare with the table reproduced here. (With low-priced, low-resistance meters, it would be well for the builder to prepare his own chart; using tubes of known rating.—*Editor.*)

For screen-grid tubes, switch Sw is set at position 1; and the cap of the flexible lead is connected to the cap of the tube being tested.

The parts purchased by me for the tester were as follows:

One 7½-volt, 2-amp., filament transformer, T ($1.25);
Three Electrad "Type B" resistors: R1, 400 ohms; R2, 1000 ohms; R3, 2250 ohms ($1.50);
One Centralab 250-ohm power rheostat, R4, type "PR250" (75c);
Two sockets, UX and UY type (50c),
One D.P.D.T. switch Sw (25c);
One line switch Sw1, on-off type, 110-volt (25c);
One push-button K (15c);
One "Readrite" 0-15-volt A.C. voltmeter V ($1.50);
One Readrite 0-25-ma. D.C. milliammeter A, (85c).

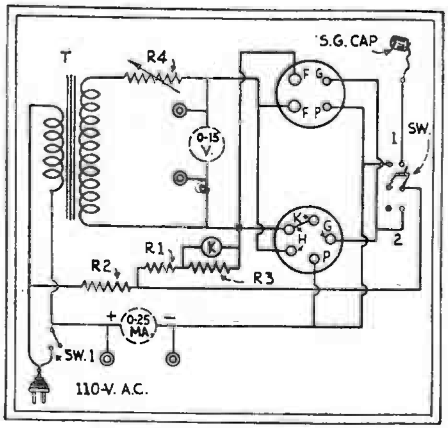

Fig. 2

An inexpensive home-built tube checker which will serve many purposes of the Service Man.

The prices quoted (total $7.00) are those for which the parts were picked up around New York City. I am sure that this idea will come pleasantly to Service Men who have been called upon to test tubes, but lacked apparatus.

Tube Chart

	Volts	Milliamperes	
Type	Filament	K Open	K Closed
'11–'12	1.1	1–1.5	2–2.5
'26	1.5	1.5	4
'45	2.5	3	11
'24	2.5	1	2.5
'27	2.5	1.5–2	3–5.5
'99	3.3	1.5	3
'20	3.3	2.5–3	5.5–6
'22	3.3	2	4–6
'01A	5.0	1.7	4.5–5
'12A	5.0	2	6.5–7
'12	5.0	2	4–6
'40	5.0	.7	1.7
'71 '71A	5.0	3.5–4	12–13
'00A	5.0	1.5	3.5
'10	7.5	2	6
'50	7.5	3	10.5

I have not data on the new two-volt tubes; but those who come in contact with them, or other special types, can quickly determine with the aid of a few good tubes the proper readings.

Construction of Oscillators

How old transmitting apparatus may be rearranged by the "ham," or the same principles utilized by the Service Man

AMATEUR operators may come and go, but the oscillators they build are usually good enough to go on, with slight modifications, for servicing. Low-power tube transmitters can easily be revamped for servicing, thus saving time and usually considerable expense. Not only do most transmitters supply sufficient power for the ordinary run of tests, but they can be used for many purposes requiring more power. It is usually not difficult to locate one at a reasonable price.

Take, for example, the circuit of Fig. 1. It is not the last word in transmitting arrangements as used today, but it is easily modernized. It is provided with two clips, or tap switches, and some tapped turns at the end of the inductance for the counterpoise.

Rearrangement of Circuit

By a few simple changes, Fig. 2 results. Since most sets of this type were designed for 150-200 meters, or higher, it is possible in some cases to adapt them for operation in the broadcast spectrum with little change. Later sets require a different coil; others only a few extra turns in the inductance. The antenna and counterpoise leads are disconnected, and one tap switch is connected to the condenser C1 (for rough-frequency adjustment), the other being connected to the filament center-tap lead. This is a very convenient feature for adjusting the grid excitation and, to some extent, the output and wave-form. A plate blocking condenser (C3) must be added; this should be of proper rating to withstand the plate voltage used. Three additional binding posts are placed on the panel for current or voltage feed to the circuit under test, as indicated in Fig. 2.

A small R.F. choke, consisting of three or four hundred turns of fine wire on a cotton spool, connected in series with a 5000-ohm grid leak and a 0-25-scale D.C. milliammeter MA1, provides a sensitive resonance indicator. This meter can be mounted in the hole left by the antenna ammeter, which is removed. A plate milliammeter MA2 of lower reading is often necessary.

The outfit described was a telephone transmitter, as may be seen from the diagrams. The modulator can be left as it was, usually; the set can then be used as a modulated oscillator. Various known frequencies can be employed for modulation, if desired; a buzzer can be used for some purposes. In a simple oscillator, a plate supply with a little ripple in it is usually sufficient for other purposes.

The above remarks apply to any of the usual amateur transmitters. The procedure described would also be followed by the amateur in adapting a transmitter for modern practice, as far as the circuit is concerned.

Simplified Circuits

The short-wave sets can often be revamped, with somewhat less difficulty, for servicing. Usually, it suffices to increase the values of the grid and plate-blocking condensers GC and C3, and the size of the inductance; although the choke may have to be changed. The later sets employ a large value of capacity in the oscillating circuit, so it may not be necessary to replace the tuning condenser C1. A set designed for short-wave use works especially well at lower frequencies, if proper constants are employed.

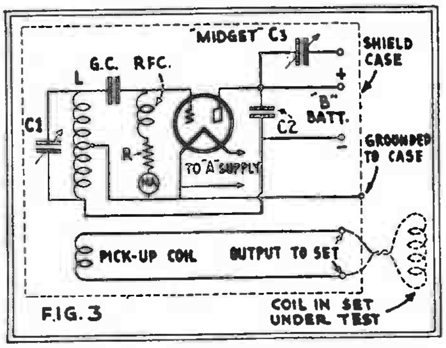

FIG. 3

This type of oscillator presents several advantages for the user. It must be shielded, as shown; the pick-up coil has external terminals for connection to a set.

Although much has been published on the general subject of oscillators, there is room for considerable improvement in outfits requiring a minimum of apparatus and having facilities for all kinds of tests. A useful oscillator is shown in Fig. 3; this has all the advantages of ordinary equipment, with some additional advantages. The sensitive gridmeter is at ground potential; a shielded case and a "B—" battery by-pass condenser C2 are also provided. It is also better to employ a small choke R.F.C. in series with the grid leak. Current or voltage feed is also provided. Circuit values are as usual for the broadcast band.

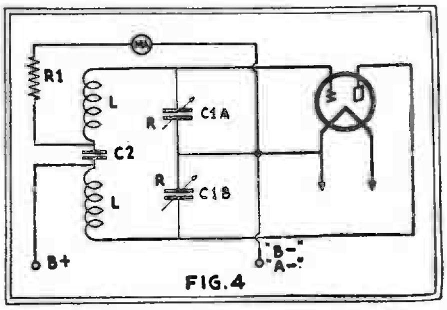

FIG. 4

This circuit, though it requires a special condenser unit, requires no grid condenser and avoids body-capacity effects: Its output is picked up just as in Fig. 3.

Every circuit has its own particular advantages. Fig. 4 requires no R. F. chokes; its gridmeter is at ground potential and no body effects will be noticed, since the condensers also are grounded. However, it requires a double-unit condenser C1A—C1B; which may be a disadvantage if one is not available. If plug-in coils L are to be used, four coil-connections are necessary. Both coils and both condensers are of the same values. Whether Fig. 3 or Fig. 4 is the more suitable depends upon the user and the parts available.

Since the meters are usually the most expensive parts, their number must be limited. Fig. 5 shows a convenient arrangement to provide versatility. A number of posts are provided on the panel, and shunts are used for the various tubes employed; each shunt R1, R2 has in series a push-pull switch Sw1, Sw2. When the meter is used externally for a vacuum-tube voltmeter, or in measuring

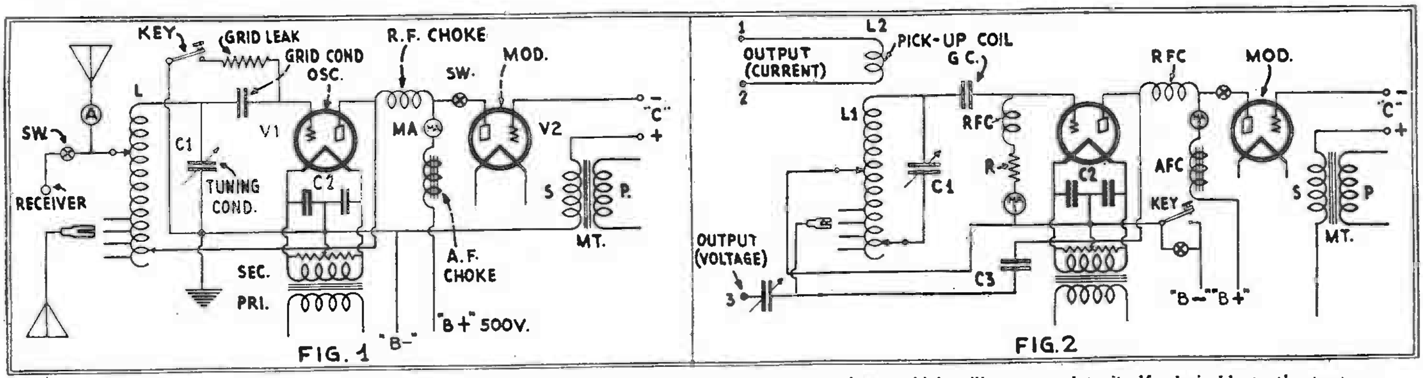

FIG. 1

FIG. 2

The circuit shown at the left introduces itself as a once-popular type of low-power transmitter, which will accommodate itself admirably to the purposes of the Service Man, who wants his own "broadcast station" for purposes of receiver testing and adjustment. As remodeled in Fig. 2, it will serve this purpose excellently.

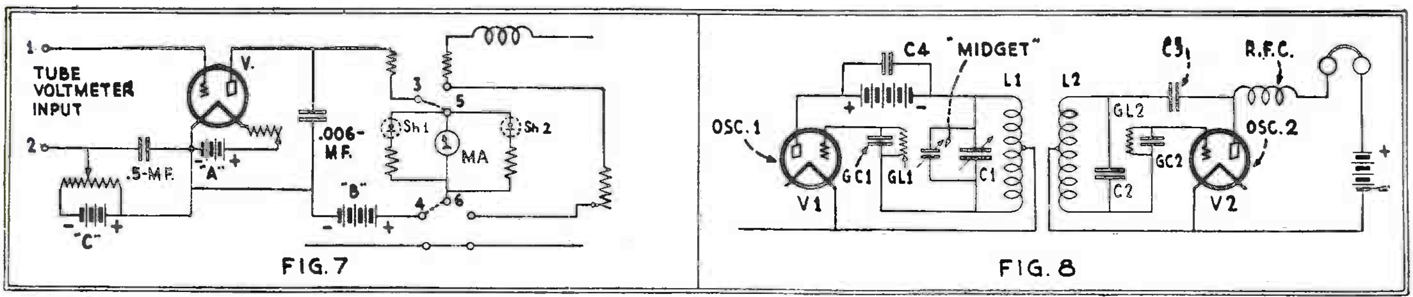

FIG.7 FIG.8

The vacuum-tube voltmeter shown at the left may readily be mounted in the same cabinet with the shop oscillator, and use the meter of the latter through the connection 3-5 and 4-6. At the right, the method of using two oscillators to provide an A.F. tone adjustable to any frequency.

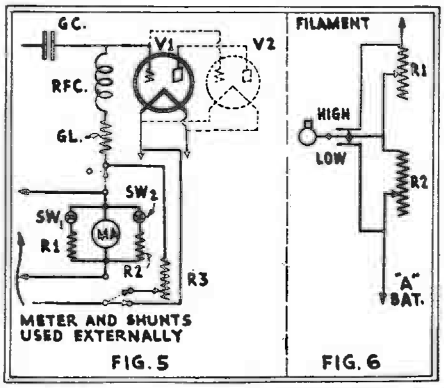

FIG.5 FIG.6

With a large output, it is desirable to provide button-controlled meter shunts, as shown at the left, which give a higher scale reading. The connections at the right adjust filament voltage for the tube in use.

plate currents, it has two ranges. This meter can be used externally, even though the oscillator is operating, by connecting to proper posts. By means of a variable resistor R3, it is possible, not only to provide an extra shunt, but to set the grid current at a definite value on the scale; which is convenient in some tests. The shunts R1, R2 consist of short lengths of resistance wire, adjusted to give 1/2, 1/3, etc. of full-scale, deflection when this current value is passing through the combination. A complete diagram of connections decided upon should be glued to the case of the set.

By using in the oscillator two paralleled sockets, power outputs up to 15 watts may be obtained with the proper tubes and voltages. Ordinary condenser spacing will allow oscillator plate voltages of about 350 volts in ordinary arrangements; for "hi-C" amateur transmitters, 1000 volts is usually specified. For such a wide selection of outputs, the shunting arrangement of Fig. 5 is necessary. Since the filament voltages and currents will vary with the different tubes used, the rheostat connections of Fig. 6 are necessary. Two rheostats R1, R2 are connected in series; and a switch is provided to short either one or the other. Both may be calibrated for the filament voltages to be used in this way; so that no filament voltmeter is necessary on the panel. One rheostat is of the carbon-pile type and the other of the power-tube variety.

Other Adaptations

The vacuum-tube voltmeter can be used for many purposes by the Service Man. Since it requires only limited space, it may be mounted in the same cabinet with the oscillator. A good size of meter to use for any of the circuits described is the 0-1½-milliampere scale. By providing two additional posts 5, 6 on the panel the meter can be used also for the tube voltmeter, as shown in Fig. 7.

The beat-frequency oscillator provides perhaps the simplest arrangement to obtain a good audio note over the entire audible range. One oscillator is fixed as to frequency; and the other is variable, as shown in Fig. 8. Although the audible beat can be picked up in an external circuit, if desired, one can listen in the plate circuit of either oscillator. The adjustable-oscillator tuning condenser C1 should be shunted by a small trimming (midget) condenser to give small changes in the beat-note. In some arrangements, a short extension handle on this condenser will be necessary for best results. The whole outfit should be mounted in a shield case, and proper posts provided for external connections. It can be used for many purposes at either radio or audio frequencies.

With his long experience with all kinds of circuits at long and short waves, an amateur makes an ideal Service Man. The fact that he owns a license is sufficient proof that he has unusual interest, often greater ability, and certainly more knowledge of radio regulations and practice. Some of the best performing broadcast receivers are found in amateurs' homes. Friends and neighbors call frequently on the amateur for repairs and advice; so experience with late sets is not lacking.

Long experience, with apparatus which is much more difficult to adjust, has made the average amateur careful of small details which others overlook. Realizing that certain factors must be sacrificed in factory-built sets in order to make them salable and, also, that such design limitations do not necessarily apply to a home-made set, the amateur set builder can build (on the side) broadcast sets with greater over-all gain and selectivity; by providing, for example, better coils and more distance between parts. Instead of a small set with coils covered over with cans, there is a spacious affair (but with plenty of room in the console), 'a la breadboard," to show the visiting radio friends. Few amateurs realize their servicing and set-building opportunities.

◆

A Duplex Test Prod

THIS device was made by the writer while set-testing in a factory, and proved itself to be practical, making voltage readings much less troublesome. Ordinarily two prods were used; one for bias voltages, and one for screen and plate voltages. By incorporating a switch in a suitable handle, these voltages may be taken with one prod.

The switch assembly consists of three phosphor-bronze springs mounted to a strip of brass, ⅜-inch wide and 2⅜ inches long, with a 6/32 machine-screw; they are insulated from one another and the screw with fiber washers. A hole is drilled in the brass plate to take a push-button as shown in the drawing. The button is turned on a lathe, or built up from a bakelite rod and a thick washer. The handle is hollowed out and the switch fastened to it with two small wood-screws. The hollowing may be done by roughing out with a large drill and finishing with a pocket knife. The center contact of the switch is connected by a short length of insulated wire, to a brass rod which is driven into the handle. One wire of a two-wire cable, about four feet in length, is soldered to the upper contact; the other end goes to the high-voltage post of the meter. The lower contact is connected by the other wire to the low-voltage side of the meter. A knot is tied in the cable, to prevent it from pulling out of the handle.

In practice, the upper and middle contacts are always in contact giving high voltages. By pressing the button, a low voltage reading is obtained. The negative terminal of the meter is connected to the chassis with a small clip.

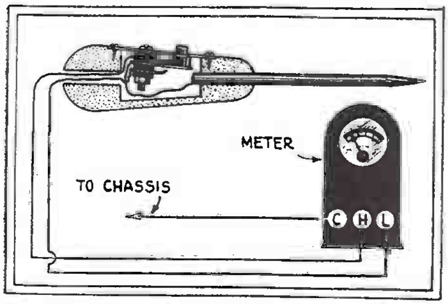

Fig. 1

With this prod, readings can be taken on either scale of a meter for quick testing work.

How To Make and Calibrate An I.F.—R.F. Oscillator

Because the service oscillator is of such vital importance in radio work, we are describing the construction of this much-needed device. The instrument has been built and calibrated without the use of external calibrated instruments other than an ordinary broadcast receiver.

VARIOUS commercial oscillators have been described in the pages of many books , but until now no complete constructional details of an oscillator that can be *built and calibrated* by the average Service-Man have been described. The oscillator described here was designed, built and calibrated so that *exact* data could be given in answer to the many requests from our readers.

To expedite servicing, the instrument was made as simple and compact as possible; a simple oscillating circuit was used employing a type '30 tube operated by dry cells. No attempt was made to design the instrument for line-voltage operation: the tube draws so little current that small-size batteries will run it for a long time. Furthermore, calibration is simplified and more accurate. Tip-jack connectors, mounted on the panel, (see accompanying photographs) provide ready means for measuring filament and plate voltages with an external voltmeter, so that a check on the condition of the batteries can be quickly made. Once calibrated with fresh batteries, it is important for maintaining accuracy that the voltages remain practically constant.

The fundamental oscillator circuit is designed to cover nearly all the I.F. frequencies used in commercial superheterodynes. The circuit is self-modulated at an audio frequency by means of a grid condenser and grid-leak of the proper values. This produces rich harmonics of higher frequencies that are used to cover the broadcast range as well as some of the higher intermediate frequencies.

The instrument is calibrated by comparing it with an accurately calibrated radio receiver. Any good receiver can be used, calibrated by tuning-in broadcast stations of known frequencies.

Construction of the Oscillator

The first procedure is to select the parts necessary for the complete instrument. While other makes of parts than those used in this oscillator may be employed it is recommended that *the parts specified should be as closely adhered to as possible.*

List of Parts

1—Blan, new type shield 10 x 6 x 5 inches deep;
1—National, .0005-mf. variable condenser, type EC;
1—National, precision dial, type M;
1—Clarostat, 3,000-ohm volume control, type P185;
1—Aerovox, .0005-mf. fixed condenser;
1—Durham, 1¼-megohm pig-tail grid leak;
1—Benjamin, four-prong cushion socket;
1—Filament switch;
4—Tip-jack connectors;
2—Eby binding posts;
2—Small Burgess 1½-volt dry cells, 4 x 1¾ inches;
1—Small Burgess 22½-volt "B" battery;
1—Type '30 vacuum tube;
1—15-ohm fixed resistor;
1—Bakelite tube 2 inches in dia., 4 inches long;
¼ lb. No. 30 D.C.C. magnet wire.

The aluminum shield box is of a new type with rugged corner posts that makes an excellent case for an instrument of this kind. Any of the sides can be quickly removed for replacing batteries or for other purposes. In the instrument illustrated, a bakelite-cloth covering was placed over the front panel for the sake of appearance. We recommend, however, that the panel be sprayed a dull black.

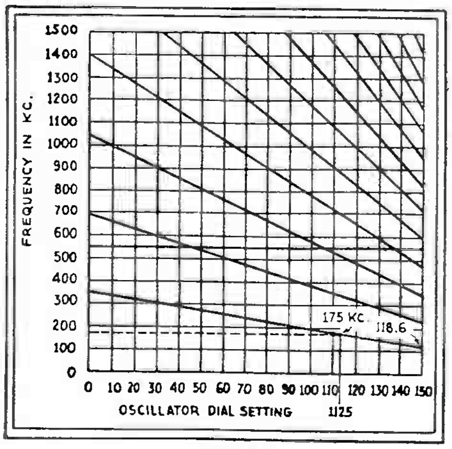

Fig. 5
Calibration curve of the oscillator. Each line is a harmonic of the one below it; in this manner both the I.F. and R.F. ranges are covered with one coil and one dial.

The tuning condenser is of the straight-line-frequency type; it proved its value when the oscillator was calibrated as the calibration curves obtained were virtually straight lines.

Construction of Coil

The coil used in this oscillator was purposely wound by hand so that it could be duplicated by anyone; otherwise the builder might be handicapped by difficulty in obtaining a commercial coil if such a coil were specified.

The coil was first calculated by using well-known inductance formulas so that the circuit would tune to approximately 100 kc. with the condenser set at maximum or .0005-mf. From these calculations the coil illustrated in Fig. 1 was made. It has approximately 400 turns of No. 30 D.C.C. wire (the exact number

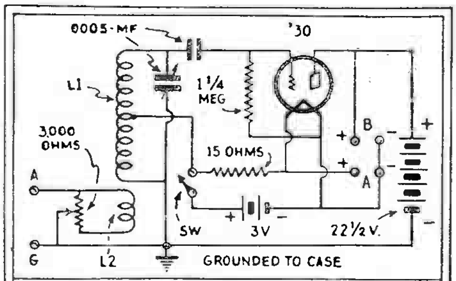

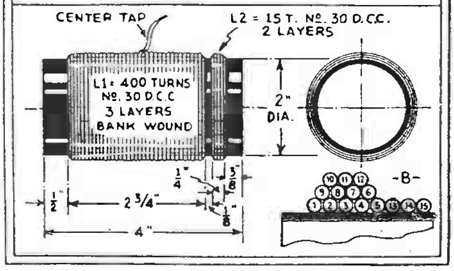

Fig. 3, above. Schematic circuit of this simple and efficient unit.
Fig. 1, below. Winding details of the coil used in the oscillator.

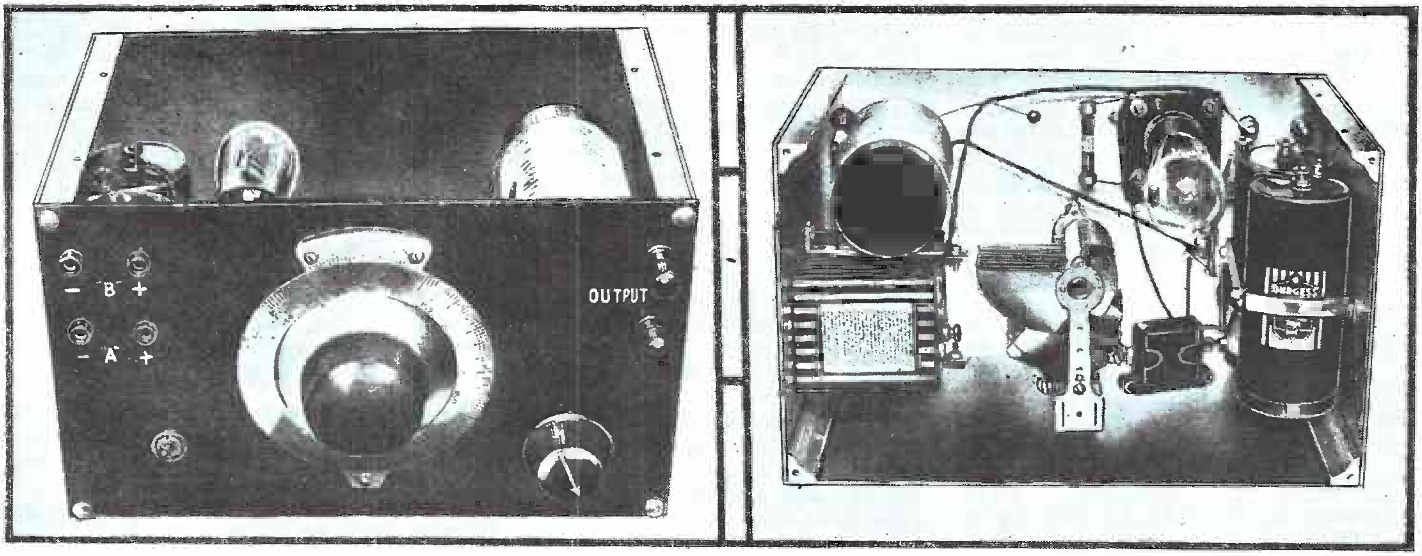

Left, the front and right, the internal view of the all-range oscillator. Its utter simplicity is only too apparent.

of turns is not important). The center tap was made at the approximate center of the winding after the coil was wound.

The wire was bank-wound in three layers. The manner of winding, which was found to be the simplest and best suited to this purpose, is illustrated in Fig. 1B. The turns are numbered in this sketch in the sequence in which they were wound; the process is continued in the same manner until the winding is complete.

The pick-up coil connected to the output posts consists of 15 turns of the same size wire. Both coils should be impregnated with boiling paraffine.

After the coil was finished and the circuit calibrated the lowest frequency which could be generated with the condenser set at maximum was 118.6 kc. Shielding, no doubt, caused the effect of a loss of inductance, which accounts for the higher frequency of the circuit than that on which the calculations were based. Since the lowest I.F. used in commercial supers is about 130 kc., the range covered by this instrument is ample and the coil was left as originally wound.

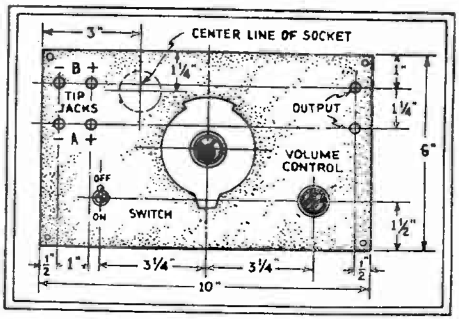

Fig. 2. Complete panel details.

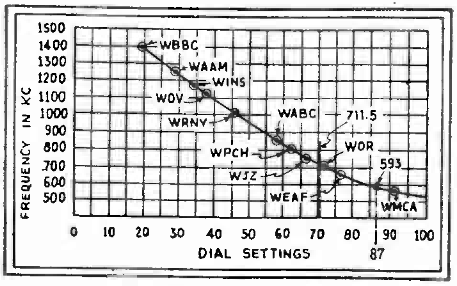

Fig. 4. Calibration curve of the broadcast receiver

Assembling the Apparatus

Figure 2 shows the drilling layout of the panel. The panel is 10 x 6 inches and the tuning condenser shaft passes directly through the center; templates for condenser and dial drilling are furnished with the instrument; the locations of the other parts are clearly indicated; the socket and the coil are mounted on the rear of the panel. The tip-jacks should be of the insulated type as they should not be in contact with the panel. One of the output posts is also insulated from the panel with bakelite washers; the other one is grounded.

The two dry cells are clamped to the left end of the case with standard brass angles and strips supplied by radio stores. The "B" battery is similarly clamped to the right end plate.

Figure 3 shows the complete wiring diagram. It will be noted that the negative terminal of the "B" battery is grounded to the case. The center terminal of the volume-control and the rotor plates of the condenser are also grounded. The values of the parts are clearly indicated on the diagram and agree with those called for in the list of parts. A study of the photographic illustrations will show more clearly how the apparatus is assembled.

Calibrating the Oscillator

By tuning-in various broadcast stations on a standard receiver of good design, accurate frequencies are available, especially from quartz crystal - controlled broadcast stations; these are used for calibrating the oscillator. The simplest procedure is to first plot an accurate calibration curve of the broadcast receiver. Such a curve is illustrated in Fig. 4. Frequency in kilocycles is plotted against tuning dial settings.

The next step is to disconnect the aerial from the broadcast receiver and connect the insulated output post of the oscillator to the aerial post of the receiver and connect the other post to the ground of the receiver. By switching on the oscillator, a series of harmonics may be heard by turning either the oscillator dial or the broadcast receiver dial. We are now prepared to make a very accurate set of calibration curves of the oscillator, after which the calibration can be further checked by heterodyning with crystal-controlled broadcast station waves.

The first step is to set the oscillator dial at its maximum or 150. Then tune in a harmonic of the oscillator at the highest dial setting heard on the broadcast receiver. Turn the volume-control of the oscillator until the harmonic signal is very weak and an accurate dial reading of the receiver is obtained. On this particular set a harmonic was heard at 87 on the receiver dial. This indicated, from Fig. 4, a frequency of 593 kc.

Now slowly decrease the tuning dial settings of the broadcast receiver (leaving the oscillator setting as it was) until another harmonic is heard. In this case one was heard at 70 on the receiver dial and from Fig. 4 indicated a frequency of 711.5 kc. The former figure subtracted from the latter, or 711.5 minus 593, equals 118.5. *This is the fundamental frequency of the oscillator because each harmonic differs from adjacent ones by an amount equal to the fundamental.*

We can check the accuracy by dividing 593 by 118.5, which gives 5 and a slight amount over indicating that our readings were not exact. Evidently we were working on the 5th and 6th harmonics. Dividing 593 by 5 gives 118.6 as the fundamental. Six times 118.6 would give a frequency of 711.6 for the 6th harmonic instead of 711.5, which was obtained from the curve.

Knowing that the fundamental frequency is 118.6 at the 150 degree setting of the oscillator dial, we can mark off on the calibration chart (Fig. 5) harmonics up to the 12th, spaced 118.6 kc. apart.

The same procedure can be carried out at the zero setting of the oscillator dial. In this case the frequencies worked out accurately at the first trial. A harmonic was tuned in at 72 on the tuner dial, indicating a frequency of 700 kc., and at 43, indicating a frequency of 1050. The difference, 350 kc., is the fundamental frequency of the oscillator at this setting. The second, third and fourth harmonics are marked on the graph of Fig. 5. This procedure was carried out at every 10 degree setting of the oscillator dial. A series of curves, as shown on the chart of Fig. 5 were plotted. It was found that the curves were actually straight lines, due to the straight-line-frequency characteristic of the oscillator condenser.

If one desires very accurate readings, an output meter may be connected to the radio receiver so that a visual indication, rather than an audible one, may be had. A suitable output meter is described on page 101 of this issue.

To make an accurate check of the calibration curves of the oscillator, one of the side plates should be removed and a piece of wire connected across the grid condenser so as to short-circuit it. Then the side plate should be replaced. In this condition the oscillator will generate a non-modulated wave which can be used to heterodyne the wave of a crystal-controlled broadcast station tuned in on the receiver. When making this test a short indoor aerial, just sufficient to pick up the broadcast station, should be connected to the aerial post of the receiver. The oscillator is left connected to the receiver. By tuning-in a station, such as WOR at 710 kc., the oscillator should cause a heterodyne squeal at 73, 112½, and 135½ (dial settings of the oscillator) working on the third, fourth and fifth harmonics respectively. Tune the oscillator dial for zero-beat adjustment and the calibration will be exact. Several stations may be tuned-in in this manner and slight corrections can then be made to the previous plotted curves if necessary, after which the short-circuiting wire in the grid condenser may be removed.

AN A.C.-OPERATED SERVICE OSCILLATOR

NO doubt, every radio experimenter and Service Man has many times wished for a small portable generator of signals of various frequencies, either modulated or unmodulated. I have constructed one which is exceptionally compact, obtains its power supply by simply plugging into the light socket, and covers a wide range of frequencies with three plug-in coils. It comprises a '27 tube used as an oscillator, in the conventional tuned-grid circuit, and an '01A tube with grid and plate tied together as rectifier.

One 30-henry choke is used in the filter circuit, which is conventional; the voltage divider is a 50,000-ohm potentiometer, with the plate of the '27 connected to the slider, so that a variable voltage is provided for the plate of the oscillator. The filament supply of the two tubes is from a transformer, and the plate voltage is taken direct from the 110-volt A.C. line; as this supplies voltage high enough for the purpose after it is rectified. Tip jacks are provided in the grid-return circuit, so that a meter may be plugged in to be used in lining up gang condensers or testing the resonance of circuits. A small variable condenser is provided, with one side connected to the grid and the other to a tip jack; so that the oscillator is easily coupled to other circuits.

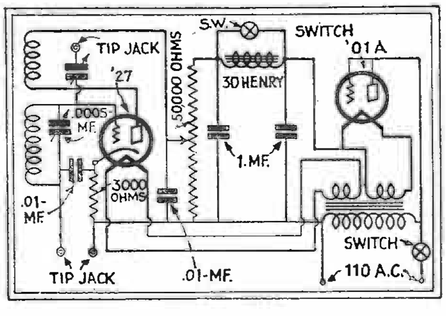

This oscillator is very handy for lining up gang condensers and neutralizing sets; I have used it as the oscillator in a superhet. An ordinary set can be converted to a super by connecting the grid of the first tube to an external tuned circuit coupled to the oscillator. Although a very slight A.C. ripple remains in the voltage supply of the oscillator, when the signal of the oscillator is tuned in on a sensitive receiver it appears about the same as the A.C. hum in ordinary receivers.

In order to modulate the signal sufficiently, so that it may be heard distinctly, a switch is connected across the 30-henry choke. When closed, this modulates the signal with the 60-cycle hum which is very distinct. The schematic diagram shows all details.

However, when I looked for a filament transformer I was unable to find one small enough; so I constructed one. I used the core iron from a 30-henry choke, and also the form on which the wire was wound; on this I wound 1200 turns of No. 28 enameled wire for the primary. Over this were 28 turns of No. 18 D.C.C. wire for the 2½-volt secondary, and over this 55 turns of No. 20 D.C.C. wire for the 5-volt secondary. Although this transformer becomes warm when in operation, I have operated several hours without undue heating.

To illustrate the compactness of this oscillator, the panel is 7 inches wide by 9 inches long, and the entire apparatus underneath the panel is housed in a wooden box the size of the panel and 3½ inches deep. The broadcast coil covers from 530 to 1700 kilocycles. The other two coils I have not had time to calibrate as yet but they reach as far as the shortest wavelength stations I have been able to get.

A "CROSLEY V" OSCILLATOR

ALTHOUGH thousands of 2-tube "Crosley V's" were sold, how many service men have realized how easy it is to make one into an excellent oscillator for circuit balancing, etc., by a slight change in the wiring? The circuit for this purpose is shown in Fig. 1.

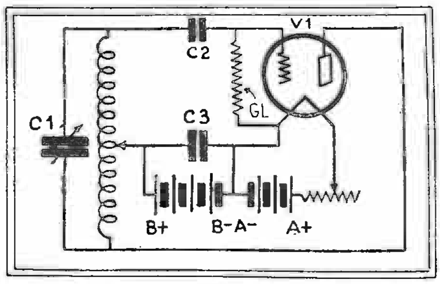

Fig. 1

The old regenerative sets, now junked, supply exactly the parts required for an R.F. oscillator.

A Hartley-type oscillator was decided upon, using a type '99 tube for V1. Condenser C1 is the regular "book-type" unit in the receiver; C2 the regular .00025-mf. condenser in shunt with grid leak GL; C3 a 0.5-mf. condenser; the rheostat 30 to 50 ohms. A 4½-volt "A" battery and a 45-volt "B" battery were used.

Audio-frequency modulation may be obtained by using a variable high resistor for GL, and adjusting it to the proper value.

THOROUGH TEST METHODS

THE writer has run into all kinds of troubles in radio receivers, and I find that none of them are hard to locate if the mechanic really knows what he is doing. Stating it mildly, there are very few parts in a set that are not more or less duplicates of some other part; or, putting it more plainly, there are three important parts or sections in a complete receiver, *i.e.*, R.F. circuit, detector, and A.F. circuit. The proper use of a combination R.F. and A.F. oscillator will tell the tale to a good mechanic in a very short time; and without this instrument we are totally in the dark.

My test on any receiver goes something like this. In the customer's home I use one of the medium-priced set testers (Readrite No.9) to test the tubes and all circuits electrically. If there is an open- or short-circuit it shows up at once and if it is in the external wiring of a part I repair it then and there. So my outfit for service consists of the tester mentioned, a set of phones with output transformer for testing the output—if any—and tubes, etc., for replacement. If the trouble is oscillations or low volume I take the set to the shop and give it a thorough test under all kinds of conditions. In other words, I duplicate the parts; I put a test R.F. amplifier on the detector; next I cut out the detector and substitute it and the same with the audio. Once the location is found (*i.e.*, what part of the circuit is wrong) it is, as I explained, very easy to remedy.

I find that most of the trouble in the wiring is due to the failure of the assembler to adhere to the first law of wiring; *e.g.*, *all joints to be electrically and mechanically secure without solder.*

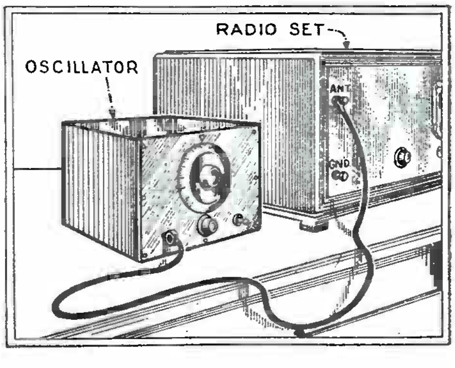

With some receivers, an oscillator must be coupled directly to the circuit, as shown. It is sometimes possible to obtain a sufficient signal, for balancing and testing, by inductive pick-up.

A Compact Ohm and Output Meter

THE ohm- and output meter described in this article is primarily meant for the Service Man who owns a good set tester and yet wants the improved features of the later types that he may not be able to afford at present.

The ohm- and output meter illustrated is a combination of instruments used to indicate resistance and A.C. output voltage on the same meter. This is accomplished by means of a copper-oxide rectifier and a 3-pole, 6-throw switch. This meter can be built at a nominal cost as all parts are standard and are easily obtained.

Some practical uses for this instrument are as follows: As an ohmmeter, it has three convenient ranges: 0-1,000, 0-10,000 and 0-100,000 ohms, and is used to find unknown values of resistors; for continuity testing; checking balanced conditions of tapped transformers; opens; shorts, etc.

The output-meter has three ranges as follows: 0-1, 0-10 and 0-100 volts A.C. It is used in conjunction with oscillators for aligning condensers and I.F. coils, for locating hum, level indicators, etc.

The parts used for the ohmmeter are a 100-ma. shunt for the 0-1,000-ohm range; (this range should be used as little as possible as the drain is quite heavy); a 10-ma. shunt for the 0-10,000-ohm range; and a 4,000-ohm resistor for the 100,000-ohm range.

By clever use of the 3-pole 6-throw switch the 1,000-ohm variable resistor is used to compensate for high or low battery variations on all ohmmeter ranges.

On the 0-1,000-ohm range, with the switch in position, a 50-ohm fixed-resistor is automatically placed in parallel with the 1,000-ohm variable resistor, serving a two-fold purpose—it will bypass current from the variable resistor as well as change its range to less than 50 ohms.

This low range is required to get full-scale deflection with a 4½-volt battery. With the switch in position for 0-10,000 ohms, only the 1,000-ohm variable resistor is in series with the meter. In this manner 450 ohms is obtained for full-scale deflection with 4½ volts applied. With the switch in position for 0-100,000 ohms, the 4,000-ohm resistor is automatically placed in series with the 1,000 ohm variable resistor thus obtaining 4,500 ohms for full-scale deflection with the 4½-volt battery.

All resistance readings are in multiples of 10. The scale on the meter is calibrated to 100,000 ohms. All that is necessary when using the 10,000-ohm scale is to leave one cipher off the indicated figures on the 100,000-ohm scale, i.e., when the reading of the scale shows 1,000 ohms, leaving a cipher off the end figure, gives us a value of 100 ohms. On the 1,000-ohm scale, two ciphers are left off for obtaining correct values.

For the output-meter ranges great care must be exercised in connecting the rectifier. The polarity must be correct and the D.C. side of the rectifier must go to the meter, otherwise—"it is just too bad."

The resistance of the rectifier at full-scale deflection of 1 ma. is about 460 ohms; therefore, a 500-ohm resistor is placed in series with the rectifier to get a 1-volt A.C. reading; on the 10-volt scale a 10,000 ohm resistor is connected in series and on the 100-volt range 100,000 ohms is used.

The Parts

Standard stock-type resistors of good makes may be used. The 1,000 ohm variable resistor will compensate for resistance error and also for high and low battery voltage. The A.C. voltages are only approximate. If greater accuracy is required, precision-type resistors are recommended. By the use of a switch with more poles, additional voltage ranges can be added.

The ohm- and output meter can be built in a small compact unit with self-contained battery as shown in the photographs. There are only a few wires and they can be neatly arranged. Heavy spaghetti covered bus-bar is recommended in connecting the shunts as fine wire has a high resistance and will introduce errors in the readings.

The entire unit can be mounted in a box 4½ x 6¼ inches; the depth of the box is dependent on whether the builder desires to have the battery in or out of the box. If the battery is not wanted in the box it must be connected in series with one of the test leads and either of the ohm tip-jacks.

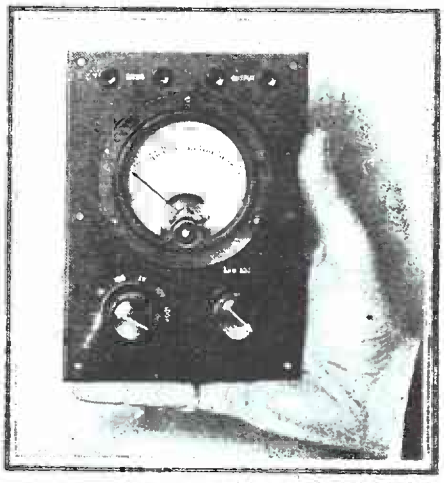

Fig. A
Front view.

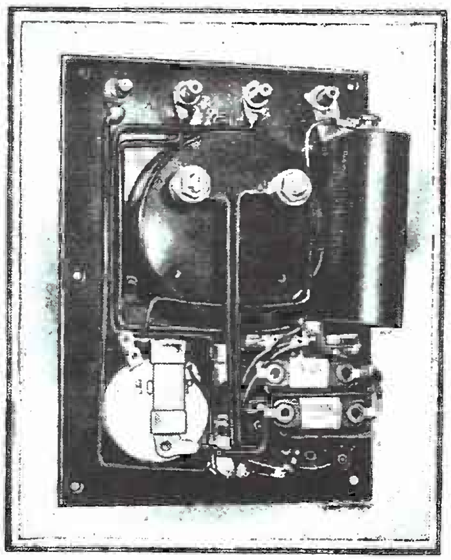

Fig. B
Interior view showing connections.

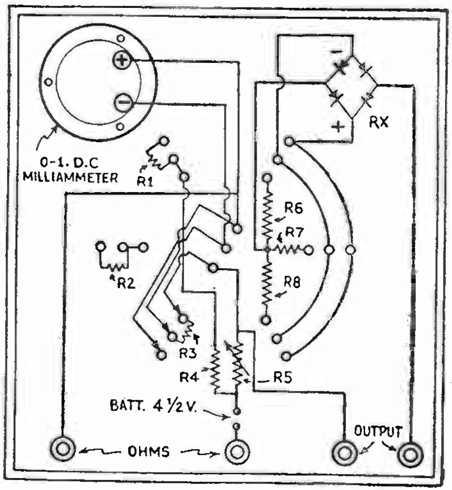

Fig. 1
Schematic circuit.

List of Parts

The list of parts used are as follows:

One Weston 301. 0-1-ma. meter;
One Taurex rectifier. RX;
One Van 100-ma. shunt. R1;
One Van 10-ma. shunt. R2;
One Clarostat 50-ohm fixed-resistor. R4;
One Electrad resistor. type RI, 1000 ohms. R5;
One Lynch 4.000-ohm resistor, 1 watt. R3;
One Lynch 500-ohm resistor, 1 watt. R6;
One Lynch 100.000-ohm resistor. 1 watt, R7;
One Lynch 100.000-ohm resistor. 1 watt, R8;
Four International Air tip-jacks;
One bakelite panel 4½x6¼x⅛ ins.;
One Best switch, Type 3NS6K;
One 4½-volt battery;
One pair International Air test leads, No. 128.

A Gooseneck-Type Vacuum-Tube Voltmeter

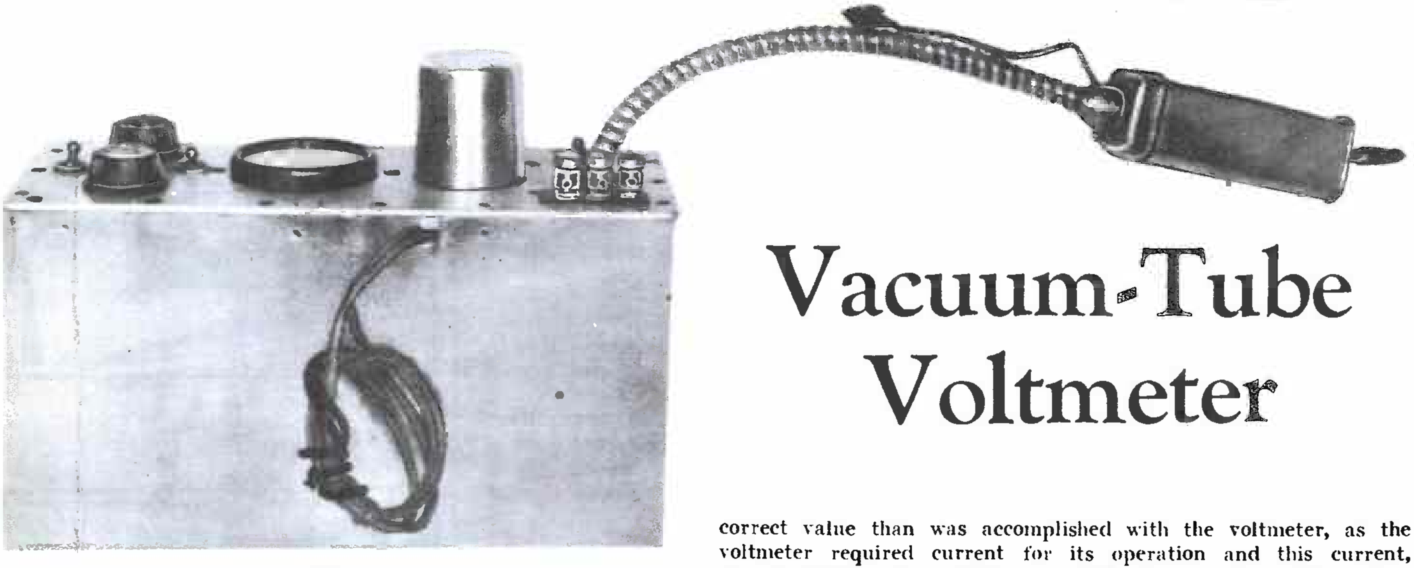

Fig. A

External view of the shielded Gooseneck V.T. voltmeter.

EVERY art, every work, has its special tools, else the artisan could not accomplish his various tasks. The tools of the radio engineer are delicate and sensitive measuring instruments. Of all the measuring instruments employed by the progressive engineer and technician, none can surpass the vacuum-tube voltmeter in its vast and diversified uses. While it is not the purpose of the writer to expound to any great extent on the subject, it is believed that many employed in the art of radio are not familiar with the instrument and its uses, else they would not be disrupting their nervous systems in the operation of instruments which are a college professor's delight but not conducive to production in a busy laboratory.

The term "voltmeter" has naturally lead many to believe that the instrument is useful only for measuring voltages. This is erroneous, as the device may be used to make other measurement indirectly and, in addition, has the characteristic of no power consumption from the device or apparatus under test, as is the usual case with the ordinary service voltmeter. A case in point; how many have measured the voltage on the screening-grid, which has its potential fed through a series resistor, with the ordinary 1000-ohm-per-volt voltmeter, adjusted the voltage to normal, and still have the stage persist in oscillation, yet by varying the voltage on the screening-grid the oscillations would be overcome? Performing the latter operation, the voltage was adjusted more nearly to the correct value than was accomplished with the voltmeter, as the voltmeter required current for its operation and this current, though minute, was sufficient to alter the correct reading. Had the potential been measured by a vacuum-tube voltmeter, the potential could have been adjusted to the correct value, since the grid of the vacuum-tube voltmeter requires no current for its correct function. On the contrary, if current be made to flow in the grid circuit, inaccuracies will result as the tube will no longer possess a linear characteristic.

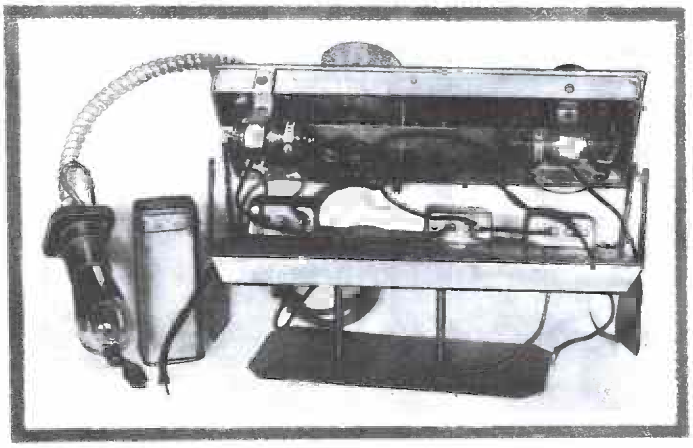

Fig. B

Internal view showing the layout of the parts.

Measurements Possible

A few of the measurements which may be accomplished with the vacuum-tube voltmeter are: field-strength measurement, percentage of modulation measurement, measurement of large and small resistors, inductors and capacities, measurement of both radio and audio frequencies, amplification at radio and audio frequencies, power output, hum measurement, distributed capacity of coils, mutual inductance between coils (coefficient of coupling), and audio frequency characteristics of loud-speakers. Most of these measurements are not made with the instrument alone or may not be direct measurements, it is true, but the labor involved by using a vacuum-tube voltmeter set-up is far less and, as mentioned above, more accurate than with most other systems of measurement.

With these things in mind, in addition to other problems which experience with other types of vacuum-tube voltmeters had taught, the writer wished to design and construct an instrument that would not cost a fortune and would have a high accuracy. It is possible to construct a single tube vacuum-tube voltmeter which will measure small potentials, but the cost of the low-range microammeter used with such an instrument is prohibitive to users other than large

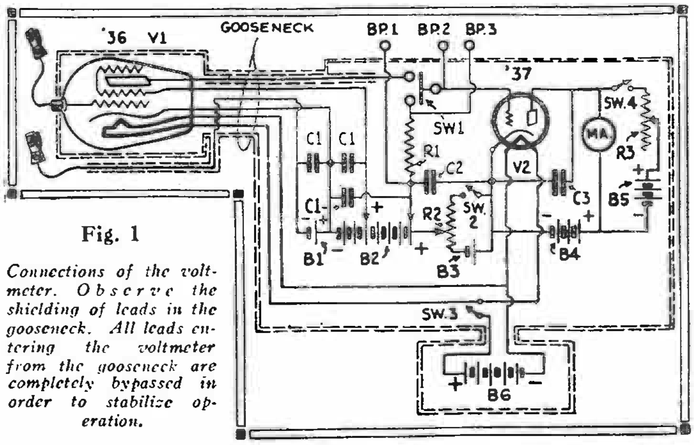

Fig. 1

Connections of the voltmeter. Observe the shielding of leads in the gooseneck. All leads entering the voltmeter from the gooseneck are completely bypassed in order to stabilize operation.

laboratories. The instrument which is described in the following paragraphs and illustrated in Figs. A and B, has been made as versatile as possible and has a voltage range for alternating currents of approximately .0005 to 100 volts, or to greater values as desired. It has a D.C. voltage range of approximately .1 to 100 volts or greater if desired. It is designed principally for radio frequency measurements, and is provided with a single direct-coupled R.F. stage. The R.F. tube is placed at the end of a long flexible neck (made from BX cable), thus the name given the instrument—"gooseneck." This is done in order that the connections between the point to be measured and the control grid of the V.T. voltmeter can be made as short and direct as possible to minimize pickup of strays, losses, and resultant inaccuracies.

Batteries

The new automobile tubes, the '36 and '37, lend themselves admirably to this instrument because of their heater-type construction, non-critical filament requirement and the use of a common filament supply. The filament requirement of the '36 and '37 is 6 volts at .3-ampere. The source of supply may be four No. 6 dry-cell batteries. These are placed in a metallic shield-can which is readily constructed from galvanized sheet iron or tin. Some of the larger battery-manufacturers make a 6-volt unit in a metallic container which is satisfactory.

The batteries for plate supply are contained within the housing of the V.T. voltmeter (see Fig. B) and are; two single flashlight cells of 1.5 volts each, two 4.5-volt "C" batteries, and six type 4156 Burgess (or similar size) 22.5-volt "B" batteries. The only other item of real expense, with the exception of the two tubes, is the microammeter. This may be either a Weston or a Jewell, 0 to 200-microampere scale, of the model 301 type. The balance of the materials, with the exception of the switches, will probably be found in the "junk box."

Construction

The container of the V.T. voltmeter is made in four parts: the panel, the socket support, the battery carrier, and the cover. The first of these to be prepared is the panel. This is laid out in accordance with the photographs and the sketch. It is made of sheet aluminum ⅛ in. thick, 4½ ins. wide and 12 ins. long. While aluminum and the size given are recommended, the constructor may use any metal and may change its shape; however, practice has shown that the shape given is more convenient.

The hole for the meter and the hole for the tube-well are next cut out. This may be done with a fly cutter or may be accomplished by drilling a series of small holes around the inner circumference after which the inner portion is removed and the edges filed smooth. Next, drill the holes for the mounting of the potentiometer R2, the bucking-circuit resistance R3, the switches SW1, SW2, SW3, SW4, and the three holes for the binding posts. The hole for the insertion of the gooseneck or BX is next drilled. The size will depend upon the size of the BX. The BX should be large enough to place six leads through; one, the plate lead, is shielded. After these holes are drilled, a series of smaller holes is drilled around the edge of the panel at equi-distances. These are then countersunk to take a 6/32 flat-head machine screw. These holes are provided to anchor the ½- by 1-in. angle, aluminum or brass, which is made into a rectangular frame and fastened underneath the panel. The details of this construction are shown in Fig. B.

The socket support is next prepared. This may be any kind of material but aluminum is recommended as it is easier to work. It is 1/16-in. thick, 2 ins. wide, and 6½ ins. long. It is suspended from the panel with threaded rods ¼-in. in diameter and 1½ ins. long. In addition to this support, the socket panel is fastened to the microammeter, taking care that the terminals of the meter are insulated from the metal.

The battery carrier is next made, and in turn may be made of any metal of such thickness as to be sufficiently rigid. It is cut and bent as detailed in Fig. B.

Making the Gooseneck

The gooseneck, as it has come to be called, is made of three parts, exclusive of the six leads that pass through the BX. The parts are: a length of ½-in. (or even larger if desired) BX hollow tubing, an empty "Mennens" talcum power (for men) can, and a Pilot type 217 molded bakelite socket or one of similar size or shape. The top of the talcum powder can is pried off, care being taken not to bend or disfigure either the can or the top. The perforated end of the top is drilled out to pass the BX tightly. The BX is then soldered firmly to the top. To remove the paint or enamel from the can, hold it over a gas burner until the enamel is burned nearly off, then finish the job by rubbing with steel wool.

Next, a disc of brass, copper, or iron 1¼ in. in diameter is secured. Three holes are drilled ¼-in. from the edge and equi-distant from each other; these are provided to fasten the neck to the panel. This disc is now soldered to the other end of the BX. The six leads are now provided, one of which should be shielded with woven wire braid. These are passed through the BX. The leads are then soldered to the rivets or eyelets of the Pilot socket and the extending prongs of the socket are removed. It is recommended that colored leads be used as this will prevent confusion and a great deal of testing. The socket is next fastened to the top of the gooseneck making sure there is clearance between the socket and the sides to allow the can to slip into place. The bottom of the can is drilled with a ½-in. drill to accommodate a rubber grommet. Five leads are soldered to the socket; the extra lead, which is the grid return, is brought through the top of the talcum powder can, just under the socket. The end of the lead is then provided with a battery clip. A control-grid clip of the cap type is also provided with a battery clip.

The gooseneck is next fastened to the panel, leaving the leads sufficiently long to reach to the various switches and parts. The socket panel and meter as well as the other parts are mounted, and the instrument is wired as shown in Fig. 1. Care should be exercised in wiring as the time expended will amply repay the constructor. The "C" batteries are held in position with brackets, and connections are made to them by soldering direct, or by soldering screws to the batteries, after which the leads may be connected with lugs and nuts.

The feed resistor R1, is soldered direct to the BP2 binding post. The bypass condensers C1, C2, and C3 are soldered direct to the top of the battery carrier, which in turn, after wiring is complete, is fastened to the angle on the underneath of the panel. The details of the cover are given in Figs. A and B and will not be explained here as it is simple of construction. It is made, however, to fit over the angle sides of the top.

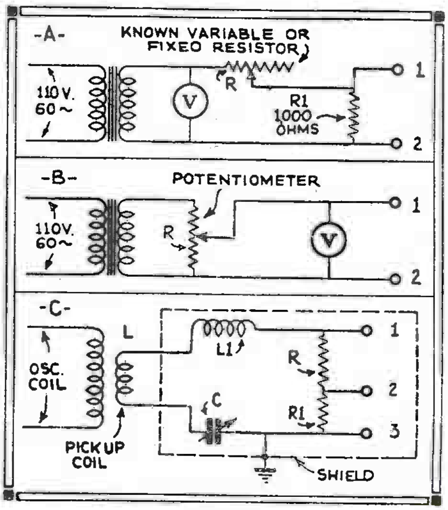

Fig. 2

Three methods of calibrating the voltmeter are shown at A, B, and C. Any one may be used, depending upon the apparatus on hand.

Calibration Procedure

The insertion of the binding posts on the panel and the switch SW1, which will be noted is a three point single-throw switch, allows the operator to switch out the amplifier tube and to use the tube V2 alone as an ordinary V.T. voltmeter. This arrangement also allows the operator to extend the range of the instrument to any scale desired, by the use of an external voltage multiplier which is described in a later paragraph.

The instrument is first calibrated across the binding-post terminals. Either of two methods of calibration may be used as shown in schematic form in Figs. 2A and 2B. That of Fig. 2A is recommended. In either case, an A.C. voltmeter, having a maximum voltage scale of 3 volts, and a filament transformer with a winding of 2.5 volts are required. The resistor R, Fig. 2A, is a known resistance and is more convenient if in the form of a decade resistance box, although this is not necessary. The V.T. voltmeter is placed across the terminals 1 and 2 and is then calibrated. The voltage drop across the resistor R1 is the ratio of R1 x E, divided by R1 plus R, in which E is the reading of the voltmeter. The voltmeter is thus calibrated over its entire range by varying the ratio between R1 and R and by simple calculation.

The method shown in Fig. 2B, while not as accurate, is satisfactory. A potentiometer R is placed across the filament winding of the transformer with the A.C. voltmeter connected across one side of the transformer

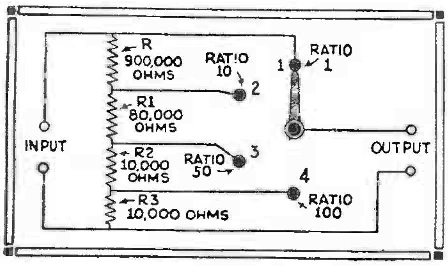

Fig. 3

A multiplier that facilitates increasing the range of the voltmeter 100 times.

and to the arm of the potentiometer. The V.T. voltmeter to be calibrated is then connected across the A.C. voltmeter at terminals 1 and 2. By adjusting the position of the potentiometer arm the voltage may be varied and the V.T. voltmeter calibrated accordingly. The resistance value of the potentiometer may be 200, 400 or 1000 ohms, the higher value giving the smoother adjustment. After the tube V2 has been calibrated, the instrument may be calibrated on radio frequencies, using the arrangement given in Fig. 2C.

A radio frequency oscillator, a pickup coil L in series with coil L1, the tuning condenser C, and the resistors R and R1 are required. The oscillator should be calibrated over the band of frequencies to be used in the calibration of the V.T. voltmeter. The resistance R should be 49 ohms and the resistance R1, 1 ohm. This will give a ratio of 50 to 1. The resonant circuit consisting of L, L1, C and the resistors R and R1 is now placed in resonance with the calibrated oscillator. With an ordinary V.T. voltmeter, or using only the section comprising V2 as has been described, the voltage is measured across terminals 1 and 3.

Suppose that the current flowing through the resonant circuit is 4 milliamperes, then the voltage across terminals 1 and 3 will be .2-volts. The voltage across the 1-ohm resistor will then be .2-volt divided by the ratio which is 50, giving a voltage across terminals 2 and 3 (the 1-ohm resistor) of .004-volt.

Thus, the V.T. voltmeter with the amplifier tube V1 is calibrated over its entire scale. The instrument should be calibrated at various radio frequencies in order that the amplifying characteristics of the amplifier tube will be known. It is important that the voltage across terminals 2 and 3 be kept constant at .004- or .005-volt during this test, by checking the voltage across terminals 1 and 2 at frequent intervals. While the section comprising V2 of this instrument may be used for this purpose, it will be found more convenient to use a separate V.T. voltmeter, which may be only a temporary affair.

The Voltage Multiplier

This device is shown in schematic form in Fig. 3. It consists of four resistors: one 900,000-, one 80,000-, and two 10,000-ohm resistors connected in series to give a total resistance of one megohm. Taps are brought to a multipoint switch as shown. With the resistors arranged according to the illustration, point 1 will have a ratio of 1:1, point 2 will have a ratio of 10:1, point 3 will have a ratio of 50:1, and point 4 will have a ratio of 100:1. Thus, if the input terminals of the device are connected to a source of voltage between 50 and 100 volts, and the output terminals connected to the V2 section of the V.T. voltmeter, the voltage indicated when multiplied by 100 will give the correct value. Thus, if the voltage read on the meter is .9-volt, 100 times this would give 90 volts across the input terminals of the multiplier. It must be remembered that the input voltage to the voltmeter tube must not exceed 1.0 volt effective value. If the control grid of the voltmeter tube becomes overloaded, grid current will flow, causing a shift from the linear portion of the characteristic with resultant inaccuracies in the voltmeter reading.

Placing the Voltmeter in Operation and Adjustments

Before the instrument may be calibrated, it is necessary that the voltages of the tubes be properly adjusted. The voltages of the tube V2 are first adjusted. The terminals BP1, BP2, and BP3, Fig. 1, are first shorted. The switch of the bucking battery circuit is opened. This is SW4. The plate voltage of V2 and the bias voltage (the latter adjusted by the potentiometer R) are adjusted so that the current indicated on the microammeter is 10 microamperes. The switch SW4 is now closed and the variable resistor R3 is adjusted until the current read on the microammeter is 2 microamperes. The use of the bucking battery arrangement allows greater sensitivity of the V.T. voltmeter with greater accuracy, as it cancels out the steady plate-current flow of the tube. After this portion of the instrument is adjusted, the amplifier tube is next adjusted. The only required adjustment here is that of the screen-grid voltage which is adjusted to a value that will give maximum amplification from the tube. The potential will naturally be small due to the drop in plate voltage through the resistance R1. In calibration and measurement work, it is important that the voltmeter be shielded from possible strays as otherwise, inaccuracies will result in the work.

List of Parts

One Weston model 301, 0 to 200 microamperes, or Jewell microammeter, M1;
Three GE or Hart and Hegerman power switches, SW2, SW3, SW4;
One GE or H. and H. three point, single-throw power-switch, SW1;
One Pilot type 217 molded bakelite socket, V1;
One UY type wafer socket, V2;
One Electrad Supertonatrol, 0 to 500,000 ohms, R3;
One Yaxley midget 400-ohm potentiometer,. R2;
One Lynch or Accuraohm wire-wound precision resistor. 200,000 ohms, R1;
Three binding posts; BP1, BP2, BP3;
Two Sprague or Aerovox, 1-mf. fixed condensers, C2, C3;
Three Sprague or Aerovox, 1-mf. .1-mf. fixed condensers, C1;
One 12-in. length hollow BX tubing, gooseneck;
One empty "Mennens" talcum powder can, to shield V1;
One aluminum panel ⅛-in. thick, 4½-ins. wide, 12 ins. long for panel;
One sheet aluminum 1/16-in. thick, 2 ins. wide, 6½ ins. long, for wafer socket support;
One battery carrier as described;
One sheet tin container; for cover;
One type UY 236 tube, V1;
One type UY 237 tube, V2;
Six portable 22½-volt "B" batteries, Burgess type 4156, B2;
Two 4½-volt "C" batteries, B4, B5;
Two 1½-volt flashlight cells, B1 and B3;
Four No. 6 dry-cell batteries in metallic container for filament supply, B6.

Tester for Grounded Circuits

HERE is a suggestion for a simple tester suitable for locating grounds and testing continuity; provided that the current flow in the circuit—which is about 100 milliamperes—is not excessive for whatever device is in the circuit. It is admirably suited for rapid checking and is inexpensive.

It consists of a porcelain lamp socket; a wooden base, 2½x6 inches; about ten feet of lamp cord and a receptacle plug; four small staples, two 8-inch lengths of stiff copper wire (No. 8 to 14); a ten-watt electric light bulb; and six feet of single-strand cord.

Mount the socket on one end of the wooden base, fasten one end of the lamp cord to one side of the socket, putting two staples over it and into the base as shown. Staple the other cord to the base with one staple. Cut the insulation back on the cord about three inches; and splice it to a three-foot piece of the single cord, being careful to solder it and tape the joint well. On the loose end of the single cord, cut the insulation back and solder it to one of the pieces of stiff wire, taping it well. Fasten the remaining piece of cord to the socket, and similarly solder to it, and tape over, the other piece of stiff wire. Staple this cord to the base so that it will not pull loose.

To use the tester, insert the plug in a light socket, screw the bulb into the socket, and place the prongs in contact with each other. The bulb should light. Now, when you test a circuit with the points, it is closed if the lamp lights; it is open or very high-resistance if the lamp does not. This outfit is also convenient as a light for the work-bench, in which case a larger bulb is used.

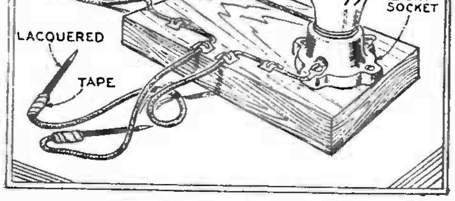

While the cheap, convenient tester pictured is known to many service men, there are others who will find it a useful addition to the kit.

Using the Vacuum-Tube Voltmeter

In this three-part series of articles, the various uses of vacuum tube voltmeters will be discussed with particular reference to radio servicing and measurement.

IN response to the many requests received by the editor for information concerning the use of vacuum tube voltmeters, such as the goose neck V. T. voltmeter described in the preceding article, we present herewith a series of articles setting forth the methods of measurement and proceedure in which the instrument may be employed.

As in all measurements, the accuracy of the measured result depends upon the accuracy with which the instrument has been calibrated, and the care with which the measurements are conducted.

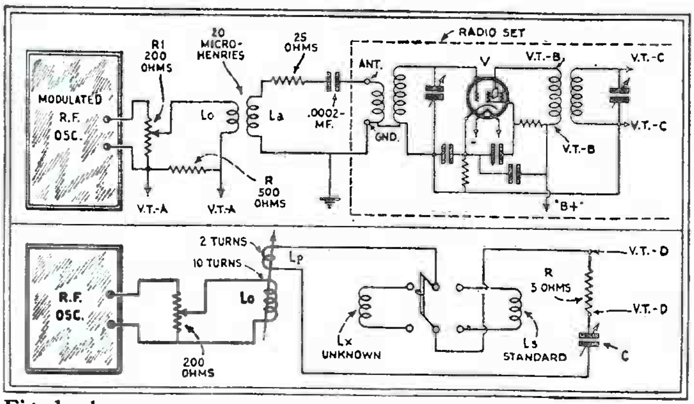

Fig. 1, above. *Oscillator, dummy antenna, and V.T. voltmeter.*
Fig. 3, below. *Substitution method of measuring inductance.*

Radio-Frequency Measurements

To conduct measurements by which the gain of an R.F. amplifier of one or more stages may be determined, a modulated R.F. oscillator, having the frequency range over which the amplifier is to be measured, is required. It is customary to modulate the R.F. signal with an audio signal of 400 cycles at 30 percent modulation. The signal from the modulated oscillator is induced into an artificial antenna of known constants; the set-up of the oscillator, the artificial antenna, and the amplifier to be measured is shown in Fig. 1. The mutual inductance between the coupling coil Lo of the oscillator and the 20-microhenry inductance La of the artificial antenna is determined by a method to be described in a later paragraph. Having determined the mutual inductance between Lo and La, the current through Lo may be measured by connecting the V.T. voltmeter across the 500-ohm resistance in series with Lo; this is shown in Fig. 1 at R.

The resistance R1 may be a 200-ohm potentiometer, and is used to control the output of the oscillator.

Having determined the voltage drop across R and knowing the resistance of R, the current may be determined by the application of Ohm's Law. The peak-voltage drop across R must be converted to effective volts by dividing the peak-voltage by 1.4. The voltage (effective) induced in the artificial antenna may now be determined by the formula:

$$\mathrm{Ea} = 6.28 \times \mathrm{I} \times \mathrm{M} \times \mathrm{f}$$

Where Ea is artificial antenna voltage, I is the calculated current through Lo, M is the mutual inductance between Lo and La, and f is the frequency in cycles.

The R.M.A. standard artificial antenna consists of a coil of 20-microhenries inductance in series with a 25-ohm resistance and a .0002-mf. condenser. This, during the measurements, is connected directly across the antenna and ground binding posts of the receiver or R.F. stage to be measured.

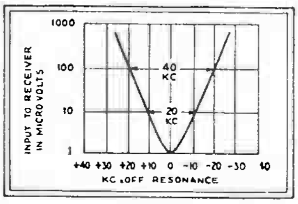

Fig. 2
Typical selectivity curve.

Gain Measurement

Having provided a means of knowing the exact voltage input into an R.F. stage or amplifier, the gain may be measured by placing the V.T. voltmeter terminals across the plate-load of the single stage or the output of the amplifier whose gain is to be measured.

If the voltmeter is applied across the plate primary as shown at V.T.-B in Fig. 1, it is necessary that care be taken to insulate the V.T. voltmeter at all points from the chassis of the receiver; otherwise, a short will exist, as the V.T. voltmeter in this position is above ground potential by an amount equal to that of the plate-voltage of the amplifier stage.

In measuring the gain of tuned R.F. amplifiers, the induced voltage into La must be constant for all frequencies. It is therefore necessary to adjust the input to a predetermined peak value before each frequency measurement is made.

The gain of a single stage, or of the entire amplifying system is the ratio of the output voltage to the input voltage, and is determined by dividing the output by the input voltage. These voltages should be in effective values.

If it is desired to plot *sensitivity* and *selectivity* response curves of an R.F. amplifier, the measurements should be made in conjunction with the A.F. amplifier of the receiver. The sensitivity curve is the input in microvolts plotted against the radio frequency in cycles. *The output of the receiver is kept constant at .05-watt, with the input frequency varying from 1500 to 600 kc.* The R.F. oscillator is adjusted to 400 cycles at 30 percent modulation during these measurements.

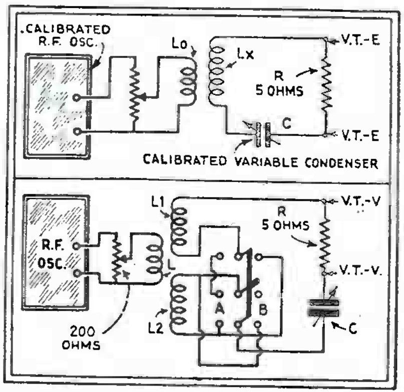

Fig. 4, above. *Measuring distributed capacity.*
Fig. 5, below. *Another measuring circuit.*

The sensitivity of a receiver is determined by a signal (input) that will produce a standard output of .05-watt from the receiver (a 10-ohm resistor connected in place of the voice coil of a dynamic speaker should have .707-volt across it for .05-watt output.) When plotted as a curve this is interpreted as follows: An input signal at any frequency will produce a standard output from the receiver when this input signal has a local field strength equal to the input in microvolts, as indicated on the curve directly above the frequency of the signal: thus, to determine the sensitivity of the receiver in *microvolts-per-meter* at any point (assuming an antenna 4 meters in height as standard), a selected point along the curve (in microvolts) is divided by 4.

The selectivity curves are plotted with field-strength ratios (input microvolts) as the ordinates, and the kilocycles *off* resonance as the abscissas. The first quadrant of the graph (to the right of the center or zero line) is plotted in minus kilocycles off resonance, while the second quadrant (to the left of the center resonance line) is plotted in plus kilocycles off resonance.

The field strength ratio at any frequency is the input in microvolts compared to the input at resonance. The *selectivity* rating of a receiver is defined as the width of the resonance curve when the input signal strength is both 10 and 100 times that at resonance. Thus, in Fig. 2, the selectivity is 20 kc. at 10 times normal and 40 kc. at 100 times normal. (Normal being the input to the receiver at resonance.)

Measurement of R.F. Inductance

The measurement of inductance cannot be accomplished directly with the voltmeter. The instrument is used as an indicating device only.

Two dependable methods are given in the following paragraphs. The set-up for the substitution method is given in Fig. 3, while that of the known frequency-capacity method is given in Fig. 4.

In the substitution method, the only known factor necessary is the calibration of the variable-inductance standard. The condenser C need not be variable. The coupling between Lo and Lp should be very loose. The oscillator is tuned to a frequency which need not be known, but must be in resonance (indicated by the maximum deflection on the V.T. voltmeter) with the oscillatory circuit formed by the unknown inductance, the 2-turn pickup coil Lp, the condenser C, and the resistance R which should be about 5 ohms. When the maximum indication is obtained on the V.T. voltmeter, connected at V.T.-D, the standard inductance is substituted for the unknown inductance. A convenient means of doing this is with a D.P.D.T. switch as shown.

Care should be taken that the settings of the oscillator, pickup coil, or any portion of the wiring are not disturbed. When the standard inductance has been substituted for the unknown, it is then varied until maximum indication is obtained on the V.T. voltmeter. The calibration of the standard inductance at the maximum indication is now determined. This value is the exact inductance of the unknown coil.

In the known frequency-capacity method shown in Fig. 4, the oscillator is adjusted to some *known* frequency; coupling between the oscillator inductance Lo and the unknown inductance Lx is made as loose as possible.

The calibrated condenser is then varied until the circuit is brought into resonance with the known frequency of the calibrated oscillator as indicated by the maximum deflection of the V.T. voltmeter which is connected across the 5-ohm resistance R (shown at V.T.-E).

By calculation, the inductance Lx may be determined by the following formula:

$$Lx = \frac{LC}{C1}$$

Where LC is the oscillation constant of the frequency, and C1 is the capacity in microfarads of the calibrated condenser C.

The oscillation constant for the frequency may be obtained from the LC table given on *page* 205.

If the operator does not have access to such a table the inductance may be calculated by the formula given below:

$$Lx = \frac{\left(\frac{V}{f}\right)^2}{K2 \times C}$$

Where V is the velocity of propagation (299,800.000 meters per second), f is in cycles per second, C is the capacity in microfarads, and K is 1882 (if the inductance is expressed in microhenries).

Measuring Mutual Inductance

The set-up for the measurement of mutual inductance is given in Fig. 5. As in the case of measuring other inductances, this cannot be measured directly.

The resistance R is of 5 ohms and the condenser C may be fixed or variable although the variable is preferable. The inductances L1 and L2 are *arranged in the exact manner in which they are to be coupled in the receiver.* If possible, they are attached together as, for instance, the primary and secondary of the ordinary R.F. tuned transformer. The triple-pole double-throw switch is convenient although not necessary. In any event, the inductances are first connected so that their fields aid or add. The true inductance of the combination is then measured. This corresponds to position A of the switch. The inductances are then arranged so that their fields oppose or subtract: this corresponds to position B of the switch. The true inductance of the combination with the fields opposing is now measured.

From the formula following, the mutual inductance M may be determined:

$$M = \frac{La — Ls}{4}$$

Where La is the inductance of L1 and L2 adding; Ls with their inductance subtracting; and M is the mutual inductance in microhenries.

True Inductance

It is thought pertinent at this time to describe the determination of true inductance, although this has no direct bearing on V.T. voltmeter measurements. However, to determine mutual inductance it is necessary that the true inductance of the coils be known.

All inductances have distributed capacity which in reality is in shunt with the inductance of the coil. The true inductance and the distributed capacity give us the apparent inductance of the coil.

When the apparent inductance of a coil is known (the latter measurement is described in a following paragraph), the true inductance may be determined with the following formula:

$$Lt = \frac{La}{\left(1 + \frac{Cd}{C}\right)}$$

Where Lt is the true inductance in microhenries, La is the apparent inductance, Cd is the distributed capacity, and C is the tuning capacity with which the apparent inductance of the coil was determined.

Distributed Capacity of Inductances

Distributed capacity of inductances may be determined by either of the two methods described here. Both will give accurate results. The setup in each instance is the same as that given in Fig. 4.

The inductance, of which the distributed capacity is to be determined, is connected as Lx in the figure. A minimum of four readings at different frequencies with different capacities of the calibrated condenser C are made. These readings of the calibrated condenser are plotted as abscissas, against the wavelength squared as ordinates, on cross-section paper. The result will be practically a straight line. This line is continued to the negative value of capacity which is on the *left of the zero capacity point.* The distance between the point of intersection with the horizontal line and the zero point will be the distributed capacity of the coil.

The second method is somewhat easier. The condenser C is adjusted to about 75 per cent of its total capacity. The coil to be measured is again Lx; call this capacity C1. The oscillator is now brought into resonance by using the V.T. voltmeter as previously described. The capacity of the calibrated condenser C is now reduced to a value about one-quarter of its total capacity, until a maximum indication is obtained on the V.T. voltmeter at resonance with the *second-harmonic* of the oscillator. *The oscillator is not disturbed from the original setting.* The capacity of the standard condenser at this setting is designated as C2. The distributed capacity Cd is determined by calculation from the formula:

$$Cd = \frac{C1 — (4 \times C2)}{3}$$

Measurement of Variable and Small Fixed Capacities

The measurement of variable and small fixed capacities up to approximately 006-mf. is easily accomplished using the same set-up of apparatus as given in Figs. 3 and 4. The positions of the standard inductance and the standard variable capacity C are interchanged; the unknown capacity being placed in the position formerly occupied by the inductance under test. The maximum indication on the V.T. voltmeter is obtained in the same manner as for the inductance tests. The oscillator is brought into resonance with the oscillatory circuit which is tuned by the unknown capacity. The calibrated standard capacity is next substituted for the unknown after which the oscillatory circuit is brought into resonance with the oscillator by its use. The capacity of the calibrated condenser will then be the same as the unknown capacity, the value of which is determined from the condenser calibration curves.

When the set-up given in Fig. 4 is used for the determination of unknown capacities, a standard fixed inductance is used. This is placed in the circuit with the unknown capacity as shown in the figure and the calibrated oscillator brought into resonance with the oscillatory circuit as indicated by the maximum deflection of the V.T. voltmeter. Knowing the value in microhenries of the standard inductance and the frequency of the calibrated oscillator, the capacity may be determined by calculation from the following formula:

$$Cx = \frac{LC}{L1}$$

Where LC is the oscillation constant of the frequency, L1 is the inductance in microhenries, and Cx is the value of the unknown capacity in microfarads.

If the LC table is not handy, the capacity may be determined from the following formula:

$$Cx = \frac{\left(\frac{V}{f}\right)^2}{K2 \times L}$$

Where V is the velocity of propagation (299.800.000 meters per second, f is in cycles per second, Cx is the capacity in microfarads, and K is 1882 (a constant), and L is the inductance in microhenries.

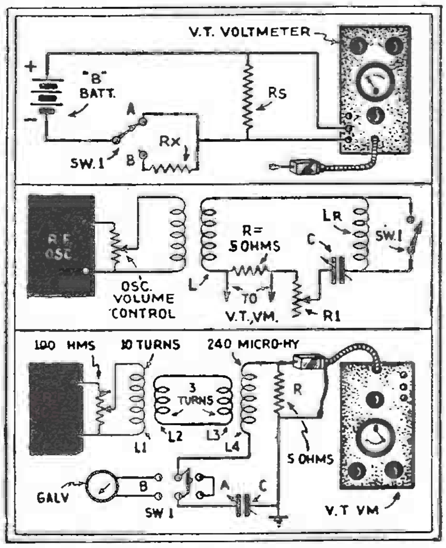

Fig. 1, above. Fig. 2, center. Fig. 3, below.

USING *the* V. T. *Voltmeter*

(PART II)

The V.T. voltmeter in audio-frequency work.

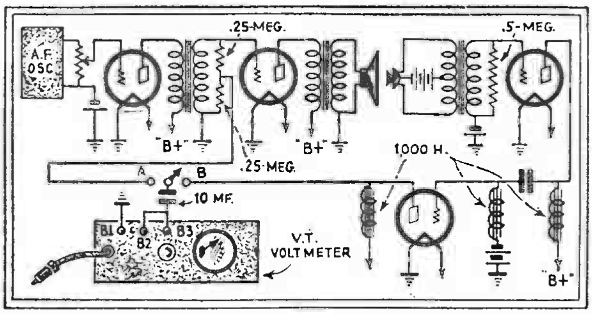

Fig. 8
Arrangement of apparatus for conducting loudspeaker response measurements. The characteristics of the microphone and its associated apparatus must have been previously determined.

THE vacuum-tube voltmeter is just as useful in A.F. as in R.F. measurement work. As a general rule, more accurate results may be obtained at audio frequencies, because the effects of stray and distributed capacities are reduced to a minimum.

As with radio-frequency measurements, the requirement for this work is an ample source of power of such frequency as is needed to determine the characteristics of the device to be measured.

Audio-Frequency Gain Measurements

The method of measuring the gain characteristics of audio-frequency amplifiers is the same whether one or more stages are to be measured. Naturally, the more stages of amplification to be measured, the lower must be the input to the amplifier.

The set-up for these measurements is given in Fig. 6. If the gooseneck type V.T. voltmeter is employed, the amplifier stage in the instrument is not used. The connections to the instrument are made to binding posts B1, B2 and B3 as shown. In order to isolate the D.C. component of the output of the amplifier under test from the meter, a large condenser of about 10 mf. is connected in series with the grid of the V.T. voltmeter; the grid leak for the voltmeter tube being already contained within the instrument, and is connected by shorting B2 and B3. A D.P.D.T. switch is used in order that the terminals of the instrument may easily be connected to either the input or the output of the amplifier under measurement.

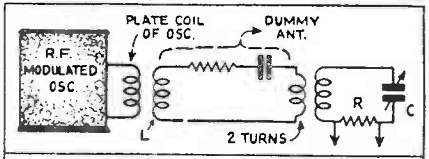

Fig. 9, above. *Set-up for percentage modulation tests.*

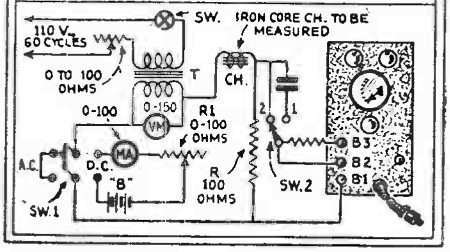

Fig. 10, below. *Apparatus for measuring the inductance of iron-core coils.*

The standard resistance in the plate circuit of the amplifier under measurement should have a value equal to twice the plate resistance of the tube. The procedure for determining the audio-response characteristics of the amplifier is to keep the input to the amplifier at a *constant voltage* as the impressed frequency is varied, recording the output (as read on the V.T. voltmeter) after each step. The input voltage may be kept constant at .5-volts and the frequency plotted in 50- or 100-cycle steps on logarithmic graph paper. The frequency, of course, might be varied in larger or smaller steps; when varied in larger steps, there is greater possibility of missing possible peaks which would be detected when the frequency is varied in smaller steps.

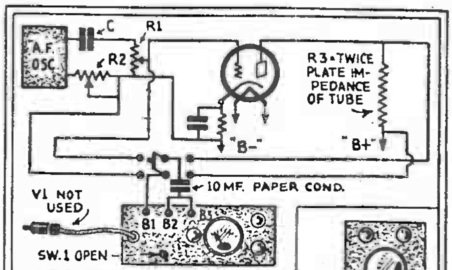

Fig. 6, above. *Set-up for making A.F. measurements.*

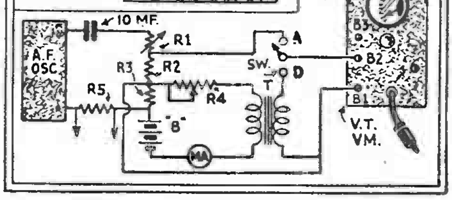

Fig. 7, below. *Set-up for measuring the gain of audio-coupling units.*

Power Amplification

In measuring the power amplification of an audio system the set-up is the same as given in Fig. 6. The resistance R1 is 4000 ohms; R2 may be a variable resistance of 50,000 ohms, and is used to adjust the current flow through R1. From the voltage drop across R1, the current flow is calculated. The resistance R3, which has a value equal to twice the plate impedance of the tube, is measured for the voltage drop; the current through it being then determined by Ohm's Law.

If the resistance of both R1 and R3 are equal, the power gain in decibels may be determined by the following formula:

$$PA = 20 \log_{10} \frac{\text{Output current (Io)}}{\text{Input current (Ii)}}$$

If the resistance of R1 and R3 are not the same, the following formula is used:

$$PA = 20 \log_{10} \frac{Io\sqrt{R3}}{Ii\sqrt{R1}}$$

The source of power for the above measurement should be a suitable audio-frequency oscillator having a range of frequencies from 40 to 10,000 cycles per second and a sufficiently large output. The A.F. input to the receiver is adjusted to a value that will give the rated undistorted output from the power tube of the receiver. In this manner, the sensitivity of the amplifier is determined.

The power output may also be determined by measuring the current through R3. Having determined the effective value of current, and knowing the value of R3 in ohms, the power output in watts may be calculated by squaring the value of current and multiplying the result by the value of R3.

If the receiver has a large amount of hum or noise, it is necessary to first determine its value, which must later be subtracted from the *total* power, computed as described above, in order to secure the power due to the signal. The same procedure of measurement is followed when measuring receivers having a choke- or resistance-filter output system.

Gain of Audio Coupling Units

In measuring the gain of audio-coupling units, the set-up given in Fig. 7 is used. The resistance R1 is a variable 50,000-ohm unit; R2 and R3 are 250 ohms each; R4 is a variable resistance which is adjusted to a value equal to the impedance of the tube that would normally feed into the input of the coupling device. Once this latter resistance is adjusted to the proper value, it should not be disturbed. The battery "B" is adjusted to a value that would cause normal current to circulate through the primary of transformer T. The meter MA should be of such range as to suitably indicate the above current. R5 is a 500-ohm resistance, across which the A.C. voltage drop is measured by the V. T. voltmeter in order to determine the A.C. current in that circuit.

The procedure of measurement is to adjust the resistance R1 so that the voltage across the resistance R2 is kept at a constant value. This is indicated when the S.P.D.T. switch SW. is in position A. Since R2 and R3 are of the same value, the voltage drop across R3 will be the same as that across R2; the voltage across R2 is usually adjusted to 1. volt.

After the input voltage has been measured, the switch is shifted to position D and the voltage across the secondary of the coupling device is measured. The frequency characteristic of the coupling device may be determined by plotting the applied input-frequency against the output voltage, keeping the input voltage into the device at a *constant* value. During the course of the measurement, the input voltage should be checked from time to time.

Loudspeaker Response Characteristics

Loudspeaker response characteristics may be determined by using the set-up given in Fig. 8. In addition to the amplifier normally used to supply the speaker, an additional amplifier is required. This amplifier is used to strengthen the feeble currents picked up by a microphone placed at a suitable distance from the loudspeaker.

The V.T. voltmeter is arranged in conjunction with the S.P.D.T. switch, as shown in the schematic, in order that the voltage applied to the speaker may be kept at a constant value, as well as providing a means for measuring the output of the microphone amplifier.

In order that some degree of accuracy may be obtained in this measurement, it is necessary that the microphone and its amplifier have as near a flat frequency-characteristic as possible from approximately 30 to 10,000 cycles. In addition, where greater accuracy is desired, it is advisable to place both the speaker and the microphone in a large cabinet or small room, whose walls have been lined with sound absorbing material.

The characteristic of speakers are usually plotted on logarithmic paper, frequency against voltage pickup. As a rule, the measurement is only comparative, unless the operator knows the frequency characteristics of the measuring apparatus and of the room in which the speaker and the microphone is contained.

Phonograph Pickup Frequency Characteristics

In measuring the characteristics of phonograph pickups the setup as given in Fig. 6 is used, with the exception that standard-frequency records are employed instead of the audio-frequency oscillator.

The standard-frequency records are rated in decibels gain or loss. Inasmuch as the input voltage will be known, it is not necessary to try to measure the input of the pickup, which at best, is a complicated procedure in itself. The D.P.D.T. switch is therefore eliminated. It may be necessary, however, to use a similar arrangement in order to switch in the amplifier stage of the gooseneck V. T. voltmeter, when desired. The gain or loss in decibels is determined in the same manner as described under Audio-Frequency Gain Measurements.

P.E.C. Frequency Characteristics

The set-up to determine the frequency characteristics of photoelectric cells is the same as used for loudspeaker response measurements, Fig. 8, with the exception that a suitable neon lamp is used instead of the loudspeaker, and the photoelectric cell to be measured is substituted for the microphone.

Measurement of Modulation Percentage

The percentage of modulation of a transmitter or modulated oscillator may be determined by many different methods. The method described here is simple and has an accuracy of 5% which is sufficient for ordinary purposes.

The I.R.E. definition of percentage modulation is the ratio of one-half the difference between the maximum amplitude and the minimum amplitude of the modulated wave, to the average amplitude (expressed in percent). As the modulated current amplitude will vary above and below the unmodulated radio-frequency amplitude by equal amounts (when of sinusoidal wave form) the percentage of modulation may be calculated from the following formula:

$$\text{Percent modulation} = \frac{Im - Ic}{Ic} \text{ X } 100$$

Where the peak R.F. current, when modulated, is expressed as Im, and the peak R.F. current, when unmodulated, is expressed as Ic.

The set-up for the measurement is given in Fig. 9. The pickup inductance of the V.T. voltmeter (L) may be two or three turns of heavy insulated wire coupled to the plate inductance of the oscillator to be measured. The condenser C and the inductance together with the 100-ohm resistor R comprises a resonant circuit that is tuned to the frequency of the oscillator to be measured. The current through R is calculated (1) when the oscillator is modulated, and (2) when unmodulated.

Measuring Iron-Core Inductances

In measuring the inductance of iron-core coils, it is quite often desirable to know the inductance when direct current is circulating through the circuit in addition to the alternating current. The setup given in Fig. 10 provides a means of measurement whereby the inductance may be measured with only A.C. and with both A.C. and D.C. circulating.

To measure the inductance of the choke with only A.C. through the circuit, the D.P.D.T. switch is set to the A.C. position and the S.P.D.T. switch set to position 2. The voltage drop across the 100-ohm resistance R is now determined by the V.T. voltmeter. Having determined the current flowing through the circuit, and knowing the A.C. voltage as indicated by VM, the impedance is determined by dividing the voltage by the current. The inductance may now be calculated by the following formula:

$$\text{Inductance (in henries)} = \frac{Z^2 - (RL + 100)^2}{(6.28 \text{ x frequency})^2}$$

In the above formula the term RL is given; it is the D.C. resistance of the choke and may be determined by any convenient method.

To measure the inductance of the choke with both D.C. and A.C. through the circuit, the inductance is first measured with only the A.C. as described above. After the A.C. current and voltage of the circuit have been determined, the S.P.D.T. switch (SW.2) is set to position 1, and the equivalent indication on the V.T. voltmeter determined with the 10 mf. condenser in the circuit. This indication is recorded as being equal to the previous determined voltage drop across the resistance R.

The primary of the transformer is now opened, SW.1 is set to the DC position, leaving SW.2 on position 1. The potential of the tapped battery "B" and R1 are varied to give the desired D.C. through the choke. The current is indicated by a suitable D.C. milliammeter MA.

The transformer primary switch is next closed, the resistor in the primary circuit of T is adjusted until the indication of the V.T. voltmeter is the same as the value recorded in the first steps of the procedure, when the 10 mf. condenser was placed in the circuit. Now noting the new voltage value on VM, and the V.T. voltmeter indicating the same voltage drop, as was obtained without D.C. through the choke, the operator may calculate the impedance as for the A.C. measurement. From the impedance, having previously determined the D.C. resistance of the choke, the inductance in henries may be determined by the same formula.

Using the V. T. Voltmeter - Part III

RESISTORS of *all sizes* may be measured by the use of the setup Fig.1 *page* 106 If desired, a permanent setup as an ohmmeter may be made; the accuracy of measurement is very close to that obtainable by the Wheatstone Bridge method. Should the experimenter desire a permanent setup as an ohmmeter, the scale of the V.T. voltmeter indicating meter may be calibrated.

The procedure of measurement is to insert the resistor to be measured at RX. With SW. 1 placed on point "A," the voltage drop across the resistor RS is determined. Resistor RS may be of any value, although the lower its value, the lower the resistance that may be measured. It is recommended that two values one of 100 and a second of 10,000 ohms be used in order to have an ohmmeter reading from a low range to several thousand ohms.

After the voltage drop across RS, with the switch in position "A," has been determined, S.W.1 is thrown to position "B" and the voltage drop again measured. With the voltage drop measured across RS with the switch in position "A" known as Es, and the voltage drop across RS with the switch in position "B" known as Er, the value of the unknown resistance may be determined from the following formula:

$$\text{Resistance in ohms} = \frac{Es - Er}{Er} \times RS$$

Coil Resistance Measurement

It is sometimes necessary that the engineer know the resistance of an R.F. inductance. This is especially necessary in modern receiver design because the value of the inductance may be decreased; it is also desirable to know the power factor of a coil when it is enclosed within its shield.

The setup given in Fig. 2, provides a means whereby the operator may determine the resistance and then the power factor of a coil very quickly. The pickup coil L should have an inductance of approximately one-half that of the coil to be measured. The resistor R has a value of 5 ohms. The variable resistor R1 should have a range of 0 to 2,000 ohms and should be non-inductive. The condenser C should be of the precision type in which the change of resistance for capacity variations is a minimum, although any other variable condenser may be used and its resistance measured for particular capacity settings.

The circuit is tuned to resonance with the R.F. oscillator. The variable resistor R1 should be set at its zero position. The reading of the V.T. voltmeter when connected across the resistor R is noted. The S.P.S.T. switch across Lr is then closed. The circuit is now retuned to resonance. Care should be taken that the deflection of the V.T. voltmeter microammeter is not off-scale, as otherwise the meter will be damaged. The resistor R1 is adjusted until the same V.T. voltmeter reading is obtained as before closing S.W.1. The resistance setting of R1 will now be the resistance of the coil at the particular frequency employed. If the resistor R1 is of the decade calibrated type, it will not be necessary to measure the resistance to determine the correct value.

In order to determine the power factor of the coil, its inductive reactance is determined by the formula:

$$X_L = 6.28 \text{ x } F \text{ x } L$$

Where X_L is inductive reactance in ohms; F the frequency in cycles per second, and L is the inductance in henries. Having determined the reactance of the coil, the power factor may be determined from the formula:

$$P.F. = \frac{R}{XL}$$

where P.F. is the power factor, R the resistance of the coil, and XL is the inductive reactance of the coil.

The decrement of the coil in a circuit may be determined from the formula:

$$\text{Logarithmic decrement} = 3.1416 \text{ x } R \sqrt{\frac{C}{L}}$$

where R is the R.F. resistance of the circuit, C is the capacity in microfarads and L is inductance in microhenries.

Measuring the Inductance of Thermo-Galvanometers

The setup for the measurement of inductance of thermo-galvanometers is given in Fig. 3. L1, the radiating coil of the oscillator, should consist of 10 turns of wire on any convenient diameter tube; L2 and L3 are 3-turn pickup coils in a link circuit, L4 may be a standard broadcast inductance of 240 microhenries; the variable R should be a non-inductive 5-ohm resistor, across which is measured the voltage drop of the circuit for resonance indication.

The procedure of measurement is to first set the condenser C at approximately half its capacity; the frequency of the oscillator is brought into resonance with the circuit; the D.P.D.T. switch S.W. 1 should be in the "A" position. The accuracy of the measurement will depend upon the care in obtaining the maximum resonance indication on the V.T. voltmeter.

When the maximum resonance has been obtained, the capacity of the condenser C is determined. (If possible, the condenser should previously have been calibrated.) The thermo-galvanometer is now placed in the circuit by setting the switch to the "B" position. The circuit is again brought into resonance with the condenser C, and its capacity determined.

The inductance in microhenries of the thermo-galvanometer may be determined by subtracting the inductance of the circuit without the meter from the inductance of the circuit with the meter; the inductance being computed.

◆

ADAPTER FOR "RESISTANCE SERVICING"

WITH the coming of "resistance measurement" (prong of socket to chassis, etc.), as a basis of service procedure, the writer submits a description of a small unit which he has used for quite a while with satisfactory results. It speeds service work "like nobody's business!"

This device is a special plug adapter, illustrated in Fig. 1, which is cheaply and quickly constructed, its object being to provide a simple means of making electrical connection to the socket prongs when they are below the subpanel or surrounded by a non-removable shield. Contacts on the top plate are "straight through" connected to the prongs.

For its construction in UY-type, procure a 5-prong short-wave coil-form, such as the old Dresner, Octocoil, etc., and a flat piece of bakelite approximately the diameter of the coil form. Drill holes in the bakelite plate in the relative position of the tube prongs, and bolt short screws, to which are fastened lugs and lock washers, through these holes. To these lugs are soldered lengths of busbar which are then pushed through their respective holes in the prongs and drawn up snugly; soldering these pieces to the respective prongs ("grid" contact to grid prong, "plate" contact to plate prong, etc.,) completes the job.

A unit of this type having low-resistance, convenient contacts to "jab up against" when making a resistance test instead of "fishing around" in a hidden socket, is something that I think will appeal to other Service Men.

Of course the same idea can be adapted for any type of socket; for instance in making such a device for a six-prong socket, procure a tube base with the required number of prongs in it, drill six holes in the top plate and then proceed as described for the 5-prong tube circuits.

By measuring the resistance between the chassis and each prong of each tube socket, with the current turned off, and comparing the resulting figures with previously prepared tables for sets of similar type resistor, opens, shorts and changes in value; condenser shorts and leakage; and instrument shorts; opens or grounds are readily detected.

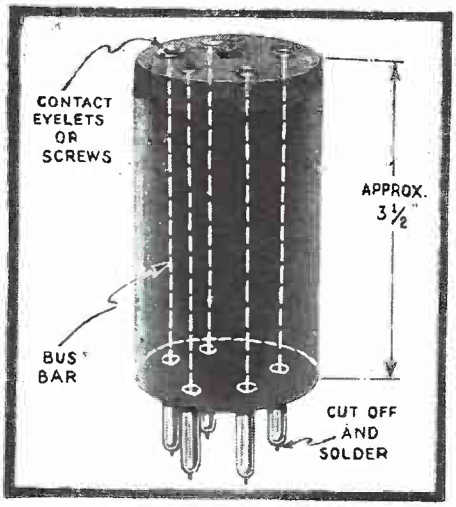

Fig. 1
Photograph of the new "resistance adapter."

A "SHORTED TURNS" TEST

Many Service Men cannot tell when a power transformer is faulty, unless it has reached the point where it may be identified by the looks, the smell, or the open circuit condition of a secondary winding.

However, by utilizing the primary winding of the transformer to be tested as a shunt for an A.C. 150-volt meter, as shown in Fig. 3, shorts in the secondary windings are indicated by the drop in the meter readings. These should be checked against readings taken from transformers known to be O.K. A chart should be made up of these readings of the popular makes of radio sets that come into the shop; (the readings between different makes of transformers do not differ very greatly). Shorted turns in the primary windings may also be indicated in this test.

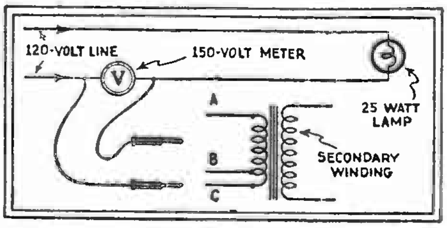

Fig. 3

The following tests and readings, submitted as examples, were made upon a Victor model R-15 power transformer:

	Volts
Voltmeter readings, test prods open.	110
Voltmeter readings, test prods shorted	0
Test prods connected to primary of trans., A to C. No. load	90
Test prods connected to primary of trans., A to B. No. load	86
Test prods connected to primary of trans., B to C. No. load	1
Test prods connected from A to C.	90
Add the following load—dial light.	89
2 power tubes	71
Rectifier	52
4 screen-grid tubes	32
Short rectifier plate to grid	1.5
Short rectifier filament	10.5
Short rectifier filament to plate	70
Short power tube filament	28
Short '24 tube filament	26

Therefore, readings that differ very much from the chart below would indicate that the transformer is not O.K.

	Volts
Victor R-15—Sec. free	90
Load 2 pr. tubes and rect.	52
Crosley 30S-31S-33S-34S—Sec. free	85
Load-rectifier	58
Radiola 41—Sec. free	96
Load-rectifier	62
Atwater Kent 44—Sec. free	78
Load-rectifier	56
Philco 77-77A—Sec. free	84
Load-rectifier—all tubes	30

Analyzer and Tool Kit

And methods for its use to the best advantage in and out of the shop

THE test analyzer described embodies features which have always been desired in any instrument built for service work: (1) low cost: (2) simplicity of design; (3) accuracy of measurements; () ruggedness of the complete unit. It is needless to add that the kit is capable of testing anything from old battery models to the latest screen-grid receivers.

The total cost is extremely low; approximately $25.00, including the carrying case, panel, two Jewell meters, and all other parts. The diagram is of very simple design, toggle switches being used to obtain the various meter readings instead of the usual push-button or bi-polar arrangements. Accuracy was found to be within 1% limits, after competitive tests with commercial instruments had been made.

The carrying case is ideally suited for service use. There are two large compartments for tubes and tools. A dozen tubes may be easily carried in the tube compartment. In the tool drawer may be placed the pliers, screwdrivers, soldering irons, replacement parts, and other usual service aids. The over-all height of the carrying case is 16.5 inches; the width and depth are 12 and 7 inches respectfully. The total weight with all accessories is 18 pounds; the analyzer itself is only 8 pounds.

Finding Resistor Values

Two Jewell meters are used to obtain the necessary test readings. They are an O-1 milliammeter, and a O-3-15-150 triple-range A.C. voltmeter. Since a O-1 milliammeter is used for all direct-current measurements, it is a very simple matter to calculate the resistors necessary to convert the meter into a voltmeter of various readings. It is needful to multiply the full-scale voltage wanted by 1,000, to get the size of the resistor directly in ohms. For example—the resistance necessary for a O-100-volt scale is 100,000 ohms.

Be sure to use accurate resistors, since the accuracy of the meter readings depends upon the resistances. Such resistors are made by various manufacturers and are very easy to procure.

To find the resistance value of the shunts used for the 10- and 100-milliampere scales, it is necessary to know the internal resistance of the milliammeter. In this particular case a Jewell "Pattern 88" was used. The shunts for this meter are 3 1/3 ohms for the 10-mill. scale, and 0.3-ohm for the 100-mill. scale. The internal resistance of the meter is 30 ohms. If other types of milliammeter are used, it is necessary to divide the internal resistance of the meter by the full-current reading desired *less one.* For example: if a Weston No. 301 is used, and the 10-ma. range is wanted, divide the internal resistance of 27 ohms, by 10, (current range desired) less one or 9. The shunt in this case is 3 ohms.

Resistance and Capacity Tests

Resistance and capacity tests are now important features of every testing device. In this analyzer, a 4.5-volt battery, in series with a 4,500-ohm resistor and the milliammeter, is used to test unknown resistances. The same test can be used to test continuity and short circuits. For measuring resistances, the following formula is used:

$Rx + R = E/I$.

E is the battery voltage; I is the current reading obtained when testing; R is the resistance in circuit; and Rx the resistor under test.

Assume a current reading of 0.6 on the milliammeter; this equals .0006-ampere (all values must be expressed in terms of volts, amperes, and ohms). Substituting in the equation given above: we find that Rx plus 4,500 equals 4.5 divided by .0006, which is 7,500. Since Rx plus 4,500 equals 7,500, therefore Rx is 3,000 ohms. The capacity of condensers may be determined from previous calibration. The 120-volt A.C. line, in series with the 150-volt meter and the condenser under test, will give readings depending on the capacity under test. A graph or chart is drawn, after standard condensers have been tested to obtain the readings. Be sure that the line-voltage is always the same when testing; for the readings will vary if the line-voltage is different, and the graph will be of no use.

Having computed the resistances and shunts for the voltage and current scales, we can now proceed with the actual con-

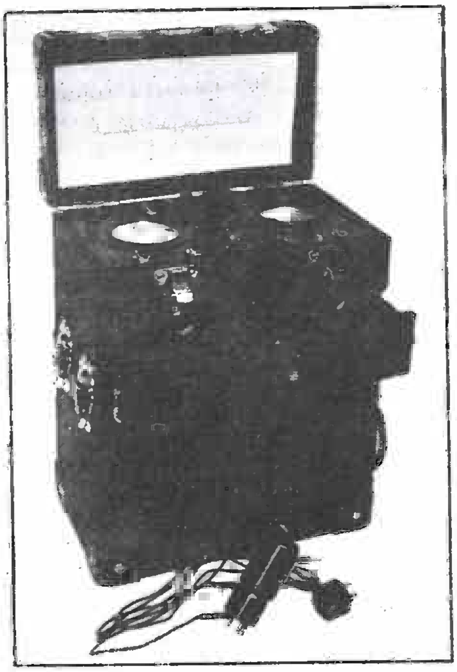

The finished tool kit, with analyzer above, and compartments for tubes and tools.

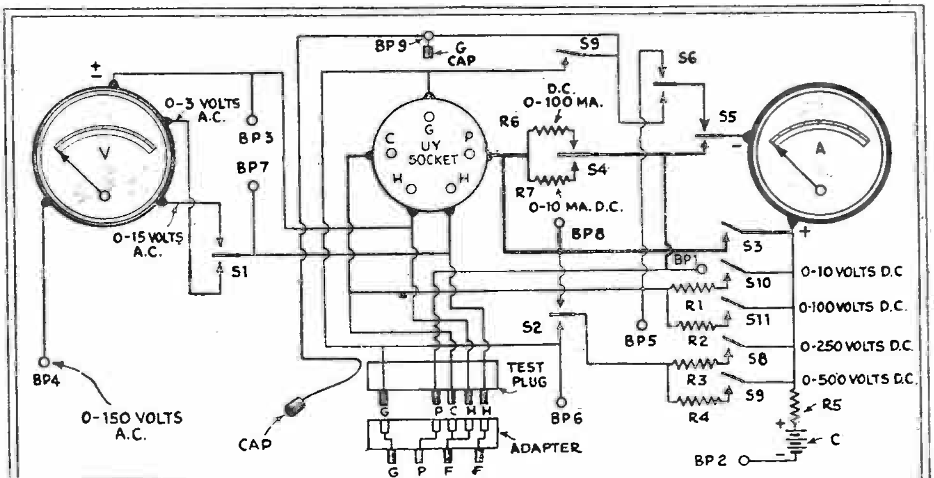

Fig. 1 (above)

The schematic circuit of the analyzer, in which two good meters are used, together with shunts and series resistors which make possible a very wide range of tests on tubes and circuits.

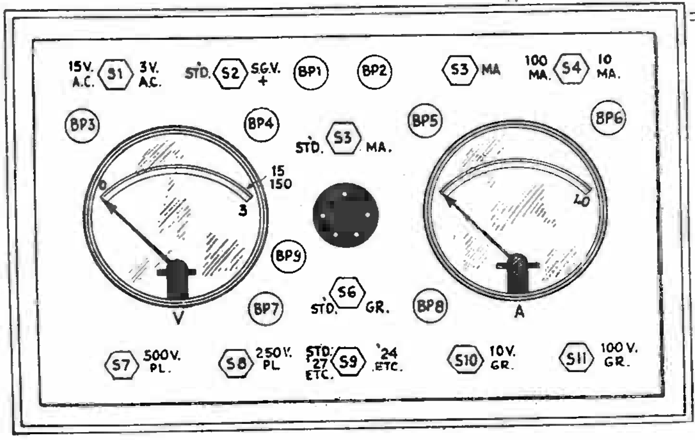

Fig. 2 (left)

The appearance of the panel, showing the relative positions of the meters, socket, toggle switches and binding posts. With a little practice, readings can be taken very rapidly.

struction of the tester. A complete schematic drawing (Fig. 1) and panel layout (Fig. 2) are given. Of particular importance are the exact locations of the toggle switches, which will be described at greater length. The following parts are needed to construct the analyzer: carrying case; panel; 0-1 D.C. milliammeter A; 0-3-15-150 A.C. triple-range voltmeter V; six toggle switches; five S.P. D.T. three-contact toggle switches; necessary resistors (see diagram); a UY socket; UX and UY adapters; ten feet of 6-wire cable; a test plug composed of holder and UY tube base; nine binding posts, test leads, hardware, hookup wire, etc.

As stated before, the toggle switches are the heart of the circuit. Close observance must be given to the panel layout and the schematic diagram, in order to wire the switches in their proper terminals and positions. When all toggle switches are thrown to the left, all the meters are in the "off" or standard position; this is indicated in the diagram as the top position. Throwing the toggles to the right, and in certain combinations with each other, produces the proper circuit connections. When they are thrown in the proper sequence, it is possible to obtain the desired readings.

For example, we wish to test a socket using a '27 tube; for filament voltage, we throw S-1 to the right (that is, the 3-volt meter tap). For plate current indication, we throw S-5 to the right, and then S-4 to the left for the 100-mill. scale, and close S-3. If the tube draws less than 10 mills., then S-4 may be thrown to the right side.

For all plate-current readings, be certain that S-5 is thrown first; for otherwise the full plate voltage will be impressed on the milliammeter and the meter may be seriously damaged. Before making other grid or plate voltage tests, return switches S-3 and S-5 to the left or standard positions; being careful that S-3 is returned first.

To obtain grid-voltage readings, move S-6 to the right; then use S-10 for the 10-volt range or S-11 for 100-volt scale. As cautioned before, return all switches to the "off" position before proceeding with further tests.

For plate- voltage readings, throw either S-8 or S-7; choice depending on whether the 250- or the 500-volt scale, respectively, is required.

For screen-grid voltage tests, throw S-2 to the right and use the plate-voltage switch S-8 for indication. Before inserting a screen-grid tube, open S-9, so that the control grid will not be shorted to the screen-grid.

For continuity and resistance tests, test leads are connected to BP-2 and BP-5. For external milliammeter connections, use BP-1 and BP-8, throwing the milliammeter switches as previously described. In fact, for all external measurements the proper toggles must be put in the correct positions before tests can be made.

External voltage measurements can be made by using BP-5 and BP 6, with grid switch thrown, for 10 and 100 volts. For 250 and 500 volts, throw plate switches, and connect to BP-5 and BP-8. The binding posts for 3 or 15 volts A.C. are BP-3 and BP-7. The A.C. line voltage can be tested by terminals BP-3 and BP-4 which are connected to the 150 A.C. volt range. A flexible wire, with a control-grid cap connector is attached at BP-9, when testing with 224 or 222 tubes.

Remember to throw all switches back to the "off" position before making other tests; and you need not fear burning out the meter. The switch arrangements are only a matter of practice and are soon performed automatically.

The authors have constructed several of these instruments which are now in service, and performing in a very satisfactory manner. Service Men who construct this analyzer will be well pleased with the results.

The values of the parts indicated in Fig. 1 are: R1, 10,000 ohms; R2, 100,000 ohms; R3, 250,000 ohms; R4, 500,000 ohms; R5, 4,500 ohms; R6, shunt for 100-ma. scale (see text) 0.3-ohm; R7, shunt for 10-ma. 3 1/3 ohms; the arrangement of the switches listed is obvious.

The leads represented by the bold black lines in the diagram, which carry heavier current, should be of No. 14, or larger wire.

A PENTODE TESTING ADAPTER

BECAUSE of its unusual switching facilities, the Supreme "Model 90" set analyzer will handle the pentode tubes without adapters. But, since all readings are taken from the cathode prong, you must read the cathode (space-charge) voltage first; then, to get the plate voltage, you must add the space-charge voltage to the plate-voltage reading, to get the true value. Also, you must subtract the space-charge voltage reading from the grid-bias reading to get the true grid bias. Then, too, you must be careful to have the "UX-Heater" toggle switch on the "Heater" position (right), to avoid shorting out the high space-charge potential.

The "Model 90" has a circuit, made for the R. F. pentode, with a connection coming out on the analyzer plug, and a pin jack on the analyzer. There are two push buttons, for reading the space-charge voltage, and the space-charge current. By means of two simple adapters the space-charge grid of the output pentode is brought out to this circuit. The space-charge voltage is then read by the "Sp. Ch. Voltage" button (upper left), and the space-charge current by the "Sp. Ch. Current" button (upper right). You could not read the space-charge current in the other way.

One adapter consists (A) of a five-prong plug with a UX socket, which receives the regular analyzer plug. The cathode prong of the socket is brought out on the side to a small bolt which goes to the pentode connection on the analyzer plug.

The other adapter (B) consists of a UX plug with a five-prong socket, the cathode contact of which is brought out in the some way as the other; connection, on the side of the adapter, ending in a pin to be plugged into the "Sp. Ch. Grid" pin jack. The pentode tube fits into the five-prong socket of this adapter.

The readings are taken by depressing the "Sp. Ch. Voltage" and "Sp. Ch. Current" buttons, with the scale selector set at the correct scale. There is no danger of shorting out the space-charge potential. These adapters were made from UX and UY tube bases and UX and UY subpanel sockets.

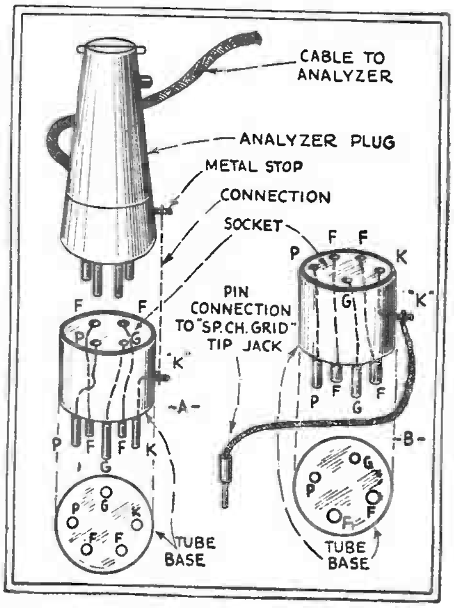

SHOCKPROOF ANALYZER CASE

ON several occasions, while about to test tubes or radio set in a customer's home, I have noted that the analyser had one or more circuits "on the bum." After taking it apart, I found the wire connections becoming loose. This happened several times, and I was unable to account for it. Recently, the needle shaft jumped off the pivot of one of the meters. I knew then what had caused all my past troubles; the jarring and banging of the service car was the cause.

I eliminated this annoyance by building a felt-lined box in which to keep the meter. The box was made two inches larger on each side than the outside dimensions of the analyser. Thick, heavy felt was then nailed to the inside walls of the box, in which the meter was then carried to and fro—and the annoyance ceased.

The box may be fastened in the service car or truck. A top with a lock may be used to prevent theft.

DEMAGNETIZING THE WATCH

MAGNETIZATION of watches by a dynamic speaker's field coil, recalls some interesting experiences. Bi-polar D.C. motors and generators, of the old type, and the induction type alternator were the cause of many watches being magnetized.

To demagnetize your watch, tie a string to the ring of the watch and twist the string until it is linked. Suspend the watch by the string and let it revolve near a strong magnet. While it is still revolving, move the watch out of the magnetic field. It will be found that the watch is demagnetized. Of course, holding the watch in an A.C. field is the better way.

How to Test the Pentodes

Methods of adapting standard analyzers and tube checkers to the new tubes

THE advent of the "Pentode" tube has made most testing equipment obsolete; only one model set analyzer incorporates facilities for testing pentode circuits without adapters or wiring changes. However, any set analyzer or tube tester may be brought up to date by the use of adapters or by making circuit changes.

Since various models are wired differently, a different adapter is required for each type of tester; although all circuits can be arranged to test the pentode tube by making the same wiring changes if permanent connections are wanted.

The reason adapters or wiring changes are necessary to test pentode circuits is that the elements of the tube are connected to the tube-base prongs in a way differing from standard practice. Fig. 1 shows the connections of a '27-type tube to its five-prong or UY tube base; proper identification is made when the prongs of the tube are pointing towards you. Fig. 2 shows the arrangement of the tube prongs on a '47 pentode's base, also with prongs pointing towards you.

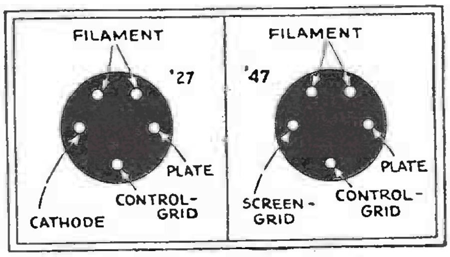

Fig. 1 Fig. 2

The arrangement of the UY base of the '27 is shown at the left; connections to '47 and '33 bases at the right.

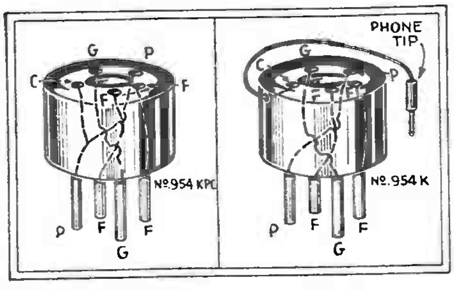

Fig. 3 Fig. 9

Left, adapter for direct readings with Jewell tube checkers; right, adapter for Sterling set testers.

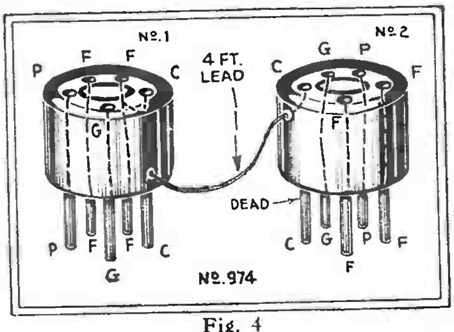

Fig. 4

The twin-adapter shown, used with any Jewell analyzer, makes screen-grid voltage measurements with the aid of the external test leads.

Notice that the "K" or cathode prong now becomes the screen-grid prong; while the control-grid connection continues as such. From the former fact, you can see that the regular tester circuit does not include meter ranges, connected properly to the grid and cathode circuits, to test voltages applied to these circuits of a pentode tube. (For characteristics of the pentode tubes see pages 229 and 230.)

A meter range of at least 250 volts is required for the screen-grid circuit, and one of at least 17 to 20 volts for the control-grid circuit. At times it is desirable to measure the screen-grid current; and connections must be provided to connect the milliammeter of the test instrument in series with the screen-grid circuit. (The cathode grid is connected internally to the heater or filament circuit, and therefore no measurements are required for it.)

Testing Pentodes

In order to test pentodes on the Jewell "209" and "210" tube checkers, a five-hole four-prong adapter is required, Fig. 3. This is commercially available as Na-Ald "Type 954 KPC." Insert the adapter into the four-prong socket on the tester, and place the pentode in the adapter. The "emission current" can now be read on the milliammeter of the tester. This adapter ties the screen-grid to the plate when testing the pentode.

At the time of this writing, the normal values of the pentodes announced by the different tube manufacturers were not available to the writer; but it is suggested that a good pentode tube, known to be in good working order, be tested and the value obtained will serve as a standard when testing a tube of doubtful condition.

The "954KPC" adapter can be used also in conjunction with the "Dayrad" and "Sterling" tube testers; all that is necessary is to insert the adapter into the regular four-prong socket, and insert the tube in the adapter. Set the filament voltage at 2.5. Emission current will now be indicated on the tester meter.

In order to test pentode tube circuits with the Jewell analyzers, it is necessary to use a twin adapter, (Fig. 4) available as Na-Ald "Type 974." These two adapters are connected together by means of a single four-foot lead of insulated wire between the cathode prong of adapter No. 1 and the cathode receptacle of adapter No. 2.

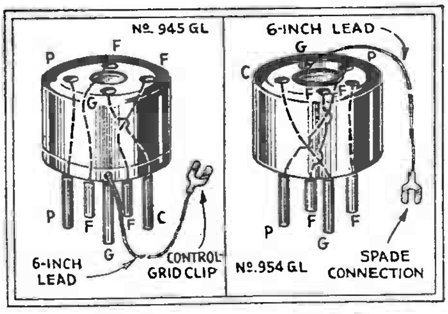

Fig. 5 Fig. 6

The pair of adapters shown are required for pentode measurements on Weston set testers.

Because of the internal connection of the Jewell analyzers, no screen-grid measurements can be made with this set of adapters. This does not prevent the measurement from being made, however; for the screen-grid voltage can be measured by means of the external binding posts of the analyzer. Be sure to use the proper voltage scale for the screen-grid; the usual applied potential is 250 volts.

When making the screen-grid voltage test, remove the test plug from the set socket. Place one test lead in the so-called cathode receptacle of a five-prong socket, and the other test lead in the adjacent heater receptacle. The plate and screen-grid circuits will have the same value of voltage; and, as these terminals are opposite on a five-prong socket, make sure you have connected to the screen-grid receptacle of the socket. All other measurements are made in the usual way, using the twin adapters, of course. The above connections apply to any Jewell analyzer, which includes facilities for testing the 22 and 24 type screen-grid tubes.

To test pentode tube circuits with the Weston "547," "565" and "566" set testers, the Na-Ald "Type 945GL" and "954GL" adapters are required (See Figs. 5 and 6). The "954GL" is inserted in the UX socket of the tester, and the lead brought out from the grid receptacle of the adapter connected to the grid terminal, on the side of the test panel of the tester.

The "945GL" four-hole five-prong adapter is attached to the test plug, and the lead brought out from the grid prong is attached to the grid terminal, on the side of the test plug.

The test plug is now inserted in the tube socket, and the tube is placed in the socket on the test panel. The positions for the rotary switches on the testers are as follows:

Model of Tester

Pentode	"547"	"565"	"566"
Plate voltage	B-250	B-250	B-250
Sq. voltage.	C-250+	Sq-250	C-250
Control grid V....	Off scale	Contr. G-100	Contr. G-100
Filament V.	AC4	AC4	AC4
Plate current	Toggle Sw. 100	Toggle Sw. 100	PL. MA. 100
Sq. current..	Rect. 100	SG-25	SG-25

When testing the pentode tube on the "533" or "555" tube checker, or the "565" used as a tube checker, place a Na-Ald adapter "Type 975," (Fig. 7) in the UY socket, and the tube in the adapter. Set the filament voltage at 2.5. Use the high range of the milliammeter but read on the 0-20 scale.

The Na-Ald "975" adapter can also be used on the "Supreme" tube testers. Place the adapter in the five-hole or '27 socket. Set the filament switch at 2.5 volts, if a switch is provided for that purpose. If you are using a "Supreme" tester, insert the pentode tube into the adapter, in the

'27 socket; emission current can now be read on the test meter. This adapter simply allows the screen-grid to be connected to the plate of tube.

Two adapters are required when using the Hickok "S-G 4600" tester. These adapters (Na-Ald "975H") are furnished in pairs connected together by an eight-inch lead (Fig. 8).

When making radio set measurements, first use the regular No. 1 cable for connecting to the receiver under test. Set the filament-cathode switch to "Neg. Fil." position, and the plate milliammeter to read on the "high" scale. Next, insert the pentode tube in the '27 socket. Turn on the receiver; the plate voltage and current of the tube will now be indicated in the regular manner.

To test screen-grid voltage and screen-grid current, after making the above test, turn off the receiver switch and use the "975H" adapters as follows:

Insert one adapter into the socket marked "connector" on tester panel; the other adapter into the '27 socket. Next, insert the plug at the end of cable No. 1 into the adapter, which you have connected in the "connector" socket of the test panel; and the pentode into the adapter which you have connected to the '27 socket. Set the milliammeter on the "low" scale; the screen-grid voltage will now be indicated on the plate voltmeter and the screen-grid current on the plate milliammeter, after the switch of the receiver has been turned on.

To test the pentode with Sterling set testers, use a Na-Ald "954K" adapter. This is inserted in the four-hole socket of the tester; a lead is brought out from the cathode receptacle, and the cathode prong is dead. (Exact instructions on how to use this adapter were not available at this writing; however, by the time this is printed they will be available from the manufacturer.) Fig. 9 shows the connection for this adapter.

Two adapters are required in testing pentode tube circuits on the Supreme 400 series of testers. Different connections for the adapters are required for each type, and as there are seven or eight different models of the "400 series" testers involved, complete information on the exact way to use these adapters was not obtainable at this writing.

Na-Ald "No. 976" and "No. 977" adapters are required. The "976" is a five-hole five-prong adapter. Refer to Fig. 10 for the connections, which are made from the socket of the adapter to the prongs of the adapter in the following order: plate to plate; heater to heater; grid to grid. The cathode prong is dead; while the cathode receptacle is connected to an eight-inch black wire with phone tip attached. This adapter is to be placed in the socket of the tester.

The "No. 977" adapter, to be attached to the test plug, is of the four-hole-five-prong variety. Refer to Fig. 11 for the connections, which are in the following order: plate to plate; grid to grid; and the plus side of the filament receptacle to the plus side of the filament prong. The negative filament prong of the adapter is connected to the center stud which, when attached to the test plug, makes contact with the latch on the plug. The cathode prong of the adapter is connected to a spade terminal, as indicated.

Information on the use of these adapters for the full line of Supreme testers will be available, by the time this is printed, from the Supreme Instrument Corp., Greenwood, Miss., or from the manufacturers of the adapters, the Alden Mfg. Co., 715 Center St., Brockton, Mass.

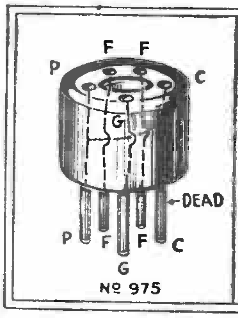

Fig. 7 (left)

Adapter used with Weston models "533," "555" and "565."

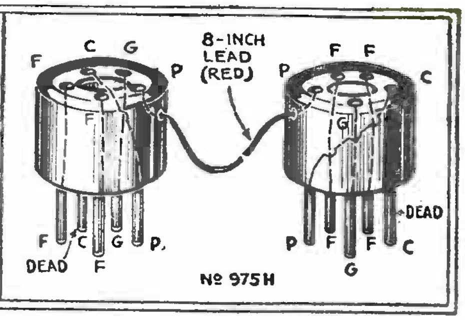

Fig. 8 (right)

Dual adapter used with the Hickok "S-G 4600" set tester for pentodes. The method is explained in the text.

Tests on Variable Mu Tubes

The 35 and 51 type variable-mu tubes present no additional testing problems, provided the control grid measuring facilities of the tester include a meter scale of at least 40 volts (negative). Most testers have a sufficient range for this purpose. The variable-mu tube will probably have a control-grid potential of as much as 40 volts negative at certain settings of the receiver's volume control, and, if the tester does not provide a meter of sufficient range, properly connected to measure this control-grid voltage, the control-grid circuit should be connected to an external meter range that will accommodate the applied voltage.

The adapters listed in this article make it possible to test the tubes and the tube circuits of the following pentode types: the '33, '38 and '47.

The '35, '36 and '51 type tubes are only special types of screen grid tubes; and the usual screen grid measuring methods may be followed when testing them; for their electrode connections are such that no change in tester design is necessary.

Auxiliary Pentode Tester

Fig. 12 shows the necessary connections. Socket No. 1 is the regular five hole socket of the tester; socket No. 2 is for a pentode Na-Ald "Type 427" or "465." Switches S1 and S2 are of the push-button type (such as Yaxley "No. 2004") which allow the proper meter scales to be read in reference to the control-grid and screen-grid circuits of the pentode. Switch S3 may be of the push-button, or a toggle type like the Na-Ald "2P2T". It is a double-pole double-throw unit, which breaks the grid and cathode leads of the test plug; connecting them to the control-grid and screen-grid of the pentode test socket.

Lead "A" connects to the negative terminal of any D.C. voltmeter having a scale exceeding 20 volts; and "B" connects to its positive terminal. Lead "C" connects to the negative side of a D.C. voltmeter, reading to 250 volts; and "D" connects to the positive terminal.

It is not advisable to attempt to add switches to connect the milliammeter in series with the screen-grid circuit, to measure screen-grid current. This measurement is rarely essential; and, when it is necessary, the external connections of the meter can be used.

If this external pentode test circuit is constructed, no switches except S1, S2 and S3 should be touched while testing the control-grid and screen-grid circuits; after which throw S3 to the original position, and make the plate and filament tests in the usual way.

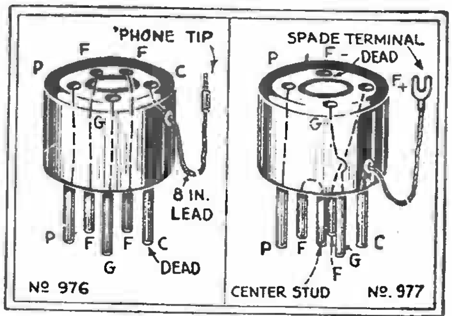

Fig. 10 **Fig. 11**

The two adapters shown are used with the "400" series of Supreme test instruments; one with the socket and one with the plug.

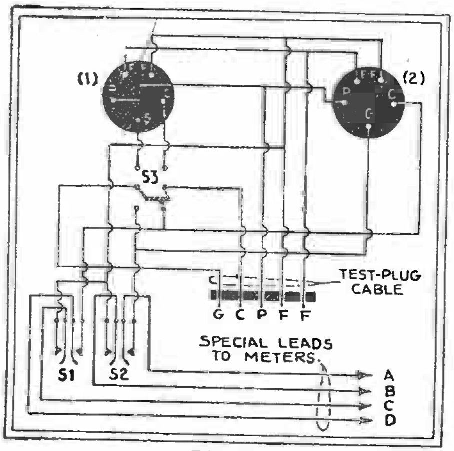

Fig. 12

Connections of an auxiliary unit for testing pentodes with any tester having a cathode circuit independent of the filament.

A NOVEL HOWL-ARRESTER

NOT being able to obtain a howl-arrester when needed, the writer improvised the one shown

It was made by cutting off the lower half of a hydrometer bulb, as indicated by the dotted lines. The upper part then just slipped over the microphonic tube.

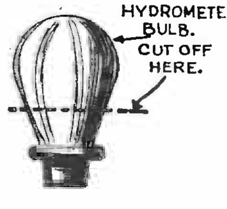

How to Use a Set Analyzer

A discussion of analyzer theory and operation which starts from the very depths of receiver-voltage measurements and shows the reader the "how" and "why" of analyzer operation.

THE purpose of this article is to inform the Service Man of the correct procedure in the use of a modern set analyzer; and how to interpret its meter readings in the terms of normal or abnormal receiver operation. Provided these simple instructions are followed, anyone with a fundamental knowledge of vacuum tube circuits can intelligently service the modern broadcast receiver with a minimum amount of time and labor.

Type of Instruments Required

First we shall describe the two meters around which is built the Jewell Model 444 set analyzer that has been selected as an example of good instrument design.

The meter on the left, Fig. A, is of the A.C. type, having scales for both current and voltage. The range in amperes is 0-4 and 0-8, the milliampere range being 0-20 and 0-100. The A.C. voltage scale is 0-4, 0-8, 0-160 and 0-800. The instrument on the right is a combination volt and milliammeter for D.C. voltages and currents and in addition has three calibrated ohmmeter scales, with ranges of 0-1,000, 0-10,000 and 0-100,000 ohms. A 4.5 V. flashlight battery provides voltage for the ohmmeter and for tube testing. Every instrument scale is available at the indented jacks along the rear edge of the panel.

Many Service Men make measurements with a set analyzer *but do not know what these measurements mean*, or how the instruments are connected to the circuits under test, and therefore cannot visualize the conditions in the circuits.

The successful interpretation of set analyzer readings depends upon a knowledge of the fundamental connections shown in Figs. 1A to F. It makes no difference how the tester is *mechanically* arranged,—if it is correctly designed it will always *electrically* connect instruments to a circuit as shown in these figures.

Rule Number One

The common reference point for all the voltages (except cathode and filament) *in a vacuum tube circuit* (measured at the tube socket) *is its filament or cathode.* That is, if the tube is of the "*indirect heater*" type, such as the '24, '27, '35, or '51, *the cathode* is the high-voltage negative; and if it is of the "*direct* heater" type, such as the '01A, '12A, '71A, '45, '47, or '50, the negative side of the filament is the high-voltage negative.

Therefore, high-voltage negative of a particular tube is always taken as a reference point with respect to any other part of the circuit of that tube. Consequently, if we say a certain tube has a plate potential of 250 volts, a control-grid potential of 16.5 volts, or a screen-grid potential of 250 volts, we really mean with respect to its cathode or filament.

(Note that the terms "'B' negative" and "'B' positive" should not be applied to the current *source*—ordinarily, a power pack—but only in connection with the plate-circuit return [for minus, and the plate, for positive] connection of a tube. Such careless use of the term "'B' negative" and "'B' positive" has resulted in much misunderstanding. The *power pack* terminals are correctly designated *only* as positive or negative; that is, without any mention of the letter "B." Battery manufacturers, through battery markings, have contributed their share to the confusion. *Technical Editor.*)

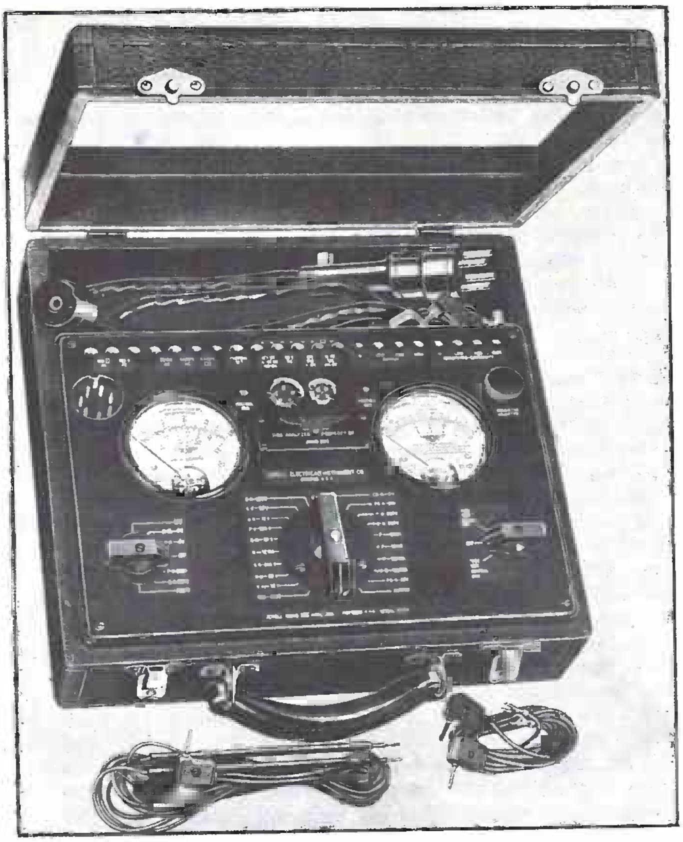

Fig. A
A Jewell analyzer employing the principles discussed in this article.

The cathode potential is a figure obtainable only in tubes of the indirect-heater type, and is the voltage measured between the cathode (emitter) and its heater-filament. The cathode may be positive in polarity and the filament negative, or vice versa, depending upon the circuit arrangement.

The filament voltage is not measured with respect to the high-voltage negative, but is simply the voltage drop across the filament. The filament current *source* may be a battery or, (in the case of an A.C. receiver), the secondary of a step-down transformer.

From a consideration of these fundamentals we may conclude that if the negative end of the high-voltage circuit becomes open, shorted or incorrectly grounded, the measurements obtained will be inaccurate; but of this, more anon.

Filament Voltage

Consider Fig. 1A which represents a set analyzer voltmeter connection for the measurement of filament voltage. What conditions could exist if "low," or "no voltage," is indicated on the meter, V? (We assume voltage is applied to the primary of the transformer, which is not shown.)

If there is no secondary voltage, the transformer filament winding is almost invariably open; a continuity test will give an immediate check on this. If the voltage is low, the complete circuit may be shorted or grounded, (the ground may be to the core of the transformer, or to the chassis of the receiver); a continuity test between filament and core or chassis will establish where the ground exists.

If the filament voltage is high, the secondary winding may be shorted to another secondary or to the primary, or the

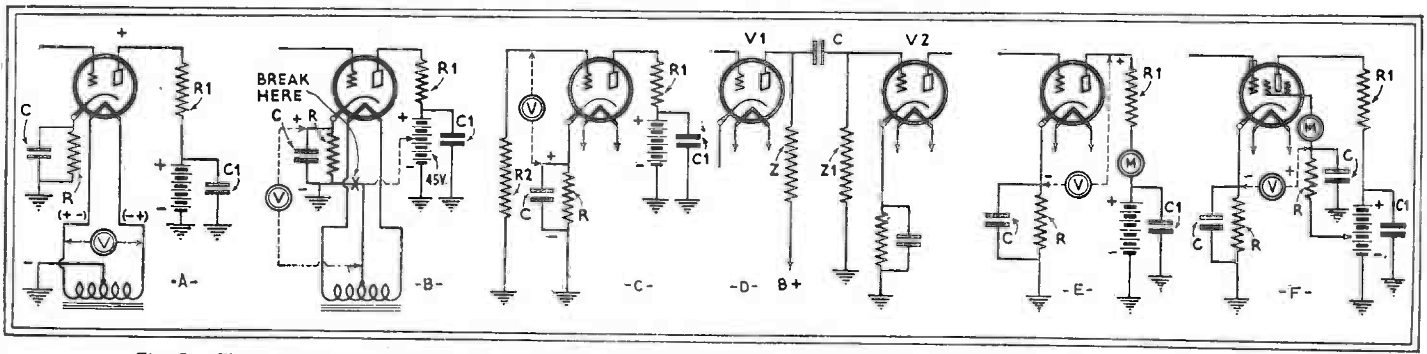

Fig. 1. The points between which the terminals of a Voltmeter should be connected for measurement work is shown in the above sketches. The connection of the milliammeter for plate and screen-grid current readings are shown in E and F respectively.

line voltage may be high make a continuity test for shorts or grounds, and use the A.C. voltmeter to check the line voltage. Watch out for shorted primary turns, which also will cause a high filament secondary voltage.

Cathode Voltage

In Fig. 1B we have the connection for the measurement of "cathode" voltage; that is, the cathode-to-filament potential as indicated on meter V. In this circuit, what condition could cause a low, high, or no-voltage reading on meter V?

Consider low voltage first. Since the cathode voltage in this instance depends on the plate current flowing through the tube, a low cathode voltage will be indicated if the plate current is low (due perhaps to low plate voltage, or a weak tube).

An indication of "no voltage" between cathode and filament (which in this example is shown grounded at the center-tap of the filament voltage secondary winding) will be obtained if the condenser C is shorted, since the bias resistor R is then shorted out of the circuit, which results in no voltage drop across R and therefore no cathode voltage.

High cathode voltage, positive in polarity, may be caused by a short to the "B+" circuit, or to one of the tube elements; either will result in a high plate current and, in turn, a large voltage drop across R. Lack of cathode voltage may be caused by an absence of plate voltage, open plate circuit, shorted condenser "C," or open cathode circuit.

The dotted lines in Fig. 1B show how a positive voltage might be placed on the heater to cause the cathode to be negative. Should this be the case the center-tap of the heater, as indicated by X, will not be grounded.

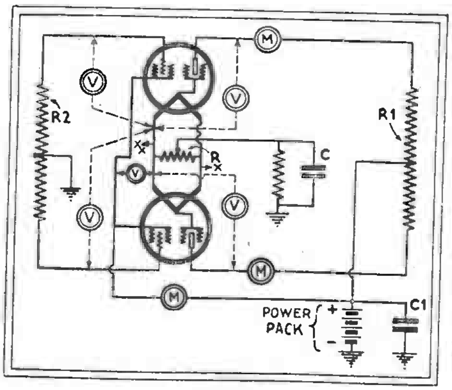

Fig. 2
Measurements in a push-pull stage.

It is interesting to note that the control-grid and cathode voltages *ordinarily* are the same unless, as in the instance illustrated in Fig. 1B, the cathode is given a negative (or positive) voltage by placing a positive (or negative) charge on the heater. Also, if a positive charge of greater value than the voltage drop across R is placed on the heater, then the cathode voltage will be negative, the exact value being the difference between the voltage drop across R and the voltage applied to the heater. Few sets, however, employ a negative cathode voltage and in most cases the applied cathode voltage will be equal to the effective grid voltage.

In Figs. 1A to 1F, you will note that resistors R1 and R2 are placed in the plate and grid circuits, respectively, to represent the load. Actually these may be coils, transformers, chokes or any other form of impedance; in any case, the same principles apply. The battery represents the high-voltage supply while the plate bypass condenser C1 may represent either the filter condenser system in the power pack, or one of the regular plate-circuit bypass condensers.

Control-Grid Voltage

Now refer to Fig. 1C which shows the voltmeter connection for determining control-grid voltage. In this measurement, the polarity of the voltmeter is reversed within the set analyzer so that the plus end of the meter is connected to the cathode, and the negative end to the grid. What conditions in this circuit will cause abnormal measurements provided we have plate current?

Suppose the circuit were normal and the resistance R2 in the control-grid circuit was a 500,000 ohm grid leak in a resistance-coupled amplifier. Would our voltmeter at V indicate exact control-grid voltage? *No, not at all*, since in the grid circuit, there is a 500,000 ohm resistance (R2) which is in series with the voltmeter.

Now, in order to get a voltage indication on a voltmeter, current must flow in the circuit; and when the voltmeter is connected between the control-grid and cathode, the only current flowing in the circuit is that taken by the instrument. The voltage drop across the bias resistor is never high enough to drive through the circuit a current of sufficient magnitude to move the moving element, and thus the needle of the voltmeter. Therefore, due to this high resistance in the circuit, the *indicated* voltage (on the voltmeter) will be much lower than the true or *effective* voltage.

The correct way to get the *effective control-grid voltage* would be to short the grid load resistor; or to make a measurement of the cathode voltage (which in most cases equals the control-grid voltage). If the bias resistor R becomes open and a control-grid voltage measurement is attempted with the set analyzer, a high control-grid voltage will cause a correspondingly low plate current. The reason for this is that the instrument itself takes the place of the bias resistor, the high voltage drop occurring across the instrument due to its high resistance. When this condition is noted with a set analyzer always check the bias resistor with the continuity tester; since a condition of high plate current and no grid bias usually indicates a shorted bias resistor bypass condenser C.

If the control-grid circuit becomes open at any point, control-grid voltage will not be indicated on the voltmeter. Likewise, if the primary of the coupling unit in the preceding stage becomes shorted to the secondary or control-grid circuit, a *positive* bias will be placed on the control-grid of the tube. This will show on the set analyzer as a high plate current; also, the normal control-grid voltage reading will not be evident but the meter will be reading in the reverse direction. This condition is sometimes found in resistance or impedance-coupled stages, due to a leaky or shorted coupling condenser.

Consider Fig. 1D, which represents a stage of resistance coupling (a form found in many makes of early screen-grid sets, particularly the Atwater Kent; impedance coupling is utilized in the R.F. stages). If condenser C, which couples the plate and control-grid circuits, breaks down under voltage, the control-grid of the following tube, V2, becomes positive and if Z1 is a resistor. it will probably change resistance value or burn out, as it is normally a grid-leak type of unit with negligible current-carrying capacity. Accordingly it is often necessary not only to replace C but also, in a good many cases. unit Z1.

Fig. 1E shows the analyzer meter connections for plate voltage and plate current measurements. Always make plate *voltage* measurements *first,* to prevent shorted tube elements, and the resulting high plate current, causing an overload of the milliammeter.

If a low plate voltage (not in a resistance-coupled stage) is to be measured, remove the tube from the tester. If the plate voltage now rises. the tube has shorted elements and a new tube should be used. Note that the milliammeter MA (and its shunt resistances) is in series with the circuit and the current that flows through the circuit must also flow through it: therefore, do not switch to the milliammeter until plate voltage has been measured.

Whenever you have occasion to measure *current,* always use the highest range of the milliammeter as an added protection to the instrument. Then, if relatively normal current is indicated. use its next lowest range.

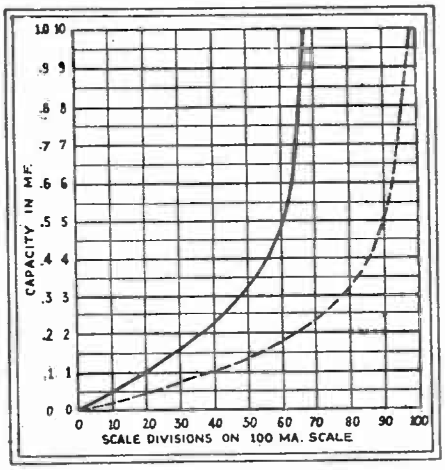

This instrument may also be used as a capacity meter. The solid line corresponds to the low range, and the dotted line to the high range.

Screen-Grid Voltage

The same routine circuit tests described in connection with the plate circuit are followed to determine screen-grid voltage. Fig. 1F shows how in the Jewell 444 a voltmeter and milliammeter are connected to a screen-grid circuit. Screen-grid current usually is low, although what has been said about the voltage and current measurements of the plate circuit applies also to the screen-grid circuit. A grounded or shorted screen-grid circuit always results in a high current; normally, the screen-grid current does not exceed 1/3 of the plate current.

Control-Grid and Pentode Circuits

Figure 2 represents the connections in a push-pull stage using pentode tubes. We have placed meters in all of the circuits just as the Jewell 444 would connect them. Note that one element of the tubes, the suppressor grid, is connected *within the tubes* to the center of each filament; consequently, we can make no measurements on this element.

You will remember that we pointed out just how the screen-grid voltage affected the measurements in other circuits. Likewise, if there is no cathode voltage there will in all probability be no control-grid or plate voltage.

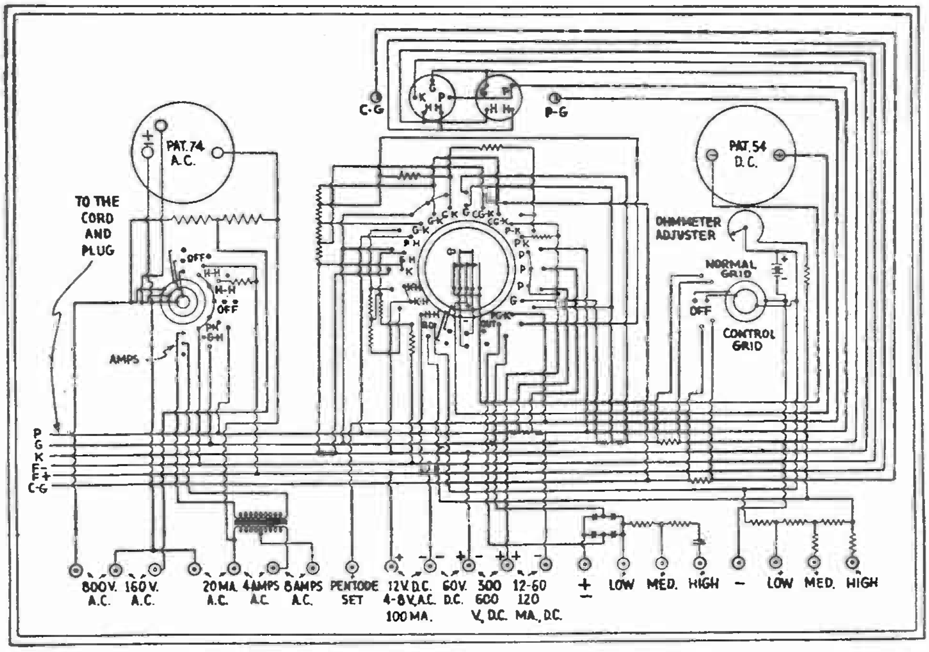

Complete schematic circuit of the Jewell 444 set analyzer. The numbers on the rotary switch correspond to those discussed by the author. In reality, they refer to those circuits in which the meter is connected for a given measurement; for instance, with the switch set on the "G-K" terminal, the meter is connected between the grid and cathode of the tube. The three "G-K" points correspond to three different scales on the meter.

Part II

To enable you to understand how meters are connected to the circuits of four- and five-prong tubes in the Jewell 444, see Fig. 3, which shows the terminal designations for a four- and five-hole socket. The grid is indicated as "G," the plate as "P," the filament as "H" for negative and "H1" for positive, and the cathode as "K." These terminal designations are followed throughout in this analyzer.

The master selector switch is arranged for these designations, therefore, if you will keep these letters in mind you will always know how the meter is connected to the circuits.

Master Selector Switch

There are twenty-two positions for the master selector switch including the "off" position. Counting from left to right beginning at the bottom, the first position is marked "R-C" meaning Resistance-Continuity (the function of this will be described later); No. 2 is "H-H-12V," signifying that the D.C. voltmeter is connected across the filament circuit using the 12-volt scale; No. 3 is "K-H-60V" meaning that the voltmeter is connected between cathode and heater using the 60-volt scale; No. 4 is "K-H-300V." meaning the voltmeter is between heater and cathode using the 300-volt scale; No. 5 is "K-12 MA." meaning the milliammeter is in series with the cathode circuit using the 12-ma. scale; No. 6 is "G-H-30V." meaning the voltmeter is between grid and filament using the 30-volt scale; No. 7 is "P-H-300V." meaning the 300-volt scale is between plate and filament; No. 8 is "G-K-12V." meaning the 12-volt scale is between grid and cathode; No. 9 is "G-K-60V." connected as No. 8 except that the 60-volt scale is used; No. 10 is "G-K-120V." and is the same as Nos. 8 and 9 using the 120-volt scale; No. 11 is "G-12 MA meaning the 12-ma. scale is in series with the grid circuit; No. 12 is "CG-K-6V" meaning the 12-volt scale is be-

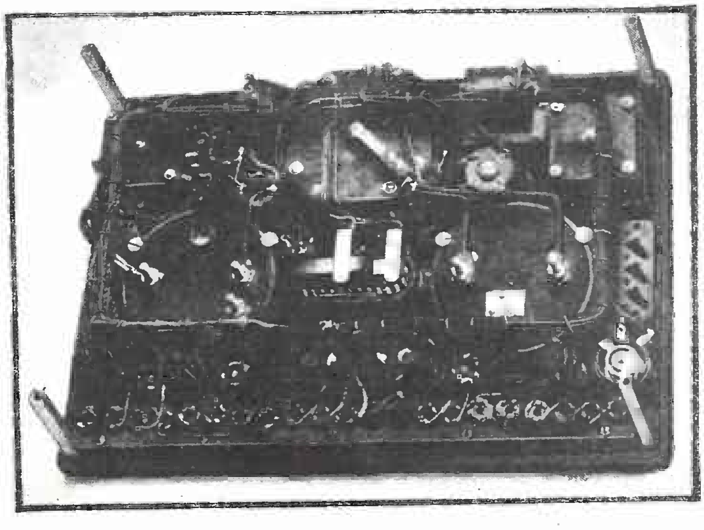

Photograph of the internal wiring of the Jewell 444 analyzer.

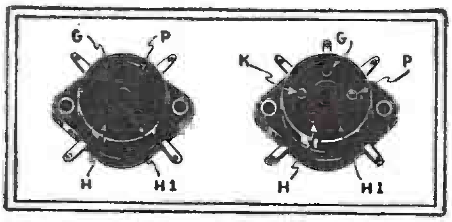

Fig. 3

tween control grid and cathode of screen-grid tubes; No. 13 is "CG-K60V." and is the same as No. 12 but using the 60-volt scale; No. 14 is "P-K-300V." meaning the 300-volt scale is connected between plate and cathode; No. 15 is "P-K600V." and is the same as No. 14 using the 600-volt scale; No. 16 is "P-12MA." meaning the 12-ma. range is in series with the plate circuit, No. 17 is "P-60-MA." and is the same as No. 16 using the 60-ma. scale; No. 18 is "P-120-MA." and is the same as No. 16 and 17 using the 120-ma scale; No. 19 is "G-120-MA." meaning the 120-ma. scale is in series with the grid circuit; No. 20 is "PG-K30V." meaning the voltmeter is between the "pentode grid" and cathode of an R.F. "pentode tube." This "pentode grid" is the one on the side of the base of an R.F. pentode tube. The 30-volt scale is used. The "P" in this case should not be confused with the "P" position on other positions of the switch which refer to plate connections. No. 21 is "Output" and the range covered is determined by the external connection to the output jacks. These are marked—Low—Med. and High. This scale is used as a visual indicator of resonance in connection with an oscillator. Directions for the use of this scale will be given later. No. 22 is not marked and represents the "off" position of the D.C. meter.

A.C. Selector Switch

The A.C. meter is controlled by the smaller selector switch to the left. It has seven positions. Two of these are marked "off." Counting from the top, No. 1 is the "off" position, No. 2 is marked H-H1-4V meaning the A.C. voltmeter is connected across the filament circuit using the 4-volt scale. No. 3 is H-H1-8V meaning the 8-volt scale is connected across the filament circuit. No. 4 is the other "off" position and this "off" position separates the low-voltage scales from the high. No. 5 is "P-H800V." and means the 800-volt scale is connected from plate to filament. This refers to rectifier tubes and measures directly the A.C. voltage applied to one plate of an '80 rectifier or to the plate of an '81 rectifier. No. 6 is "G-H-800V." and measures the A.C. voltage applied to the second plate of the '80 rectifier. No. 7 is marked and connects the current range of the A.C. meter to the proper small jacks at the rear of the panel.

Automatic Switch for Tube Tests

The small selector switch to the right is for testing tubes. It is automatic and springs back into the "off" position when released. All but rectifier tubes are tested with this switch. As the rectifier does not have a grid, such a test is not needed for it.

To test all other tubes, first record the normal plate current, if the tube is one of the screen-grid types such as the '22, '24, '35, '51, '37, or '38, push down on the selector switch and a second plate current reading should be obtained. If the tube under test is an ordinary three-element type, or '47 type, turn the switch in the "up" position to get the second plate-current reading. This change in plate current determines the condition of the tube. In most cases the greater the difference in the two plate current readings, the better the tube.

It is not possible to give any definite values to determine the condition of tubes. Receivers apply different voltages to tubes and therefore different current values will be recorded. However, after a little practice in testing good and bad tubes by this method, one can soon learn to tell when a tube is defective. When testing a detector, it is best to move the tube to another socket as in the detector stage a high bias is present which limits the plate current to a small value.

Measuring Resistances by the Deflection Method

THE conventional instrument for the measurement of resistance is the Wheatstone bridge, which is a costly piece of apparatus. However, there are two methods which provide a fair degree of accuracy (depending on the quality and accuracy of the apparatus employed), the least expensive being the deflection method.

This article has been prepared especially to assist users of "Super Akraohm" (wire-wound) resistors to employ the deflection method, using popular-priced milliammeters that are easily procured.

The low-range milliammeters that are so readily converted into multi-range volt-ammeters are also admirably adapted for conversion into multi-range volt-ohmmeters. The 0-1.5 D.C. milliammeter is probably the most desirable instrument for the purpose due to the fact that a dry battery has a normal potential of 1.5 volts or some multiple of this voltage, depending upon the number of cells connected in series which go to make up the total battery. Other popular instruments can readily be used for this purpose, depending upon the range of resistances to be measured and the source of current available.

The method of connecting the component parts of the circuit in the deflection method is schematically shown in Fig. 1A. In this diagram A is the D.C. milliammeter, having an effective resistance Rm; C is the dry cell or battery; Rc is the calibrating resistance which limits the amount of current passing through the milliammeter; and Rx is the resistance to be measured.

For example:

When A is a D.C. milliammeter having a full scale of 1.5 ma. and C is a source of potential of 1.5 volts and Rc + Rm have a total resistance of 1000 ohms and the X terminals are shorted, the milliammeter should read full scale, or, in other words, the resistance at X is zero. However, if Rx is a resistance of 1000 ohms the instrument should then show one-half scale deflection or .75 ma. This is proven by Ohms' Law which states that $R = \frac{E}{I}$

In this case R is the total resistance of the circuit which includes Rx, the resistance being measured; Rc, the calibrating resistance; Rm, the resistance of the meter; E is the voltage of the dry cell or battery and I is the current indicated by the deflection of the meter; therefore

$$Rx + Rc + Rm = \frac{E}{I}$$

transposing

$$Rx = \frac{E}{I} \;—\; (Rc + Rm)$$

So much for the explanation of the deflection method.

In order to avoid the computation of each resistance to be measured, we refer you to a table of calibrating resistances and ohmmeter scales 1 and 2. This information permits a rapid decision as to just what ranges of resistance can be measured with the instruments available and provides a means of calibrating a scale directly into ohms. The table is to assist in determining the proper calibrating resistance according to the range of resistance desired and voltage employed or instrument available.

TABLE OF CALIBRATING RESISTANCES

1	2	3	4	5
(A)	(B)	(Rc + Rm)	(Rx)	
Milli-amperes full scale	Voltage	Total resistance required for calibration	Scale	Multi-ply by
1	Low 1.5	1,500 ohms	1	1
1	Med. 4.5	4,500 ohms	1	3
1	High 22.5	22,500 ohms	1	15
1,5	Low 1.5	1,000 ohms	2	1
1.5	Med. 4.5	3,000 ohms	2	3
1.5	High 22.5	15,000 ohms	2	15
5	1.5	300 ohms	1	.2
10	1.5	150 ohms	1	.1

Column 1 of the table refers to the 0-1, 0-1.5, 0-5, and 0-10 D.C. milliammeters. Column 3 refers to the total calibrating resistance (Rc + Rm) necessary to obtain full scale deflection with the X terminals shorted when employing corresponding voltages as shown in column 2. In order to determine accurately the actual resistance of calibrating resistor Rc, or where the resistance of the instrument Rm employed is a considerable portion of the total resistance (Rc + Rm), the internal resistance of the meter employed (Rm) should be subtracted from the resistance (Rc + Rm) of column 3. As the resistance (Rm) of most instruments available for this purpose rarely exceeds 30 ohms, Rm can be neglected except where extreme accuracy is desired.

Scale 1 referred to in column 4 of the calibrating table is an 0-1 D.C. milliammeter scale which has been calibrated directly into ohms where the battery employed is 1.5 volts and the corresponding calibrating resistance (1500 ohms) shown in column 3 is used.

Scale 2 is an 0-15 D.C. milliammeter calibrated directly in ohms where the battery employed is 1.5 volts and the corresponding calibrating resistance (1000 ohms) is used.

The range of resistances measured by the deflection method is increased in direct ratio with the increase of voltage applied. Therefore, as the voltage is increased it is necessary to multiply the resistance indicated in the scales by the corresponding multiplier in column 5.

Occasionally it may be desirable to lower the range of resistances shown on scales 1 and 2 without changing the calibrating resistance or meter. In the case of the O-1 D.C. milliammeter using 1.5 volts, the resistance shown on scale 1 can be divided by four when a resistance (Rd) of 500 ohms is connected across the meter and calibrating resistance, as shown in Fig. 1B. Using the 1.5 D.C. milliammeter the resistance of scale 2 can be divided by five when the resistance (Rd) of 250 ohms is connected in the same manner.—*from Bulletin No. 73 of the Shallcross Mfg. Co.*

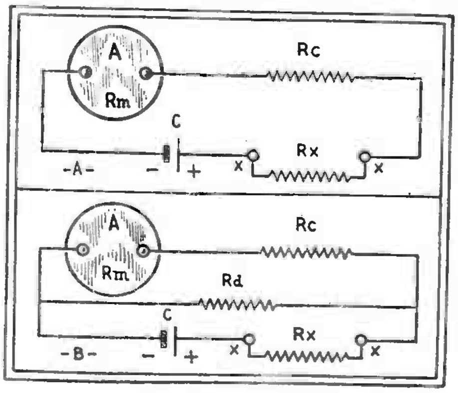

Fig. 1

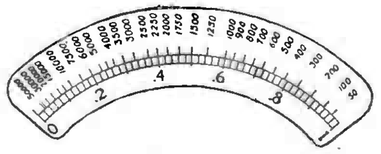

Scale 1

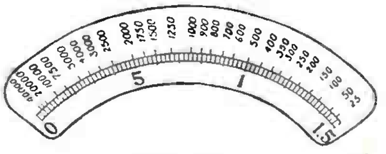

Scale 2

A Meterless Tube Checker Adapter

A Simple Device To Be Used in Conjunction With a Set Analyzer

THE Service Man who has a good analyzer with several meters does not desire to buy or build a tube checker unless he can make use of these meters. Of course, if he has a large business the cost of extra meters does not matter, but many Service Men find it hard to scrape up a few dollars!

The adapter which is illustrated in Figs. A and B makes use of any of the ordinary set analyzers—plugs into the socket of the adapter as would be done when taking readings from a radio receiver.

The diagram Fig. 1, is practically self-explanatory. A transformer PT of special design supplies the various filament voltages along with—3V. for grid-bias change (to obtain a shift in plate reading), 10 V. for the fifth element of the R.F. pentode 70 V. for the screen of screen-grid tubes, and 125 volts for plate supply.

The writer's transformer consists of a shell-type core with a cross-section area of approximately one square inch; the 90 volt primary is wound with No. 24 enamel-covered wire; the high-potential secondary, No. 26 enamel; and the filament secondary, No. 18 D.C.C. The number of turns of wire per volt is five. The constructor who wishes more complete information on transformer design is referred to the article, "The Design of Power Transformers," *on page* 214

Assembly

The large switch is a 10-point tap switch either single or double pole; the latter, with sections connected in parallel is preferable as it can more easily carry the high filament currents. Switch SW1 is used to give a shift of three volts in bias; a method which seems to be better than the use of a series "drop" resistor. Whether switch SW2 is necessary depends upon the provisions made in the analyzer for the screen-grid type tubes. Its purpose in the S.G. position is merely to put a bias of +70 V. on the G terminal of the tube, and to connect the control-grid cap of the tube to Switch SW1; in the Normal position, the regular grid connection to the grid terminal of the tube is obtained. The constructor can easily determine whether his analyzer has provisions for performing this duty and thus can adapt or omit SW2 accordingly.

Switch SW3 in the Normal position connects the cathode to the center-tap of the filament secondary through resistor R, and also to the zero-potential tap of the transformer. The pentode position puts a bias of +125 V. on the cathode when testing '47 and '33 type pentodes. *If this switch is in the pentode position with a heater-type tube in the socket, the tube will be ruined, for its cathode is not insulated for 125 V.*

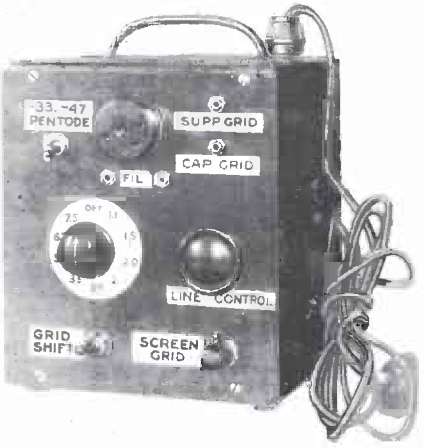

Fig. A

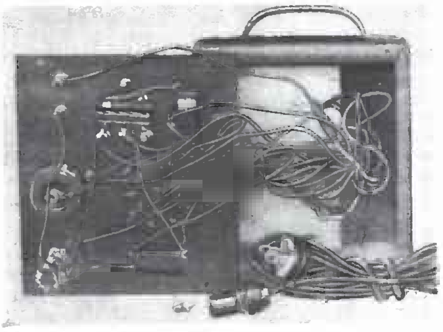

Fig. B

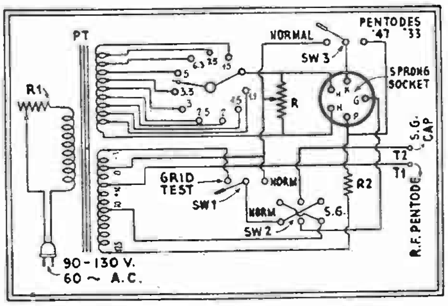

Fig. 1

Schematic circuit of the adapter.

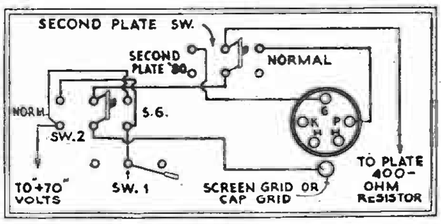

Fig. 2

Switching system for testing '80 tubes.

Resistor R1 adjusts the line potential to 90 V. for the primary of the transformer; since this may be the line voltage in some places. Read the filament voltage from the analyzer meter; if it does not correspond with the adjustment of the voltage selector switch, adjust R1.

Resistor R2 protects the plate milliammeter in case of shorted elements.

To use this adapter proceed the same as though you were analyzing a radio set. Take the plate reading with SW1 at Normal and then at Grid Test position; then subtract the readings to get the "change" (indication of mutual conductance). The meter readings may be calibrated from tubes known to be good.

Outside of the '80, all types of tubes commonly used can be tested without adapters.

The make of parts and their method of mounting are left to the constructor, as individual problems will arise.

The author built his unit as shown in Fig. A, without a 15 V. filament tap (because he did not have a 10 point switch; nor any immediate need for this voltage).

Resistor R1 must have *at least* 25-watts rating, wire wound, and with a resistance range of zero to several thousand ohms. (In spite of the fact that the writer used a compression-type unit as illustrated in Fig. B.)

Switches of the push-button type, because of their factor of safety, are recommended.

To test a "6.3 V." pentode throw SW2 to the S.G. position; which puts a potential of +70 V. on the suppressor grid and 125 V. on the plate.

If the analyzer with which this adapter is to be used indicates current in the grid lead, it is possible to test the second plate of an '80 by incorporating a D.P.D.T. switch to put the plate potential on the grid prong instead of the plate; this will be made clear by reference to Fig. 2.

This diminutive device requires a panel measuring only about 4 ins. square.

List of Parts

R, 50 ohm C.T. resistor;
R1, 25 watt variable resistor;
SW, 10 point switch (with break between contacts);
SW1, S.P.D.T. push-button switch;
SW2, D.P.D.T. lock-type push-button switch;
SW3, S.P.D.T. push-button switch;
T1, T2, pin tip jacks;
V, 5 prong socket;
R2, 400 ohm protective resistor.

A Universal Range Ohmmeter

Determining Resistance Values is an Important Phase of Servicing. This Simple Device is a Great Aid.

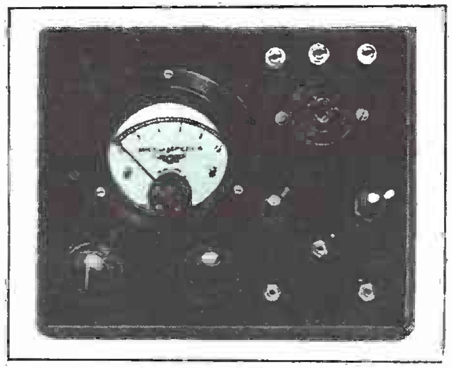

Fig. A
Panel view of the tester.

SINCE the advent of the more recent radio receivers, the lot of the Service Man has become more difficult. When the first electric sets made their appearance very few resistors were used in their construction. The power pack usually had a voltage divider composed of three or more sections, whose combined resistance seldom exceeded 50,000 ohms, and a small number of carbon and wire-wound resistors in various parts of the circuit. To check the values of these units, a voltmeter and battery combination was usually sufficient. However, when higher resistances were encountered, no accurate check was available.

As receiver design became more complex, service equipment had to be developed in order to meet the new requirements. More versatile set analyzers and ohmmeters came into being. Now, with receivers using higher voltages, automatic volume control, bi-resonator circuits, and resistance-coupled amplification, it is necessary to employ very high resistors, far beyond the range of the ohmmeter at the disposal of the Service Man, for regular service work.

With this in mind, the construction of an ohmmeter, that would accurately measure almost any resistance encountered in radio servicing, was planned. The completed unit far exceeded the low and high limits originally contemplated; it was possible to measure resistances as high as 15 megohms and as low as ½ ohm with a fair degree of accuracy. In this manner, resistances in automatic volume control circuits, grid-leaks in resistance coupled circuits, and bi-resonator circuits may be checked. In addition, R.F. coil primaries and secondaries, voice coils and power transformer windings may be tested for shorts; even for partial shorts.

The Ohmmeter

The essentials of the ohmmeter are parts readily obtainable, as no special switches or resistances are required. Refer to the diagram, Fig. 1.

An 0-1 ma. milliammeter is used; S1 and S2 are D.P.D.T. switches for changing the circuit from "series" to "shunt" testing; S3 is a S.P.S.T. switch for turning the battery current on and off; R1 is a resistance of 2000 ohms; R2 is a 3000 ohm variable resistor; B is a small 4½ volt "C" battery, R2 is variable for zero adjustment of the meter.

R4 is a carbon resistor from 500,000 to 750,000 ohms depending on the voltage supplied by the power transformer, P.T.—this resistance limits the current flow into the meter, thereby preventing accidental burn-out; R3 is a variable resistor of 250,000 ohms and is used as a zero adjustment for the high voltage; C1 is a fixed condenser of .1-mf. or more—the value is not critical as it is used to provide a smoother current flow in-so-far-as it absorbs each current pulsation, in taking a charge from the rectifier output. Only a condenser of high quality should be used as a breakdown might be disastrous to the power transformer.

A 5-volt ¼-ampere tube was chosen for the rectifier, because of its low current requirements, and also because either a '01A, '12A or 171A tube is usually included in the kit of the Service Man.

In order to keep the completed unit as compact and light as possible, it was necessary to select as the power transformer, one that was very small and light. To this end, various audio transformers were tried. Bearing in mind that a high voltage was necessary to secure a very high-resistance range, a good quality 10-1 ratio audio transformer was selected. Due to the construction of the transformer, about 120 turns of B.&S. gauge No. 22 enameled wire was wound over the regular transformer secondary to obtain the required filament voltage for the rectifier. A layer of fish paper was wrapped around the winding and the laminations were re-assembled.

At this point it may be expedient to mention that care should be exercised in choosing a transformer with sufficient iron. Lack of sufficient iron in the transformer will cause the core to become saturated and overheat, which would result in a rapid drop in voltage.

A flush receptacle was placed in the rear of the ohmmeter compartment to facilitate easy connection to the power line and to eliminate hanging wires when not in use.

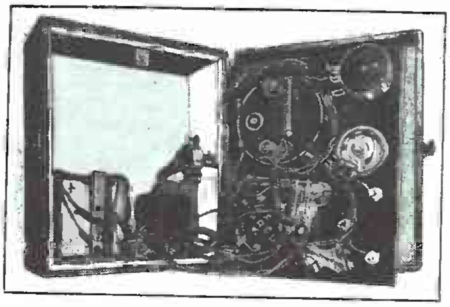

Fig. B
Internal view of the tester.

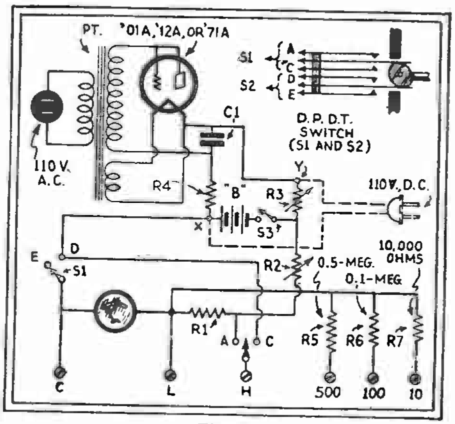

Fig. 1
Schematic circuit of the tester.

Low Resistance Measurements

For low resistance measurements, terminals C and L (Fig. 1) are used. The battery switch S3 is closed and the D.P.D.T. switch, composed of switches S1 and S2 as shown in the diagram, is moved to the "shunt" position (positions D and A respectively). This causes a current flow through R1 and R2 through the meter. With R2 adjusted to show a full scale deflection (1.ma.), the resistor under test is shunted across the meter. The range of this scale is from ½ to 1500 ohms, depending upon the internal resistance of the meter used. For measurements up to 75 ohms it may be necessary for every constructor to plot his own graph as each meter will vary slightly. Where it is inconvenient to obtain low value resistors for plotting a curve, the following formula may be used for the low range.

$$R = \frac{Rm}{\frac{I1}{I} - 1}$$

Where
- R is the unknown resistance;
- Rm is the internal resistance of the meter;
- I is the current range of the meter, in this case 1 ma.;
- I1 is the reading obtained.

Suppose the meter reads .16-ma. when the unknown resistor is being measured, then

$$R = \frac{30}{\frac{1}{.16} - 1} = \text{approximately 5 ohms.}$$

For the convenience of Service Men, the following quantities have been measured.

.02 ma.	.6 ohms
.16 ma.	5 ohms
.22 ma.	6.6 ohms
.28 ma.	10 ohms
.44 ma.	20 ohms
.62 ma.	40 ohms
.72 ma.	60 ohms
.76 ma.	80 ohms

The High Range

With the ohmmeter. battery-operated, the high range may be secured by either the series or shunt method. The test leads should be inserted in pin-jacks C and H. switch S3 remaining closed. The position of the D.P.D.T. switch (S1 and S2) depends upon which method is used. The authors suggest that the series method be used until such time as the battery falls below 3½ volts. When this occurs the effective high range of the meter is impaired and the shunt method must be resorted to by setting the D.P.D.T. switch to shunt position. In this way the meter will give accurate readings even after the battery voltage has fallen to 2 volts because of the fact that only the value of R1 and the resistance of the meter is taken into consideration for the measurement of resistors by the shunt method.

The following is a table of meter readings obtained with various resistors under test. using the series method, battery-operated. (Switches S1 and S2 in positions E and C respectively.)

.985 ma.	150 ohms
.970 ma.	300 ohms
.86 ma.	750 ohms
.76 ma.	1500 ohms
.60 ma.	3000 ohms
.56 ma.	3300 ohms
.52 ma.	3600 ohms
.43 ma.	6000 ohms
.33 ma.	9000 ohms
.23 ma.	15000 ohms
.13 ma.	30000 ohms
.07 ma.	60000 ohms
.05 ma.	90000 ohms
.03 ma.	150000 ohms

The accuracy of the high range in the shunt position, battery operated. varies with the accuracy of R1. and for this reason no table or curve is being furnished. A table should be made by using several comparison resistors.

When it is necessary to measure very high resistances the transformer should be connected to the A.C. line. and a '01A, '12A or '71A tube inserted in the socket of the power supply. With switch S3 open, and the D.P.D.T. switch in series position. the variable resistance R3 should be adjusted for full scale deflection of the meter. when the test prods, which are connected to C and H, are shorted. The scale for this range will vary with the amount of voltage delivered by the power supply. In the ohmmeter shown. the voltage available was approximately 850 volts. D. C., and the following tabulation was made:

250.000 ohms	.86 ma.
500.000 ohms	.68 ma.
1 megohm	.64 ma.
1½ megohms	.56 ma.
3½ megohms	.38 ma.
4 megohms	.30 ma.
5½ megohms	.20 ma.
9 megohms	.14 ma.
10 megohms	.12 ma.
11 megohms	.10 ma.
12 megohms	.08 ma.
13 megohms	.06 ma.
14 megohms	.04 ma.
15 megohms	.02 ma.

In some localities. alternating current may not be available. but the ohmmeter may be employed on direct current without the A.C. power supply. The 110-volt line should be connected across points X and Y shown on the schematic. Where it is desired, the instrument may be made more versatile by bringing out two additional leads so that the ohmmeter may be used either on A.C. or D.C. without any added switches. However, when a D.C. line is used as the voltage source. the effective high range will be reduced to about 2½ megohms.

It will be noted that three resistors and three tip jacks have been incorporated so that the outfit may also be used as a voltmeter. The values of these resistors depends upon the desired voltage ranges: R5, 500,000 ohms; R6. 100,000 ohms; and R7, 10,000 ohm. Voltage ranges of 500, 100, and 10 volts were obtained respectively.

USE OF DUAL OSCILLATORS

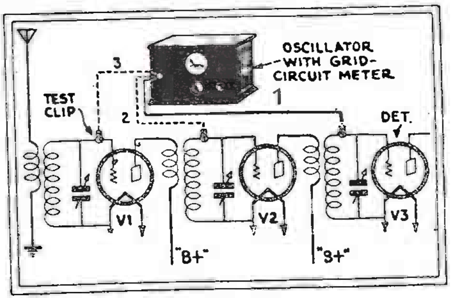

Fig. 1

The usual method of applying a single oscillator successively to R.F. circuits.

There are various methods employed to line up the R.F. stages of broadcast receivers, but many of them leave much to be desired. One rather common arrangement for adjusting the various stages is shown in Fig. 1, where we have an oscillator and a grid meter in series with its grid leak; the complete circuit of the oscillator being given in Fig. 2.

In lining up the various stages, the test clip is connected to one of the tuning condensers and the oscillator's frequency is varied for minimum grid current.

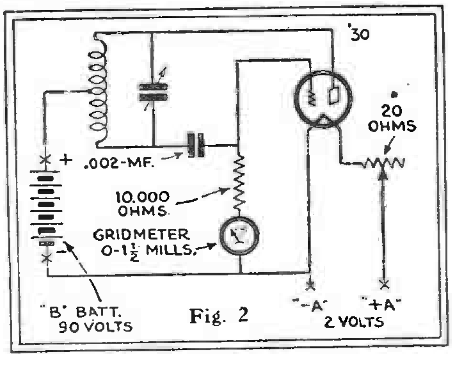

Fig. 2

Ordinarily, the first condenser used is one having no adjustment; if the set employs three tuned stages, and only two are provided with trimmers, the condenser without a trimming condenser is used first, other stages being lined up with respect to it. With minimum grid current, the test clip is moved to the condenser of an adjacent stage, and the trimmer is varied until the grid current again is at minimum. This procedure is repeated until all the stages have been lined up; then the whole process should be usually repeated, for best results.

The essentials of a new arrangement are shown in Fig. 3; this set-up is inexpensive and will save considerable time. Two simple Hartley oscillators are necessary; the new two volt ('30) tubes are suitable. Each oscillating circuit is provided with two leads with clips; and both oscillators are mounted in the same cabinet and adjusted to cover the same frequency range, as shown later.

To operate, set the clips on the condensers of two adjacent stages. The trimming condenser of one stage is then varied until zero beat is obtained in the loud speaker, or in the headphones connected in the plate circuit of one of the oscillators. Both oscillators should be oscillating at the same frequency, before they are connected to the stages. When connected, they will still oscillate at the same frequency, if each tuned circuit in the receiver is tuned to the same frequency. Hence, when the tuned circuits are lined up, zero beat between the oscillator frequencies will be reached.

When the first two stages are properly lined up, the leads are changed over to the next pair of tuned circuits and then the latter are adjusted. It is clear that a closer approach to the desired condition of resonance will result by adjusting two stages at a time, and much time will be saved.

The cost of the necessary equipment is less than in the ordinary arrangement; for the grid meter or plate meter, which is quite a fraction of the total cost, can be left out.

Matched coils and condensers should be used in the two oscillators. Each oscillator is adjusted with the same tuned circuit, so that the minimum constants are the same; one of the condensers can be adjusted with a trimmer, if desired.

The Service Man usually employs some special points on the dial of the receiver which is to be lined up; one of these is selected, and one of the oscillators is adjusted to some setting near the natural frequency of the tuned circuit in the receiver. A pair of headphones is then connected in the plate circuit of the other oscillator, and the dial is adjusted until zero beat is obtained with the first oscillator.

With both oscillators operating on the same frequency, the leads are connected to the tuned circuits in the receiver; and the trimmer in one stage is adjusted for zero beat in the loud speaker, or in the phones. When the leads are clipped on the tuned circuits the frequency of the oscillators will, usually, change. It will be noted that the oscillator and receiver coils are in parallel as are, also, the oscillator and receiver condensers. The total inductance is thus halved and the capacity is doubled, leaving the frequency of oscillation nearly the same.

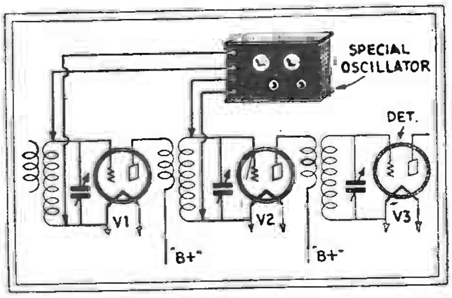

Fig. 3

CHAPTER IV

Commercial Service Equipment

A Knowledge of Commercial Service Equipment is Essential to Successful Servicing. In This Chapter are Described Both the Older and Later Instruments.

The AAA-1 Diagnometer

SKILL in locating radio troubles and speed in remedying them spell success for the radio Service Man. In radio work, however, both experience and aptitude must be augmented by suitable test instruments. This is obvious, but somehow many Service Men fail to realize the truth of this statement. Some try to "get by" with a miscellaneous collection of meters, while others shop around for the cheapest "set tester" on the market. Apparently, these men are blissfully unaware that trashy equipment will waste time instead of save it.

It takes good material to make a good service instrument. It also takes more than fine meters to turn out a real service instrument. Years of experience are required, and in addition, an intimate knowledge of the problems which are encountered by the Service Man. For after all, a service instrument which can merely perform a few standard tests does not fulfil its purpose, no matter how fine its meters or its case.

The original Supreme Diagnometer, placed on the market a number of years ago, was a fine piece of work and a splendid help to every Service Man who owned one. Recently, however, as a climax to years of developmental work, Supreme engineers have announced a new instrument—the AAA-1 Diagnometer—which is of the latest type in radio testing equipment. A front view is Fig. A; the interior, Fig. B; and the schematic circuit is Fig. 1 (this diagram appears on the following page).

This new device is so versatile, efficient, and accurate that it is really more than a testing instrument. It is the Service Man's "junior partner,"—always capable of tackling and solving any service job encountered, no matter how intricate. The design of the new Diagnometer is extremely flexible. It can be used to service the latest sets and the most obsolete ones. Superheterodynes, automobile sets, portables, midgets, power-operated or battery sets, are all the same to this instrument. Similarly, sets equipped with the newest tubes, such as variable-mu's or pentodes, can all be tested with this instrument. It will analyze circuits of every type including intermediate stages of "superhets," tuned R.F. circuits, resistance coupled amplifiers, power detectors, power pentode output stages, power supply circuits, etc.

Five Important Testing Functions

The Diagnometer functions as an analyzer, a tube tester, a shielded oscillator, an ohmmeter, and a capacitor tester. These five major testing operations will each be described later. Incidentally, this instrument, although especially constructed for portable use, may also be mounted on a wall or in back of a test bench, by means of a special wall mounting. No matter how it is used, it comprises, solely within itself, a complete radio laboratory.

The analyzer circuits are designed to meet every radio-servicing requirement on all types of sets. Provision is made for reading plate currents of circuits and tubes under test without the manipulation of any current switches, at the same time testing the various voltages of other circuits terminating at the tube sockets. As a result, the high voltage circuits remain unbroken in all tests. In order to switch the meter from one analyzer plug circuit to another, it is merely necessary to press a non-locking push-button.

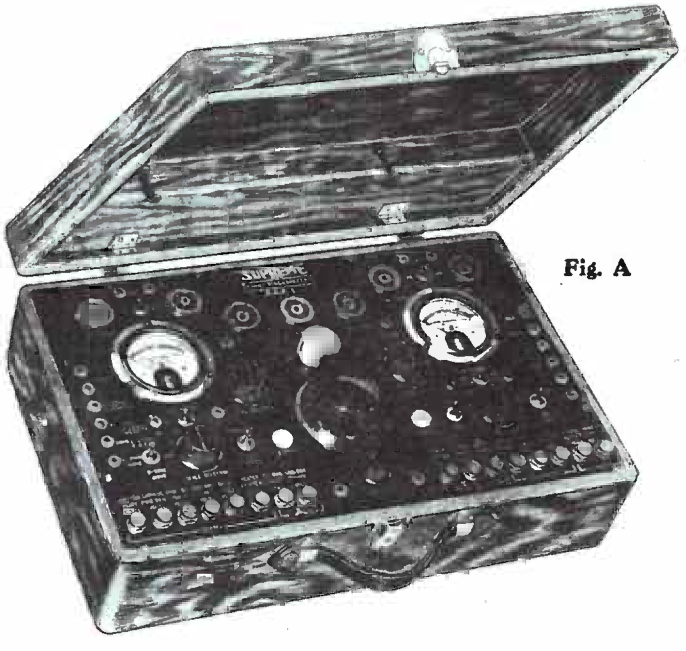

Fig. A

A veritable portable laboratory; the Model AAA-1 Diagnometer.

The Diagnometer can be used for an analytical A.C. voltage (1000 ohms-per-volt) test, up to 1000 volts on each side of a center-tapped plate supply transformer, through the rectifier tube socket. Provision is also made for the reading of the A.C. line voltage through the A.C. line supply cord, by means of a push-button. This arrangement eliminates the need for external connections in making this test.

A feature of considerable importance is the fact that all circuit analyses of the radio set may be made during the actual operation of the receiver, utilizing the power normally supplied, without disturbing any permanent connections of the set itself.

The analyzer plug, which is a part of the Diagnometer, has a five prong base; an improvement in design is the special snap catch which holds adapters until released. A simple adapter permits it to be used with four-prong sockets. A control-grid lug is attached to the analyzer plug by a flexible lead, which permits the operator to complete the control grid connections of screen-grid sockets, regardless of the make or type of the radio receiver. For the R.F. pentode tubes, a circuit is provided which terminates with the necessary terminal of the analyzer plug, so that this terminal may be connected to a suitable adapter for these tubes.

It would be impossible to enumerate in a short article all the different analytical tests which are possible simply by placing the analyzer plug in the radio set sockets and the tube in the analyzer load socket. A few of these readings are: direct current or alternating current filament voltage, screen-grid voltage, "C" bias volt-

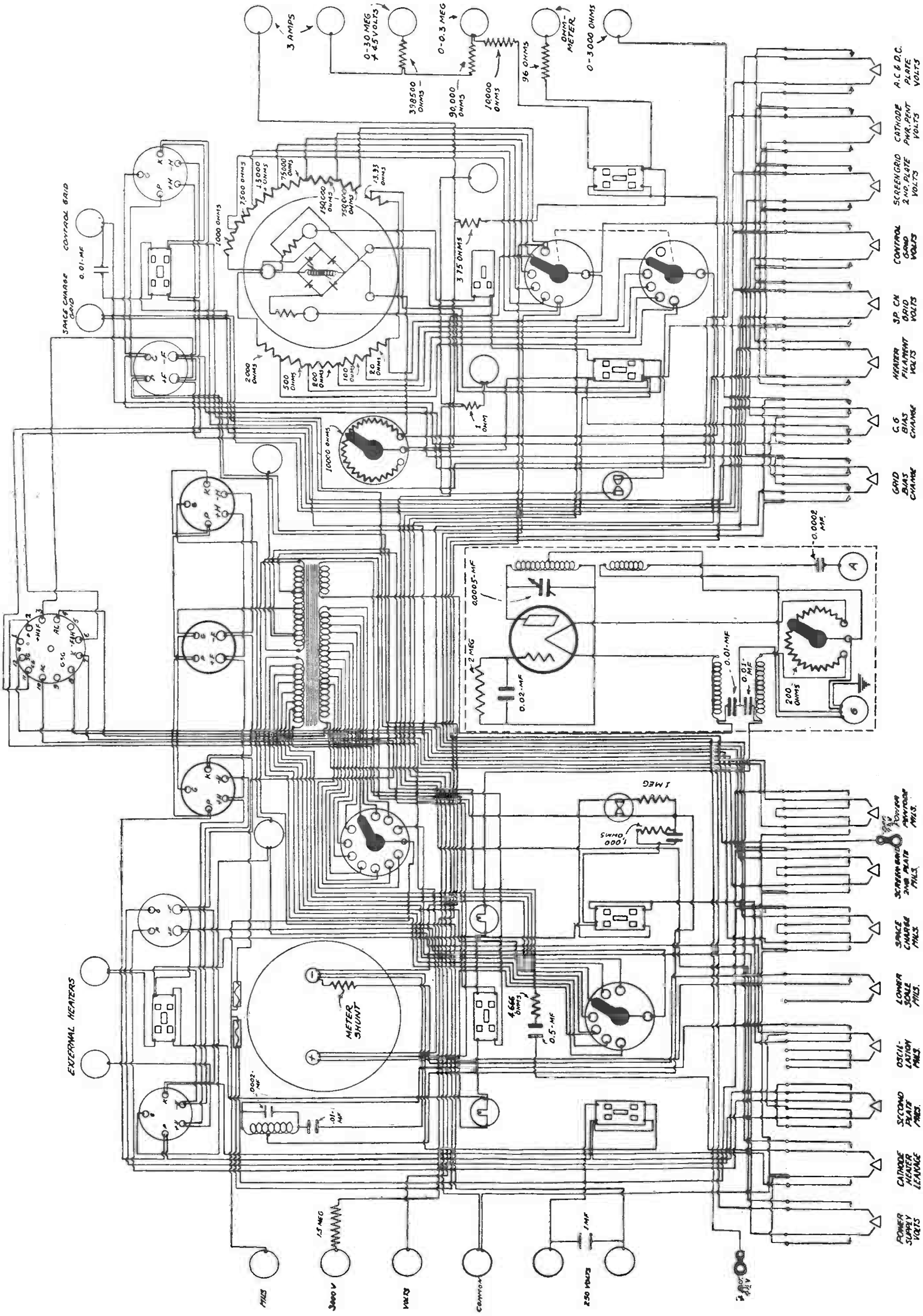

Fig. 1

Schematic circuit of the Supreme Model AAA-1 Diagnometer. The instrument is pictured in Fig. A, on the preceding page.

tage, screen-grid current, cathode voltage, control grid voltage, plate current, control grid current, etc.

In this instrument, all test circuits and meter ranges are available for external use, through bakelite covered pin jacks. Current ranges of 2.5, 10, 25, 100 and 250 ma. and 2.5 amperes are available for external use for either A.C. or D.C., using a copper-oxide rectifier type meter and an associated scale selector switch. This meter, often referred to as a multimeter, is another very important feature of the new Diagnometer. Due to the fact that it can be employed to read A.C. and D.C. potentials, its use results in an enormous simplification of a great many tests. Of course, the value of this unique meter is further enhanced by the design of the special selector switch.

An external A.C. and D.C. voltage range of 2500 volts is provided in addition to the A.C. and D.C. ranges of 2.5, 10, 25, 100, 250, and 1000 volts. The 2500-ohm-per-volt high resistance D.C. voltmeter ranges of 0-40 and 0-200 are also available through external connections for testing automotive and airplane radio installations.

Mutual Conductance Method Used in Tube Tester

No analysis of a radio receiver is complete without a thorough check-up of the condition of its tubes. The tube tester incorporated in the AAA-1 Diagnometer employs what is known as the grid or mutual conductance index test. Tube engineers consider this test to be the most accurate of the several in general use. An oscillation test is also included, for matching tubes to be used in radio frequency stages. A gas test is provided for all amplifier types of tubes, indicating the gas content of the tube under test. In connection with the testing of cathode heater types of tubes, an ingenious cathode-heater leakage test is available, which shows whether or not the cathode is shorted to the heater and, in addition, also indicates leakages which could not possibly be shown by the usual "short" tester.

In addition to the two sockets provided for analyzing purposes, the instrument is equipped with five tube-testing sockets and also with the necessary switches for connecting the proper potentials to these sockets for tube tests. Potentials ranging from 100 to 240 volts, A.C., may be employed for the tube testing. A selector switch provides the means of selecting the correct potential. Since the tube checker is adjusted to the correct line potential, it is unnecessary to make use of complicated tube testing tables. Instead, a few simple test readings are sufficient for the various types of tubes and these are compared with values provided with the Diagnometer. A "filament-heater" selector switch is provided for all tubes having filament ratings from 1½ to 7½ volts. A great convenience from the standpoint of the Service Man is the fact that all the potentials employed in the tube tester are also available for external use. A pilot light is provided which indicates when the tube testing circuits are in operation.

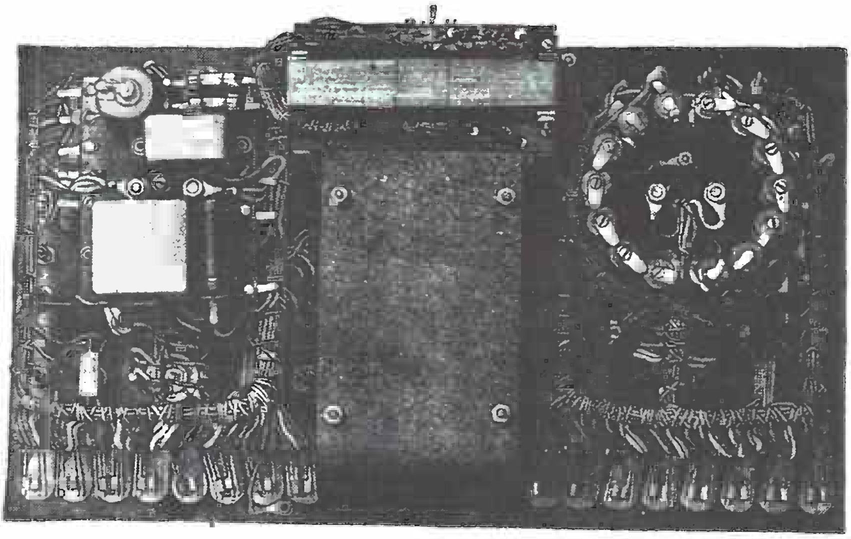

Fig. B

Interior view of the latest Diagnometer.

Modulated and Attenuated Oscillator Provided

Nowadays, a set analyzer without an accurate oscillator is of little use to the Service Man. He is often called upon to "peak" and "flat-top" the intermediate stages of superheterodynes, to synchronize, balance and neutralize tuned R.F. stages and to perform many other tests which are impossible without a good oscillator. The Diagnometer employs a completely shielded, modulated and attenuated oscillator which operates directly from the A.C. line. This oscillator is individually calibrated for all frequencies from 90 to 1500 kc. and, if higher frequencies are needed, they may also be obtained. The output of the oscillator can be controlled from maximum to an absolute minimum.

The Diagnometer resistance ranges are printed on the top scale of the multimeter. The ohmmeter will measure resistances of 0-5000-ohms range; and a megohmmeter measuring resistances up to 500,000 ohms, with a battery of only 4½ volts (the latter is five times the range coverage previously offered in resistance test units actuated with this size battery). By means of an external 45-volt battery, it is possible to extend the indicating range to 5 megohms. Continuity testing up to 25 megohms is possible through the use of a 250-volt D.C. connection.

A zero-ohm corrector is provided for adjusting the multimeter sensitivity to the battery or other power supply variations. Incorporated in the Diagnometer is an output circuit at 250 volts D.C. for the 25 megohm range; the same supply (in accordance with R.M.A. standards) is used in testing condensers for leakage.

The new Diagnometer is provided with means for making capacity measurements ranging from .002 to 10 mf. It can also be used to test paper condensers, applying 250 volts D.C. to them. This test will indicate leakage up to about 4 megohms.

The Diagnometer is shown in the two accompanying illustrations. Fig. A is an external view with cover open. The case is of substantial hardwood and the cover is of the slip-hinge type, with adequate room for the analyzer cable, test probes, small tools and other necessary accessories. The over-all size of this instrument is 6⅞ in. x 11¼ in. x 18⅜ in. and its weight is less than 24 pounds. Fig. B gives an excellent idea of the appearance of the inside of the Diagnometer. The instrument is supplied complete with all necessary accessories such as analyzer plug, cable, power supply plug and cable, output adapters and test leads.

There is one point which should be emphasized in connection with the use of the Diagnometer, and that is the fact that the instrument is very easy to use.

With each instrument is included a 100 page instruction book; in addition, there is available a special 85 page data book. Thus, there is no single point about this instrument which, though incorporating the most advanced engineering in service instrument design, is not clearly explained to the owner.

ANALYZER AND CHECKER

COMPLETENESS in servicing equipment is excellently illustrated by this combination instrument for precision testing, both of receivers and of their tubes separately. Eleven meter ranges are also available for external tests, by means of pin-jacks. The meters are precision instruments; the A. C. meter (left) having a double movement to permit lowest current consumption; and the D. C. meter being a 1000-ohm-per-volt type. With the elaborate switching equipment illustrated, care has been taken with the circuit arrangement so that it is impossible to damage it by incorrect operation. Meter readings cover up to 800 volts and 100 milliamps; higher scales may be obtained on special order. The equipment is housed in a black molded bakelite carrying case.

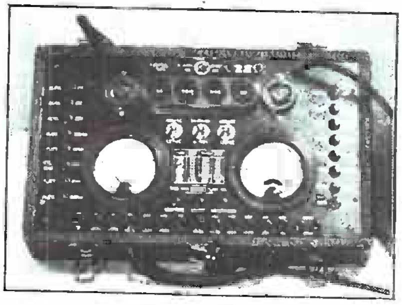

Flewelling Van-Horne "Model H" analyzer.

(*Van Horne Tube Co., Franklin, Ohio.*)

Dissecting A Modern Set Tester

IN the preceding pages was described in a general way an up-to-date set analyzer, the model AAA-1 Diagnometer. It is proposed to describe in greater detail in this treatise the several components which go into the make-up of this most modern of radio testing devices.

On this basis, we find that the instrument contains the following units which, althought they may be considered distinct in their action, are part and parcel of the operation of the set analyzer as a whole (that is, some service jobs will call for only one portion of the Diagnometer; while the other portions, perhaps singly, or in combination, will be brought into action on other calls):

1. Shielded Oscillator;
2. Set Analyzer;
3. Tube Checker;
4. Multi-Range Ohmmeter;
5. Capacity Tester.

The schematic circuit of the first unit, the service oscillator, is illustrated in Fig. 1; in Fig. 2 is shown a graph that represents the general type, one of which is furnished with each instrument, which is required to determine the frequency at which the oscillator is being operated.

THE OSCILLATOR

The oscillator incorporated in the model AAA-1 Diagnometer has the following features:

1. Intermediate tuning range, approximately 90 to 550 kc., and regular broadcast range of 550 to 1500 kc.;
2. Adaptability for operation with ordinary 100-120 and 200-240-volt A.C. power supply potentials, with 100% modulation;
3. Completely shielded in cast aluminum tray, with bakelite-covered aluminum panel, and electrically isolated from all power-supply circuits to prevent electrical shocks or damage to sensitive receivers;
4. Vernier-movement tuning dial for accurate-tuning control; and,
5. Regulation of oscillator output by manual control of the input potentials.

The unit is adaptable to all of the oscillator tests outlined in the radio manufacturers' service literature pertaining to radios which require readjustments.

Modulation Characteristics

Modulation of the R.F. signal of the oscillator is automatically accomplished by the A.C. power supply, so that the output signals of a radio receiver coupled to the oscillator will have an A.F. "pitch" corresponding to the frequency of the power supply system. The resistance and capacity values of the oscillator are such that practically no grid-leak modulating action results; instead, modulation is accomplished by the A.C. power supply.

It is the purpose of the grid resistor and capacity combination: (1), to provide the proper grid bias for the oscillator tube so as to maintain the proper impedance relations between the grid and plate circuits; and (2), to provide protection to the oscillator circuits against possible short circuits between the grid and plate elements.

The fact that the modulation of most D.C. operated oscillators is about 30%, whereas the modulation of an A.C. operated oscillator is practically 100%, makes the Diagnometer oscillator very adaptable for adjustments of modern radio sets in which the blasting effect of strong signals is minimized by volume level circuits which are most efficient when operating with signals from a 100% modulated broadcast station.

If strong R.F. signals are applied to a sensitive receiver of this type by an unmodulated oscillator, it is possible to overload the detector with R.F. energy without having any appreciable loud-speaker output of A.F. energy. In some sets, an overloading of these circuits with R.F. energy may result in two output peaks, and in broad tuning, when the modulation is considerably less than 100%. It is, therefore, obvious that the loud-speaker output is greatly dependent upon the percentage of the modulation of the input R.F. signals.

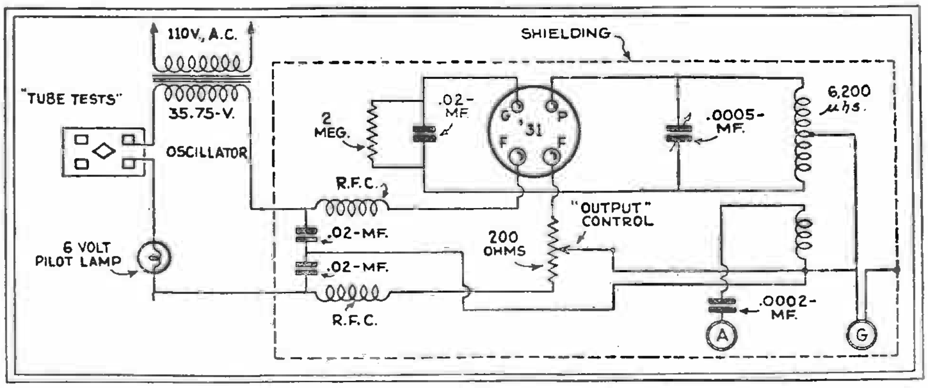

Fig. 1

Complete schematic of the AAA-1 oscillator. Modulation takes place at the frequency of the power supply, and does not depend upon the value of the grid-leak and grid-condenser.

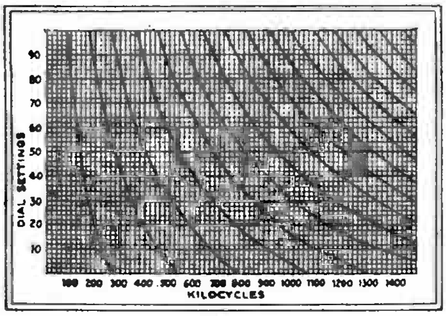

Fig. 2

Calibration chart of the Supreme AAA-1 oscillator.

When first connected for operation, the oscillator tube shield between the "Type" and "31" panel markings should be removed and a type '31 tube inserted in the oscillator tube socket before replacing the shield. The procedure for the operation of the oscillator is very simple and is outlined as follows:

Sequence of Operations

1. With the Diagnometer properly adjusted to the A.C. power supply, throw the "Oscillator-Tube Tests" toggle switch to the "Oscillator" position. The adjacent pilot light, which is connected in series with the oscillator tube filament, should be illuminated;
2. Insert the red dummy-antenna pin plug into the "Ant." pin jack of the Diagnometer's oscillator;
3. Insert the black dummy-antenna pin plug in the red "Gnd." pin jack of the oscillator;
4. Attach the "+" dummy-antenna clip to the "Antenna" binding post of the radio receiver, or to a contact point specified by the radio manufacturer;
5. Attach the remaining dummy-antenna clip to the "Ground" of the radio set;
6. Turn the radio receiver's power supply switch "On." As the tubes in the chassis attain their normal operating temperature, adjust the "Oscillator-Output" and receiver volume controls while tuning the oscillator and radio set to the desired frequency for any receiver adjustment which may be necessary;
7. If it is desired to make the adjustment by output meter indications, turn the power-pack switch "Off," insert the push-pull power tubes (when, for instance, the output tubes are used in this manner) in the plate-lead-adapters, and replace the tubes (with the adapters attached) in the push-pull power tube sockets;

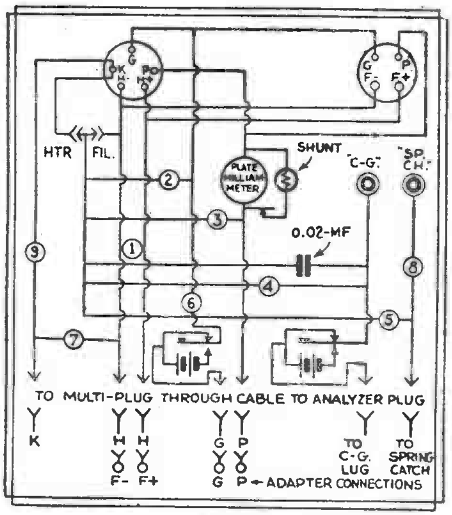

Fig. 4

The power unit of the Multi-Meter.

8. Insert the plate leads of the adapters in the "+ Output" and "0-1000 Volts" pin jacks, and set the "Scale Selector" at "1000";

9. Throw the "Ohmmeter-Multi-Meter" toggle switch to the "Multi-Meter" position, and connect a suitable conductor between the "Multi-Meter Common" and "— Output" pin jack;

10. Turn the power supply switch "On." As the tubes in the chassis attain their operating temperature, adjust the "Scale Selector" for a "Multi-Meter" deflection at, or below, two-thirds of the full scale deflection. The "Multi-Meter" deflections will be arbitrary, and should not be interpreted in the values marked on the dial;

11. Make the proper tuning readjustments on the radio under test for maximum output readings, resetting the "Scale Selector" whenever necessary to keep the "Multi-Meter" needle from going off scale. During the "Multi-Meter" indications, the oscillator signals should be audible from the loud-speaker; failure to hear the signals which are indicated by the "Multi-Meter" would be an indication of defective output transformer or speaker circuits;

12. After completing the adjustments, turn the set "Off," disconnect the oscillator, remove the adapters from the tubes, and return the power tubes to their proper sockets. When using the oscillator portion of the Diagnometer with receivers having only one power tube, of course only one of the adapters is required, with the plate lead connected to the "0-1000 Volts" pin jack, and with a test lead connected between the "Output" pin jack and the grounded chassis of the set under test. If the operator finds it more convenient, the "0-1000 Volts" and "+Output" pin jacks may be connected across the voice coil terminals of the radio receiver under test; otherwise, the procedure is similar to that outlined above.

Tuning Ranges

The oscillator incorporated in the Supreme Diagnometer is designed and calibrated for universal application for all intermediate and broadcast frequency requirements with multiple tuning of all frequencies between approximately 90 and 1500 kc. (kilocycles).

It is, therefore, adaptable to all present commercial intermediate frequencies as well as such frequencies between 90 and 550 kc. as may be selected for the I.F. tuning of future radio receivers, thereby greatly lessening the probabilities of obsolescence. This design is a radical contrast to the earlier types which provide tuning at only one or two I.F. points and which will become more or less obsolete as new intermediate frequencies are chosen and announced by superheterodyne receiver and converter manufacturers.

This unusual adaptability is accomplished by tuning over a fundamental range of approximately 90 to 250 kc., all higher frequencies being provided in the higher or harmonic-frequency range of this fundamental-frequency band, for the tuning and balancing readjustments of tuned R.F. receivers which operate within the American broadcast range of 550 to 1500 kc.

Unusual tuning selectivity is provided for all broadcast frequencies without sacrificing the apparent broadness which is essential for the "flat-topping" of intermediate I.F. tuning circuits as recommended by some superheterodyne manufacturers. In choosing broadcast tuning frequencies, it is generally advisable to select the desired frequency at a dial setting between 40 and 50, where the curve has a slope of about 45 degrees on the calibration chart.

A receiver frequency can be determined with the oscillator by working the oscillator as near the zero setting as possible. The recommended procedure for these determinations consists of setting the oscillator tuning dial at "0" and then moving the oscillator dial from "0" to a point which will resonate the oscillator with the receiver at any arbitrary tuning of the receiver.

This procedure will cause the harmonics of the oscillator to be approximately 250 kc. apart. By noting the oscillator dial setting for the resonant condition obtained by this procedure, the operator will be able to follow the horizontal line from the dial setting on the calibration chart to the curve, thence downward to the frequencies corresponding to the dial setting where it will be observed that his receiver is resonating at one of about five frequencies; and since he will know the approximate frequency of his receiver, that is within 200 or 250 kc., there will not be any difficulty in finding the exact frequency indication which is nearest this approximate frequency.

Vernier-Movement Tuning Dial

The ratio-gearing of the tuning dial is provided for fine tuning adjustments. *Care must be exercised in its manipulaton at the "0" and "100" positions so as not to force the movement beyond these extreme positions,* thereby affecting the accuracy of the calibration. By using the vernier-movement tuning dial with which this oscillator is equipped, and with the apparent tuning broadness of the oscillator over its fundamental range, the user will find very little difficulty in varying the tuning of the oscillator the few kilocycles which are necessary for either the "flat-topping" or "staggering" adjustments of the I.F. stages of superheterodyne receivers.

One superheterodyne manufacturer, using an I.F. of 175 kc., recommends that the "flat-topping" adjustments should be between 171 and 179 kc.; that is, an adjustment of 4 kc. either way from the basic intermediate frequency. Service Men should note that at these points on the calibration chart of the Diagnometer's oscillator, each scale division of the oscillator tuning dial represents about 2½ kc. so that 4 kc. may be obtained by moving the dial 1.6 divisions. The fractional division can be very closely approximated by observing the vernier ratio of the dial movement.

A RADIO set analyzer is essentially an extension of the circuits which normally terminate at a radio tube socket, providing convenient means for connecting a meter, or meters, across the circuits for potential measurements, or in series with certain of the circuits for current measurements.

The basic mechanical elements consist of: (1), an analyzing plug, properly connected with; (2), cabled conductors to the terminals of; (3), a tube socket, or sockets, on the panel of the analyzer, and with; (4), the necessary analyzer switching arrangement for connecting; (5), a meter, or meters, across or in series with the cable circuits for making potential or current measurements.

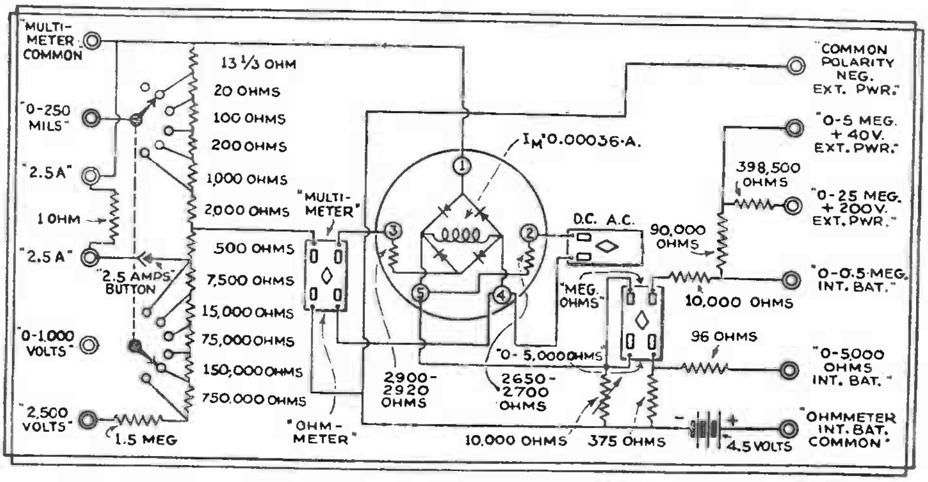

Fig. 3

Complete schematic, showing all values, of the Multi-Meter. Note the bridge arrangement of the rectifiers used for obtaining a high resistance A.C. meter.

The various commercial analyzing testers differ only in refinements of these basic elements, the main differences being in the switching arrangement, and in the meters employed.

Although the radio analyzer is probably the basic and most simple of all practical radio testing equipment, the flexibility of its applications and the value of its indications can be realized only by radio men who are familiar with radio testing principles.

Circuit Subdivisions

As the fundamental operating characteristics are practically the same for all radio sets, for the purpose of analysis the circuits of the radio receiver fall into two classifications, namely: (1), the tube-socket circuits which are supplied with potentials from the power pack and may always be subjected to tube-socket analysis; and (2), the input (pickup) and the output (audible reproducer) circuits, which may or may not be directly connected to the receiver's power pack, and may require the use of some method of testing other than that afforded by the tube-socket analysis.

The electrical characteristics of the circuits which are not amenable to tube-socket analysis may be determined by their reaction to broadcast or oscillator signals with the radio set in operation. Defects in these circuits may be located by means of "continuity tests."

If properly connected, each filament, plate, grid, screen-grid or space-charge-grid, and cathode circuit of a radio receiver terminates at a tube socket. In other words, the set is designed for its tubes which are the heart of radio circuits; the tube circuits constitute the arteries, veins and nerves, centering at the tube sockets at which most of the needed information as to the operating characteristics of a receiver may be ascertained with a good analyzer.

Design Considerations

In the design of the Model AAA-1 Diagnometer, for example, the value of complete analytical functions was fully appreciated, and every advanced idea of practical value was incorporated in an effort to provide analyzing facilities of unsurpassed merit.

For instance, the Diagnometer was the first testing device to introduce the use of an "analyzing plug" equipped with a snap-catch arrangement for engaging the adapter for preventing its becoming separated from the plug in radio tube-sockets which have tight-fitting contacts. The analyzing plug utilized with the "AAA-1" has a UY base, as most sockets in the newer types of radios are of the UY or 5-prong type. A 4-prong adapter is furnished as part of the equipment for analysis in rectifier and other type UX sockets. The control-grid lug is attached to the analyzer plug by a flexible lead which enables the operator to complete the control-grid connections of screen-grid sockets without difficulty in any type of radio receiver employing any size of screen-grid tubes.

Heavy wire is used in the cabling for the filament and heater circuits so as to minimize the potential drop occasioned by the heavier currents involved, and high-voltage insulation is employed for all conductors. All wiring cables are boiled in paraffin to prevent the absorption of moisture in humid climates with resultant insulation leakages.

Although the construction of a tester with push-button switches is more expensive than with a multi-contact rotary switch, the Diagnometer was designed with sturdily-constructed and heavily-insulated push-button switches because of the more rapid and safer operation assured. The push buttons are clearly identified by permanent lettering adjacent to the buttons on the panel.

Push-Button Circuit Control

Depressing a "Volts" push-button connects the "Multi-Meter" in series with the proper multiplier resistors as determined by the "Scale Selector" setting, across the radio tube circuit corresponding to the panel identification of the button. Depressing a "Mils." push-button places the meter, with the proper paralleled shunt as determined by the "Scale Selector" setting, in series with the radio tube circuit corresponding to the panel identification of the button.

The "Sp. Ch. Grid Volts" and the "Space Charge Mils." push-buttons are employed for testing R.F. pentode potentials and currents, and for tests of circuits which employ four-element screen-grid tubes as "space-charge" amplifiers. For all potential measurements, a toggle switch is connected to one side of the "Multi-Meter" and arranged so that the control-grid and anode measurements may be made either from the cathode or from the negative filament terminals of tube sockets, making the Diagnometer adaptable for all pentode tests, as well as all other tests. Two analyzing sockets are provided for the accommodation of five- and four-prong tubes.

It will be observed that an "A.C.-D.C." toggle switch is connected across the "Multi-Meter" movement for the purpose of adjusting the meter sensitivity for average pulsating and for direct current and potential values, and for root-mean-square (R.M.S.) values in alternating current and potential measurements. All alternating power specifications are usually in terms of "R.M.S." values as measured by ordinary service A.C. voltmeters. For resistance measurements, the "Multi-Meter" is most sensitive when this switch is in the "A.C." position. With this switch in the "A.C." position, the full-scale current of the "Multi-Meter" movement is 360 microamperes. The full-scale movement current is 400 microamperes with this switch in the "D.C." position.

The "Multi-Meter" and its shunts and multiplier resistors are separately calibrated and are interchangeable for replacement or service purposes. The "Multi-Meter" and resistor connections are shown in schematic form in Fig. 3; its power circuit is shown in Fig. 4. It will be observed that the "Multi-Meter" is not in any analytical circuit until a push button is depressed for the desired reading, thus affording a maximum of protection to the "Multi-Meter" at all times, and enabling the user to connect the meter for any desired test while observing the plate-current reading of the "Milli-Ammeter."

The separate 2-scale "Milli-Ammeter" is included in the analytical and tube-checking circuits for the plate-current readings which are indicated on this meter without requiring any switch manipulations other than depressing the "Lower Scale Mils." push-button for more discernible readings of plate currents less than the lower range of the "Milli-Ammeter."

This arrangement of the two meters provides simultaneous plate-current and potential indications, and eliminates the breaking of the high-voltage plate-circuits by switch action with consequent overloading of the filter systems of radio receivers.

Measuring High-Resistance Circuits

In the design of modern radio receivers, the use of high-resistance coupling circuits introduces errors in practically all voltage measurements, because of the "multiplier effects" of the resistors in the coupling circuits of such radio receivers. Furthermore, potential measurements will vary with different ranges of ordinary service voltmeters applied to high-resistance circuits, so that the voltage readings published by a radio manufacturer may be found quite different by the Service Man when analyzing with a voltmeter of the same sensitivity but of a different range from that used by the radio manufacturer.

Such differences are much less likely to exist in milliammeter indications, and these factors make it advisable to rely more upon *plate-current* and less upon voltage readings for indications of amplifier-circuit conditions. During the analysis of a radio tube-socket, a normal plate-current reading generally indicates that the proper potentials are applied at all terminals of the socket being analyzed, so that a more rapid analysis can be made of the radio by undertaking current measurements only.

When the manufacturer's data pertaining to a particular radio are not available, a radio man can determine from the tube manufacturer's data the plate-current specification for a particular type of tube for normal operating purposes.

The probable circuit defects corresponding to various plate-current variations are tabulated in the complete instruction booklet which accompanies the Diagnometer.

Speedy Servicing

In order that the reader may visualize the speed and flexibility of analyses with this tester, a typical analysis on a radio receiver is described. The radio is inoperative with a set of tubes known to be normal.

Beginning with the antenna stage, it is observed that the plate current of each R.F. and of the detector stage is found to be normal, and it is not deemed necessary to read any of the voltages, as *normal plate-current indications* usually *warrant the assumption that the applied potentials are correct.* However, it is found that there is an indication of "no plate current" in the first-audio stage.

Now, referring to the Diagnometer instruction booklet, it is observed that the most general causes of "no plate current" are: (1), open grid-bias resistor in cathode- (or filament-) to-ground circuit; (2), shorted plate bypass condenser; or (3), open plate-circuit.

With the Diagnometer, the continuity resistance of all of these circuits can be measured without removing the analyzing plug from the socket, by turning the radio off, and switching the "Multi-Meter" for the ohmmeter connections. Test probes now are connected to the ohmmeter pin jacks, and with one of the test probes touched to the chassis, the other is touched to the cathode contact of the unoccupied "Analyzing" socket of the Diagnometer. The "Multi-Meter" indication of the bias resistance is correct, let us say, so the first possible cause of "no plate current" is eliminated.

The test probe is removed from the cathode terminal of the socket and touched to the plate terminal. The "Multi-Meter" indicates "0" ohms, suggesting a shorted plate bypass condenser.

If the "Multi-Meter" had indicated "Inf." (infinity), the other test probe should have been removed from the chassis to one of the filament terminals of the rectifier socket to determine whether or not the plate circuit were open.

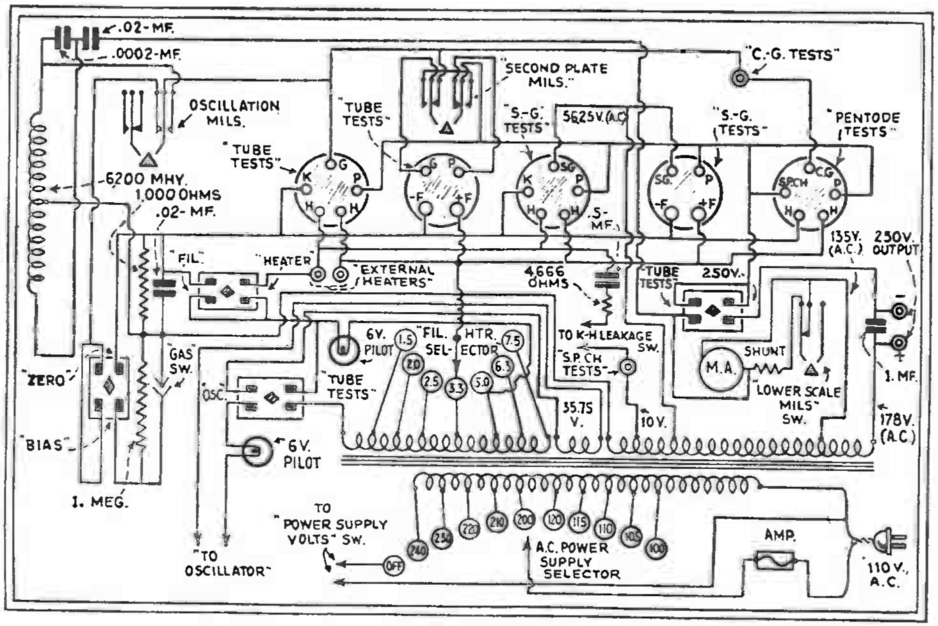

Fig. 5

Schematic diagram of the tube-tester incorporated in the Supreme AAA-1 Diagnometer.

Tube Testing

A 4½-volt flashlight battery is included in the tester (Fig. 5) for a comparative "grid-swing" test of tubes during analyses when radio power is utilized for the tube tests. This method is simple and has the advantage that noisy tubes may generally be detected "on the job." As a matter of fact, the "listening test" is the only practical service method for detecting noisy and microphonic tubes.

The Tube Tester

Service Men answering service calls often find, however, that the radio is completely inoperative, with the power supply from the power pack shorted or open circuited, so that the analyzer, which depends upon the radio power supply for its tube testing functions, is useless as a tube checker. Since customers usually expect an estimate of the cost of putting the radio back in operation, it is desirable that the Service Man have with him facilities for testing the tubes, so that he can include the cost of the necessary tube replacements in his estimate.

A tube checker which functions independently of the radio set is also advantageous in that it permits tests with predetermined power supply and circuit characteristics, so that "discard" limits can be established. Discard limits cannot generally be stated for tests from radio tube sockets because of the variations in circuit characteristics in different receivers or in different sockets of the same set.

Although reports of reliable radio service organizations indicate that less than 35 percent of service calls result directly from tube defects, some dealers have gained the impression from advertising estimates that 90 percent of radio troubles are due to this cause. This impression has brought about great interest in the comparative merits of tube-testing methods with a power supply independent of the radio chassis. Obviously, the most reliable method is that which most nearly approximates actual tube performance in the radio. Some very expensive tube testing equipment has been available for some time, and such equipment is probably capable of detecting 95 percent of tube deficiencies.

Some tube checkers which cost only about 10 percent as much as the more elaborate testers are capable of detecting about 90 percent of tube deficiencies. The Service Man must decide for himself whether his tube business warrants his investing five or ten times more money in an elaborate tester for detecting from five to ten percent more tube deficiencies than can be detected with a simple tube checker employing the principles incorporated in the AAA-1 Diagnometer, in which the alternating potentials applied to tubes during the tests are closely related to the potentials specified by tube manufacturers. All radio tubes in normal operation must respond to alternating or pulsating potentials, as all broadcast carrier waves and modulated signals have alternating characteristics. Power supply variations are compensated by a tap switch arrangement for voltage ranges from 100 to 120 volts and from 200 to 240 volts.

Mutual Conductance Test

Since the "mutual conductance index" method is the most reliable of simple tube-checking methods, the principles involved are incorporated in the AAA-1 Diagnometer tube checking facilities. In addition to this method of comparative tube checking, provisions are included for, (1) indicating cathode-heater leakages; (2) comparative indications of the gas content of amplifiers; and (3) for indications of the plate current of tubes during oscillation. These three additional tests are for comparative purposes only, and no definite discard limits are prescribed for them. Discard limits for the "mutual conductance index" tests are tabulated on the inside top cover of the Diagnometer case.

Cathode-Heater Leakages

The "buzzing" noise sometimes emitted from radio loudspeakers is generally caused by intermittent cathode-heater leakage in heater-type tubes. The effect of this tube defect varies with different radio circuits, being most noticeable where the cathode biasing resistance is utilized in the volume-control circuit with the heater circuit grounded. A short circuit between the cathode and heater elements of a tube will be indicated by an approximate full scale deflection of the voltmeter needle during the test.

All radio tubes are more or less "gassy," but it is generally desirable that the gas content of tubes be at a minimum, especially for resistance-coupled circuits, in which the grid current resulting from the gaseous condition will tend to reduce the grid bias of the tube by the voltage drop of the gas current through the grid coupling resistors.

It may be found that new tubes will be indicated as "gassy" when first tested with the Diagnometer, but that the gaseous condition is less noticeable after they have been in service a few minutes. It may also be noticed that old tubes, after having served their expected period of usefulness, will test as very "gassy." If they develop a purplish glow between the elements during normal operating conditions, they should be replaced. A purple glow is sometimes observed on the inside glass surface of power tubes, but this is quite natural and should not be interpreted as an indication of a detrimental gaseous condition. However, if the purple glow surrounds the filament, the tube should be discarded.

The matching of tubes for tuned R.F. stages with the Diagnometer is accomplished by subjecting the tubes to a test of their ability to generate oscillations in a circuit having constant values of inductance, capacity, resistance and power-supply potentials. This test affords a very practical means for accurately tabulating comparative meter indications of the general operative merits of tubes under dynamic radio-frequency operating conditions, in which variations in inter-electrode capacities are obtained.

SHORT-CHECKERS and PREHEATERS

Apparatus for Rapid Tests of Vacuum Tubes is Used by Manufacturers, Dealers and Service Men. Such Apparatus, With Methods of Preheating the Heaters of A.C. Tubes, is Described in this Article.

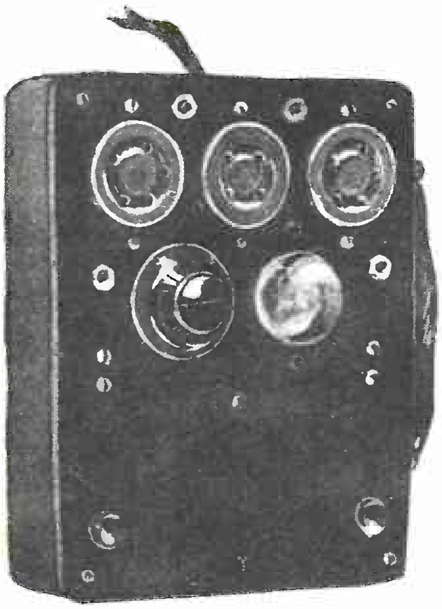

Fig. A
A simple short-checker and preheater.

IT is now standard practice with manufacturers of the better-grade tube-testing equipment to provide means for checking vacuum tubes for short circuits between elements as a preliminary to operating tests; and, in some designs, provision is also made for preheating the cathode type tubes.

It is the purpose of this paper to touch briefly on several practical means of making these tests and to describe and illustrate two working models embodying some of the principles discussed. It is not proposed to treat the subject in an altogether exhaustive manner. However, sufficient data will be given to enable any one to utilize such equipment as may be available in the design of a really practical test unit.

A few general considerations will not be amiss as a prelude to actual detailed discussion. To begin with, any short-testing device is essentially a form of continuity test, and any device suitable for this purpose can be adapted to the checking of vacuum tubes for shorts between elements.

Due however, to the need of a relatively simple and inexpensive arrangement, as well as one of reasonably high sensitivity, the number of really practical arrangements is limited to comparatively few. The need of a reasonably high order of sensitivity comes about by reason of the occasional existence of partial shorts and leakage paths between elements (such as cathode to heater) and for this reason such devices as flashlight bulbs, electric lamps, or any device requiring comparatively high current for its operation are less effective than a more sensitive arrangement, such as a neon lamp, or a high resistance voltmeter (or its equivalent, a low range milliammeter with a series resistor appropriate to the meter range and test voltage used).

A further consideration is the desirability of testing certain tube types for shorts "hot," that is, with correct voltage applied to heater or filament terminals. This is particularly true of the cathode type tube and it is the writer's experience that in many cases shorts and leakage absolutely fail to show up with tube "cold." This point seems to have been entirely overlooked in some commercial designs.

A Neon Tube Short-Tester

Figure 1 shows an arrangement which is quite flexible, inasmuch as it can be adapted to the use of either neon lamps or six-volt dial lights as indicating devices. In the event of using the neon lamp, the windings on the transformer (sec. Nos. 1, 2, 3, 4 & 5) should be 110 volts. If six-volt dial lights are used, the windings will of course be six volts. Note the fact that the ends of each of these windings are designated plus (+) and minus (—), respectively, which simply means they are connected series aiding with the indicating device placed in the connecting lead, as shown. It is quite essential to follow these exact connections. The same circuit could be used with 1.5-volt uni-cells in place of secondary windings 1, 2, 3, 4 & 5 (observing same polarity) with a 1.5-volt flashlight bulb in place of the neon lamps or six-volt dial lights. This, of course, in event A.C. is not available.

If using neon lamps for indicators and testing the tube "hot," it will be convenient to insert a 0.5- to 1-mf. condenser in series with each tube element as shown by dotted lines. The reason for this will be discussed later during the description of Figs. 4 and 5; also some data as to the best type of neon lamps to use will be given. Note the termination of filament leads, at the left of the drawing, with "XX." This practice is also followed in Fig. 2 and complete explanation will be found in Fig. 3 and its associated text. If desired, a chart to indicate the exact elements shorted can be worked out along similar lines to that shown in connection with Fig. 2.

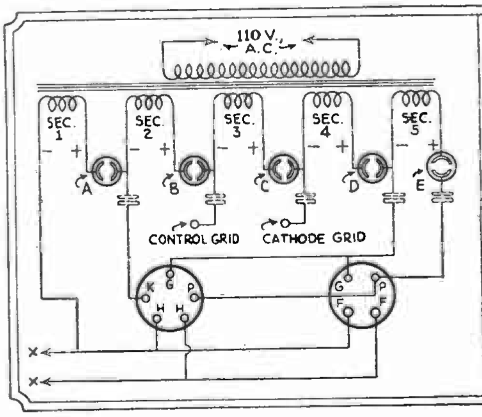

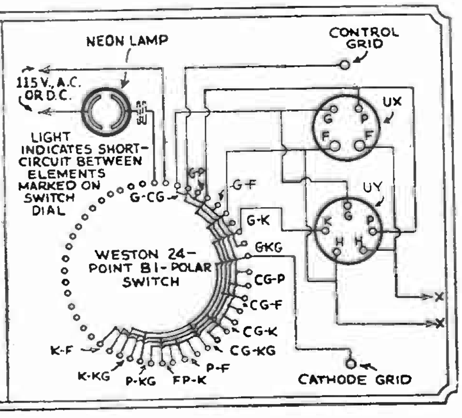

Fig. 1, left. *A simple short checker using five neon lamps and no switches.*

Fig. 2, right. *A short checker using one neon lamp and a rotary switch.*

Another Type of Tester

Figure 2 was lifted bodily from a booklet distributed by Weston Electrical Instrument Corporation entitled "Uses of Electrical Instruments for Radio Testing." The only changes being the before-mentioned filament circuit termination "XX" to the right of the diagram, and the addition of the dotted lines indicating possible insertion of a condenser of 0.5- to 1 mf. in value as mentioned in Fig. 1 and explained in detail in Figs. 5 and 6 and the accompanying text.

This condenser is only used in event it is desired to test the tube "hot" and then only in conjunction with a neon lamp and A.C. The "code," or chart, to indicate the exact elements shorted is given as an example of similar charts for other circuits also.

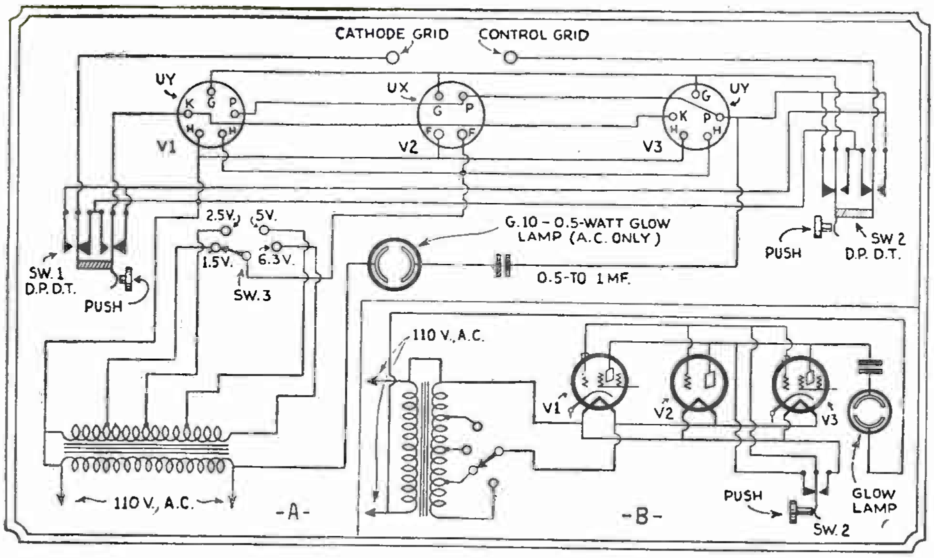

Fig. 4

The diagram of the short-checker and preheater illustrated in the photographs. Switches SW1 and SW2 operate the entire unit.

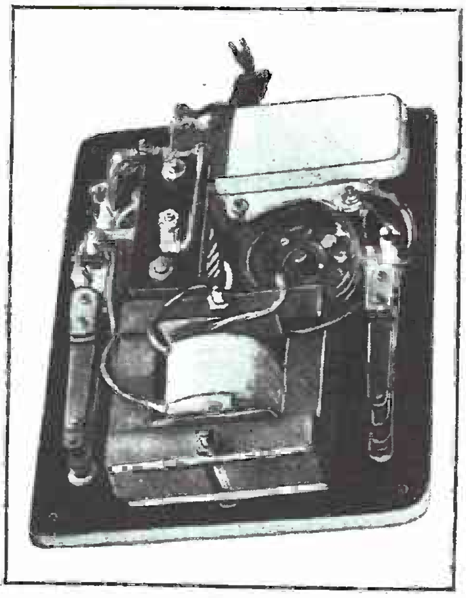

Fig. B

An under-view of the tester illustrated in Figs. A and 4. Observe the simplicity.

G-CG—Grid-Control Grid
G-P—Grid-Plate
G-F—Grid-Filament
G-K—Grid-Cathode
G-KG—Grid-Cathode Grid
CG-P—Control Grid-Plate
K-KG—Cathode-Cathode Grid
CG-F—Control Grid-Filament
CG-K—Control Grid-Cathode
CG-KG—Control Grid-Cathode Grid
P-F—Plate-Filament
P-K—Plate-Cathode
P-KG—Plate-Cathode Grid
K-F—Cathode-Filament

Like Fig. 1, this circuit is also rather flexible, as it is possible to insert any other type of indicating device in place of the neon lamp, such as a dial light and dry cells, or an A.C. or D.C. voltmeter, etc., leaving out the series condenser in any case where other than a neon lamp and 110 volts A.C. are used. The neon lamp is simple, sensitive, rugged and inexpensive however, and is recommended.

In using any arrangement of this circuit other than the neon lamp and 110 volts A.C., it is recommended that the tube be checked with the filament or heater "cold," which limits the arrangement of the filament connections to that shown in either Figs. 3A or 3C.

Filament Connections

Figs. 3A, 3B and 3C show three practical types of filament connections, as illustrated in Figs. 1 and 2 and designated "XX" in each case. In many short-checking devices the practice is followed of putting a jumper across the filament as shown in 3A and this is O.K. if the short-check is made with the filament "cold." 3B illustrates a preheating arrangement and when this is used, the tube is checked "hot." Fig. 3C shows a method of checking for filament continuity which can be used in conjunction with practically any short-checking circuit desired. However, in connection with Fig. 2 it would be simpler and just as satisfactory to return the filament leads to two terminals on the bi-polar switch next to those marked K-F, or to any of those that are blank or unused, and thereby use the same neon lamp used as short-indicator to indicate filament continuity. Of course, other variations of heater connections are possible and one of them is shown in the arrangement of Fig. 5.

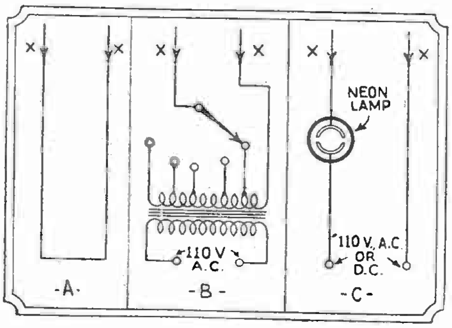

Fig. 3

The above three diagrams illustrate three methods of connecting the heaters of tubes to be tested.

A Short-Checker and Preheater

Fig. 4 shows the diagram of an interesting short-checker and preheater and Figs. A and B show the external and back of panel views. A satisfactory portable tube-tester was already available, but was not provided with means for preheating or checking for shorts and such a device of small size was desired to use with it. This is an age of "Midgets" so why not a midget short-checker and preheater?

This checker was accordingly built up on a 5⅜ x 6⅞ in. panel, and contained in a case 1⅝ in. deep inside and has proven very satisfactory. Note that two D.P.D.T. push type switches serve to connect the various tube elements to the plate and to the filament of the tube under test in turn, and in various combinations. It is not usually important to know the exact elements between which a short exists as a short between any of the elements renders the tube useless.

The two switches mentioned are designated SW1 and SW2 in the diagram and they need only be pushed in turn (not together) to indicate every possible short in the tube. The reference points (or points of connection for the two sides of the test circuit) are the plate and filament respectively, and as stated the two push switches serve to connect the remaining elements in turn to the plate and to the filament circuit in proper combination to indicate all shorts.

Switch SW3 adjusts the filament voltage to any one of four values, and the range of voltages shown is sufficient as it is permissible to make such tests at slightly less than rated filament potential where the tube requires intermediate or higher values than those shown.

Some types of tubes burn so dimly as to make it difficult to determine whether they are lighted or not, and if a test of filament continuity on these types is considered essential, it is suggested that the circuit be altered to the extent shown in Fig. 4B. This simply involves adding a S.P.D.T. push or toggle type switch, which in the normal position completes the filament circuit through the filament switch and when thrown to the other position checks filament continuity on the same neon lamp used for the short-check.

The Neon Lamp

Note that the neon lamp is specified as G10-0.5-watt A.C. only. This is the standard designation used by General Electric Vapor Lamp Company of Hoboken, N. J. If the 0.5- to 1-mf. condenser is used in series with the neon lamp, as shown, it is possible to use other types of neon lamps. If the condenser is omitted, it is absolutely necessary to use the above type lamp in order to permit the tube being tested "hot," as otherwise the neon bulb will glow even though no short exists. This is due to the rectified plate current. However, using the type lamp specified, only one of the two electrodes in the lamp will glow as the electrodes are polarized, the glow taking place on the negative electrode, and as the normal rectified plate current is a pulsating D.C. current, partaking of some of the characteristics of both the A.C. supply and also D.C., the one electrode glows though the lamp is ostensibly responsive to A.C. only. This may not be objectionable to the user as no short exists unless both electrodes glow, which they will do when A.C. is impressed across the lamp due to a direct tube short.

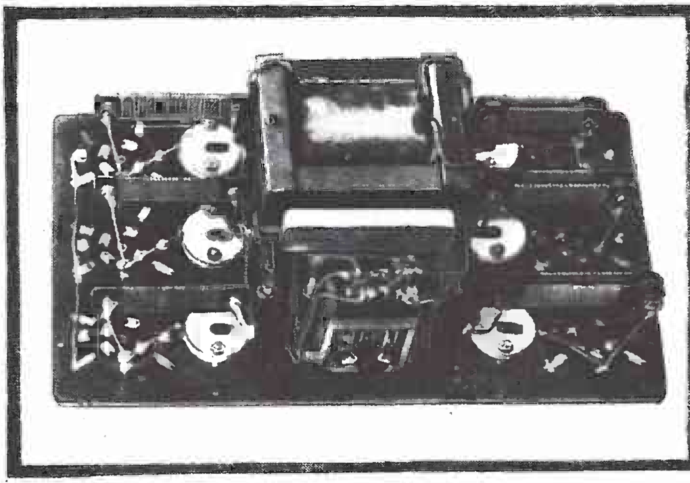

Fig. D. *Internal view of the short-checker and preheater.*

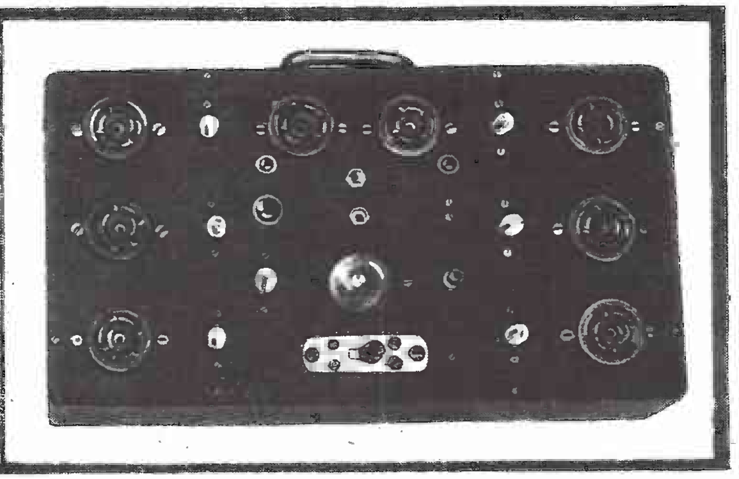

Fig. C. *Outside view of the tester described by the author.*

It is considered best, however, to use a series condenser as then there is no glow, except for the first few cycles of A.C. supply after the tube is placed in the socket. This shows as a brief flash of the neon lamp as the condenser charges and, if the condenser is high grade and does not leak, no more current is allowed to flow. This is especially convenient in checking cathode to heater leakage because if the neon lamp were allowed to glow on one electrode, this leakage would be "washed out," or obscured, as it were. Some care is necessary in deciding when a cathode to heater leakage is excessive. In the writer's experience, some makes of tubes are much worse than others in this respect. It may be of assistance to know that the type of neon lamp specified will glow at full brilliancy with approximately five milliamperes of current flowing and if the neon lamp should glow with more than a very slight or faint degree of brilliancy, the tube should be considered as either "leaky" or "gassy" and if the neon lamp glows with anything approaching full brilliancy, the tube should be considered shorted.

Reference has been made, in the discussion of Figs. 1 and 2, to the specified type of neon lamp and to the series condenser, and if the tube is tested "hot" using A.C. supply, the same rules apply as above. It is a good idea, in using any short-checking device, to tap the tube several times during the process of checking in order to better detect intermittent shorts.

As stated before, the circuit of Fig. 2 can be adapted to either 110 volts A.C. or D.C. If using A.C., use the type of neon lamp specified above, but if using D.C., it will be necessary to use a type of neon lamp responsive to D.C., such as G10—1 watt for A.C. or D.C. and in this case, as mentioned before in discussing Fig. 2, it is best to check the tube "cold."

A peculiarity of the neon circuits shown in Figs. 4 and 5 should be mentioned. In switching the test circuits from one set of connections to another with filament or heater "hot," a brief flash of the neon lamp may take place, but this should be disregarded as it is caused only by disconnecting a tube element from a portion of the circuit which is at one potential and connecting it to a portion of the circuit at a different potential with respect to the previous one.

ALL that has been said about the type and characteristics of the neon lamp and the use of the series condenser in discussing Fig. 4 applies with equal force to Fig. 5 and will not be repeated.

The circuit in Fig. 5 was built up in a 6½-in. x 11½-in. x 3½-in. box for counter or bench use and can be built up separately or in combination with a regular tube tester as desired. Figs. C and D illustrate the exterior and back-of-panel views of this checker. It will be noticed that the short-checking arrangement is the same as used in Fig. 4. Instead of using two push-type switches, however, as in Fig. 4, the switch used, and designated as S1, is a Federal No. 1424 anti-capacity switch.

This switch was originally a four-pole, double-throw affair with an "off" position in the center, and was altered to the extent of bending four of the round contact members so as to make contact with the four flat members in the center position. When thrown to the left, two of these four contacts are broken and two others made in their places and the same is true when the switch is thrown to the right; thus making, in effect, a pair of double-pole double-throw switches actuated by a single lever and constituting essentially the same arrangement as is used in Fig. 4.

Two so-called "clearance sockets" are shown in the center of the diagram and these are used in conjunction with S1 for checking tubes for all shorts, the remaining six sockets being arranged to preheat three of each of the 2.5-volt and 6.3-volt cathode-type tubes, and check them for heater continuity or intermittent heaters.

Switch S2 is a single-pole double-throw affair for checking filament continuity on four-prong and five-prong filament-type tubes. Normally, it places a jumper across the filament connections for the usual short tests but, when pressed, joins one side of the filament to the plate for a filament continuity check using the same neon lamp for this purpose as for the short check.

Switch S3 is the A.C. line switch and needs no further comment.

The Transformer

The filament transformer specified for this circuit has a 10.5-volt secondary tapped at 4.5 volts. These values are based on a line voltage of 110. The 4.5-volt winding supplies the 2.5-volt tubes through 2-ohm, 10-watt resistors shunted by Mazda "41" 2.5-volt dial lights, designated A, B and C

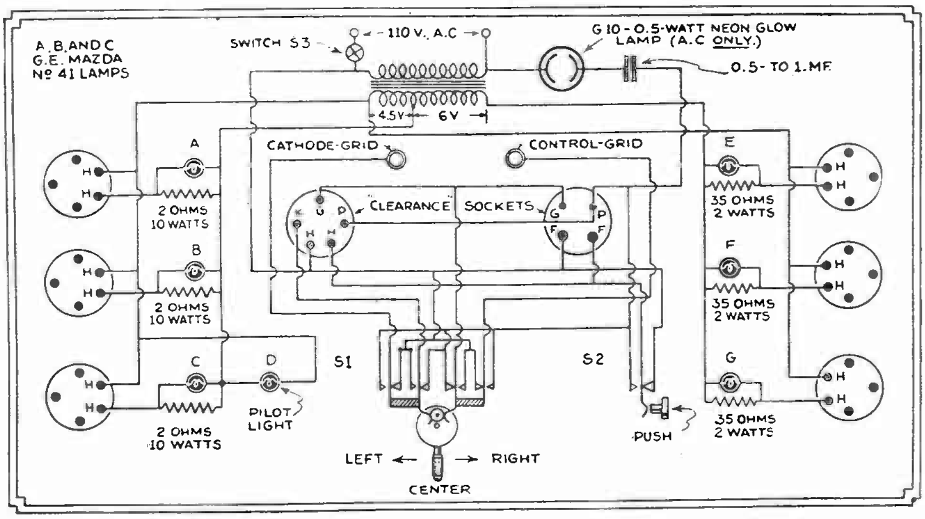

Fig. 5

Diagram of connections of the completed short-checker and preheater. An anti-capacity switch is used to test for shorts between elements of the tube. This diagram should be compared with that of Fig. 4 in Fig. 5, and the voltage drop across this combination is approximately 2¼ volts, leaving a like voltage drop across the heater of the tube. The 10.5-volt tap supplies the 6.3-volt tubes through 35-ohm, 2-watt resistors, each shunted by a Mazda "40" 6-volt dial light, designated E, F and G in Fig. 5, and the 10½ volts are approximately divided between the dial-light-resistor combination and the tube under test. The voltage values specified allow a rise in line voltage to 125 volts before tubes or dial lights are operated at maximum allowable voltage.

The transformer used for this purpose should be capable of supplying about 25 watts on the 4.5-volt winding and an additional 10 watts on the 10.5-volt tap, making a total primary wattage rating of around 45 to 50 watts allowing for loss in the transformer. This transformer was designed and wound for the conditions enumerated, but constructional details are beyond the scope of this article.

Some Service Men will be able to design their own transformers, others will have them wound, and still others will possibly use transformers with higher voltages, such as two 5-volt or one 5- and one 7½-volt secondary, and will make necessary changes in the resistance network to accommodate the circuit to changes in voltage, the change in resistor values depending on the voltage drop required. Any added resistance must be placed just *before* or *after* the present resistor-and-lamp combination, however, and not added to the present resistor shunted by the lamp, as these values have been properly proportioned for the current flowing and the type of dial light used. Be sure to use the types of dial lights specified in order to get correct results.

It is evident by now that the writer is somewhat partial to the use of the neon lamp for short-checking and is also in favor of checking tubes "hot," though due mention has been made of other methods. Checking for shorts with the tubes "hot" introduces some peculiar phenomena of which mention has already been made, but it is a more accurate check when properly used and understood, even though somewhat more involved or complicated than a "cold" test. Suit yourself, as either is very good.

Development of the Set Analyzer

The development of the commercial set analyzer, as previously stated, has extended through a period of years. Naturally, with the very simple receivers of a few years ago, all that was necessary to analyze a set completely was an arrangement for measuring merely the plate voltage and the plate current; since some of the receivers did not even use a "C" bias.

With the advent of the high-vacuum tube, the use of "C" bias on amplifiers became necessary. With regard to the analyzers, this meant a change in their design, which would facilitate the measurement of the grid voltage. Some designers of analyzers even went so far as to provide a means of measuring, not only the grid voltage, but also the grid current. This step represented a distinct advancement in the design of analyzers.

The superheterodynes by this time had grown increasingly popular; with the result that external modulated oscillators were found necessary, in order to conduct an intelligent investigation of the characteristics of this type of receiver. Three frequencies are necessary: the oscillator frequency; the signal frequency; and the intermediate frequency. However, occasions arise when the Service Man is not able to utilize a broadcast station, or the receiver's own oscillator output to intelligently "line up" a receiver of this type. This meant that superheterodynes could not be adjusted for maximum efficiency in the home of the customer, but had to be brought to the service stations; where the necessary facilities were to be had. Also, an output meter was necessary. Only the more elaborate service stations then boasted of vacuum-tube voltmeters which are now such common apparatus in any up to date service station. The cost of this equipment was necessarily large; a condition due mainly to the limited demand among the servicing profession.

The earliest analyzers, many of which are still in use (with various attachments prompted by the ingenuity of the Service Men who own them, and of the manufacturers of adapter plugs) were designed for battery tubes only. The appearance of the heater-cathode tube, with its 5-prong or UY base, at once worked a revolution in analyzer design: additional problems of this nature have again been lately brought up by the popularity of the pentode, with its additional element. In addition to this, the alternating-current set at once necessitated the incorporation of A.C. meters for filament- and transformer-voltage measurements. How ingeniously the multiplied demands on the modern set analyzer are being met, by the use of special switches, adapters, rectifiers, etc., will be most instructively evident by a study of the following pages; which reproduce the manufacturers' diagrams of the arrangements followed in their latest test equipment.

With the increasing complexity of receivers, and the close competition in the service field today, one of the first requisites in a commercial analyzer is the reliability of its operation. Since intermediate frequencies are now standardized at about 175 kilocycles, the more expensive analyzers now have incorporated in them thoroughly-shielded oscillators, to permit rapid and accurate testing of the I.F. stages. This feature can be appreciated only when you attempt to line up I.F. transformers by using a broadcast signal and the oscillator in the receiver; the results, even then, are never known to be accurate, since it is perfectly possible for the oscillator condenser to be mis-aligned, so that the intermediate frequency is, for example, 160 kc. instead of 175. When the I.F. transformers are then adjusted for greatest response, they will be tuned to only 160 kc., and their efficiency will not be maximum.

If, on the other hand, we apply a frequency known to be 175 kc. to the I.F. amplifier, and then adjust the latter for maximum response, we are sure that the final result will be independent of any mis-alignments in either the oscillator or R.F. stages.

The majority of analyzers also have become equipped with output meters, which may be used for so many purposes (such as adjustment and alignment of receivers; hum measurements; determination of signal-to-noise ratios; determination of phonograph-scratch frequencies, etc.) that it should be now considered an indispensable part of the equipment of the modern Service Man.

An increasing number of new tubes have also made their appearance on the market. Socket connections have been changed and new types of sockets have been added; all of which require, for best results, that engineering skill be brought into play in order to design a single piece of equipment which may be used by the Service Man and will enable him to make a rigid test on any type of receiver, using any type of tube.

It is now possible for the Service Man to bring into the home of a customer a complete laboratory, all in one case, which gives him the same facilities in the field that he obtains in his own shop.

Since space does not permit a list of all the analyzers, both past and present, that are available on the open market, we reproduce in the following pages a description of the latest instruments of the leading manufacturers; from which the Service Man is sure to obtain a complete picture of the analyzer field as it is today.

The Design of a New TUBE TESTER

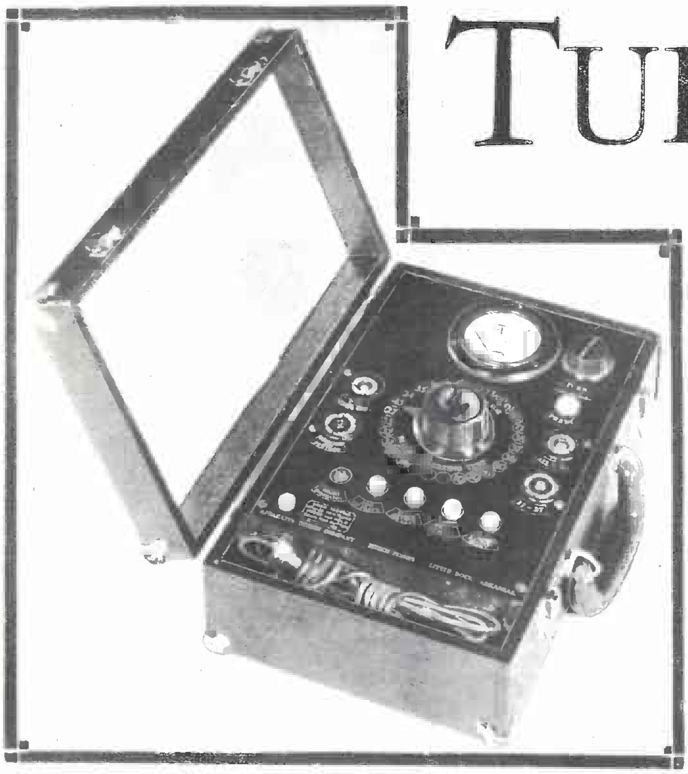

●

First published description and diagram of the newest type of tube tester. It indicates directly in words the relative merit of every type of tube on the market.

●

Fig. A
The Confidence "English-reading" Tube Tester

UNIQUE in the field of test equipment is the tube checker illustrated in Fig. A. A schematic diagram of the instrument, simplified for easy reference, is shown in Fig. 1. Its outstanding feature is its "English-reading" indication of the worth of a vacuum tube in terms of "good," "bad," or "gas." To better appreciate the superiority of this type of test unit, let us gloss over past history.

Early types of tube checkers met the requirements of five or six years ago by furnishing only a "plate current" indication; the meter indications were checked against a table of evaluations for satisfactory characteristics. Increased public interest in the tube's inherent bearing on tone, volume, sensitivity, and selectivity resulted in the development of "oscillation" testers which gave a better indication of merit. Lately, "mutual conductance" (zero set) tube checkers have been offered as portable equipment for the Service Man; and as "counter" models for the mutual reference of the radio dealer and his store trade,—still, however, requiring the use of a reference table for correlating meter readings and desirable tube characteristics.

To most of the tube-buying public, these figures were just so much Greek; and while impressive, they were not convincing. It was to provide a more simple device that would be "plain English" to the customer, that the "Confidence," Direct-Reading Tube Tester was developed; its single meter scale indicates the suitability of a tube in words, —"good," "bad," or "gas."

Although design work on the "Confidence" tube tester was started in 1928, it was some time before all the "bugs" could be ironed out;—since there is considerable complexity to the multi-shunt switching mechanism necessary for successively applying the correct potentials to each type of tube solely by rotating a single knob.

One Meter—Four Sockets

In this type of instrument four sockets are used, into which all known tubes are inserted according to their connection requirements. This means that all 4-prong UX tubes such as '10, '50, '81, '71A, '12A, '01A, '00A, '20, '99, '45, '31, '30, '26, '82B and '83 are inserted in one socket; and other types in the remaining three sockets.

Assuming it is desired to test a '99 tube, the one selector knob of this multi-shunt device, is turned to the position marked "99," and the tube placed in the UX socket. Two buttons are pressed; one reading "Grid Action" and the other "Plate Action." If the

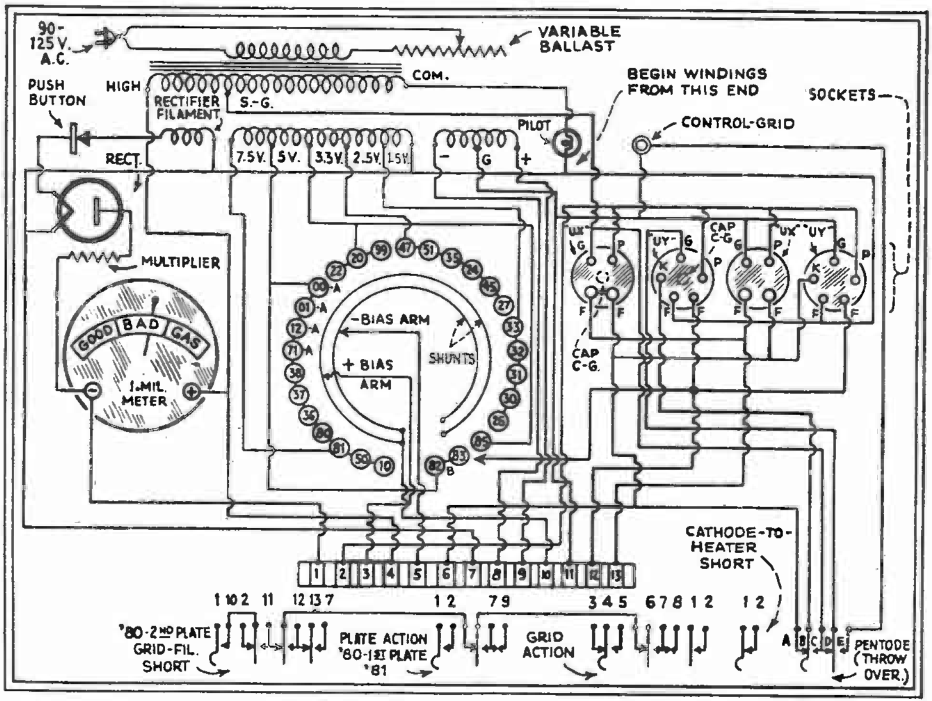

Fig. 1

Schematic circuit of the 'Confidence" Tube Tester. Two sets of resistors, represented by the lines marked "shunts," adjust the circuit for correct test of any type of tube.

tube is normal the meter reads in the center of "GOOD' for both tests. If one or the other button test reads in the "BAD" section or in the "GAS" section, it indicates the tube may have misplaced elements, incorrect plate impedance, incorrect emission, incorrect space-charge properties, or ionization from the presence of gas. This same interpretation will be given for a '50 or any other UX tube placed *in the same socket,* the only operation required being the turning of the selector knob to point to "50," or any other number that corresponds to any other type of tube under test.

Tubes having high mutual conductance will read higher in the "GOOD" section, until a point is reached where the tube is not high mutual conductance, but has gas content. The meter then reads in the "GAS" section.

This instrument will also indicate on one jeweled pilot lamp all plate or screen-grid to control-grid, filament or heater shorts immediately the tube is inserted in a socket. If the test buttons should be pressed when such a shorted tube is in the test socket, or if the tube is shorted from plate or screen-grid to cathode, it will not injure the indicating meter, (but the pilot lamp will light or remain lighted).

Rectifier tubes such as the '80 and '81 and all screen-grid and pentode tubes are tested in the same manner.

Voltage Ballast

To secure this simplicity it was first necessary to design an electrical circuit for placing separate meter shunts and tube voltages in proper relation when the one selector knob was moved; to provide means for adjusting the transformer to different line voltages; and to indicate the proper setting, and all at minimum cost in apparatus. These conditions were met by using a rectifier tube and marking the meter scale at a determined point. Thus, when the input voltage is to be adjusted, a button is pressed, connecting the rectifier into the meter circuit and if the needle of the meter does not point to the mark, the ballast control knob is to be adjusted.

The transformer output current at certain voltages at times reached high limits, due to short circuited tubes creating a completely closed circuit, which, if the current was not held within definite limits, would destroy the shunts, burn out the current-limiting pilot and injure the meter. Also, the transformer current and voltages had to be held to close limits in order to maintain constant values on the 56 different meter shunts; and to control the meter calibration.

The main problem encountered in this respect, after transformer design, was the effect on the input current by use of the usual variable resistance or "ballast" in series with the primary. With the definite output limitations, a variation of line voltage would necessitate adjustment of the ballast, which in turn would alter the amount of resistance in the series circuit. This variation of resistance would effect the current input and in turn effect the output current—a "vicious cycle."

To overcome this defect, the ballast was discontinued and the transformer primary tapped to a rotary adjustment switch, but the same mechanical operation was retained. That is—the adjustment of line voltage requires pressing a button to throw the rectifier in circuit and then turning the small knob to bring the meter needle to the mark. This operation is required only where line voltages vary. (For convenience, the "ballast" type of control is illustrated in Fig. 1.—*Technical Editor.*)

It was then found necessary to slightly alter the shunting system to make any variation in tube test reading correspond proportionately only to the variation in line voltage.

Improving the Weston "537" Analyzer

LIKE a great many other Service Men, the writer was extremely proud of his Weston "537" Analyzer when it was *the* analyzer, but now when it is necessary to use a half-dozen adapters to test as many tubes—and this is done on almost every job—it is readily apparent that a great deal of time is consumed changing and selecting the correct adapters, to say nothing of the extra space taken up and the limited range of tests that can be carried out with adapters.

It was with these thoughts in mind that the writer altered his instrument so that it will test all filament, control-grid, plate, cathode, screen-grid and space-charge-grid voltages as well as plate current. In other words, the present-day tubes such as screen-grid, variable-mu and pentode tubes can be tested without the use of adapters.

As is apparent by reference to Fig. 2, a grid test on screen-grid tubes, a reversing switch for the volt-milliammeter and a volt return switch have been added.

The reversing switch is necessary to secure an up-scale deflection of the meter on "A" voltages, cathode voltages and grid voltages. The "VM Return" switch is used to connect the meter return circuit of the plate and grid circuits to either cathode or "F—." The cathode connection is used on ordinary tubes, and the "F—" is used in testing pentode tubes.

Shopping around for parts that would fit in the available space required considerable time. The grid test for screen-grid tubes is an ordinary Yaxley push-button jack switch of the S.P.D.T. variety. This is placed in line with the other two push-button switches in the lower left-hand corner of the panel, and lengthwise with the bottom edge, Fig. 3A. (A piece of the triangular block in the carrying case will have to be chipped out in order to allow clearance for the leaves of the switch.) To bring the sixth wire into the analyzer, use the new "Na-Ald" analyzer plug handle with the locking feature, Fig. 3B.

Now for the reversing switch. A Hart and Hegeman D.P.D.T. toggle switch is just the thing. However, the writer made one from several old jacks as shown in Fig. 3C and mounted it between the "4-8 volt" and "MA" toggle switches. The "VM Return" switch is an ordinary S.P.D.T. toggle switch, and is placed in the upper right-hand corner of the panel; the entire triangular block in the carrying case must be chipped out.

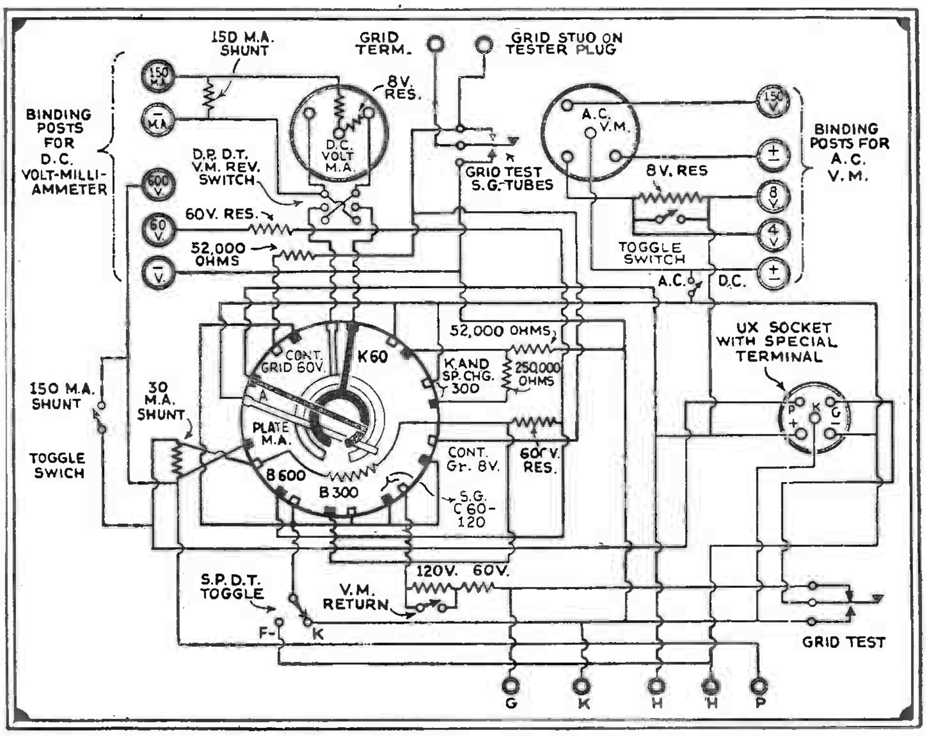

Fig. 2

Schematic diagram of the improved Weston 537 analyzer. It is now able to test practically every type of tube available.

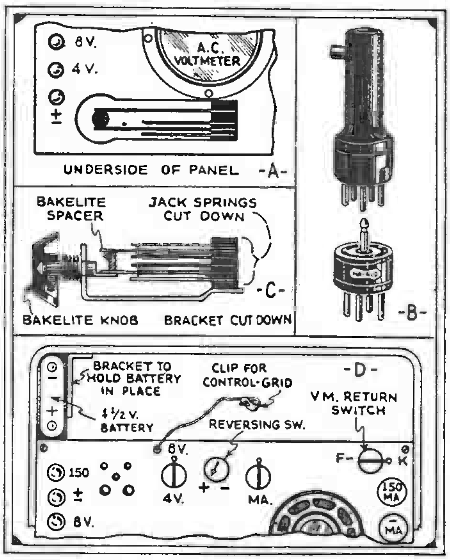

Fig. 3

Detail views of the author's tester.

The resistors used to obtain the additional voltage ranges are of the pigtail type, and of 2-watt capacity. The 52,000-ohm resistor of the “control-grid 60-volt” scale can be eliminated by using the 60-volt resistor connected to the “60-volt” binding post. If this is done, it will be necessary to set the bipolar switch at “control-grid 60” and to reverse the meter, when using the “60-volt” binding post for tests.

After these changes are made, place a 4½-volt “C” battery in the rear compartment of the carrying case as shown in Fig. 3D, and connect a short lead from the positive post of the battery to the “8-volt” binding post of the A.C. meter. By connecting one of the test prods to the negative side of the battery, and the other to the “plus-minus” post on the A.C. meter, a low-ohmic continuity tester results; by removing the test prod from the “plus-minus” post and connecting it to the “-MA” binding post and setting the switch dial to read “A volts,” a 1000-ohms-per-volt continuity tester is obtained. In the latter position, the following ohmmeter readings, with a 4½-volt battery, are secured:

Resistance	“8-volt” scale
0	4.50
500	4.23
1000	4.00
1500	3.79
2000	3.60
2500	3.42
3000	3.27
3500	3.13
4000	3.00
4500	2.88
5000	2.77
6000	2.57
7000	2.40
8000	2.25
9000	2.11
10000	2.00
15000	1.56
20000	1.28
30000	0.94
40000	0.75
50000	0.62
75000	0.46
100000	0.33

Also, the 150-volt A.C. meter can be used as a “microfarad meter” by connecting one side of the 110-volt line direct to the meter, and connecting various condensers in series with the other side of the line.

Dayrad “Type 880” Set Analyzer

The “Type 880” Radio Set Analyzer is complete and ready to use. A set of test prods is included; the necessary adapters for all types of sockets are attached to the Analyzer’s cable plug.

The Analyzer consists of: two meters, one for A.C. and the other for D.C. measurements; three switches (one with 17 positions, called the Selector Switch; one with 3 positions for changing the A.C. Meter ranges, called the A.C. Meter Switch; and one with 3 positions for changing the output ranges, called the Output Meter Switch); 12 push-button switches (8 locking type; 4 nonlocking type) all properly marked; twenty-five tip jacks, all properly marked; a battery compensating rheostat for use with the Ohmmeter, called the Compensator; a cable and connecting plug, called the Analyzer Plug; and its associated adapters, distinguished as the UX and UV Adapters; and a 4½-volt battery.

By setting the Selector Switch at the extreme left, the following readings may be obtained, in sequence.

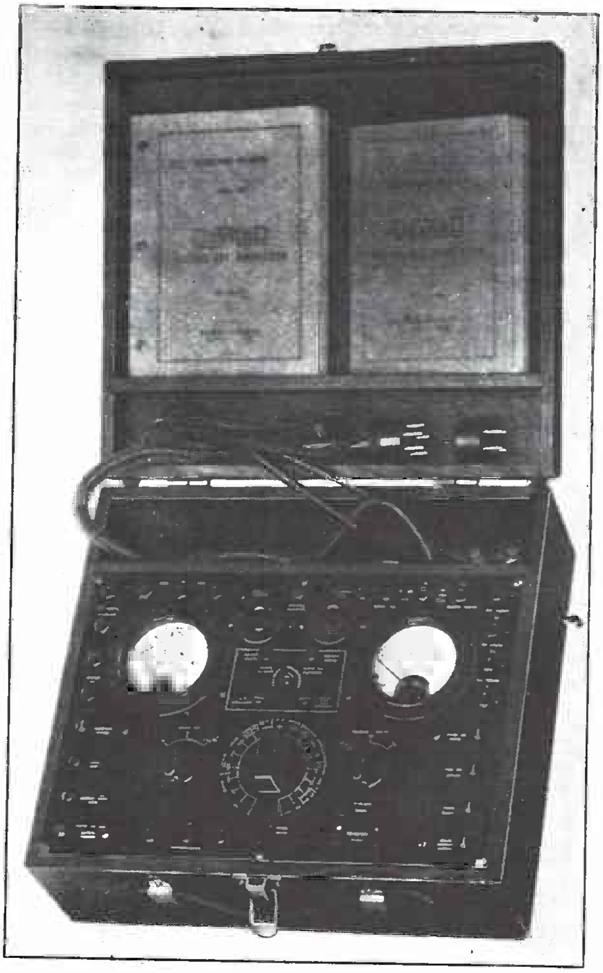

(1) Plate M.A. — Three Ranges, 5-25-125 Milliamperes.

(2) Plate Volts—Three Ranges, 125-250-500 Volts.

(3) Second Plate—’80 Rectifiers — 125 Milliampere-Scale only.

(4) Screen-Grid Current—5 Milliamperes.

(5) Screen-Grid Volts — Two Ranges, 125-250 Volts.

(6) Control-Grid Volts — Three Ranges, 125-50-5 Volts.

(7) Cathode Volts — Two Ranges, 125-25 Volts.

(8) Filament Volts A.C. — Three Ranges, 4-8-20 Volts (also A.C. Meter Switch).

(9) Filament Volts D.C.—5 Volts.

In making a circuit analysis it is necessary, in order to obtain a meter reading, to press one of the “Read Meter” Buttons. Three of these are provided: the first, “Read A.C. Meter,” is located to the left and below the A.C. Meter. The second and third are the “Read D.C. Meter” and “Reverse D.C. Meter,” which are located to the right and below the D.C. Meter. The “Reverse D.C. Meter” button is used only in cases where the cathode is at a positive instead of a negative potential with respect to the filament.

When testing amplifier circuits, the “Grid Test” button should be depressed after the first reading of plate current is obtained. This button shifts the grid voltage and, usually, gives an indication of the value of the mutual conductance of the tube.

For measuring screen-grid tubes, the button marked “Screen-Grid Analysis” must be depressed and locked when analyzing their circuits. Its purpose is to rearrange connections in the Analyzer so that the control-grid circuits and the screen-grid circuits will fall in the proper positions for test. The control-grid connection in the set must be connected to the tip jack marked “Control Grid” by means of the short connecting lead which is supplied with the Analyzer. **Always release this button when you have finished analyzing circuits using screen-grid tubes.**

Pentode output circuits, employing the type-’38 tube, have terminal arrangements identical with those of heater-type screen-grid tubes (’24, ’35, ’51); and analysis is therefore performed on these circuits exactly as if a screen-grid type were under test.

For all other types of pentode tubes, it is necessary to press the “Pentode Analysis” button before taking readings.

Rectifier tubes of both the ’80 and ’81 types may also be tested in a manner similar to that for other tubes. The total secondary A.C. voltage from the power transformer may be measured by pressing the button marked “A.C. 800 Volts—Plate to Grid”. The voltage from one of the plates, of the ’80, to the filament may be measured by pressing the button marked “A.C. Volts—Plate to Filament”.

As in all other analyzers, provision is made to use both meters with any scale desired for external purposes.

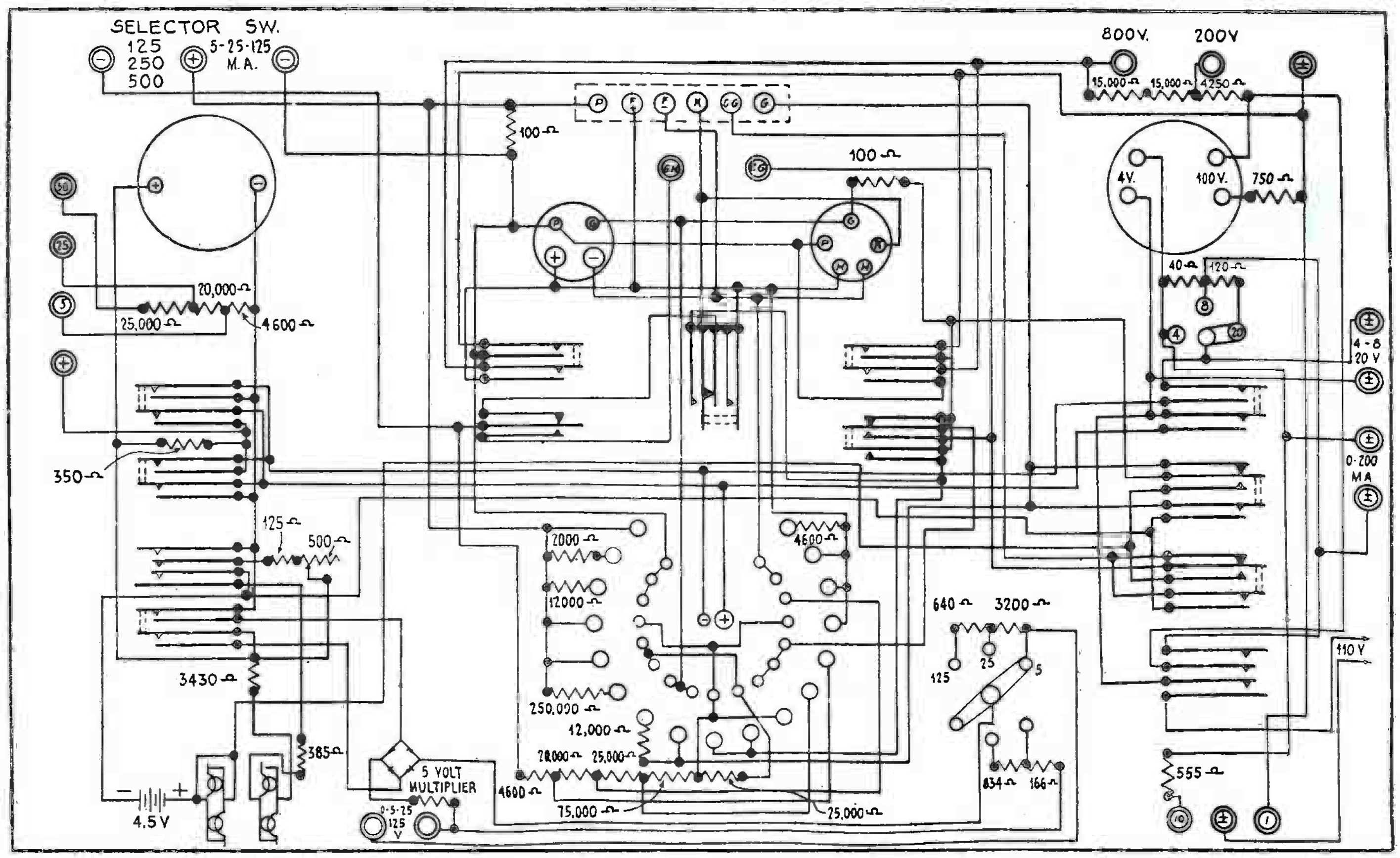

Schematic Circuit of the DAYRAD "TYPE 880" Set Analyzer

A very useful arrangement is the use of the A.C. meter to read A.C. milliamperes. This is accomplished by removing the multipliers from the circuit of the A.C. meter (by means of a switch marked "A.C. MA Microfarads"); in this manner up to 200 A.C. milliamperes may be read.

The D.C. meter scale is directly calibrated in ohms, so that it may be used as an ohmmeter. It has two ranges, 0-10,000 and 0-100,000 ohms. A small 4.5-volt "C" battery, housed in the analyzer, provides the necessary voltage. Adjustments necessary, because of varying battery voltage, are accomplished by means of an adjustable resistor.

Capacity measurements may also be made directly, since the A.C. meter is calibrated in microfarads. There are two ranges possible, 0-1- and 0-10-mf. The readings, however, are only accurate when the instrument is connected to a 115-volt 60-cycle line.

A 4000-ohm constant impedance output meter is available in this analyzer. A dry rectifier used in a bridge circuit (see diagram of connections) allows the D.C. meter to be used on A.C., with a sensitivity of 1000 ohms per volt. Three ranges of voltage are available, 5-25 or 125 volts maximum. The 4000-ohm impedance is maintained constant on all ranges, a very desirable feature.

The appended diagram gives the detailed connections of the analyzer, together with the values of all the resistors used; this may be referred to for any details desired.

Hickok "Model SG-4700"

The Hickok "Model SG-4700" set tester is an example of an analyzer which uses a separate meter for each of the circuits entering a radio tube. This feature greatly simplifies the internal circuit; eliminates complicated switching arrangements; prevents the possibility of burning out the meters by operating them on an incorrect scale; and greatly speeds up the actual testing operations, since all the values to be found are indicated simultaneously. Furthermore, all multipliers and shunts are self-contained; obviating the necessity of auxiliary apparatus.

The D.C. voltmeters have a resistance of 1333 ohms per volt, using only 0.75-milliampere for full-scale deflection. The plate voltmeter has two scales; 0-300 and 0-600 volts; giving a meter resistance on the 300-volt scale of 400,000 ohms and on the 600-volt scale of 800,000 ohms.

The D.C. filament voltmeter has one range of 0-30 volts, and an internal resistance of 40,000 ohms. When testing a screen-grid tube, this same meter also reads the control-grid voltage.

The grid voltmeter is of the same type as the others, having two ranges with the zero mark in the center of the scale; these two are 30-0-30 and 150-0-150, with internal resistances of 80,000 and 400,000 ohms respectively.

The A.C. voltmeter in this analyzer, designed for the special requirements of radio testing, is of the dynamic type, having a practically uniform scale. The low-range scale of 8 volts contains 80 graduations, by which all values from 1 to 8 volts may be read in 1/10-volt values. The next range, of 160 volts, gives accurate indications of line voltages. The high range, of 800 volts, enables the user to measure the voltages of the power transformer secondaries which supply the plates of rectifier tubes. Both the 160- and the 800-volt ranges are of high resistance; thus assuring accurate readings under all conditions.

The A.C. voltmeter is also calibrated to read directly in microfarads; enabling the measurement of capacities from 0.25 to 15 mf. directly. The regular 110-volt A.C. line is used as the source of power; connections to the tester being made by a set of leads, which are supplied as standard equipment. The value of all fixed condensers in a receiver under test can be found by making connections with insulated prods (which are also supplied as standard equipment) without removing the condensers from the receiver.

The plate milliammeter is equipped

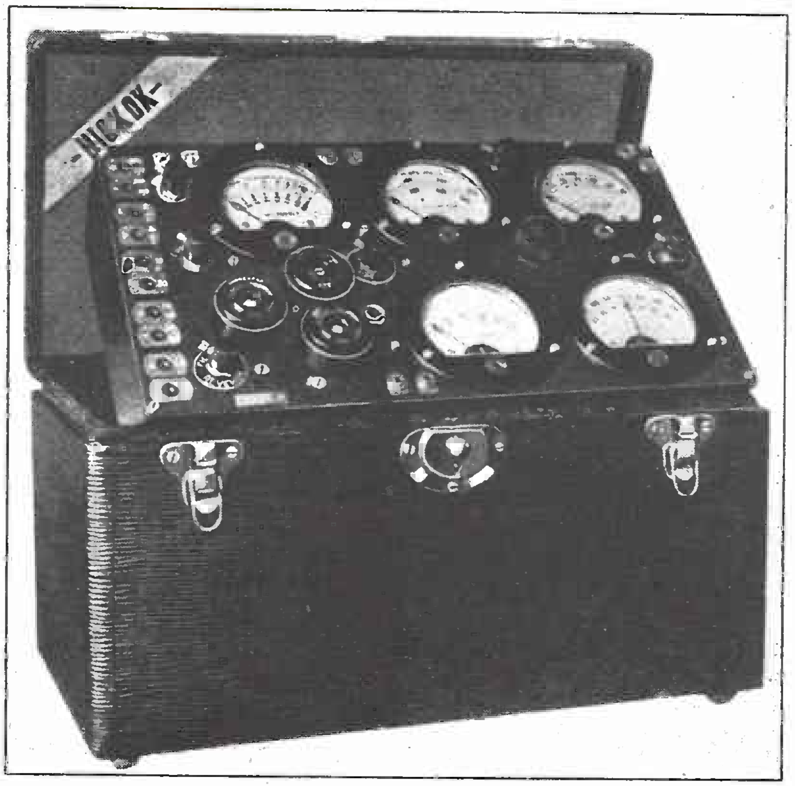

with scales of 20 and 200 milliamperes; which afford sufficient range to measure accurately the milliamperes consumed by individual tubes, as well as the entire plate current consumed by any receiver.

The plate milliammeter is alsc equipped with a direct-reading ohmmeter scale; operating as an ohmmeter from a self-contained battery of 4.5 volts. In conjunction with an adjustable rheostat, resistance values from 20 to 20,000 ohms may be read directly from the milliammeter scale.

The "SG-4700" Analyzer contains a 4.5-volt "C" battery, which is introduced into the grid circuit of the tube under test by pressing a button. This definite change in the grid bias results in a definite change in the plate current, by which the mutual conductance is easily found

Pin jacks are provided, for each individual meter, to permit use of all meters as separate instruments. The insulated prods are equipped with a special plug, which is inserted in the pin jacks; making the operation of connecting to the meter desired, a matter of a few seconds. The "No. 4A" binding-post adapter (supplied as standard equipment) instantly changes the pin jacks to binding posts; thus giving the user his choice of either pin jacks or binding posts for connection to each meter.

The set-to-analyzer cable is not connected permanently to the tester. This connection is made by means of a special plug, which is inserted in the socket marked "Connector"; thus eliminating the cable from the tester when the meters are used individually. The 5-to-4 (UY to UX) prong adapter for insertion in the receiver is provided with a locking device.

The circuit diagram of the analyzer is appended; its obvious simplicity is due to the use of separate meters in each tube circuit. The circles with numbers in them represent the pin jacks, connections to which allow the use of external meters.

A filament-cathode switch is provided, to connect the heater to the cathode when desired.

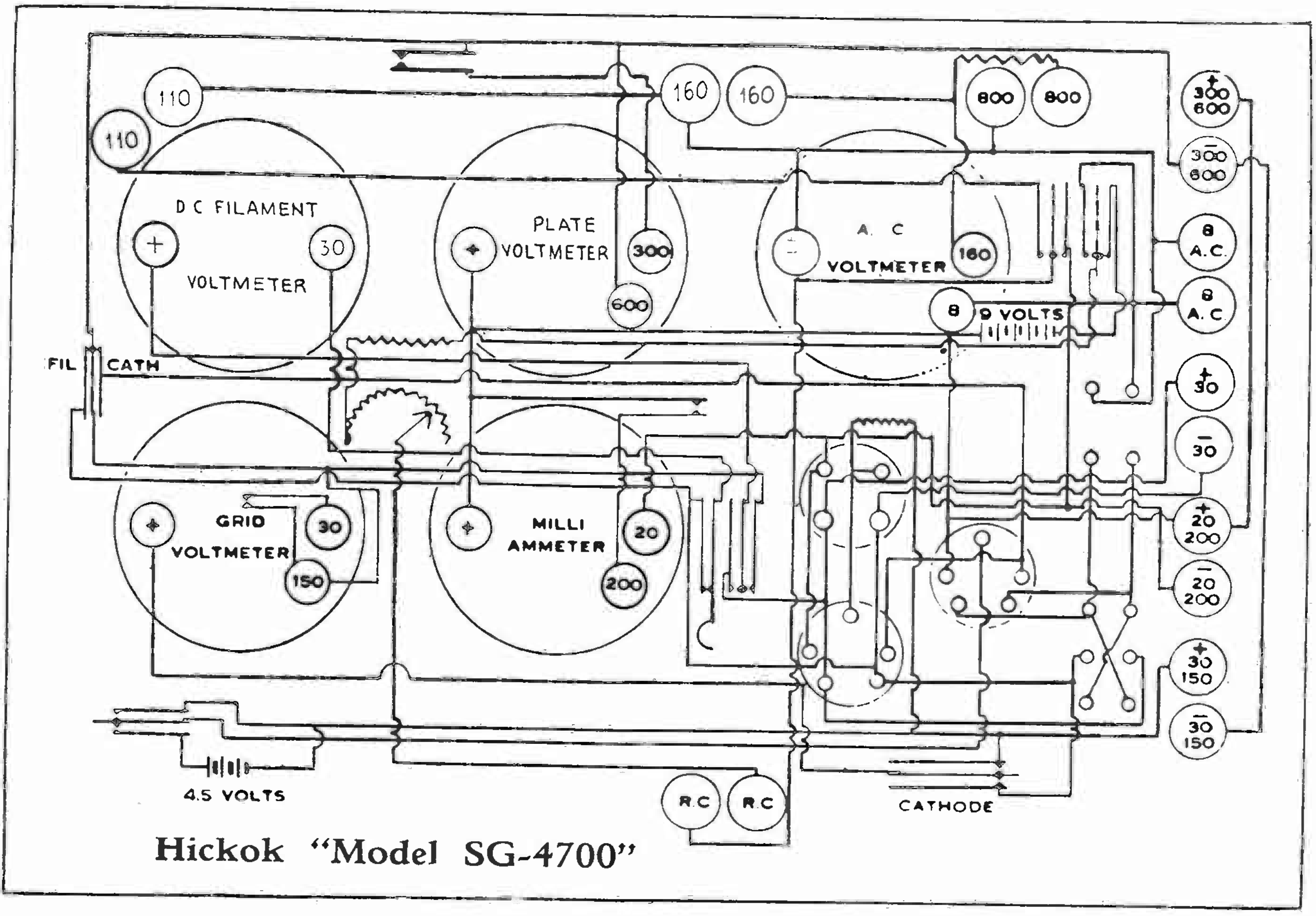

Hickok "Model SG-4700"

Jewell "No. 444"

The Jewell "Pattern No. 444" Radio Set Analyzer has been designed for the analysis of the conditions in any radio set, whether operated from batteries or from an alternating-current line. It will take care of D.C. plate voltages up to 600 volts of all tubes used in commercial sets today, and of all standard types of D.C. or A.C. filament excitation.

The analyzer is provided with two instruments. That at the left is a combination A.C. voltmeter, ammeter and milliammeter equipped with scales to read 0-4-8-160-180 volts; 0-4-8 amperes; and 0-20-100 milliamperes. (The above numbers refer to full-scale readings; that is, there are eight scales on this instrument.) The right-hand instrument is a combination D.C. voltmeter, milliammeter, ohmmeter and Output Meter. This instrument is equipped with three scales—0-6-12-30—on the lower arc, and an ohmmeter scale graduated to read directly the low range of 0-1000 ohms, on the upper arc. Additional ohmmeter ranges are also available, from 0-10,000 and from 0-100,000 ohms.

The Output Indicator consists of a copper-oxide rectifier in conjunction with this D.C. meter. Three ranges of output volts are possible; 0-1, 0-10 and 0-50 volts. This output meter is fairly accurate over the entire audio-frequency band; except that the 0-50 range will approach 45 volts at the higher frequencies, because of decreasing reactance of the blocking condenser placed in series with this range. (See diagram of connections.)

Seven ranges of D.C. voltages are available, namely; 6, 12, 30, 60, 120, 300 and 600 volts. Current readings of 12, 60 and 120 milliamperes may also be measured. Note that all of these ranges are even multiples of the scales marked on the instrument.

To facilitate the use of the analyzer, the various terminals of the UX and UY sockets have been designated by the letters K, G, P, H¹ and H; referring respectively to cathode, grid, plate and the two heater leads. The selector switch is engraved, showing the proper combinations of these letters. For taking voltmeter readings, the letters shown indicate the two terminals between which the voltmeter is connected.

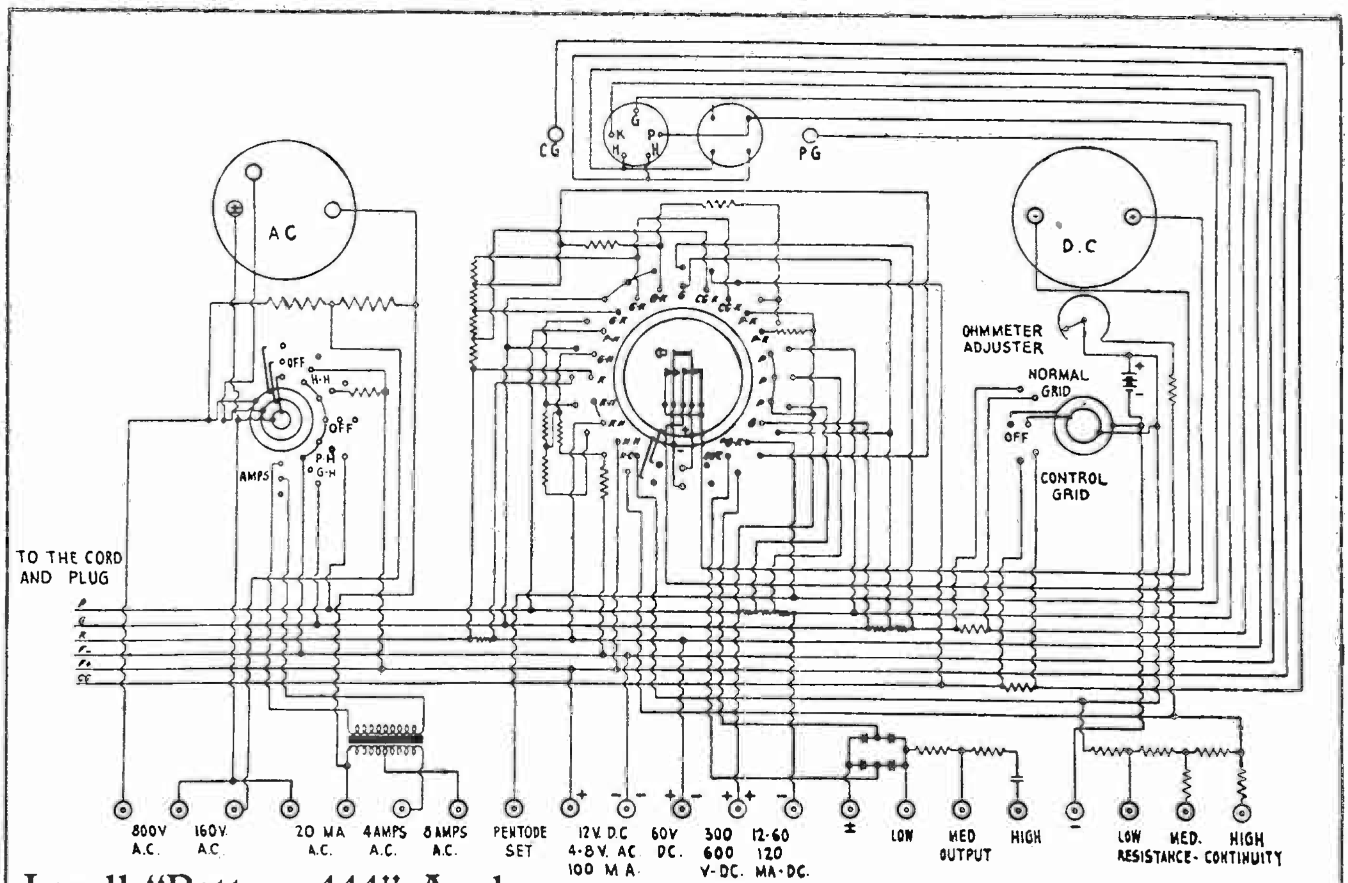

Jewell "Pattern 444" Analyzer

In the case of a current reading, a single letter is used; indicating the circuit in which the instrument is connected as a ammeter or milliammeter. To carry out this scheme, the control-grid terminal at the top of the tube is labeled CG, and the pentode-grid terminal (on the side of the base of an R.F. pentode) by the letters PG. When using these designations, it must be born in mind that these letters are symbols referring only to certain socket terminals, and not to the elements within the tube itself.

As in other analyzers, tube checking is performed by the use of a small "C" battery which is inserted in the grid circuit, by the manipulation of a switch, changing the plate current by a definite amount. The change in plate current is indicative of the condition of the tube.

The panel of the analyzer is supplied with UY and UX adapters, to accommodate all types of tubes now used in commercial radio receivers. The plug is a UY plug and, in order to insert it in a UX socket, a UY-to-UX adapter is used. The total current drain from an '81 rectifier tube may be measured by inserting the analyzer plug in the rectifier socket and turning the dial to "P-120 MA." If an '80 is being tested, the total current is the sum of the readings taken when the selector switch is in positions "P-120 MA" and "G-120 MA".

Two ranges of capacity measurements are available in this instrument. The low range covers, very well, values from .05 to 1.0 microfarad; and the high range from .25 to 10 mf. This calibration is valid only when the line-voltage is approximately 110 volts at 60 cycles. If the voltage is higher or lower than the stated value, then the capacity indicated will be higher or lower by a corresponding amount. If the frequency is 50 cycles, instead of 60 cycles, then the reading will be only 5/6 of the actual value. The readings of the A.C. milliammeter are referred to a chart from which the capacity is obtained. These charts and the necessary instructions are supplied with the instrument.

This analyzer is equipped with two sets of test leads, each lead of which has pin tips on one end to fit the tip jacks on the analyzer panel. These pin tips are moulded into a special elbow handle, to facilitate the use of the tip jacks and to prevent unnecessary wear on the leads. One pair of test leads is supplied with long insulated test prods, for making measurements throughout the chassis of a radio set. The other pair is supplied with spade terminals, which can be used when more permanent connections are required.

A glance at the appended diagram will reveal the almost universal use of rotary switches, of both the two- and three-arm types. A very novel feature in the analyzer is the use of a tapped current transformer, instead of shunts on the A.C. meter, to facilitate changing the current scales on this instrument.

Readrite "Model 600"

The Readrite "Model 600" and "Model 700" Radio Set Analyzers are identical electrically; the only difference between them being in the type of carrying case. The "No. 600" is housed in a large leatherette case, with sufficient room for tubes, tools and supplies. The test equipment and panel is located in a removable tray in the top of the case.

This instrument uses three meters: a D.C. voltmeter; a D.C. milliammeter; and an A.C. voltmeter. A selector switch is provided for checking all parts of the tube circuits, by connecting one of the three meters in the proper circuit.

Three ranges of D.C. voltages are available for plate or grid readings; 0-60, 0-300 and 0-600 volts.

Three ranges of A.C. voltages are available; 0-10, 0-140 and 0-700 volts.

Two ranges of direct-current readings are available; 0-20 and 0-100 milliamperes.

Measurement of tube constants is performed by setting the selector switch to the proper position; and then flipping one of the toggle switches to obtain a better reading, if so desired.

A small 4.5-volt "C" battery is housed in the carrying case for grid-test and resistance measurement work. For grid tests (which really means tube tests) the grid-test push-button is pressed; this places the small "C" battery in series with the grid, making the

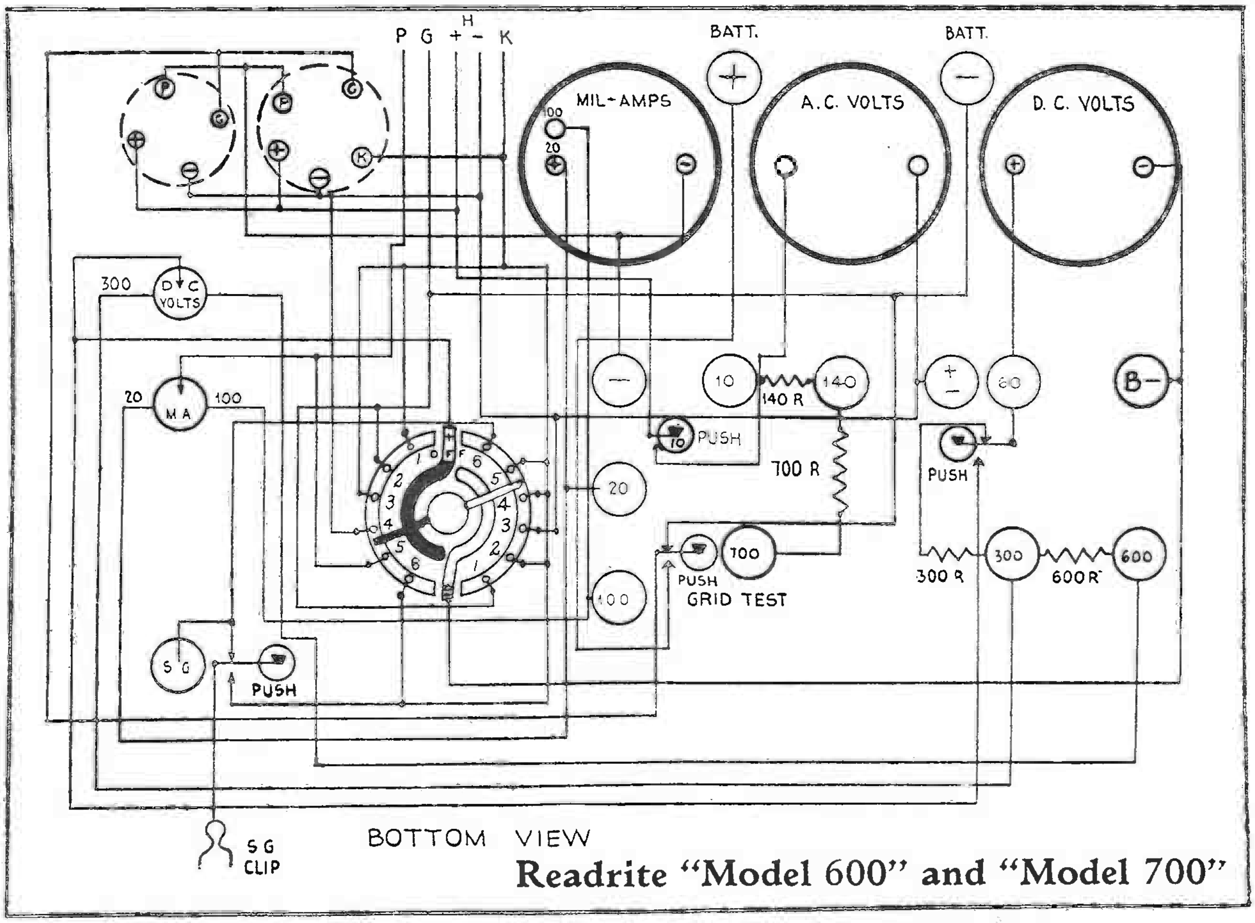

Readrite "Model 600" and "Model 700"

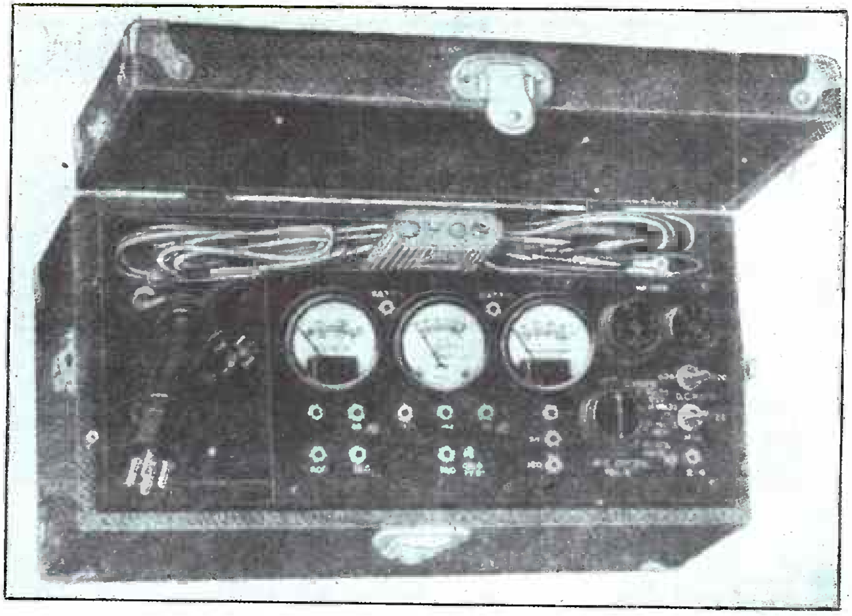

grid more positive and increasing the plate current. The increase in plate current is indicative of the condition of the tube.

For testing screen-grid tubes, another button is pressed; this connects the control-grid directly to the cathode, changing the control-grid voltage which, in turn, changes the plate current. As before, the change in plate current is indicative of the condition of the tube.

Charts are furnished, showing how resistors up to 100,000 ohms may be measured. Capacities of the sizes ordinarily found in radio receivers are also measurable with this instrument.

Pin jacks, clearly marked, are mounted on the panel for the use of the meters externally; a two-arm, 180-degree rotary switch is used for the selection of the proper circuit. Both five- and four-prong sockets are mounted on the panel, to obviate the necessity of having too many adapters.

The high-range A.C. voltmeter permits the measurement, not only of the line-voltage, but of power-transformer and rectifier-plate voltages.

Unlike many other analyzers, this model does not house the "C" battery used for testing in the analyzer compartment. This probably makes for ease in replacement and also results in a saving of room.

The D.C. voltmeter is of the low-resistance type, having a resistivity of 200 ohms per volt. While such a low-resistance meter will not give accurate readings of voltages, nevertheless the results are sufficiently indicative of the correct values for all practical work.

Care should be taken to remove the cable from the radio set when any of the meters are being used externally, when condensers or resistors are being measured, or when a continuity test is being made.

Sterling "R-517" Mutual Conductance Meter

The Sterling "R-517" Mutual Conductance Meter is designed solely for the purpose of testing tubes; this means two things, an emission test and a mutual conductance test, as explained before. As we have said, if the mutual conductance is normal, when normal plate, filament and grid voltages are applied, then (for all practical purposes) the tube is good.

The direct measurement of mutual conductance is valuable, in testing tubes with which the Service Man is not familiar. This is especially so at the present time, when many new tubes are being placed upon the market.

The "R-517" is designed to measure mutual conductance. It does this, not by applying a voltage in series with the grid and computing the mutual conductance, but by means of a bridge circuit built into the tester.

An examination of the appended circuit diagram and illustration reveals four sockets: one to be used only for testing rectifier tubes; one for **preheating** heater-cathode tubes about to be tested; and the third and fourth for four- and five-prong tubes under test.

Filament voltage is adjusted by means of a rotary switch (at the right of the instrument) which is connected to a tapped transformer; each tap corresponds to a different filament voltage (see diagram of connections).

Plate voltage is adjusted by means of a toggle switch at the upper left of the instrument. For tubes requiring less than 250 volts on the plate, the switch is thrown to the left; for tubes requiring more than 250 volts, it is thrown to the right. As will be seen by the diagram, this switch merely changes the turns-ratio of the transformer used for supplying plate voltage.

To measure mutual conductance, all that need be done is to set the toggle switch to the proper side for plate voltage, and set the filament and "C" bias switches correctly. The milliammeter will then read.

Now, on pushing the button marked "G_m" (the one nearest the mutual-conductance dial) the milliammeter reading will change. Adjust the "G" knob until the milliammeter reading does not change whether the button is up or down. The dial then indicates the Mutual Conductance directly.

Two ranges are available; one up to 1500 micromhos, and the second to 3000 micromhos. The values then can be directly compared with the manufacturer's chart.

When measuring the '47, '33 or PZ pentodes, it is necessary to use the special pentode adapter which is furnished with the instrument. This adapter is not necessary when measuring the '38 pentodes.

Leakage between the cathode and the heater of heater-type tubes (such as the '24) may also be measured. The test for leakage is made by pressing the second button from the right. This should cause the milliammeter pointer

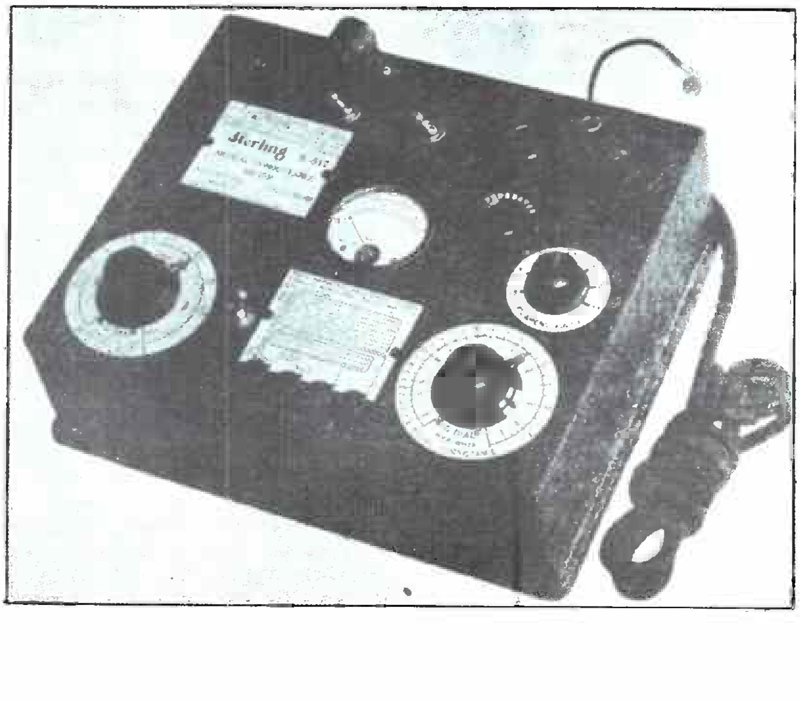

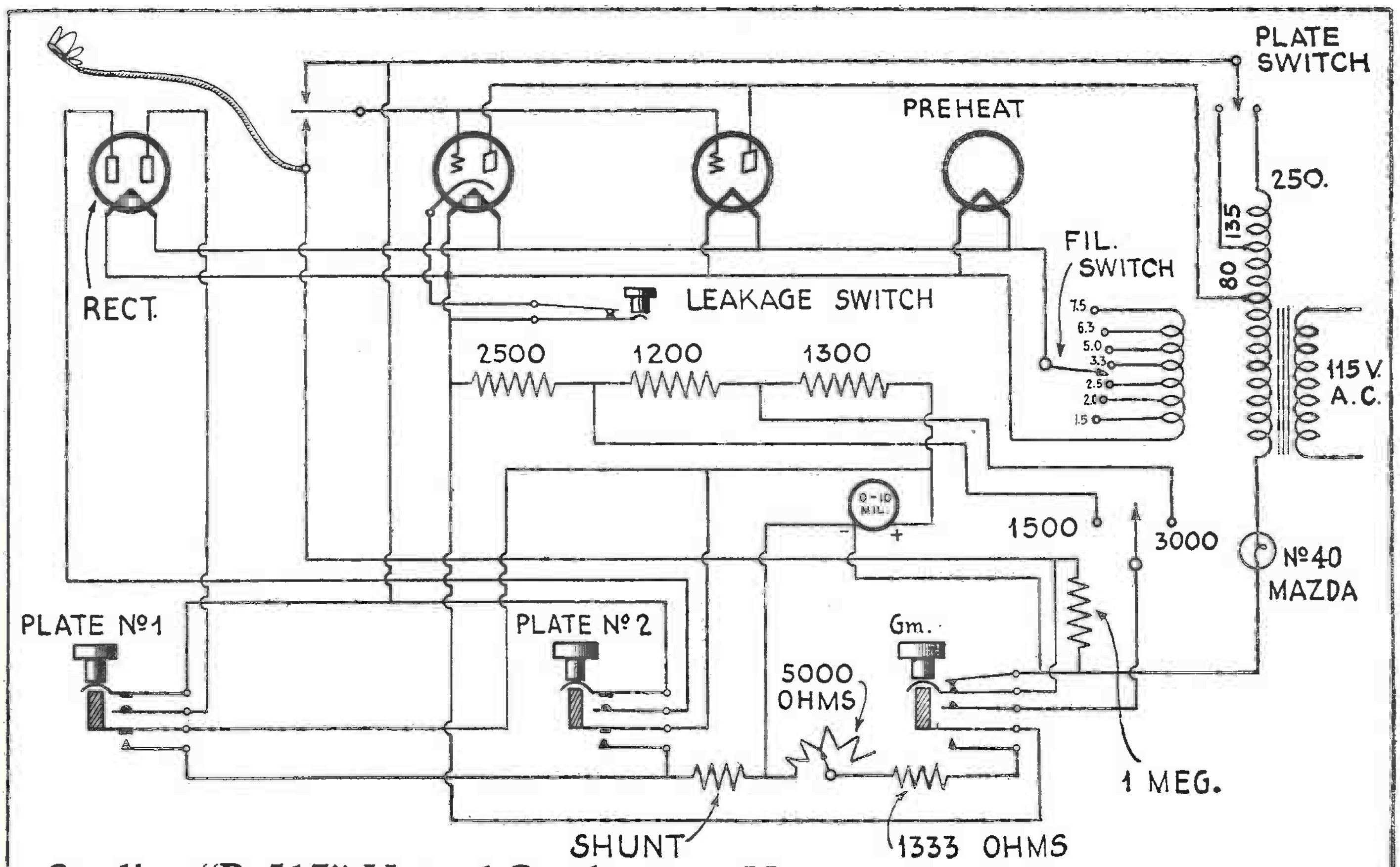

Sterling "R-517" Mutual Conductance Meter

to return to zero. If the pointer does not return all the way to zero, leakage exists.

Rectifier tubes are to be tested **only in the socket** at the upper left of the instrument. No reading will occur until the buttons "No. 1" and "No. 2" are pressed; these control the two plates of the '80 tube separately. These buttons apply a fixed voltage to the plates of the tube and, at the same time, connect a shunt across the milliammeter.

The "C" dial should be turned to the extreme left, to give zero bias, when testing rectifier tubes.

The fuse in this instrument is a "Type 40" Mazda pilot lamp, rated at 6 volts, 0.15-amp. In testing amplifier tubes this bulb will not glow; but when testing rectifier tubes (because of the heavy current drawn) a glow will be seen. If both buttons controlling the plates of the '80 tube are pressed at the same time, the bulb will light brightly; however, this current will be within the capacity of the bulb and will do no harm.

In case of a short-circuit between elements, within the tube being tested, the bulb will blow very quickly; thus protecting the milliammeter and resistor with the tester. This type of tube can be obtained, for replacement, almost anywhere.

The milliammeter in the "R-517" tester has a range of 0-10 mills. However, because the meter integrates the average current over a complete cycle, and sine-wave current flows only during a half cycle, the actual peak current is 3.14 times the meter reading. For example, when testing a '45 tube, the milliammeter may read 8 mils. Then, 8 x 3.14 = 25.1 mils; which is the actual peak current flowing.

When measuring tubes, variations of 25% above or 20% below the rated values of mutual conductance may be expected; because tube manufacturers generally do not hold their product to closer limits.

This instrument is small, compact and of relatively light weight. The appended diagram of connections may be consulted for a more detailed analysis of the circuit used.

Weston "Model 566" Set Analyzer

The Weston "Model 566" Radio Set Analyzer is an example of an instrument which relies almost entirely upon a single selector-switch for its operation. This, it has been conceded by many, is a decided advantage over the push-button types. A glance at the appended illustration reveals the simplicity of operation obtained by this type of switching.

Directly under the A.C. meter (seen at the extreme left) is a 3-point dial to change the multiplier scale for low voltage A.C. filament readings. These three scales are convenient, especially in view of the low-voltage tubes now available. Directly to the right, and a little below this rotary switch, is a "Grid-Test" push-button; pressing this changes the bias by 4.5 volts. The resultant plate-current change is an indication of the condition of the tube. Directly to the right of this button is a "S.G. Tube-Grid Test" push-button; pressing the latter connects the control grid to the cathode; which also changes the plate current, indicating the condition of screen-grid tubes.

Directly above this button is a toggle switch marked "VM Return: K-F"; this is provided for the purpose of changing the voltmeter return from **cathode** to **filament.** It is set in the "K" (cathode) position for all tubes except pentodes; in which case it is flipped to the "F" position. At the right of this toggle switch is a reversing switch for the D.C. meter, which is sometimes very handy.

The scale of the D.C. meter is also calibrated in ohms for use as an ohmmeter. This analyzer offers two ranges, one from 0-10,000 ohms, and another from 0-100,000 ohms. A study of the diagram of connections shows that the 4.5-volt grid-test battery is used in this circuit. Provision is also made to adjust the reading of the ohmmeter, to compensate for battery voltage changes.

The D.C. meter may also be used as an output meter. By referring to the diagram of connections, it can be seen that a dry-rectifier bridge circuit is used to rectify the A.C. to be measured. Two scales are provided; one 0-5 volts, and the second 0-100 volts.

Of course, either the A.C or the D.C. meter may be used externally; each with its selection of voltage and current ranges.

As may be seen from both the diagram and the picture, the D.C. meter may be used independently with the following scales:

Voltage, four ranges—10-100-250-1000 Volts;

Current, three ranges—2.5-25-100 Milliamperes.

Provision is also made so that, by additional shunts which may be purchased, current measurements up to 10 amperes may be obtained.

The A.C. meter may also be used externally. Here again a variety of ranges is offered, as follows:

Voltage, five ranges—4-8-16-200-1000 Volts;

Current, four ranges —20 ma.—100 ma.—4 Amps.—8 Amps.

The A.C. milliampere scales should be particularly valuable for work on the measurement of distortion.

For capacity measurements, a number of ranges are available. The D.C. meter is used in conjunction with the dry rectifier.

For capacities from .001- to .05-microfarad, the large selector switch is turned to "Output Meter B.P." (see diagram). One lead of a line-voltage test cord is connected to the "±" binding post of the Output Meter's terminals. A connection is made to the 100-volt terminal of the Output Meter. The condenser to be measured is connected between the other end of the A.C. line and the 100-volt post. Readings are then taken on the 100 scale of the D.C. Volt-Milliammeter. A chart which is

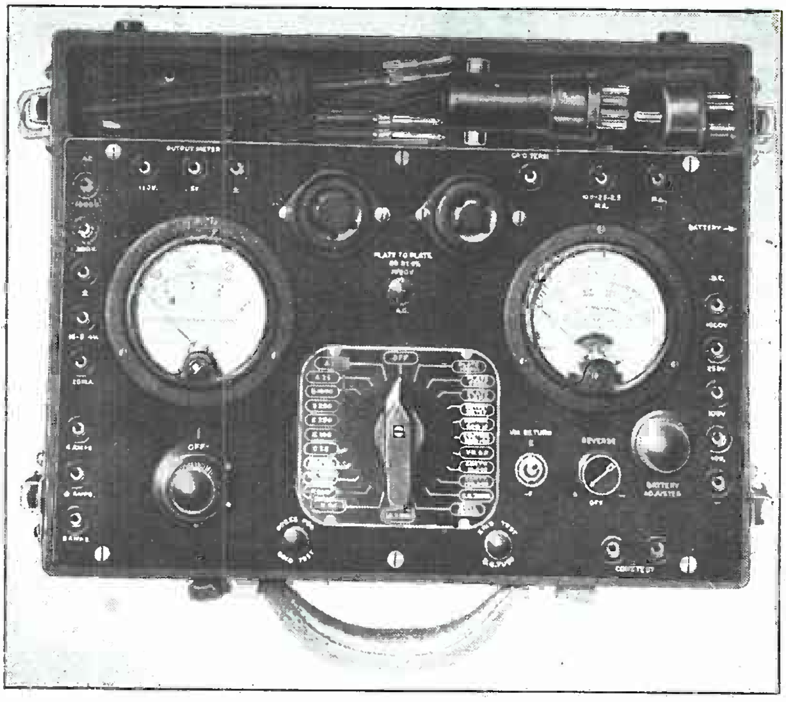

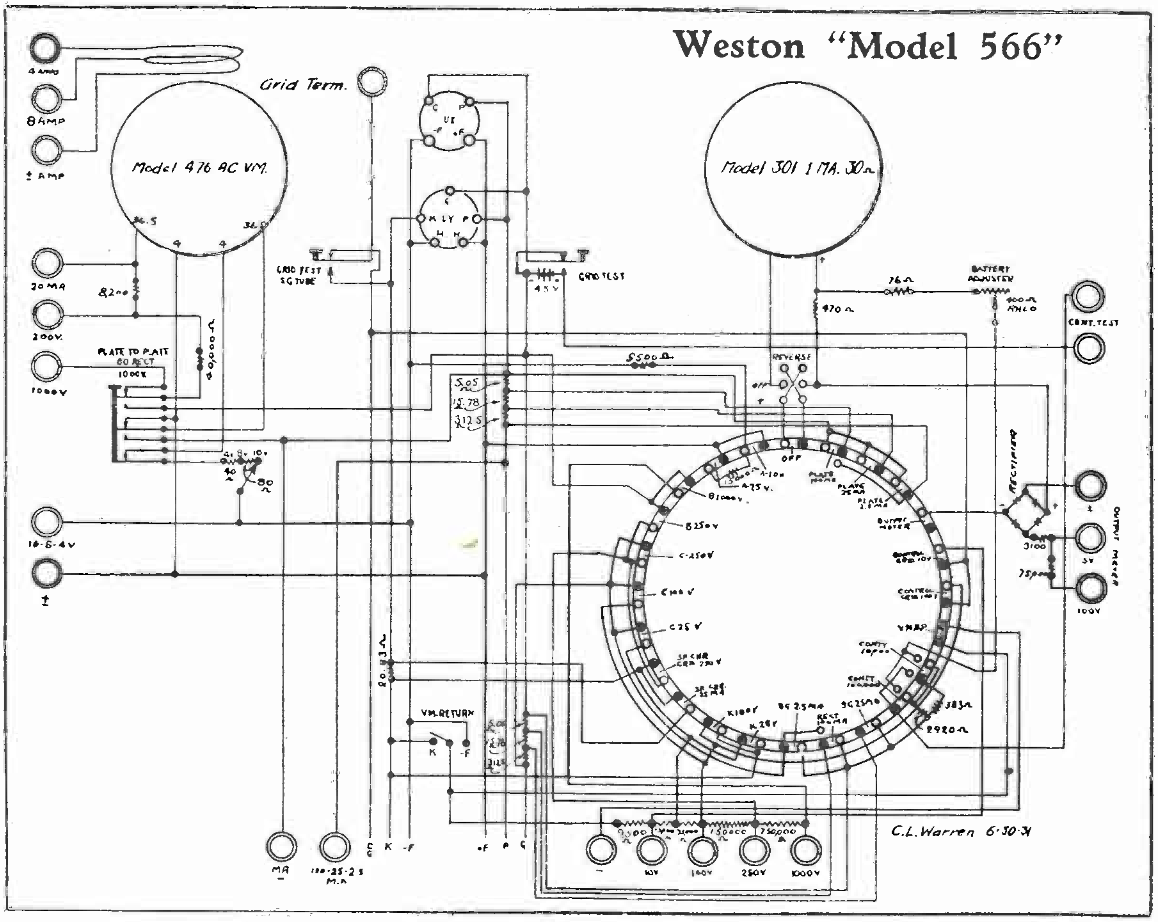
Weston "Model 566"

provided gives the capacity for any scale reading.

For capacities from .05- to 0.5-mf., one lead from the A.C. line cord is connected to the 200-volt binding post at the left of the A.C. meter, and another connection is made to the binding post directly under this. This condenser to be measured is then connected between this lead and the remaining lead of the A.C. line. In this scale the A.C. meter is calibrated for capacity.

For capacities between 0.5 and 2 mf., the procedure is the same as above; except that the 16-8-4-volt scale is used instead of the 200-volt scale.

All of the above calibrations apply when the line voltage is 115 volts at 60 cycles.

For filter condensers up to 6 microfarads, external resistors are used. A diagram of connections and a calibration curve is supplied for the purpose.

Another handy feature is an inductance calibration chart. The inductance to be measured is connected in series with the A.C. line, (115 volts 60 cycles), and the 200-volt range on the A.C. meter. The chart giving the inductance for various scale readings.

This analyzer can be used for cathode-heater voltage and leakage tests, space-charge currents; voltages and currents in rectifier circuits. All types of screen-grid and pentode tubes may also be analyzed.

Beede "Preston" Model

The Preston set analyzer has been designed to perform routine tests on radio sets of both the D.C. and A.C. types. Three instruments are used: an A.C. voltmeter; a D.C. voltmeter; and a D.C. milliammeter. No rotary switches are used, all meters being inserted in the circuit by means of need be depressed to obtain the desired reading.

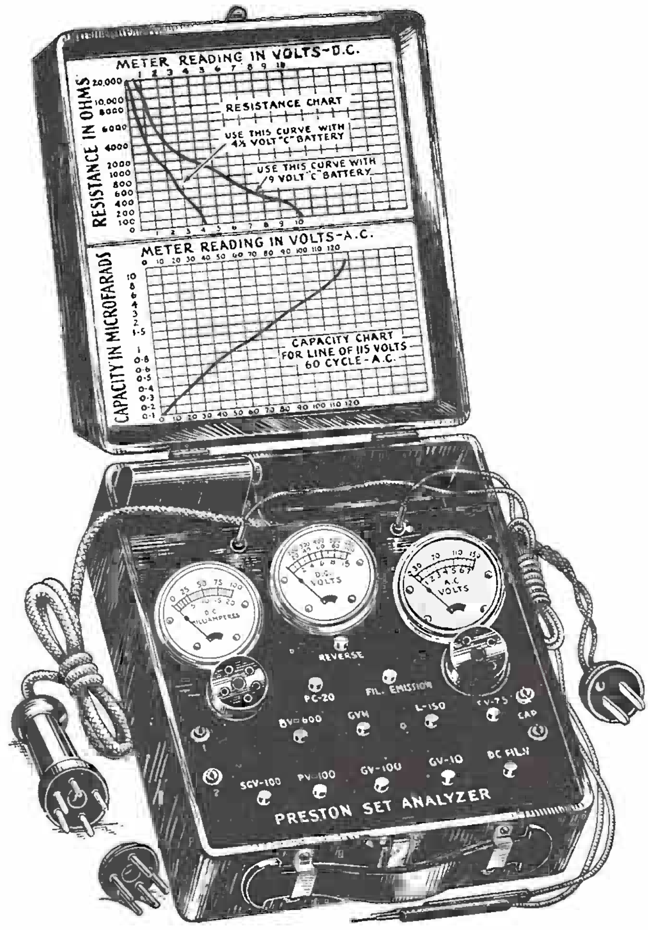

The plate-current meter is so connected that readings are normally obtained on the 100-ma. scale. By pressing the "P.C. 20" button, the 20-ma. scale is used. This arrangement is used in order to prevent burning out of the meter, due to the possible use of the wrong scale of the instrument.

The plate voltage may also be measured by depressing the proper button. The "P.V. 600" should be pressed first. If the reading is under 100 volts, then the "P.V. 100" button should be pressed. This precaution also is to prevent burning out of the voltmeter, due to the use of too much voltage for the scale being used.

There are three grid-voltage buttons: "G.V. 100" for power tubes; "G.V. 10" for general-purpose tubes (such as '01A, '26, etc); and "G.V.H." for heater-type tubes. The selection of the proper button to be used depends upon the grid bias of the tube that is to be measured. Detector tubes using a grid leak and condenser will give no grid-voltage reading.

There are two buttons for filament-voltage measurements: one for A.C. — "F.V. 7.5"; and one for D.C. tubes —"D.C. FIL. V." With D.C. tubes, the meter may give a reversed reading, due to reversed "A" connections to the socket of the tube. Some manufacturers connect leads one way, and some another. If the meter reads reversed, it can be made to read correctly by pressing the "Reverse" button.

To facilitate measuring line-voltages, the two-prong plug is inserted in the 110 volt A.C. receptacle. The button marked "L-150" is pressed, and the reading will be obtained on the 150 scale of the A.C. meter.

To test tubes, a small 4.5-volt battery is housed in the Analyzer. By depressing the button marked "Filament Emission" the positive terminal of this battery is connected to the grid. This should cause the plate current to increase; the amount of increase indicates the condition of the tube.

To make a grid test on '24 type tubes, there are provided two leads; a long and a short one. The prod of the long lead is inserted in pin jack No. 2, and the cap at the other end of this lead is inserted into the cap of the lead, in the radio set, which normally goes to the top of the tube. The cap at the end of the short lead goes to the top of the tube in the analyzer; while the other end of this lead goes to pin jack No. 1. The removal of this last lead from pin jack No. 1 should cause the plate current to decrease to nearly zero; the change in plate current is indicative of the condition of the tube.

Continuity and resistance measurements are also possible with this little Analyzer. The test prods supplied are inserted into the pin jacks marked "C". A jumper is placed in the five-prong socket, connecting one of the heater terminals to the grid. The test prods are then placed across the part of the circuit to be tested. By referring the meter readings to a chart, the values of resistance may be determined. The resistance tests are made with the 4.5-volt battery in the analyzer; however, by connecting another 4.5 volts in series (giving a total of 9 volts), much higher resistance values may be measured.

To test and measure capacities, the test prods are inserted into the pin jacks marked "CAP", and the two-prong plug is inserted in the 110-volt A.C. line. By connecting the prods to the condenser to be measured, a reading will be obtained on the 150-volt scale of the A.C. instrument. A capacity chart is supplied with the instrument; so that, by referring the readings on the A.C. instrument to this chart, the capacity of the condenser under test is determined.

When measuring either condensers or resistors, the 5-prong plug should **not** be connected to the radio set.

A glance at the diagram will show the extreme simplicity of this Analyzer. The fact that the milliammeter is always in the circuit enables the plate current to be measured while other tests are being performed.

An adapter is used to test four-prong tubes, since the cable plug applied to the radio set has five prongs. The adapter is snapped over this five-prong plug, thus permitting the measurement of both heater and filament types of tubes.

Schematic Circuit of the

Beede "Preston" 1931 Model

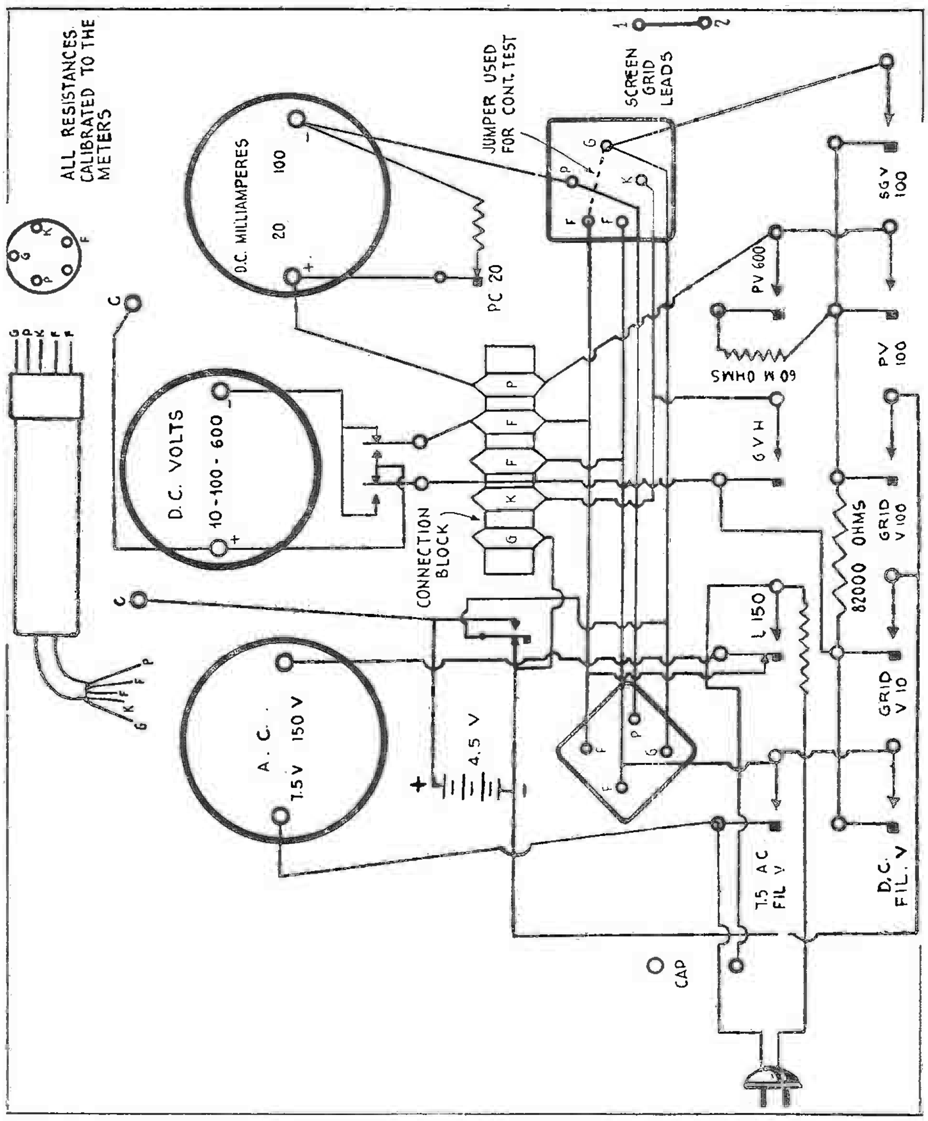

A Vacuum Tube Voltmeter for Servicing

Of all the vacuum-tube voltmeters the writer has seen, none were portable. Most of them were of the laboratory type, requiring high "B" and "C" voltages and consequently blocks of batteries; and most of them were fragile and delicate, and not in the least suitable for work in the field.

With this in mind, a series of experiments was started; to make, if possible, a compact, portable, reasonably accurate and substantial meter. Neither "A," "B" nor large "C" batteries were allowable. The final result is expressed in the diagram (Fig. 3).

The parts required are low in cost; except for the meter, they may be found in almost every Service Man's junk box. In addition to the 0-1-scale milliammeter, there is a '12A vacuum tube and a sub-panel socket; a 25-watt lamp and socket; two fixed condensers of 2- and 1-mf. capacity; a 400-ohm potentiometer, shown as the center-tapped resistor; a grid leak with its mounting; and, if desired, multiplier resistors to be used with a switch, as shown by the dotted lines. The battery is of the 3-volt flashlight type; there are no others to buy.

The condensers serve to keep the frequency error of the voltmeter very small; that is, if the meter is calibrated to zero at 60 cycles, and the frequency is then increased while the other factors are kept constant, the readings may be made with the same accuracy as at the lower frequency. Since very low potentials are encountered, the condensers need not be of high rating.

The potentiometer R is set at its center point, which is the zero potential of the filament circuit. The lamp, as will be seen, serves merely to cut down the supply of house current to the amount drawn by the tube; and it serves also as a ballast to keep the current flow smooth. A '12A type was selected for the tube, because of its efficiency at low filament voltages; it has a practically linear curve at this temperature, and, with its high thermal lag, it is best for this purpose. Select a good tube for the meter.

The meter should be of a good make; the main considerations are a long scale, easily read, and reliability. The instrument used by the writer is calibrated in microamperes—fifty divisions of 20 each. This makes it easier to read and tends to encourage greater accuracy. It is not advisable to make a new scale at home; if you must have one, let an experienced draftsman make it. It is not indispensable, but convenient.

The meter is calibrated by putting known A.C. voltages on the grid. During and after calibration, no part may be changed; this applies to the grid leak (2 or 3 megohms) across the input.

With this instrument, radio sets may be neutralized, and tuned circuits synchronized in the manner explained in all service manuals and data sheets; sensitivity at different frequencies may be measured, etc.

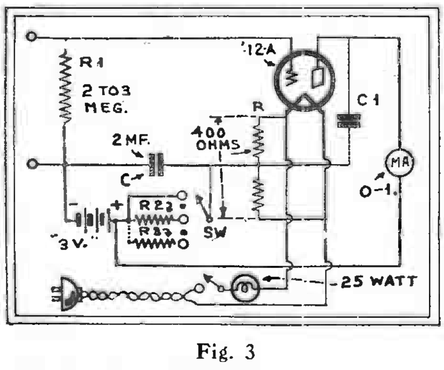

Fig. 3

The simplicity of this really portable unit may be seen: it is a useful companion of the set analyzer. The shunts R2, R3, etc., must be calibrated for the milliammeter used.

SALVAGING FILTER CONDENSERS

Some Service Men who write in these columns recommend a hammer and cold chisel to salvage parts within sealed cans, and ruin lots of good condensers. I don't even turn in the faulty blocks on new ones; as it is a simple matter to repair them at home, besides saving time.

I use a gallon paint can about half full of seal (taken from packs that I wrecked before I used this system). Put this bucket on a hot plate and don't use much heat. When the seal is hot, lower with pliers the pack that you are going to thaw out, into the hot seal. Leave it in there about half an hour or more. When the block is thoroughly thawed out, lift out with a pair of pliers, and pour out the hot seal. In some cases it runs out through the numerous cracks. When emptying the can, be careful not to dump out the parts. You will find that there is practically no seal left on the chokes, condensers, etc.; but do not handle condensers while warm, because of the likelihood of pulling the leads out.

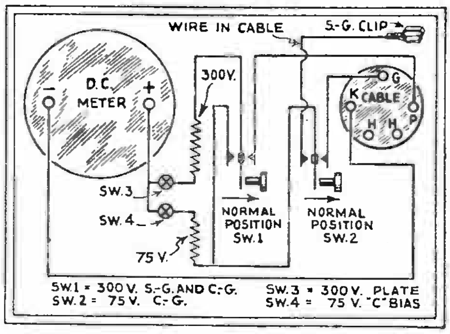

Fig. 7

Schematic diagram showing the connections of SW.1 and SW.2.

MODERNIZING the JEWELL 199 ANALYZER

Complete construction details of the revised analyzer which will test screen-grid and pentode tubes.

MANY Service Men have on hand, or are still using, one of the original Jewell 199 set analyzers. These analyzers are now obsolete and are of little use for testing sets using '24 and pentode tubes. As new set analyzers are expensive, I decided to rebuild my old one. With the addition of a few parts and an afternoon's work it was brought up-to-date with extra equipment for testing screen grid and pentode tubes.

The parts necessary to make the change can probably be found in your junk box. The springs from an old jack, two UY tube bases, some hookup wire, two S. P. D. T. switches and two Pilot No. 215 subpanel sockets are needed. The switches may be of the midget-jack, Yaxley push-button or toggle type. If none of these are handy, you can make your own, as I did. A few jack springs and two inches of ¼-in. or ⅜-in. bakelite rod is all that is needed.

All of these Jewell testers have two 7.5 volt filament switches, one marked "standard" and the other "reverse." For present-day testing, both are unnecessary although one of them, with a few alterations, can be used as the reversing switch for the D.C. meter.

A word of caution—Be very careful when making these changes. Rough handling, a wrong connection, a poorly soldered lead that may later come loose, may cause serious trouble and possibly burn out some part of the tester. Have a clean bench to work on and a few small trays to put small parts in so they will not be mislaid.

Making the Changes

Disconnect the 4.5-volt test battery, remove the adapters, and take out the screws holding the panel. Lift the tester from its case and place it face down on the bench so that the socket and cable-terminal block are towards you. The D.C. switch-block is on the right-hand side. The switch to be altered is the second one from the bottom edge (the edge towards you).

Unsolder the two wires connected to the D.C. meter, tape and push them out of the way. Unsolder the wires connected to terminal Nos. 3 and 4 on the D.C. switch-block and bend them to one side so they cannot make contact with anything. Connect a lead from switch-block terminal No. 3 to the positive post of the D.C. meter; from switch-block terminal No. 4, connect a lead to the negative post of the meter.

Loosen the screws holding the switch to the panel. Insert two springs between the panel and switch supports; one on each side of the switch block. Solder a lead to each spring before they are put in place. Push them in just far enough to make contact with the switch blades, the spring on the right making contact with the

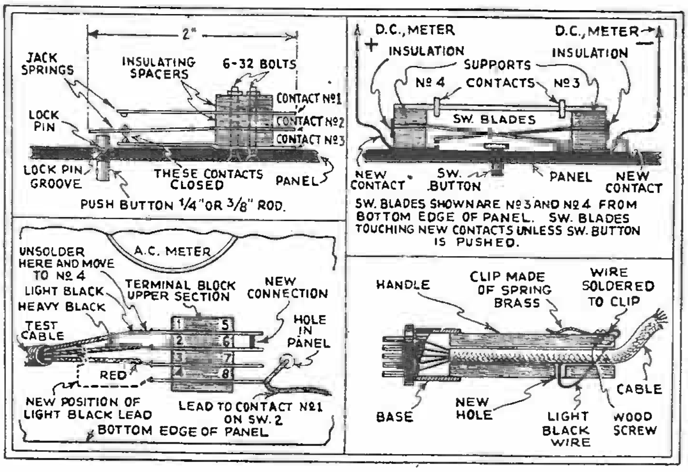

Fig. 1, upper right. *Connections of the new switches.*
Fig. 3, upper left. *Construction of new jack switch.*
Fig. 4, lower right. *Construction of the analyzer plug.*
Fig. 6, lower left. *Cable connections to the switch.*

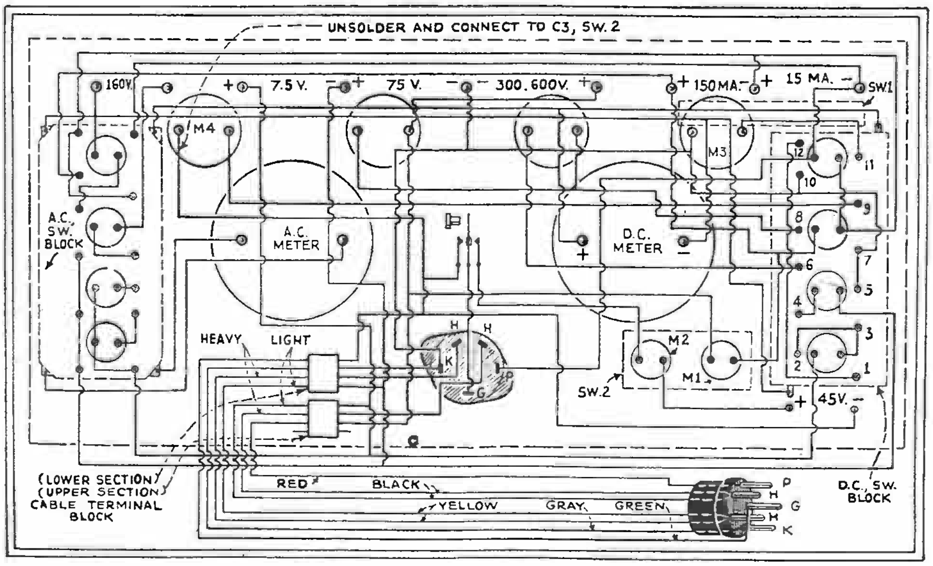

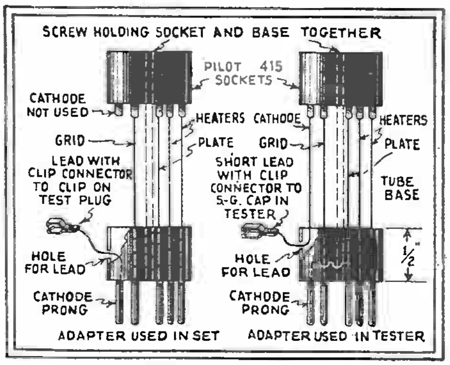

Fig. 5, above.

Diagram of connection and construction of the adapters used in the analyzer.

Fig. 2, left.

Complete schematic circuit of the analyzer after it is rewired. The location and connections of the new units may be understood by carefully following the text and the diagram.

third switch blade, and the left one with the fourth blade. The switch blades are Nos. 3 and 4 from the bottom, the edge towards you. See Fig. 1 for details. Be sure that there is no chance of the blades touching the upper contacts until connection with lower contacts has been broken. When the new contacts are in place, and when you are sure that they are O.K., tighten the screws holding the switch in place. The new contacts are connected to the D.C. meter as shown in Fig. 1.

For normal operation of the meter, leave the switch up. To reverse the meter for S.G. (screen-grid) readings on the 75 volt "C" bias scale or reverse the D.C. filament, push the button down.

Multipliers

To make room for the two new switch multipliers M1, M2 and M3 are moved to different positions. Remove the screw holding M1 to the panel. Lift M1 up about an inch from the panel, and bend the wires, making it parallel to the panel. As the connecting wires are not strong enough to hold it in place, additional support is provided by a piece of bus bar, one end of which is fastened under the screw holding the socket in place. Bend this so that its end goes through the hole in the multiplier. This will hold it in position; a little sealing wax on the wire will hold the spool in place.

Remove the screw holding M2 to the panel and unsolder the connecting wires. One of these wires goes to the upper spring of the grid-test switch. This wire is replaced with a piece of bus bar extending straight up for 1¼ ins., then bent at a right angle towards you for about an inch. Solder one contact of M2 to this bus bar. The other contact on M2 is connected to the positive post of the 4.5-volt test battery. The bus bar supports M2 in a vertical position between the two meters and just above the socket.

M3 is treated in the same manner as M1, the supporting wire going under the head of the screw holding the adjoining multiplier. As the holding screw of this multiplier will be too short, it should be replaced by one of the screws formerly used to hold one of the other multipliers. A piece of tape wound around M3 and over to the bottom of the D,C. meter will hold it in place.

Connect the new switches in the positions indicated in Fig. 2. These switches should be of such type that when released they will automatically return to normal position, that is, with the blade and one contact closed. Toggle or midget jack switches may be used, but as they do not operate automatically, special care must be taken to always return them to the normal closed position otherwise trouble will result. If you wish to make your own switches see Fig. 3 for details. The switch operates in the same manner as the regular Jewell type. a close study of which will reveal further details of the lock pin, lock pin groove, and operation. I used, for the lock pin, a No. 18 wire brad forced through a hole (slightly smaller) drilled in the push button. The groove is 3/32 in. deep.

Drill all the holes from the front, if drilled from the back. the edges will chip and spoil the appearance of the panel. Mark the location of the holes with a scriber; use a small drill for drilling the guide holes; replace the tester in its case, and using the proper size drill, enlarge all the holes. In drilling the holes be very careful. when almost through, not to let the drill slam through and hit the wires and multipliers underneath the panel. Before mounting the switches, solder leads to them. as this will be hard to do afterwards. Switch No. 1 is mounted at the top of the panel in line with the other D.C. switches. Switch No. 2 is mounted at the bottom of the panel between the socket and the switch. See Fig. 2.

Providing a lead from the tester to the screen-grid tubes in the set is the next operation. Rather than have an extra wire loose on the cable. we should use one of those already in the cable. Examination of Fig. 2 shows seven cable-wires, plate, grid. cathode, and a light and heavy wire to each of the heater prongs. By making the following changes one of these wires, the light-black one. can be used as the control-grid lead.

Move the light-black wire from contact No. 1 to contact No. 2 on the upper section of the cable terminal block, Fig. 6. Connect contacts Nos. 5 and 6 together, drill a hole in the panel as indicated. A lead, with a clip long enough to reach the cap of a screen-grid tube in the tester, is passed through this hole. Tie a knot in the lead to prevent it from pulling out and solder the end to contact No. 8, upper section of the cable terminal block. From this same contact connect a lead to contact No. 1 on switch No. 2. The inside connections of the screen-grid lead are now completed.

The handle of the test plug should be carefully removed from the base by taking out the two screws holding it in place. Disconnect the wires from the base, making a note of the prongs to which they connect, and pull the cable out of the handle. About ¾ in. from the top of the handle drill hole about 3/16 in. into the side of the handle. (See Fig. 4.) On the opposite side of the handle fasten a clip made of spring brass. Be careful that the screw does not hit the cable. Cut off the cable covering for about two inches and wrap some thread around it to prevent further unraveling. Take the light-black lead which has been disconnected from the, heavy one and pass it through the new hole in the handle.

Push the remaining wires through the handle and connect them to the base in the original manner. Be sure that the wires are correctly connected and that there is no danger of short circuits inside the base. The wire which comes through the side of the handle is now connected to the clip on the other side of handle. Fig. 4 shows details.

This completes the connection for the screen-grid tubes. When making tests, the cap in the set slides under the clip on the test plug and the cap on the tester provides connection to the tube in the tester. Wrap some tape around the clip on the plug handle so as to prevent shocks if your hand comes in contact with the shields.

You are now ready to connect the switches. As one connection is already made to switch No. 2, start with that one. (See Fig. 7.) Unsolder the wire connected to C1 on M4 and connect it to contact No. 3 on switch No. 2. As the position of the multiplier contacts may not be the same on all testers, it is best to trace this lead. Reference to Fig. 2 will show that it connects to one side of the grid test switch, to the negative post of the 4.5-volt test battery and to contact No. 5, lower section of the cable terminal block. Connect C1 on M4 to contact No. 2, or switch blade of switch No. 2. Connect another wire from C1 on M4 to contact No. 1 on switch No. 1. Unsolder the wire connected to contact No. 7, upper section, cable terminal block and connect it to contact No. 2 on switch No. 1, which is the switch blade. Connect contact No. 3 on switch No. 1 to contact No. 7, upper-section of cable terminal block.

This completes the rebuilding of the tester. The engraving can be done with a sharp pointed instrument and engraver's wax or white lead.

Switch No. 1 is marked 300V., S.G. & C.G.
Switch No. 2 is marked 75V., C.G.

If push button type switches are used, mark the button with a line parallel to the lock pin in the same manner as the Jewell switches are marked.

Before replacing the tester in the case, clean it carefully to remove all dirt and solder that may later get into the switches and cause trouble.

The pentode adapter is easy to make. Two UY type tube bases and two Pilot No. 215 subpanel sockets are needed. Cut off the tube base ½ in. from the bottom. Drill a hole in the center of the tube base large enough to pass a 6/32 in. machine screw. Drill a hole in the side of the tube base, opposite the Cathode prong, large enough to pass a lead through. Cut off the prongs of the sockets leaving just enough to solder a connection. Use insulated wire for connections. (See Fig. 5 for details.)

The changes made do not effect the normal operation of the tester except when testing '80 type tubes. Current can now be tested in both plates. Test the current in one plate in the usual manner. To test the other plate, press the "300V.S.G." button and the "150 MA." button.

Testing Tubes

Test plate and filament voltages as usual: plate current as usual, if the screen-grid voltage is less than 75 volts press the D.C. "Rev." button and "75C Volts" button. If it is more than 75 volts, press the "300V," and "Plate 300V." buttons. Screen-grid current can be tested by pressing the "300V.S.G." and the "15 MA." buttons. For control-grid voltage, press the "75V.C.G." and "75C Volts" buttons. For tube test, press "MA." button, connect a lead to the 300V binding post and touch it to the cap of tube.

Place the adapter with the long lead on the test plug and fasten the lead to the clip on the handle. The adapter with the short lead is placed in the analyzer socket and the lead connected to the screen-grid lead on the analyzer. Test plate and filament voltages as usual.

A PENTODE DEMONSTRATION ADAPTER

MANY owners of sets incorporating a '45 output tube could easily be convinced of the desirability of having their sets changed to '47 pentode operation if they could have a demonstration of the greater sensitivity of this tube and the tonal effects which may be obtained in their own sets.

However, the '47 pentode adapters on the market, designed for plugging into a '45 socket, do not enable the tube to give anything near the results of which it is capable. It is necessary to change the grid bias and also to supply the screen-grid with *separate* voltage, not merely to connect it in parallel with the plate, as is done by some adapters.

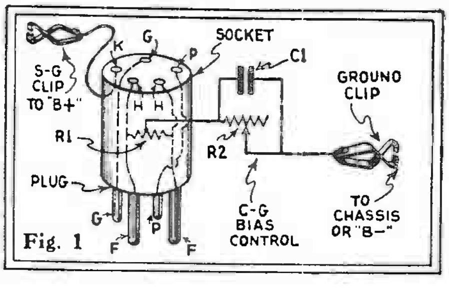

Fig. 1

The adapter, shown in Fig. 1, consists of a five-prong socket in a four-prong base; the grid, plate, and filament leads being strapped across from the base to the socket, with a lead from the socket's "K" terminal being connected to a clip which can usually be hooked to the speaker field connection, or other external high-voltage source, for the screen-grid potential. There is also a center-tapped filament resistor R1 included, with a 1,000-ohm variable resistor R2 by-passed by a 1.-mf. fixed condenser C1, leading to another clip for the connection to the chassis. The control is then adjusted to give correct grid bias, using a voltmeter.

If the demonstration results in a sale, as it usually does, the installation is then made in the proper way, changing sockets and resistors inside the set, the adapter being used only for demonstration purposes.

Of course the bias resistor in the set may be replaced, or shunted by another, depending on which is most convenient. The output transformer designed for '45 operation, while not considered ideal for use with a pentode, in actual practice works practically as well as a pentode transformer.

Supreme "Model 19" Checker

The circuit and arrangement of a new instrument, designed by a maker of precision testing equipment, for use by dealers and Service Men

Fig. A
The appearance of the "Model 19."

SOME men get along splendidly during boom periods but, at the first sign of a depression, they give up in despair and fade out of the business picture. Others refuse to accept defeat and, when times are bad, they expend extra effort, try out new ideas, and often make more money than they ever made before.

This point is strikingly illustrated by the experience of radio dealers and Service Men who have adopted the use of a tube checker to pep up their business. The explanation is found in the very nature of radio. The action of a radio receiver depends fundamentally upon the action of its vacuum tubes. Considered in this light, every radio receiver consists essentially of a collection of parts designed to connect a group of tubes in a certain predetermined manner, and to supply these tubes with definite voltages. When these functions are properly performed by the radio set, it will operate satisfactorily, *provided that the tubes themselves are normal.*

Modern tube checkers are highly refined instruments, and bear little resemblance to the earlier devices bearing the same name. A fitting instance of this trend in test equipment design is the "Supreme Model 19" tube checker; this test instrument, embodying many unique features, is illustrated in Fig. A, and its schematic circuit is shown in Fig. 1.

Layout of the Instrument

It tests at the correct filament voltage every type of tube, including the new 2-volt, the 3-volt and the 7½-volt tubes. This matter of proper filament voltage, while testing, is of the utmost importance; if improper voltages are used, readings obtained are meaningless. The "Model 19" also tests *both* plates of full-wave rectifiers, and offers a positive test on screen-grid tubes. This last is another important feature, in view of the constantly-increasing use of screen-grid tubes in modern radio receivers. The "Model 19" is so advanced in its design that it will even test pentodes.

Six separate sockets, plainly marked, provide for every type of A.C. or D.C. (battery) tube in general use; since each tube has its own testing socket, no switches are required and hence maximum speed in testing tubes is attained. An ingenious arrangement is provided for testing 2½-volt power tubes in the 3.3-volt socket. The circuit characteristics are such that the current-resistance drop introduced by the 2½-volt tubes is exactly correct for reducing the applied potential to the 2½ volts required.

The various pin jacks used have insulated heads to prevent accidental short-circuits and shocks. In addition to the "control-grid" jack, mentioned in connection with the screen-grid test, there is a space-charge "Sp Ch" jack, which provides an effective potential of 10 volts for the space-charge connection of pentodes. There are also two other pin jacks, marked "H," which furnish a 3.3-volt filament potential for overhead-(top-)heater filament tubes. Suitable leads are included with the checker for making the various pin-jack connections.

The meter employed is a large 3½-inch D'Arsonval-type G. E. direct-current milliammeter, in a full bakelite case. Both the 80- and the 8-mil. scales are fully calibrated. The 80-mil. scale is normally in the circuit, but, when the 8-mil. button is pressed, a shunt is taken out of the circuit (see schematic wiring diagram Fig. 1), making the 8-mil. scale effective. When the "Screen Grid—80" button is depressed, an effective positive screen-grid potential of 70 volts is applied to the screen-grid and pentode sockets. When the "Grid Test" button is depressed, the normal zero-bias control-grid potential is changed to an effective negative potential of 3 volts.

The difference between the two plate-current readings, with a fixed difference of 3 volts applied to the grid, constitutes the mutual conductance index of the tube. This method gives the readings a definite value unobtainable by the frequently-used methods of employing an uncontrolled variable voltage with free grid.

The Supreme checker utilizes a large-capacity transformer supplying secondary potentials of 125, 70, 10 and 3 volts and filament potentials of 7½, 5, 3.3, 2 and 1½ volts. The size and the quality of the transformer employed assure adequate filament current.

Principle of Operation

To determine the condition of a tube under test, it is necessary merely to check the meter readings with the ideal limits, which are plainly marked on the instrument panel beside each socket. This eliminates waste of time in referring to charts, curves, or other data sheets.

The "Model 19" can be used by anyone, since it is extremely easy to operate. In fact, written instructions are hardly necessary; observing a few simple precautions makes it impossible to injure this tester. In fact, positive protection is afforded to the meter against damage through the attempt to test short-circuited tubes.

The tube readings, used as reference indices, have been developed in co-operation with a number of the largest manufacturers of vacuum tubes. In compiling them, thousands of tubes were tested; comparisons were made on the most elaborate factory testing equipment available, and the tubes were tested under actual operation. Through this procedure, fairly definite limits for operative tubes have been made available.

The table reproduced here gives the panel markings for all tubes on which three readings are employed. The first column gives plate current, which is read on the 80-mil.

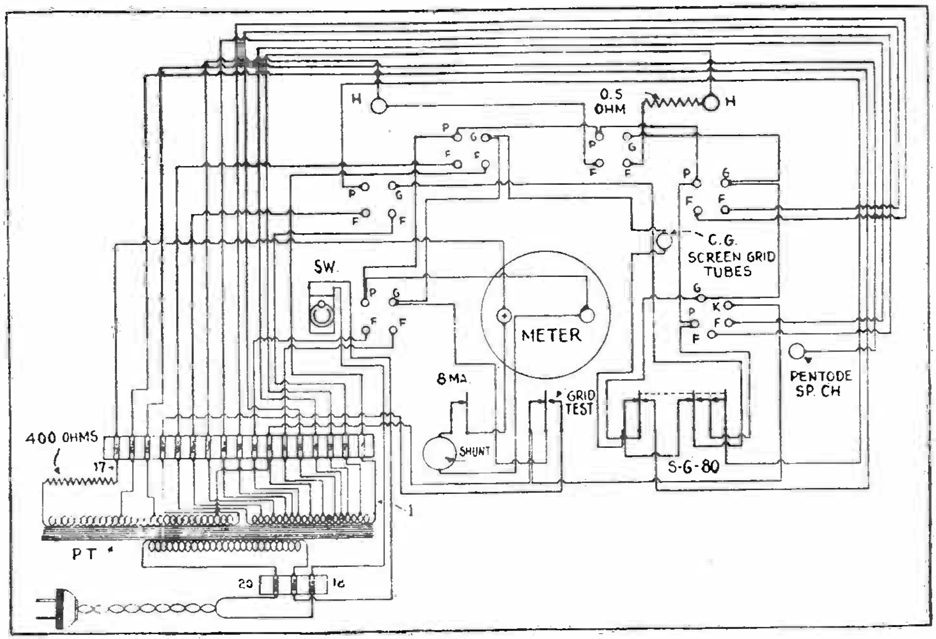

Fig. 1
The internal connections of the checker, which is arranged to take any type of tube, with the minimum of switching. The central D.C. meter is automatically connected to any tube which is plugged into the appropriate socket.

scale of the meter unless the value is less than 8 mils.; in which case the 8-mil. scale button is depressed for a closer reading. If the plate current reading (at zero grid) is not greatly in excess of the first figure shown in the readings on the panel (Col. I), the tube may be classed as operable, if it will conform to the other test reading limits. The plate current with negative bias (about 3V.) is read on the meter when the "Grid Bias" push-button is depressed. If this reading is not *less* than the second figure shown in the markings on the panel (Col. II), the tube under test is operable, provided it conforms to the other two limits.

The third figure shown in the panel readings, opposite the type of tube (Col. III) is the "Change," representing the difference between the "Plate Current" and the "Plate Current with Negative Bias." If this change is not less than the limiting figure given, the tube under test may be classed as operable, provided it conforms to the other two limits.

A Typical Test

To make the above still clearer, an actual test will be given as an illustration. Suppose that it is desired to test a '24-type screen-grid tube; this is placed in the 5-prong socket, designated for '24, '27, and 484 tubes. The tube checker is connected to any ordinary 50-60 cycle 100-120-volt A.C. power supply, by means of a detachable rubber-covered cable furnished for this purpose. A short connector, with pin plug on one end and control-grid clip on the other, is then plugged into the jack on the panel marked "Cont. Grid," and the clip is fastened to the cap of the tube.

The "On-Off" toggle switch is thrown to the operating position, and the tube is allowed to attain its full working temperature. In order to read the plate current of the screen-grid tube, it is necessary to press the red push-button marked "Screen-Grid—'80." Since the reading obtained is less than 8 mils., the "8-mil. Scale" button is also depressed.

In the case of the tube under test, a reading of 2.6 is obtained. Comparing this with the ideal "Plate Current" reading of 3, it is seen that the obtained reading does not exceed the ideal; and hence the next test is made. This is obtained by holding down both "Screen Grid-'80" and "8-mil. Scale" buttons while depressing the "Grid Test" button. The reading obtained on the tube being checked is 1.3; since this is greater than the second ideal reading, the tube again conforms to requirements.

By subtracting the second reading from the first, we obtain 1.3 as the "Change." Since this is greater than the ideal limiting figure, the tube has conformed to all requirements and is accepted as a satisfactory tube.

While the foregoing description may seem somewhat involved, the actual performance of the test is simplicity itself and, ordinarily, takes less than a minute to complete. The current is snapped on, the two required readings are taken as soon as the tube is warmed up, comparison is made with the readings stamped on the panel—and the test is finished.

In the case of a '71A or a similar tube, having a comparatively high plate-current reading, the only push-button used is the "Grid Test" button. In testing an '80 type tube, the reading on the meter after the tube reaches operating temperature is the plate current of one plate. The other plate reading is obtained by pressing the "Screen Grid—80" button. The readings of both plates of full-wave rectifiers should not be less than the panel markings "40." This represents a minimum; and higher readings indicate proportionately better - quality tubes. A marked difference between the readings on the two plates may account for hum or distortion; and such tubes should be carefully observed in actual operation.

Tube Type	(I) Plate Current	(II) Current with "—" Bias	(III) Change in Current
'01-A	8.0	2.0	0.4
'10	10.0	5.0	1.6
'12-A	14.0	4.0	1.5
'20	6.0	3.0	0.1
'22	3.2	1.0	0.3
'24	3.0	0.8	1.0
'26	8.0	3.6	1.0
'27	8.0	3.0	1.4
'30	6.5	2.4	0.3
'31	13.0	5.0	0.2
'32	3.0	1.0	0.8
'40	1.0	0.5	0.1
'45	24.0	12.0	1.4
'50	26.0	12.0	1.0
'71-A	30.0	12.0	1.0
'99	3.0	1.0	0.1
182-B	25.0	12.0	1.5
183	30.0	22.0	2.0
484	7.0	2.5	1.0
		Second Plate	
'80	40.0	40.0	
'81	35.0		

The Checker as a Salesman

A number of methods have been suggested and are being used for increasing sales with the tube checker. Among these are free testing of tubes for customers, prominent display of the tester on the counter to create interest and inspire confidence, combination sales-service calls to check up the condition of tubes in use in the customers' home, etc. Many other sales-producing plans are constantly being evolved.

One dealer has adopted the plan of using his "Model 19" to educate his clientele to the fine points of tube purchasing; he displays above his counter a large chart showing the ideal limiting readings contained in the table. When a tube is purchased, the readings obtained on the tube checker are plainly marked on a dated label, which is pasted on the tube. The customer is then able to check these readings with those on the chart. As a result of this frank method of doing business, this dealer's average weekly tube sales have increased 100 per cent. since the installation of the tube checker. In fact, tube sales in one chain of stores have been so stimulated that the owner is rapidly clearing out his stock of radio sets and specializing on tubes only; and the most prominent display is a tube checker!

The "Model 19" is available in two types: a counter model and a portable model; the latter comes equipped with a lid, carrying handle and detachable cable. The lid is mounted on slip hinges, so that it can be readily removed; hence the portable model can also be used as a counter instrument. The mechanical construction of both types is identical. The "Model 19" checker weighs only 6 pounds; its dimensions are 3¼" x9 7/8" x 6 1/16". It is housed in a selected hardwood walnut-finished case, which is practically indestructible. In the event of accident, this rugged housing offers maximum protection to the instrument assembly.

CONTINUITY METER

FOR custom set builders handling receivers of specially high quality, one manufacturer of instruments has produced the equipment shown in the illustration, as a compact piece of equipment for checking the work. A battery is included, together with a meter, variable resistor and test prods; circuits may be quickly tested, resistances determined, and the assembly proved before delivery is made.

(*Scott Transformer Co., Chicago, Ill.*)

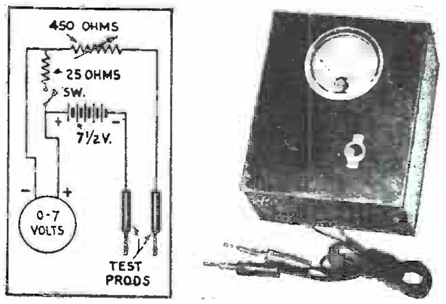

The circuit and outward appearance of the Scott continuity meter, useful for many purposes.

A DYNATRON VACUUM-TUBE VOLTMETER

IN Fig. 1 is shown the wiring diagram of a vacuum-tube voltmeter I use. Its advantage is that very small voltages can be measured with it without the use of an ultra-sensitive meter.

An ordinary 0-1. milliammeter is sensitive enough to measure such small voltages as would not operate an ordinary V.T. voltmeter using the more standard three-element tube. An input of 0.05-volt gives a reading of approximately 0.2-ma.

The potentiometer is used to accurately adjust the plate voltage.

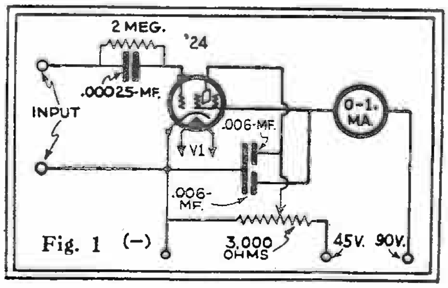

Fig. 1

A New All-Wave Oscillator for Modern Servicing

With features of special value in superheterodyne work

ULTIMATE simplicity distinguishes the new Supreme "Model 70" modulated oscillator; by means of an ingenious circuit arrangement, both the intermediate and the broadcast bands, from 90 to 1500 kilocycles, are covered with a *single set of inductance coils* and tuning condenser. One '30 tube is used in the instrument, and may be supplied with current from dry-cell batteries (the shielded case provides room for the batteries); or it may be connected to the light-line. An output meter (which is also combined with an ohmmeter, for measuring all resistances up to 1 megohm) is furnished; but the oscillator may be obtained without the output meter by those who already have an output meter, or a set analyzer containing one.

A dummy antenna enables the oscillator to be coupled to the radio receiver under test; the output from the oscillator being under control by a tapered variable resistor. Complete shielding eliminates the possibility of picking up from the oscillator energy which has not passed through the dummy antenna.

A more detailed analysis of the instrument may be obtained by reference to the diagram. It will be noted that the familiar Hartley oscillator circuit is employed, including two inductance coils L1 and L2 tuned by the variable condenser C1. The plate current of the tube is fed through the R.F. choke RFC-1; the feedback effect taking place through the blocking condenser C2. The oscillatory circuit L1-L2-C1 covers a band of *fundamental* frequencies between 90 and 250 kilocycles. For all higher frequency-bands, the *multiples,* or *harmonics,* of the fundamental frequencies are employed. By this means, frequencies up to 1500 kilocycles are generated in the single tuning circuit without the use of complicated switching arrangements. Complete calibration charts are supplied, enabling the operator to determine the frequency with an accuracy within one-half of one per cent.

With this wide tuning range, the instrument is adapted to all commercial intermediate frequencies, as well as to other intermediate frequencies between 90 and 550 kilocycles which may be employed in future superheterodynes; thereby eliminating the possibility of the instrument's becoming obsolete.

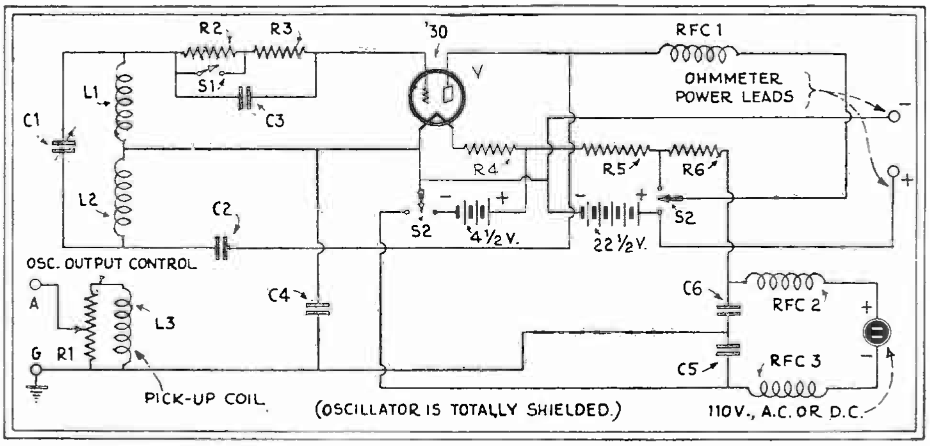

The values used in the Supreme "Model 70" are: R1, 500 ohms (tapered) R2, R3, 60,000 ohms; R4, .42 ohms; R5, 300 ohms; R6, 1591 ohms. Condenser C1, .0005-mf.; C2, C3, C4, C5, C6, 0.01-mf. L1-L2 have a total inductance of 6.2 millihenries. Opening S1 gives A.F. modulation. (Latest models have two more filter condensers across the light-line, outside the chokes.)

Operation of the Oscillator

In the grid circuit of the tube is placed a grid condenser, C3, and grid-leak resistors R2 and R3; R2 may be short-circuited by means of the switch S1. With the switch open, "grid-leak modulation" takes place; that is, the grid condenser charges and discharges at an audible frequency and modulates the oscillator output. (The tone's slight variation over the tuning range is an index of the tuning multiple.—*Tech. Ed.*) This method of modulation is used only when the oscillator is supplied with battery current or current from the 110-volt D.C. line. When the A.C. line is employed, the output is automatically modulated by the frequency of the supply voltage; in this case, the switch S1 may be closed. Obviously, it will work on an A.C. line of any commercial frequency.

The Supreme "Model 70" oscillator in its carrying case; with the output meter at the left.

Coil L3, shunted by the variable resistor R1, serves as a dummy antenna, coupled to the main oscillatory coils, from which it picks up energy to be delivered to the set under test. The fixed condensers C4, C5 and C6 isolate from the oscillator the dummy antenna's grounded connection to the set.

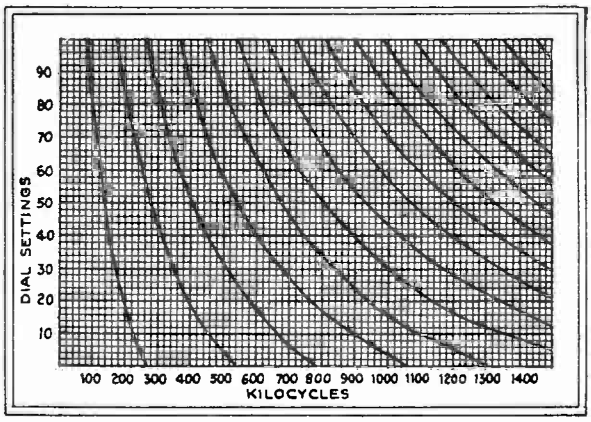

The curve at the very left is the fundamental frequency of the oscillator; its 15 harmonics, in their order, cover the whole range of servicing. The difference between two oscillator settings immediately indicates the position of one frequency adjustment, with relation to the other.

By means of a single toggle-switch (shown in the diagram as the two switches S2) the oscillator can be changed over immediately from battery to lamp-socket operation, or vice versa. For battery operation, a single 4½-volt "C" battery, and a 22½-volt "B" battery or the equivalent, are employed. These fit within the shielded oscillator case in compartments provided.

For socket power operation, a detachable cord and plug are provided. From the 110-volt D.C. line it is necessary to have the correct *polarity;* it may be necessary to reverse the plug if it is placed in the lamp socket the wrong way at first. If a 220-volt power supply system is encountered, the oscillator may be operated in series with a 2000-ohm, 10-watt, resistor.

The R.F. chokes, RFC2 and RFC3 are placed in the power-line circuit as shown; these prevent the radio-frequency energy from the oscillator from leaking out into the power line and interfering with measurements on the set. In general service practice, the 110-volt A.C. or D.C. line should be used; the batteries being employed only where power is not available. In this way the life of the batteries is prolonged, and the cost of operation becomes negligible.

The resistor R4, which cuts the 4½-volt battery's voltage down to the required 2 volts for the type '30 tube, has a value of

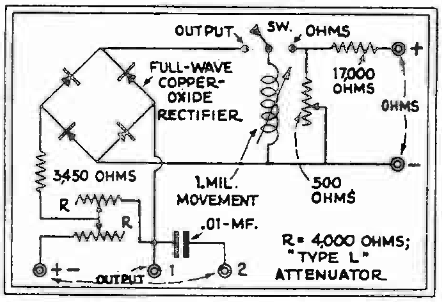

Circuit of the output meter, showing the use of the rectifier to measure alternating current, with uniform accuracy to 5000 cycles.

about 42 ohms. The resistors R5 and R6, together with R4, cut a 110-volt supply down to the correct value. The 22½-volt plate supply is taken from the line voltage at the connection between the resistors R5 and R6. It will be observed that no filtering is employed; as the pulsating or alternating line voltage is used for modulation purposes.

Extra terminals are provided for the 22½-volt battery on the panel of the instrument; so that this battery may be used in connection with the ohmmeter for measuring resistances. These terminals are clearly shown in the diagram.

The output-ohmmeter provided with the instrument is a very ingenious combination of a D'Arsonval meter movement with a full-wave copper-oxide bridge rectifier. An arbitrary range is provided for the radio output indicator, together with an accurately-calibrated ohmmeter, ranging from 0 to 1 megohm. This will indicate circuit continuity of even higher resistance values.

The mechanical construction has been designed for maximum compactness, light weight, durability, appearance and simplicity of operation. The black bakelite panel, with verichromed markings, presents a pleasing appearance. It is mounted on an aluminum plate which fits into a cast aluminum tray; giving complete shielding and great mechanical strength. A hardwood carrying case (furnished separately) may be used for transporting the oscillator and output meter. The control dial is of special design, affording a positive vernier action, which is necessary for fine settings.

Practical Applications

The busy Service Man is called upon to service all kinds of receivers. The more complicated superheterodynes, which are now becoming very popular, require very accurate adjustments, to give full satisfaction. Hence, the use of a service oscillator of simple design, but very flexible in its applications, is essential; while a thorough knowledge of its use is an important factor.

To use the oscillator, first connect the two output terminals of the oscillator (marked A and G in the diagram) to the antenna and ground binding posts of the set under test. Special marked leads for this purpose are provided with the instrument.

The output meter is then connected to the set output. Special leads, equipped with UX tube adapters, serve to attach the output meter to the two plate leads of a push-pull amplifier output or to the plate lead of a single output tube and the set's chassis.

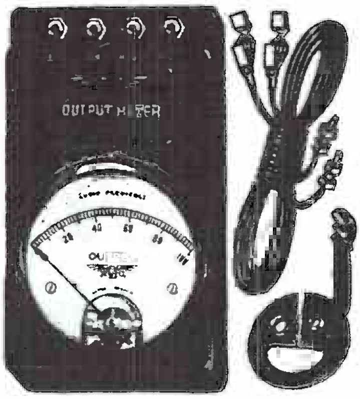

The Supreme portable copper-oxide-rectifier meter used with the "Model 70" oscillator.

First turn the radio set "off." Then remove the set power tube or tubes; place these in the adapters; and put tubes and adapters back in the sockets. The other ends of the leads should then be connected to the terminals provided for them on the output meter; of these, there are three: a common terminal and two others marked "1" and "2." Terminal "2" has in series with it a fixed blocking condenser to prevent the passage of D.C., but allow the set's A.C. output to pass through.

The common terminal and terminal "2" should be used for all sets; but terminal "1" and the common terminal may be connected across a voice coil when so desired. The switch on the output meter should then be thrown to the "output" position, and the attenuator control knob to the full counter-clockwise position. Then turn the set "on," and place the oscillator in operation.

The oscillator is now supplying a signal, which is received and detected by the radio. As soon as the radio tubes warm up, the signal will be indicated by a reading on the output meter's scale. It will be necessary to tune the radio and the oscillator to the desired signal; and also to adjust the attenuator control on the output meter until the scale reading is properly indicated at a convenient point on the arbitrary scale. The output from the oscillator may be varied by means of the variable resistor R1 in the diagram, and the attenuator on the output meter may be varied also; thus, a wide range of outputs can be covered. In this way, the necessary aligning adjustments can be made, on both broadcast and intermediate amplifiers, the maximum scale reading on the output meter indicating the condition of resonance.

Measuring Pentode's Output

The pentode output tube is now becoming very popular, and manufacturers are beginning to incorporate this type of tube in their receivers. As this tube has five prongs, it will be necessary to use a five-hole adapter on the output meter leads for making connection. As an alternative, the output meter's leads may be connected directly across the voice coil of a dynamic loud speaker; the output meter is so arranged that it will not materially affect the impedance of the voice coil. This instrument will also be found useful, when adjusting for minimum hum level in A.C. receivers.

It will be noted that the modulation of the oscillator signal is fully 100%, when using the A.C. lighting line; it is also nearly 100% when employing grid-leak modulation. This is a distinct advantage when making tests on receivers which use power detection. For, if a strong unmodulated signal is applied to the input of a power detector, it is possible to overload the detector without obtaining any loud-speaker output. Then, too, if the R.F. energy is only slightly modulated, in some sets this may result in two apparent resonance peaks; and the set appears to be broadly tuned. Therefore, it is necessary that the oscillator signal be modulated as near to 100% as possible.

To use the output meter for measuring resistances, simply throw the switch to the "Ohms" position, and connect the proper leads provided with the instrument to the 22½-volt terminals on the oscillator panel. With the test leads shorted, set the "zero ohm" adjuster till the meter reads zero; then the meter will indicate the values of resistors, placed between the two set terminals.

Although fundamentally simple in design and operation, this instrument can be used for all oscillator tests outlined in the various manufacturers' service manuals. It offers servicing possibilities heretofore available only with highly-complicated and expensive apparatus.

OUTPUT METER

COMPARISONS of output, as well as checking and balancing of circuits, not only in receivers, but in public-address and projection equipment, are facilitated by the use of the device shown. It has five ranges: 1.5, 6, 15, 60 and 150 volts, A.C., which are obtained by the range-selector switch below the dial. The non-inductive impedance of 4,000 ohms is constant for all ranges. The instrument may be connected across the output of a receiver: but, if it replaces a voice coil directly, must be shunted by a resistance approximating that of the coil. It is 5½x3⅝x2⅛ inches over all, and weighs about 26 ounces.

(*Weston El. Instrument Corp.,*
Newark, N. J.)

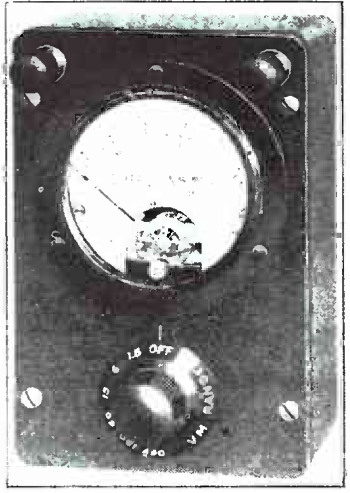

CHAPTER V

Meters

Measuring Instruments or Meters From the Basis of All Electrical Tests. The Theory of Meters, How They Work and How To Use Them Are Here Described.

The Story of Meters

IN the last few years the use of electric meters for quick and accurate testing of radio and sound equipment has increased by leaps and bounds.

Looking at commercial meters today, we can hardly visualize the path of heartbreaking development that has extended through hundreds of years; groping for the fundamental principles, wading through false beliefs and hypotheses, all of which finally led to the development of the first *measuring* instrument—the "galvanometer."

Magnetic and static electricity was known as early as 600 B.C., but even then, and until 1600 A.D., no one realized the distinction between the two.

Later, a relation between electricity and magnetism was established, and from Ampere's idea of a simple needle suspended above a wire carrying current, came the findings of Pouillet, in 1837, where the *degree of deflection* of the needle from its original position indicated the intensity of the current flowing in the circuit.

It was realized early in the development of the art that a system of convenient standards would be necessary. Consequently, a system of practical units was adopted, which were derived from the C.G.S. (centimeter, grams, second) System.

This system of units led to the development of various complicated but interesting devices for the accurate determination of electrical values. (A detailed discussion of this system and its uses will be found in S. Gernsback's *"Radio Encyclopedia,"* Second Edition.—Tech. Ed.)

"Absolute" Measurements

The first method was shown by Faraday. He placed a pair of clean copper plates in a solution of sulphate of copper (blue vitriol) and passed an electric current through the solution. The current dissolved some of the copper from one of the plates and deposited an equal weight of copper on the other plate. Faraday showed that there is an exact relation between the strength of the current and the amount of metal removed or deposited.

Lord Rayleigh employed silver plates and a solution of silver nitrate. He found that there is deposited in one second, .001118 gram of silver, or 4.025 grams per hour. The amount of current causing this deposit is called an "Ampere." One ampere will deposit 1.177 grams of copper per hour.

The "International Standard Ampere" is now legally defined by International agreement in terms of the amount of silver deposited by it, as stated above. Figure 1A is a rough outline of how the measurements were made.

In 1898, Professors Ayrton and V. Jones designed a device called an "ampere balance." This instrument is illustrated in Figure 1B, and consisted of a very delicately balanced pair of scales, on one scale of which were placed weights of known value, and from the other was suspended a large movable coil. The latter then was placed above a fixed coil rigidly mounted on a base. The scale was adjusted to balance by adding weights to counteract the weight of the suspended coil. Upon passing current through the coils, the moving coil was pulled down by the magnetic lines of force. The additional weights necessary to bring the scale back to balance gave an accurate indication of the *weight* or force of the electric current. Thus it was determined that the addition of every "gram of weight" represented 980 *"dynes* of force."

The difficulty of applying this system was the spur which caused Professor Fleming to devise, in 1883, a much easier scheme for measuring voltages or currents. He made use of a then-existing instrument called a

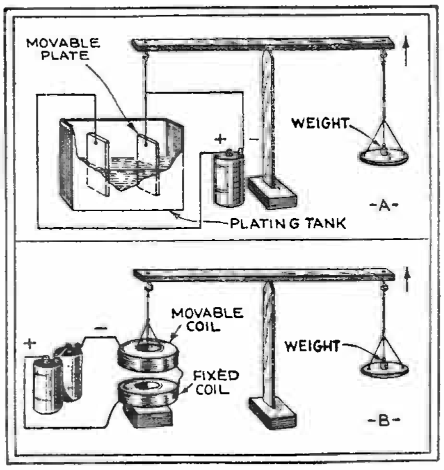

Fig. 1
At A is illustrated the electro-deposition method of measuring current; at B, dynamic method.

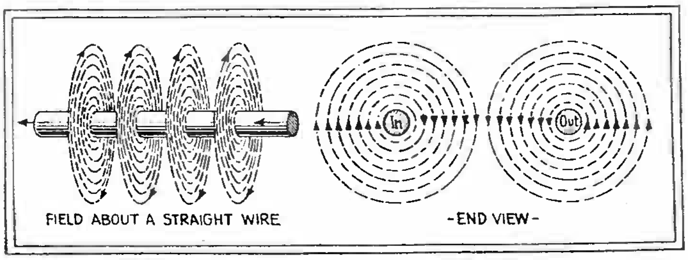

Fig. 4, above
The magnetic lines of force at right angles to the direction of flow of current in a wire.

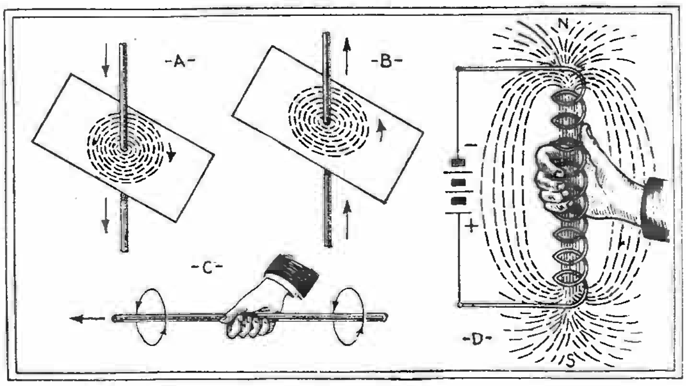

Fig. 5, right
Specimens, A and B, of the magnetic field around a wire. Use of the "rule o' thumb" is indicated: at C, for a wire; and D, for a coil.

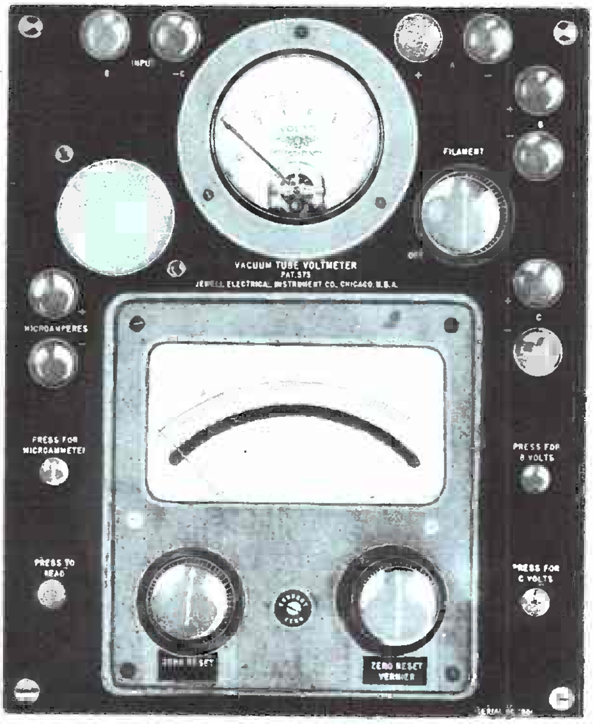

A modern Vacuum Tube Voltmeter (front view).

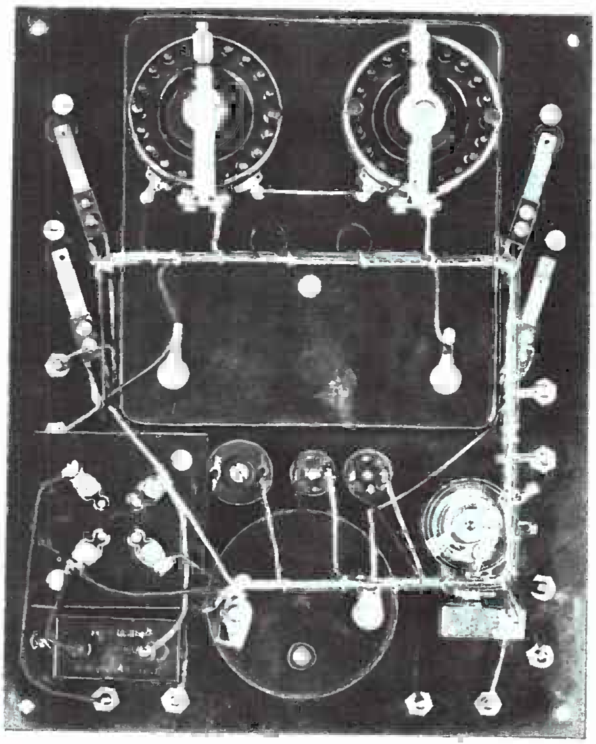

A modern Vacuum Tube Voltmeter, rear view.

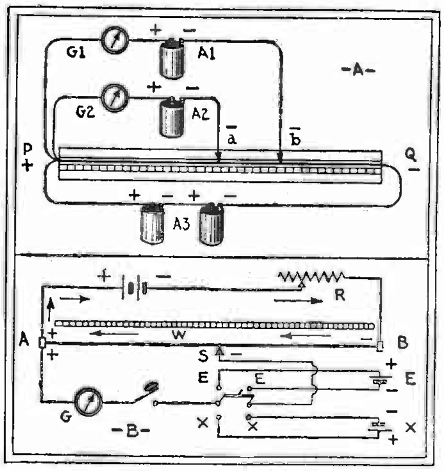

Fig. 2

At A, above, the Poggendorff "potentiometer," and; B, a commercial adaptation.

"potentiometer," Fig. 2, devised by Poggendorff in 1841, and modified by Fleming.

If a resistance "slide-wire" P-Q is stretched over a scale, and a steady (battery) current is passed through it, a drop in voltage across this wire will result.

Connected to the positive end of this wire are two other wires 1 and 2, with sliding contacts on the free ends, and in series with these wires are placed two galvanometers **G**. It will be seen that current flowing through **P-Q** will be partially deviated through wires 1 and 2 and the galvanometers connected in series.

In the circuit of wires 1 and 2 are inserted two different sources of electricity, A1, A2, so placed that their E.M.F's. (electro-motive-forces) or "voltages" (the term honors *Alessandro Volta*, an Italian physicist) tend to oppose the voltage drop produced in the wire P-Q by the current source **A3**. If the sliding contacts be moved until the voltage drop from the sliders to the negative end of the main wire **P-Q** just balances the E.M.F. of the inserted cells, A1, A2, the galvanometer will indicate zero. That is, the E.M.F. in each circuit being opposite in polarity and equal in strength, no current can flow through the galvanometer. The E.M.F. of the two cells is then proportional to the E.M.F. drop across **P**-a or P-b (depending upon which meter is being read). The slide-wire may be calibrated by the substitution of known values of **E.M.F.**

The simple slide-wire type of potentiometer thus proves useful for *comparing* "voltages," and is commercially available today; being rated as of low-potential or high-potential type, depending on the resistance of the slide-wire. See Fig. 2. (See also, "A Home-made Slide-wire Bridge" in the Feb., 1931 issue.—*Tech. Ed.*)

The principle of operation of the commercial slide-wire potentiometer is the same as above described, and the scale is calibrated in the proportion of the total resistance of the wire, or in volts. In Fig. 2B the standard voltage is shown at E, and the voltage to be measured at X.

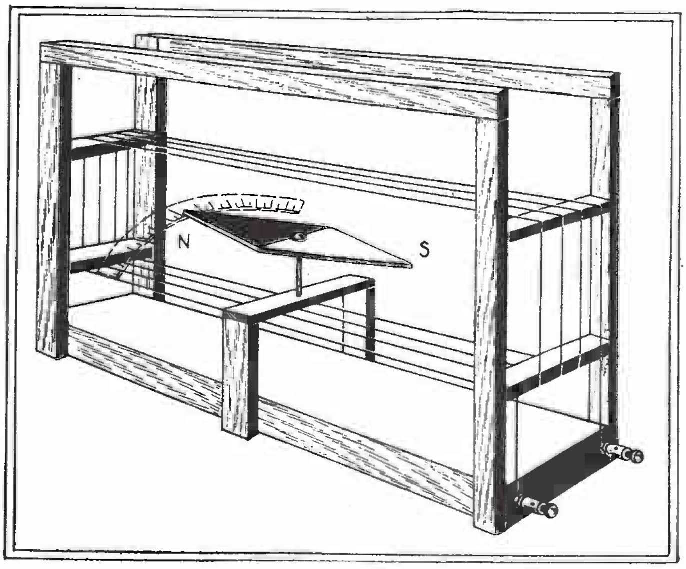

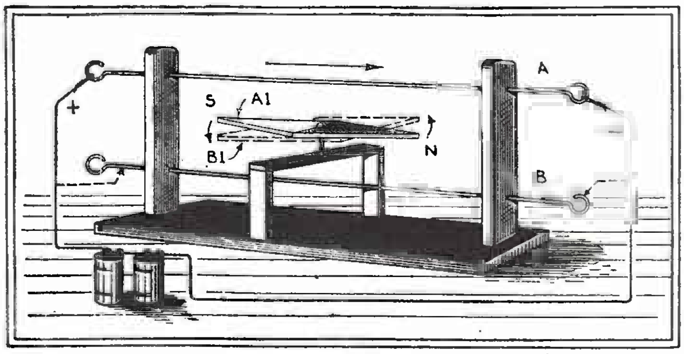

Fig. 3, above, Oersted's deflection demonstrator; Fig. 6, left, Schweigger's "multiplier."

First Principles

The fact that a current from a battery when passed along a length of wire would create a "magnetic field," was first noticed by H. C. Oersted, of Copenhagen, in 1820. He found that a suspended magnetic compass needle always set itself when near a current-carrying wire, so as to lie at right angles to the length of the wire; and the north-seeking pole of the needle deviated to one side when the wire was *above* the needle: and to the opposite side when the wire was laid below the needle, Fig. 3. He correctly concluded that this was due to the current creating a magnetic field of force around the wire, the direction of these lines of force being in circles, which lie in planes perpendicular to the direction of the wire, as shown in Fig. 4.

There is a definite relation between the direction of current flow and the direction taken by these lines of force, as shown in A and B, Fig. 5, a fact which enables us definitely to determine the *polarity* of any "electromagnet."

Rule O' Thumb

A useful reference is called the "rule of the thumb,"C, Fig. 5. Simply grasp the wire in the right hand with the thumb extended along the wire in the direction of the current flow, "+" to "—". The curved finger tips will then indicate the direction of the *magnetic field.*

In the instance of a coil, grasp the solenoid with the right hand *so that the fingers point along the wires in the direction of the current flow.* The thumb then points to the north pole—that is, the thumb points in the direction of the magnetic flux passing *inside* the coil, D, Fig. 5.

A man named Schweigger, about 1821, modified Oersted's original idea, and wound many turns of silk-covered copper wire over and under a pivoted magnetic compass needle, in the manner illustrated in Fig. 6. This was called a "multiplier" because it increased the effect of the current on the needle. This apparatus was the first "galvanometer" ("galvano-", after *Luigi Galvani,* an Italian physicist).

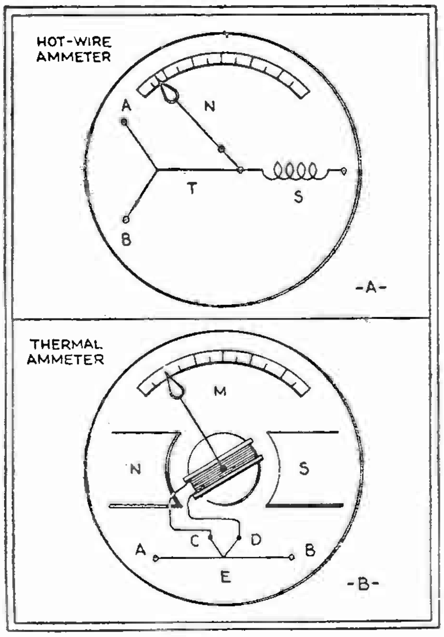

Fig. 7

"A.C." meters. At A, "hot-wire" type, and; B, a "thermocouple" instrument.

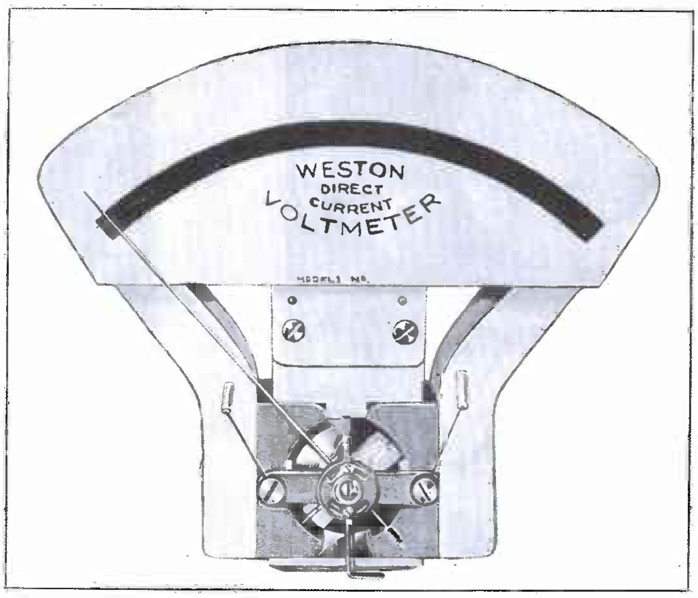

Fig. A

A commercial meter of the "D'Arsonval type. The moving coil turns between the tips of an inverted "U" permanent magnet. Its connections and polarity are shown in Fig. 9. Actually, the direction of current flow is a matter of definition; although it is generally assumed that current enters a meter at the terminal marked "positive," and leaves at the "negative."

Since the invention of the galvanometer, measuring instruments have been developed for measuring electricity in all its ramifications.

There are meters for measuring the *quantity* of electricity flowing in D.C. and A.C. circuits; for measuring the *force* at which the electricity circulates through the circuit; and for measuring the *power* developed by the combination of this quantity and force.

Galvanometers sometimes were called "rheometers," from the Greek *rheo,* meaning "to flow," and *metron,* meaning "measure." The "rheostat" (-stat," Greek *stators,* "standing") is the only survival of this terminology; meaning a resistance which can be varied to regulate the flow of current.

Meters may be classified into two major types: (A) Those operating on magnetic principles, and; (B), Those known as "hot wire" instruments which operate by virtue of the expansion of a resistance wire when heated by an electric current. Figure 7B, shows a modification of the magnetic principle where an alternating current heats two *dissimilar* metals; C and D make contact with the hot wire A-B. The heat produced at the junction or "thermo-couple," E, generates a voltage which is carried to the D.C. meter, M, which indicates in proportion to the amount of current flowing in its circuit. (The theory for this odd effect is still in doubt.) These methods are used to measure "high frequency" currents.

The hot wire ammeter depends for its action upon the expansion of a metal wire when it is heated. The wire A-B is connected to the source of radio frequency current, the heat of which expands the resistance wire. Spring S, through thread T, exerts a pulling action on this slackened wire, the resultant motion causing the needle N to move over the scale. The degree of movement depends upon the amount of current flowing in the wire, A-B, as shown at A, Fig. 7.

Any instrument which will measure electricity in small quantities may be called a galvanometer, but the general definition is that it is a magnetic device used merely to

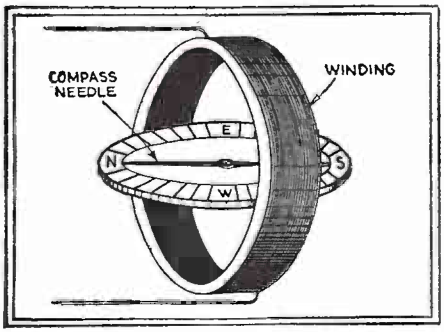

Fig. 8

The "tangent galvanometer."

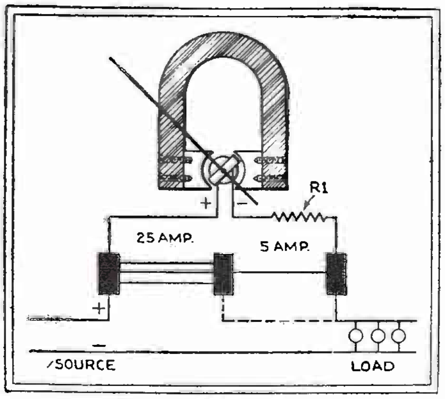

Fig. 9

Schematic circuit of the meter illustrated in Fig. A. Resistor R1 compensates coil constants.

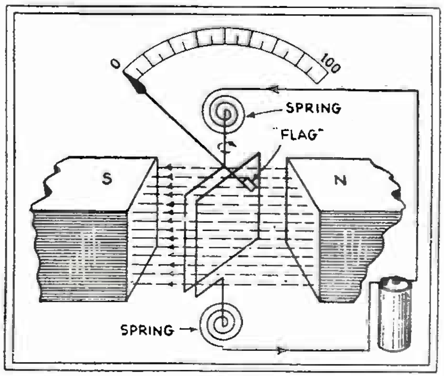

Fig. 10

The D'Arsonval principle of operation.

indicate the *presence* of electricity in a circuit.

The Tangent Galvanometer

A simple type of galvanometer is shown in Fig. 8 and is known as a "tangent" galvanometer. (The genesis of this term lies in the fact that *the current strength is proportionate to the tangent* of the needle's deflection.—*Tech. Ed.*) Briefly, it consists of a magnetic compass laid horizontally within a form on which is wound a coil of fine wire.

When the coil is not connected to a battery, the magnetic needle of the compass will point North and South, drawn by the attraction of the earth's magnetic poles.

If the coil is placed in a vertical position, as shown in Fig. 8, and a current passed through the coil, the degree of deflection will be a function of the intensity of the current flowing in the circuit.

The device is quite accurate and may be calibrated by passing through it known quantities of electricity, and noting the respective positions of the magnetic needle on the scale. Ninety degrees on the scale, in either direction, left or right, is the limit of usefulness of this device. If, for instance, the passage of 2 amperes through the coil causes the needle to deflect 80 degrees, then a deflection of 45 degrees represents some lower value of current.

The reversal of the applied potential will cause a change in direction of the needle's movement. Thus, the device can be used to indicate "polarity."

For those interested in experimenting, the coil can be made up in several sections having leads so that the section can be brought out to binding posts, in order that the coils may be used singly, in series, or in parallel, as desired.

D'Arsonval Movements

Today, galvanometers are made with a large "permanent" magnet (so called) of horseshoe shape, with the coil of wire mechanically supported on "jewelled" bearings so that it is free to turn between the pole faces of the magnet.

When the current passes through the coil, the magnetic lines of force formed around the coil cause it to turn, with a tendency to enclose as many of the lines of force as possible. This construction is known as the "D'Arsonval" type, and forms the basis for our standard types of D.C. voltmeters and ammeters. Figures 9 and 10 show the mechanical design and the electrical circuit; and A, a photograph of this most important contribution to the meter art.

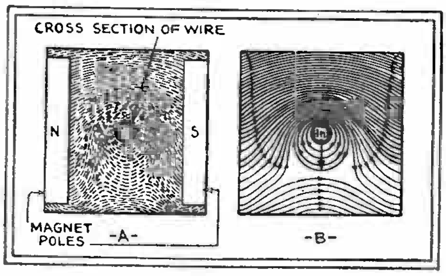

Fig. 11

Magnetic field between the two poles of a permanent magnet at A; and at B, the distorted magnetic field when the wire IN is carrying current.

It is interesting to note in this type of instrument the results obtained when its two magnetic fields are combined; such as the circular field produced by an electric current flowing through a wire, and a parallel field produced by two permanent magnets, Fig. 11. Here it will be seen that the lines of force are crowded together on the upper side of the wire and tend to force it down. (This principle underlies the operation of the electric motor, as well as measuring instruments.)

The permanent magnet type of D'Arsonval movement (illustrated in Fig. 12, with the poles marked N and S), is of the common or horse-shoe shape. The coil A-B (Fig. 12) is held to the structure in such way that it can freely revolve.

The current which is to be measured is led into the coil via the springs in such a way that it goes in at B and out at A. The field set up around wire B strengthens the field of the permanent magnet N-S *above* the wire B, and weakens it *below*, thereby forcing the wire B downward. At the same time, wire A sets up a field which strengthens the field of the permanent magnet N-S *below* A, and weakens it *above*, thereby forcing wire A *upward*. This action rotates the coil so that the needle (rigidly attached to the coil) swings across the scale.

It should be noted that the coil and the pointer are mounted at right angles to one another. This is done so that, as the pointer swings over the 0 to 100 scale, the moving coil (swinging through the same angle) always distorts the field of the permanent magnet to the same extent. This results in equal increases in deflection for equal increases in current throughout the entire scale.

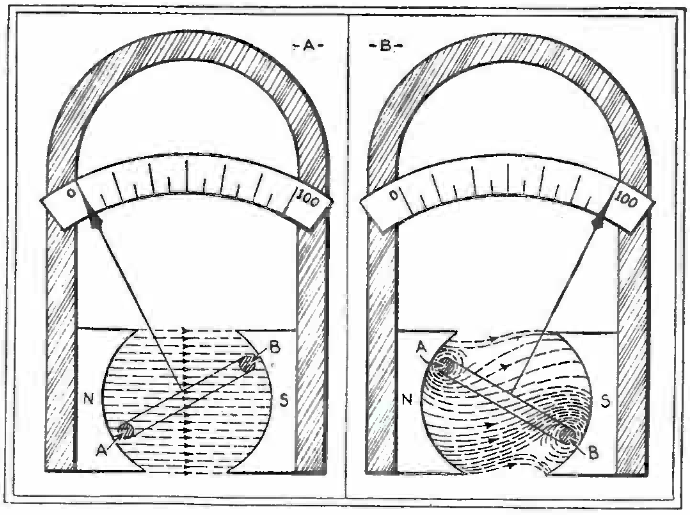

Fig. 12

At A, left, the field distribution in a D'Arsonval movement when the moving coil is not carrying current; at B, right, the field distribution when the moving coil is carrying current.

Calibration

The "arc," or portion of the circle through which the pointer swings, in this type of instrument depends on the strength of the magnetic field set up in wires A and B—which, in turn, depends upon the current flowing in the coil.

For instance, if the scale were to be calibrated in units of current, let us say *milliamperes* (thousandths of an ampere), we would have a *milliammeter. It is possible that the scale could be calibrated in volts and the meter used as a voltmeter,* for the resistance of the wire A-B is constant, and the current through the coil would be proportional to the voltage across the terminals A-B.

Thus, by winding the coils with any one of various sizes of high-resistance wire, a definite value of resistance can be obtained for the coil, and meters for measuring small or large quantities of electricity will result.

In commercial instruments, resistance, R1, in Fig. 9, is placed in series with the moving coil, and is called a "calibrating" resistor.

This furnishes a means for compensating any inaccuracy in winding the coil, and permits quick and accurate calibration; otherwise, it would be necessary to undertake the laborious job of removing or adding turns of wire to the moving-coil (as in the very first instruments) in order to obtain correct scale indications.

Looking at a modern commercial meter we cannot conceive the labors of those men who spent their lives to conquer the measurement of that force, "Electricity."

The "instrument problem" received much attention from such distinguished minds as Deprez and D'Arsonval in France, Kelvin, Perry and Ayrton in England, Siemans and Hummel in Germany, and many others of equal fame, in the time succeeding Oersted's and Schweiggers' crude devices.

Dr. Weston, in the United States, after many years of strenuous effort developed the first permanent magnet pivoted moving coil type of instrument. This development of Dr. Weston revolutionized meter design, and placed the art of electrical measurement on a new plane.

In the determination of the effectiveness of an alternating current, the square root of the average squares of all the instantaneous values of alternating current is taken, and expressed in units of a given direct current which will produce the same power or heating effect as the given alternating current. The value so determined is called the effective or R.M.S. value, and is .707 of the maximum value.

Referring to Fig. 1A, *on page* 154 there are two bars or vanes of soft iron hung vertically in the center of a coil. If no current is applied to the coil, there will be no movement as shown. When a direct or alternating current is passed through the coil as indicated in Fig. 1B, the bars repel each other. Regardless of the direction of current flow, the upper end of the two pole pieces are magnetized either N or S, depending upon the direction of current flow, and the lower ends either S or N. Following the law that like poles repel, we find that the bars are thrust apart.

The commercial models have one of the vanes fixed in position in the coil and the other vane free to move on a pivot, the indicating pointer being fastened to the moving vane to facilitate movement over a scale as indicated in Fig. 1C. It will be noted that the movable pole piece can be displaced only by rotation caused by the repulsion.

The rotation of this pole piece is opposed by springs which do not carry current as is the case in direct current meters: the the movements of the iron vane depends on the strength of the magnetic field set up in the coil, and the field strength of the coil depends upon the amount of current flowing in the winding. When the current flows through the coil, the movable iron vane rotates to such a position that the opposing force exerted by the spring and the magnetic force of repulsion become equal. The indicator then stops and shows the scale value of the current flowing in the circuit.

In the alternating current voltmeter, the field coil consists of a fairly large number of turns of comparatively fine wire. As it is impossible to wind a coil with sufficient resistance to prevent a flow of current which would damage the winding, a resistance is placed in the circuit so that the current flowing through the coil is reduced to a satisfactory value.

Ammeters have coils wound with comparatively heavy wire. The size of the wire depend on the current ranges of the meter.

The Solenoidal Meter

An instrument that employs a very simple movement is known as the "solenoidal meter." Referring to Fig. 4, we see that it consists of a coil with a plunger C fastened to the indicating arm B. This arm is pivoted at point P so that the plunger can move freely into the coil as indicated.

Current flowing through the comparatively low resistance coil "sucks" up the soft iron plunger, causing the indicator to move over the scale which can be calibrated by sending known values of current through the coil. A weight W controls the action of the plunger and the damping of the indicating pointer is accomplished by the eddy currents in the plunger. This type of movement is inaccurate, due to the large errors caused by hysteresis losses which are traceable to the excessive mass of the moving parts.

This movement will be found only in the less costly instruments.

Hot-Wire and Thermocouple Types

High frequency alternating current measurements are generally based on the heating effects caused by passing a current through a strip of metal. Hot-wire meters depend for their action on the expansion of a metal wire when heated, the wire generally used for the heater being platinum. The latter type of A. C. meter is used extensively for high frequency measurements, but it uses a considerable amount of power, is easy to burn out, and is not permanent in calibration.

A practical application of a copper-oxide meter.

The wire AB, Fig. 5 is selected for its ability to expand when it is heated by the high frequency current, and is connected to the circuit in such a manner that the current to be measured will flow through it. The spring S tends to hold the wire AB taut through thread C. The resultant motion caused by the expansion of the wire causes the pointer P, which is rigidly attached to roller R, to move over the scale. The movement of the pointer depends upon the amount of current flowing through the wire.

In the case of the thermal ammeter, we find that the voltage generated at the junction K of the two dissimilar metals CD, Fig. 6, in contact with the wire AB, is impressed across the direct current millivoltmeter M.

The heat in wire AB is generated because of the A.C. energy flowing through the circuit, and is equal to that which would be generated for a certain number of amperes of direct current. The deflection of the needle indicates the *effective value* of A.C. energy as do the iron vane and solenoidal meters.

The thermal junction generally used is made up of the metals copper and constantan, and is heated by a fine wire through which the current flows. To increase the sensitivity, the junction is generally mounted in a small glass bulb.

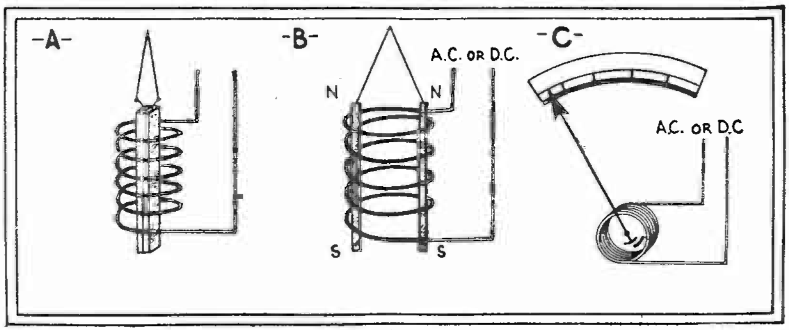

Fig. 1
The principle of operation of the iron-vane movement used in A.C. meters is shown above.

The voltage developed by the thermocouple is directly proportional to the temperature, and the temperature of the heated wire is proportional to the square of the alternating current flowing in the heater; the reading of the meter then, is proportional to the *square* of the current through the heater wire. This meter is sometimes called a "current-squared" meter.

Since a D.C. meter reads *average* values, the scale of this meter may be marked so as to read the *square root* of the average value, which as we have seen before, is the effective value of the A.C.

Copper-Oxide Meters

With the development of the modern radio set, a demand for sensitive voltmeters of low power consumption was created. Direct current movements which can satisfy these requirements can be readily built with a sensitivity of 1000 ohms per volt. This

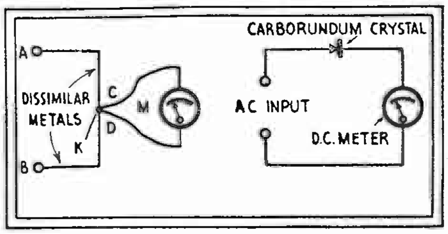

Figure 6 left. The thermo-junction at K generates a D.C. voltage which is applied to M.

Figure 7 right. Observe that the crystal rectifier is used to rectify the A.C. voltage to be measured.

Note: The Figure numbers referred to in the text mean the illustrations on the same or adjacent page, as in some cases where an article is exceptionally long the numbers are duplicated; that is, there may be more than one Fig. 2, for example. Always refer to the nearest illustration.

means that a current of one milliampere is sufficient for a full scale deflection. This may be done by simply rectifying the A.C. voltage to be measured and applying it to the D.C. meter.

There are several methods whereby we can rectify the alternating current to be measured. The first is by the use of a crystal rectifier, Fig. 7. The crystal, however, is generally too unstable in operation and needs to be adjusted quite often, and is also subject to burn-out at comparatively low current values. The second is by the use of a tube rectifier, the circuit of which is shown in Fig. 8. The ordinary design of such a device generally limits its application because it is subject to tube failure, and every time the tube needs to be replaced, the instrument must be re-calibrated. The same instrument is sometimes used as an output meter, when the indications are for comparison only.

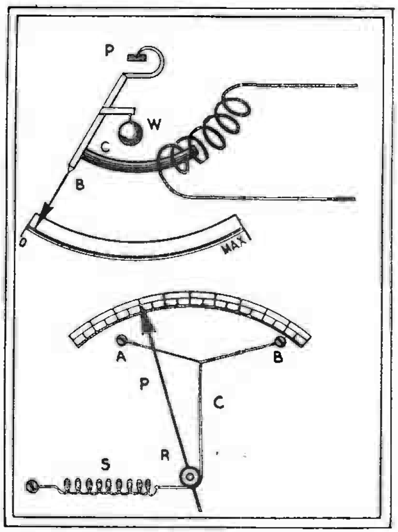

Figure 4 above. The magnetic field generated by the coil "sucks" up the plunger C, moving the pointer B over the scale.

Figure 5 below. The expansion of the wire AB causes the pointer to move over the scale.

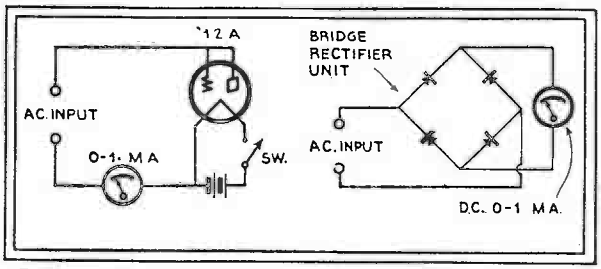

Figure 8 left. The use of the vacuum tube as a rectifier used for measuring A.C. voltages.
Figure 9 right. A bridge connection of dry-disc rectifiers may be used for measuring alternating voltages with a D.C. meter.

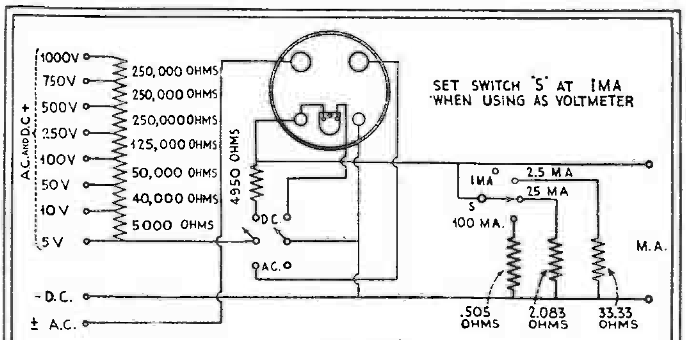

Fig. 12

Complete circuit diagram illustrating how a D. C. Meter may be used as an A. C. voltmeter, and both as a D. C. voltmeter and ammeter.

The third and most desirable method of rectification is by the use of the copper oxide rectifier, Fig. 9. This type is satisfactory from the standpoint of ruggedness, sensitivity, and constancy. Its main disadvantage is that the meter indicates "average" values instead of effective values.

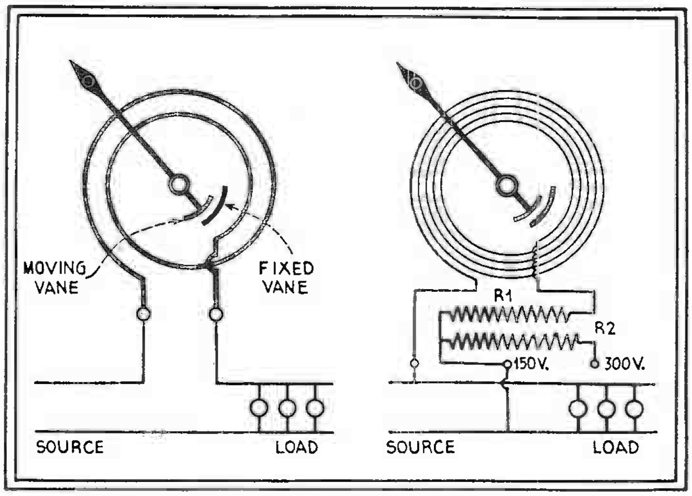

Figure 2 left. Illustration of the mode of connection of the moving vane type of A.C. ammeter.
Figure 3 right. Connections of the multipliers in the moving-vane type of A.C. voltmeter.

This introduces an inaccuracy in readings which becomes apparent when the voltage to be measured has a distorted wave form. Fig. 10 shows a graph representing a distorted sine wave which would cause an error of about two per-cent. In most cases, however, such small inaccuracies are of but little importance to the Service Man.

The wave form of most of the voltages encountered in a radio set will closely approximate sine waves; thus, for practical purposes the distortion and its consequent error due to the rectifier will be negligible. Figure 11 is an example of the actual oscillograms taken of the voltages within a Radiola "60" showing the close approach of the wave form to a sine wave.

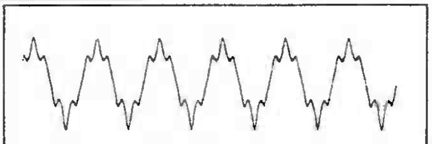

FIG. 10

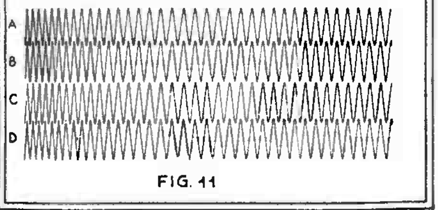

FIG. 11

Figure 10 above. An illustration of a distorted sine wave.

Figure 11 below. At A and B is shown the wave form of the unrectified filament voltage in a commercial receiver, and at C and D the unrectified plate voltage. Note that they are all pure sine waves.

Rectifier type instruments have a large capacitance due to the rectifier, which causes a change in scale deflection as the frequency of the applied voltage to be measured is varied. The effect of this capacity is not great at low frequencies, but above about three thousand cycles the error is augmented by the increase in frequency. This is not as serious an objection as it appears to be at first glance, because the Service Man seldom requires absolute accuracy above the standard commercial frequencies.

Momentary over-loads of three to ten times the normal voltage rating do not damage the rectifier, thus reducing to a minimum the danger of destruction of the unit due to over-load.

A Universal Meter

Many interesting and serviceable pieces of equipment can be constructed using the standard milliammeter in conjunction with a copper-oxide rectifier. Figure 12 indicates an arrangement which gives accurate indications in A.C. and D.C. circuits, the maximum ranges being limited only by the desires of the constructor. In this circuit a Weston 301 universal meter is used and is provided with a double scale. The upper scale is used when the instrument is connected for alternating current measurements and has a range from 0-5 volts, and the lower is the D.C. scale and is also calibrated from 0-5 volts. The sensitivity of both the A.C. and D.C. scales is 1000 ohms per volt.

The meter has four external connections and a shunt which is calibrated for the meter. The alternating current ranges are thus 5 volts and 1 milliampere and the direct current ranges are 50 millivolts and 1 ampere.

Thus by the selection of the proper values of multipliers and shunts the instrument can be used to measure D.C. and A.C. voltage and currents. The voltage and current ranges indicated in the diagram cover most of the requirements of the Service Man.

It is interesting to note how versatile a simple meter is. By using the proper shunts there is theoretically no limit to the amounts of currents that can be measured.

UNIVERSAL A.C.—D.C. METERS
WESTON MODEL 301 and JEWELL PATTERN 88

Connection Diagram

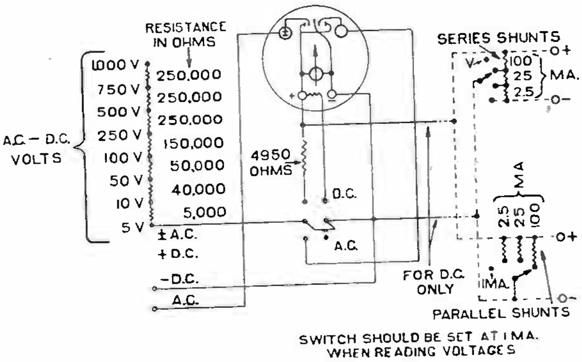

Designed for the serviceman who desires to build a multi-range instrument to fill his particular testing requirements. These instruments are for use with external shunts and external resistances for measuring D.C. voltages and currents and A.C. voltages.

The instruments are of the permanent magnet moving coil type with a self-contained copper oxide rectifier for the A.C. measurements. They are self-contained for 5 volts and 1 milliampere A.C. and 50 millivolts and 1 milliampere D.C. They have multiple scales for A.C., D.C. and ohms resistance.

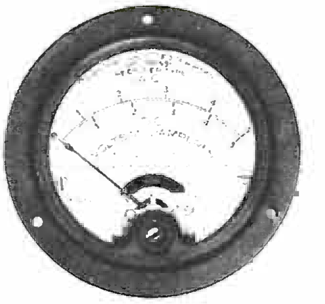

Weston Model 301 Jewell Pattern 88.

When a meter is used to measure difference of potential, it is important that the current consumed by the meter be not so large as to appreciably increase the load of the circuit. If the current consumed by the voltmeter is large, the effect will be a reduction of the voltage being measured, with the result that the value indicated on the instrument is not the actual value of potential which is present when the meter is out of the circuit. Thus, the value of an instrument as a voltmeter is determined by the amount of current it consumes.

A convenient means of specifying the sensitivity of a voltmeter is by the number of ohms resistance for every volt in the meter.

This ohms-per-volt value of a D.C. meter is equal to the *total* resistance of the instrument divided by the *maximum* voltage indicated on the scale; or

$$\text{Ohms-per-volt} = \frac{\text{total resistance of meter}}{\text{maximum voltage}}$$

The total current consumed by a meter *for full scale deflection* is, therefore,

$$\text{Current} = \frac{1}{\text{Ohms-per-volt}} \text{ or } = \frac{\text{maximum voltage}}{\text{total resistance of meter}}$$

If the range of a meter is to be extended, resistors (called multipliers) are added in series with the meter as indicated in Fig. 1. Referring to this figure, the multiplier Rm is in series with the voltmeter V, and the meter is shown shunted by a resistor Rv which represents the resistance of the meter. Letting E1 represent the normal range of the meter, and E2 the range desired, the value of Rm necessary to extend the range can be found by use of the following equation:

$$\text{Rm} = \text{Rv} \left(\frac{\text{E2}}{\text{E1}} - 1 \right)$$

For example: if E1 is 200 volts; Rv, 10,000 ohms; and E2, 300 volts; then

$$\text{Rm} = 10{,}000 \times \left(\frac{300}{200} - 1 \right) =$$

$$10{,}000 \times 0.5 = 5{,}000 \text{ ohms.}$$

Since the above problem is a representative one, it would be necessary to add a 5,000-ohm resistor in series with the meter as a multiplier in order to extend its range to 300 volts. From the above, it can be seen that by the proper selection of multipliers, it is possible to extend the range of a voltmeter to any desired value. A group of resistors connected in series, as shown in Fig. 2, will enable the user to obtain the desired range by moving switch S to the proper tap.

It is sometimess desirable to know the reverse problem; that is, knowing the resistance of both the meter and its multiplier, how much its range has been extended.

The multiplying factor indicating the number of times the voltage scale of the meter has been increased is found by the ratio

$$\frac{\text{Rv} + \text{Rm}}{\text{Rv}}$$

Substituting the values in the example previously given, we have

$$\frac{10{,}000 + 5{,}000}{10{,}000} = 1.5$$

Therefore, any indication on the meter, with the multiplier in the circuit, should be multiplied by 1.5 to obtain the correct value of the voltage.

It is possible that the Service Man may not know the internal resistance of a meter. If such is the case it may be obtained by connecting the meter as shown in Fig. 3. Then, using ohm's law:

$$\text{Rv} = \frac{\text{voltage read on meter}}{\text{current read on milliammeter}}$$

If calibrated resistors of approximately the same value as the internal resistance of the meter are available, the half-scale deflection method may be used.

The procedure is simple. First, short-circuit resistor R in Fig. 4 and then apply sufficient voltage E to obtain a full-scale deflection. If the full-scale reading is 100 volts, apply 100 volts. Then increase R until the reading of the meter is exactly one-half full-scale. The value of resistance R then equals the resistance of the meter. This becomes evident from the fact that when resistors are in series, and equal in value, then the same current will flow through both of the resistors, and consequently the voltage drops across each of them will be the same.

D.C. Ammeters and Shunts

There are many cases in which the current range of a milliammeter is too low for the conditions at hand. It is then necessary to increase its range by shunting some of the current around the meter, only permitting enough to pass through the

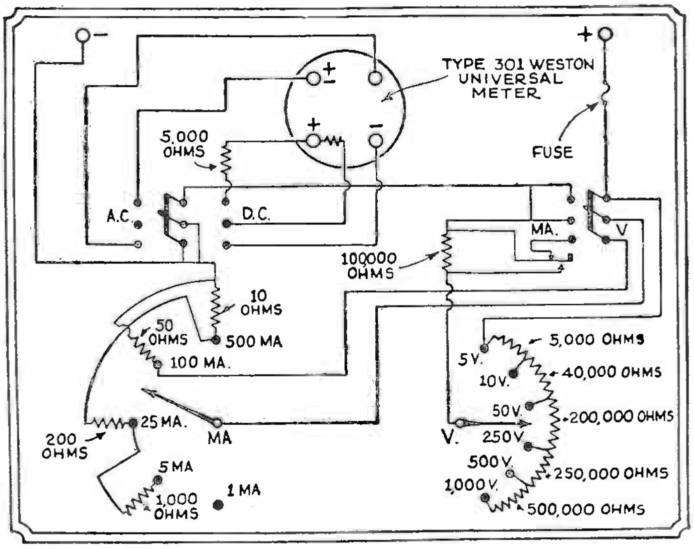

Fig. 12

Circuit diagram of a complete A.C.-D.C. voltmeter and milliammeter. All values are indicated on the diagram for the convenience of Service Men desiring to construct this universal meter. It is fully protected against burn-out by three separate and distinct means.

moving coil to actuate the pointer. This is indicated in Fig. 5, in which R1 represents the resistance of the meter A, and R2 the shunting resistor.

It is well to note at this time that current multipliers are always used in parallel with the instrument, while the voltage multipliers are always in series.

Any resistor placed in shunt will increase the range of the meter by the ratio

$$\frac{R2 + R1}{R2}$$

If a Weston 301 D.C. 0-1 milliammeter has a resistance of 27 ohms, then a shunting resistor of 27 ohms will increase its range by the factor 2, as can be seen by substituting numbers for the letters given in the formula above.

$$\frac{27 + 27}{27} = 2 \text{ (the ratio of the increase)}$$

Thus the meter having a normal maximum reading of 1 milliampere, will have its range doubled or extended to 2 milliamperes. Figs. 6A and 6B show two methods of shunt connections which are commonly used.

The average Service Man often finds that it is impossible to obtain resistors of low ohmic value of sufficient accuracy for use as shunts, consequently the following scheme should be used in such cases.

Referring to Fig. 7, R2 is the shunting resistor and R1 is one that is placed in series with meter A.

Now if the range of the D.C. Weston 0-1 milliammeter is to be extended to 1 ampere, and the internal resistance of the meter is 27 ohms, it would be necessary to increase its range 1,000 times, as shown by the formula

$$\frac{\text{I2 (current range required)}}{\text{I1 (current range of meter)}} = \frac{1}{.001} = 1{,}000.$$

This is a very high ratio, and when it becomes necessary to use a shunt that can carry 999 milliamperes while the meter carries only 1 milliampere for full scale deflection, the shunt resistance will have a value of

$$\text{R (shunt)} = \frac{\text{R (meter)}}{\text{(factor of increase)—1}} = 0.0273\text{-ohm.}$$

It is very difficult to obtain a resistor of 0.0273-ohm for this purpose and, therefore, the use of a resistor in series with the meter will enable us to use larger values of R2 which can be readily obtained.

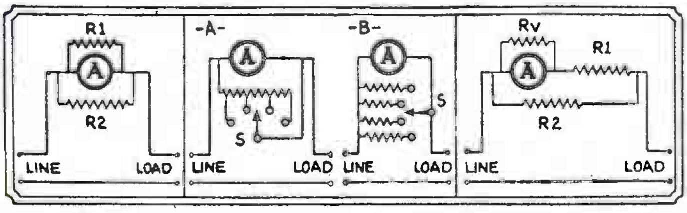

Fig. 5 **Fig. 6** **Fig. 7**

Left. The shunt R2 is connected directly across the ammeter. Center. At A and B are shown two methods of connecting several shunts. Right. The resistor R1 is inserted in series with the meter to increase the size of shunt required.

Making R1 500 ohms with a meter resistance of 27 ohms, the total series resistance of this circuit becomes 527 ohms, and as the ratio of increase is 1,000, then $\frac{527}{1,000} = 0.527$-ohm for the value of the shunt. This 0.527-ohm resistor is easier to obtain than one of 0.027-ohm, so for practical applications this method has much to recommend it.

Supposing R1 were increased to a value of 1,000 ohms, then:

$$\frac{1}{.001} = 1{,}000 \text{ (ratio of increase); and}$$

$$R = \frac{1027}{1{,}000} = 1.027 \text{ ohms.}$$

Here, a 1-ohm resistor for R2 and a 1,000-ohm resistor for R1, will work out very well for all general purposes. Surely the Service Man can obtain a 1 and a 1,000-ohm resistor with an accuracy of less than one per cent, whereas it would be impossible to obtain one of 0.027-ohm at all.

Finding the Resistance of Ammeters

Many times there is no knowledge of the internal resistance of a milliammeter, and as it is necessary to know this value before a proper size of resistor can be selected for the shunt, several methods of determination are used.

The simplest way to find the resistance of the meter is by the half-scale deflection method; the connections for such a measurement being shown in Fig. 8.

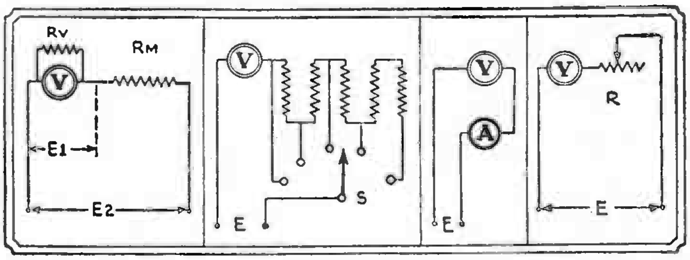

Fig. 1 **Fig. 2** **Fig. 3** **Fig. 4**

Left. The multiplier is connected in series with a voltmeter. Left-center. A means of connecting multipliers for selecting ranges. Right-center. One means for determining the resistance of a voltmeter. Right. "Half-scale deflection" method of determining voltmeter resistance.

R1 is a calibrated resistor and R2 a current-limiting resistor which is used to adjust the current through the meter A to full-scale deflection. With the meter reading at top mark, the switch SW is closed and R1 varied until the meter reads half scale. The resistance of the meter then equals the resistance of R1; and since R1 is calibrated, its value is easily obtained. The currents through the meter A and resistor R1 are equal. Consequently their resistances must be equal.

D.C. Voltmeters from Milliammeters

Experimenters and Service Men are using milliammeters as voltmeters simply by adding a resistor in series with the instrument. Many use the milliammeter because of the simple additions necessary to give a satisfactory movement.

A Jewell Model "8" D.C. 0-1 milliammeter, Fig. 9, has a resistance of 30 ohms.

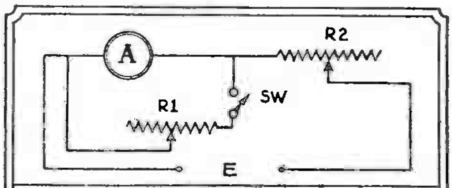

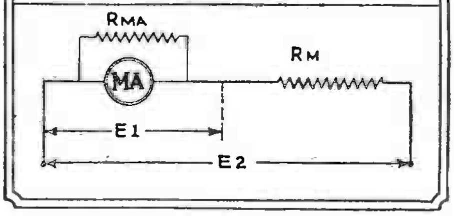

Fig. 8

Above. Determination of ammeter resistance by the "half-scale deflection" method.

Fig. 9

Below. A method of connecting a resistor to make a voltmeter from a milliammeter.

Therefore, a full scale deflection requires a voltage of 0.03-volt (E1). If a voltage range of 500 volts (E2) is desired, the range must be extended 16,666 times, and the necessary resistance value can be found thus:

$$Rm = Rma. \left(\frac{E2}{E1} - 1 \right)$$

$$Rm = 30 \left(\frac{500}{.03} - 1 \right)$$

$$Rm = 30 \times 16{,}666$$

$$Rm = 499{,}980 \text{ ohms.}$$

If the voltages to be measured are high, the meter resistance can be ignored, but if the voltage range is lowered to the point where the measured voltage with the multiplier approaches the normal range of the meter without the multiplier, the percentage of error increases.

The chart shown on page 681 of the May 1931 issue of RADIO-CRAFT has the various values of resistors tabulated for use with various ranges of milliammeters and microammeters for all voltage ranges from 1 to 1,000 volts.

The use of low-current-consumption meters as voltmeters (consuming 1 milliampere for full scale deflection) is convenient, and by ignoring the resistance of the meter, for all practical purposes,

$$\text{R (multiplier)} = \frac{\text{maximum voltage range}}{\text{current through the meter}}$$

Fig. 10 shows a circuit by which voltage ranges of 10, 50, 100, 250 and 500 volts may be obtained with a sensitivity of 1,000 ohms-per-volt.

A.C. Voltmeter Multipliers

The iron-vane types of A.C. instruments may also have their voltage ranges increased in the same manner as the D.C. instruments. The average A.C. meter has a much lower internal resistance as compared to a D.C.

instrument; consequently, care must be used in the selection of the series resistor since its power rating must be taken into consideration. The resistor should have a power rating of at least twice the power consumed in order to insure constant accuracy over extended periods of time.

The formula used to find the value of the series resistor, as shown in Fig. 1, is used for A.C. as well as for D.C. meters.

A.C. meters may be used to measure potential difference both in A.C. and D.C. circuits. When A.C. meters are used in D.C. circuits, polarization of the magnetic parts of the instrument may cause erroneous results; therefore, two readings should be obtained, one with reversed polarity, and the average of these two readings used as the correct value.

Power Rating of Multipliers

In D.C. milliammeters having a range of 0-1 milliampere, the power rating of the series resistor is low. Referring to Fig. 8 where it was found that the value of Rm was 499,980 ohms or approximately 500,000 ohms, it will be instructive to determine the energy dissipated in this multiplier: using the formula

$P = I^2 R$, we find

$P = .000001 \times 500{,}000$

$P = 0.5$-watt.

In this case, a stock resistor rated at one watt would prove satisfactory.

The lower sensitivity of alternating current meters with their lower values of internal resistance places a greater current demand on the series resistor. The Jewell model "78" 0-15 volts A.C. meter has an internal resistance of about 750 ohms and a sensitivity of 50 ohms-per-volt. To multiply this scale so as to indicate 150 volts, the scale reading must be increased 10 times. The value of the multiplier is

$$Rm = 750 \left(\frac{150}{15} - 1 \right)$$

$$Rm = 750 \times 9$$

$$Rm = 6{,}750 \text{ ohms.}$$

Since the total internal resistance of the meter is 750 ohms, and the maximum range is 15 volts, then

$$I = \frac{15}{750} = 0.02\text{-ampere}$$

as the current consumed by the meter.

If the multiplying resistance is 6,750 ohms, and the current consumed for full scale deflection is 0.02-ampere, then the power dissipated

$$P = I^2R$$

$$P = .0004 \times 6750 = 2.7 \text{ watts.}$$

This resistor should have a rating of about 5 watts, especially where the multiplier is used in an enclosed case with poor ventilation. In cases where a resistor is used, whether it be in series or shunt with a meter, care should be taken to keep the power dissipated through the resistor *below its rated value.*

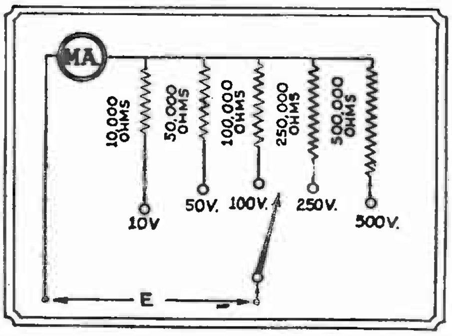

Fig. 10

A voltmeter of the "1,000-ohms-per-volt" type; unit MA is a 0-1 ma. milliammeter.

Condensers as Multipliers

Capacitors as multipliers may only be used in alternating current circuits. The circuit of Fig. 11 shows the multiplying capacity C in series with the meter A; the resistance of the meter is indicated at Rv and the reactance of the condenser Xc. For 60-cycle work, the inductive reactance of the meter may be ignored, the total impedance of the series circuit becoming

$$Z = \sqrt{Rv^2 + Xc^2}$$

Xc being the reactance of the condenser in ohms and is found from the formula

$$Xc = \frac{1{,}000{,}000}{6.28 \times f \times C}$$

One of the best ways to find the value of capacity required is to first obtain the multiplying ratio. For instance, it is desired to increase the range of meter V, Fig. 11, having a voltage scale of 15 volts and a resistance of 750 ohms, to 250 volts; the multiplying factor is

$$\frac{250}{15} = 16.6.$$

Since the resistance of the meter is 750 ohms, and the multiplier ratio is 16.6, then the reactance of the condenser must be 16.6 x 750 or 12,450 ohms.

The capacity of the condenser then is

$$C = \frac{1{,}000{,}000}{6.28 \times f \times Xc} = \frac{1{,}000{,}000}{376.8 \times 12{,}450} = 0.2\text{-mf.}$$

The total circuit impedance may be found from the formula

$$Z = \sqrt{750^2 + 12{,}450^2}$$

$$Z = 12.479 \text{ OHMS}$$

To determine the multiplication ratio as a check for accuracy,

$$\frac{Z}{Rv} = \frac{12{,}479}{750} = 16.6.$$

Thus we find our results check with our original calculations and, providing that the capacity of the condenser is as indicated on the label, satisfactory readings will be obtained as long as the frequency is not changed.

Another version of a universal meter has been developed by the engineers of the Shallcross Mfg. Co., using the circuit shown in Fig. 12. This arrangement results in a meter which can be used both in D.C. and A.C. circuits with voltage ranges of 5, 10, 50, 250, 500 and 1,000 volts; and current ranges of 1, 5, 25, 100 and 500 milliamperes.

All voltage scales have a sensitivity of 1,000 ohms-per-volt, and the current scales operate on a five-volt drop.

A single pair of binding posts is provided, and the various current and voltage ranges are controlled by the switches. The change from A.C. to D.C. measurements is made by the switch A.C.-D.C. The change from current to voltage measurements is made by the switch "MA." or the voltage selector switch "V."

If the switches are not properly set, a cautionary deflection of the needle will be noted, or else the fuse will blow. Otherwise, the safety key may be pressed and the measurement obtained. The danger of destroying a meter by failure to reset switches when changing from one application to another is minimized in this circuit by the cautionary deflection, the fuse, and the safety key.

REFERENCE TABLE

For the convenience of Service Men, the following information concerning the resistors associated with various types of commercial meters is given.

The first value given is the range for a particular type of meter; the second is the value of the internal, or external (indicated by *), associated resistor for the stated range.

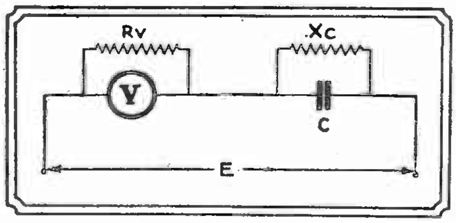

Fig. 11

This illustrates the use of condensers as A.C. meters multipliers. Resistors Rv and Xc are merely symbolic of V and C, respectively.

Jewell Model 88 D.C. Milliammeter

Scale Range, 0-1 ma., resistance value (approx.) 30 ohms; 0-1.5 ma., 30 ohms; 0-2 ma., 25 ohms; 0-3 ma., 20 ohms; 0-5 ma., 12 ohms; 0-10 ma., 7 ohms; 0-15 ma., 5 ohms; 0-25 ma., 3 ohms; 0-50 ma., 1.5 ohms; 0-75 ma., 1 ohm; 0-100 ma., .75-ohm; 0-150 ma., .5-ohm; 0-200 ma., .37-ohm; 0-250 ma., .3-ohm; 0-300 ma., .25-ohm; 0-500 ma., .15-ohm.

Jewell Model 78 A.C. Milliammeter

Scale Range 0-25 ma., resistance value (approx.) 250 ohms; 0-50 ma., 120 ohms; 0-75 ma., 35 ohms; 0-100 ma., 15 ohms; 0-150 ma., 6 ohms; 0-200 ma., 3 ohms; 0-300 ma., 1.5 ohms; 500 ma., .7-ohm.

Jewell Model 78 A.C. Ammeter

Scale Range 0-1 amp., resistance value (approx.) .2-ohm; 0-1.5 amps., .15-ohm; 0-2 amps., .06-ohm; 0-2.5 amps., .05-ohm; 0-3 amps., .022-ohm; 0-5 amps., .007-ohm; 0-10 amps., .004-ohm; 0-15 amps., .002-ohm; 0-20 amps., .001-ohm; 0-30 amps., .001-ohm; 0-40 amps., .001-ohm.

Jewell Model 78 A.C. Voltmeter

Scale Range 0-1.5 volts, resistance value (approx.) 10.5 ohms; 0-3 volts, 21 ohms; 0-5 volts, 50 ohms; 0-10 volts, 160 ohms; 0-15 volts, 750 ohms; 0-20 volts, 1,000 ohms; 0-25 volts, 1,250 ohms; 0-30 volts, 1,500 ohms; 0-50 volts, 4,000 ohms; 0-75 volts, 6,000 ohms; 0-100 volts, 8,000 ohms; 0-150 volts, 15,000 ohms; 0-300 volts, 30,000 ohms; 0-500 volts, 50,000 ohms; 0-750 volts, 75,000 ohms; 0-1,000* volts, 100,000 ohms. (* External resistors.)

Jewell Model 78 A.C. Voltmeter (double range)

Scale Range 0-3 volts, resistance value (approx.) 48 ohms; 0-15 volts, 240 ohms.

Jewell Model 88 D.C. Voltmeter

Scale Range 0-3 volts, resistance value (approx.) 300 ohms; 0-5 volts, 500 ohms; 0-8 volts, 800 ohms; 0-10 volts, 1,000 ohms; 0-15 volts, 1,500 ohms; 0-20 volts, 2,000 ohms; 0-25 volts, 2,500 ohms; 0-30 volts, 3,000 ohms; 0-50 volts, 5,000 ohms; 0-75 volts, 7,500 ohms; 0-100 volts, 10,000 ohms; 0-150 volts, 15,000 ohms; 0-300 volts, 30,000 ohms; 0-500 volts, 50,000 ohms; 0-750 volts, 750,000 ohms; 0-1,000 volts, 100,000 ohms; 0-1,500 volts, 150,000 ohms.

Weston Model 301 Milliammeter

Scale Range 0-1 ma., resistance value (approx.) 27 ohms; 0-1.5 ma., 18 ohms; 0-2 ma., 18 ohms; 0-5 ma., 12 ohms; 0-10 ma., 8.5 ohms; 0-15 ma., 3.2 ohms; 0-20 ma., 1.5 ohms; 0-25 ma., 1.2 ohms; 0-30 ma., 1.2 ohms; 0-50 ma., 2 ohms; 0-100 ma., 1 ohm; 0-150 ma., .66-ohm; 0-200 ma., .5-ohm; 0-300 ma., .33-ohm; 0-500 ma., .2-ohm; 0-800 ma., .12-ohm.

Weston Models 476 and 528 A.C. Milliammeters

Scale Range 0-15 ma., resistance value (approx.) 200 ohms; 0-25 ma., 520 ohms; 0-50 ma., 120 ohms; 0-100 ma., 21 ohms; 0-250 ma., 4 ohms; 0-500 ma., 1.1 ohms.

Weston Model 506 D.C. Milliammeter

Scale Range 0-1.5 ma., resistance value (approx.) 18 ohms; 0-5 ma., 8.5 ohms; 0-10 ma., 3.2 ohms; 0-15 ma., 1.5 ohms; 0-25 ma., 2 ohms; 0-50 ma., 1 ohm; 0-100 ma., .5-ohm; 0-200 ma., .25-ohm; 0-300 ma., .16-ohm; 0-500 ma., .1-ohm.

Weston Models 476 and 517 A.C. Ammeters

Scale Range 0-1 amps., resistance value (approx.) 203-ohm; 0-2 amps., .05-ohm; 0-3 amps., .024-ohm; 0-5 amps., .01-ohm; 0-10 amps., .0058-ohm; 0-20 amps., .00162-ohm; 0-30 amps., .0007-ohm; 0-50 amps., .00057-ohm.

Weston Models 517 and 476 A.C. Voltmeters

Scale Range 0-1.5 volts, resistance value (approx.) 3 ohms; 0-2 volts, 4 ohms; 0-3 volts, 6 ohms; 0-5 volts, 10 ohms; 0-10 volts, 14 ohms; 0-15 volts, 14 ohms; 0-25 volts, 26 ohms; 0-50 volts, 52 ohms; 0-150 volts, 105 ohms; 0-250 volts, 166 ohms; 150/8/4 volts, 67/10/10 ohms (only in Model 476).

The Weston Model 301 D.C. Voltmeter is manufactured with two types of movements, one having a sensitivity of 62 ohms-per-volt, and the second, of 1,000 ohms-per-volt.

The Weston Model 301 D.C. Ammeters operate on a voltage drop of 50 millivolts up to 50 amperes range.

EXTENDING THE RANGE OF YOUR METER

WITH the addition of higher power to radio receivers many of the meters in the older sets are incapable of registering the higher power. Yet these same meters, if of an efficient and reliable make, can be easily adapted to read practically as high a voltage as is necessary. The entire procedure is simply one of adding a resistance of the proper proportions in series with the circuit of a voltmeter or shunting a resistance across the terminals of a milliameter.

All resistors must be of good make and reliable. For voltages under 500 they can be the common receiving type so long as their reading is within a reasonable degree of being correct.

Suppose, for instance, you wish to extend the reading of a voltmeter reading from 0 to 100 to read up to 500 volts. That is, you wish to make the future scale five times that of the former. First you must determine the internal resistance of the meter. This can easily be found from the catalogue of the maker, or by measuring the resistance with suitable instruments. When the ohms per volts is once determined the rest is simple. Calculate the complete resistance by multiplying the complete scale reading by ohms per volt. Suppose, for example, the resistance per volt is 100. Then for the 100 volts the total resistance will be 10,000 ohms. This represents one-fifth of the total resistance necessary. Four times 10,000 ohms will then be 40,000 ohms, the necessary additional resistance to increase the reading to 500 volts, full scale.

Connect this resistor to one of the meter terminals in series with the battery circuit. With the battery at full voltage the meter hand should go over to 100 which will actually mean 500 volts. Step the battery down 100 volts at a time and note the position of the hand, marking it on the scale at each 100 volts.

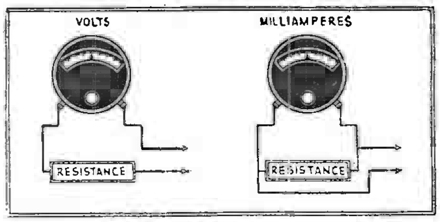

The deflection of the meter, multiplied by five, gives the correct reading.

By using a variable resistance a meter can be prepared to read full scale from any voltage source by making various measurements, using the variable resistance at different settings.

AN ECONOMICAL LAYOUT

BEING one of the many Service Men whose financial standing does not allow me to invest a great deal of money in the purchase of an assortment of high-class meters, I hit upon a little scheme of employing one milliammeter to do the work of several. It serves me as a multi-range high-resistance voltmeter, a three-range milliammeter, an ohmmeter, and a continuity tester. The simplicity of the arrangement, shown in Fig. 6, speaks for itself.

The meter used was a Weston "Model 301," 0-1-ma. scale; this has a resistance of 27 ohms. The resistor connections shown are tip-jacks. The 4½-volt "C" battery needed for resistance measurements is also contained in the same case, with tip-jacks leading through the panel. The 4,500-ohm resistor, leading to the positive side of the meter, is used in series with the test points, for continuity and resistance tests; giving full-scale reading, it will be seen, with an external short-circuit.

To make the 0.27-ohm resistor for the 100-ma. shunt, an 0.4-ohm resistor was taken and turns were shorted out until the right value was obtained. With a meter of any other type, the necessary shunts may be easily figured. Multiply the resistance of the meter by the current which it draws at full-scale reading; then divide this product by the total current, which it is desired to read at full scale, *less the current now taken by the meter.* The result is the value in ohms of the desired shunt. It makes no difference, in this calculation, whether the current is reduced from milliamperes to amperes or not.

It is interesting to note how versatile a simple meter is. By using the proper shunts there is theoretically no limit to the amounts of currents that can be measured.

Fig. 6

The author's layout for his meters is simpler and cheaper to build than the push-button and rotary-switch type. The scales are selected through tip jacks. Resistors of reasonable accuracy may now be purchased at comparatively low rates. For the Service Man who cannot afford a finished "portable laboratory," this outfit will be very useful.

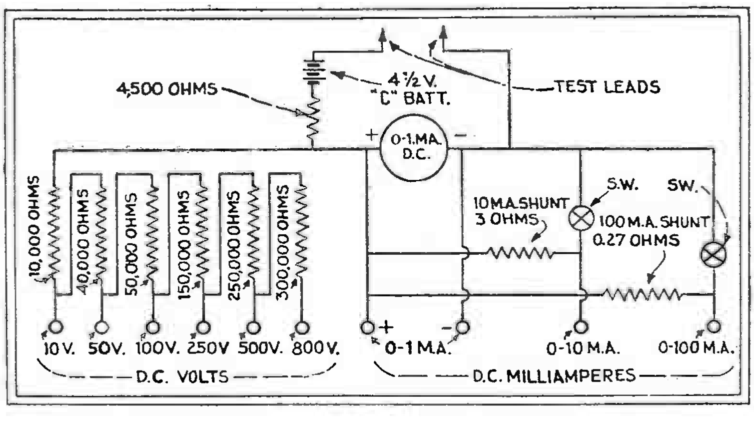

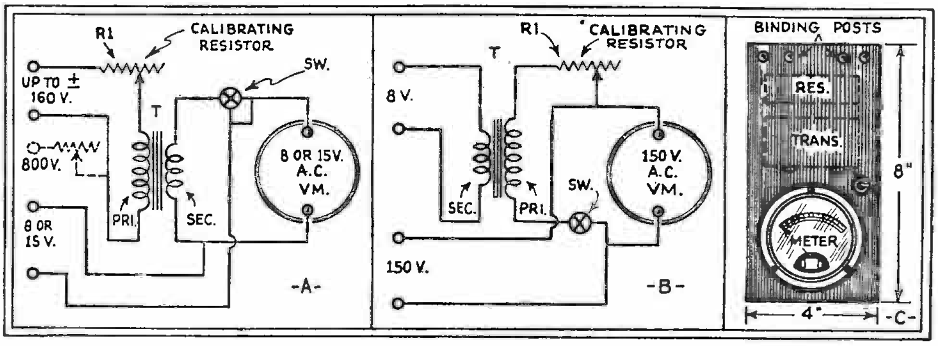

Fig. 1

At A, connections for using a low-range meter for measuring high voltages.
At B, connections for using a high-range meter for measuring low voltages.
At C, a suggested panel layout that is both simple and compact.

The unique method illustrated and described here increases the range of A. C. meter without the use of resistors.

RE-RANGING METERS

ONE never seems to have enough meters for experimental or testing work. Either an A.C. milliammeter is needed, or the D.C. voltmeter scale is too coarse for the voltages to be measured. The object of this article is to help increase the usefulness of one's present equipment, or to assist in selecting the least number of meters required to give the greatest efficiency.

Very often one has a low range A.C. voltmeter and wishes to use it as an A.C. line voltmeter. The first thought is to put a resistance in series and increase the range to the desired value. In D.C. meters this is possible, but with low reading A.C. voltmeters, the series resistance method is not practical, and other means must be employed. Again, the meter on hand may be a 150 A.C. voltmeter and it is desired to measure A.C. filament voltages. We will show how either of the above meters may be utilized by employing a *small bell-ringing transformer.*

The transformer selected was, because of its small size and low cost, a 50-140 cycle General Electric, Type G.E. 2332. The voltage ratio is 110 to 8 volts, a ratio of 13.75 to 1. Thus, by connecting the transformer primary across the line and an 8- to 15-volt A.C. voltmeter to the 8-volt secondary terminals, we may determine the line voltage by taking the readings on the voltmeter and multiplying by 13.75.

Likewise if one possesses a 150-volt A.C. voltmeter and wishes to measure the filament voltage of a radio tube, connect the voltmeter to the transformer *primary,* and the filament terminals of the tube to the 8-volt secondary. But, in this instance, be sure to *divide* the voltmeter reading by 13.75, since we are using the transformer to step-up the voltage. It was found by experiment that *the ratio is not the same as when used for voltage step-down;* (the primary leads on this particular transformer are the stranded wires, whereas the secondary posts are the thumb nuts) consequently we must divide by 13 to obtain correct readings, due to the resistance of the primary.

Of course, the above method does not permit direct-reading (due to the odd ratio of the transformer windings). To accomplish this, the major part of this article will be devoted to means of making the meters read so that factors of 10 or 20 may be used to make easy the processes of multiplication or division.

Meter-Transformer Kit

To make a test meter for measuring filament and line voltages, one needs an 8-volt A.C. voltmeter (either Jewell Pattern 78 or Weston Model 476 will be satisfactory), and a General Electric, Type G.E. 2332 bell-ringing transformer; for housing them, a suitable wooden box, fitted with four insulated binding posts and a toggle switch should be used. A 3500-ohm adjustable resistance, R1 in Fig. 1A, is also necessary and should be mounted inside the box with the other equipment.

The adjustable resistor R1 in this circuit is connected in the primary leg, purposely, since it does not carry as much current in the primary as it would in the secondary, thus reducing the danger of overheating; in Fig. 1B the resistance is connected between the transformer T and the meter VM.

The box mentioned should be no less than 8 x 4 x 2½ ins., which allows for wood up to ⅜-in. in thickness, (although thinner material, making it lighter, would do much better). The sides and bottom may be held together with brads, and the top fastened by four oval-head wood screws. The meter, transformer, and all other parts should be mounted on the inner side of the top (preferably of bakelite) so that, by using the wood screws, this unit can be detached from the box for inspection. (If the stock used for this box is thin, it is best that a wooden block be glued or nailed at each corner to act as a "hold" for the screws.)

The best layout for the parts is shown in Fig. 1C; an arrangement which brings the meter close to the worker and also places the binding posts at the opposite ends. A hole must be drilled in the top of the box, the same diameter as the meter selected; and three additional holes (to coincide with those in the flange) for the small bolts that hold it to the panel. Drill the other holes for binding posts, switch, and if necessary, for mounting the transformer and resistance.

Note that the switch is placed in the meter circuit in order that the meter may be used by itself; otherwise, the current drawn from the circuit to be measured would be higher than necessary, since current would flow through the secondary of the transformer as well as to the meter. (See Fig. 1A.)

Calibration

After all the parts are mounted on the box cover and connections are made according to diagram, the combination must be calibrated. To obtain best results, a 150-volt A.C. voltmeter should be used to read the correct value of the test potential. This instrument must be connected directly across the line to which are connected the two high-voltage binding posts. In this way, we know the value of the voltage applied at the binding posts of our instrument to be calibrated. With this set-up, the 8-volt meter must be made to read one-twentieth of the 150 voltmeter indication by varying the value of adjustable resistor R1. Supposing, for instance, that the latter reads 114 volts, we divide 114 by 20 and have 5.7 as the voltage. Then we vary the value of R1 until the 8-volt meter reads 5.7 volts and fasten the sliding contact so that it cannot change—our outfit is now calibrated.

To some, it may not be possible to borrow, or have access to the 150-volt standard meter mentioned in the preceding paragraph, in which case it will be necessary to resort to another method, (although it is not as accurate as the one just described).

After all parts are mounted, connect a temporary switch across the adjustable resistance so that it may be shorted-out at will. Now, with the switch closed, connect the high-voltage binding posts leading to the transformer primary to a source of 60-cycle A.C. If the voltage on the secondary meter reads the 7.5 volts which we have been using for our example, we can *calculate* the line potential by multiplying 7.5 by 13.75 (the transformer ratio) giving 103 volts as the line potential. Wishing to make our multiplier 20, we must divide 103 by 20, obtaining 5.2, the value in volts which the meter should read at that line potential. Finally, open the short-circuiting switch and vary the value of resistance R1 until the meter reads 5.2. (It might be well to repeat this to check our work in case the line voltage varied during the calibration.)

The same procedure may be used to calibrate a 150 V. scale line-voltage meter, using the transformer to measure the low A.C. calibrating potential. Connect as in Fig. 1B, placing a temporary short-circuiting switch across the variable resistance R1 which here is shown in series with the meter. From the two binding posts connected to the low-voltage winding of the transformer, run a pair of leads to some source of 'low-voltage A.C., such as the filament terminals of a radio tube socket. Turn on the current and read the 150 volt meter *with resistor R1 shorted.* Next, divide this reading by 13.0 and then multiply by 10. Finally, open the short and vary the resistance R1 until the meter reads this computed value. Run a pair of leads to some source of low-voltage A.C., such as the filament terminals of a radio tube socket. Turn on the current and read the 150 volt meter *with resistor R1 shorted.* Next, divide this reading by 13.0 and then multiply by 10. Finally, open the short and vary the resistance R1 until the meter reads this computed value.

Increasing the Range

After the step-down arrangement in Fig. 1A is calibrated as described (using either method), it may be further calibrated for a still higher value.

Add another binding post and between it and one of the high-voltage posts connect a resistor of about 30,000 to 35,000 ohms. This connection is shown dotted in Fig. 1A. A high-voltage meter will be temporarily required as a standard.

With the combination connected to some high-voltage source, such as the unrectified A.C. from a power pack, and the standard meter connected into the circuit, vary this new resistance (R2) until the 8-volt meter reads one one-hundredth of that of the standard. For example, if the standard reads 320, the other should be made to read 3.2 volts by varying the value of resistor R2. On account of the high voltage, *use extreme caution in this test;* shut off the main supply when varying the value of resistor R2, which should be capable of dissipating about 10 to 12 watts. (It will be necessary to increase the length of the box to accomodate this extra resistance. Do not try to stuff it into the 8-inch box, as this will result in poor insulation and radiation.) With the above calibration the 8-volt meter will read 800 volts.

Every Milliammeter a Direct-Reading Ohmmeter

ANYONE who works with radio circuits is, sooner or later, interested in a direct-reading ohmmeter for the purpose of measuring unknown resistance values and also testing the continuity of circuits. If the price is available, a suitable instrument can be purchased for this purpose. However, the experimenter or Service Man can readily convert the usual 0-1 milliammeter into a combination milliammeter and direct-reading ohmmeter, making use of the scale herewith reproduced.

To bring about the desired conversion of the milliammeter, the first step is to remove the meter from its case by loosening the three mounting screws. Remove the two screws holding the milliammeter scale in position. Place ohmmeter scale on top of old scale, fastening with a few spots of glue if desired, and replace the scale mounting screws. Connect meter, battery and calibrating resistance in series. The meter should now read zero on ohmmeter scale; if not adjust pointer with zero set screw. Replace meter in case.

The battery voltage and calibrating resistor determine the meter reading and, therefore, the accuracy of the ohmmeter. When a 1.5-volt battery or single dry cell is employed, in combination with a 1,500-ohm calibrating resistor, the scale is direct reading. If a 4-5-volt battery made up of three dry cells is employed, in combination with a 4,500-ohm calibrating resistor, the scale reading must be multiplied by three. With 22.5 volts as provided by the usual fresh "B" battery, together with a 22,500-ohm resistance, the scale reading is multiplied by fifteen.

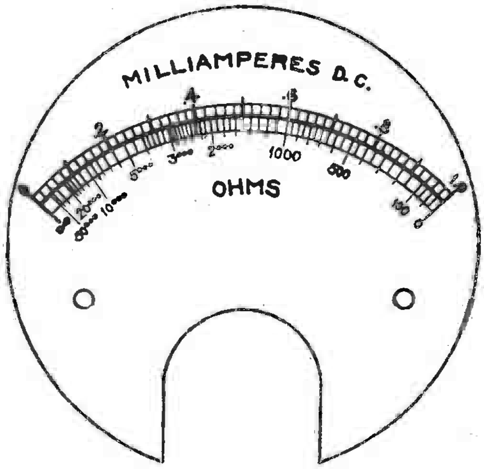

The scale reproduced corresponds to those of the Weston "301" and Jewell "88" milliammeters (which differ in the positions of the screwholes). Corresponding resistance readings may be entered on any milliampere scale.

By employing a 22½-volt tapped "B" battery, providing a choice of 1½, 4½ and 22½ volts, together with three resistors of 1,500, 4,500 and 22,500 ohms, the ohmmeter may be employed to cover any resistance readings from 0 to 750,000 ohms. Meanwhile the former milliammeter function of the meter is by no means impaired, since a double-reading scale is now available.

The direct-reading ohmmeter described presupposes the use of precision wire-wound resistors of an accuracy within 1% of their rated resistance value; ordinary resistors will not do. Our recent development of precision wire-wound resistors (incorporating such unique features as a special ceramic form with successive sections to hold the winding; the highest grade of enamelled resistance wire; special impregnating compound which hardens with high temperatures instead of softening; the moulded end contacts; and the unique method of balancing the winding to the exact resistance value) now makes the usual milliammeter and voltmeter available for a greater variety of uses, without sacrificing the expected accuracy. Unless precision resistors are employed, the conversion of milliammeter and voltmeter instruments for a multiplicity of purposes is a sheer waste of time.

A Handy Tester

IN radio servicing over a period of ten years I have used all the usual devices in continuity testing—phone and battery, flashlight bulb and battery, and small neon bulb with 110 volts D.C., and so on—but the one which tells the story in no uncertain terms is a 0-1 milliammeter calibrated as an ohmmeter and used in series with a 1½- or 3-volt "C" battery and two probes.

I made up a neat little outfit which is easily carried in one's pocket. My battery is made up of fountain-pen type flashlight cells which, placed end to end, slip in the coat or vest pocket out of the way when testing. The probes are made from two ten-cent propel-style lead pencils with composition barrels and brass tips through which the steel plunger protrudes. I ground the ends of the plungers to a chisel edge, better to cut through any deposit on the conductor being probed and give a maximum of contact surface. I soldered the bared end of a length of fixture cord in the eraser end of the pencil and slipped a cap-type rubber eraser over the wire and the end of the probe; thus insulating all but the tip.

The meter is provided with two flat loops of brass wire, one soldered on each side so that a strap or piece of elastic may be sewed to them, like straps on a wrist watch. The meter is handily slipped over the fingers and held in place on the back of the hand by the strap across the palm.

With a probe in each hand the readings are easily taken without turning away and gazing at a meter in some unhandy place and, often, allowing the probe to slip from a difficult position. The speed gained by using this arrangement more than pays for the trouble of making it.

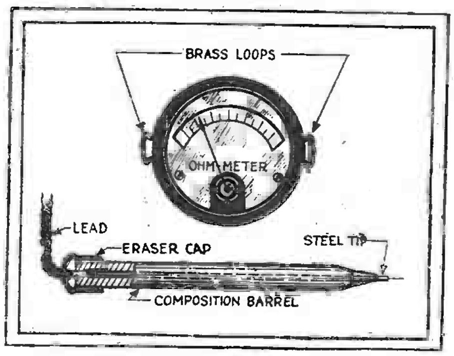

Fig. 1

CHAPTER VI

Vacuum Tubes

The Vacuum Tube is the Most Important Part of Radio. He Who Understands It Knows Radio. All Service Men Should Study This Chapter Thoroughly.

Vacuum Tubes for Radio Reception

A GREAT deal of interesting information (and some misinformation) on the vacuum tube has been printed in books and periodicals. But, of all the data, very little is useful to the professional man and the more advanced fan. Practically all the information is limited to the listener who is interested merely in replacing the tubes in his receiver.

It is the purpose of this article to bring out some of the points which have been neglected, or purposely left out of the previous articles; as well as to supply a definite source of information for the characteristics of the standard tubes. It might be well to begin by explaining that, although there are more than 150 manufacturers of receiving tubes, the actual number of types of tubes is comparatively small. By this we do not mean to imply that the tubes of all manufacturers have the same characteristics; but the purposes for which the similar tubes were made are sufficiently distinct to allow a classification in this way. We will give the characteristics of the most standard and best-known of these tubes.

Looking back on the beginning of broadcasting, we find the difference in the tube situation is very striking. At that time, the fan who had been using a crystal for reception would at some time get a great desire to own one of the remarkable vacuum tubes that he had been hearing about. After deliberating for some time, and probably saving his spending money for a number of weeks, the fan would shyly enter the best-known and perhaps the only radio store in his locality and timidly ask the clerk for a "tube". This he would receive with no further question, either in a rough box or with no protection at all. Now, when a prospective buyer goes into the nearest store for a tube, he must give a very close description of its purpose and use and he has the choice of a number of different makes at different prices.

Factors Which Control Tube Life

To answer the question, "What is a 'good' tube?" we must consider the situation from several standpoints. First, there is the mechanical construction, which is entirely a matter of the design and manufacture. Next there is the choice of materials; and the quality of materials, which are also matters concerning the manufacturer.

However, these are not the only points to be considered. It has been estimated that about 30% of the A.C. tubes which break down prematurely, do so because the tubes are placed in the wrong sockets of the set; as in the case of the '26 tube being placed in a power-tube socket. Another point concerning the *user,* is the continued use of excessive filament and plate voltages, which results in the shortening of the life of the tube.

There was a time in the history of tube fabrication when manufacturers deplored the long life of their products. Now, however, in these days of high competition, each tube maker must use the very best material and employ every precaution to make his tubes last as long as those of his competitors; for otherwise his products would get a bad name with resulting loss in sales.

The Tube Laboratory

Practically every tube manufacturer maintains a laboratory in which materials are tested, and samples of the manufactured tubes are subjected to various tests. This laboratory must be equipped with both electrical and chemical research and testing units; since it is necessary to test the composition of the materials; such as the nickel and molybdenum, employed in the construction of the grid and plate elements, and also the insulating materials such as the glass and the ceramic tubes which separate the filament from the *cathode* in the heater types of tubes.

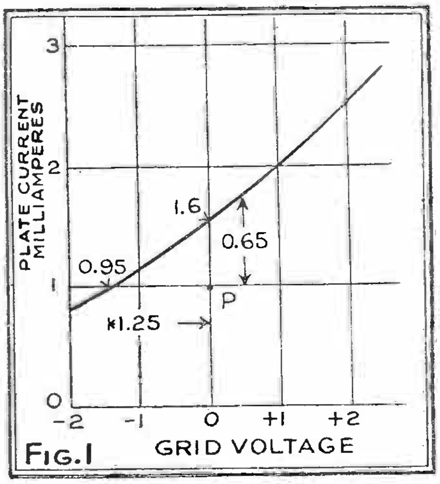

FIG. 1

A single graph indicating a variation in plate current with grid voltage change.

It may be safely said that *standard tubes are made with every known precaution for long life and efficient service;* and although there is still room for improvement in the design, the tubes are remarkably consistent. A glance at the records of tube failure, maintained by a number of the larger manufacturers, shows a remarkably low percentage of tube returns. For example, the returns of the De Forest Radio Company, for a period of six months, were less than 1%; and many of the replaced tubes were proven to be injured through misuse and not through manufacturing failure.

From the above, it will be noted that the point of *correct use* has been emphasized; therefore, below are additional data on the correct use and care of tubes. This information will be of service to the dealer and professional man as much as the consumer.

The Filament

Vacuum tubes, properly used, are far from extravagant. Any reliable make of vacuum tube with a genuine *thoriated tungsten or oxide-coated* filament, OPERATED AT THE PROPER FILAMENT VOLTAGE, has a life far in excess of a thousand hours; and it is not uncommon to see tubes going strong after several thousand hours of daily service. Furthermore, *reactivation* of thoriated filaments is entirely unnecessary in obtaining this long life. Reactivation of a filament is a confession of abuse, either through sheer carelessness or pure ignorance of the meaning of correct use.

The filament of a vacuum tube is, of course, the very heart of reception. It gives rise to the circulation of *electrons,* on which is dependent the entire operation of the apparatus. The robust filament gives off a healthy flow of electrons even at moderate temperatures; while a sickly filament requires an excessive operating temperature to raise the "emission" to the same degree, and this soon brings the useful life of the tube to an end.

Not so long ago, vacuum tubes made use of *solid tungsten* filaments, similar to those used as electric lights. These had to be heated to a bright *incandescence* in order to provide sufficient electronic emission; making multi-tube sets very expensive to operate. (The filament consumed four times the current of our present '01A type tubes.) Today, however, special filaments are employed, capable of copious electronic emission at relatively low temperatures (and therefore with a minimum current drain). The A.C. tube, which must have a higher amperage flow for correct operation, consumes little *wattage*, because of the very low voltages used.

The study of the action in a thoriated-tungsten filament is remarkably interesting.

Inside the Filament

When the tungsten mass is heated to the required temperature, the embedded thorium particles are diffused to the surface which they cover with a layer of thinness measured in atoms. The clusters of electrons (given off by the thorium) are then virtually plucked off by the attraction of the (positive) plate; but other electrons immediately take their place on the surface. There is a critical temperature (an "optimum" value) at which the filament operates with the greatest efficiency; and at this the thorium particles are diffused to the surface just fast enough to keep the latter properly covered.

If the temperature is too low, there is not a sufficient flow of electrons; and if the temperature is too high, the thorium is thrown off—"evaporates"—from the filament faster than it can diffuse to the surface. The first condition results in low efficiency, while the second causes a "de-activation" of the filament, ending in a marked decrease in current flow from filament to plate. There is still another effect from the second condition; the filament's crystalline structure, which has received very careful attention (in the process of drawing the wire into the hair-like filament) is altered, greatly reducing the life of the tube.

In the case of the heater type of tube, the excessive heat soon burns the active coat from the cathode, and also shortens the life of the tube; while the filament which heats the cathode cylinder is subject to the same changes as the other types of filaments.

Thus it is seen that filament temperature is one of the most important factors in tube life. There are several other considerations which are also very important, although they are not as obvious as those associated directly with the filament. One of these is the grid voltage.

"C" Bias and Tube Life

In a power tube, such as the '71A or the new '45, if the grid-bias resistor is short-circuited or the "C" battery removed from the circuit, the *plate current* increases enormously; and in some cases the extra heat produced by this increase is sufficient to permanently injure the tube in a comparatively short time. (The normal plate current for the '45 tube with 250 volts on the plate and 50 volts on the grid is 32 milliamperes. If the grid bias is removed, the plate current jumps immediately to about 60 milliamperes!)

There is another effect of incorrect "C" bias. The modern set usually draws all of its plate current from a single rectifier tube (usually one of the '80-type) and, as these tubes are often operated at very nearly their maximum current, the increase of the current flow in the power-tube circuit often causes failure of the *rectifier*.

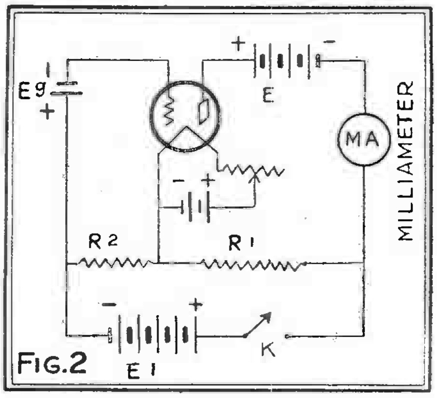

FIG.2

Schematic circuit of the units used to obtain the most important "tube characteristic" readings. From these figures the "amplification factor" may be determined

In order to facilitate the explanation, we will give a list of the most important points in getting the most from your tubes. (These points were listed in a book published by the Sonatron Tube Co., "HOW TO TAKE CARE OF YOUR RADIO TUBES.")

(1). Keep the prongs of the tubes clean in order to assure good contact. The prongs of the sockets should also be cleaned.

(2). Use the correct filament voltage at all times; it is a good plan to run the tubes at about three-quarters of their rated voltage, if the quality is not greatly affected in this way.

(3). The correct "C" bias (for the "B" potential applied) must *always* be supplied to *every* tube; incorrect "C" voltages will cause distortion. (And other forms of mal-performance. See above.—*Author*).

(4). The correct "B" voltages must be applied; if lower voltages are used, you will not get the correct volume or quality. If a "B" power unit is used, be sure that it is capable of delivering sufficient voltage to the plates of the tubes. If variable voltage controls are provided, it is a good plan to check the output of the unit with a *high-resistance* voltmeter.

(5). Always use the tubes for the purpose specified by the manufacturer. The use of tubes for purposes other than those for which they are designed will often result in short life and poor results. Also be sure that you place the tube in the correct socket in the set; a great number of "blow-outs" are caused by failure to do so.

(6). Never attempt to use a "hi-mu" tube in a transformer-coupled *amplifier;* by doing so, you will get distortion. These tubes, however, are often good *detectors* when properly used with audio transformers.

(7). When using dry-cell tubes such as the '99, be sure that you do not use more than 3.3 volts on the filament. *It is advisable to connect a voltmeter across the filament to* show the voltage. These tubes soon become paralyzed if excessive filament voltage is applied.

(8). In using A.C. tubes *make sure* that the transformer supplies the correct voltages. Due to changes in the line-voltage, a transformer will often supply much higher voltages than those required. An accurate *A.C. voltmeter* should be used to check these values.

(9). Follow the manufacturer's instructions for using a tube. The manufacturer has spent considerable time and expense in the design of the tube, but it cannot operate correctly unless the instructions which accompany each tube are followed exactly.

The Characteristics of Tubes

The folders wrapped with each tube advise the purchaser of certain "characteristics" which differentiate the tube from other types. These characteristics are not always understood properly except by engineers; as the terms are not familiar to the fan and, in many cases, they are not entirely understood by the dealer and service man.

The *filament voltage, grid voltage,* and *plate voltage* can be easily understood by everyone who might use a tube. The *amplification factor,* the *plate resistance,* the *mutual conductance,* and *undistorted output* are the more technical characteristics which cause confusion. For the professional man, who is required to test the operation of various tubes, we will show methods of finding these values.

The two main factors that enter into the design of vacuum tubes are the *amplification factor* and the *plate resistance*. The amplification factor (*"mu"*) increases with the distance between the plate and the grid, and depends also on the spacing and size of the grid wires. Although theoretically, *"mu"* is constant, in practice it decreases slightly at low voltages. The amplification factor is defined as *"the ratio of the change* in the plate voltage (necessary to give a change in plate current of a certain value) to the change of grid voltage (which will produce the same change in the plate current)". In other words,

$$\text{"mu"} = \frac{dEp}{dEg}$$

The amplification factor is useful in determining the qualities of a tube as an amplifier and, in common practice, it is the value which is used most frequently for determining the purpose for which a tube can be used. It can be determined from a graph showing the *variation of plate current with grid voltage,* by taking a reading at some value of plate voltage slightly different from the one used in making the curve. (This type of graph is very common and can be obtained from any manufacturer of tubes). The point should be plotted on the graph with reference to the grid voltage-plate current readings used for the original curve. For example, Fig. 1 shows a graph made for a common tube with a plate potential of 45 volts. The point P is the new value when using a plate voltage of 35; hence, the change is 10 volts, the grid remaining at zero voltage in respect to the negative end of the filament. It is seen that the plate current drops from 1.60 to 0.95-milliampere; which is a difference of 0.65-milliampere.

From the above definition, the amplification factor is equal to the change in plate voltage divided by the change in grid voltage. The grid voltage which would produce this same change in the plate current is the horizontal value from the point P to the curve. (In this case 1.25 volts.) Thus, 10 divided by 1.25, or 8.0, would be the "amplification factor" of the tube.

Another way of measuring the amplification factor is shown in Fig. 2. The equipment consists of a 10-ohm resistor r2, a resistor r1, calibrated up to 500 ohms, and a key K. When K is open, the tube is in normal operating condition, r1 being too small to affect the plate current; when the key is closed, the battery E1 (about 10 volts) discharges through r2 and r1. The voltage divides through the two resistors according to their values. The voltage across r2 is applied to the grid in the reverse direction to that impressed on the plate due to the drop across r1 in the plate circuit. The voltage on the grid is amplified by the tube and produces a voltage *"mu"* times as great in the plate circuit. If these opposing voltages do not balance, a small difference in the plate current, shown in the milliammeter, results. By closing K and increasing or decreasing r1 until no change is noted, then r1 is *"mu"* times r2 and the amplification factor is *"mu"*=r1/r2. If r2 is 10 ohms, it is necessary only to divide r1 by 10 to obtain the amplification factor.

Plate Resistance

The term "plate resistance" does not refer to the resistance offered to the flow of *direct current* in the plate circuit, but is the resistance offered to the flow of *alternating* current in such a circuit. The plate resistance may be calculated from the values found for the amplification factor. Plate resistance

$$Rp = \frac{dEp}{dIP}$$

In the example above, the change in the plate voltage was 10 volts, and the change in plate current 0.65 milliamperes or .00065 ampere. The ratio of 10 to .00065 is 15,400, which is the A.C. plate resistance in ohms.

Mutual Conductance

Both the *plate resistance* and the *amplification factor* affect the performance of the tube as an amplifier. In order to have a simple value for comparing the merits of tubes, a term called *mutual conductance* was devised. This expression takes into consideration both the above values. "Mutual conductance" is the *ratio* of the amplification factor to the plate resistance. The usual unit for the mutual conductance is the *micromho*.

We know that

$$\text{"mu"} = \frac{dEp}{dEg} \text{ and that } Rp = \frac{dEp}{dIp}.$$

Hence the ratio of these two units is equal to

$$Gm = \frac{dEp}{dEg} \div \frac{dEp}{dIp} = \frac{dIp}{dEg}$$

In other words, the mutual conductance may be defined as the ratio of a small change in the plate current to the change in the grid voltage required to produce the same change in the plate current.

Tubes having high values of mutual conductance are more efficient amplifiers than those having lower values; but the comparison must be made for tubes designed for the same purpose and having similar characteristics. Thus, a tube such as the '12A has a mutual conductance of 1600 micromhos and the '71A has an average value of 1360 micromhos for the same plate voltage. However the '71A can supply about 160% greater "undistorted output" than the '12A when a louder signal is being received. The tubes are designed for different purposes.

Undistorted Output

This valuation, which is heard frequently in the design of modern sets, is the factor which is used to compare the amount of current which two tubes of different types will carry without introducing noticeable distortion into the signal. In other words, if one tube—such as the '12A—distorts considerably with a certain volume, the use of a larger tube such as the '71A, '45, or '10 will prevent this distortion.

TABLE A

Name of Set	*Model*	*Equipment Package*
Atwater Kent	40; 52; 56; 58	EQ1
" "	45	EQ2
" "	46; 53	EQ3
Brandes	B-10	EQ4
Bosch	28	EQ3
"	29B	Special
Bush and Lane	4A	EQ3
" " "	De Lux	EQ6
Crosley	704; 706; 708	EQ3
"	804; SB	EQ5
Eveready	1; 2; 3	EQ3
Fada	All 1929 models	EQ5
Grebe Synchrophase	AC-6	EQ1
" "	AC-7	EQ2
Kolster	K-20; K-22	EQ1
"	K-21	EQ2
Kennedy	....	EQ6
Lyric	....	Special
La Salle	6-T	EQ1
" "	7-T	EQ3
Lafayette	....	EQ3
Majestic	71-72	EQ3
Philco	511	EQ1
President	T-C	EQ3
Radiola	17-18-33	EQ1
Stewart Warner	801	EQ1
" "	900	EQ6
Steinite	261	EQ1
"	40	EQ5
Stromberg-Carlson	635-636	EQ4
Standardyne	7	EQ2
Victor	7-11—7-26	EQ1
Admiral	....	EQ3
Apex	36	EQ1
Balkite	....	Special
Case	73-B	EQ2
Freshman	M-11	EQ1
Arborphone	45-55	EQ3
Temple	....	EQ6
Zenith	33-X	EQ4

TABLE B

EQ1......	4, '26; 1, '27; 1, '71A; 1, '80
EQ2......	5, '26; 1, '27; 1, '71A; 1, '80
EQ3......	4, '26; 1, '27; 2, '71A; 1, '80
EQ4......	5, '27; 1, '71A; 1, '80
EQ5......	5, '27; 2, '71A; 1, '80
EQ6......	5, '27; 2, '45; 1, '80

The above tables indicate a novel idea for increasing tube sales by reducing sales resistance.

The unit on which the undistorted output is based is the *watt*. Since most tubes will not carry a full watt of power, the unit is reduced and the *milliwatt* or one-thousandth of a watt is employed for rating. In order to obtain the greatest amount of power from a power tube, it is generally accepted that the plate resistance should be equal to the resistance of the reproducer *or* the coupling unit.

The conditions for maximum output are limited by the extent to which the output is considered undistorted. A distortion of 5% is quite imperceptible to the listener and, hence, may be allowed; especially since only a relatively small power increase is obtained with a greater distortion level. By this we mean that the output volume would not be increased, even though the tube were forced further, and the signal would be distorted to a much greater extent.

Under certain conditions, the greatest undistorted output may be obtained with different ratios of the plate resistance to the load resistance; and investigations indicate that a **maximum undistorted** power output is obtained when the LOAD resistance is equal to twice the PLATE resistance. (This conclusion is based on statements made in the "Proceedings of the Institute of Radio Engineers," vol. 36). This condition is realized when the plate and grid resistances are adjusted to their best values and, of course, the statement does not hold true for other voltages. The apparent conflict of the statements made above is due to the difference in the conditions considered as undistorted; in the first case, the tube distortion in the power tube is neglected, and in the latter, the over-all conditions are taken into consideration.

"Static" and "Dynamic" Tests

The method of determining the mutual conductance, the plate resistance and the amplification factor, which were described above, give the "static" values.

There are two methods of obtaining the characteristics of tubes. One is the "static" method mentioned above, and the other the "dynamic" method. Both have their uses; but the professional man will be able to find data on the second method very easily by referring to technical books on the subject. One very good book on the operation of vacuum tubes valuable to the engineer is "The Thermionic Vacuum Tube" by H. J. VanDerBijl.

General-Purpose Tubes

Under this head may be included the tubes of earlier design which operate with either dry batteries or storage batteries for the filament supply. The first type of these tubes is not used very extensively at this time, although it is still being made for replacement purposes; this is the WD-11 and WX-12.

Filament voltage, 1.1; current 0.25-ampere.
Plate voltage, 22½ to 45 as detector; 90 to 135 as amplifier; current 1.5 ma. at 45 volts; 2.5 ma. at 90 volts; 3.5 ma. at 135 volts.
Grid bias, 4½ volts with 90 on the plate; 10½ with 135 on the plate.
Plate resistance, 15,500 ohms at 90 volts; 15,000 at 135.
Amplification factor, 6.6.

As these tubes are used only for replacement purposes, we will not discuss them further.

Next in line we have the '99 type; these tubes have won favor especially in portable sets because they save much weight in construction. Because of the extremely small filament current, ordinary dry cells are suitable for the filament supply and, if only a few tubes are used in the set, the batteries last for some time. Three dry cells, connected in series, are the usual source of filament supply; a two-cell storage battery is occasionally used.

Filament voltage, 3.3; current, .063-ampere.
Plate voltage, 45 as detector, 90 as amplifier. Plate current 1.0 ma. at 45 volts, 2.5 at 90.
Grid bias, 4½ volts with 90 volts on the plate.
Plate resistance, 15,500 ohms.

Amplification factor, 6.6.

The next tube we will consider won favor everywhere as a general-purpose tube and has only been supplanted lately because of the great demand for A.C.-operated tubes. This is the '01A type, the standard, all-around duty, storage-battery tube, which functions well in all circuits whether as oscillator, radio-frequency amplifier, detector or audio-frequency amplifier. More of these tubes have been made than of all others combined.

While the '01A can be used in the last audio-frequency stage, it is not a power tube, for its maximum undistorted output is only 55 milliwatts. Various manufacturers have different type numbers for this tube: as the Cunningham, CX-301A; CeCo, AX; R. C. A., UX201A; de Forest, 401A; Triad, T-01A; Diatron, 201A; Ray-O-Vac, RX201A; Cable Supply Co., Speed 201A; Raytheon, RayX-201A, etc. Each manufacturer has an individual and distinctive name and model number for the tube, and different methods of mechanical construction are used; but the electrical values are designed to conform to standard circuit requirements.

Filament voltage, 5 volts; current, 0.25-ampere.

Plate voltage, 45 as detector; 90 to 135 as amplifier.

Plate current, 1.5 ma. at 45 volts, 2.5 ma at 90 and 3.0 ma. at 135.

Grid bias, 4½ volts at 90 plate volts; 9 with 135 on the plate.

Plate resistance 11,000 ohms at 90 volts, 10,000 at 135.

Amplification factor, 8.

Undistorted output, 15 milliwatts at 90 volts, 55 at 135.

There is one other general-purpose tube which has been made by a number of tube manufacturers, including the CeCo Mfg. Co., the French Battery Co. (Ray-O-Vac) and several others. This tube is known as the 201B, or similar numerations. The characteristics are very similar to the '01A tube, except that the filament current is 0.125-ampere instead of 0.25-ampere. This reduced filament current allows the tube to be operated in conjunction with the '80 rectifier tube. The tubes are all connected in series, instead of the usual parallel method; so that the current drain will be within the limits of the rectifier. The reduced filament current adapts this tube also for the semi-portable receivers used in automobiles, etc.

One manufacturer, the CeCo Mfg. Co., makes a tube similar to the '01A, but adapted particularly for radio-frequency amplification. The characteristics are the same as those of the '01A, except for the plate resistance; this value is almost double that of the regular tube made by this company. This special tube is known as the "K" type and the regular tube is called the "AX."

Special Battery-Type Tubes

Besides the regular battery tubes listed above, there are several other types which are adapted for specific purposes and are not really suited to other purposes. Among these is the special detector tube known as the 200A or 300A type. Most manufacturers use a symbol similar to the above one for this tube, although there are several deviations from this standard. The CeCo Mfg. Co. call their tube the "H" type; the E. T. Cunningham Co. use the symbol 300A; the Raytheon Mfg. Co. use Ray-X-200A; the French Battery Co. (Ray-O-Vac), use RX200A, etc. The tubes are very similar in their electric characteristics, though.

This tube is designed to be used exclusively as a detector, and is peculiar in the fact that, instead of a high vacuum being used, the tube is filled with a gas. The tube is more sensitive to weak signals than the '01A type, but, in order to obtain the greatest success, several changes must be made in the connections of the detector circuit. The grid return which is ordinarily made to the positive side of the filament (when a grid leak and condenser are used) is changed to the negative side for this tube.

Due to the gas content of this tube, it must be operated with a low plate voltage; it is advised that one of less than 45 be used. Excessive "B" will cause "ionization" of the gas and the resulting effects are many, varied, and all highly undesirable.

Filament voltage, 5 volts; current 0.25-ampere.

Plate voltage, 45; plate current, 1.5-ma.

Plate resistance, 30,000 ohms.

Amplification factor, 20.

This concludes a list of the general-purpose battery tubes; although we have not considered the power tubes, which are suitable for both D. C. and A. C. use, or the screen-grid tubes. These tubes are used very extensively at present, and deserve more space than we could devote to them at this time. However, we will discuss them at length in the next issue. The screen-grid tube in particular deserves much attention, as it is becoming very popular in the newer sets; and, because it requires different circuits from those adapted to the older tubes, it is often misused and misjudged.

Fixed Resistance Values for Two Volt Filament Tubes

Number of CX-330's or CX-332's	Two Dry Cells (3.0V.)		Two Edison Cells (2.8V.)	
	1 CX-331	2 CX-331's	1 CX-331	2 CX-331's
1	4.2 ohms	2.5 ohms	3.2 ohms	1.9 ohms
2	3.2 "	2.1 "	2.4 "	1.6 "
3	2.6 "	1.8 "	1.9 "	1.4 "
4	2.2 "	1.6 "	1.6 "	1.2 "
5	1.9 "	1.4 "	1.4 "	1.1 "
6	1.6 "	1.3 "	1.2 "	1.0 "
7	1.5 "	1.2 "	1.0 "	0.9 "

NOTE: No resistances are needed when using a single cell storage battery

Rheostat Values for Two Volt Filament Tubes—(Minimum)

Number of CX-330's or CX-332's	Two Dry Cells (3.0V.)		Two Edison Cells (2.8V.)	
	1 CX-331	2 CX-331's	1 CX-331	2 CX-331's
1	6 ohms	5 ohms	5 ohms	3 ohms
2	5 "	3 "	4 "	2.5 "
3	4 "	3 "	3 "	2 "
4	3 "	2 "	2.5 "	1.8 "
5	3 "	2 "	2 "	1.5 "
6	2.5 "	2 "	1.8 "	1.5 "
7	2 "	1.5 "	1.5 "	1.3 "

In these columns we have included a table of the characteristics of the radio receiving tubes which have received special reference in this chapter.

The author observes an interesting sales idea contained in the data sheet of the Champion Tube Works.

The "Standard Equipment Package"

It presents to the set user, a convenient means to obtain exactly the correct number and type of tubes as the first tube purchase, or complete replacements, for any standard radio receiver.

The tables (A and B) indicate the application very clearly. Although not complete, Table A lists some of the best known receivers and the corresponding "EQ" tube assortment (the "Standard Equipment Package") for these receivers. Table B shows just what tubes are included in each "EQ" kit.

There is another test which is particularly useful in comparing the operation of tubes, when the complete characteristics are not necessary; such as in the case where a number of tubes are to be tested for a customer or where the tubes are received from the jobber. This method of testing involves the measurement of the *gas-content* in the tube, and also of the *leakage-current* between the elements.

A knowledge of the *gas-content* of a tube provides a good indication of the probable life and the permanency of its characteristics. While the actual characteristics of the tube depend upon the positions of the elements and their size, as mentioned last month, a common cause of short life is an excessive amount of air or other gas in the envelope of the tube.

Operation of the Tester

Fig. 1 is the diagram of the test apparatus: this consists of a plate voltmeter, a filament voltmeter, a grid voltmeter, a plate-current meter and (last but not least) a microammeter. The plate, grid, and filament voltmeters and the plate milliammeter are used for the purpose of checking the currents supplied to the various elements, and a single voltmeter may be used for all three voltage tests. The voltages should be adjusted to the normal values as specified by the manufacturer. The tube is then operated for about five minutes with normal currents on the elements. The potentiometer across the grid battery will allow the current flowing in the plate circuit (indicated in the plate milliammeter) to be adjusted to normal. This value is more important than the plate voltage, in this case; but both should be adjusted as closely as possible. The potentiometer should have a value of 400 ohms or more, so that the current drawn from the "C" battery is not excessive.

After the tube has been operating for some time, the reading of the microammeter should be noted. Next the tube should be turned off and allowed to cool. Then the reading of the microammeter should be taken with the plate battery connected, but the filament turned off. This reading is the *leakage-current* between the plate and grid.

Filament voltage should be applied again and the needle of the microammeter should be watched carefully. In its first swing, the

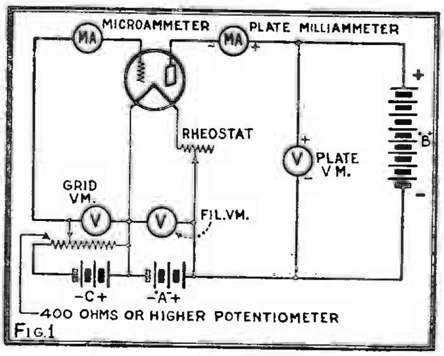

FIG.1

The schematic circuit of a tube tester which will indicate the quality and probable life of tubes of a given type.

inertia of the moving parts will carry it beyond a certain point; to which it will drop back momentarily, before it begins to climb again. The reading at this pause should be taken. The reading of the leakage current should be subtracted from this value and the resultant is the true *"gas reading"* of the tube under normal operating conditions. After a few tubes have been tested in this way, a chart of good values for a certain type of tube can be made.

Problems of Tube Construction

Although modern methods of tube manufacture reduce the gas-content to a very small degree (later, when we describe the methods of making vacuum tubes, we will give more information about the actual degree of vacuum attained, and the values used to compare different gas pressures) it is not possible to remove *all* the gas. In a rarefied gas some of the electrons are parts of atoms and some are "free," or not connected with any atom. The free electrons move with such velocity that, if one hits an atom, another electron may be knocked off. This action of an electron on an atom is known as *ionization by collision.* These stray electrons are influenced by the plate voltage; since all electrons are charged negatively, and according to the law of like and unlike charges, are drawn toward a positive charge.

The electrons detached from the gas atoms thus move toward the plate with the other electrons which are sent out by the filament. The remainders of the gas atoms, from which the electrons have been removed, being positively charged thereby, move toward the filament. Thus, both parts of the atom cause an increase in the flow of current through the gas.

The difference between the actions of two tubes, one with a high vacuum and the other with some gas, is shown in the graph of Fig. 2. The increase in the flow of current in the gassy tube is indicated at Y. It may be considered that the ionization of the gas tends *to neutralize the space-charge in the tube,* and thus a larger current is permitted to pass.

Offhand, one might think that there would be an advantage gained from ionization, because the plate current is increased; but, unfortunately, under this condition the filament deteriorates very rapidly. The reason is that the positively-charged ions are attracted forcibly to the negatively-charged filament, and (since they are much heavier than electrons) their impact breaks down the filament surface. Also, if a high plate voltage is applied to the tube, a "blue-glow" discharge may result. In this condition, the tube is very erratic, and is less sensitive than normal; because the plate current is so high that it is not affected by variations of the grid potential. The increased plate current heats the elements excessively, and results in a total breakdown of the tube structure within a short time.

Certain gases, such as caesium vapor, are purposely introduced into tubes designed for detection purposes, as in the case of the 200A; but here the gas is used for a somewhat different purpose and, since very low plate potentials are employed, the effects mentioned above are not encountered. The gas-filled special detector tube is more sensitive to slight changes in the grid voltage, with the correct plate voltage, and this makes it more efficient as a detector.

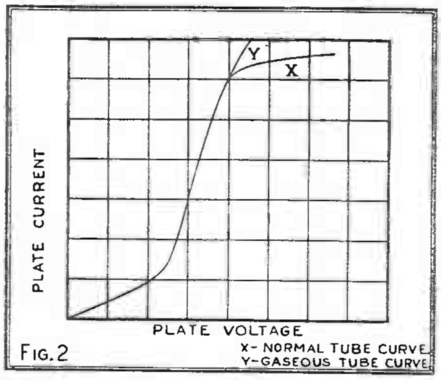

FIG. 2

The presence of too much gas in a tube increases the plate current, as at Y, and will shorten the effective life.

Before describing the various special-duty tubes, it might be well to dispel some of the common misunderstandings about the popular screen-grid tube.

The Meaning of Tube "Amplification"

The screen-grid tube has attracted more interest from both manufacturers and amateurs, during the past few months, than any other development. Contrary to common belief, the screen-grid tube is not a new invention. In a recent engineering bulletin the Fada Radio Corp. reveals the fact that the first screen-grid tube was developed in Germany over ten years ago. This type of tube is being used increasingly at present in both receivers and transmitters.

A very common misconception about this tube is in the amount of amplification that is obtained. Although the *amplification factor* of the tube is between 200 and 400, the actual amplification obtained is considerably lower. This is shown by applying several well known mathematical formulas; that for the *impedance* of a "parallel-tuned circuit" at *resonance* is

$$R=\frac{L^2x\ (6.283\ x\ F)^2}{r}$$

where L is the inductance in henries; F, the frequency in cycles; and r the "radio-frequency resistance" of the coil. Applying this equation to a common case, consider a coil of 240 microhenries, a coil resistance of 10 ohms and a frequency of 545 kilocycles. The formula then becomes

$$R=\frac{.00024^2\ x\ (6.283\ x\ 545{,}000)^2}{10}$$

or R=67,500 ohms, approximately.

The amplification obtained from the tube is equal to the *effective resistance* times the *mutual conductance.* (More will be said about this valuation later). The mutual conductance of one of the popular screen grid tubes is 560 *micromhos;* this is equivalent to .000560 mhos. The result of substituting these values in the above formula is an answer of 37.80; which is the *approximate "gain" for the stage* in which the tube is used.

The "High-Mu" Tube

We have described the characteristics of some of the older types of tubes, many of which are still in general use. At this time, we will continue with the listing of the later designs following a logical sequence in their purpose and popularity.

Another type of special-duty battery tube is the "high-mu" tube, known as the '40 and similar designations; this tube was developed especially for impedance- and resistance-coupled amplifiers. It is found that the tube is also a very good detector, especially when followed by a resistance- or impedance-coupled amplifier. The plate and grid coupling resistors for this tube are somewhat different from those of the 201A tube in a resistance-coupled amplifier. The plate resistor should have a value of 250,000 ohms, and the grid resistor one from 50,000 to 75,000 ohms.

When used as a detector, the grid return should be tried on both the positive and negative terminals; although the best results are usually obtained with the negative connection.

Filament voltage, 5; filament current, 0.25-ampere.

Plate voltage, 135 to 180; plate current, 0.2-ma. as an amplifier, 0.3- to 0.5-ma. as a detector.

Grid bias, 3 volts at 135 volts; 4½ at 180.

Plate resistance, 150,000 ohms.

Amplification factor, 30.

Screen-Grid Tubes

As will be explained, the screen-grid tube is designed to have an extremely small capacity between the input or "control" grid and the plate and, because of this characteristic, the elements may be so constructed and placed that an extremely high amplification-factor is obtained. The reduction in the grid-plate capacity is obtained as follows:

In an ordinary tube, such as the 201A, the electrons emitted by the filament are not all absorbed by the plate, even though the correct filament and plate potentials are used. As a matter of fact, some electrons are held up in the space between the two electrodes. In the screen-grid tube, an extra grid is placed between the regular control-grid and the plate. This extra grid is then connected to a source of direct current at a sufficient potential to take up the electrons which would otherwise be suspended between the grid and plate.

Besides the effect of carrying away the cloud of electrons, the screen-grid has another purpose, which is explained in Fig. 7. The capacity between the grid and the plate of the

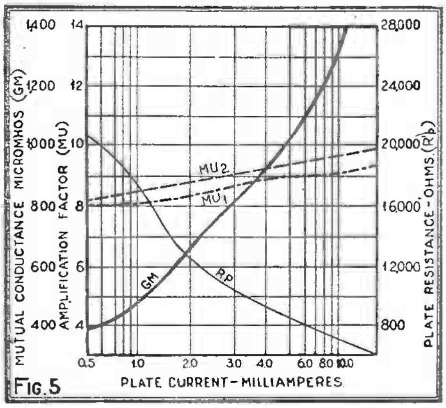

FIG. 5

The characteristics of a '27-type tube, calculated as described last month. The amplification factor Mu varies with the grid bias.

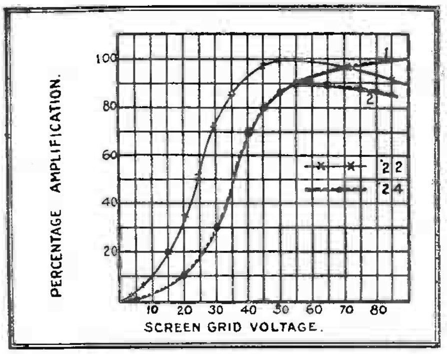

Fig. 3. A graph showing exactly what happens when the screen-grid voltage is varied in D.C. and A.C. Screen-grid tubes.

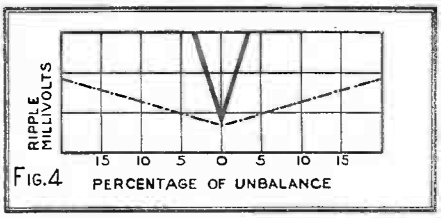

FIG.4

The unbalanced current in which there is an A.C. component causes less hum in a '27 tube, as shown in the heavy line, compared with a '26, shown in the dotted.

ordinary three-electrode tube is shown at A in dotted lines as a condenser between the elements. In the screen-grid tube shown at (B), it will be seen that there are two capacities instead of one.

It is well known that the capacity of two condensers *in series* is less than the actual capacity of either one. Because of this effect, the actual capacity between the elements of the screen-grid tube is considerably reduced below that of the ordinary tube. The virtual capacities are shown at C and D to simplify the diagram. The effective capacity of the '01A tube is in the neighborhood of 9 mmf.; while that of the '22 is 0.1 mmf.

By proper spacing of the tube elements as mentioned before, a very high amplification factor (mu) is obtained. In actual practice, the amplification given by this tube is three to five times that obtained from the '01A type when used on the broadcast band. This variation is due to the plate impedance, which is somewhat limited at the higher frequencies.

When constructing a set to use this tube, several precautions must be followed. It is not necessary to use any neutralizing or stabilizing devices with a screen-grid tube; since the capacity which allowed the set to oscillate is reduced to a very low value. However, in order to prevent a feedback through some other source, such as interstage coupling between the coils and wiring, it is necessary to use extreme precaution in shielding each stage from the others. Because of the high plate resistance, a high impedance must be used in the plate circuit in order to maintain the high amplification. This necessitates the use of special coupling coils with very large primary windings or the employment of tuned-impedance coupling.

The Space-Charge Circuit

The screen-grid tube is also adaptable to audio-frequency amplification; although it was designed as a radio-frequency amplifier. When used as an audio-frequency amplifier, the connections to the grid and screen-grid are reversed.

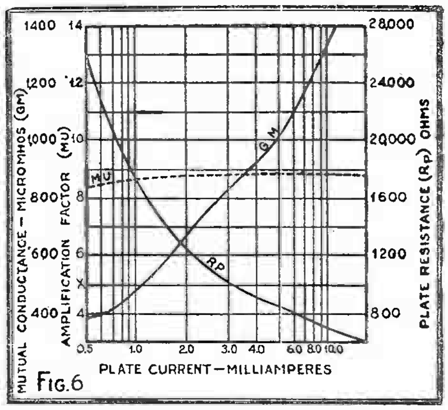

FIG.6

The characteristics of an '01A tube, for comparison with the '27 graph opposite. It will be seen that there is a considerable similarity in these tubes, for general purposes.

The connections for the screen-grid and space-charge tube circuits are shown in Fig. 8. In the circuit at the right the normal control grid (which is at the top of the tube) is connected to a source of positive potential to give the space-charge effect; while the screen-grid instead is used as the control-grid and connected (usually) to an A.F. input. Since the grid-plate capacity of a tube is not very important at audio frequencies, the larger electrode may thus be used as the control grid; this produces a tube with a high amplification factor, which also has a fairly large current-carrying capacity. The smaller grid at the top of the tube (the ordinary control-grid) serves to stabilize the action of the tube; allowing the high amplification factor to be more fully utilized. Its effect is a slight reduction of the number of electrons which reach the plate; this action limits the plate current and, thereby the amplification. Its terminal (the cap at the top of the tube) is connected to a positive potential of about 22 to 45 volts. The use of a variable control of the voltage at this point will regulate the amplification obtained from the tube, and also allow the stability to be controlled; so that the greatest amplification can be obtained with stable action.

When the screen-grid tube is used as a space-charge amplifier, because of the high plate resistance, it is necessary to use a very high value of impedance in the primary coil. The use of resistance coupling between the screen-grid (space-charge) tube and the succeeding tube is advisable in order to fill the above requirements.

The screen-grid tube has a filament designed for 3.3 volts and it draws 0.132 ampere. For this reason, a higher value of filament resistance is required than normal (with the '01A etc.). Usually a tapped resistor of about 15 ohms with a tap at 5 ohms is employed. This resistor is connected in the negative filament lead of the tube, permitting the grid return to be connected to the tap and, in this way, the voltage drop in the resistor is used as the grid bias.

Filament voltage, 3.3 volts; current 0.132-ampere.

Plate voltage, 135 as radio-frequency amplifier. Plate current 1.5 ma. with 1.5 volts grid bias, 1 ma. with 3 volts of grid bias. Plate voltage 180 as space-charge audio amplifier. Current 0.3-milliampere with 1.5 volts grid bias.

Screen-grid voltage, 45 maximum.

Space-charge voltage, 22½ (on inner grid).

Plate resistance, 850,000 to 1,100,000 depending on grid bias. 150,000 ohms as space-charge tube.

Amplification factor 300 (limited by circuit constants). As space-charge audio amplifier, 60.

Alternating-Current Tubes

This concludes the battery tubes with the exception of the semi-power tubes such as the '20 and '12A which will be considered with the other power tubes. Next we come to the A.C. tubes which obtain their filament current from a step-down transformer connected to the electric light line.

The first of these A.C. tubes is one which has a filament very similar to the battery-operated tubes, but uses a very low voltage. This tube is being used less than at first when it was introduced, because of certain advantages in the use of the '27 and the '45 tubes as amplifiers. The '26 tube is not suitable for use as a detector of radio signals because of the loud hum that would be heard. The lines of Fig. 4 show the relative amount of hum-voltage or "ripple-voltage" introduced in the '26 and '27 tubes for a given percentage of "unbalance" in the filament circuit. It will be seen that a 10% unbalance in the '27 produces an entirely negligible increase in the output ripple. With the '26 tube, however, the ripple voltage is increased tremendously.

Filament voltage 1.5 A.C.; current 1.05 amperes.

Plate voltage, 90 to 180; current 3.5 ma. at 90 volts; 7.5 at 180.

Grid bias 6 volts at 90 plate, 13.5 volts at 180 volts.

Plate resistance, 9,400 at 90 volts; 7,000 at 180 volts.

Amplification factor, 8.2.

Undistorted output, 160 milliwatts at 180 volts.

The contrast between the '26 and '27 types in Fig. 4, as to exclusion of A.C. hum, is due to the construction of the two tubes. The '26 tube uses A.C. on the filament, while the '27 uses an indirect method of filament operation. In the latter method, the filament is merely used to heat a small cylinder surrounding it and does not enter into the electrical operation of the tube at all. The small cylinder, or "cathode" as it is known, is coated in such a way that it emits electrons when it is heated to a red heat. In this way it takes the place of the regular filament and also serves as a common connecting point for the plate and grid circuits.

The '27 tube was originally designed as a detector tube, but it was found to be much more satisfactory, in many cases, as an amplifier than the '26 type, and it is fast replacing this tube in modern sets. This is due to the characteristic of the tube, as well as the lower hum-voltage introduced into the circuit by its use. The cathode's emission of electrons is almost entirely unaffected by the change in the filament current.

The graph in Fig. 5 shows the measured

amplification factor (Mu), plate resistance (Rp) and mutual conductance (Gm) for a normal '27 tube of well-known make. It will be seen by referring to Fig. 6, that the characteristics of this tube are very similar to those of the '01A, except for a slightly higher amplification factor in the A.C. tube. The horizontal scale has been taken as the plate current instead of the usual method of using plate voltage. This was done because the plate and grid voltages are apt to vary (with line changes in the case of the A.C. tube) and they are also apt to vary under the load supplied by measuring instruments, even though instruments of high resistance (high resistive-sensitivity) are employed. The use of plate current overcomes these errors. It will be noticed that there are two values of Mu given for the '27. The first of these corresponds to a negative grid bias of 9 volts (Mu 1) and the second to a grid bias of 4½ volts (Mu 2).

The curves made with the '27 tube are the result of measurements made according to the methods already explained for determining the characteristics of tubes. It will be noticed that a logarithmic graph paper was used to plot the curves. This was done to show the values more clearly at low plate currents. An ordinary graph paper could be used, but the results would not be shown as clearly.

Filament voltage, 2.5 volts A.C.; current 1.75 amperes.
Plate voltage, 45 volts as detector, 45 to 180 as amplifier.
Plate current, 3 milliamperes at 45 volts; 3 milliamperes at 90 volts and 6 milliamperes at 180 volts.
Grid bias, 0 at 45 volts; 6 volts at 90 plate volts; 13.5 volts at 180 plate volts.
Plate resistance, 8,500 ohms at 45 volts; 10,000 at 90 volts and 9,000 at 180 volts.
Amplification factor, 9.0.
Undistorted output, 164 milliwatts, at 180 volts.

Grid Bias for A.C. Tubes

Although the method of using the voltage drop in the plate circuit of a tube for grid bias and the way to figure the resistance value are simple, there may be some who are still puzzled by this system. The resistance used for the "C" bias voltage is connected between the plate circuit and the filament or cathode (depending on the type of tube). This connection between the plate circuit and the cathode completes the plate circuit. If a resistance is introduced in series with this circuit, there will be a voltage drop through the resistor, according to Ohm's Law—$E = I R$, or the voltage drop is equal to the current in amperes multiplied by the resistance in ohms.

The value of the resistor is determined by using Ohm's Law and is quite simple. By reversing the equation shown above, we have $R = \frac{E}{I}$, or the resistance is equal to the required voltage divided by the current in amperes flowing in the plate circuit. If we have a tube which draws 3 milliamperes and requires 6 volts of grid bias for a certain plate voltage, the resistance is equal to 6 divided by .003 (the current in amperes) or the resistance value is 2000 ohms. When more than one tube is used on the same biasing resistor, the resistance is equal to the required voltage divided by the sum of the plate currents.

Fifteen-Volt Tubes

Besides the two standard A.C. tubes, the '26 and '27 which have been described, there are several special types of tubes which are in use. The first of these is similar to the '27 in the purpose for which it was designed. It differs from the '27 in several respects. In the first place, it utilizes a four-prong socket. Second, the electron-emitting element or cathode is connected to the filament and is part of the filament circuit.

The filament of the tube is designed to operate on a voltage of 15 instead of the usual 2.5. The current used by this filament is much lower than the regular '27, being 0.35 ampere. The tube is similar in its characteristics to the other '27 tubes, except for the differences mentioned. The grid return for this tube is made to the side of the filament circuit which connects to the cathode.

Another special duty tube is one similar to the '40 high-mu tube, but designed for A.C. operation. This tube has a filament similar to the '26 tube, and the same precautions must be exercised when using it. There are several other special-duty tubes on the market, but their use is so limited that it is not worth while considering them here.

The A.C. Screen-Grid Tube

The next tube in the list is one which is attracting interest everywhere. This tube is being used in practically all the new manufactured sets and it promises to become a favorite in A.C. operation. This type includes the '24 and similar screen-grid tubes designed for A.C. operation.

The operation of the A.C. screen-grid tube is similar to the '22 type, but there are a number of differences in the construction and the characteristics. In the first place, the amplification factor of the '24 tube is higher than that of the '22 tube. Although the theoretical amplification factor cannot be reached in actual practice, as shown elsewhere in this discussion, the higher value of this factor has some effect on the actual amplification of the tube. Also, the mutual conductance is much higher than that of the D.C. tube, and gives a very desirable characteristic from the standpoint of amplification.

In order to obtain stable operation in circuits designed to give normal gain per stage it is necessary to use shielding to separate the input from the output circuits. The internal construction of the tube makes it unnecessary to use neutralization providing external couplings are eliminated by correct shielding. The need of plenty of shielding to separate the coils, tubes, condensers and chokes cannot be emphasized too much. A single flaw in the isolation of the various circuits will often result in complete failure of the set.

The manufacturers recommend that the screen-grid voltage be varied to control the volume. The curves in Fig. 3 show the relative amplification with different screen grid voltages. In cases where more than two stages of radio-frequency amplification are used, it is often difficult to prevent some grid current from flowing. The result of this current on the amplification is shown in the curve for the '24 tube. It will be seen that the amplification falls off after a certain value, and that the further increase in the screen-grid voltage causes a reduction rather than an increase in the volume. This condition is not a good one for several reasons. In the first place, the presence of grid current results in very broad tuning; also, the plate current increases over its recommended value and the over-all performance of the tube is affected.

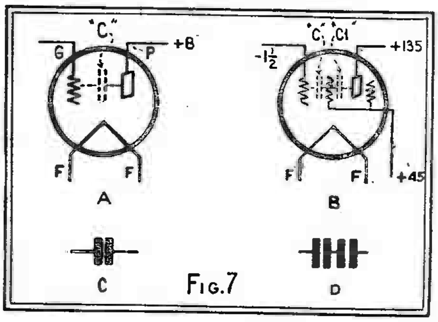

Fig. 7

Just "why" a screen-grid tube has a low grid-to-plate capacity is illustrated above.

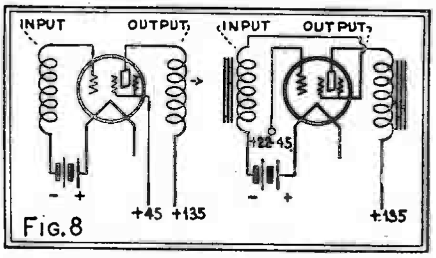

Fig. 8

"Screen-grid" and "space-charge" connections are diagrammed above.

In order to overcome the difficulties encountered by the flow of grid current, one of the large manufacturers (the de Forest Tube Co.) has changed its '24 specification so that the normal grid bias is 3 volts instead of 1.5. This allows a larger grid swing and in many cases entirely cures the trouble. In order to limit the amplification in sets using several of these tubes, some manufacturers limit the screen-grid voltage to a value lower than the rated maximum. In the new Radiola 44 receiver, the maximum screen-grid voltage is 45.

By referring to the curve again, it will be seen that the amplification increases rapidly up to a value about 50 volts and tapers off after that point. Because of this bend in the characteristic, the use of a higher screen-grid voltage does not increase the amplification to any great extent.

The '24 tube is an excellent bias detector either with small or large signal inputs. When small R.F. inputs are obtained, the screen-grid voltage should be kept at 35 to 45 volts and the control-grid at minus 3.5 or 4.5 volts. The output in this condition feeding into a 200,000-ohm load choke fed with a one-volt radio-frequency input modulated 22% is 5½—both voltages Root-mean-squared values. This handling value is more than sufficient to operate a '45 at full output with direct coupling or two '45 tubes in push-pull with a low-gain audio transformer.

Filament voltage, 2.5 volts; current 1.75 amperes.
Plate voltage, 180 maximum and recommended value.

Plate current 4 milliamperes at 180 plate volts.
Grid bias, 1.5 volts; screen-grid voltage 70 (positive).
Plate resistance 400,000 ohms.
Amplification factor, 420 (theoretically).

POWER TUBES

The first tube is the '20 type; this was developed as a companion to the '99 dry-cell tubes, so that better quality than was possible with the latter could be obtained. This tube has a small amplification-factor and, for this reason, is suitable for use only in the *last audio* stage of the set. Its filament is different from that of the '99 tube, in the amount of current required to supply the correct heat. The '99 tube requires only six one-hundredths of an ampere; the '20 tube needs thirteen (132 milliamperes). It may be operated from dry cells, if so desired; but more economical operation results from the use of a storage battery. With a 6-volt battery, a resistor of 20 ohms should be connected in the negative lead, in order to reduce the voltage across the tube to the correct value. The characteristics are:

Filament voltage, 3.3 volts; current 0.132-ampere;

Plate voltage, 135; current 6.5 milliamperes;
Grid bias, 22½ volts;
Plate resistance, 6600 ohms;
Amplification-factor, 3.3;
Undistorted output, 110 milliwatts.

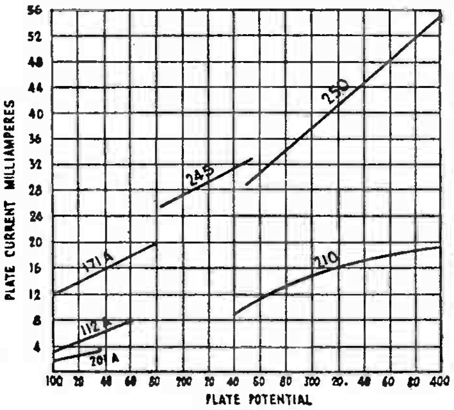

Fig. 1

A convenient chart of the comparative operating conditions of the power tubes. It does not indicate comparative outputs.

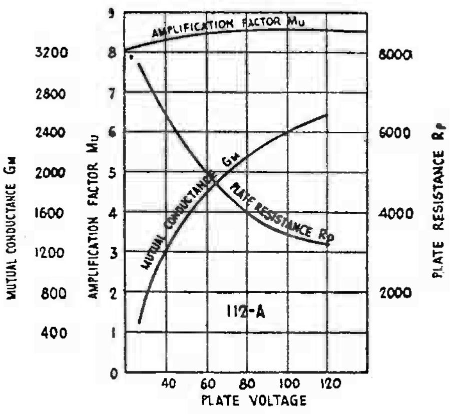

Fig. 2

The characteristics of a '12A-type tube. With the aid af graphs such as these are receivers designed.

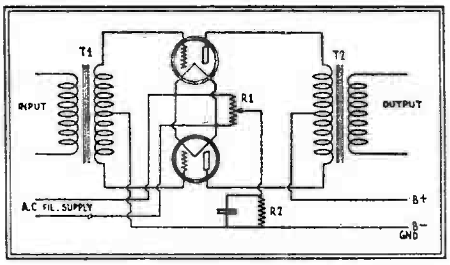

Fig. 3

Alternating current through a filament requires a center-tapped balancing resistor to take out hum, beside the grid-bias resistor.

The '12A Tube

Next in order is the '12A type tube; the original design was known as the '12 tube, and had a filament which required half an ampere to bring it to the correct temperature. Later, the tube was changed by the substitution of a new filament, which needs only one half the current of the older type.

The '12A tube, although it was designed before the era of electric sets, is suitable for operation, not only from a storage battery, but with a step-down transformer as the filament supply. Also, because of its high amplification-factor, it is a very good general-purpose tube; even though it was not designed for this purpose. The internal capacity is comparatively small, permitting its use as a radio-frequency amplifier.

When used as a power tube, the '12A is most suitable for small sets; the undistorted output is not very great and in large sets, where the volume is high, the tube will be overloaded. Since it has a comparatively high amplification factor, (8), the volume of a small set, however, will be greater than if a tube such as the '71A were employed.

Fig. 2 shows the main characteristics of the '12A. The amplification-factor is the horizontal line at the top; it will be noticed that this is not straight, as would be the case if the "Mu" of the tube were exactly constant. It is interesting to note that the *mutual conductance increases* with an increase in plate voltage, while the *plate resistance* decreases. If a graph were made with grid voltage, instead of plate voltage, as the horizontal factor, the two volumes would also increase and decrease in the same manner.

When using the '12A tube with alternating current, the filament circuit should be shunted by a 15-ohm resistor with an adjustable center tap. The plate and grid returns are made to this tap, which is then adjusted to the point where the least hum is heard. (If the step-down transformer has a center-tapped winding, this resistor is not necessary; for the tap on the transformer is then used for the grid and the plate returns.) This is RI, Fig. 3.

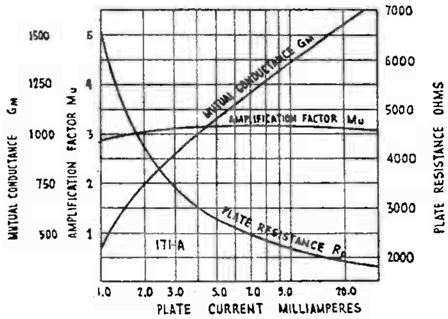

Fig. 4

The '71A gives less amplification, but more output, than the '12A. Its plate resistance is very low.

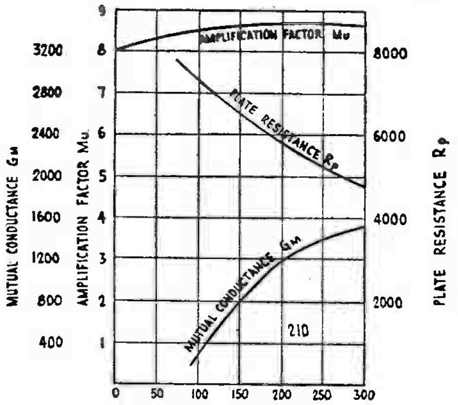

Fig. 5

The '10 tube has both high amplification and high output. Its efficiency increases rapidly as the maximum voltage is approached.

Filament voltage, 5 volts; current 0.25-ampere.

Plate voltage, 90 to 157 volts; plate current 5.5 milliamperes at 90 volts, 7 ma. at 135 volts and 9 ma. at 157 volts; Grid bias, 4½ volts at 90 plate volts, 9 volts at 135 and 11 volts at 157;

Plate resistance, 5300 ohms at 90 volts, 5000 at 135;

Amplification-factor, 8;

Undistorted output, 120 milliwatts at 135 volts, 300 at 180 volts.

The Old Favorite

The '71A tube is the next in line; this is probably the most popular power tube ever made; it was first produced as the '71, with a filament drawing half an ampere, as in the '12 type. It has a low amplification-factor and a very low output impedance, and for this reason it is useful only in the last stage of the set. The plate current of this tube is too high for the average loud-speaker winding and therefore some type of output-coupling transformer or impedance must be used in order to protect the winding from breakdown. This output-coupling device may be used to balance the impedance values of the tube and speaker, if desired, in the manner described some time ago.

As in the case of the '12A type, the '71A filament may be operated from either a battery or a step-down transformer. The undistorted output of the '71A tube is much higher than that of the two tubes described above and, with most receivers, except where extreme volume is desired, sufficient volume can be obtained without overloading this tube The output value can be increased almost three times by using the "push-pull" system, with two of these tubes.

Fig. 3 shows the wiring of a push-pull amplifier. It will be noticed that two resistors are connected between the filament and the plate wiring; they are used to obtain "C" bias and filament balance. R1 is the filament-balance resistor; it has a value of ten to thirty ohms, and the adjustable center tap permits the plate and grid circuits to be connected to any point on its length. In this way, these two circuits may be connected to the effective center point of the filament circuit, with the result that the A.C. hum is reduced to a minimum.

The other resistor R2 gives the "C" bias. The condenser shunting this resistor is a very necessary piece of apparatus; for otherwise the signal currents in the plate and grid circuits must pass through the resistor, and this would result in a reduction of signal strength or a loss of quality. The only other parts in the amplifier are the transformers, which are of the usual type of push-pull design. No comment is necessary about these instruments; the only requirement is that they be of the best quality, in order to maintain high fidelity in the output.

Since its development, the '71A tube was used in almost all the popular commercial sets until recently; but the appearance of the new '45 tube with its higher output value has threatened its supremacy to some extent. The following are the figures for the '71A:

Filament voltage, 5 volts; current 0.25-ampere:

Plate voltage, 135 to 180; current 16 milliamperes at 135 volts, 20 ma. at 180;

Grid bias, 27 volts at 135 plate volts, 40½ volts at 180. (When A.C. is used for the filament supply, it is necessary to increase this bias value by one half the filament voltage—in this case, 2½ volts.);

Plate resistance, 2,200 ohms at 135 volts, 2000 ohms at 180;

Amplification-factor, 3;

Undistorted output, 330 milliwatts at 135 volts, 700 milliwatts at 180.

Fig. 4 shows the characteristics of the '71A tube plotted against plate current in milliamperes. The value of "mu" and the curves for the plate resistance and mutual conductance are plainly shown. The use of a graph of this type gives a very clear and concise impression of the characteristics of the tube under different conditions.

The first three tubes in the power-tube series just described, have very definitely limited output values, beyond which considerable distortion occurs. Where more than a moderate signal strength is required, as in the case where a large room, an auditorium, or an outdoor area, is to be filled with either radio or phonograph music, some means has to be devised to get a larger value of undistorted output.

It is comparatively easy to obtain a grid swing sufficiently large to produce tremendous volume, especially with the new screen-grid tubes. It is necessary only to obtain some device which will successfully handle this wide grid-voltage swing, and couple it to the speaker, in order to obtain the desired results.

The Largest Power Tubes

The '10, '50 and '45 tubes are a series successively designed with this point in view. The last-named tube is the latest and, because of the comparatively low plate voltage required as well as the high output, it is becoming very popular in all types of sets.

The filaments of these three tubes are heavy, and require high currents to bring them to the correct temperature. For this reason, alternating current is invariably used as the source of supply in commercial practice. The filament of the first of these tubes, the '10, requires 7.5 volts at a current of 1¼ amperes. This tube has a higher amplification factor than the other two and, for this reason, it is more suitable in audio channels where the grid swing is not very high. Its undistorted output also is lower than that of the others; and these characteristics place a limit on the use of the tube. Fig. 5 gives the characteristics of the tube plotted against plate voltage up to 300.

Filament voltage 7.5; current 1.25 amperes (A.C. from a step-down transformer);

Plate voltage, 250 to 450;

Plate current, 12 milliamperes at 250 volts, 16 at 350, and 20 from 400 to 450;

Grid bias, 18 volts at 250 volts, 27 at 350 and 35 at 425 volts;

Plate resistance, 5600 ohms at 250 volts, 5000 at 425;

Amplification-factor, 8;

Undistorted output, 340 milliwatts at 250 volts, 925 at 350, 1540 at 425;

The largest tube of the series is the '50, which was designed to supply a very large amount of current to the speaker, and will handle a very wide grid swing without overloading. Like the '10 tube, this valve requires 1.25 amperes for the filament at 7.5 volts. In this case also, alternating current is invariably used as the source of supply. This tube will give more than three times the undistorted output of the '10; it has a lower amplification factor, however, and must be given a wider grid swing than the smaller tube, to obtain the same volume. The advantage is in its greater power-handling ability.

Like the '71A tube, the '50 has a very low A.C. plate resistance, and it is advisable to use a coupling device of the type which permits matching the plate and speaker impedances. Because of the high voltages and current needed to operate this tube, special precautions must be observed in using it. If a short-circuit should occur or one of the filter condensers break down, the result might be a fire. It is therefore necessary to use the highest grade of condensers in all the high-voltage circuits of both the amplifier and the plate-supply unit; and it is advisable also to place fuses in both of the primary leads of the power transformer, to prevent trouble. These fuses should be rated at about 5 amperes, so that they will melt very quickly. The wiring of the amplifier should be done with extreme care and well-insulated wire must be used.

Filament voltage 7.5; current 1.25 amperes;

Plate voltage, 250 to 450;

Plate current, 28 milliamperes at 250 volts, 35 ma. at 300, 45 at 350, and 55 from 400 to 450;

Grid bias, 45 volts at 250 plate volts, 54 at 300, 63 at 350, 70 at 400 and 84 at 450;

Plate resistance, 2100 ohms at 250 volts, 2000 at 300, 1900 at 350 and 1800 from 400 to 450.

Amplification-factor, 3.8;

Undistorted output, 900 milliwatts at 250 volts, 1500 at 300, 2350 at 350, 3250 at 400 and 4650 at 450. In push-pull, two '50 tubes will give over thirteen watts—sufficient to operate a battery of dynamic speakers for a theatre or public address system.

The Type '45 Tube

The '45 type power-tube is a favorite. It will give a power output between those of the '71A and the '50, with comparatively low plate voltages. It is designed primarily for operation in domestic A.C. sets and, for this service, it incorporates a very sturdy filament which, however, is made for a 2.5-volt supply.

The tube is designed to operate at plate voltages from 180 to 250 volts maximum. In electrical characteristics it is similar to the '71A in that the amplification factor is 3.5, the plate resistance is 1900 ohms, and the mutual conductance is 1850 at a plate voltage of 250. The '45 tube is not interchangeable with the '71A, however, because of the lower voltage required for the filament. When inserted in the socket designed for the '71A, a '45 will burn out, if the filament winding of the power transformer does not go first. The '45 filament requires 2.5 amperes to bring it to the correct temperature; and a fluctuation of 5%, above or below the rated voltage of 2.5, is permissible with no ill effects. The last-mentioned characteristic tends to reduce the effect of line-voltage changes which have been so disastrous to tubes in some locations.

One precaution must be observed in operating the '45 tube; the grid bias must never be removed. If the "C" battery should become short-circuited, the plate current would increase sufficiently to overheat the elements and would probably cause permanent injury. It is desirable to obtain the grid bias from a resistor in the plate-return lead; it will be found that this compensates almost completely for changes in plate potential. By this we mean that, if the plate voltage either increases or decreases, the grid bias also increases or decreases, thus maintaining the balance. This is because the change in voltage causes a proportionate one in the plate current. When the plate current changes, the voltage drop through the resistor does so too (according to Ohm's law); with the result that the "C" bias is altered proportionately.

A very handy chart of plate-current values for different tube charts has come to our attention, recently, in the technical bulletin of one of the large tube manufacturers; this is reproduced as Fig. 1. It is very handy data for the service man to keep beside his set tester.

TUBE TESTING

The methods by which the engineers in charge determine how the tube became inoperative should be of interest to most of our readers. The manufacturer is naturally

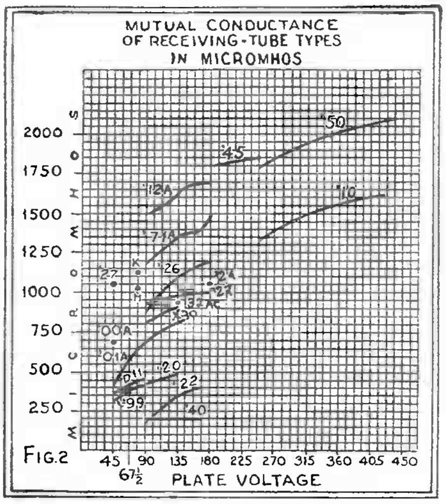

FIG. 2

In rating a tube's value by its mutual conductance, its type must be considered. Here are average values for standard tubes at normal operating voltages.

concerned with the returned tubes; as he wishes to locate the sources of the most frequent faults. A number of special instruments have been developed to facilitate this work. First, the tube is examined to discover which unit of the plant made it; almost all makers put code numbers on tubes.

Next, the tube is subjected to a number of tests, similar to those described in preceding articles, in order to obtain its actual characteristic curves. These tests measure the mutual conductance, plate current, filament emission, hum, gas content, leakage current, etc.; in this way, the tube's deviation from the standard is determined; and then the tube is taken apart in order to locate the exact cause of its failure.

In case the filament circuit is found open, for example, it is possible to tell whether the tube was short-circuited, or whether it was subjected to unduly high voltages. The filament is placed under a microscope and its condition is noted; if it is burnt-out, the end is found to be *tapered* at the point of fracture. If a short-circuit occurred, between the filament and the grid, a small darkened or broken spot on the grid tells the story.

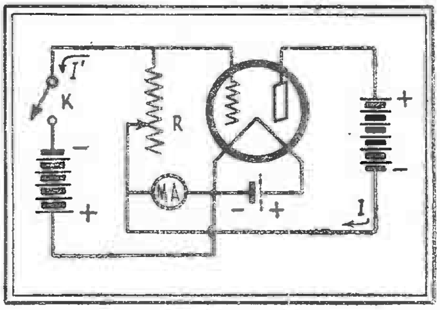

Fig. 1

This circuit makes it possible to test quickly individual tubes to determine their mutual conductance, the best index to their quality.

Many tubes are injured or made inoperative by mis-handling; if the tube is dropped or jarred badly, the elements are often knocked out of place. This causes a change in the characteristics; even though the filament is not broken or the "envelope" (bulb, etc.) cracked. The tests of the characteristics of the tube soon reveal this defect. A record of the cause of breakdown is kept and, if a number of the tubes made by the same machine unit are returned, the cause of the trouble is looked into at that stage of the process; and if possible, the weakness is overcome.

Manufacturers are doing their part to produce perfect tubes through rigid inspection, careful testing of material and finished products, and ample packing. Every piece of material which enters the tubes is first subjected to exhaustive tests to determine its quality and purity. Each tube is tested before it leaves the factory; in some cases, the tubes are given several complete tests, at different steps of manufacture, or samples are taken from each lot; and if one defective tube is found the entire lot is retested. More and more attention is being paid to the packing; "drop tests" with cases of tubes are made to be sure that the cushioning is adequate.

A Simple Tube Tester

It may be said that the one measure of a tube's characteristics, which is better than any other single indication, is its mutual conductance. In the November issue, the writer gave a simple method for measuring

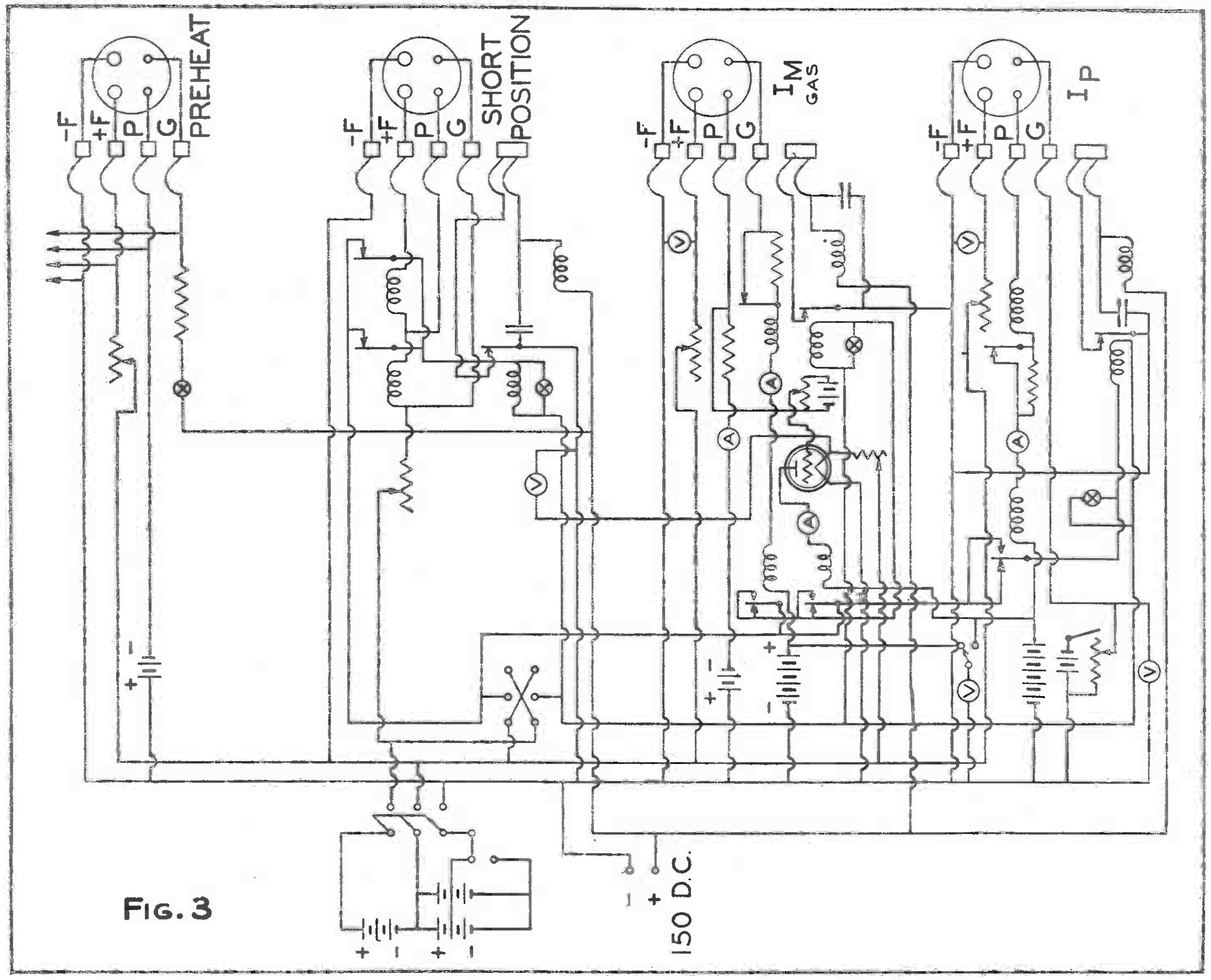

FIG. 3

Not only does the circuit above look complicated, but it is! It is that of a large testing machine which tube makers use to sort out defective tubes on completion of the processes of manufacture. A great many mechanical features are incorporated in the design, but cannot be shown here; the relays (here shown as meters) close other circuits which work the ejectors that throw out all tubes whose test readings depart from the standard too much, either above or below the limits of tolerance.

the leakage current and the gas contents of a tube; this test is very good and is of service in checking a great number of tubes, for it is very simple.

The *mutual-conductance* test, however, gives a direct measure of the values of the tube. It is to be understood, of course, that as between *different types* of tubes, one with a lower conductance may be better suited to certain purposes. (See Fig. 2, showing the average mutual conductance of the various tube types, under the customary combinations of plate and grid voltages.) The "high-mu" and the screen-grid tubes, with their very high amplification factor and their low plate current, have, consequently, a very low mutual conductance. They are, however, satisfactory in the special circuits designed for them. On the other hand, the general-purpose tubes, and especially the '01A and the '27, may be used in any position where a large output current is not demanded; and it will be noted that the A. C. '24 ranks much higher than the '22.

The power tubes have the highest mutual conductance, because their plate resistance is very low; they may be used efficiently (speaking from an engineering standpoint only) in other positions than the last audio stage. Where cost is an object, however, they do not commend themselves to the set designer. It is interesting to note that in other countries, where electric set operation is comparatively rare, and battery consumption an important matter, tubes are designed for specially low current consumption, in comparison with their amplification—in other words, high mutual conductance. We find, for instance, the British HL210 with a filament current of 0.1 ampere at 2 volts, and a plate current of 3.2 milliamperes at 150 volts with 1½-volt grid bias. This tube, with amplification factor of 20 and plate resistance of 23,000 ohms, has a mutual conductance of 870; which may be compared with the 200 of the American '40 type, or the 800 of the '01A type with its lower amplification. In comparison, the dry-cell tubes first used in American commercial sets are strikingly low in mutual conductance.

However, as between tubes of the same type, the mutual conductance *increases with the plate current;* and, therefore, a high "Gm" reading of a tube indicates that its filament emission is very good. The mutual conductance of a tube, it will be remembered, is the ratio of the amplification-factor to the plate resistance. (The amplification factor is conveniently first multiplied by one million, to obtain the rating in *micromhos* instead of *mhos.*) If either of these two values is abnormal, the mutual-conductance reading will show that something is wrong. Any misplacement of the tube, a high leakage-current, will all be shown in a mutual-conductance test.

It remains only to locate a simple method for measuring this value, in order to have an ideal tube tester. One such device, which was developed by E. V. Appleton and has been published several times in different books, is described here. Fig. 1 shows the arrangement. When the key K is closed, the potential difference applied between the filament and grid equals I'R, where I' is the current in R. This change of grid potential causes a change of plate current equal to

$$I'R\frac{I}{Eg} \text{ (approximately.)}$$

The currents I and I' flow through the galvanometer MA in opposite directions and, if R is adjusted until the galvanometer reading shows no change, then

$$I=I'R\frac{I}{Eg}$$

or, in other words,

$$\frac{I}{Eg}=\frac{I}{R}$$

The plate circuit does not contain any external resistance except that of the galvanometer, which is small and can be neglected; the tube's internal plate resistance is Rp. When the grid potential is small, it may be stated that

$$\frac{I}{Eg}=\frac{\text{“Mu”}}{Rp}$$

and, since,

$$\frac{I}{Eg}=\frac{1}{R}$$

then

$$\frac{\text{“Mu”}}{Rp}=\frac{1}{R}$$

The value "Mu"/Rp is the mutual conductance. Then, if we have a calibrated resistor for R, it is a simple matter to obtain the correct value of the mutual conductance.

The galvanometer may be a low-reading milliammeter with a full-scale deflection of about 0-10. The grid battery should be about 4½ volts, and the plate and filament batteries should be proper for the tube under test. For R, the experimenter may either calibrate a resistor or obtain one calibrated by a precision-instrument company.

If only an approximate value is desired, a variable resistor of good make should be obtained, and a scale made to suit the position of the pointer. (By this we mean that the full resistance may be assumed to be that of the instrument's rating; then one half of the resistance winding will give half the resistance; one quarter of the winding, a quarter of the resistance, etc.) By measuring a number of tubes in this way, the correct point on the scale for a good tube will soon be found; and we will then have a direct-reading tube tester and mutual-conductance bridge.

Manual Testing

In quantity production of receiving tubes, it is necessary to use some fast but sure method of rejecting those tubes which are defective and passing the good tubes on to the packing department. (We will later discuss the method of making tubes more thoroughly.) Four or five years ago, when quantity production of vacuum tubes was just commencing on a large scale, the general procedure was to check each tube manually, at the maximum rate of 225 per hour, for a number of characteristics. These included the filament current, the filament emission, plate current, "gas current," electrical leakage, amplification constant, plate resistance and mutual conduction. In some of the smaller factories, tubes are still tested by hand; but it is not possible to use this method in the largest plants, as too great a number of hand-test machines would be necessary, with a corresponding number of operators.

Machine Testing

Under the spur of a real need for test equipment functioning with super-human speed and accuracy, a machine has been made which automatically sorts the tubes into groups—those with broken filaments; those with low emission, or "gassy" ones, as well as those with high leakage between the elements; those with characteristics outside of the specified range of plate current; and fourth, the good tubes. By classification of the defects in this way, it is possible for the engineers to trace back the sources of trouble and make the necessary corrections. (This single fact alone means a great benefit to the tube user, in the form of a dependable product).

The machine consists of an electrical control-board, joined by means of a cable to the mechanical apparatus which connects the tubes in succession to the various test circuits. An automatic loading device with moving belts conveys the good and the defective tubes separately away from the machine.

The fundamental idea of the tester is that tubes are automatically placed in a socket and, by means of a rotating disc equipped with contact rings and brushes, they are successively connected into electrical circuits specially designed to test for the desired characteristics. The circuits are also designed so that they operate an ejector which will throw out a tube which is defective in any test. A control relay with a sensitivity of .05-ma. (each control relay is nothing but a meter; a contact arm being substituted for the indicating vane) releases the ejector relays, so that tubes which pass each test satisfactorily are permitted to travel on to the next. The arrangement of the contacts is such that the test circuits allow the meters to come to a fixed position before the ejector circuit is connected.

The ejector consists of a solenoid which pushes the defective tube into the entrance of a chute; and a good tube must pass three of these chutes before it is finally delivered as O. K. by the machine. The diagram of the test unit is shown in Fig. 3, so that interested technicians can get an idea of the arrangement.

Four Rejections

The first circuit is designed to eject tubes with defective filaments; this classification includes open filaments, short-circuits between the filament and the plate, and short-circuits between the grid and plate. The circuit consists of two telephone relays, a protective resistor, and a power-control relay which operates the solenoid. The second circuit removes tubes classed as gassy, leaky (with leaks between filament and plate or between grid and plate), or with low filament emission. The automatic tube tester also makes a double check on the first test, by the second circuit's also rejecting the tubes under that class. The third circuit rejects tubes with either low plate current or high plate current. The diagram will give some indication as to just how these tests are made —at a speed of 8,000 tubes per hour.

POWER SUPPLY TUBES

We now come to tubes which have been designed, not for reception in the strict sense of the word, but to provide to the receiving tubes, and regulate, a supply of electricity from more convenient sources than the chemical batteries originally used. Such tubes are classified into two principal divisions: Rectifiers, which convert alternating current into "pulsating" direct current; and regulators, which maintain a constant voltage across their terminals, or a constant flow of current through their circuits. The regulator tubes, being less essential to set operation, are not so familiar to the radio worker as the rectifier tubes; but the importance of the former is increasing, as the desirability of an unvarying electrical supply for a receiver becomes appreciated by the general public, as it always has been by the experimenter.

Fig. 1

At A, the operation of a rectifier during the half-cycle when the anode P is positive with respect to the filament F. The input voltage variation during the half-cycle is shown at a, the output current at c. During the next half-cycle d, when the plate is negative, there is no flow of current through the system; because the electron stream—which is the plate current—is repelled by the plate as shown at e. The final result is a pulsating D.C. output as shown at the lower right; where c and f are half-cycles of current output, spaced by half-cycles of inactivity, as at F. Compare with Fig. 5.

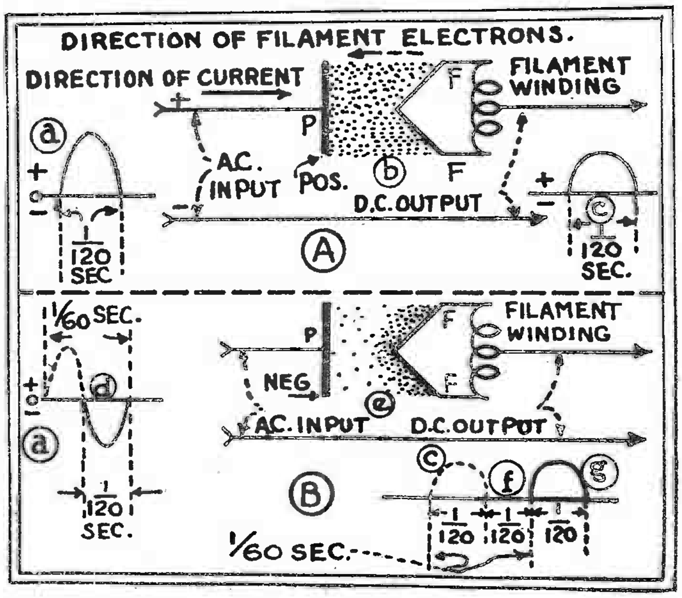

Rectifier Tubes

The rectifier tubes, used in radio reception, may be classified into three groups of types: The "thermionic" or filament-emission tubes, now in most general use; the ionized-gas, hot-cathode (filament) tubes; and the ionized-gas, filamentless, cold-cathode tubes.

In the first, or true "thermionic" type, are included all of the tube rectifiers which have filaments, except those of the Tungar type. The last-named, or hot-cathode tubes, as do the cold-cathode types, operate on a different principle—the "ionization" of the gas in the bulb—which will be explained a little further on.

The tubes of the '80 and '81 type are classed as true "thermionic" types; that is, *they depend on the emission from the filament of electrons which travel to the plate to produce their rectifying action.* The electrons, having a negative charge, are attracted to the plate when the plate is charged positively; this occurs once during each "cycle" of the alternating current. When the current reverses its direction, so that the plate is negative, the electrons are repelled from the plate and many return to the filament. It can be seen very readily that the direct current at the output of the rectifier is fluctuating (Fig. 1A at *C*).

Unilateral Conductivity

The operation of any rectifier depends on its "unilateral conductivity;" this formidable expression means only that it lets currents pass through it in but one direction. For example, let us consider a "cycle" of alternating current.

At the beginning of each cycle, a flow of current increases from zero in one direction to maximum value, and falls again to zero; this is the first half-cycle. A flow of current in the opposite direction then builds up to an equal maximum, and falls off again to zero, ending the cycle. In 60-cycle current, each half-cycle of current flow lasts 1/120-second.

The usual representation of a half-cycle will be found in Fig. 1A, at *a*. During the half-cycle when the line-current supply to the rectifier plate is positive, there is a heavy electron flow from filament to plate inside the tube, shown graphically at *b*. The conductive "bridge" permits the line-current to be measured as positive potential on the D.C. side of the rectifier. Incidentally, the voltage of this output *c* of the rectifier is not as high as the input voltage, because of the internal resistance of the rectifier.

During the next half-cycle (Fig. 1B) the polarity of the alternating current has been reversed; though an A.C. voltmeter shows the same potential for this current, the polarities of the rectifier's electrodes have been reversed. But the filament emits no stream of electrons; and therefore the current will not pass through the rectifier; for there is nothing to conduct it. During this half-cycle *d*, therefore, no current is indicated at the output of the tube. We have 1/120-second of inaction, as at *f;* on the next half-cycle *g*, there is an output of current, and so on.

From "oscillograms" obtained by scientific investigators, it has been shown that the thermionic-tube rectifier is practically perfect in its "one-way" regulation of current.

Examining Fig. 1B more closely, we see that the rectifier supplies current to the power unit of a receiver during only one-half of the time; and the output current fluctuates in value. In order to make it useful, therefore, we must have a filter system to "smooth" out the inequalities, and give us an electrical supply of constant voltage and flow. The condensers used in a power pack serve the purpose of storing up the surplus energy passed by the rectifier while it is operating, and discharging their stored current while the rectifier is idle. The chokes add still more to the constancy of the flow, which should arrive at the voltage divider free from pulsations and "ripples."

The action we have described is that of a "half-wave" rectifier (so called for obvious reasons) like the '81-type tube. The '80 type, however, has two plates, which are so connected that when either one is negative with respect to the filament, the other is positive, and therefore draws current. This is accomplished by the use of a tapped transformer in the A.C. input, as in Fig. 3. For this reason, the current has twice as many active pulsations between current "nodes," and it is not necessary to draw so high a current during the active half-cycles. This makes it unnecessary to store as much current in the condensers, or to use such large chokes for smoothing; and the arrangement is more economical. As to the advantages of "full-wave" over half-wave rectification, more will be said in connection with Fig. 5.

The ionized-gas, hot-cathode (filament) rectifiers include such types as the Tungar, Rectigon and similar tubes. Although these are similar in general appearance to the thermionic types, their principle of operation is entirely different. The glass bulb or "envelope" is filled with an inert gas

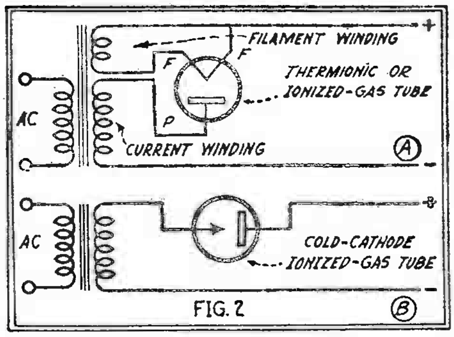

FIG. 2

The circuit arrangement of a "filament" rectifier of the '81 type, is shown at A. Note the absence of a filament winding when the rectifier is of the "cold-cathode" type, as at B. "Half-wave" rectification is shown in both diagrams.

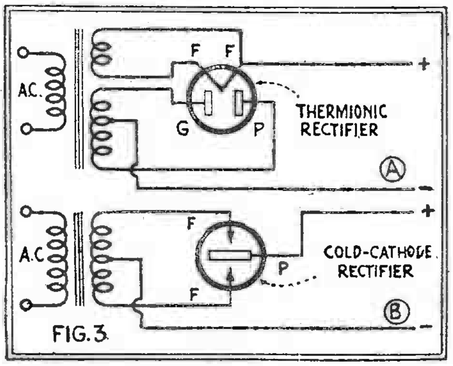

FIG. 3

At A, the connections to the power equipment which result when a type '80 tube is plugged into the socket; at B, those resulting when a "cold-cathode" rectifier is similarly plugged into the receptacle for "full-wave" rectification.

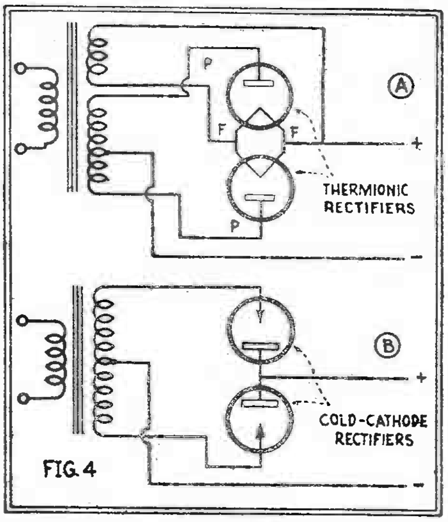

FIG. 4

The circuits above are utilized to obtain full-wave rectification with a pair of half-wave rectifier tubes; the thermionic type is indicated at A, and the cold-cathode type at B.

such as argon, helium or neon (usually the first) to about 1/75th of atmospheric pressure. The filament emits electrons which, in turn, "ionize" or break up the molecules of gas by colliding with them in their race for the plate. *The electrons freed by this "ionization" produce most of the conduction of current.* This is in contrast with the thermionic type, which depends entirely on the electrons given off by the filament for its conduction.

That the filament is comparatively unimportant in the gas-filled tube is shown by the fact that under certain conditions, batteries can be charged with a cold, unlighted filament.

The third class of rectifiers is different from either of the others. It uses no filament, and the envelope is filled with gas, usually helium; although argon and neon have also been used. It contains several electrodes, different in size and shape. In operation, when alternating current of the correct potential is applied, a field is created between the electrodes and, at moments of correct polarity, the gas between the electrodes becomes ionized by the strong electric field. The molecules of the gas are changed in structure, resulting in conductivity between the electrodes.

The shape and size of the electrodes play an important part in the operation; because the "free electrons" from the gas can collect very easily on the *large* electrode, but comparatively few come in contact with the *small* electrode or electrodes. If the electrodes were all of the same size, a strong "back current" (one flowing in the opposite direction to the main flow) would limit the usefulness of the tube. In fact, this was one of the principal difficulties to be overcome by the engineers who designed the tube.

Each of the three classes of rectifiers described above has its own application in receiving sets. The thermionic and the cold-cathode types are best suited to high-voltage, low-current work, because of their inherent characteristics. These two tubes compete for popularity in "B" power units and other similar devices. The hot-cathode type is not very suitable for high-voltage operation but, since a great electron flow results from the combined filament and gas activities, a large amount of current can be handled. This type of tube, therefore, serves very well, as a rectifier for battery chargers and "A" power units.

Half- and Full-Wave Rectifiers

We have explained above that tubes can be made to operate on either half of the cycle, or on both halves. The half-wave rectifier, which contains only two elements, is connected as shown in Fig. 2. The full-wave rectifier contains three elements, as shown in Fig. 3. Full-wave action can be obtained, however, from two half-wave rectifiers with a single A.C. potential source, by the method shown in Fig. 4.

When the output from the rectifier must be extremely steady, as in the case of an "A" or "B" power unit, it is much better to use the full-wave system than the half-wave arrangement, because of the greater ease in filtering the rectifier output. As explained before, the number of fluctuations in the output of a full-wave rectifier is twice that of the half-wave rectifier. In other words, if the supply current is 60-cycle, the output will be direct current with 120 pulsations, similar to those shown in Fig. 5; A represents the "shape" of the alternating current supply; B the rectifier current from a full-wave rectifier, and C the rectifier current from a half-wave rectifier.

Importance of Design

The output from a rectifier of the thermionic type is directly dependent on the electron flow from the filament and the size and shape of the plate and the glass bulb or envelope. The use of a filament capable of a very high electron discharge, together with a large, heavily-constructed plate and a large envelope are the requirements for a high-current tube. The plate must be constructed in such a way that it radiates heat very quickly; and the glass envelope must be large, so that it will not overheat. In certain types of rectifier tubes, used for large transmitters, a water-cooling system is employed, to keep the plate from melting. However, for receiving purposes, correct design of the plate is sufficient.

In the tungar-type of tubes, the factors which control the current-handling ability are the size of the envelope, the size of the filament and the size of the plate. The envelope must be large, so that a considerable quantity of gas can be contained in the space between the elements; and, also, so that it will have sufficient surface to radiate the heat liberated in the process of rectification. The filament must be long and heavy; so that its electron emission will be considerable and that it will have a long life. The plate must be made so that it will not overheat. In some cases, a carbon plate is used; and at full capacity this heats to a red glow on the side nearest the filament.

In the cold-cathode types of tube, the factors controlling current output are the size of the envelope, the comparative size of the elements and the degree of gas pressure used. The large envelope is needed to dissipate heat; the correct pressure of gas is necessary to make the rectification most efficient; and the large difference in the size of the electrodes is needed to produce unilateral conductivity.

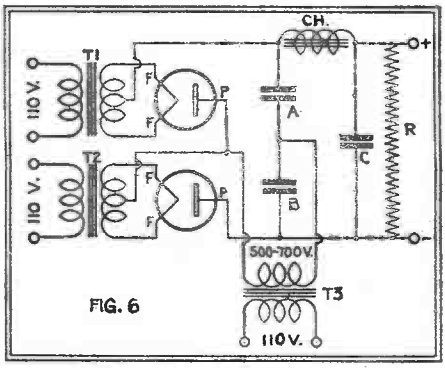

FIG. 6

Schematic of a standard "voltage doubling" device. Each tube operates within its safe rating, but the combined voltage output exceeds this value.

Why Rectifiers Break Down

It has been noticed, recently, that many rectifier tubes used in "B" power units have not had the long life that was customary in the past. One well-known tube engineer attributes this shorter life to the extra strain placed on these tubes in receivers of recent models, designed by many set manufacturers. The general use of the '45 tube, or even two of these tubes in push-pull, is taxing the rectifiers to the limit. In the past, the '71 tube was used and very few sets had a plate-current drain that approached the limits of the tube.

The authority mentioned above explains the situation as follows: "It would seem improbable that the current demands of the '45 tube should cause such an action; since the '45 tube requires but 250 volts on the plate and 50 volts on the grid or, in other words, a total of 300 volts. This, however, is not all that the rectifier tube is called upon to furnish. Since there is a voltage drop *in the tube itself* of nearly 100 volts, the rectifier must start with 400 volts; in order that the '45 tube or tubes may be supplied with the normal plate and grid voltages. When this unusual demand is made, the rectifier is quite unequal to the task, primarily on account of the filament."

The author of the above statement discussed the improvement of the filament, and also reduction of "back current" due to the plate becoming hot. When the plate cannot dissipate the heat, it becomes slightly incandescent and emits some electrons, which cause a current in the direction op-

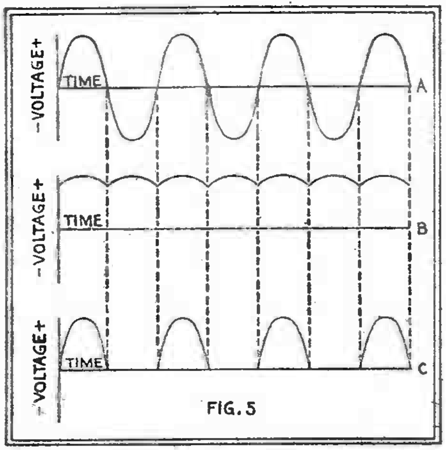

FIG. 5

The changes of voltage in an alternating-current circuit are shown at A; the pulsations of the direct current passed by a full-wave rectifier at B; and the output of a half-wave rectifier at C. It will be seen how much more "smoothing" is needed by the last.

posite to the desired flow. This back current not only reduces the output of the tube, but greatly shortens its life.

If the set constructor or designer uses more care to be sure that he is not overtaxing the rectifier tubes, longer life will result.

Voltage-Doubling Devices

The increased use for high-power amplifiers, comprising tubes which belong in the transmitting category, has caused a demand for some convenient way of obtaining the high voltage required for the plates of these tubes. The '81 tube is able to supply about 600 volts without injury but, by using several tubes of this type, we can obtain potentials up to about 1600 volts.

Fig. 6 shows one of these "voltage-doubling" circuits. Two individual filament transformers (T1, T2) are required, and a step-up transformer, T3, supplies about 500 to 700 volts. This particular unit is quite satisfactory, only for currents up to about 50 milliamperes. The two condensers A and B must have at least 1000-volt working rating—preferably more—and C should be a 2000-volt condenser. Each should have a capacity of 4 mf. The choke coil should have an inductance of 20 to 30 henries, under the required current load. A resistor R must be connected across the output. It should have a resistance of about 100,000 ohms; note that it must have a current-carrying capacity of 30 to 60 milliamperes.

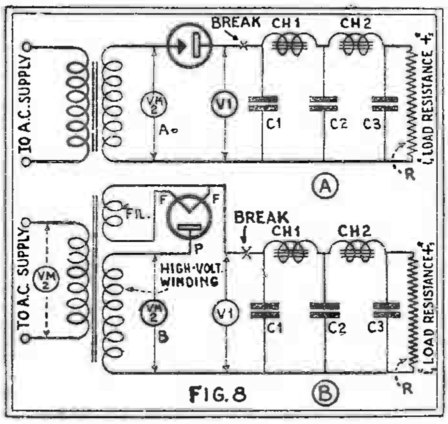

FIG. 8

To test the operation of a rectifier tube disconnect the positive side of the tube from the filter system, as shown at X; this is conveniently done with a special plug in the rectifier socket. Readings are then taken across the tube with the A.C. voltmeter VM2 and D.C. voltmeter V1, to show its action under no load.

When using any voltage-doubling system, the filament circuits of the tubes *must* be closed *before* the high voltage is applied. If this is not done, the initial surge is liable to cause an "arc-over" inside a tube, or one of the tubes is liable to overheat.

A second arrangement, which will supply much more current than the first, is shown in Fig. 7; it required more apparatus than the first circuit, however. When it is operating correctly, currents up to about 150 milliamperes can be drawn from it. *Three* separate filament transformers (T1, T2 and T3) are required, as well as a transformer T4 with a tapped secondary, supplying a total output of 1000 to 1500 volts. The tap is at the center of the winding.

The filter system for this unit is the same as the first—each of the first condensers (A and B) must stand a working voltage of 1000 and condenser C at the output of the filter should have a working voltage rating of 2000 volts. The choke in this case must be made to carry more current than the one used in Fig. 6; for the output of the rectifier tubes is much higher.

When using a power unit of this type, extreme care must be employed to insulate all the parts and to employ the best possible apparatus; as a break-down in the condensers or the transformer would probably result in a fire.

Fuses should be placed in each of the connections from the transformer to the line; five-ampere size will be about right.

Note: It is necessary to use extreme care in approaching any of the parts of such a unit when it is connected to the line; as the high voltage is very dangerous. Before any changes are made, the power line should be entirely disconnected from the apparatus, and the condensers discharged.

Testing Rectifier Tubes

The Service Man often encounters the necessity of testing a rectifier tube, to determine whether it is the tube or some other part of the apparatus that is defective. The easiest way to determine whether the tube is at fault is to replace it with another one.

However, if the Service Man is equipped with several meters, he can make electrical tests to find whether the tube is working. The necessary apparatus comprises a high-voltage A.C. voltmeter, a high-voltage D.C. voltmeter, and a special plug to fit the rectifier-tube socket.

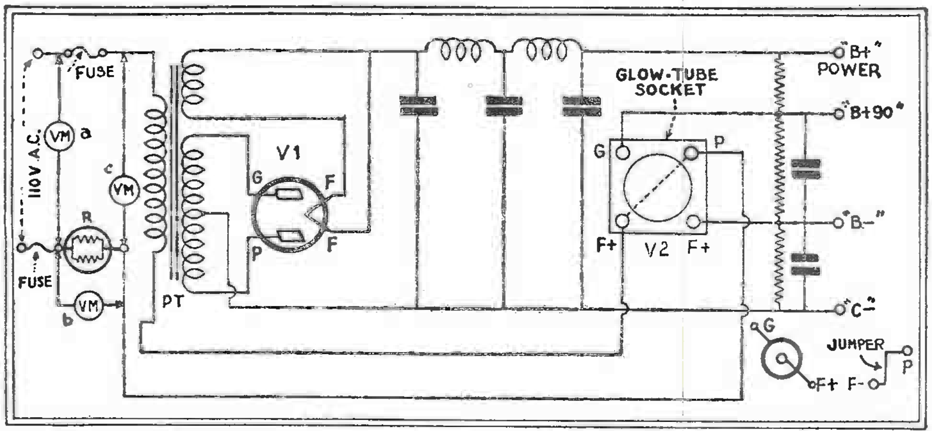

Fig. 9

The ordinary arrangement of a power unit with a voltage-regulator tube V2 across the detector and a ballast tube R in the circuit of its special power transformer. The jumper at the lower right connects two prongs of the glow-tube V2, and automatically breaks the power input when this tube is out of its socket.

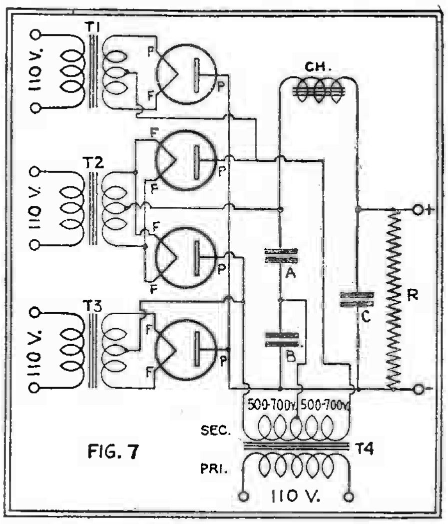

FIG. 7

A voltage-doubling system which will supply more current than that of Fig. 6. This is in use principally by amateurs for transmitting purposes.

The required range of the meters depends on the voltage produced by the power unit. For most units, meter ranges of 0-500 volts will be suitable, for both alternating and direct-current readings. The special plug consists of the base of an old tube, equipped with a four-prong socket to hold the rectifier tube, and a terminal strip with four contacts, one for each of the wires protruding from the base.

First, the output of the transformer should be checked, with the A.C. meter. To do this the rectifier tube is removed from the power unit, and the special plug placed instead in its socket. Then the A.C. voltmeter is connected between the anode (plate) prong and the negative terminal of the power unit. This connects the meter between the ends of the secondary winding. In the case of the '80 or any other full-wave tube, the same test should be made between each of the anode prongs and the negative terminal; in order to test the output of both sides of the secondary winding.

It will be noted that in the '81 tube the plate connects to the usual "P" prong on the socket, and in the '80, the two plates connect, respectively to "P" and "G." In the Raytheon gas-filled tubes, however, which operate on a different principle, the anodes (corresponding to plates) connect to the two "F" prongs of the socket. The cathode of a tube of this kind connects to the "P" prong. For this reason, the tubes are not interchangeable and cannot be tested without a change of external connection.

If the transformer is supplying the correct A.C. voltage (which must be somewhat higher than the D.C. output voltage of the unit) the rectifier tube should be placed in the socket mounted on the special plug. This connects it again into the unit, but allows external connections to be made to the tube circuits.

In the case of Raytheon gas-filled rectifiers, the matter of testing the operation of a tube is quite simple. The wire from the tube which leads to the first filter choke and condenser should be disconnected from the tube; this can be done by merely disconnecting the wire from the corresponding prong of the special plug which connects to the socket mounted on top.

Then, with the D.C. voltmeter, V1, the voltage between this prong on the tube (the "plate" prong for the Raytheon tubes) and the negative terminal of the power unit should be measured (Fig. 8A). If no voltage reading is obtained, the connections should be checked very carefully, to be sure that none are defective. If the voltage readings are very low, it is a "sure bet" that the tube is at fault.

With filament-type rectifiers, such as the '80 and '81, the wire connecting the filament winding to the first filter choke should be removed, to disconnect the rectifier from the filter system. This is more difficult than with the Raytheon gaseous type, but is essential; for the trouble might be located in the filter or voltage divider.

The D.C. meter, V1, is connected between the filament of the rectifier and the negative terminal of the power unit (Fig. 8B). The connection is sometimes made to a tap in this winding on the transformer, and sometimes to one side of the filament. The results are the same in either case. If the D.C. voltage is correct, it will be found somewhat higher than the output voltage of the unit; because of the resistance of the filter chokes, etc. If this voltage is very low, the rectifier tube is usually at fault. Before testing the secondary voltage of the transformer with the A.C. voltmeter VM2 it is well to test the line voltage at the input to the power unit; this can be done with the same meter. (See dotted connections.)

The requirements of the standard '80 type, *full-wave* thermionic rectifier tube are as follows: filament supply, two amperes at five volts (A.C.); plate supply, 125 milliamperes at 350 volts, both maximum values. This gives an output whose D.C. voltage and amperage depend on the type of filter, one falling as the other rises. The base is the standard four-prong UX, as explained above.

The trade names and designations are Radiotron (Radio-Victor Corp.) UX-280; Cunningham, CX-380; Sonatron X80; Pilotron (Pilot Radio & Tube Corp.) P280; Speed (Cable Radio Tube Co.) 280; Champion, UX-280; Sylvania, SX-280; Gold Seal, GSX-280; Arcturus, 180; Ken-Rad, 280; Ray-O-Vac, RX-280; (French Battery Co.) CeCo, R80; DeForest, 480; Perryman, PR-280; Diatron (Diamond Vacuum Products Co.) 280; Eveready-Raytheon, X-280.

The *half-wave,* heavy duty thermionic rectifier, known as the '81, fits the same base, as explained above; although the grid prong is unused. The filament supply is 1.75 amperes at 7.5 volts; the plate supply 85 milliamperes at 700 volts.

Trade names are Radiotron and Champion, UX-281; Cunningham, CX-381; Sylvania, SX-281; Gold Seal, CSX-281; Ray-O-Vac, RX-281; Sonatron, X-281; Speed, Ken-Rad, Diatron, 281; DeForest, 481; CeCo, R-81; Perryman, PR281.

The cold-cathode, ionized-gas rectifier is the Eveready-Raytheon BH, with large standard UX base, to which the connections are special: it requires a plate supply of 125 milliamperes at 350 volts. A tube of this type is produced as SH85.

A larger size of this tube, the Eveready-Raytheon BA, takes 350 milliamperes, at 350 volts; its large current output makes possible series-filament operation of D.C. type tubes in a receiver.

Voltage Regulation

One of the greatest bugaboos in A.C. receiver operation, especially in the outlying districts around cities, is the trouble caused by line-voltage fluctuations. Needless to say, these variations cause a great percentage of tube failures, due both to the excess filament voltages and to the high plate voltages applied to the tubes, as a result of periods of high line-potential.

Tubes are now being made with stronger and more rugged filaments than when they were first introduced; so that the number of "casualties" has been reduced considerably. The trouble, however, was so prevalent that several special tubes were developed to regulate, to a further degree, the potentials applied to the receiving set.

These tubes fall into two classes: The first is the *D.C. output-voltage* regulator, or "glow"-tube; and the other is the *A.C. line-voltage* regulator, or "ballast"-tube.

The glow-tube is made for service in "B" power units and insures proper voltage regulation of the D.C. output voltages. In addition to the voltage-stabilizing effect, the tube is equivalent to an extra filter condenser across the output; thus reducing the possibility of "motorboating" or other interstage-coupling effects in the receiver, and also tending to reduce the hum. Its effect has been compared to that of a 20-mf. condenser connected at the same position in the circuit.

Engineering Data

One point not very well understood about the regulator tube is the fact that additional current is required to operate it, and that this must be included in the total current consumption of the receiver. The current normally used amounts to about 30 milliamperes; so that a power unit operated close to its maximum output cannot be equipped with such a tube without overloading it. To attempt it would cause a reduction in the output voltage, and prevent the correct operation of both the power unit and the glow tube.

The "'74" type glow-tubes are particularly valuable in power units where the current requirements are not constant; or are not known at the time when the unit is designed. The use of variable resistors of high current-capacity, in the voltage divider, for output-voltage regulation has not been entirely successful; since the resistors often become noisy or burn out. If a glow-tube (V2, Fig. 9) is connected between the negative "B" terminal and the 90-volt terminal, it will maintain this voltage constant under wide variations of output current. With a current flow from 10 to 50 milliamperes at the 90-volt tap this tube will keep the voltage constant. It must be used with a series resistor, in order to limit the current to about 50 milliamperes; otherwise it may be injured. If desired, two tubes may be connected in series and they will maintain a voltage of 180, as a single tube does a voltage of 90. The same precautions must be observed with two tubes in series as with a single tube.

In operation the tube shows a purple glow surrounding the cathode (the large circular plate) which accounts for its name of "glow"-tube. If the tube connections are reversed a bright glow occurs at the small electrode. Proper results are not obtained unless the connections are made as in the diagram (Fig. 9). The terminals from the "P" and "F—" socket prongs are connected together internally at the base of the tube and this "link" connection may be used as a line switch in the transformer primary. This insures that the power unit cannot be turned on until the '74 tube is inserted in its socket, and that V1 and V2 cannot be interchanged with resulting damage. If the rectifier tube is inserted in the regulator socket, the primary circuit is still open and no current flows in the unit.

The operation of the glow-tube depends on the variation of resistance between electrodes, separated by certain gases, when different voltages are applied. If the receiver draws more current (thus leaving less for the glow-tube) the voltage applied to the glow-tube is reduced and the resistance of the glow-tube *increases;* resulting in a greater amount of current being available at the output tap. (When the resistance of the glow-tube increases, it consumes less current than normally, thus reducing the "load" on the eliminator.) On the other hand, if more current is available, the resistance of the glow-tube *decreases* and a greater current flows through it. A difference in the line-voltage affects the applied voltage, and has the same effect as a difference in the current used at the 90-volt tap. As the voltages at other taps are controlled to some extent by the current at this tap, all of them are affected by the tube, though not as greatly as the 90-volt output.

The Ballast-Tube

The ballast-tube type, of which the 876 is representative, is intended to regulate the input voltage to the primary winding of the power transformer in a power unit. Like an electric lamp, it has a screw base. The tube passes 1.7 amperes, at any applied voltage between 40 and 60. The *current* in the secondary winding of the transformer must be such as to bring the voltage on the ballast-tube to 50, under normal line-voltage. For example, if the line-voltage averages 115 volts, (VM at a, Fig. 9), the transformer should be designed to take 1.7 amperes at 65 volts under normal load, (VM at c); the remaining 50 volts are required for the operation of the ballast-tube (VM at b). For completeness, 5-amp. fuses are shown.

While the line-voltage varies, up to 10 volts on either side of 115 volts, then the voltage applied to the primary winding remains constant at 65 volts. It must be remembered that this tube cannot be used with an ordinary transformer. The primary must be made for a 65-volt input, for a 115-volt line; or a 60-volt input, for a 110-volt line.

The tube is equally serviceable on 25- or 60-cycle lines, when used with transformers designed for the available frequency. The tube becomes quite hot in operation and should be housed in a ventilated metal case, for safety in case of a defective tube.

Servicing Procedure

In the case of the glow-tube, if no glow is obtained, the voltage at the 90-volt tap should be measured. If it is lower than 90, the set should be disconnected temporarily from this tap, to reduce the load. The voltage should be measured again and, if the tube still does not flash even when the applied voltage is above 90, the connections to the tube should be examined carefully. If the wiring is correct, the tube is undoubtedly defective and should be replaced.

There is no direct method of testing these tubes, except placing them in a circuit which will supply normal conditions and observing the action. Occasionally, the glass will be found cracked, thus allowing some of the gas to escape. In other cases, if the tube has been subjected to excessive voltages for long periods, it will not glow.

In the case of the ballast-tube, if correct operation is not obtained, the applied voltage should be measured; and the primary winding of the power unit should be checked for an open circuit. The tube operates only when the load is correct; so that it is necessary to check the complete power unit to be sure that the trouble is not located elsewhere. If everything is apparently correct, and the tube still fails to supply the correct voltage to the transformer, it should be replaced by a new tube for comparison.

When operating at normal, the '76 ballast-tube, passing 1.7 amperes, heats considerably. The tube requires several minutes to heat up. The voltage increases rapidly for the first three minutes and then slowly for about seven minutes more; by which time it has reached its final temperature. During this interval the voltages on the tubes will be slightly high, but will not exceed safe values. Thereafter, the ballast-tube will maintain the voltage practically constant, so long as the device is in operation. This fact should be recalled when servicing sets that incorporate a '76.

The '76 passes sufficient current for most radio sets. However, some receivers demand a greater current input; and for these the 886-type (the '86) tube is available, with a current rating of 2.05 amperes at the same voltages as the '76.

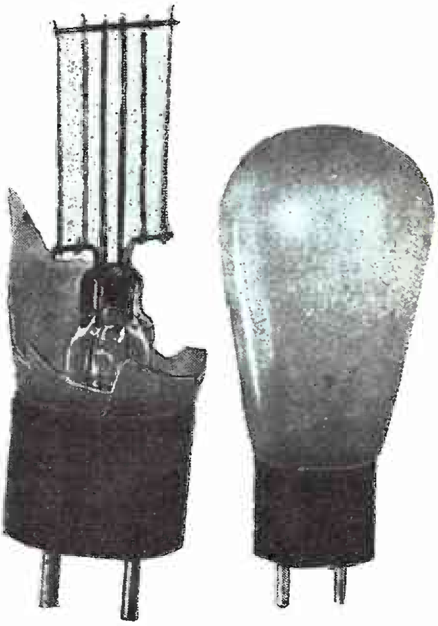

Interior and exterior of new regulator unit; the latest of such controls.

A Line Voltage Regulator

A vacuum voltage-regulation device has been developed to alleviate the effects of line-voltage fluctuation.

As generally known, fluctuating line-voltage will result in short tube life and erratic receiver operation. One way of partly compensating for this change in line-current is to tap the primary winding of the power transformer. This results in partial compensation but the results may only be temporary; a change in the current supply being counteracted only by changing the tap connection on the transformer. If automatic balancing of the line voltage could be secured, all the faults of this method would be overcome.

This result has been obtained by the use of a special resistance wire, wound to include sufficient resistance to "drop" approximately 20 volts at low line-voltage and 40 volts at high line-voltage. This resistance is contained in an inert-gas-filled bulb. This device, illustrated in these columns, has an UX-type base but only two terminals are used; the "A—" and the "plate." As these two pins are diametrically opposite each other, the tube base fits squarely on the standard tube socket.

The only requirement for the application of this resistor to any modern receiver is to have the line or power transformer wound or tapped for a primary of 80 volts. The number of turns in each secondary winding remains the same as for the customary 110-115-volt primary. Power transformers with 80-volt primaries for the use of set manufacturers are now available.

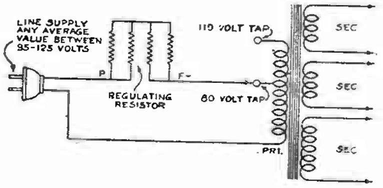

Schematic arrangement of the regulator described in these columns.

The designating number of the resistor corresponds to the current in the primary of the receiver at 80 volts. For example, the No. 6-20 unit will pass 0.6 amperes when the voltage across it is 20 volts. With a 10% increase in current, the voltage drop across the resistor will increase 100%, which means that at 0.66 amperes the voltage drop across the resistor is 40 volts. Similarly the No. 8-20 resistor will pass 0.8 amperes at 20 volts and 0.88 amperes at a 40-volt drop. Thus, if it is found that the power in the primary of the power transformer is 0.8 amperes at 80 volts, the set will require resistor No. 8-20. If the current is 1.1 amperes at 80 volts primary the set will require unit No. 11-20.

As the response of this unit to voltage fluctuation is practically instantaneous, it is possible to obtain regulation against surges and rapid line-supply variations impossible with older resistors used for the same general purpose.

The method of connecting the resistor into a power line is illustrated in the diagram appearing in these columns.

As it is necessary to determine the current at 80 volts, and as this may not be known, an approximate figure may be arrived at by applying a simple arithmetical formula after finding two factors. The first step is to measure the line-current drawn by the set; then the line-voltage at which the current was measured. Multiply the measured line-current value by 151.25 and divide the product by the actual line-voltage measured. The result is the current which will be required at the 80-volt primary.

The guaranteed life is 2,000 hours. A test-board run of 3,000 hours (15 minutes on, 5 off) on each of the models in the range available, from 0.3 amperes to 1.2 amperes, has not resulted in any sign of deterioration. This test was made at an overload of 20%.

The results of a particular regulation test will be of interest. The line-voltage was varied between the limits of 95 and 130 volts. Without the regulating resistance; the filament-voltage swing at the filament terminals of a type '27 tube measured from 2.1 to 3.0 volts. With the regulator in series with the line, the voltages delivered to the set were 105 to 117 and the filament voltage to the '27 tube was 2.3 to 2.5 volts. At the same time, measurements taken of the plate voltage delivered to the type '50 power tube in the set read 285 to 490 volts, without the regulator, and 350 to 385 with the series resistor. The effect of the high plate voltage obtained in the first instance, on the insulation of the filter condensers (particularly at peak and surge values derived from this potential) may well be imagined. That it is desirable to incorporate a device to overcome such conditions is therefore evident.

This item, called the "Amperite Self-Adjusting Line Control for A.C. Receivers," is a product of the Radiall Company, New York City. The list price is $3.50.

The R.F. Pentode

The "'39," a variable-mu R.F. pentode addition to the tube line. Every radio man should learn its characteristics. The author completely describes this newest vacuum-tube advancement.

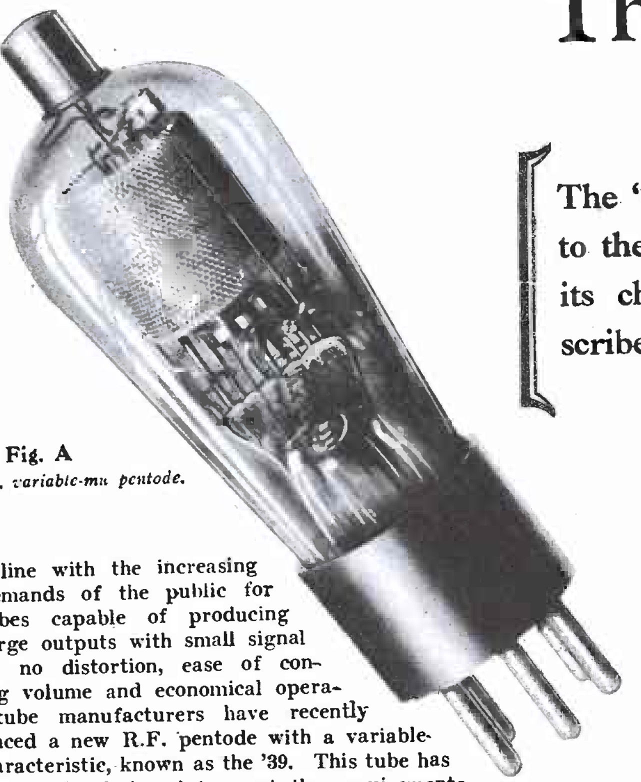

Fig. A

The R.F. variable-mu pentode.

IN line with the increasing demands of the public for tubes capable of producing large outputs with small signal inputs, no distortion, ease of controlling volume and economical operation, tube manufacturers have recently announced a new R.F. pentode with a variable-mu characteristic, known as the '39. This tube has been primarily designed to meet the requirements of automobile and D.C. line-operated receivers where power supply is limited to 90 or 135 volts. It may be used in conjunction with its older brothers the '36, '37, and '38 without any change in circuit constants.

Operation of four-element tubes is somewhat critical in view of the erratic shape of the plate voltage—plate current characteristic at the low values of plate voltage. For comparison, the plate voltage—plate current curve of a '36 is shown in Fig. 1, and above it, the curve of the new '39. The '36 curve has a large dip with about 50 volts on the plate due to the effects of secondary emission, which is obviated in the '39 by the insertion of the fifth element—the suppressor grid. This grid, as in other pentodes, is interposed between the plate and the screen-grid in order to straighten out the "bump" in the curve. Let us see how this is accomplished.

An electron, upon leaving the filament, is attracted to the positively charged plate. Upon reaching it, its velocity is so great that it dislodges electrons *from* the plate. These electrons are known as secondary electrons, which find themselves between two attractive forces, one due to the positive plate potential, and the other due to the positive screen-grid potential. If the plate potential is low, the secondary electrons will be attracted to the screen-grid, which means that the net flow of electrons *to* the plate is diminished, lowering the plate current. This is the reason for the dip in the curve of the screen-grid tube.

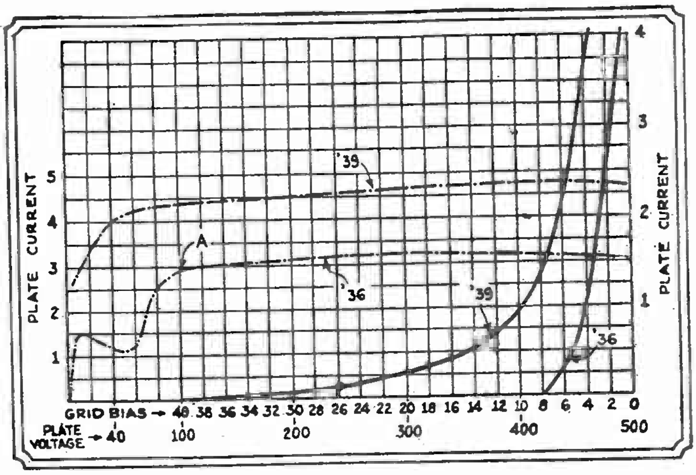

Fig. 1

The full-line curves correspond to the ordinates on the right, while the dot-dash curves correspond to the ordinates on the left.

The Pentode Element

Now if another grid be interposed between the plate and the screen-grid, and connected to the filament, the plate is offering the greatest attractive force, resulting in the secondary electrons being attracted to the plate, eliminating the undesirable dip in the curve. Thus the resulting tube, a *pentode*, has the smooth curve shown in the figure. During the time that a signal is impressed on the grid, the plate voltage fluctuates between wide limits, and if the curve has a dip, distortion is bound to result. The addition of the fifth element in a tube used for R.F. amplification results in a greater voltage output than could be secured without the use of this element.

Variable-mu tubes have been in use for quite some time and their features are well understood by the Service Man. To appreciate the characteristics of the '39, let us first examine the grid voltage—plate current curve illustrated in Fig. 1, which is accompanied by the curve of the '36 for comparison.

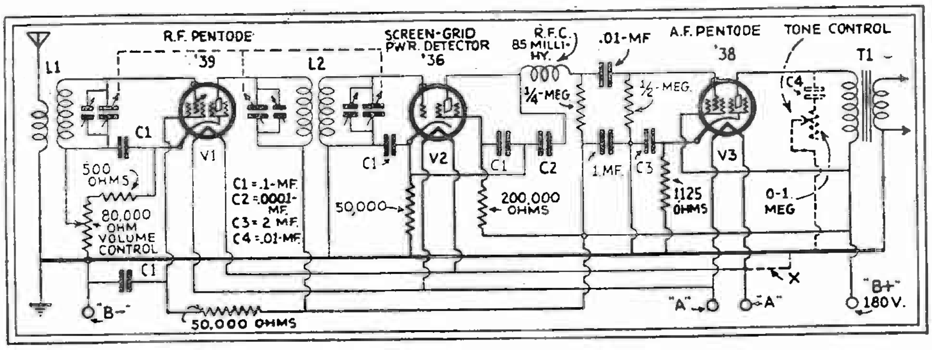

Fig. 4

Schematic diagram of a three-tube receiver using the new '39, a '36 and a '38, which is suitable for automotive work. Observe the position of the volume control.

Note first, that for small grid biases the plate current is greater in the '39 than in the '36, and furthermore the plate-current *variation*, for a given grid-voltage swing is also greater in the '39 than in the '36. This means that the mutual conductance of the new tube is greater than that of the '36. For large biases, the '36 blocks the plate current entirely, while the '39 retains its smooth variation of plate current.

True, the mutual conductance is lower for large biases than for small ones, but it is this feature that gives the tube its variable-mu characteristic. This may be verified by reference to Fig. 2. Starting with a zero bias and increasing negatively, the mutual conductance decreases in almost a straight line until a negative bias of 10 volts is reached, at which point the curve bends (concave upwards) gradually decreasing in a smooth line, until at 40 volts the mutual conductance is zero.

The Variable-Mu Action

Let us see exactly what goes on in the tube when a strong signal is being received. Assume the tube is operating at its normal control-grid negative bias of three volts, and a strong signal is impressed on its grid. To reduce the volume, the bias must be increased, and in doing so, the mutual conductance is lowered, causing a reduction in output. The stronger the signal, the greater the bias must become, and if a uniform decrease in signal strength is to result, then the mutual conductance must vary uniformly. What would happen to the signal if a '36 were used instead of a '39 may easily be predicted by reference to Fig. 2.

Fig. 3 shows the variation of mu and the plate impedance of the '39 with grid bias; these curves being accompanied by similar ones for the '36. Reference to this set of characteristics will indicate that the mu of the tube decreases for the larger values of grid biases, resulting in a reduction in the over-all amplification obtainable. This is in accordance with our previous conclusions arrived at in the study of the mutual conductance curves.

For normal operation, the negative bias on the tube should vary between 3 and 45 volts. This range should be sufficient for the greatest signals usually encountered in practice. With such large control-grid variations, it is possible that the plate and screen voltages may vary considerably, changing the operating characteristics of the tube. For good stability, however, the screen-grid potential should not exceed 90 volts when the plate-current flow is maximum, and should not exceed 135 volts for minimum plate-current. This variation in plate and screen-grid voltages will not impair the operation of the receiver in which these tubes are employed.

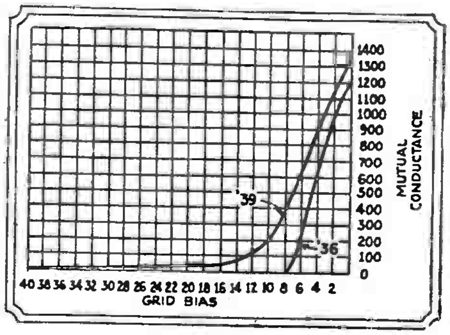

Fig. 2

The curves above show the relation between the grid bias and mutual conductance of the '39 and '36.

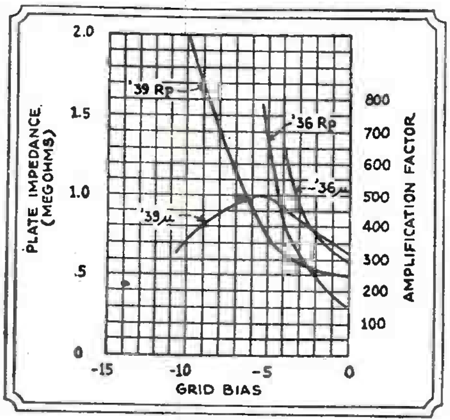

Fig. 3

The amplification factor and A.C. plate resistance for different grid biases of the '39 and '36.

The Cathode

The new five-electrode tube uses a coated cathode of the semi-quick heater type designed for D.C. operation only. Because of the cathode design, the heater voltage may vary between 5.5 and 7.5 volts during operation (which is not an uncommon range of battery voltage in an automobile battery) without affecting in any way the normal life and serviceability of this tube.

The socket of this tube is of the standard UY type and may be mounted for either a vertical or a horizontal position of the tube. Standard connections to the terminals are made, the control-grid being connected to the cap on the top of the tube.

Stable operation is secured if the recommendations of complete shielding of all the elements of a particular stage are carried out. If this is not done, the maximum possible amplification will not be obtained. Radio frequency filters in all leads entering the stage shields are desired, as only in this manner can coupling between other stages be reduced. Bypassing of the screen-grid to ground is recommended as a means of securing isolation of stages.

The screen-grid voltages may be obtained from a tap on the "B" supply battery for automotive receivers, or from a bleeder circuit across the power source in the case of D.C. line-operated receivers. A resistor in series with the screen-grid and the high voltage point may also be used to secure the desired voltage, providing the cathode resistor method of obtaining bias is employed.

The '39 as a Detector

The '39 may not ordinarily be used as a detector working directly into an audio amplifier. However, it does have a very useful application as the *first-detector* in a superheterodyne, and may be used to advantage in this position; the control-grid bias may or may not be made variable. With variable bias on the first-detector the peak oscillator voltage should be made about one volt less than the minimum grid bias (approximately seven volts). This practice will eliminate the possibility of the first-detector drawing grid current causing cross-modulation, which the tube is inherently supposed to minimize. With a fixed bias, the peak oscillator bias should be considerably less than the grid bias in order to prevent grid current flowing and causing grid distortion.

It should be noted that by varying both the first-detector grid bias and the R.F. and I.F. biases, additional control is secured.

Because of the advantages in faithful and well-controlled amplification which have heretofore been difficult to obtain, we can well expect the new lines of automotive and D.C. line-operated receivers to be closer in performance to the well-equipped A.C. receiver than ever before.

This tube should also find special favor with short-wave experimenters who are endeavoring to sound out the possibilities of receiving in the neighborhood of five meters. The very low input capacity (3 to 4 mmf.) and the almost negligible plate-grid capacity (.0025 of 1 mmf.) open a new field for investigation.

Operating Characteristics

The operating characteristics are as follows: Filament potential, 6.3 volts (D.C. only); filament current, 0.3-amp.; plate potential, 90 to 135 (180 max.) volts; screen-grid voltage, 90 volts; control-grid voltage, 3 volts; plate current, 4.5 ma.; screen-grid current, 1.7 ma.; plate impedance, 300,000 to 680,000 ohms; amplification factor, 285 to 700; mutual conductance 950 to 1050 micromhos, mutual conductance at 40 volts bias, 1 micromho.

A circuit diagram incorporating this new tube is illustrated in Fig. A, the constants for which are included in the diagram.

REPAIRING SCREEN-GRID TUBES

DON'T throw away a screen-grid tube if the control-grid tip should pull off the top, leaving only the lead sticking up. Clean out the cap, and around the top of the bulb; clean the end of the control-grid wire, and solder to it a short length of fine wire.

Then, procure from a paint store a small amount of litharge (yellow oxide of lead) and a small quantity of glycerine. Mix a small quantity of the litharge into the glycerine, until a stiff paste is formed; pack the grid cap with this, and run the control-grid lead of the tube through the paste and out from the small hole in the cap. Press the cap down upon the glass, clean away the excess paste; and allow this cement to set for twenty-four hours. Then clean the cap, and solder the end of the wire to it; and the job is finished. You will find the tube as good and as strong as new; I have used this method for some time and it has never failed me.

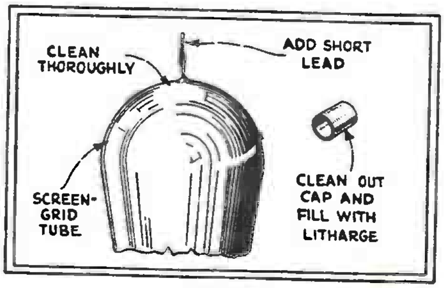

Fig. 1

The loosened cap of a screen-grid tube may be cemented back into place, quite satisfactorily, in the manner shown.

The Triple-Twin

The Triple-twin or Two-in-one Tube Constitutes a Two Stage Direct Coupled A. F. Amplifier in the One Envelope. Data on this Tube are Given in the Text.

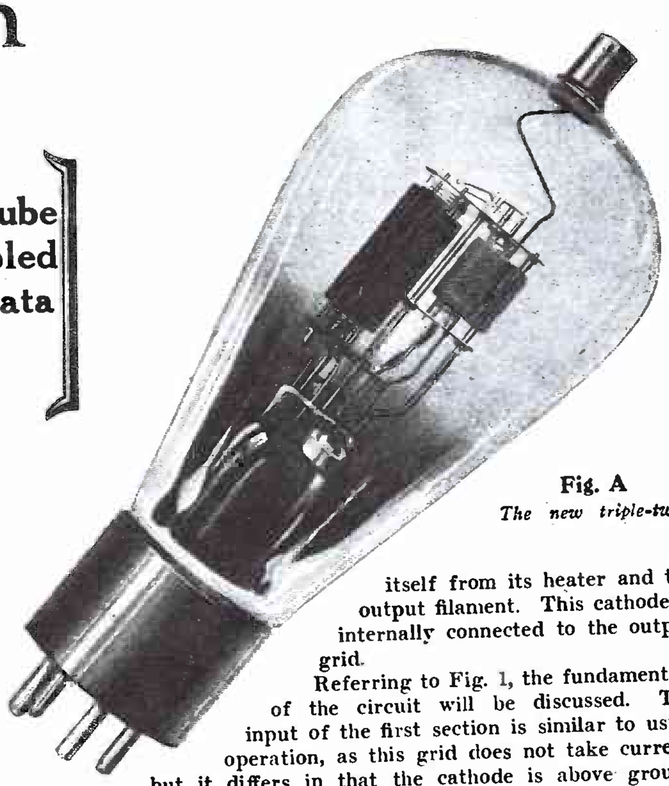

Fig. A
The new triple-twin.

IT is customary practice to consider the efficiency of an output tube as the ratio of A.C. power to D.C. plate dissipation. For a given power output, when the input signal is confined to the negative portion of the grid voltage—plate current characteristic due to grid-current limitation, the anode voltage to produce this output must be high to draw the electrons through the negative field produced by the heavily-biased grid. When using a zero grid-bias and allowing the signal to swing equally into the positive and negative regions, the same power output is obtained at greatly reduced plate voltage.

In actual *triode* operation, the efficiency is lowered by the *necessity* of operating into a load about twice the tube's internal impedance. The "triple-twin" illustrated in Fig. A, however, operates into an output load nearly equal to its own impedance (which represents an ideally loaded generator).

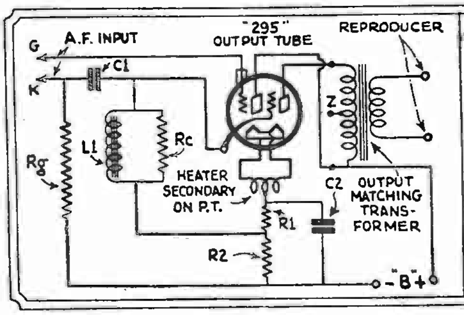

Fig. 1, left. *Diagram of a direct-coupled amplifier using the triple-twin.*

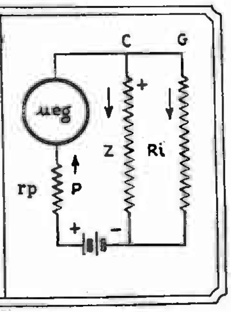

Fig. 2, right. *The equivalent of the diagram in Fig. 1.*

In *pentode* operation, a positive auxiliary (suppressor) grid reduces the space-charge effect, thus improving the efficiency, as compared to a triode. However, the auxiliary grid consumes energy, and a "cathode grid" is necessary to reduce eccentric characteristic curvature caused by primary and secondary plate electrons. To overcome the shielding effect of this latter grid, a higher plate potential is necessary. Further reduction of efficiency is caused by the necessity of operating into a load approximately one-fifth of the tube's internal impedance.

In analyzing the efficiency of an amplifier, the ratio of power output to the combined D.C. plate-dissipation of the component tubes must be considered. Therefore, if the sensitivity of one tube is high enough to eliminate a stage or stages, the effective efficiency becomes greater.

Fundamental Circuit

The triple-twin, "295," and its associated circuit permits positive grid swings and utilizes *self-compensation* for the flow of grid current. This tube contains two sets of three elements; the first set handles the input, and the second, the output. The input section employs an indirectly-heated cathode in order to electrically isolate itself from its heater and the output filament. This cathode is internally connected to the output grid.

Referring to Fig. 1, the fundamentals of the circuit will be discussed. The input of the first section is similar to usual operation, as this grid does not take current, but it differs in that the cathode is above ground potential. The signal reaches the cathode through a small condenser C1, offering a low impedance to the incoming signal. The grid receives its bias by the D.C. drop in the load impedance of the first section and the IR drop in resistance R2. The D.C. return path to this grid is through resistance Rg. It is significant that the load impedance of the first section exists between cathode and ground and is substantially the combined parallel value of resistance Rc and the input grid impedance of the second section. The inductance L1 is shunted across this combination but its impedance is high, except at low frequencies, compared to the other values, and its function is to allow a low D.C. resistance path for grid and plate returns. Its D.C. component also augments the voltage drop in R2 but the effect is negligible as the resistance of its winding is small. Resistance R1 establishes the grid of the output section several volts negative and is only necessary in A.C. operation to suppress hum. Condenser C2 bypasses the audio frequency. The plate circuit of the second section is identical to triode operation.

Theory

It is apparent that when the grid of the second section swings positive, and therefore draws current, its impedance cannot be considered constant, but some function of the positive cycle of the voltage developed across cathode and ground. *This simply represents a changing load to the first tube.* It is significant that this voltage exists between cathode and ground because it is then in phase with the pulsating plate-current. This means that during the time the second grid is positive, the applied signal is likewise positive. There exists a slight phase difference between these two voltages depending upon the reactance of the circuit. This is, of course, oppo-

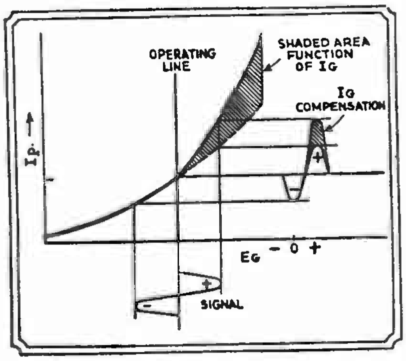

Fig. 3

The difference between the solid and dotted portions represents the additional plate current supplied by the first tube.

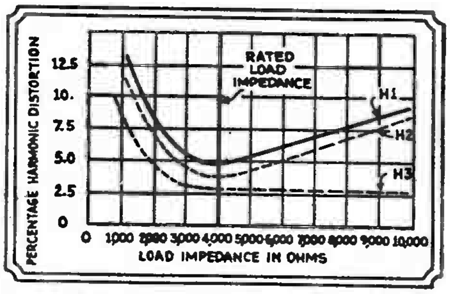

Fig. 4

At rated load, the fundamental output H1, is less than 5 per cent. Observe that the output impedance is equal to the tube's impedance.

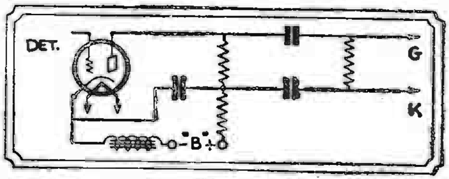

Fig. 6

Suggested diagram for a television amplifier. Since there is no phase shift, the triple-twin is especially adaptable for television use.

site to normal operation where the output voltage is 180 degrees out of phase with the signal.

The simplified equivalent circuit given in Fig. 2 is useful in analyzing the triple-twin. In order to maintain a voltage across Z, which represents the effective load-impedance of the first section, independent of the internal grid resistance Ri, the current through Z must *not* be a function of the grid current of the output tube. To satisfy this condition, the voltage delivered by the first section must be likewise constant. The input plate characteristics are designed to maintain a nearly constant value regardless of the changing load. As the effective load-impedance decreases, the plate impedance likewise becomes lower, which tends to produce a constant voltage. The changing load exists as already explained, while the signal is positive.

The spreading and curvature of the plate characteristics are in the right direction to establish a low enough plate impedance for full grid-current compensation. The extra current demanded by the lower grid-impedance is supplied as graphically demonstrated in Fig. 3. On the left of the operating line, the Eg-Ip characteristic is shown with a constant load. On the right, this line is approaching the ordinate and its rate is a function of the magnitude of the positive cycle. The shaded area represents grid-current compensation. The grid-current peak is shown as part of a sinusoid. In reality, the non-linear shape of the Eg-Ig characteristic alters this form, but the compensation also nearly assumes this irregular shape. From the foregoing analysis, it is evident that the grid bias is not a function of grid current, and therefore, remains steady.

Load Impedance

The proper load for minimum distortion may be equal to the internal impedance which also permits maximum power transfer. The output and distortion characteristics as a function of load impedance approach an ideal condition as shown by reference to Fig. 4. The high-frequency power losses caused by increased impedance of the dynamic speaker are less than in triode operation and therefore produce a flatter overall frequency characteristic. This feature will allow a greater latitude for speaker designs and will eliminate the necessity of certain resonant peaks for obtaining high register.

Some attention must be given to the shunt resistance Rc which is the effective load-impedance of the first tube. This value controls the peaks of harmonic distortion throughout the power output range.

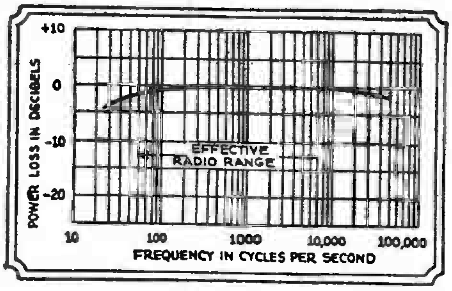

Fig. 5

Fidelity curve of the triple-twin. This curve was taken with a resistive load, but observe that it is flat far above the audio frequencies used in radio communication.

Frequency Response

The fidelity of this new tube is good. Figure 5 is typical, and shows that the high register is flat far above the audio-frequency range. The frequency characteristic of the coupling inductance has little effect on the shape of this curve because of the coupling shunt-resistance. The curve was taken with resistance coupling input and a pure resistance output load. Resistance coupling will probably be seldom used in broadcast receivers employing this tube because of their combined detector-amplifier advantages. However, in Fig. 6, a resistance-coupling circuit primarily developed for television and special applications is shown.

Power Sensitivity

The power sensitivity is high due to the no-loss effects in direct coupling and the high gain in both the input and output sections. The effective grid area of the output section may be large, as the plate current is not limited by a strong negative field. This allows high amplification with a low plate impedance.

The usual problem when employing high-gain tubes, that of eliminating grid to plate coupling, becomes small as the high overall gain is divided between the two sections. For the first section, the value of the bypass condenser is small. Although the gain in the last section is greater than in a power triode, the bias resistance value is less. Consequently, the capacity for effective bypassing can be directly compared with triode operation.

This tube was designed in the laboratories of the Cable Radio Tube Corporation.

The Positive Grid Tube

In public address work, where relatively large power outputs are required, recourse must be made to the use of several tubes in a push-pull or parallel push-pull connection in order to secure the desired output. For such work, amplifiers are usually operated on the straight portion of the grid voltage—plate current curve in order to obtain an output that resembles the input in wave shape. When so operated, amplifiers are said to be of the class "A" type.

The main disadvantage of class "A" amplifiers is that a maximum efficiency of only 50 per cent may be secured—and this with the load impedance equal to the internal impedance of the tube. As is well known, any change of load impedance from this optimum value results in a decrease in efficiency. Furthermore, even with only 50 per cent efficiency, the output is not free from harmonics, and therefore the load impedance is usually made twice the tube's impedance in order to reduce the harmonic content of the output.

The Positive-Grid Tube

In some types of transmitting stations, the amplifier tubes are so biased that no plate current flows when the carrier is not modulated. When the grid swings positive, the plate current rises to a high value, but when it swings negative, the plate current remains at zero. The action is thus similar to that of a rectifier, and is illustrated in Fig. 1. When so operated, an amplifier is said to be of the class "B" type.

This method of operating an amplifier has several advantages and disadvantages. First, because the plate current flows for only half a cycle, it is distorted and special means must be employed to eliminate the harmonics that are present when the plate current is distorted. Second, since the grid of a tube that is so operated only functions during the positive portion of the grid voltage, the amount of grid current that may flow may be excessive and result in serious distortion of the grid voltage. The main advantage of the method is that, since plate current flows only during the positive portion of the cycle, the amount of heat that is generated per second is much less than if plate current flowed during the entire second.

This latter condition means that the plate current *that may be made to flow* during the positive half-cycle can be increased considerably before the same amount of heating of the plate occurs. It should be recalled at this time that when the plate current through a load resistor is doubled, the power developed in that load is increased four times. Thus, an amplifier, biased as described above, may be made to develop considerable power output with the same plate-heating as compared with one operated as a class "A" amplifier. This is exactly what the new positive-grid tube, illustrated in Fig. A, is designed to do.

Technical Details

The plate current—grid voltage curve of the tube is illustrated in Fig. 2. Note that the plate current at zero bias is very small—

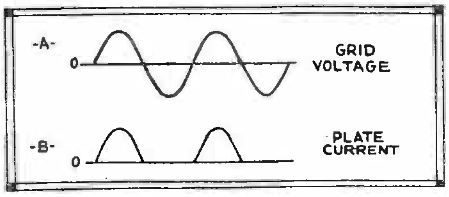

Fig. 1
Curves showing rectifying action of the tube.

for all practical purposes, zero. At A is shown the static, and at B the dynamic, characteristic of the tube. At C is shown the grid-current curve; at high values of applied voltage, it becomes quite appreciable.

To secure an output similar to that at B, Fig. 2, the plate-current cut-off at zero bias must be very sharp. To secure this condition, the tube is constructed with two concentric grids, the inner one being coarse in comparison with the outer one. A diagrammatic arrangement of the elements in the tube is shown in Fig. 3A, and in Fig. 3B are shown the socket connections.

The characteristics of the tube are as follows: Filament voltage, 2.5 volts; filament current, 1.75 amps.; Eg1 and Eg2, zero (both being connected together outside the tube); plate voltage, 300 volts; plate current, nearly zero; plate load, 1250 ohms; undistorted output, 20 watts; maximum peak grid-input voltage, 35 volts; total distortion (including 2nd, 3rd, 4th and 5th harmonics) 10 per cent. As the load impedance is increased to 2500 ohms, the distortion increases to 20 per cent.

Adaptations

This tube is primarily designed for public address work, and when used for such purposes, is designed to be driven by a '45 tube as illustrated in Fig. 4. Normally, the signal voltage appearing across the primary of the output transformer of a '45 tube is about 140 volts (peak). In order to drive the positive-grid tube, which requires a peak voltage of but 35 volts, the audio transformer T1 coupling the two tubes *must be step-down*, and have a ratio of about 4 to 1. The secondary of this transformer must also have a low impedance in order to minimize grid distortion. The output transformer T2, feeding into a dynamic speaker having a voice-coil impedance of 10 ohms, should have a ratio of 11 to 1.

The fact that this tube delivers a high output does not limit its use to public address work This usage was designated merely because 20 watts represents a considerable output and is far more than is necessary to obtain good loud-speaker operation For those who still desire to use the tube for radio purposes, it may be stated that a '27, coupled through a 1:1 ratio transformer, may be used. A step-up transformer should not be employed as the voltage delivered to the grid will then exceed the rated value of 35 volts, in which case excessive distortion is bound to result.

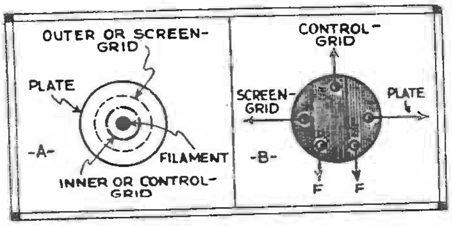

Fig. 3
Socket and element arrangement.

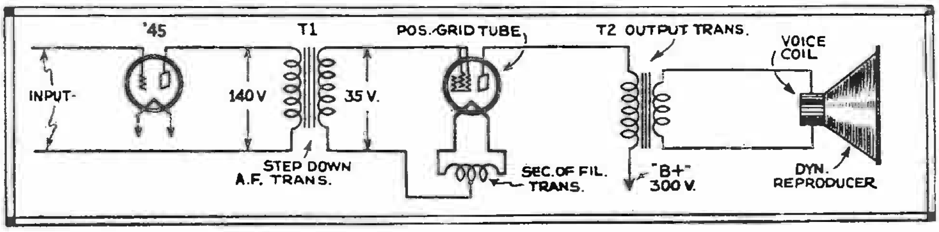

Fig. 4
Schematic circuit of the manner in which the positive-grid tube is to be connected.

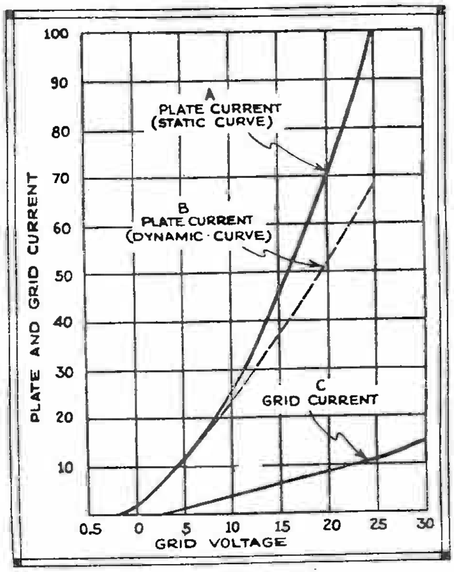

Fig. 2
Static and dynamic curves of the new tube.

The screen-grid is connected to the control-grid externally as indicated in the diagram, but may, for special purposes, be connected in other ways.

Class "B" amplification has, for some unknown reason, been entirely neglected in radio receiving circuits. In transmitting equipment, the harmonics generated are eliminated by means of filters. In receiving circuits, no filters are necessary because the load impedance is adjusted for minimum distortion, in this case 10 per cent with a 1250-ohm load. When this tube becomes available, a new field will be opened to experimenters. The trend in modern design is toward greater output, and the author believes that this may be economically secured only with a tube such as described in this article.

A Receiver for the New Tubes

Because of the unique characteristics of the *variable mu* tube, no band-selector systems will be required; the tuning being accomplished by means of four tuned circuits of normal arrangement.

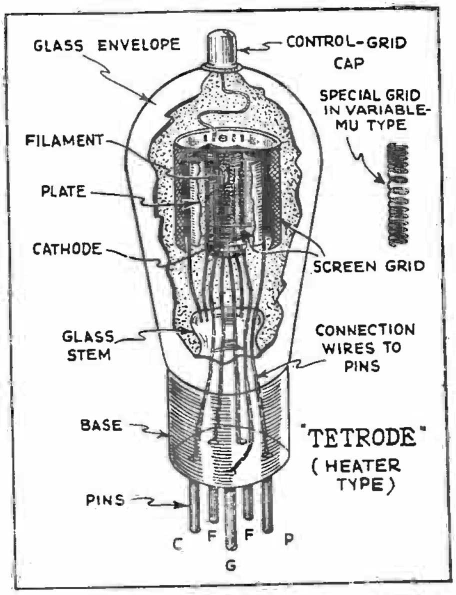

The tetrode with a heated cathode is the popular 224 screen-grid tube. An identical construction is used in the 236. In the 235 variable-mu type the control grid has uneven pitch, as shown.

The "tone-control" in the plate circuit of the output tube may be used as such if desired. Its real purpose is the limitation of the voltage across the output of the Pentode during high frequency passages.

The Variable Mu Tube

A full realization of the wonders accomplished in the development of the 551 tube is difficult without experience of its actual operation. Here is a tube which presents one portion of its characteristic curve to a signal of high strength while, at the same time, accepting a weaker signal on a portion of its curve favorable to amplification: a tube in which the irremediable "electron noise" is so low as to permit the production of receivers of at least twice the sensitivity heretofore deemed the maximum: a tube which does not suffer from "modulation hum" due to indifferent filtration of the R. F. supply voltages.

Volume control is obtained by variation of the biasing potential over a range of from three to fifty volts. This has always been the ideal method of regulating the volume; but, at high bias levels, the '27 and '24 were operated on unfavorable portions of their characteristic curves, and rectification resulting in "cross-talk" was experienced.

The ability of this tube to accept high

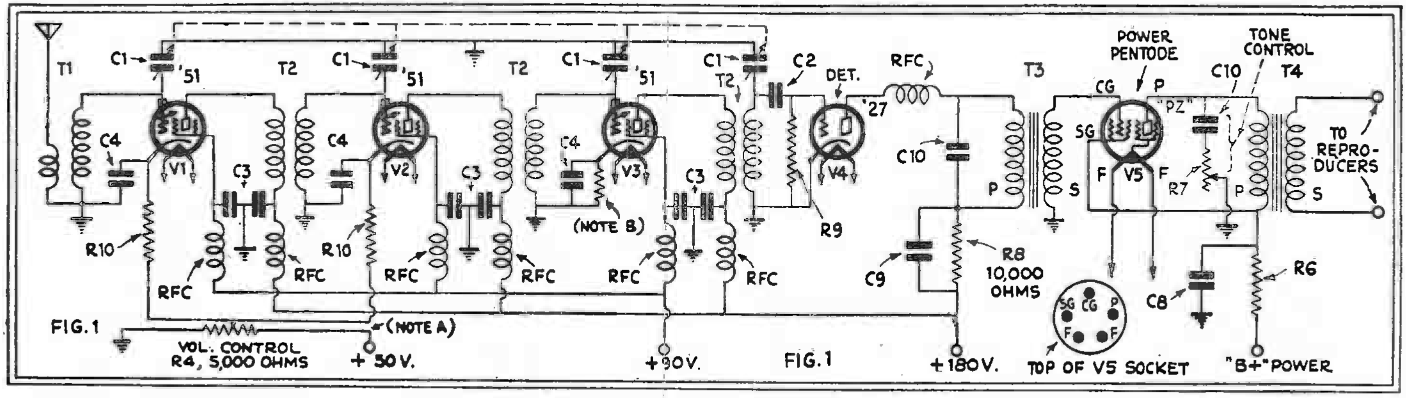

With four tuned circuits, this receiver gives selectivity; while the three variable-mu tubes, controlled by R4, may be operated below the cross-talk level in the face of strong interference. The arrangement of the pentode socket is shown in the small detail at the right.

signal levels without distortion makes the complex, double volume-control a thing of the past and renders the use of band-selectors in tuned R. F. circuits unnecessary. In superheterodyne receivers we are not interested alone in the "numerical" selectivity of a receiver (as determined from the number of tuned circuits and their figures of merit) but must take into consideration the "image-frequency" selectivity as apparent prior to the first detector tube. This might require the use of coupled circuit systems, even with the advantages of the new tube.

The Pentode Output Tube

The advantages of the pentode tube over the three-electrode tube are also manifold. In the beginning, the pentode was condemned not because of its lack of promise but because, while second-harmonic distortion had been brought down to the level required, the distortion due to odd harmonics in the output was above that considered allowable in broadcast reception. The characteristics of the pentode are not even remotely similar to those of the triode, and it has taken some months of research to fit the tube for popular consumption.

The main advantage of the pentode is in its high power sensitivity; that is to say, the grid voltage necessary for maximum undistorted output is much lower than that for the triode having similar characteristics, and with equal power consumption. A comparison of the Arcturus "PZ" pentode with the '45 tube gives some idea of the advantages:

	Power Pentode	*'45 Triode*
Plate Consumption	10 watts	8.5 watts
Plate Voltage	250	250
Grid Bias	16.5 volts	50 volts
Maximum Undistorted Power Output ..	2500 milliwatts	1600 milliwatts
Power Sensitivity .	3	.8

The factor of power sensitivity is taken, as recommended by Ballantine and Cobb, as equal to the square root of the maximum undistorted power output divided by the R. M. S. grid swing required. The pentode is shown as better than the triode by a factor of 3.75; which is to say that the pentode is equivalent to a triode having the same characteristics as the '45, preceded by a stage of undistorted amplification having a gain of 3.75.)

The pentode effects certain simplifications in design, which will be apparent from a study of the schematic circuit. Its optimum load is between seven and eight thousand ohms.

Phonograph Combination

If a phonograph pick-up is desired, it may be connected in by means of a multiple-switch, which must perform the following tasks in changing over:

(a) Short out the current-limiting resistance in the plate circuit of the detector tube;

(b) Switch a suitably-bypassed 2,700-ohm resistor into series with the cathode, for biasing the grid;

(c) Connect the phonograph pickup, or its transformer secondary, between grid and ground of the detector's input circuit.

Referring to Fig. 3, which shows the phono-radio changeover arrangement, it should be noted that in the "phono" position contacts 1 and 3 should close, and 2 should be open. In the radio position 1 and 3 should be open, and 2 should close to short out the biasing resistor R8 and condenser C9.

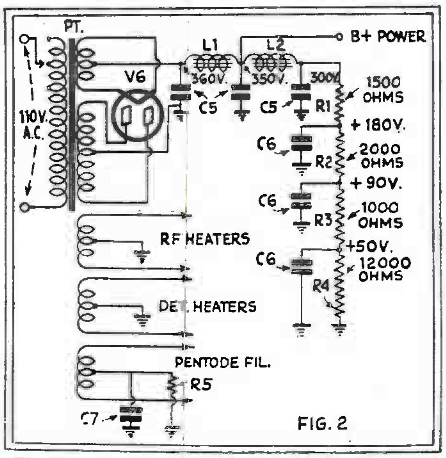

The power unit of the receiver shown below. R4-C6 are shunted across the volume control.

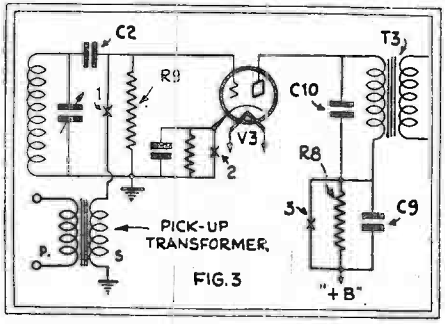

When a phonograph pickup is thus connected to the input of V3, the equivalent of three full stage of audio amplification is obtained.

List of Parts Used

All parts used in the writer's receiver were as specified in the following list:

T1—Hammarlund "AC17" antenna coil;

T2—Hammarlund "SGT 17" R. F. coil;

T3—Amertran "DeLuxe" second-stage transformer;

PT, L1, L2—Amertran "245" power block;

T4—Amertran "115" output transformer, to match dynamic voice coil;

C1—Hammarlund "MQS" four-gang condenser, with "SDW 1" dial;

C2—Aerovox .0001-mfd. mica condenser;

C3—Aerovox 0.1 mf. double unit "No. 461-21";

C4—Aerovox 0.1 mf. single unit, "No. 260";

C5—Aerovox "B-400" block, 2—4—4 mfd.;

C6—Aerovox "B-2" block, three 1-mf. units;

C-7—Aerovox "No. 202," 2-mfd.;

C8—Aerovox "No. 302," 2-mf.;

C9—Aerovox "No. 202" 2-mfd.;

C10—Aerovox .001-mfd. mica condenser;

RFC—Hammarlund "RFC 85" choke;

R1, R2, R3—Electrad "Truvolt D45," tapped to give 1500, 2000 and 1000 ohms;

R4—Electrad 5000-ohm "Royalty" potentiometer, shunted by a 12,000-ohm Electrad "Type B120" resistor;

R5—Electrad "Type B7.5" resistor, adjusted to 540 ohms;

R6—Electrad "Type D22.5" resistor;

R7—Electrad "Royalty Type D" 5000-ohm potentiometer;

R8—Electrad "Type B10" resistor;

R9—Electrad 0.25 megohm leak;

R10—Electrad "2G350" flexible Resistor;

V6—Arcturus "Type 180" rectifier;

V1, V2, V3—Arcturus "Type 551" variable-mu tubes;

V4—Arcturus "Type 127" quick-heater detector tube;

V5—Arcturus "Type PZ" power output pentode.

The operating characteristics of the two new types of tubes utilized in this receiver are given by the manufacturer as follows:

	Power Pentode (Arcturus "PZ")	*Variable Mu Tube (Arcturus "551")*
Heater Voltage	2.5	2.5
Heater Current, amps...	1.5	1.75
Plate volts	250	180
Screen volts	250	90
Plate current, m.a......	32.5	5.5
Screen current, m.a. ...	7.0	less than 2.0
Plate Impedance, ohms..	38,000	300,000
Mutual Conductance. mmhos.	2500	1000
Grid Bias, volts	16.5	3
Grid-plate, Capacity mmfd.	——	.006
Optimum Load, ohms	7—8,000	

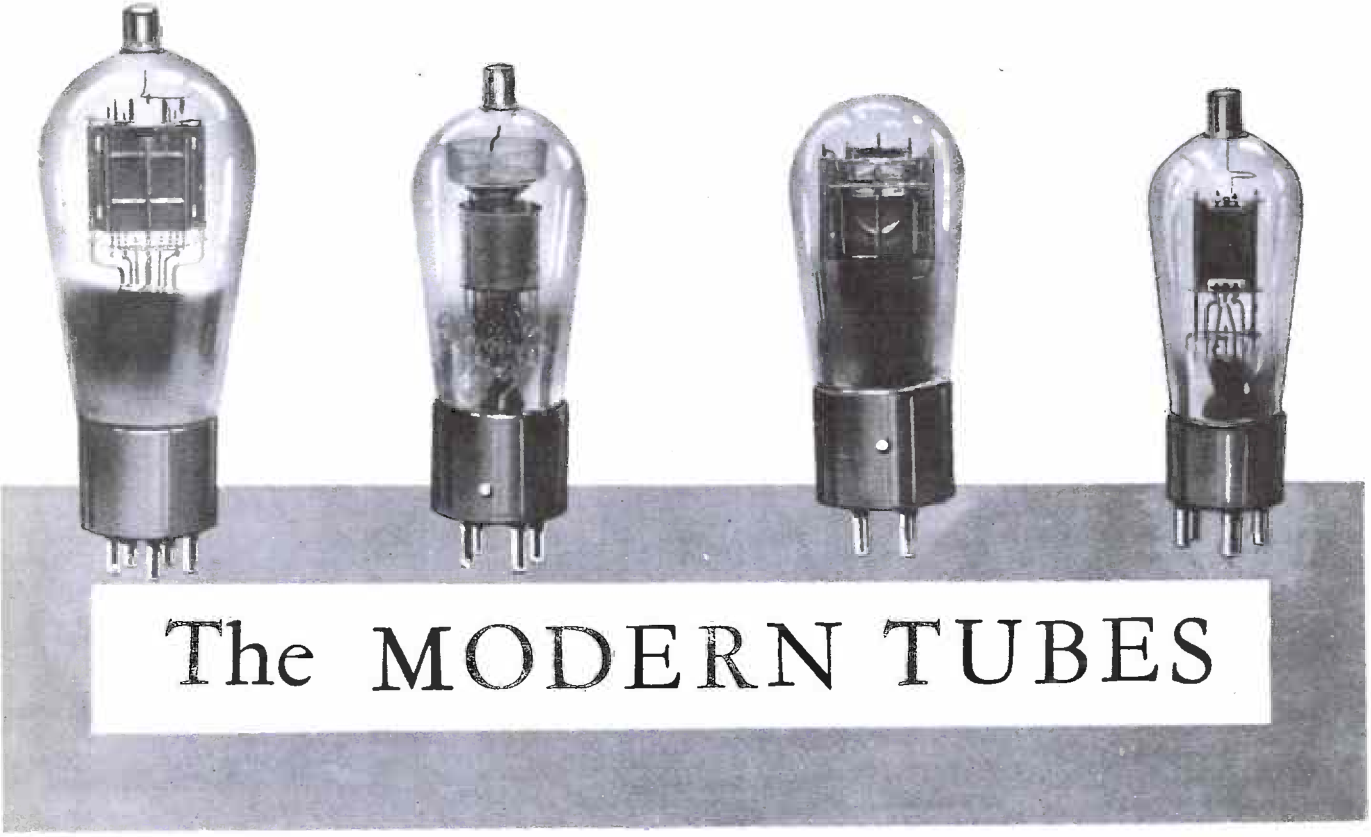

The MODERN TUBES

JUST as this book was being prepared for the press, a number of new tubes were announced to the trade. They will probably be available on the open market by the time the book is printed, so the advance confidential information on them is published herewith for the assistance of Service Men, experimenters, dealers and others who will have occasion to use them.

In some cases no definite type numbers had been assigned at the time the technical characteristics were released. However, the reader will readily identify the tubes from their characteristics when the new numbers are finally established.

A New Type Output Pentode

In Fig. A we have shown a new type of output pentode which is capable of delivering 3.5 watts of undistorted output with a load resistance of 7000 ohms. Probably the unique feature about this tube is the fact that, unlike other output tubes, it has a heater; in other words, it has a cathode emitter which is similar to the '27 type tube. This new feature results in a much lower hum output than has been heretofore possible in power output tubes. For instance, consider Fig. 1.

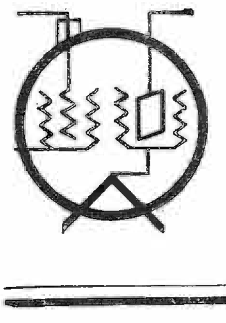

The Pentode tube, with an interior connection putting its third or "Cathode-" grid at cathode potential, gives enormously greater output from the same signal than other tubes and saves a stage.

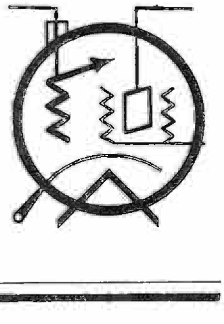

This symbol for the variable-mu tube, the amplification factor of which is varied enormously by its grid, is offered by Radio-Craft *to the radio profession, to fill a need which is now apparent.*

This curve shows the hum-voltage output when the grid and plate-return-leads are not brought to the center tap of the filament. In other words, the '47 type tube has a hum output of one volt when the center tap is but 1.5 percent off center; the new pentode has an output of but one-tenth of a volt with the return leads 1.5 per cent off center. An examination of this latter curve will readily show how quiet this new pentode is expected to be.

Figure 2 shows the relation between plate voltage and plate current. The vertical line at the 250-volt mark is the rated plate voltage of the tube. As with other pentodes, the familiar "bump" at low plate voltages is absent. This, of course, is due to the insertion of the fifth element in the tube. The curves in Fig. 2 are each taken with different values of grid biases; at the rated bias of -16.5 volts, the plate current is seen to be approximately 33 milliamperes.

Figure 3 is a very interesting curve; it shows the relation between the load resistance and the power output of both the second and third harmonics. The small scale to the right indicates the percent distortion. The second-harmonic output is a minimum with a load resistance of 7000 ohms; it is for this reason alone that the value of 7000-ohms for the load resistance was chosen.

Figure 4 illustrates the variation of amplification factor, mutual conductance, and plate resistance of the tube with various grid biases. As in the other curves, the vertical line indicates the rated bias of this new tube.

It may be well to remark that the curves as given above have been supplied by the manufacturer of the tube.

The following are the characteristics of the tube; heater voltage, 2.5; heater current, 1.75 amperes; plate voltage, 250; screen voltage, 250; grid bias, -16.5; load resistance, 7000 ohms; amplification factor, 100; internal plate-impedance, 31000 ohms; mutual conductance, 3300 micromhos; plate current, 34 ma.; output power, 3.5 watts.

It is seen that the characteristics of this new tube are very similar to that of the '47. In fact, it may directly replace the '47 tube; the only circuit change necessary is the rewiring of the socket as per the diagram, Fig. 5.

The addition of this tube to any receiver will result in a greater power output with less distortion than could be secured with the '47. In fact, the author predicts that this new tube will completely replace its older brother within a short time after it

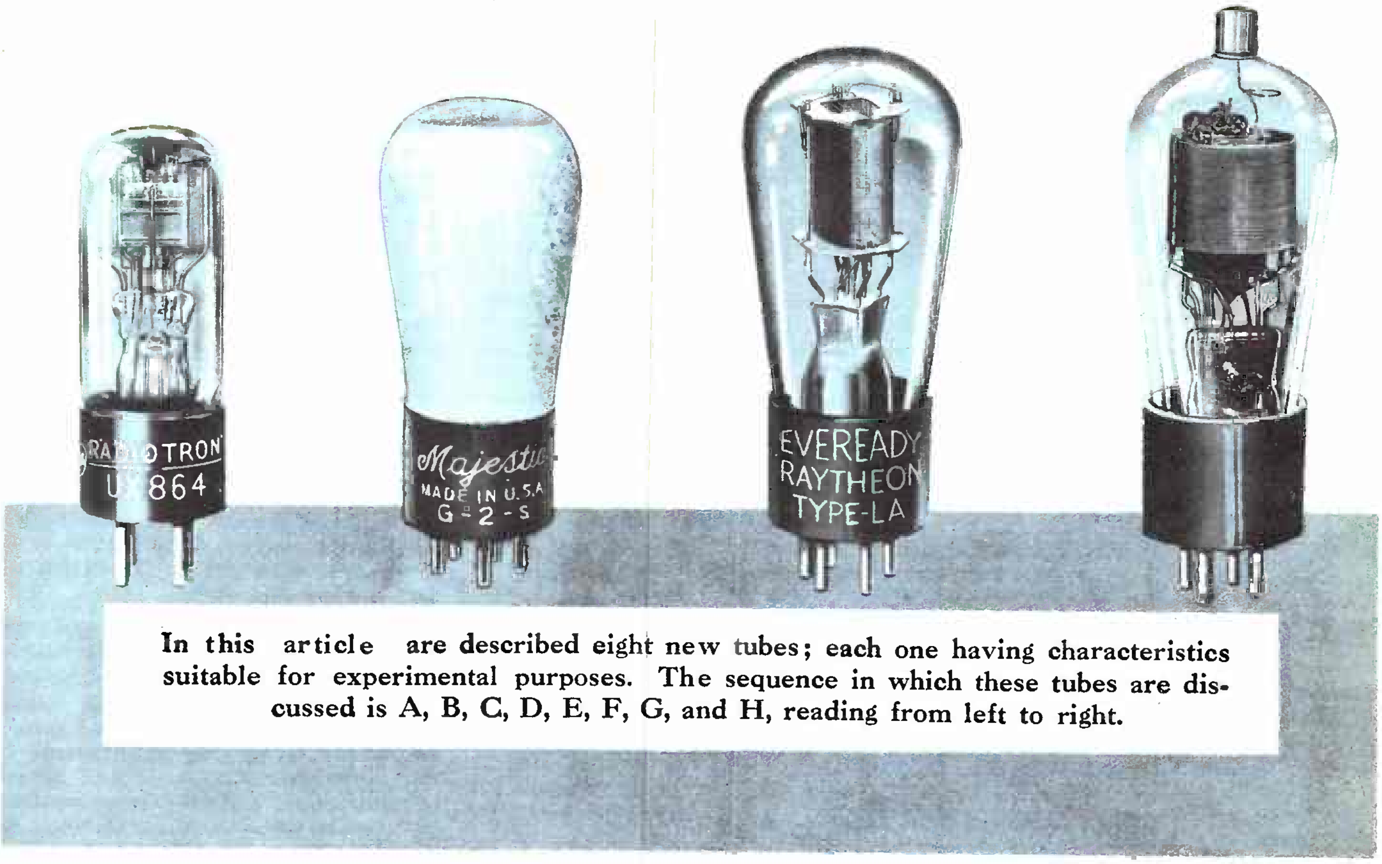

In this article are described eight new tubes; each one having characteristics suitable for experimental purposes. The sequence in which these tubes are discussed is A, B, C, D, E, F, G, and H, reading from left to right.

is obtainable in the open market.

A Combination Oscillator First Detector

Very few people deny the fact that the superheterodyne is the most popular circuit in use today. The only possible objection that one could have to its use is the necessity for having an *additional* (oscillator) tube. While circuits have been designed that have combined the oscillator and first detector, they have not proved very satisfactory, especially when made on a production basis, so that almost every one who has designed such a circuit has eventually changed it so as to use the additional tube.

Figure B shows what the author considers a tube of radically new design—a combination oscillator and first-detector built into a single glass bulb.

The diagram of Fig. 6 shows the rather unique mode of connection. As may be seen, the tube has two plates, a pentode-grid, a screen-grid, a control-grid, a cathode, and a heater. While physically it has seven elements, nevertheless colloquial use will probably change it to a *sextode,* inasmuch as the cathode and the heater may be considered as a single element.

The operation of this tube is not unlike that of the familiar dynatron oscillator. Refer to Fig. 6. The coil L1 and condenser C1 constitute the oscillator tuning circuit; the coil L2 and condenser C2 the secondary circuit of a standard R.F. transformer. Circuits L1 C1 and L2, C2 are detuned by an amount equal to the intermediate frequency. The transformer and condensers shown within the dotted outline to the right of the diagram is the first I.F. transformer. For convenience in explaining the operation of this circuit, the elements of the tube have been labeled in the diagram as P1, P2, G1, G2 and K which corresponds to the socket connection given in Fig. 7. All voltages shown in Fig. 6 are obtained from batteries in order to simplify the diagram. The theory of operation, however, is the same when operated from a power unit.

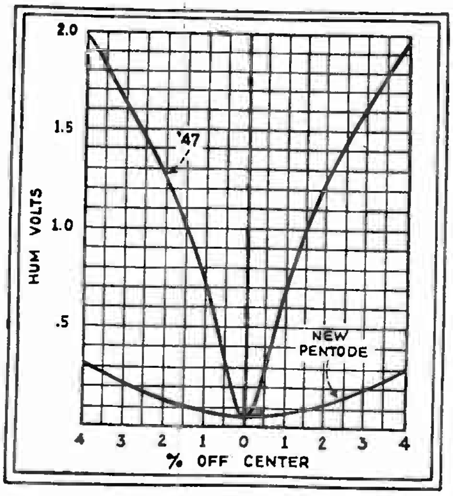

Fig. 1
Hum-volts output of the '47 compared to the new heater-type output-pentode tube, as position of center-tap is varied.

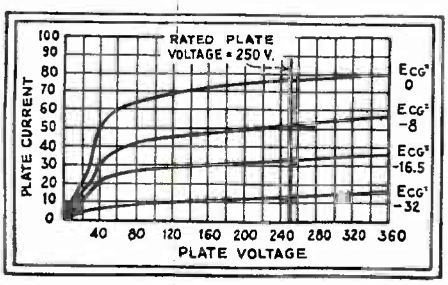

Fig. 2
Curves showing the relation between plate-current and plate-voltage of the new heater-type pentode.

Condensers C3,C4 and C5 are the familiar control-grid, screen-grid and plate bypass condensers. C6 is used as a bypass condenser for the plate-voltage supply of P2.

Referring to Fig. 8, it may be seen that the tube operates on the portion of plate-resistance curve which changes very rapidly. Thus, any change in grid-bias will result in a very large change in plate resistance. Now when a signal is applied to the control-grid (G1), the plate currents of both P1 and P2 vary in accordance with this signal voltage, while at the same time, the plate current of P2 is varying at a frequency determined by the size of L1 and C1. The result is that the change in the control-grid voltage is determined not only by the signal voltage but also by that induced in the grid coil L2 from plate coil L1. Here is where plate P1 comes into use: Its current is the result of both voltages, whose frequency is the *difference* between the two; that is, equal to the intermediate frequency. It is for this reason that the I.F. transformer is connected to P1. Stated in another way, the tube has two plates; through one (P2), the oscillating current flows, and through the other, the resultant of both the signal and the oscillator plate current.

The relation between control-grid voltage and plate current is also shown in the same figure. A peculiar fact, as may be seen by referring to Fig. 9, is that the plate of P2 is at a potential of but 30 volts and that of P1, 250 volts.

This tube has some very interesting possibilities, and it would be well for the ex-

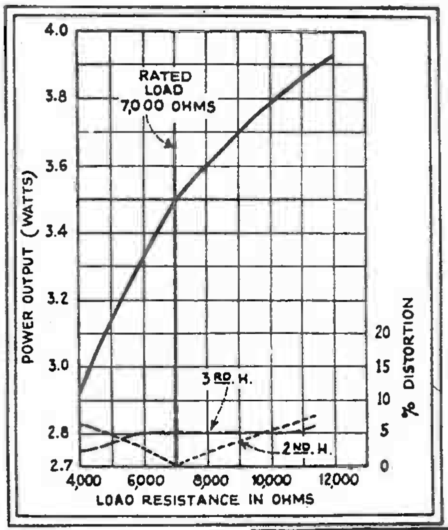

Fig. 3
Power output and per-cent harmonic-distortion curves of the new output pentode.

perimenter and set builder to obtain one and see what can be done with it.

The P. J. 11 Pliotron

A vacuum tube more sensitive than its predecessors in the measurement of minute voltage was announced recently by the vacuum-tube engineering department of the General Electric Company. This new "low noise" vacuum tube, illustrated in Fig. C, is technically designated as the type "P. J. 11 Pliotron," differs particularly from the usual tube in the degree of vacuum that has been attained. In the ordinary tube, the gas pressure is of the order of a millionth of an atmosphere (an atmosphere being 14.7 pounds per square inch); the new tube has been exhausted to a billionth of an atmosphere!

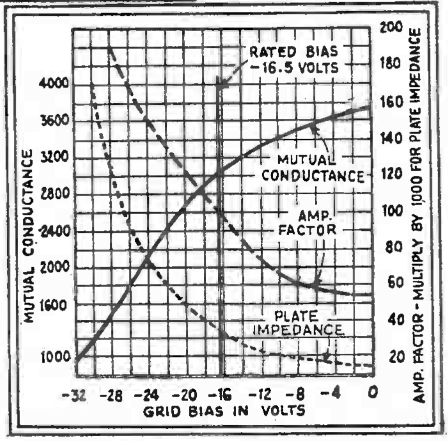

Fig. 4, above.
Variation of amplification factor, mutual conductance, and plate impedance with grid bias.

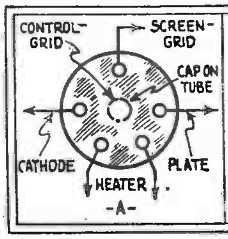

Fig. 5, right.
At the left (A), socket connections of the new heater pentode.

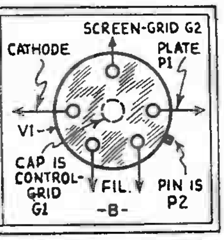

Fig. 7, right.
At the right (B), socket connections of the new oscillator—first-detector.

The "low noise" tube makes it possible to detect voltages of the order of 1/10,000,000 of a volt. It has been possible to do this at radio frequencies for some years, but when attempts were made to amplify voltages whose frequencies were less than 1000 cycles per second, it was found that voltages of less than 1/10,000 of a volt were completely masked by large random disturbances. When these disturbances are made audible by a loudspeaker, they appear as a loud crackling noise. Because of the fact that this new tube reduces this noise between a *hundred and a thousand-fold,* it is possible to measure voltages as small as a *millionth of a volt* and to detect voltages *ten-times smaller at all frequencies* up to about one-million cycles per second.

Laboratory investigations show that random disturbances are caused by any or all such happenings as insulation in or near the electron path, irregular filament emission, gas, positive-ions emitted by the filament, and insulating foreign deposits on grid wires. The construction of this new tube is such as to minimize these disturbances to an extent that will permit the measurement of the small voltage mentioned above.

The characteristics of this new tube are as follows: Filament voltage, 5; filament current, .25-amperes; plate voltage, 135; plate current, .45-ma.; control-grid voltage, -.5; amplification factor, 30; internal plate resistance, 10,000 ohms; mutual conductance, 3000 micromhos; grid-plate capacity, 9.6 mmf.; grid-filament capacity, 4 mmf.; plate-filament capacity, 2.3 mmf. For a resistance coupled amplifier, the following constants should be used: "B" voltage, 180; grid voltage, -3; load resistance, 500,000 ohms. With the above, the plate current will be .1-ma. and the amplification factor 20.

The Wunderlich Tube

There will be announced very shortly a new type of detector tube which is novel, inasmuch as it may be used not only as a second detector but also as an automatic volume-control and amplifier. This tube is illustrated in Fig. D, and the diagram of its connections in Fig. 10.

As may be seen by an inspection of this figure, there is no bias on the tube itself. The coil L1, and capacity C1, is the usual secondary circuit that feeds the second-detector (of course, if the receiver is of the T.R.F. type, the second detector is the only one there is, and consequently the information given regarding this tube is valid for such receivers also). Its theory of operation is relatively simple. Consider Fig. 11. The signal voltage shown as A is impressed across grids G1 and G2 of the tube: one (G1) being positive and the other (G2) negative. The plate current, due to G1, does not rise very much even though the grid is positive because of the unusual shape of the plate-current — grid-voltage curve shown in Fig. 12. The grid G2 being negative causes a large decrease in plate current as shown in C Fig. 11; when the cycle reverses, G1 causes a decrease in plate current while G2 hardly rises at all. The resultant plate current flowing through the resistor R of Fig. 10 is shown at D of Fig. 11. In other words, full-wave rectification is secured, and the voltage drop across this resistor may be taken in order to obtain A.V.C. action. The elements of the grid as labeled in Fig. 10 are connected to the socket as shown in Fig. 13.

This tube was designed by Dr. Wunderlich, and is undergoing production at the present time.

A New Two-Volt Pentode

At this time, tube manufacturers announce a new super-control pentode in the two-volt series for use as an R.F. or I.F. amplifier or as a first detector in superheterodyne circuits. It corresponds to the '35 or '51 in the A.C. series and the '39 (which is described *on page* 178)

The characteristics of this new tube (which is designated as the '34) are as follows: Filament potential, 2 volts D.C.; filament current, .06-ampere; plate voltage, 180 (max.); screen-grid voltage 67.5 (max.); control-grid voltage, -3; plate current, 2.8 ma.; screen-grid current, 1 ma.; internal plate-resistance, 1,000,000 ohms; amplification factor, 620; mutual conductance, 620 micromhos.

This tube is ideally suited to short-wave use, especially for portable receivers. When used with the '32 screen-grid tube as a detector, and a '33 tube as an output tube, a higher degree of sensitivity and volume are obtainable.

The socket connections of this tube, as shown in Fig. 14. Fig. 15, shows the control-grid voltage—plate-current curve of the tube and also the mutual conductance curve. Fig. 16 shows a family of plate-current—plate voltage curves. See Fig. H.

A Detector-Amplifier

As the sixth tube on the list we present a new detector-amplifier designated

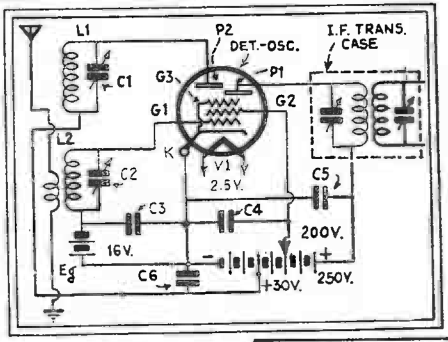

Fig. 6, left.
Diagram of connections of the oscillator—first-detector.

Fig. 8, below.
Variation of negative plate - resistance and plate current with grid voltage for the oscillator—first-detector tube.

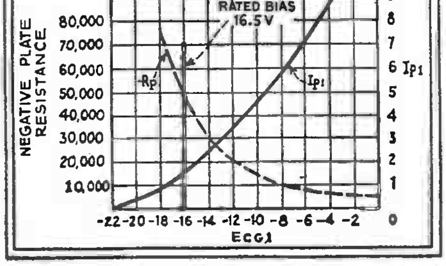

as the '64. It is designated as a three-electrode tube of general-purpose type construction for use under conditions where freedom from microphonic disturbances is required. It is specially applicable as a detector-amplifier or oscillator to battery-operated equipment which may be subjected to either impact or continual vibration. This tube is illustrated in Fig. E and has the following ratings and characteristics: Filament voltage, 1.1 (D.C.); filament current, .25-ampere; plate potential, 90 volts (max.); grid voltage, -4.5; plate current, 2.9 ma.; amplification factor, 8.2; internal plate-resistance, 13500 ohms; mutual conductance, 610 micromhos; plate-grid capacity, 2.3 mmf.; grid-filament capacity, 5.4 mmf.; plate-filament capacity, 3.5 mmf.

The "G-2S" Duodiode

For several years past, the detector-circuit of the radio receiver has received less technical attention than any other circuit from the standpoint of fidelity and overload characteristics.

The earliest type of vacuum-tube detector—the diode—consisting simply of a thermionic cathode and a plate, was discarded chiefly because of its lack of gain; or, in other words, due to the fact that it was not particularly sensitive. It has become increasingly more apparent, during the last few years, that the two-element tube, *or diode,* has several advantages as a detector which more than compensate for its low gain and lack of sensitivity, and several modern circuits have appeared in which the usual *triode,* or three-element tube with two of the elements electrically connected, have been used as a diode detector. It is well known that it is practically impossible to overload such a detector, since it has the ability to handle any amount of power up to the point of destruction of the tube itself without overload distortion. The circuits associated with this use have frequency characteristics which are inherently better adapted to detectors than are the common detectors in use today. In fact, the diode detector is often known as the "linear detector" as contrasted with the more usual "square-law" type.

The advantages of "push-pull" operation are well understood in the radio art today. The great advantage of push-pull lies in the fact that this mode of operation automatically cancels out the objectionable even harmonics.

Fig. 9, below.
Plate-voltage — plate-current of the detector-oscillator.

Fig. 10, right.
Circuit diagram of the new detector. Condensers C2 may be made equal to .00025-mf.

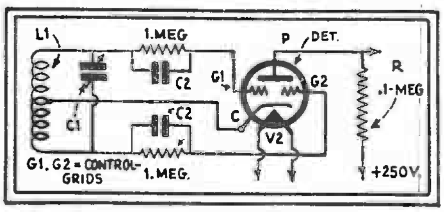

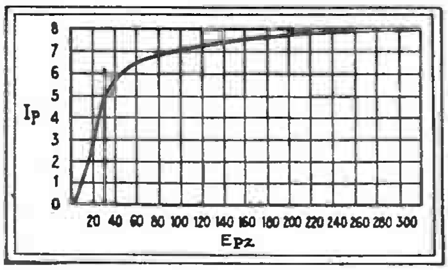

It has remained for Grigsby-Grunow engineers to incorporate in an entirely new tube and a new circuit, the combination of these two developments, that of the diode or linear detector, and at the same time the push-pull operation.

The "G-2S" is constructed with a standard heater type cathode operating at a heater terminal potential of 2.5 volts and a heater current of 1.75 amperes (average). It utilizes two small plates, concentric with the cathode, with a spacing of about one millimeter between them at the center of the cathode. The two plate leads are brought out separately to the standard plate and grid prongs of a standard five-prong base. The tube operates in Majestic circuits with no D.C. plate voltage, only the radio- or intermediate-frequency signal being impressed on the plates.

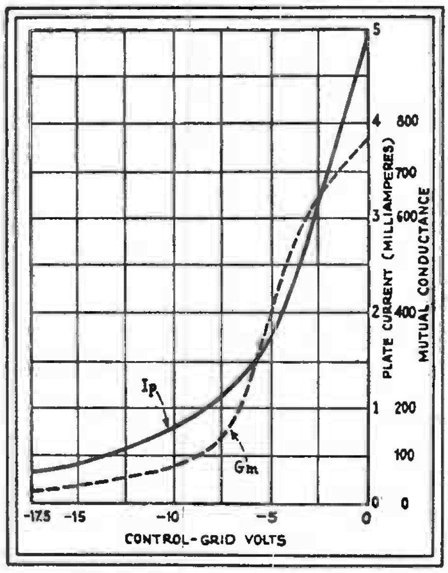

Fig. 15

Curves showing the variation of plate-current and mutual conductance with grid-bias. The former is represented by the solid and the latter by the dotted curve. It should be noted that with the rated grid voltage of —3 volts, both the plate current and mutual conductance vary considerably with grid bias. This tube cannot be used in the output stage.

An important feature of the "G-2S," when operated under these conditions, lies in the fact that an extremely long life may be expected. At the present time, it is impossible to say what the actual life may be, but it is certainly safe to say that it will be far in excess of any of the commercial triodes or tetrodes now standard in the industry.

The information given above is reproduced with the courtesy of Dr. C. Marvin Blackburn of the Grigsby-Grunow Co. A photograph of the tube is reproduced in Fig. F.

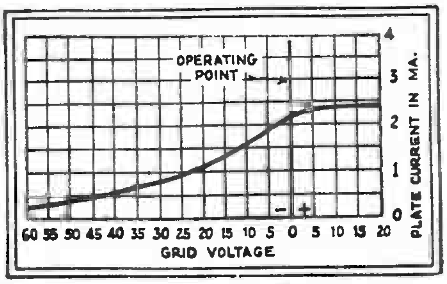

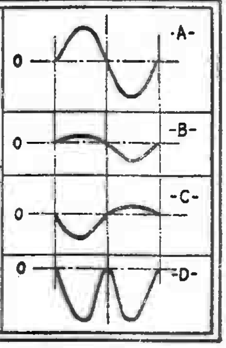

Fig. 11, left.
Action of the detector tube.

Fig. 12, above.
Plate-voltage — plate-current curve of the new detector.

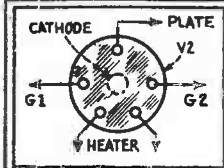

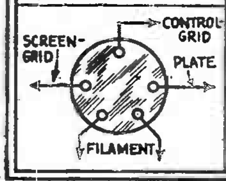

Fig. 13, upper left.
Socket connections of the detector tube.

Fig. 14, lower left.
Socket connections of the '34.

A New Output Pentode for Automobile Receivers

One of the most important problems in automobile receivers is that of supplying sufficient audio output. The signal level should be high enough so that driving noises will not interfere. The first sets employed fairly sensitive magnetic speakers so that an output of a few-hundred milliwatts was sufficient. However, with the recent trend to small dynamic speakers of poor efficiency, the power tubes are required to give a much higher output.

The plate-supply power is very limited. Dry batteries of 135- and later of 180-volts have been generally used as "B" supply. Also the "B" eliminators introduced recently are designed to give only 30-35 ma., because they operate on the car battery already loaded up to maximum capacity. Allowing about 10 ma. for the other tubes in the set, this leaves a maximum of 25 ma. for the output tubes. After subtracting the bias voltage, about 4 watts "B" power remain and must be used economically. It is easy to see that 2 watts of audio power is the highest possible output under these conditions.

Another requirement imposed on the output tubes as well as on all the other tubes in the set is that of maximum sensitivity. Conventional triodes are, therefore, practically eliminated, pentodes being far superior in this respect.

There are some tubes for this purpose on the market already; the '38, for instance, having been designed especially for automobile receiver operation, has proven quite satisfactory. In some cases, a tube with higher power output and power sensitivity is desirable. The plate dissipation, however, at 165 volts on the plate is rather high for the size of the tube.

The "33" would be quite suitable for this application in some respects. However, the low-wattage 2-volt filament in this tube is not rugged enough to stand the rough treatment of an automobile tube, nor would it give good life performance with the high current drain at 165 volts. Its power sensitivity is somewhat better than that of the '33.

A new tube called "ER-LA" has been designed to meet the very severe requirements of automobile output-tubes, outlined above, combining the advantages of the '47 and '33 with the filament rating of the '38 and has proven very suitable for tnis service.

A filament type had been selected because of the better mutual conductance obtainable. Previous experiences with '71A and '21A tubes had proven that a coated filament of similar rating may be used successfully in automobile receivers.

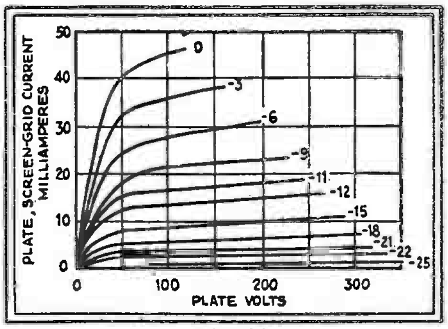

Fig. 16

The rating and characteristics of the ER-LA are as follows: Filament voltage, 6.3 (D.C.); filament current, .30-ampere; plate and screen-grid voltage, 135 to 165 volts (max.); control-grid voltage -9 to -11 volts; plate current, 12 to 17 ma.; screen-grid current, 2.5 to 3.5 ma.; amplification factor, 100.; mutual conductance. 1900 to 2100 micromhos; power output 700 to 1200 milliwatts; load impedance, 9500 to 8000 ohms. overall dimensions: Length, 4-11/16 inches; diameter 1-13/16 inches; base, 5 prong.

It was found that the most economical and distortionless operating conditions resulted from the use of two tubes in push-pull with a self-bias higher than normal (class B amplifier) though the *total* power is somewhat less than from two tubes with normal bias. Two equal tubes will balance their even harmonic distortion due to the push-pull arrangement. By selecting proper values of bias resistor and load impedance, the curvature of the dynamic (plate-current—grid-voltage) curves will balance also, and the third-harmonic distortion disappears much the same way as the second-harmonic does in a single pentode. The self-bias eliminates a difficulty usually encountered in class B amplifiers; the plate-current fluctuations are not very much higher than in ordinary class A amplifier.

The distortion balance is maintained with all input voltages up to the value at which grid-current starts. It wil be noted that the "ER-LA," under these conditions, gives much better sensitivity than the '38 and approximately the same power as a '47. Remarkable under these conditions is the value of 70 percent for the efficiency of the plate circuit of the "ER-LA," not counting the screen-grid current and grid bias losses. Taking these into account, the efficiency is of the order of 45 percent. These values compare favorably with plate circuit efficiencies of 40 to 45 percent in pentodes under normal operating conditions.

The Type 41 and the Mercury Vapor Rectifier

The 41 A.C.-D.C. Output Pentode

Figure A illustrates a new A.C.-D.C. Output Pentode, which is capable of delivering 1.2 watts of undistorted power output. As may easily be seen, the tube uses the new six-prong socket which is described elsewhere in this issue, has a black cylindrical plate and is designed mainly for automotive use.

Previous types of automotive tubes, although equipped with heaters, were unsuitable for A.C. operation. This has rather limited their use to receivers employing D.C. for the filament supply, as a consequence, they have not been used extensively. This new tube is certainly a step forward in the right direction; it may be used with either an A.C. or D.C. filament supply insuring at the same time a minimum of hum in the output.

Figure 1 shows a family of plate voltage—plate current curves of this new tube. A load-line of 11,000 ohms is drawn through the operating point as shown in the same figure. This line shows that if a resistance of 11,000 ohms is connected in the plate circuit of the tube, a "B" potential of approximately 360 volts will be required in order to secure the rated voltage of 167.5 on the plate. As in all pentodes, the characteristic dip in these curves are missing due to the action of the suppressor grid.

As stated above, a six-prong base is used; socket connections are shown in Fig. 2. As in other pentodes, the screen-grid is connected directly to the same "B" supply point used for the plate circuit. The characteristics of this tube should make it especially adaptable for short-wave receivers because of its low grid plate capacity—.5-mmf. The characteristics of this tube are as follows: Filament voltage, 6.3 A.C. or D.C.; filament current, .75-ampere; grid-plate capacity, .5-mmf; input capacity, .75-mmf; plate-cathode capacity, 8.6 mmf; grid bias,—12.5 volts; plate potential, 167.5 volts; amplification factor, 215; internal plate impedance, 120,000 ohms; mutual conductance, 1800 micromhos; plate current, 16.5 ma.; screen-grid current, 2.5 ma.; load impedance, 11,000 ohms; maximum undistorted output, 1.2 watts.

An interesting set of curves is shown in Fig. 3. They show the variation between power output and distortion as the load impedance is varied. The dotted set of curves show the above variation with a control-grid bias of -10 and a plate and screen-grid voltage of 125. The solid lines show the same variation with the rated constants applied, that is, control-grid voltage -12.5 and plate and screen-grid voltages 167.5. From this latter set of curves it can be seen that maximum power output is secured when the second harmonic distortion is a minimum.

For those who require A.C.-D.C. receivers, this tube should be of invaluable assistance in solving some of the problems which arise in connection with the design and construction in such receivers.

New Large Mercury Vapor Rectifier

For those engaged in the construction and installation of public address equipment, the problem of securing a rectifier tube capable of delivering the required power output has been met by the simple expedient of using at least two type '81 tubes, especially when over 300 volts D.C. is required.

To those engaged in this field of endeavor, the tube that is now being announced will prove a "godsend" for we now have available for use a full-wave rectifier capable of supplying 750 volts at 250 ma. The connections and uses of this tube are similar to any full wave rectifier and consequently will not be repeated here; but it will merely suffice to outline its characteristics which in turn may easily be applied to current power units.

Filament voltage, 5 volts; filament current, 3 amperes; D.C. output current, 250 ma., maximum; plate voltage (R.M.S.), 750 volts, maximum. It may be well to state that this new mercury vapor rectifier should be used in conjunction with a choke- and condenser-input filter system. The condenser capacity should not exceed 4 mf.

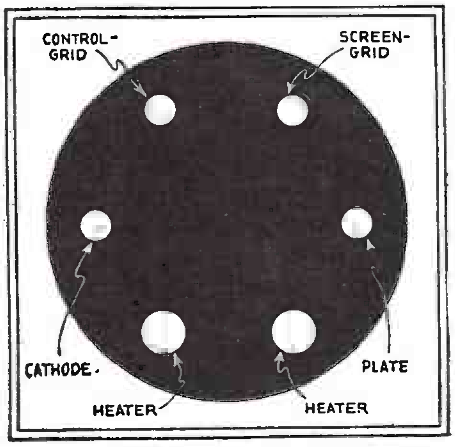

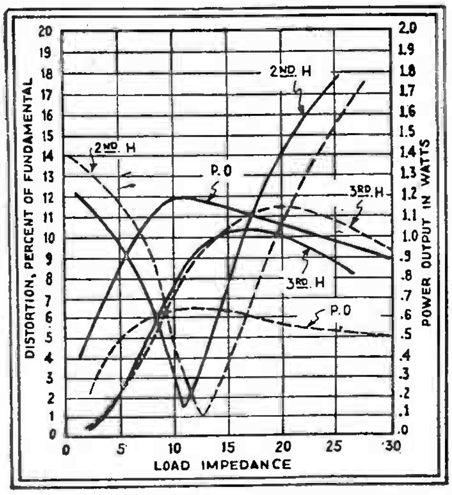

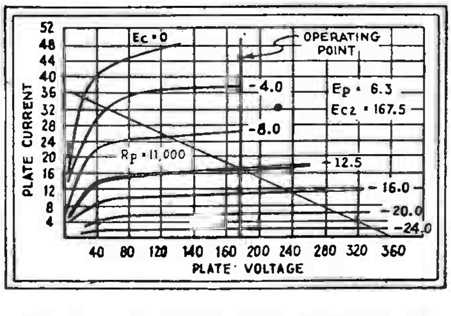

Fig. 1, above. Output curves of the new **41** pentode.

Fig. 2, left. Socket connections of the **41.**

Fig. 3, center. The tube's dynamic characteristics.

The LATEST Radio Tubes

In this Article the Latest Vacuum Tubes on the Market at the Time of this Publication are Described. Service Men Who Desire to Keep Abreast of the Latest Developments Should Read this Section Carefully.

Fig. A
Photograph of the new general-purpose pentode.

"VARIETY is the spice of life." The man who was genius enough to originate the above expression certainly must have had the 1932 radio-tube field in mind when he thought of the adage. Just when and where these new tubes are to be used and to which junk heap the "old" ones are to be relegated, remains to be seen.

We have but one consolation, and that is the fact that the tubes illustrated here are merely *variations* of existing models. In the February issue of RADIO-CRAFT there was discussed a new R.F. variable-mu pentode. The tube as described was originally designed for automotive work, and for that reason the tube shown in Fig. A was designed. It is a pentode (not variable-mu) and is suitable for detection and amplification in both A.F. and R.F. circuits. In all probability it will replace the '24 which is now used so extensively.

In the following paragraphs, there will be described the characteristics of this new general-purpose pentode.

Technical Data

Figure 1 illustrates a family of plate voltage—plate current curves of the new tube. They are similar to those of the '24 except that the "dip" is removed by the addition of the fifth element. In Fig. 2 are shown control-grid voltage—plate and screen current curves. The sharp rise makes them suitable for detection. Last but not least, we have, in Fig. 3, curves showing the variation of amplification factor, mutual conductance and plate resistance with control-grid volts.

The smooth variation of the constants of this tube clearly indicate the advances made in tube design during the past few years. It is a wonder that such a tube was not brought out some years ago. We eagerly await the reception that this tube is sure to cause.

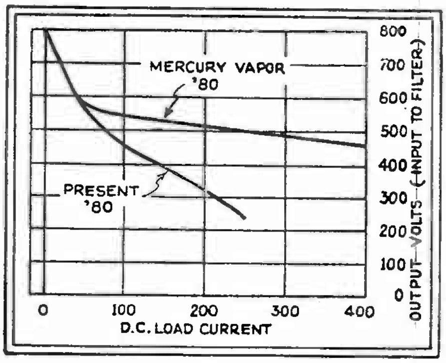

Fig. 4
Voltage-regulation curve of the mercury-vapor '80. Compare this with the curve of the present '80.

Operating Potentials

The operating characteristics of this tube are as follows: Filament potential, 2.5 volts; control-grid potential, -3.0 volts; screen-grid potential, 90 volts; plate potential 250 volts. Filament current, 1.1 amp.; plate current, 4.7 ma.: screen-grid current, 1.25 ma. The amplification factor is 1300, the plate resistance 1.1 megohms, and the mutual conductance 1170 micromhos.

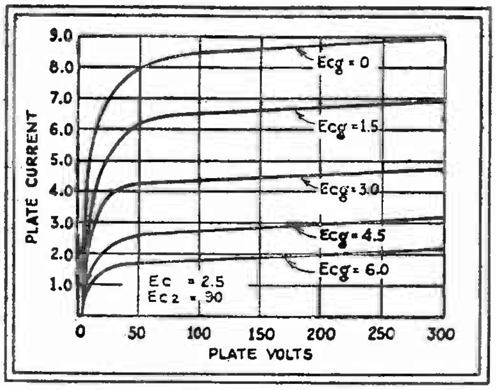

Fig. 1
Family of plate voltage—plate current curves of the new general-purpose pentode.

This tube is especially adaptable for short-wave work since its plate—control-grid capacity is .0005 mmf., its control-grid—filament capacity 3.0 mmf., and its plate—filament capacity 6.8 mmf.

Here's hoping for a long and prosperous life!

The New '27

Our friends, the tube manufacturers, announce a new type '27. The characteristics are the same as the old model except that the filament current is 1. ampere instead of 1.75 amperes, the present value. The plate of the new model is solid, which, it is claimed, considerably reduces hum. This tube, of course, may be used instead of existing models without any changes in circuit design—provided half-way-decent power transformers (low regulation) are used. The glass bulb is very much smaller, which should help midget-receiver manufacturers to some extent. It is shown in Fig. B.

A Mercury-Vapor Rectifier

One of the bad features of present-day rectifiers is their poor regulation. The voltage drop in the tube for reasonable load-current drains is excessive and the variation in output voltage with varying load currents is too great. This feature is especially unsuitable for class B amplifiers where the variation in current drain is great. To obviate the above difficulties, a new mercury-vapor full-wave rectifier has been developed. A photograph of this new tube is shown in Fig. C. It is made to replace the '80 type rectifier. A double-choke filter is recommended with 4-mf. filter sections.

The filament is rated at 2.5 volts at 3.0 amperes. The R.M.S. volts rating per plate is 475—950 volts for the entire tube (it being a full-wave rectifier). The average D.C. output is 125 ma. and the peak output is 400 ma.

The mercury in the tube ionizes with about 15 volts R.M.S. on each plate and, from then on, the internal voltage drop is very small. Fig. 4 shows a regulation curve of the mercury vapor '80 compared with the present type. The change in output voltage (input to the filter) is small. The load current is the D.C. actually supplied by the tube and the size of the glass bulb is the same as the '27 described above. In view of the obvious advantages of this tube, it should be welcomed as a duck welcomes water.

A New Voltage Amplifier

At this writing one leading tube manufacturers announced a new voltage amplifier designated as the type '41.

It is a three-electrode, high-vacuum tube which resembles the '10 in general appearance and filament characteristics but has a high amplification factor. It is designed primarily for use as a voltage amplifier in resistance- or impedance-coupled circuits. In addition to this use, the '41 may also be employed to advantage in amateur transmitters as an oscillator, a crystal-controlled oscillator, a radio-frequency power amplifier, or a frequency doubler.

Characteristics and typical operating conditions for different applications of the '41 are given in the accompanying table. For convenience in presentation, the information has been tabulated in four divisions. The first division, "General Data," includes information common to all applications. The other three divisions, under the headings of "Class A," "Class B," and "Class C" service, cover operating conditions for specific applications. These three classifications are the accepted ones used by radio engineers for broadly identifying tube applications.

Class A Service is employed in the operation of well-designed audio-frequency and radio-frequency amplifiers of radio receivers. For this use, fidelity of signal reproduction is of prime importance. However, fidelity is obtained at the expense of power output and at relatively low efficiency. The '41 as a Class A amplifier, is operated under such conditions that its dynamic characteristics are essentially linear.

Fig. D
The new '41 amplifier.

Fig. B
The new '27.

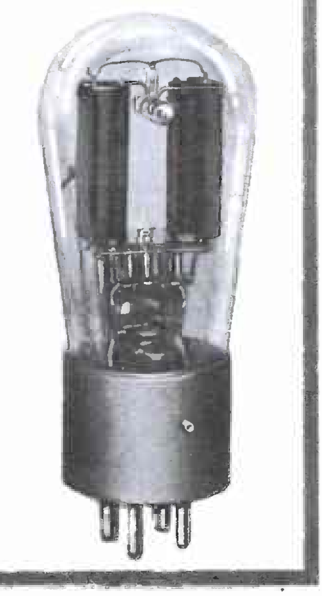

Fig. C
The new mercury-vapor '80.

Class B Service is employed in radio-frequency power amplifiers and in balanced or push-pull modulators of radio telephone transmitters. It is also finding application for power output stages of some of the more recent designs of radio receivers. For these uses, large power output is obtained without distortion and with good efficiency. However, to obtain this large power, a large exciting grid voltage is required. The '41 as a Class B amplifier is operated under such conditions that, with no exciting grid voltage applied to the tube, the plate current is very small. Under these conditions when excitation voltage is applied, only the least negative half of this voltage produces power output.

Class C Service covers those applications where tubes are employed as oscillators or audio-frequency power amplifiers for transmitters. For these uses, very large power output with high efficiency is of primary consideration. However, this high output is obtained at the expense of considerable harmonic distortion. This distortion introduced in the output may be an advantage, as, for example, in the case of frequency doubler circuits. In the case of a transmitting power output stage, the harmonics are removed from the fundamental frequency by means of suitable filters. The '41 as a Class C amplifier is operated under such conditions that the grid is biased well beyond the point at which plate current starts. Under these conditions, when excitation voltage of sufficient magnitude is applied, large peaks of plate current are obtained in the output of the tube.

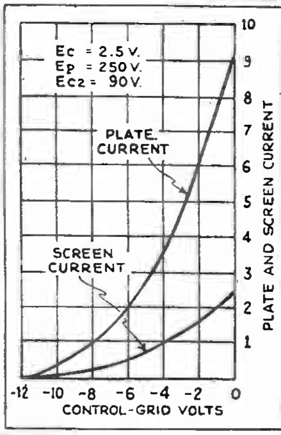

Fig. 2
Characteristics of the pentode.

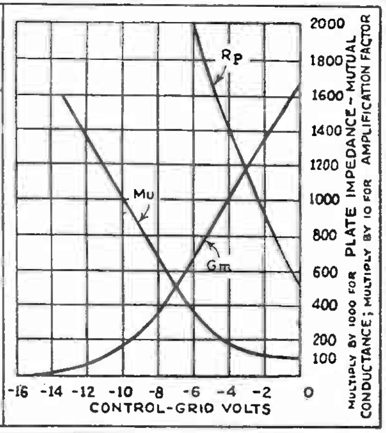

Fig. 3
Curves showing the variation of mu, Gm, and Rp, with control-grid voltage.

Ratings, characteristics and typical operating conditions for the '41 are as follows:

General Data

Filament voltage (A.C. or D.C.), 7.5 volts; filament current, 1.25 amperes; amplification factor, 30. Direct interelectrode capacitances: plate to grid, 8 mmf.; grid to filament, 5 mmf.; plate to filament, 3 mmf.

Class A Service

Maximum operating plate voltage, 425 volts; maximum plate dissipation, 12 watts.

Typical Operation

Plate supply voltage, 425, 1000 volts; grid voltage, -5.8, -9.2 volts; load resistance, 250,000, 250,000 ohms; plate resistance, 63,000, 40,000 ohms; mutual conductance, 450, 750 micromhos; plate current 0.7, 2.2 milliamperes; peak grid swing, 5.8, 9.2 volts; output voltage (5% 2nd harmonic), 126, 225 volts.

Class B Service

Maximum operating plate voltage, 450 volts; maximum D.C. plate current (unmodulated), 50 milliamperes; maximum plate dissipation, 15 watts; maximum R.F. grid current, 5 amperes.

Typical Operation

Plate voltage, 350, 450 volts; grid voltage (approx.), -5, -8 volts; D.C. plate current (unmodulated), 43, 36 milliamperes; peak power output, 12, 16 watts; carrier output, modulation factor 1.0, 3, 4 watts.

Class C Service

Maximum plate dissipation, 15 watts; A.C. (R.M.S.) plate voltage, 450.

Pentodes and Their Use

With values for a D. C. Pentode Receiver and Amplifiers, both Single and Push-Pull

THE student of modern radio may well pause and reflect on the step-by-step progress in the field of electronics. The efforts of manufacturers, to design and make commercially available new types of tubes that offer electrical and economic advantages, are to be lauded.

There is a saying in the trade, "First the tube, then the set"; for engineers and designers of radio receivers and sound systems look to the tube designers for the new devices with which to create the modern radio receiver; and the equipment for its companion fields, such as sound pictures and television. After this step has been taken, there must follow improvement of its associated units.

The output stage of every radio receiver or audio amplifier, until recently, employed a three-element (triode) tube and was designed to deliver large power outputs. Power had to be obtained at a sacrifice of voltage gain. The new pentode, on the contrary, combines large power outputs with an exceptionally high voltage gain.

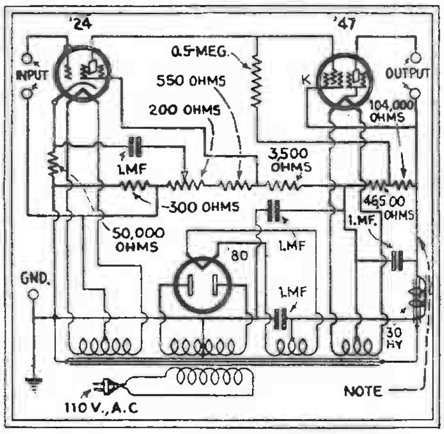

Fig. 2

Note that the plate lead must be clear of other apparatus and wires. The filter must supply 41 milliamps at 435 volts.

A 110-Volt D.C. Pentode Set

The power output and voltage gain of the pentode are so great that care must be employed in the design of the circuits for use with these tubes. The effect of the large plate (signal) current flowing through the biasing resistor should be minimized as much as possible by proper bypassing; as shown in Fig. 1, which is a design for a 110-volt D. C. electric receiver, using a new type of a pentode tube for use at low plate voltages. The capacity of the dry electrolytic bypass condenser C5 is 25 microfarads! The other constants of the various components are given below:

One shielded antenna coil, L1;
Two shielded R.F. coils, L2, L3;
Two R.F. chokes, RFC1, RFC2;
One A.F. choke (A.F. trans. sec.), CH1;
One 30-henry filter choke, CH2;
Two 800-ohm resistors, R2, R3;
One 50,000-ohm volume control, R1;
One 10,000-ohm biasing resistor, R4;
Two 0.5-meg. resistors, R5, R6;
One 1,200-ohm biasing resistor, R7;
One 7,000-ohm resistor, R8;
One 5,000-ohm resistor, R9;
One 3-gang, .00035-mf. variable condenser, C1, C2, C3;
Seven .01-mf. by-pass condensers, C4, C5, C6, C7, C8, C9, C13;
Two 1-mf. by-pass condensers, C10, C11;
One .001-mf. by-pass condenser, C12;
One low-voltage dry-electrolytic condenser, 25-mf., C14;
Two 200-volt filter condensers (one 2-mf.; one 4-mf.), C15, C16;
Four UY tube sockets;
One vernier dial;
Four binding posts;
Two line fuses, F;
One off-on line switch, Sw.

Pentode Direct-Coupled Amplifiers

Much interest attaches to the high gain theoretically obtainable in well-designed "direct-coupled" amplifiers; in which the plate of one tube is directly connected to the control-grid of the following tube.

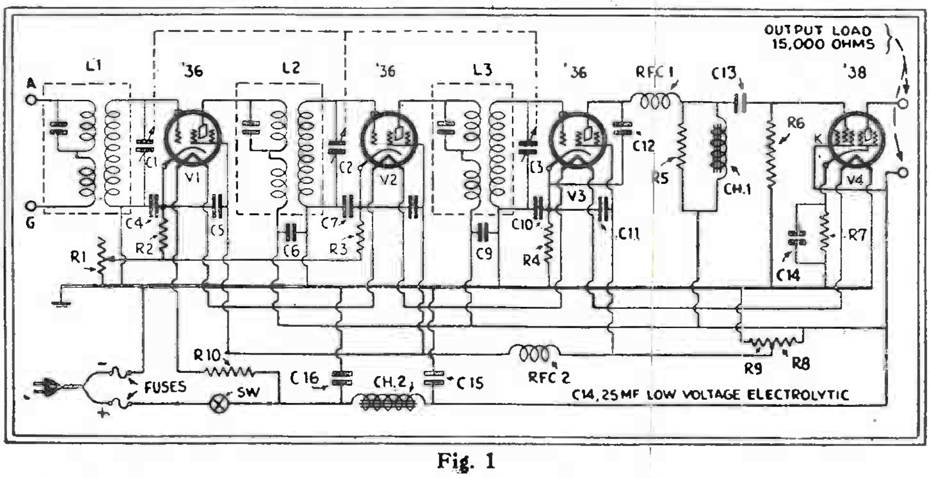

Fig. 1

A receiver designed for operation from a D. C. light line; The ballast resistor R10 must pass 0.3-ampere and drop it to the 25 volts required for the four tubes in series; fortunately, this value is not critical. It is 283 ohms, for a 110-volt line, and 317 ohms at 120 volts.

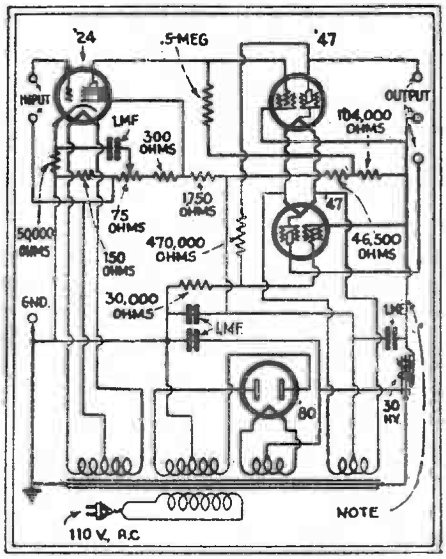

Fig. 3

Design of a five-watt audio amplifier using two A.C. pentodes in a very interesting circuit. Draw, 80 ma. at 435 volts.

The writer believes that the diagram shown in Fig. 2 is the first to appear in print, specifying the new pentode tube for the power audio stage in a direct-coupled amplifier.

Note the specifications as to power requirements; amplifier design lends itself very well to use in conjunction with a microphone or a phonograph pick-up, in addition to its adaptability to the requirements of the audio (or audio and detector) end of standard radio receivers.

All electrical values are given in the diagram. It is presumed that the constructor will use conveniently available instruments; since no make or model numbers are specified in this engineering circuit.

Push-Pull Pentodes

Push-pull operation continues to interest not only the engineer, who is familiar with its principle, but also the customer, who recognizes its effect. Manufacturers are responsive to the opportunity; Crosley, Clarion, Fada, Bosch, Apex, Lyric and Brunswick have announced push-pull pentodes in their latest models.

The writer, therefore, takes pleasure in presenting to the fraternity of constructors what is, probably, the first published diagram of a direct-coupled audio amplifier, using American standard pentodes in push-pull, and serviceable wherever a 5-watt power amplifier of exceptionally fine frequency characteristics is required. (Fig. 3.)

The method of obtaining the phase shift is exceptionally interesting; since the voltage gain of the pentode is 14.7 (approx.) per stage. A tapped resistor, or two resistors in series, connected between plate and the ground or "B—", are of such value that the voltage appearing between the ground and the connection to the opposite tube grid is equal to 1/15th the voltage between the plate and ground. (These resistors must have high resistance values, so that no appreciable direct current flows through them.)

The output is conventional.

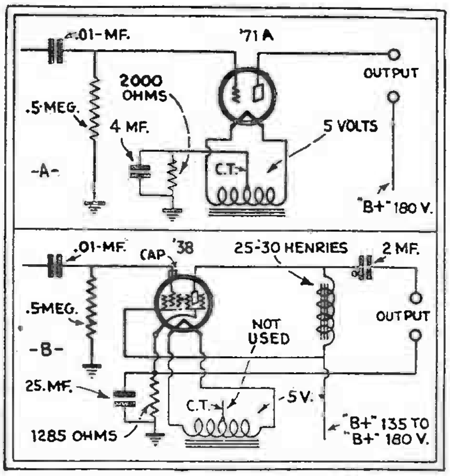

Fig. 6

A single '45 may be replaced by a '38, with lower maximum output, but more volume on weak signals.

It is interesting to note that, with this circuit, and with no more plate voltage than necessary for the '45-type tube, it is possible to obtain a power output of 5 watts with an input signal on the grid of the first pentode of only 16.5 volts (peak). Thus, if the voltage gain of the '24-type screen-grid input stage is at the low order of 100, and the signal on the grid of the first stage only 0.165-volt (peak), the amplifier will be working up to the limits of distortion in the pentode output stage. With larger inputs, the grids would draw current. (The gain in the average direct-coupled amplifier is generally greater than 100; so that the input signal under this condition will be less than the calculated value.)

It is the purpose of this article to analyze the efficiency of the pentode, and to explain the peculiarities which must be taken into consideration in the design of its associated circuits, in order to obtain the desired results of high volume and quality. First, the construction of the tube must be considered.

Pentode Design

In Fig. 4A the elementary electrical circuit is indicated; while Fig. 4B shows the five electrodes in their proper relationship to each other, as seen from above. In dimensions, the A.C. pentode ('47) tube is the same as the '45 type, but it has a five prong base.

The efficiency, with which power variations in the output circuit of any tube are controlled by grid-voltage signal changes, is limited by the introduction of distortion. For undistorted power output, the plate power changes must be symmetrical with the changes in the grid circuit; and the grid input potentials must be of such a value that the peak values do not exceed the bias applied to the grid.

The introduction of the space-charge grid, as in the regular "screen-grid" or '24 tube, nullifies only the effect of the "space-charge" *between the filament and the control-grid;* it materially augments the action of the tube as a voltage amplifier, but offers no advantage in *power* amplifier circuits because of the high value of the "secondary emission." That is to say, electrons striking the plate at a high speed knock out of it additional electrons, which are attracted back to the screen-grid. This electron cloud, the "secondary emission," materially reduces the flow of electrons, thus lowering the plate current.

In the pentode, the outermost or "suppressor" grid between screen-grid and plate is connected to the cathode, which may be the filament inside the tube. Being at the same average potential as the filament, the suppressor-grid has practically no effect on the flow of electrons *from the filament to the plate;* it is, however, negative in respect to the plate. This potential difference (between suppressor-grid and plate) is equal to the instantaneous plate potential; consequently, secondary-emission electrons, leaving the plate under the bombardment of the electrons from the cathode, find that the path back through the suppressor-grid is a difficult one. The greater portion of these electrons return to the plate.

The Pentode as a Replacement

Many Service Men and experimenters will want to replace '71As or '45s by pentodes in standard radio sets and phonograph amplifiers. The first thing to be done is to replace the four-prong UX sockets with those of five-prong UY type. The pentode tubes are so based that the filament terminals are conventional; the control-grid connects to the "G" terminal and the screen-grid to the "K." The plate connection is the same as in the '27 type.

Of course, the filament requirements of the types '45 and '47 tubes are identical. In commercial radio sets with push-pull '71A's, which are to be changed to use pentodes, connect the filaments of two type '47 tubes in series across the 5-volt filament supply, and the biasing resistor (200 ohms) between the center-tap and "B—". The additional filament drain will not materially affect the operation of the power transformer; since these windings are generally under rated; the total filament current consumption would be 1.5 amperes (Fig. 5).

The writer recommends the use of a single type-'38 pentode in place of a single type-'71A tube operating in A.C. sets, (Fig. 6) although the former tube is not designed for A.C. operation. The type '38 tube has its control-grid (like those of the '24 and '35) connected to a cap on the top of the tube; and it plugs into a type UY or 5-prong base; the "K" terminal of which is the cathode, "G" the screen-grid, "P" the plate, and "F, F," the two heater connections.

For the grid-biasing resistor, use a 1,500-ohm wire-wound unit with adjustable contact. In fact, for experimental operation, the usual 1,500-ohm resistor of the '71A may be retained.

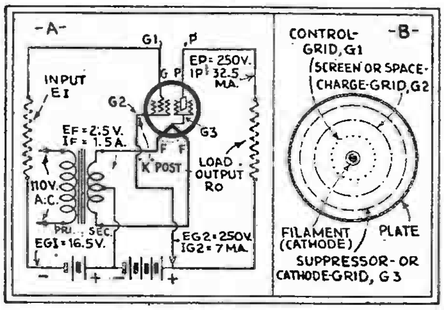

Fig. 4

Left, the fundamental connections of a pentode circuit; right, a cross-section horizontally through the elements.

For battery operation, the type '33 with a suitable filament resistor (say, a 75-ohm rheostat, on 6-volt storage "A" supply), or the type '38 tube connected directly across the battery, may be used. Use the same circuit as shown in Fig. 6B, substituting the 6-volt supply for the output of the A.C. secondary.

Tube data (voltages, current, etc.) are shown on page 759 of the June, 1931 issue of RADIO-CRAFT.

In substituting push-pull '47's for push-pull '71A's, as shown in Fig. 5, the output device may remain the same at a slight loss in power output; or one of the push-pull pentode output transformers designed for this service may be obtained from the manufacturer of the reproducer. Again, this transformer may be obtained from certain manufacturers of pentode output units, as mentioned above.

Here is a circuit (Fig. 7) which should gladden the hearts of tube makers, being a chance for the sale of two type '38 (or "cathode") pentodes. It is an ingenious method of obtaining good matching of the output circuit of two type-'38 tubes used in place of push-pull '71A's; the final circuit gives parallel, instead of push-pull operation of the '38's. Output transformer T will be a standard type '45 unit, offering in this arrangement an approximate match to the two '38's.

Biasing Resistor Values

The value of the biasing resistor for the single '47 or PZ pentode should be, theoretically, 418 ohms. This value is obtained by dividing the proper bias, 16.5 volts, by

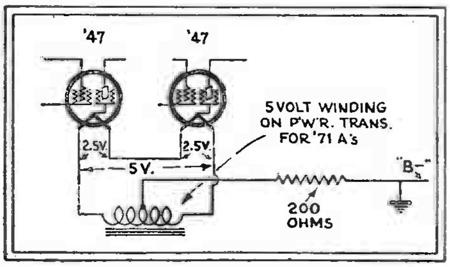

Fig. 5

Push-pull 5-volt tubes are easily replaced by two '47-type pentodes with filaments in series; biased by a 200-ohm resistor.

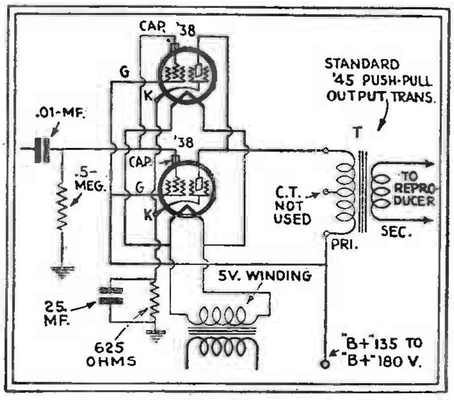

Fig. 7

This unusual circuit will make a good replacement for push-pull '71As; note the '38s are paralleled.

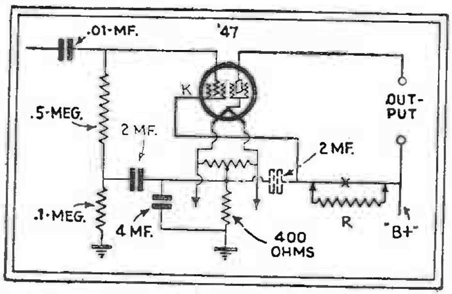

Fig. 8

Observe that the biasing resistor of a single pentode is low in value; and a high bypass capacity is therefore needed, to be an effective shunt.

the combined plate and screen-grid current (32 milliamperes plus 7 milliamperes equals 39 milliamperes). A standard 400-ohm resistor is suitable; because the center-tap resistor across the filament adds slightly to its value. When pentodes are used in push-pull, the biasing resistor should have half the value of that for a single tube, or 200 ohms.

For the '38 tube, a similar calculation indicates a value of 1,285 ohms for a resistor biasing one tube, or 640 for one carrying the current of two tubes.

As the actual voltage gain of the pentode is about 14, compared to approximately 2 in the type '45, it is necessary to use a very high capacity to bypass the biasing resistor, to prevent "degenerative" effects at low audio frequencies.

The great voltage gain causes large signal voltages to appear across the biasing resistor and, since the latter is common to both the plate and the grid circuit, unless it is bypassed by a suitable capacity (in a single- or parallel-tube connection) the operation of the tube will be erratic and the quality of the output poor. (This precaution, however, is not necessary in push-pull arrangements, for reasons which have been explained at length in Mr. Messing's series on the push-pull circuit, previously cited.)

At least 4 mf. of capacity should be used across the biasing resistor, and much more if possible. A new type of electrolytic condenser, with a value of 25 mf., gives a high degree of efficiency at nominal cost and in reasonable space.

Many of the commercial receivers employ a resistor (R, Fig. 8) in series between the high-voltage "B" supply lead and the screen-grid connection of the pentode. The purpose of this resistor is to apply the same "B" voltage to the screen-grid as that which appears on the plate after the drop through the output transformer. In servicing receivers of this type, if the screen-grid resistor has been burned out, simply short-circuit the burnt-out resistor; for the voltage drop in the output transformer is not so great that it seriously interferes with the operation of the tube.

The insertion of a 1- or 2-mf. condenser, between the screen-grid connection and the center-tap on the filament of the pentode tube, (Fig. 8) will generally tend to stabilize the action of the audio end of the set as a whole; it tends to prevent any of the signal voltage, appearing on the screen-grid, from feeding back, through the common power supply, to other portions of the receiver.

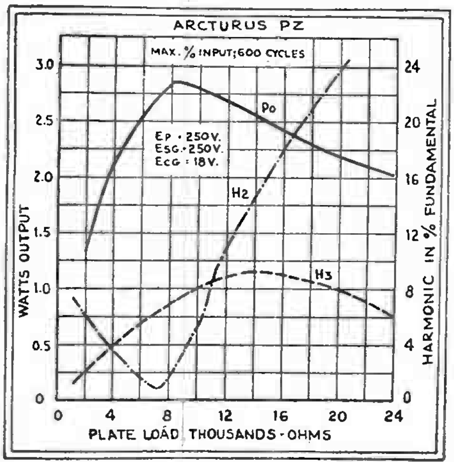

Fig. 9

This curve shows the effect of varying plate loads on a PZ or '47 tube; as regards power output Po, and second- and third-harmonic distortion. H2-H3 respectively.

Some receivers obtain biasing voltages from a voltage divider; in which case the total current consumed by the receiver, plus the bleeder current of the divider, flows through the biasing resistors. Some means must be employed to de-couple the grid circuit of the pentode tube; so that regenerative or degenerative action will not distort the frequency-response characteristic of the audio system.

Choice of Output Coupler

The selection of the output coupling device is a critical one; although quite satisfactory results have been obtained with the standard output transformers and chokes.

The load in the plate circuit for maximum undistorted power output should be 7,500 ohms for the types '47 and '33 tubes; and 15,000 ohms for the type '38. A 30-henry choke at 60 cycles has a reactance of about 10,800 ohms and, as the direct current for the plate of the tube flows through this winding, the reactance will be lowered with the drop in inductance. Thus the 30-henry choke, in conjunction with a 2-mf. condenser, is a fairly satisfactory output coupling.

This method of coupling is quite satisfactory with superselective receivers which display marked tendencies to sideband cutting. Receivers having this characteristic do not deliver large grid-voltage swings at high audio frequencies; thus compensating the increase of output which tends to occur in the pentode at high audio frequencies by reason of the increase in the reactance of the output load with the increase of frequency.

Output transformers should be selected (and now can be obtained from various manufacturers) to couple the pentode to the reproducer. The frequency-response characteristic can be more readily held within definite limits by the use of the moving-coil or dynamic type of reproducer; for the load impedance of the voice coil does not vary to such a wide extent over the audio range, as that of the magnetic type.

In push-pull operation, effecting even-harmonic cancellation in the output transformer, the total load for the types '33 and '47 tubes should be 15,000 ohms, and 30,000 ohms for the type '38 pentode. Other values of impedance may be utilized, calculated for the minimum generation of odd-harmonic distortion, but in the case of the type '38 pentode it is recommended by the writer that two of these tubes be used in *parallel,* instead of push-pull, for the same relative degree of fidelity.

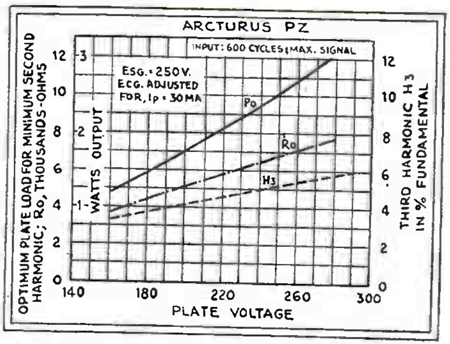

Fig. 10

The line H3 (third-harmonic) shows distortion; the line Ro the best value for the output load of a PZ or '47, at various plate voltages.

Plate Loads and Quality

In usual practice, the three-element tube, or triode, has in its plate circuit an external load equal to twice its internal A.C. plate resistance Rp; this value gives the maximum *undistorted* power output. The external load of the pentode, however, should be about *one-quarter* of its internal resistance Rp. This will be appreciated on examination of Fig. 9, which gives the curves of output wattage and harmonic distortion for various plate loads of the type PZ pentode (which is equivalent to the '47 for practical purposes.)

In this graph, Po represents the fundamental or input signal frequency; H2 the second harmonic of the fundamental, and H3 the third harmonic. The creation of the harmonics in the action of the tube gives rise to distortion; the degree of which, accepted as permissible, limits the "undistorted" output. The rapid drop in H2, as the plate load is increased, reaches a very small value at 7,500 ohms and then increases again until, at a little over 16,000 ohms, it intersects the fundamental at 2.3 watts. The third harmonic H3 increases continuously, until Ro is approximately twice the load impedance for minimum second-harmonic distortion; and beyond that it falls off again.

The use of the pentode in push-pull amplifiers with the proper output transformer will of course reduce the *second* harmonic distortion of the output stage; but *the load must* still be in *proportion* to minimize the *third* harmonic output.

Output transformers or chokes must have some means of regulating the "effective load" in the plate circuit; so that, at the higher audio frequencies, the harmonic distortion will not be augmented by the increase in the impedance of the load with the increase of frequency.

Fig. 10 indicates the undistorted output of the PZ and '47 pentode when operated at various plate voltages; it also shows optimum load impedance for minimum second-harmonic distortion and the degree of the third harmonic present. It is a noteworthy fact that the harmonic distortion does not increase proportionately with the input; but, as the maximum input is approached, the harmonic content of the output increases at a lower rate.

Figuring Pentode Amplification

The formula used in calculating the voltage gain of a pentode is the same as that used for a triode; it may be expressed as follows:

$$mu^1 = \frac{mu\ Z_o}{R_p + Z_o}$$

Where mu¹ is the voltage amplification:

mu is the amplification constant of the pentode;

Z_o is the output impedance, and;

R_p is the plate to filament impedance of the tube.

It may serve to clarify this simple formula, in the mind of the reader, to take an example and work it out.

However, before we are ready to make our calculation of the voltage gain of the pentode, it will be necessary to have available all the operating characteristics of the tube. These are tabulated below, for the "PZ" type.

Filament potential, 2.5 volts;
Filament current, 1.5 amps.;
Plate potential, 250 volts;
Plate current, 32.5 ma.;
Control-grid negative bias, 16.5 volts;
Space-charge-grid potential, 250 volts;
Space-charge-grid current, 7 ma.;
Suppressor— (or "cathode—") grid potential, 0 volts;
Plate impedance, 38,000 ohms;
Transconductance, 2,500 micromhos;
Amplification factor, 95;
Power output, 2.5 watts.

Referring to these constants, and substituting the values in the formula, we derive the following data:

$$mu^1 = \frac{95 \times 7{,}000}{38{,}000 + 7{,}000} = \frac{665{,}000}{45{,}000} =$$

14.79 (volts) gain

We now are prepared to make the following comparison between the triode and the pentode:

	Pentode "PZ"	Triode '45
Voltage gain	14.7	2.3
Input signal (peak) volts	16.5	50.0
Output, watts	2.5	1.4

The specified output from the '45 is that obtained with an external load, in the plate circuit, equal to twice the internal A.C. plate resistance. Both tubes are operated at 250 volts on the plate.

Power Sensitivity

Stuart Ballantine has defined the power sensitivity of a thermionic valve as the ratio:

$$S = \sqrt{Po} \div Eg'$$

where S is the Power Sensitivity;
Po is the power delivered to the load;
Eg' is the R.M.S. value of the A.C. sinusoidal voltage.

A comparison of the "power sensitivity" S of the new pentode with various modern power tube is given, as follows: it will be seen how high the figure for the pentode is.

Tube	Ep	Eg'	Po	S
'12A	157.5	10.5	.195	.0594
'71A	180.0	40.5	.700	.0292
'45	250.0	50.0	1.600	.0358
'47 or PZ	250.0	16.5	2.500	.1360
'50	450.0	84.0	4.050	.0239

The pentode, while not an ideal tube, offers many practical advantages, especially in the small receiver; the outstanding advantage being greater volume with reasonable tone quality.

COUPLING DEVICES

The calculation of the required load in the plate circuit of a pentode, for maximum undistorted output, is governed by the degree of second-harmonic distortion permissible.

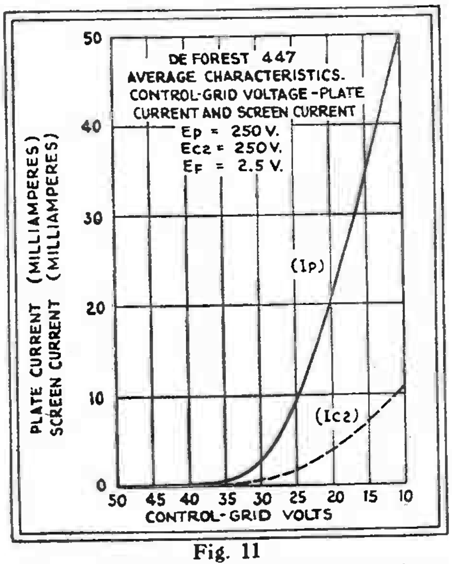

Fig. 11

Observe the steep "slope" of the Eg-Ip characteristic, showing the high mutual conductance of the pentode.

Push-pull connections, because of their effect of even-harmonic cancellation, do not offer the same problem; but it is still advisable to have a condition for minimum second-harmonic distortion, since this offers a reasonable value of plate load for a practical third-harmonic minimum.

The third harmonic, in either push-pull or straight circuits having a load in the plate circuit designed for minimum second-harmonic distortion, will equal about 0.15-watt, with a fundamental output of 2.6 watts, or 6% (third-harmonic output in per cent. of fundamental).

This exceeds the permissible RMA rating but, strangely enough, has the advantage of giving more power to musical overtones, which occur at the higher audio frequencies; and it is beneficial in so-called "sideband-cutting" R.F. amplifiers.

Reference has been made to the fact that the load in the plate circuit of a pentode should be about one-fourth of the plate resistance, for minimum harmonic distortion; and that, because of the high plate impedance, the maximum voltage gain, indicated by the amplification factor, cannot be attained.

If the conventional load in the plate circuit (twice the plate resistance) could be used in the case of the pentode, the voltage gain would be approximately 63; but, under the limitations imposed by the inductive load, we find that our voltage gain is less than 15!

How these tubes with screens build up our hopes, and then break them down again!

Bass Reproduction

Many experimenters hearing pentode-equipped sets for the first time are surprised that the tubes are capable of bass-note reproduction. Perhaps we should say that the higher audio frequencies are not accentuated as much as would be expected at first thought.

As the increase of frequency causes the effective load in the plate circuit to increase, so are the capacities of the load and tube reflected back to the input circuit; and this, in turn, tends to limit the amplitude of the higher audio frequencies (See Fig15). This input capacity C may vary from about 4 to as much as 60 mmf.; depending upon

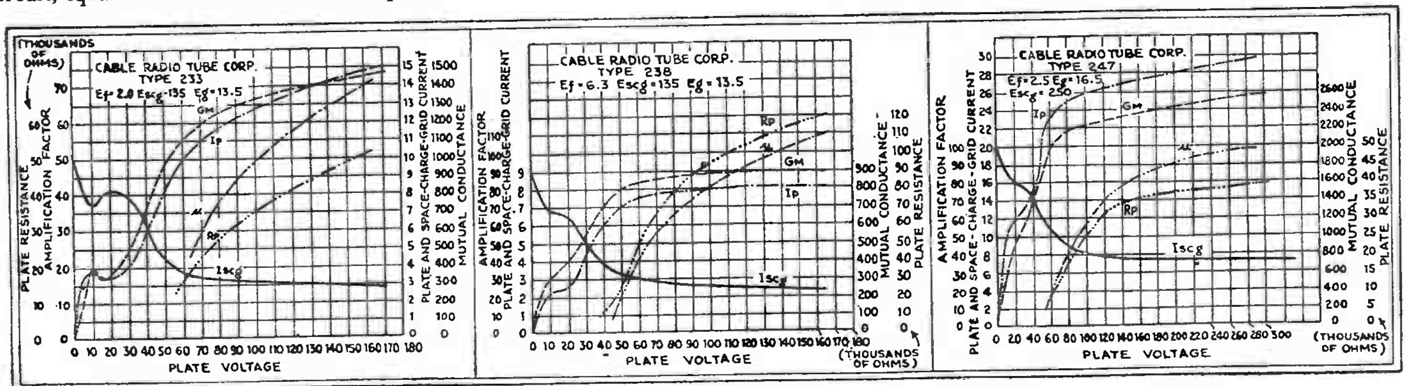

Fig. 12 Fig. 13 Fig. 14

The three standard types of pentodes, now available in the American market, have differing characteristics, yet their curves exhibit a family resemblance at different values. These curves, plotted for the "Speed" tubes, will be informative to the technician who will study them carefully, and compare them with the corresponding characteristics of other power tubes.

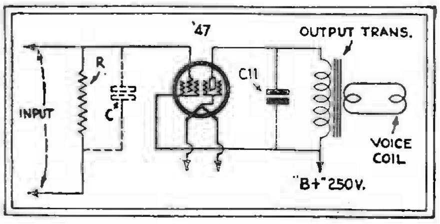

Fig. 15
The added grid-filament capacity C is created, in tube operation, by the "reflection" of the plate load back into the input

the tube and plate-load factors, and the effect of the change in frequency of the signal on the grid.

Output transformers for coupling pentodes to dynamic reproducers are available and work quite well when their primaries are shunted with suitable capacities to limit their impedance at the higher audio frequencies.

The best results will be obtained from pentodes when they are made to work into dynamic reproducers. This is due to the small variation of the voice-coil's impedance over the audio-frequency band. This condition of constant secondary impedance is reflected in the primary, and appears as a primary load which tends to make the primary impedance more constant.

The inductive value of the load should be 7,500 ohms (for the types '33 and '47 tubes), at some low audio frequency, depending upon the design of the reproducer. An average value of 100 cycles should be quite satisfactory; and is approximately equivalent to the figure for an ohmic resistance load as given in tube tables.

Output Transformer Values

For these conditions the primary of the output transformer should have an inductance of about 12½ henries, with a direct current of 32.5 ma. flowing through its windings.

The value of the shunt condenser should be such as to bring the effective load impedance, at 5,000 cycles, down to a value of approximately 7,500 ohms. This condenser (C11) will have a capacity of .002-mf. The inductive reactance at 5,000 cycles would be 375,000 ohms, if it were not shunted by the capacity C11 the connections of which are shown in Fig. 15

The turns ratio of the transformer which will match a 7500-ohm plate load to the voice coil of a dynamic speaker can be determined very readily.

The turns ratio N is equal to the square root of the working impedance of the tube divided by the impedance of the speaker. For example; let us say that we have a nine-ohm voice coil; then, 7500 divided by 9 gives 833, and the square root of that is approximately 29; therefore, the turns ratio of the output transformer should be about 30-to 1.

There are available on the open market many push-pull output transformers which were designed for the '50 and '45 type tubes. These have a total primary impedance of about 8000 ohms, with turns ratios of various values; while many have several taps for matching different voice coils, or coil combinations.

A little thought, and reference to the proper turns ratio to match the speaker, will be repaid by the greatly improved audio-frequency response.

The "Odds and Ends" Battery Set

The connections of **Figure 16**, are for a simple, inexpensive direct-coupled battery set of fine tone quality, with provision for a phonograph pick-up.

The surprising volume on radio or phonograph pickup is due to the use of the pentode and direct coupling.

The "B" battery chain is very low—about 18 ma. The filament drain too, is low—0.38-amp total—being divided over two separate and distinct circuits as shown in Fig. 3.

The parts used are specified by their electrical values, to permit the experimenter to utilize the material that he has available.

Two "A" batteries are used; one supplies the two screen-grid tubes, and the other the pentode tube in the output stage. This design permits the pentode tube to be held at a potential difference above ground by the flow of its combined plate and screen-grid current through resistors R4, R5. The drop here is about 45 volts.

The plate (filament-to-plate, and filament-to-screen) voltage of the pentode is 135, with an effective bias of 13 volts from filament-to-grid.

The screen-grid voltage of V2 varies from 15 to 18, depending on the strength of the incoming signal.

The only warning to be given is that the filament circuits must not be permitted to short-circuit to the chassis; or led to any other grounded portion of the circuit, except through the proper resistors. This is vitally important.

Resistor R3 supplies the bias of two volts to V1 and V2. Shield the set, just as you would any other screen-grid receiver.

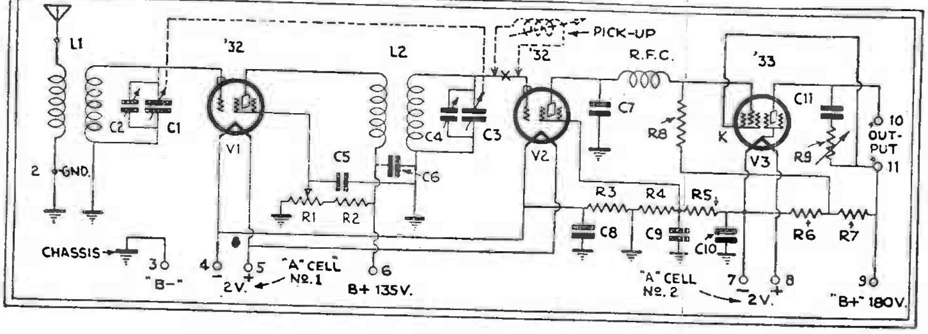

Fig. 16
This circuit, which the author chooses to call the "Odds and Ends," is intended for construction out of the experimenter's junk box; it is designed for battery operation, but obtains biasing voltages from resistors instead of taps. It may be used also for phonograph amplification.

If it is desired to connect a phonograph pickup, it is necessary only to remove the control-grid clip from tube V2, and connect the pickup leads in series with the grid, as shown in dotted lines.

The combination of the pentode and direct-coupled amplification will prove a pleasant surprise to those who try it.

The author has a lingering suspicion that this circuit will cause much comment; and would be glad to hear from any playing with this circuit, as to their results. A stamped self-addressed envelope will obtain a reply.

It will be noted, on reference to the list of parts following, that the value of .05-mf., instead of .002, is given for C11 in this circuit; and, as the diagram shows, this capacity is in series with a resistance R9, variable from 0 to 150,000 ohms. The purpose of this arrangement is to afford more complete control of the characteristic of the audio output, and obtain better matching with the numerous available reproducers under the varying tone characteristics of different programs. The recognition of this need is shown in late commercial design of receivers (such as the new "Model 10" of the U. S. Radio and Television Corp.

One shielded antenna coil for .00035-mf. tuning condenser, L1;
One shielded screen-grid coil for .00035-mf. tuning condenser, L2;
One two-gang 00035-mf. tuning unit with trimmers, C1-C2-C3-C4;
Four 0.1-mf. bypass condensers, C5-C6-C8-C9;
One 1-mf. bypass condenser, C10;
One .001-mf. mica condenser, C7;
One .05-mf. bypass condenser, C11;
One 85-mh. R.F. choke, RFC;
One 10,000-ohm volume control, R1;
One 10,000-ohm 1-watt pigtail-type resistor, R2;
Two 1,000-ohm 1-watt pigtail-type resistors, R3, R4;
One 1500-ohm 1-watt pigtail-type resistor, R5;
Two 250,000-ohm 1-watt pigtail-type resistors R6; R7;
One 500,000-ohm 1-watt pigtail-type resistor R8;
One 0-150,000-ohm variable resistor, R9;
One Antenna and Ground post strip 1-2;
One seven wire cable, 3-4-5-6-7-8-9;
One output terminal strip, 10-11;
Two UX sockets, V1-V2;
One UY socket, V3;
One 10 x 12-inch baseboard.

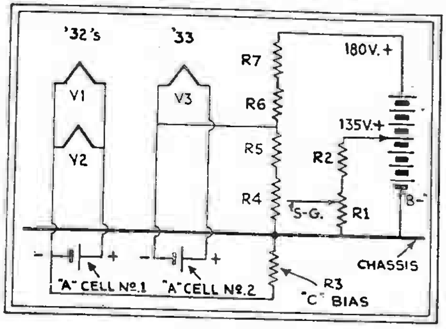

Fig. 17
The filament circuit in relation to the resistor system, to show the method of biasing.

What is Detector Overload?

WE hear quite a lot nowadays about the matter of overloading tubes; we want to know what is the undistorted power output of amplifier tubes; we want to know what the bias on the tubes happens to be, so that we may know how great a signal we can impress with safety on their input and so on.

We also hear quite a lot about overloading detectors as well as amplifiers—but here we strike a snag; because the detector is infinitely more complicated than the amplifier—not in its structure, but in its operation. It is surprising how few investigators have taken the trouble to look more seriously into the detector and its operational characteristics—yet how many can speak glibly and copiously about detector overload, the voltage output of the various detector circuits, the frequency-characteristic, and what not.

At any rate, regardless of how much we think we know about detectors, there is still plenty to be learned about them. It was for this reason—that plenty of vague information was available, not definite or quantitative data—that the writer some time ago undertook to study the variation of the tube "parameters" under the stress of signals of various strength. What happens to the plate current of a tube when the signal comes on; how does the grid bias of the tube vary with signal strength? How does the detecting efficiency of the tube vary with the strength of the signal? How? Why? When? Where?

Normal Detector Action

The results of this study are contained, in part, in a paper published in the *Proceedings of the I.R.E.*, for October, 1929. They will be here interpreted in a more elementary fashion for the benefit of the younger students of radio.

In the past a great deal of work has been done by investigators of the theory of detection; but, unfortunately, nearly all of this work was confined to the study of the effects of *small signals*, of the order of fifty millivolts or less, applied to the input. The signal was assumed to be so small that it produced no appreciable effect on the plate resistance, the plate current, the grid voltage, or the other tube constants.

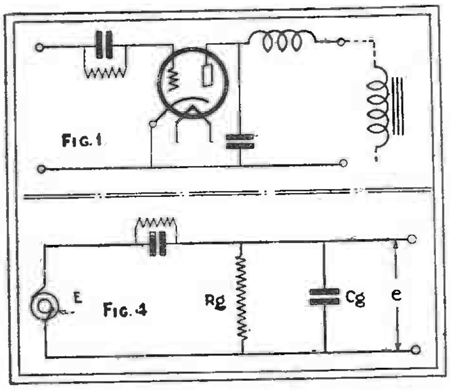

The simple detector circuit of the '27 type, standard in A.C. sets, is shown above as Fig. 1. We may analyze its input further into the form of Fig. 4, below, in which the grid-to-filament resistance is Rg and the tube capacity is Cg. The voltage actually impressed upon the tube, therefore, is e rather than E.

Actually, however, and especially in the case of the more modern radio receivers, the signal voltage applied to the input of the detector is rarely less than 200 or 300 millivolts; so much is generally required to furnish what we might call "good room volume" out of the loud speaker. Let us consider first the grid-leak detector. Of course this is somewhat out of date to-day, when we are using the "C" bias detector; but it is important that we know how the former type of detector acts, as well as the other.

We won't go into the theory of its operation. You can read all about that in any of the many text-books available. Besides, it has been printed time and again in radio magazines. At any rate, we know that, when a signal is applied to the input of the tube, there is a *decrease* of plate current. How much does this plate current decrease?

Fig. 1 shows the circuit of the detector. A constant signal of fifty millivolts (.05-volt) at radio frequency, was applied across the input of the tube, and kept constant. The grid-leak resistance was varied, and the current flowing in the grid circuit was measured. The curve obtained by this is marked ig in Fig. 2. This shows that, as the grid-leak resistance was decreased, the grid current increased; at first slowly, then more rapidly until, when the grid leak value was smaller than about half a megohm, the grid current increased to quite large values—as large as fifty or a hundred microamperes.

Grid Leak Not Critical

The bias on the grid is equal to the grid-leak resistance, multiplied by the current through it. So, performing this multiplication for various points on the ig curve, we obtained the curve marked Ec. This is interesting because it shows the grid bias of the tube to be practically constant, and independent of the grid-leak resistance; for the curve Ec is quite flat. In fact, there is no serious change in Ec until the grid-leak resistance is well under half a megohm. This, of course, does not interest us; because we would have a poor detector if we were to use such a low grid leak.

These curves apply to the UY-227 tube. The tube used was an "average" tube; so we may say that the usual operating grid bias of the UY-227 tube used with grid leak and condenser, and for small signals, is about 0.9-volt.

The other curve in Fig. 2, marked Dip, represents the *rate of change of plate current;* that is, the amount the plate current decreases when we apply the fifty-millivolt signal. This is of interest because it is a measure of the response of the detector to a signal of constant modulation. Notice also that this curve, Dip, is quite flat. This indicates that little is to be gained by using large grid-leak resistances. When we use grid leaks lower than about one megohm, we notice quite a drop in the response; but we see that there is very little, if anything, gained by going above two megohms.

Now all this is well enough for the small signal; but how about the large signal? Suppose we let the grid leak remain at 2 megohms and the grid condenser at .00025-mf., and gradually increase the signal, making the same measurements as before. We obtain the curves shown in Fig. 3. There is no use discussing the curves above about 500 millivolts (0.5-volt); because then the effects only become more marked.

Effect of Strong Signals

In Fig. 3 we see again the curves of grid current (ig) and grid bias (Ec); but now we notice that the grid bias *increases* with the signal strength. For very small signals it is about 0.9-volt; whereas, for a signal of about 500 millivolts (half a volt), we see it is about 1.7 volts.

Now we all know that increasing the bias of a tube increases its plate resistance. So the plate resistance of the tube was measured for various values of grid bias, and plotted as Rp in Fig. 3 according to the signal strengths corresponding to the various grid-bias voltages. Immediately we know the effect on the quality; at least as regards the output circuit of the detector. An increase in Rp means a decrease in the response of low audio frequencies; in other words, the greater the signal the poorer the low-frequency response, at least as concerns the output of the detector. Let us see what happens at the input.

Since the grid circuit has current flowing in it we know that its input impedance is not infinite. The input circuit of the grid-leak detector may be represented as in Fig. 4. The resistance Rg represents the *dynamic* input resistance of the tube, through which the grid current flows; and the condenser Cg represents the capacity of the tube. The other resistance and capacity are the grid leak and grid condenser. The generator E is supposed to be the audio-frequency (or modulation) component of the signal. If we were to analyze this circuit, and consider the value of the voltage E, which is applied to the grid and cathode, to be amplified in the tube, we would find—even though we kept the generator voltage constant and merely varied the frequency—that our signal would suffer a loss at the higher frequencies. In other words, the high modulation-frequencies would be attenuated by the operation of the grid condenser and grid leak and by the input impedance of the tube.

So, in the input of the tube, we have a loss of high frequencies, even for very small signals. But there is another effect, which is that, because of the increase of the dynamic input resistance of the tube with an increase of signal strength, the *detection factor*, shown in Fig. 3, decreases quite rapidly. (The detection factor is a measure of the efficiency of *rectification* of the tube.) So you see that our loss of high frequencies at the input of the tube becomes more serious as the signal strength becomes greater. Now let us sum up:

Broad Tuning Effects

With small signals, there is some attenuation of the higher audio frequencies. As

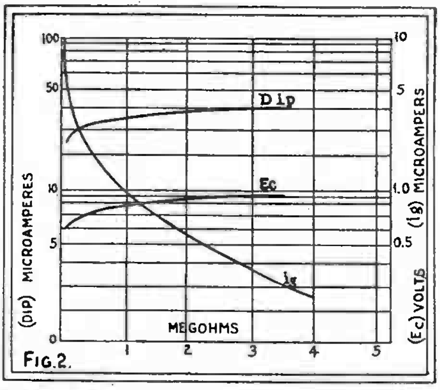

FIG. 2.

On a small signal, the change of grid-leak value directly affects the grid current ig; but there is little change in the effective grid bias Ec or in the rate of change of plate current, Dip.

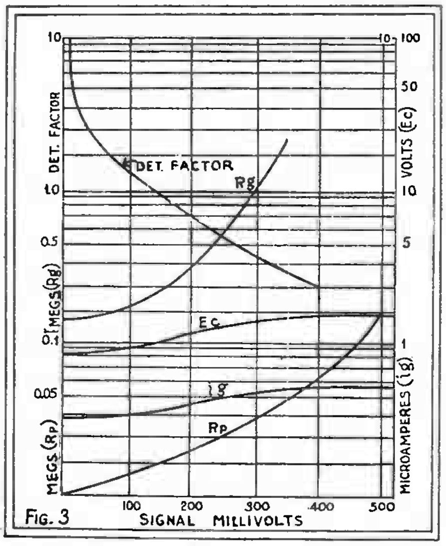

FIG. 3

As the signal strength rises to high values, so do grid bias Ec and grid current ig; but especially the input (Rg) and plate (Rp) resistances. The result is that the detector's efficiency falls off badly, as shown in the highest curve. (In this graph, which like the others is taken from the Proceedings of the I.R.E. *for October, the vertical scales are "logarithmic.")*

the signal becomes greater, we have a greater loss in the high frequencies at the input of the tube, and an increasing loss in the low frequencies at the output of the tube. At the same time we have a decrease in the efficiency of the tube as a detector.

Let us see what happens as we tune to a very strong station. At first, as we turn the dial around and approach the station, the signal comes in weakly with fairly good quality. As we approach closer to the station the signal becomes louder and louder, but we notice a change in the quality. First we notice the weakening of the low frequencies as compared with the high frequencies. Then, when we get quite close to the exact tuning point on the dial, the higher frequencies drop out, and our signal actually becomes weaker. This is because the detection factor has decreased more rapidly than the signal has increased. Then, as we pass over the exact tuning point, we find that our response increases, and the high frequencies come back again. Going still further around the dial, our signal becomes weak again and our low frequencies return.

You will notice that there were two "humps" or points on the dial at which the signal was loudest; this is due to overloading the detector. We have no precise rule when a detector of this type becomes overloaded, except to say that we must never let the signal on the detector get so strong that the detection factor has decreased faster than the signal increased and thus brought into view the "double hump." This double-hump affair not only gives us poor quality, but it also makes the tuning seem very broad.

These humps are quite similar to those shown in Fig. 5, which were taken on a "C"-bias detector, of the UY-227 type, but in a different way. A modulated signal was picked up by a receiver which incorporated a "C"-bias detector. The audio voltage across the loud-speaker terminals was measured. (Instead of plotting the actual voltage applied to the input of the detector, it was simpler to plot the setting of the vernier condenser in the tuned circuit. The exact point of resonance in each case was at 50 on the dial.) There are three cases shown—a curve for a fairly weak signal, one for a signal of medium strength and one for a signal of great strength. Thus we see in the curves, respectively, one peak, two peaks, and three peaks.

Comparing the middle curve with that on the right, we see that the stronger signal made the two peaks of the medium signal move farther apart and also introduced another one, between the other two. The peak in the middle was caused by making the signal so enormously strong that it caused an actual increase of response, in spite of the serious overloading of the tube. In other words, it fairly "swamped" the set.

Signal vs. Grid Bias

The "C"-bias detector is supposed to operate without any flow of grid current in the input circuit. You will notice in these curves that, when there is more than one peak, grid current flows (as shown below) and this grid current starts precisely at the points where the peaks occur. So the simple rule is, never let the signal applied to a "C"-bias detector be greater than the bias on the tube. To prove this, in the case of the extremely strong signal, the grid-bias voltage was increased, and the broken curve was obtained; which shows that the peaks have disappeared. In other words, by stopping the flow of grid current, the overload on the tube was removed and the tube was rendered capable of handling a greater signal.

Now, to consider the effect of the signal strength on the quality. In the case of the grid-leak detector we had a decrease of plate current and an increase of plate resistance; in the case of the "C"-bias detector we have an increase of plate current and an apparent decrease of plate resistance. So the answer is that, the stronger the signal (up to, but *not beyond* the overload point, at which grid current flows) the better is the reproduction of the low frequencies. When we allow the signal to be so strong that grid current flows, we "knock the quality all to pieces;" because of the great number of harmonics introduced into the signal. Furthermore, as you can see by the curves of Fig. 5, the apparent broadness of tuning becomes quite bad.

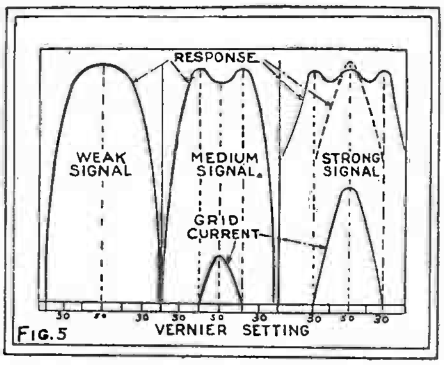

FIG. 5

Varying the tuning of a weak signal with the "vernier," we find true selectivity; but a medium signal is actually weaker on the point of exact resonance, because a grid current flows. The strongest signal causes bad distortion in a "C"-bias amplifier.

Reliable Tube Test?

A CHALLENGE to the designers of testing apparatus is contained in a recent bulletin issued to its service representatives by the Philadelphia Storage Battery Co., which manufactures not only receivers, but tubes, under the trade mark of "Philco." It says:

"We have done a lot of work with all kinds of tube testers, in an effort to find one that would be practical for our distributors to use. We have not been able to find any tester that could be used by a distributor and which would give accurate results on all kinds of tubes. We are continuing this investigation and, at present, have several new types of testers that we are working on and that perhaps might prove satisfactory. If they do, and their cost is within reason, we will pass the information on to you. At the present time, the very best way of testing a tube returned to you by a dealer is to try it in a receiver.

"An extract from a report of our research department on tube testing runs: 'It seems to be the general opinion among vacuum-tube engineers and others who have had contact with the testing of radio tubes in the field, that there is no simple form of apparatus yet available that will satisfactorily analyze a radio tube, enabling a Service Man to determine definitely whether a tube will operate in the radio set or not. It is quite possible that a tube which measures O. K. on a tester will not perform when placed in a radio set.

"'Inasmuch as Philco tubes are designed to operate in Philco sets, it would appear that the best test is the performance of the tube in the set. While not absolutely a perfect check, it should certainly give far better results than can be accomplished with most tube checkers designed for field use.'"

This positive declaration will undoubtedly arouse much interest among Service Men, and even more among the manufacturers of precision testing apparatus, designed for checking tubes. Their reply will surely be quickly forthcoming.

REPLACING THE TYPE '80 RECTIFIER WITH A MERCURY-VAPOR TUBE

A discussion of the advantages and the method of installing the new mercury-vapor rectifier.

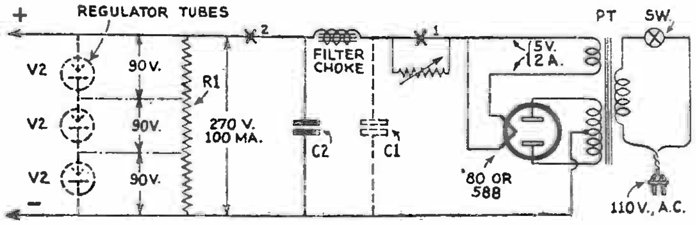

Fig. 1

A number of variations in power pack design are indicated in the above illustration.

EVERY Service Man and the users of the ordinary types of vacuum tubes are, in general, fairly familiar with their behavior, and it is by a comparison between the well-known types of tubes and the gas-filled types that we may become more familiar with the latter. The Perryman PR 588 tube is a rectifier containing mercury vapor and, therefore, belongs to the latter class.

From the Service Man's standpoint, the Perryman type PR 588 tubes were designed to reduce the tube losses incident to rectification and, by increasing the power available, to make more flexible the standard full-wave rectifier circuit. Incidentally, the voltage regulation in a receiving set is greatly improved by virtue of the fact that the current remains practically constant with considerable variations in voltage.

Accordingly, the insertion of a PR 588 tube into circuits designed for the standard type '80 tube will result in an increased voltage at the receiver terminals, higher current flow in the filter circuits, and a higher voltage across the filter condensers.

It is obvious that some judgment should be exercised in replacing a type '80 tube with a PR 588 tube for this very reason; as in some receivers the increased voltage and current may be troublesome, due to low current-carrying capacity or other shortcomings.

Therefore, the PR 588 tube should not be inserted indiscriminately into sockets designed for the '80. The problems involved in the installation and the service on the PR 588 tube are exactly the same as those pertaining to the regular '80 tube. The tube has been very conservatively designed and, when used under normal conditions, will give at least as long a life as the standard '80 tube.

Characteristics of Gas-filled Tubes

The utility of high-vacuum devices, their inherent stability, the high degree of development which they have reached, have resulted in a large measure in obscuring many of the advantages of gas devices.

The characteristics of a high vacuum device which are outstanding are: the absence of gas ionization; cathode temperature not increased by discharge; no blue glow or visible evidence of discharge; three-halves power relation of current to voltage.

The gas-filled tubes differ as follows: gas ionization is present and is made use of in reducing the effect of space charge; the cathode temperature increases with an increase in the discharge current; a blue glow (or other color) is a visible evidence of discharge; the three-halves power relation of current to voltage is not obtained.

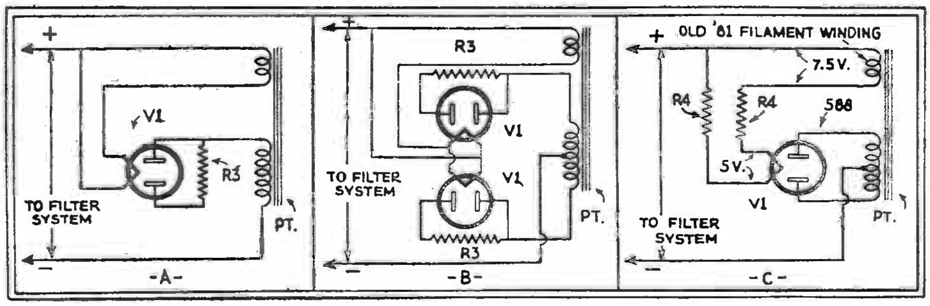

Fig. 2

At A, resistor R3 is used to balance the plate currents in the 588 rectifier; at B, the balancing resistors are indicated for full-wave rectification; and at C, the resistors R4 are used to lower the filament voltage.

A consideration of these two classifications of features shows that the two devices are scarcely comparable. However, the characteristics of the latter type tubes are particularly applicable to rectification.

The curves reproduced in Figure 3, show the relation of the plate voltage to the plate current. It will be noted that in a case of the vacuum type rectifier an increasing loss in voltage occurs as the current taken from the rectifier increases. This, of course, is due to the fact that the internal impedance of the tube is greater, due to the space-charge effect which surrounds the filament and prevents the ready evaporation of electrons.

The same curve shows the plate voltage—plate current relationship in the mercury type, and it will be noted here that as soon as the potential reaches a value exceeding 15 to 17 volts, an almost straight upward trend of current results; as a matter of fact, we find that the voltage remains constant for all loads between 20 to 300 milliamperes. This effect is highly desirable, and means that the power loss in the tube is constant for either small drains or large drains after once exceeding the ionization potential of the gas. We have therefore, in this device, a means for getting higher output of both current and voltage, and making this gain in efficiency available in external circuits.

There are certain fundamental considerations which must be observed to correctly adapt a mercury-vapor tube to power pack design; considerations which differ considerably from those which we associate with type '80 tube engineering.

For instance, the output of a type '80 rectifier may feed directly into an inductance, as shown in Fig. 1, or it *may* be fed into a capacity C1, as indicated by the dotted lines; the mercury-vapor tube, however, *demands* a capacity input,—that is, the latter dotted connection. This circuit, which results in high current- output, rather than high voltage, is the preferred method of operating the tube; although, of course, the inverse peak potential reaches a high value, or approximately three times that of the average or D.C. potential.

Replacing the '80

Let us take an average case, and note just what happens when the mercury-vapor type PR-588 tube is substituted for the high-vacuum type '80, in a power pack.

We shall continue to use Fig. 1, for reference, and take for the example a potential at the load resistor or standard (15,000-ohm) voltage divider R1, a potential of 270 volts; and a total current drain, read at X2, of 100 ma. (for convenience, this current figure is taken to represent the total drawn by the receiving tubes and the voltage divider when the receiver is in operation); the rectifier, V1, is an '80. Substituting for this tube one of the 588's, the voltage across R1 jumps to about 300, and the current will increase about 2 ma. This should not cause the voltage divider to burn out unless it was being operated much too close to the safety factor; since this current increase would be divided between the requirements of the tubes and the bleed or current consumption of R1. What might happen, however, in some poorly designed sets is circuit oscillation, due to the increase in the potentials applied to the various circuits of the receiver.

To remedy this situation, a series resistor could be inserted in the rectified power-supply circuit at X1; in the instance cited, a 300-ohm resistor would bring the potential across R1 back to the original figure of 270 volts.

Have we gained any advantage by making this change? To this natural question, an affirmative answer may be given, since the mercury-vapor rectifier tends to maintain a constant current in its output circuit.

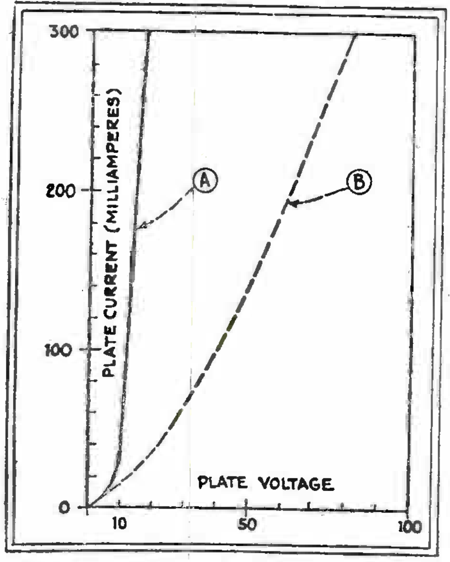

Fig. 3
Operating curve of Perryman mercury vapor rectifier (A), showing advantage over high-vacuum '80 (B).

This action may be likened to the result obtained when "regulator tubes" are used. As these must not be operated at potentials exceeding 90 volts, three of them would be required, as shown in dotted lines, V2; however, by the use of the type 588 tube, inherent in which is this regulating action, we are able to obtain, at 270 volts, a regulating action otherwise obtainable only through the use of three type 874 regulator tubes (neglecting their current considerations). Thus, we have a simple method of reducing a receiver's tendency to oscillate at sub-audio frequencies,—"motor boating."

For the reference of the technician, additional data are given on the adaptation of the mercury-vapor rectifier.

For instance, as a substitute for the type '81 or half-wave rectifier, the circuit shown at A, Fig. 2, must be followed. Here we find a new "trick" in circuit arrangement, the use of resistor R3; as one of two plates of a type 588 tube, when connected in parallel with the other, draws more current due to the fact that the filament is at a potential 2½ volts higher with respect to one plate than to the other. Consequently, by using Ohm's Law, we find, if the load current is 250 ma. (125 ma. per plate), then

$$RI = \frac{2.5}{.125} \text{ or 20 ohms.}$$

It must be remembered that while this resistance serves to maintain at the same value the difference of potential between the filaments and their respective plates, the filament must be correctly poled with respect to the filament transformer, in order for the plate to function equally.

Note this fact particularly, in regard to the use of two type 588 tubes in a half-wave connection. The current rating is practically double that of a single tube, but the voltage rating is the same; and resistors R3 should be 2.5 volts divided by one-fourth the total load current. This circuit is recommended for use in big radio receivers or public address amplifiers.

A power pack designed for two '81's may be rewired to use a single 588, as shown at C, Fig. 2. The power output will be the same, with the improved regulation obtainable from the latter as an added advantage. Resistors R4, 1.25 ohms each, are required to drop the filament potential from 7.5 volts (secondary potential) to 5 volts (tube-terminal potential).

TESTING TUBES FOR SHORTS

THE tester shown in Fig. 3 is made from three flashlight cells, a tube socket, and three flashlight bulbs, and makes it possible to test tubes quickly for shorts. This precaution will save trouble later.

On inserting a tube in the socket, the continuity of the filament is shown by the lighting of lamp No. 3; if this does not light, the filament is burnt-out. If No. 3 lights, the other two lamps should remain dark if the tube is in perfect shape.

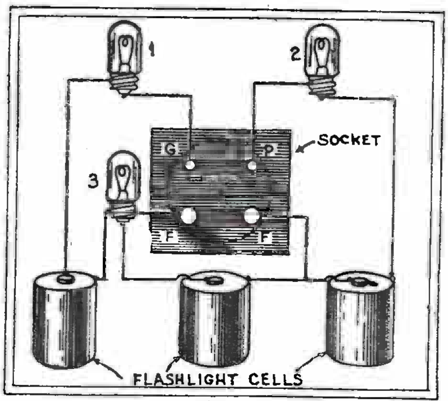

Fig. 3

If No. 1 lights, the grid and the filament of the tube are touching; if No. 2 lights, there is a short between the grid and the plate. In either case, the tube should be discarded.

Sometimes, however, such shorts can be remedied by gently tapping the tube in the palm of the hand. This may cause the misplaced elements to separate; if they do, it will be evident on repeating the test, when lamps 1 and 2 will fail to light.

A 6-VOLT BATTERY FOR 2-VOLT TUBES

NO doubt the best way to furnish power for the 2-volt tubes is by using the Air-Cell battery, but a great many people have an old 6-volt storage battery and are reluctant to throw it away. They may easily be converted to 2-volt batteries and I believe that it is economical to do so.

The first operation is to saw the connecting bars as shown in Fig. 1. The center cell is then raised and its position reversed; when placed back, it will appear as shown. Now procure two strips of lead connectors that will just reach across the battery and bend one end so that it will fit as shown. A hole is then drilled through the connector and the battery post so they may be securely fastened.

Now as near as possible to the ends of each cut connector bars, drill a hole. The bars are then bent upward until a bolt can be inserted and then bent down with the end of the connector bar fastened to the battery post as shown in the sketch. Two more holes are drilled to correspond with the holes in the cut connectors which are then bolted securely as shown. It is well to sandpaper each connection before tightening so that the very best connections can be obtained.

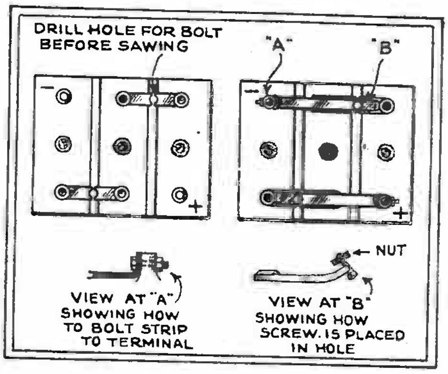

Fig. 1
A conversion that certainly makes for economy. Old 6-volt storage batteries may be rebuilt as described by the author for use with new 2-volt battery tubes.

Chapter VII

Tables, Charts And Design Data

The Service Man is Often Confronted with Problems of an Engineering Nature. The Data Given in this Chapter Will Be a Valuable Aid In Solving Them.

The Whole Ohm Family — R, X and Z

THERE are several different kinds of ohms—as many readers already know, and others have suspected from some of the theoretical formulas which they have encountered in their studies as Service Men, set builders and experimenters. That is to say, the ohm is not merely the unit of resistance (R), which, under a constant potential of one volt, allows one ampere to flow; but it is also the unit of reactance (X) and of impedance (Z). In order to explain the latter terms, let us first consider the fundamental nature of an alternating current; and, in connection with the latter, the common expression, a "sine-wave."

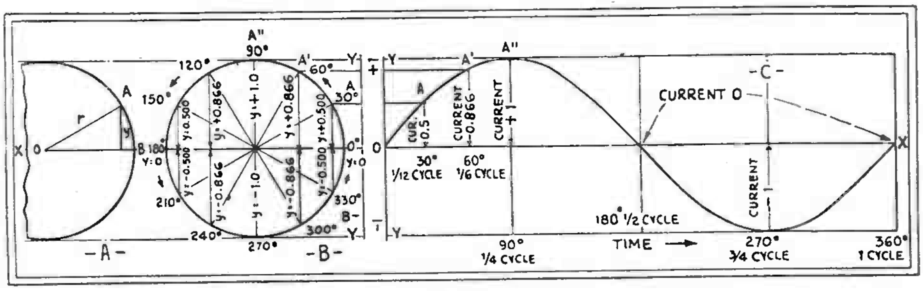

Fig. 1

Left, a single "sine." Middle, a flock of sines, each corresponding to its respective angle. Right, the conventional "sine wave" showing how it corresponds to the circle, and how the current (or voltage) fluctuates during the different portions of an A.C. cycle.

The Sine Wave

The *sine* is the distance between two sides of an angle; measured in terms of the length of one side, on a perpendicular dropped to the other side. See Fig. 1A, in which the line OA is the radius of a circle. Its length is r; the length of the line AB dropped from A perpendicularly on OB is y, then the *sine* of the angle between OA and OB is y/r. It is customary, in calculations, to take the length of the radius OA as 1; in which case, the sine will always be represented by a fraction the greatest possible value of which is 1.00.

For every possible angle, there is therefore a corresponding *ratio* called its "sine." The angle may be carried beyond 90°, around to 360°, and it may be increased still further as the radius continues to revolve around 0; but the numerical values of the sine will repeat at every quarter turn though alternately positive and negative. Similarly, in radio graphs, where alternating voltage and current are represented by curves, different polarities of voltage and directions of current flow are indicated by the spaces above and below a zero line drawn horizontally through the figure.

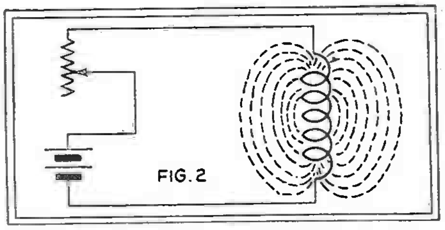

Every conductor (even a straight wire) carrying an electric current creates a magnetic field, as indicated at the right.

In Fig. 1B, we have a circle in which a radius is revolving around the center O, like the hour hand of a clock but in the opposite direction here; the height y of its end A above the zero line X-X, indicates the value of an alternating current. If the maximum value of that current is taken as 1, when the radius is pointing straight up, its value at any other moment will be indicated by the *sine of the angle* through which the radius has moved.

But, in drawing a graph like this, we make it difficult to measure the movement of OA after it has completed the first revolution; and so, to represent an alternating current, it is customary to suppose that the center of our circle is moving steadily along the line X-X (as in Fig. 1C. Then we can determine the time during which the alternations have been taking place, by measuring straight along X-X, which represents time. At the same time, measuring parallel to the line Y-Y, we determine current values which, in a true sine-wave, will be in exact proportion to the *sine* of the time-angle, or clock-hand, of Fig. 1B. This is called "plotting amplitude against time."

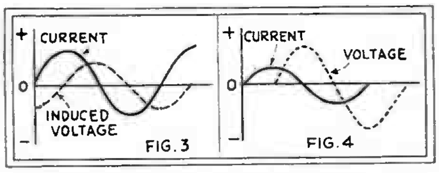

Inductance makes current "lag" behind voltage, as at the left: capacity makes current lead the voltage, as at the right.

When the clock hand of Fig. 1B passes 90° (which represents the first quarter of an alternating-current wave) it begins to come closer to the line X-X; and when it is right on the line again, zero current is represented. As the moving hand gets farther from this line, the current again increases; but it is reversed, as compared with its former polarity. When it gets to 270°, the current is at its negative maximum; and when it is again 0°, having completed 360° of turn, current is again zero, and the first cycle is over.

The same conditions are represented, but by a line which is pulled out into a "sine wave," instead of by a circle, in Fig. 1C. If we are speaking of 60-cycle current, the time represented by this curve is 1/60 of a second; if we are speaking of 600-kilocycle current, the time represented is 1/600,000 of a second. But, in either case, if we are dealing with pure sine-wave A.C. voltage, the curve will be of the same shape.

The Effect of Inductance

For the moment we will leave our pretty pictures and attempt an explanation of the term *inductive reactance*—pausing, of course, for a brief definition of the word *inductance*. Suppose that we have constructed a coil of wire wound around either an air core or on a pile of iron laminations, and connected as in Fig. 2. Magnetic lines of force are set up—our coil has become an electro-magnet. Now this inductive action will not be purely external, but there will be also interaction between the turns of wire within the coil itself. The strength of the magnetic field is proportional to the number of turns and to the current flowing. If the current is varied, the strength of the magnetic field will also vary in direct proportion.

It is only *when the current is changing* that this secondary effect, due to the common linkage of the turns, takes place. While the current is changing, *Lenz's law* informs us, the induced E.M.F. or voltage acts in such a way as to oppose the change which is taking place. Mark the fact that the direction of the current's flow (whether positive or negative) or its magnitude have nothing whatever to do with this—it is the *rate of change* in which we are interested.

Look again at the curve in Fig. 1C, and you will see that the current's magnitude is continuously changing, *except at the instant in each half-cycle when the maximum positive or negative value is reached.*

Since the *inductive* effect is at maximum when the "rate of change" is greatest, we may assume that the opposing E.M.F., due to the *inductance* of the circuit, is at its peak when the current wave is passing through its zero value; and we can plot a curve to this effect as in Fig. 3. The "peak" value of the current is as shown by the curve, while the R.M.S. (root-mean-square) or effective value is but .707 of the maximum (ordinary A.C. meters read R.M.S. values.)

At any instant the *slope* of the current curve gives the rate at which the current is changing; and it can be seen that the slope is steepest at the points where the current crosses the zero line. We may plot the dotted "sinusoidal" line shown in the Fig. 3 as representing an arbitrary relation between the current and the "back" or "counter" E.M.F. in an inductance coil of L *henries*.

Since the back E.M.F. is defined as being exerted in a direction opposing the current change, we also have shown the back E.M.F. as negative in value while the growth of current is in the positive direction. The curve of this induced *voltage* (the back E.M.F.) is seen from the figure to be just one quarter-cycle out of step with the *current;* and we say that it is out of phase by 90 degrees, and that the current "lags the voltage" or that the voltage "leads" by 90 degrees. This brings us up to the problem of phase difference from which we will beat a hasty retreat for the moment.

If the frequency in cycles is taken as *f*, the voltage induced by the changing current is equal to 6.2832 times *f* times the inductance in henries times the current in amperes:

$$E = 2\pi \times f \times L \times I$$

This leads us back to Ohm's Law for direct current; and we will find that, with the frequency set at a single value, the equations are parallel to those of Ohm's law but with XL (the inductive reactance—6.28 *f* L) taking the place of R; so that just as simply in the case of direct-current calculations:

$$E = I \times XL;\ I = E/X_L;\ X_L = E/I$$

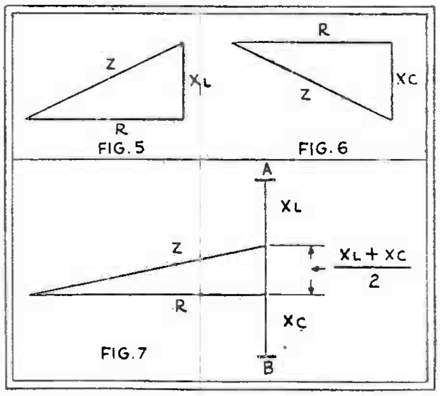

FIG. 5 FIG. 6 FIG. 7

Graphic methods of computing impedance; left upper, from resistance and inductance; right upper, resistance and capacity. Below, the resultant of all three factors.

Capacitative Reactance

The familiar phenomenon of the charge and discharge of a condenser, under direct-current conditions, gives rise to a complex effect in A.C. circuits. Just what this effect may be is readily understood by a review of the basic relations. A capacity differs from an inductance, not only in its physical constitution, but in the manner in which it is operative.

We saw that an inductance gives a back E.M.F. in direct proportion to the current through it. A condenser is rated in *farads* according to the quantity of electricity which may be added to the charge by raising the voltage across it by one volt; that is, a condenser which holds one coulomb (or ampere-second) of electricity for every volt across it has a capacity of one farad. This unit is so large that we employ the *microfarad* in most ordinary calculations.

While an inductance opposes any change in *current* by producing a back E.M.F., a condenser opposes any change in the *voltage* across it by charging while the potential rises, and discharging as it falls off. That is, there arises a current opposing any voltage change. If we plot (as in Fig. 4) the current and voltage relations in a capacitative circuit, we will find that the current is at a maximum when the voltage change is greatest; this condition arises as the voltage curve crosses the zero line. We can see that the current is leading the voltage by 90 degrees; exactly the opposite of the condition in the inductive circuit whose characteristic is shown in Fig. 3.

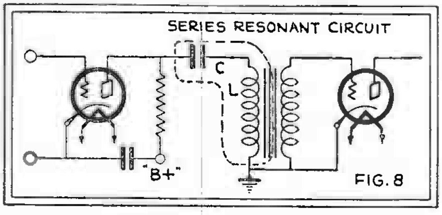

FIG. 8

The series resonant circuit, unlike the parallel, affords no path for direct current; but the resonant voltage developed is limited only by its losses (resistance).

By a process of mathematical reasoning, similar to that in the case of inductive reactance, we shall find that (when, as before f is the frequency in cycles, C the capacity in farads, E the impressed A.C. voltage, and I the back current which it causes):

$$I = 2\pi \times f \times C \times E$$

We therefore shall find that, while the inductive reactance *increases* with the frequency of alternations, the capacitative reactance *decreases* with the frequency. The statement of Ohm's Law, however, takes the same form:

$$E = I \times X_C;\ I = E/X_C;\ X_C = E/I$$

Hence: to find inductive reactance, multiply the inductance in henries by the frequency in cycles, times 6.283: the result is in ohms.

To find capacitative reactance, multiply the capacity in farads by the frequency in cycles, times 6.283; and divide 1.0 by the product: the result is in ohms.

(Note: since all capacities actually used are small fractions of a farad, this rule is not very convenient. It is better to use a capacity stated in microfarads and divide 1,000,000 by the final product.)

We have also noted that inductive reactance in the circuit caused the current to lag; whereas capacitative reactance caused the current to lead. (We assume a purity of either inductive or capacitative reactance in the circuit when we specify a lead or lag of 90 degrees; if the circuit is not purely inductive or capacitative the reactance of the circuit as a whole is *"complex."*) In a simple series circuit of inductance and capacitance, the capacitative reactance is subtractive from the inductive reactance.

For example: In a circuit having across it an inductance of 1.5 henries in series with a 40-microfarad (.0004-farad) condenser, what is the total reactance to 60 cycles A.C.?

$$XL = 6.28 \times 60 \times 1.5 = 565 \text{ ohms}$$

$$XC = 1.0 \div 6.283$$

$$\times 60 \times .0004 = 66.3 \text{ ohms}$$

$$X = XL - XC = 498.7 \text{ ohms}$$

Had a pure resistance of 10 ohms been in series with the combination, this would also increase it; but the total impedance would not be exactly 508.7 ohms, but would have to be determined by a more complex formula.

Computing the Impedance

In a circuit containing resistance alone, the current and voltage are in phase; in a combination of resistance and reactance, the impedance may be determined graphically by the construction of a right-angled triangle. (You may remember that, according to a famous geometrical theorem, the "square on the hypotenuse of a right-angled triangle is equal to the sum of the squares on the other two sides.") Our formula is:

$$Z^2 = R^2 + X^2$$

Then, as in Fig. 5, we can construct a triangle with R as the base, and XL the altitude; and measure the hypotenuse to find the value of the resulting impedance.

In the case of a capacity and a resistance, the triangle is constructed in a different manner with the altitude extended in the opposite direction as shown in Fig. 6. This leads us to a simple solution of the complex problem of inductance, capacitance and resistance in A.C. formulas.

As shown in Fig. 7, we first lay off the resistance; then the inductive reactance; then the capacitative reactance. The altitude of our triangle is then found by dividing the distance A-B by two; and the hypotenuse or impedance line may be drawn and measured.

This gives us a simple solution of the formula for finding impedance, which is:

$$Z = \sqrt{R^2+(X_L-X_C)^2}$$

Alternating currents are amenable to Ohm's law in the same sense as direct currents—the fundamental relation being I = E/Z. It is necessary however, in considering *complex* circuits, to consider the *phase relations* of the currents in the different branches before a solution may be achieved. We must therefore resort to algebraic equations or graphs in order to obtain solutions.

Resonant Circuits

We have shown that a *series circuit* composed of resistance and reactance has an impedance equal, not to their arithmetical sum, but to their "vector" sum instead, because of complex phase relations in the circuit. The *current* through a series circuit is of course the same in each element; but the *voltage* (across each element) is determined by the resistance, impedance or reactance of the individual element. It is therefore possible for the voltage across any one element to be greater than that across the combination.

In *series resonant* circuits (by "resonance" we describe the condition in which, at some one given frequency, the capacitative and inductive reactances are equal) we find a condition in which the voltage across the total circuit is zero and *theoretically* infinite across each element. The presence of resistance lessens this effect, but does not prevent its use in radio circuits. For example, we may design an amplifier stage (such as that shown in Fig. 8) and have the voltage across the inductance L rise to an extremely high value at the resonant point. This allows us to obtain in an A.F. amplifier a bass response which compensates for the lack of "lows" in reproducers, transformers, etc.

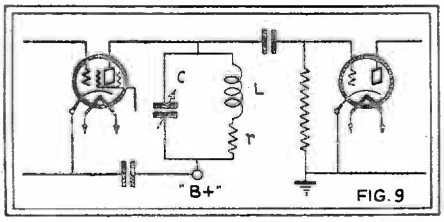

FIG. 9

The tuned circuit C-L would present infinite R.F. impedance at its resonant frequency, except for its innate ohmic resistance.

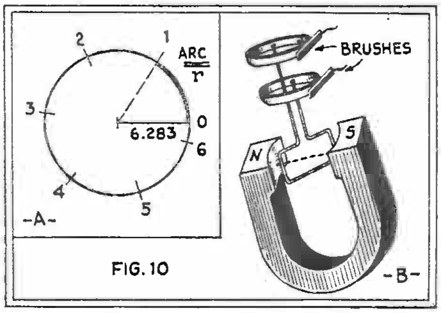

FIG. 10

Left, the heavy arc is a radian; impedance formulas take frequencies, not in whole cycles, but in radians: Right, why a generator creates a sine-wave in its revolution.

In *parallel circuits*, having single inductive and capacitative arms, the voltage across the circuit is the same for each branch; while the *current* through either branch is determined by its reactance. At resonance in a parallel circuit the impedance of the circuit as a whole is theoretically infinite; the current will be zero; and the voltage will attain a maximum value which is limited only by the presence of resistance in the circuit. That is why we attempt to maintain the resistance in radio circuits at a low value.

The impedance of a parallel circuit is the same as that of a series circuit at all other frequencies than that at which resonance occurs. At resonance, the "effective resistance" of a tuned parallel circuit would theoretically become infinite; actually, the effect of the unavoidable ohmic (or pure) resistance in the circuit moderates the effect so that the effective resistance becomes equal to

$$\frac{2\pi \times f \times L)^2}{R}$$

For example, if we desire to know the load presented to a vacuum tube by the resonant circuit shown in Fig. 9—in which the coil has an inductance of 200 microhenries (.0002-henry) and a resistance of 12 ohms at 1,000,000 cycles—we may readily find the effective resistance of the circuit when tuned to resonate at that frequency, which corresponds to 300 meters:

$$R \text{ (effective)} = \frac{6.28 \times 1{,}000{,}000 \times .0002^2}{12} = 131{,}000 \text{ ohms}$$

NOTE: The presence of the number 6.283+ (2 "pi") in the reactance formulas is accounted for by the fact that in higher mathematics it is found more convenient at times to measure angles in *radians*. The radian is the angle whose arc is just as long as the radius; there are therefore 6.283+ radians in 360 degrees (Fig. 10A). The frequency multiplied by 6.283+, to convert cycles of 360 degrees into radians, is commonly represented in formulas by the Greek letter "omega," which is like a *w* and is often used also for ohms.

In the sine wave of Fig. 1C, the *slope* of the curve represents the rate of change. It is therefore least at the top and bottom, where it is theoretically level; and greatest at the zero points, where it equals 6.283 x *f* x I (maximum); from which the maximum induced potential is found to be 6.283 x *f* x L x I (maximum). Since the factor determining the effective value, as regards the maximum, is the same for both current and voltage, it may be disregarded here.

The reason for the sine-wave form of generated voltages, in general cases, may be seen by considering a coil of wire, in the armature of a generator, revolving in the magnetic field (Fig. 10B). The voltage generated in that coil is proportional to the sine of its angle with the position of greatest flux; and its maximum at right angles, from which as unity (sine 1) the ratio is computed. The generation of a sine wave in an oscillating circuit is a matter of more complexity.

The resonance formulas are all based fundamentally on

$$f = \frac{1}{2\pi\sqrt{L \times C}}$$

in which L is in henries, and C is in farads. To reduce this to more practical units, every time a unit under the square root sign is reduced a million times, the *numerator* is increased a thousand times. When L is in microhenries, and C in micromicrofarads, for radio frequencies::

$$f = \frac{159{,}200 \text{ Kc.}}{\sqrt{L \times C}}$$

The standard work on this subject, for those who wish to go into it with considerable thoroughness, is Circular No. 74 of the Bureau of Standards, "Radio Instruments and Measurements." In this and other issues of RADIO-CRAFT, the matter of resonance and coil design will be treated in a more simple manner, with practical tables of information.—*Editor*.

Speaker Baffle Length

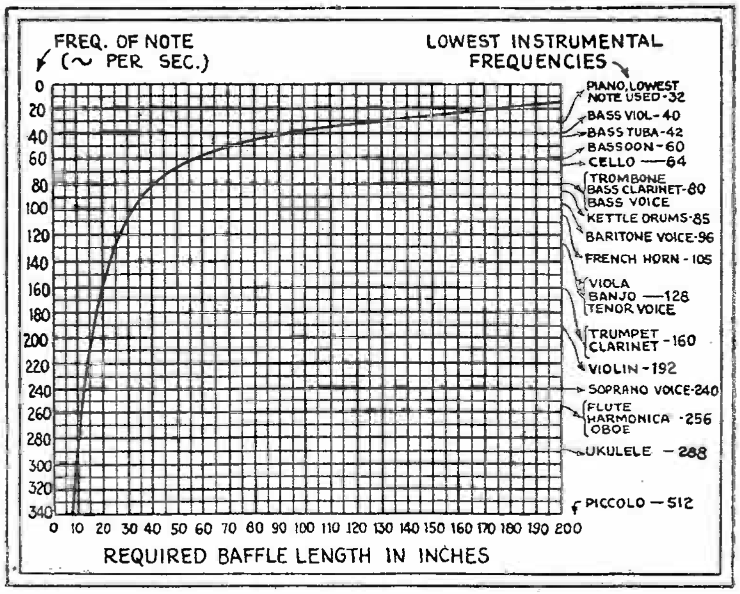

This graph, reproduced by special permission of the author, Mr. Alfred A. Ghirardi, and the Pilot Radio and Tube Co., is reprinted from the Spring, 1931, issue of Radio Design; *it illustrates the relation of the baffle's length to the cut-off frequency (left column of figures).*

Measuring Inductance and Capacity

How the Experimenter May Utilize a Reactance Bridge

IN Chapter III, page 66 appeared a description of the construction of a Wheatstone Bridge which could be used to measure unknown resistances such as are used in radio work. The object of this article is to show how the Wheatstone Bridge may be used also to good advantage by radio-tricians and Service Men for making various measurements of *inductance* and *capacity*—two important factors necessary for satisfactory reception of radio signals. Inductances, as used in radio work, function under alternating current; therefore, measurements should be carried out with alternating current.

Operation

Fig. 1 shows the circuit arrangement used in this bridge. In series with the battery "B," a buzzer is placed; and the combination is utilized to give an alternating current through the various arms of the bridge. (A high-frequency buzzer or a vacuum-tube A.F. oscillator, such as have been described in this issue, may also be used for this purpose.) With this arrangement a pair of phones serves as the indicating device; they are connected as shown in the diagram. If audio-frequency current flows through the phones, a sound will be heard; while, if no alternating current flows, no sound is heard. The Wheatstone bridge is then balanced by sliding the contact *c* over the arms *m, n* of the bridge until a *minimum* of sound is heard; this is the condition of balance.

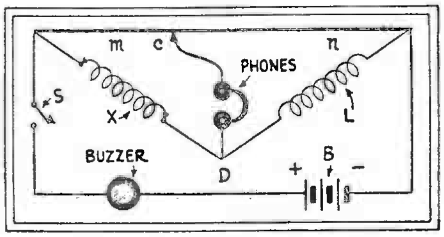

Fig. 1
The simple bridge, with buzzer and phones, for measurement of inductance.

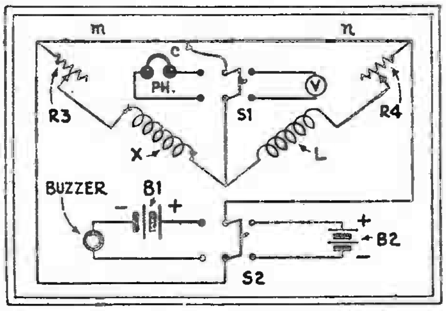

Fig. 2
The bridge arrangement for balancing inductance and resistance to obtain a true reading of the former.

(Note: "Minimum" sound is specified; because it may be impossible to obtain a zero sound-balance with this apparatus, on account of induction and stray capacity effects. Knowing this, we will now consider the case of measuring the inductance of a coil by means of such an arrangement.)

Measurement of Inductance

In the circuit arrangement of this bridge used for inductance measurements, *m* and *n* are the slide-arms of the bridge; *c* is the sliding contact; L the known inductance, and X is an unknown coil whose inductance is to be measured.

This circuit is in theory the same as that used in the resistance measurement, described in the preceding article; when the slider *c* is moved along *m* and *n* until a balance is obtained, a minimum sound will be heard in the telephones. Then the following relation is true:

$$\frac{X}{L} = \frac{m}{n}, \text{ therefore } X = L \times \frac{m}{n}$$

Thus, if a single standard inductance L and a slide-wire bridge with phones, battery and buzzer are available, the values of unknown inductances may be easily measured.

This relationship is only true in practice when the unknown inductance X is of the same order of magnitude as the standard inductance L. By this it is meant that inaccuracies will arise in these measurements if the standard inductance is about 0.1 millihenry, for instance, while the unknown inductance is 10 millihenries; because the ratio of *m* to *n* would then be too great to obtain an accurate balance. If the ratio of *m* and *n* is about 1 or 2, then a sharp balance will be had.

The following notes should be of interest to radio-tricians interested in accurate measurements with a bridge:

The formula given above for inductance is sufficiently accurate for all practical purposes; however, it does not take into consideration *the resistance* of the inductance coils. If there is a great discrepancy between the resistances of the two coils L and X, it is quite possible that a sharp balance will not be obtained. Balancing a Wheatstone bridge circuit is something like tuning a radio receiving circuit; since resistance in a resonant radio circuit makes for extremely broad tuning.

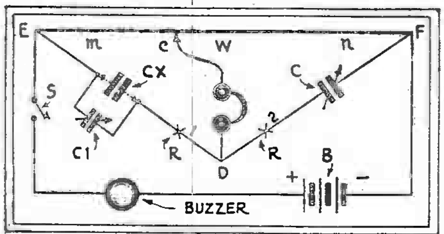

Fig. 3
Use of the bridge for capacity measurements, with the necessary compensation for zero setting.

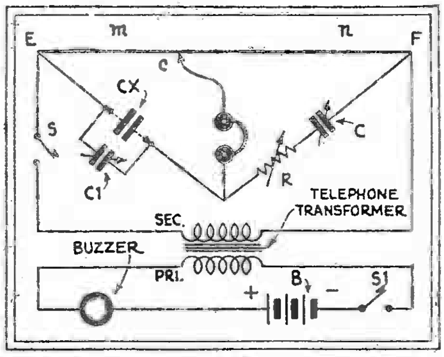

Fig. 4
The circuit connections of a Wheatstone bridge using a high-frequency buzzer, for accurate measurements of capacity.

Balancing a Wheatstone bridge is equivalent to reducing the resistance, and thus enables sharp balance or tuning. If the resistances of the coils are not balanced, a sharp balance will not be secured and, therefore, the accuracy of the measurement will be destroyed; since the accuracy of the measurement in a Wheatstone bridge depends upon the sharpness of the balance.

Correction for Resistance

Since all inductance coils have some resistance, a better arrangement of the bridge is shown in Fig. 2, where each coil has its compensating resistance (R3, R4) in series.

For precision measurements, it is necessary to strike a balance for both the *inductances* and the *resistances* of the coils. The inductance balance is secured by means of the buzzer and headphones; while the resistance balance is secured by a voltmeter and the battery B2 for the source of supply. In this bridge, Fig. 2, we use two double-pole double-throw switches (S1 and S2); one is used for switching on either the voltmeter V or the phones PH for the balance indicator. (The potentials of B1 and B2 must be found by experiment).

The buzzer and phones are used for the A. C. inductance balance, with switches S1, S2 thrown left; the battery and voltmeter, for securing a D.C. resistance balance, the switches thrown right. The variable resistors, R3, R4, placed in series with each of the inductances enable us to balance the inductance arms for resistance.

The following gives the method used for operating this type of bridge circuit. First, a balance is obtained for the A.C. signal; the double-pole, double-throw switches are both thrown to the left, to use the buzzer and phones. The sliding contact *c* on the wire *m-n* is varied until a balance is obtained. The switches are then thrown to the right to place the battery and voltmeter in the circuit. With the sliding contact *c* fixed at the position previously obtained, vary the resistance of R3 and R4 until the voltmeter *v* indicates a balance, by zero deflection. Now switch over again to the buzzer and phones, and vary the position of the sliding contact until a balance is obtained, as indicated by a minimum sound in the phones. Again switch back to battery and voltmeter, keeping the sliding contact *c*

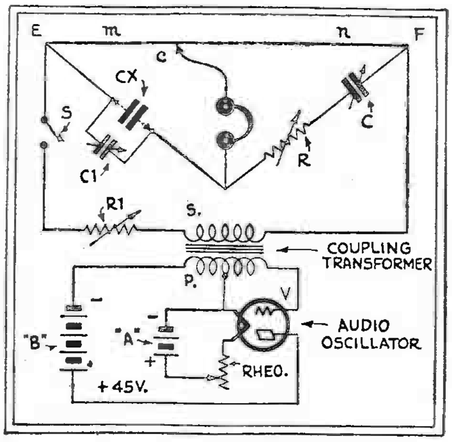

Fig. 5

The most satisfactory operation of the bridge is obtained with an A.C. oscillator giving a good note.

fixed in the new position previously found; and very the resistors R3 and R4 until a balance is obtained. Alternate this way until a very sharp balance is obtained on both D.C. and A.C.—then note the values of *m* and *n* and apply the formula previously given.

$$X = L \times \frac{m}{n}$$

It will be noted that the important adjustment of the sliding contact *c* was not changed in balancing the resistances of R3 and R4; since the important adjustment of the slider determines the inductance measurement. The above formula is absolutely correct and is based upon both types of balance thus obtained.

Measurement of Capacity

The Wheatstone slide-wire bridge may be used also to measure unknown capacities, there being required in this circuit but one known capacity. Fig. 3 illustrates the connections for this bridge; in which C is the known capacity and CX the unknown capacity, while *m* and *n* are the lengths of the two arms of the slide-wire, which are adjusted for a balance by a minimum sound in the phones.

It is evident that, with this arrangement, the resistance in one arm of the bridge is balanced against the impedance of the condenser in the adjacent arm. (The impedance of a condenser is the resultant of resistance and reactance but, as the resistance is so very low, compared to the reactance, it can be disregarded and the entire impedance considered as reactance.)

The reactance of a condenser varies *inversely* as its capacity; while the reactance of an inductance varies directly, and therefore the preceding formula must be re-written and used in the following form:

$$CX = C \times \frac{n}{m}$$

For example, the scale has 100 divisions and the sound is minimum in the phones at a point on the wire 25 divisions from E (Fig. 6); leaving 75 divisions for *n*, between F and *c*. Assuming that we use a standard capacity value of .002-mf. for C, we may substitute these values, giving

$$CX = .002 \times 75 = .006\text{-mf.}$$

In all these measurements using a buzzer to supply the alternating current to the bridge, it is advisable to set the buzzer at some distance from the bridge, or muffle it in some way; for otherwise it will be difficult to determine whether the sound is coming from the phones and due to the current passing through them, or whether it is direct noise from the buzzer. (A "high-frequency" buzzer is more quiet. See Fig. 4.)

An excellent source of A.C. voltage for measuring inductance and capacity is a vacuum-tube audio-frequency oscillator, which does not have the above-mentioned fault of buzzers. The terminals of the oscillator are connected to the points E and F of the bridge. (See Fig. 5) Resistor R1 controls the amount of A.C. fed to the bridge.

In these measurements, a calibrated variable (air dielectric) condenser may be used as the standard C; with this, a very large range of unknown capacities may be very simply measured.

First, the slider is set at the mid-point of the length of resistance wire, thus making *m* equal to *n*. The variable condenser C is then adjusted until a balance is obtained. Then, the dial reading of the standard condenser C will indicate the capacity of the unknown condenser CX; since *m* and *n* are equal.

A midget condenser, C1, is necessary in this measurement so that a balance (at the minimum capacity of C) may be had, and the zero reading of C taken without the unknown condenser CX in the circuit. It is required also to bring the balance point further up the scale on C when measuring small values of CX.

The effective resistance of the condensers enters into the measurement of capacities exactly as in the measurement of inductances; but, in the case of condensers using air as the dielectric, this is not very important because the resistance of such condensers is almost zero. However, where condensers have different dielectrics, (for instance, air, and "mud" compositions), there will be a considerable difference in their resistances; which means that it will be impossible to get a silent point in the telephones. However, a fair balance point can usually be secured.

Because of the insulating properties of condensers, the circuit will be open; therefore, it is impossible to balance this bridge with direct current. However, a good balance, with fair accuracy, is generally found when using the fundamental circuit shown in Fig. 3.

In order to secure a more accurate balance with this bridge, it is necessary to connect a variable resistor R in one or the other of the condenser arms, (X1 or X2, Fig. 3.); the proper place is found by trial. This will compensate for any resistance effect introduced by the condenser in the other condenser arm. The readings of this resistance, with and without the condenser CX, are indicative of the losses in the condenser under test. This is a check-up of "leaky" condensers.

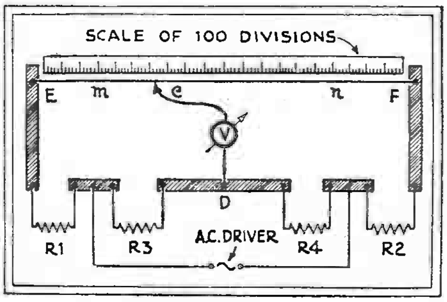

Fig. 6

A wooden base, 8 x 45 inches, will mount a one-meter rule as shown.

Construction of a Slide-Wire Bridge

The connections between the components of the bridge are made on the top of the wooden base by means of brass straps 1½ inches wide and ¼-inch thick (Shown in Fig. 6.). The holes for the terminals are tapped the correct size.

The wire used for *m* and *n* may be of any standard make of resistance wire (such as nichrome, German silver, constantin, etc.) and its gauge from No. 24 to No. 28 B & S.; as these are the most convenient sizes with which to work. (Note: Be careful to secure uniform wire, for the resistances of the two arms of the bridge *m* and *n* are proportional to their lengths only if their cross sections are equal.)

The resistance wire is stretched taut almost flat on the board, and securely fastened at E and F to the brass strap at each end of the bridge. The meter-scale is mounted directly beneath the resistance wire, thus positioning the slide-wire about $\frac{1}{16}$-in. above the meter-scale. The contact slider *c* may be one of the sharp edges of a ¼-in. brass rod; the opposite edge being soldered to a length of rubber-covered lamp cord. Compare Fig. 6 with Fig. 2.

How to Figure the R.F. Coil Secondary

(With Tables of Coil Constants)

THE procedure to be followed in determining the inductance to be used with a given condenser, to cover a given range of frequencies, is a "closed book" to all too many radio workers. It is the purpose of this little article to shed some light on the subject; and the writer, after an effort to simplify the problem to the *N*th degree, hopes that the explanation will not be found too sketchy.

It is generally known that a capacity and an inductance form a resonant circuit; that is, the combination of a coil (inductance) and a condenser (capacity) will tune to a particular frequency or wavelength, and, by changing the electrical value of one unit or the other, the wavelength to which the combination will tune will be changed. But, if the electrical value of one unit is *increased*, while that of the other is proportionately *reduced*, it is possible to maintain resonance at the same frequency; that is, keep tuned to the same station. In other words, we have altered only the *ratio* between the electrical value of the coil and condenser—we have "changed the L/C ratio," to use a common expression. But the "L×C *product*" remains the same.

It is customary to vary the capacity of a condenser, to tune in stations; consequently if knowing the capacity in use, we apply the "L×C product" figure indicated for a particular wavelength (Table I) we immediately learn the coil value *required*. We are then in a position to go ahead and design this inductance. This table is extremely convenient for coil calculations and for that matter, in capacity calculations, too.

Calculation of Tuning Range

The values of inductance and capacity employed at radio frequencies are small, and generally stated in microhenries of inductance and microfarads of capacity, as in Table I. The relation between the product (of the inductance and the capacity) and the frequency is given by the following formula:

$$f = \frac{159,200}{\sqrt{L \times C}}$$

In which f is expressed in cycles, L in microhenries, and C in microfarads. The table covers the broadcast band.

A handy, and quite accurate, formula for the calculation of the inductance of a simple single-layer coil is as follows:

$$L = \frac{0.2\, d^2\, N^2}{3d + 9b}$$

Those not familiar with equations of this kind will understand its application more readily as expressed below:

Multiply the number of turns of wire by the diameter of the form (in inches): square the product, and divide by 5. Then add three times the diameter of the form to nine times its length (also in inches). Divide the result of the first operation by that of the second; the result is the inductance of the coil in *microhenries*. (A number is *squared* when multiplied by itself; the square of 4, for instance, is 16.)

For example: A cylinder with a diameter of 2 inches has 70 turns of wire wound on it, and the length of the winding is 2 inches. Substituting these values in the above formula, we have:

$$\frac{0.2 \times 2 \times 2 \times 70 \times 70}{(3 \times 2) + (9 \times 2)} = 163.3 \text{ mh.}$$

The use of the L×C table simplifies the amount of work necessary to determine the various values of L and C required for the broadcast band.

For example: A .0005-mf. variable condenser is available, and it is desired to find the value of inductance which will enable the combination to tune to the *highest wavelength in* the broadcast band.

Referring to Table I, we find that the product of L and C corresponding to 545.1 meters (or 550 kc.) on the chart is .08428. Dividing this number by .0005 (the capacity of the condenser in microfarads) we obtain 168.6, the inductance of the coil in microhenries.

TABLE I

Kc.	WL.	LxC	Kc.	WL.	LxC
550	545.1	.08428	1030	291.1	0.2389
560	535.4	.08119	1040	288.3	.02343
570	526.0	.07827	1050	285.5	.02299
580	516.9	.07551	1060	282.8	.02255
590	508.2	.07288	1070	280.2	.02213
600	499.7	.07040	1080	277.6	.02171
610	491.5	.06808	1090	275.1	.02130
620	483.6	.06593	1100	272.6	.02090
630	475.9	.06383	1110	270.1	.02052
640	468.5	.06185	1120	267.7	.02016
650	461.3	.05998	1130	265.3	.01980
660	454.3	.05823	1140	263.0	.01946
670	447.5	.05658	1150	260.7	.01914
680	440.9	.05501	1160	258.5	.01882
690	434.5	.05348	1170	256.3	.01852
700	428.3	.05198	1180	254.1	.01821
710	422.3	.05051	1190	252.0	.01789
720	416.4	.04907	1200	249.9	.01760
730	410.7	.04767	1210	247.8	.01731
740	405.2	.04630	1220	245.8	.01702
750	399.8	.04495	1230	243.8	.01675
760	394.5	.04380	1240	241.8	.01648
770	389.4	.04268	1250	239.9	.01622
780	384.4	.04164	1260	238.0	.01596
790	379.5	.04060	1270	236.1	.01571
800	374.8	.03960	1280	234.2	.01546
810	370.2	.03866	1290	232.4	.01522
820	365.6	.03774	1300	230.6	.01499
830	361.2	.03684	1310	228.9	.01476
840	356.9	.03596	1320	227.1	.01452
850	352.7	.03511	1330	225.4	.01432
860	348.6	.03429	1340	223.7	.01411
870	344.6	.03351	1350	222.1	.01390
880	340.7	.03275	1360	220.4	.01370
890	336.9	.03201	1370	218.8	.01350
900	333.1	.03129	1380	217.3	.01330
910	329.5	.03059	1390	215.7	.01311
920	325.9	.02991	1400	214.2	.01292
930	322.4	.02926	1410	212.6	.01274
940	319.0	.02864	1420	211.1	.01256
950	315.6	.02804	1430	209.7	.01239
960	312.3	.02746	1440	208.2	.01222
970	309.1	.02688	1450	206.8	.01205
980	305.9	.02634	1460	205.4	.01189
990	302.8	.02582	1470	204.0	.01173
1000	299.8	.02532	1480	202.6	.01157
1010	296.9	.02483	1490	201 2	.01142
1020	293.9	.02436	1500	199.9	.01127

Now, in order that the combination of the coil and condenser shall tune from the highest to the lowest wavelength, it becomes necessary to know the *minimum* capacity of the condenser and its associated circuits.

The table is again consulted and the value of the L×C product for 199.9 meters (1500 kc.) is found to be .01127. Substituting this in the formula:

$$\frac{.01127}{168.6 \text{ (mh.)}} = .000067 \text{ (mf.)}$$

As the capacitative effects of the tubes, wiring and shielding, and the minimum capacity of the condenser add together, it can be seen that the actual minimum capacity of the variable condenser alone should be quite small. In practice, 18 mmf. or less is possible.

Thus we find that a coil suitable for use over the broadcast range with a .0005-mf. tuning condenser should have an inductance of approximately 160 to 170 microhenries; the exact value depending upon the actual maximum capacity of the condenser. Most ".0005-mf." variable condensers are not exactly .0005-mf., but slightly over or under that value, unless made with special precision.

Those not interested in the above simple mathematics of the coils will find in Tables II and III some tabulated data of various coil sizes to be used with the more standard values of capacity; namely, .0005- and .00035-microfarad.

In tabulating these coils, the largest size of wire possible, in proportion to the length of winding, is specified.

The various coverings on wires are not of absolutely standard thickness, in one make of wire as compared to another; and, since this table is for shop or experimental use it is advisable to wind more turns than specified here, to compensate for any discrepancy in the maximum value of the condenser, and for difference in the thickness of the insulation. The additional turns are removed after testing the coil in conjunction with the condenser for which it is intended.

The first column of the tables represents the diameter of the coil form, in inches; and the second, the length of the winding in inches. No attempt has been made to maintain the ratio of 2.46 to 1 between diameter and length; which is, theoretically at least, the most efficient in obtaining a given inductance with the least wire.

TABLE II

Coils for .0005-mf. Condensers

Diam. In.	*Length In.*	*Wire*	*No. Turns*
3	1	23 Enam.	42
3	1½	20 Enam.	45
3	2	19 S.C.C.	49
3	2½	18 S.C.C.	55
3	3	16 Enam.	57
2½	1	25 D.S.C.	46
2½	1½	22 Enam.	56
2½	2	20 Enam.	60
2½	2½	19 Enam.	61
2½	3	18 S.C.C.	66
2	1	25 Enam.	53
2	1½	23 Enam.	62
2	2	22 S.C.C.	70
2	2½	20 Enam.	75
2	3	19 Enam.	80
1½	1	28 Enam.	75
1½	1½	26 Enam.	86
1½	2	24 Enam.	94
1½	2½	23 Enam.	100
1½	3	22 Enam.	108
1	1	30 Enam.	95
1	1¼	32 D.S.C.	106
1	1½	28 Enam.	112
1	2	28 D.S.C.	132
1	2½	26 Enam.	140
1	3	25 Enam.	156

TABLE III

Coils for .00035-mf. Condensers

Diam. In.	*Length In.*	*Wire*	*No. Turns*
3	1	26 S.C.C.	50
3	1½	24 D.S.C.	61
3	2	21 S.C.C.	60
3	2½	19 Enam.	65
3	3	18 D.S.C.	68
2½	1	27 D.S.C.	55
2½	1½	24 D.S.C.	53
2½	2	22 D.S.C.	69
2½	2½	21 S.C.C.	75
2½	3	19 Enam.	80
2	1	29 D.S.C.	66
2	1½	26 S.C.C.	75
2	2	24 D.S.C.	89
2	2½	22 Enam.	92
2	3	21 Enam.	99
1½	1	32 D.S.C.	84
1½	1½	27 Enam.	97
1½	2	25 Enam.	104
1½	2½	24 Enam.	115
1½	3	24 S.C.C.	123
1	1	37 D.S.C.	121
1	1¼	35 D.S.C.	132
1	1½	30 Enam.	136
1	2	32 S.C.C.	168
1	2½	29 S.C.C.	165
1	3	28 S.C.C.	180

Short-Wave Inductances and How to Figure Them

With a few tables which the experimenter may find it convenient to have on hand.

"HOW many turns on the coil" was answered, as regards the long-wave broadcast band, in an article appearing *on page* 204. Tables were given, as well as general rules which may be applied to the short-wave bands; but some further explanation may be added.

Recapitulating the previous discussion, the wavelength of a tuned circuit is directly proportional to the *square root* of the product of the inductance and the capacity in that circuit; resistance in the circuit affects only the sharpness of tuning.

TABLE I

Kc.	Meters	*LxC	Kc.	Meters	*LxC
1500	199.9	11260	6750	44.4	555
1600	187.4	9900	7000	42.8	520
1700	176.4	8770	7250	41.4	480
1800	166.6	7815	7500	40.0	450
1900	157.8	7020	7750	38.7	420
2000	149.9	6340	8000	37.5	395
2100	142.8	5750	8250	36.3	370
2200	136.3	5225	8500	35.3	350
2300	130.3	4775	8750	34.3	330
2400	125.0	4400	9000	33.3	315
2500	120.0	4060	9250	32.4	295
2600	115.3	3750	9500	31.6	280
2700	111.1	3500	9750	30.8	265
2800	107.1	3250	10000	30.0	255
2900	103.4	3010	11000	27.3	210
3000	100.0	2815	12000	25.0	175
3250	92.3	2400	13000	23.1	150
3500	85.7	2080	14000	21.4	130
3750	80.0	1800	15000	20.0	113
4000	75.0	1585	16000	18.7	99
4250	70:6	1405	17000	17.6	88
4500	66.7	1250	18000	16.7	78
4750	63.1	1120	19000	15.8	70
5000	60.0	1015	20000	15.0	63
5250	57.1	920	25000	12.0	41
5500	54.5	845	30000	10.0	28
5750	52.2	765	40000	7.5	16
6000	50.0	705	50000	6.0	10
6250	48.0	650	60000	5.0	7
6500	46.1	600	75000	4.0	4

---

* L in microhenries: C in micromicrofarads.

For instance, the highest wavelength in the regular broadcast band (545.1 meters) is 2.73 times the shortest (199.1 meters); therefore, if the inductance in the circuit is constant, there must be 7.48 times as much capacity across the coil at the upper wavelength. That is to say, the difference in capacity between the upper and the lower settings of the tuning condenser must be just 6.48 times the miscellaneous capacities of the circuit (the minimum condenser capacity, the self-capacity of the coil, and the other capacities which exist between all leads, etc., of different R.F. potential). So, if there is 324 mmf. variation in the condenser, the rest of the circuit must have a residual capacity of 50 mmf., if the dial settings are to cover exactly the broadcast band and no more.

But, when we get into short waves, the difference in capacity and inductance must be very much greater than the difference in wavelength. A circuit tuned to 15 meters can have only 1/179th the combined capacity and inductance of one tuned to 200 meters. No ordinary condenser-and-coil combination can cover this; we must change inductances, and, if we stick to one condenser, select one with capacity rather too high for the short waves, and too low for the long waves. The solution has been, in the latest short-wave models, to introduce coil- and capacity-changing switches, and other complicated mechanical devices.

There are reasons for endeavoring to keep the inductance as high as possible, and to use the lowest practicable capacities; the signal strength developed across a circuit is proportional to the inductance, when other things are equal. The variometer method of changing inductance is theoretically attractive, but difficult in practice. For that reason, the simplest and most generally followed method of changing wavebands is to plug in a suitable set of coils for each band.

Calculating Inductance

As said before, the upper tuning range of any coil is determined by the total capacity across it. Table I gives the inductance-capacity products for selected wavelengths from the broadcast band down to ultra-short waves; the LxC column represents microhenries multiplied by micromicrofarads, for ease in figuring.

TABLE III

TWO-INCH CIRCULAR FORM: (Inductances in Microhenries)

No. of Turns On Coil--	No. of Turns of Wire Per Inch 7	11	17	26	33	60
3	0.7	0.8				
4	1.1	1.3				
5	1.6	1.9	2.3			
6	2.0	2.6	3.1			
7	2.6	3.2	3.9	4.6		
10	4.3	5.6	6.9	8.1	8.9	
15		9.9	12.6	15.4	17.2	
20		14.7	19.4	23.7	26.7	32.0
25			26.2	32.9	37.9	45.9
30			34.0	43.6	49.6	60.6
40				63.6	76.6	94.1
50					102.3	131.6
60					132.0	171.4

ONE AND THREE-EIGHTHS INCH FORM (Tube Base)

No. of Turns on Coil--	7	11	17	26	33	60
3	0.4	0.6	0.6			
5	0.9	1.1	1.3	1.6		
7	1.4	1.8	2.3	2.7	3.0	
10		3.1	3.9	4.7	6.3	
15			7.1	8.6	10.0	12.1
20				13.4	15.4	19.5
25					21.4	26.8
30					27.9	35.0
40						54.0
50						72.7

Inductance values of some short-wave coils.

It will be seen that the large capacities used for broadcast tuning would demand inductances so small as to be impracticable, below 100 meters. For all-wave receivers, tuning capacities from .00014- to .000175-mf. (140 to 175 mmf.) have been popular; but for specialized short-wave receivers, the tendency has been to go lower yet. Even 32-mmf. midgets have been used successfully. It is true that, the smaller the capacity, the narrower the band covered; but the better results obtained, and the easier tuning in the band covered, are compensations.

The rule ("Nagaoka's") laid down in the textbooks for determining the inductance of a plain tubular or "solenoid" coil, expressed in familiar standards of measurement, may be thus simplified: first, multiply the square of the diameter of the coil, in inches, by the number of turns on the coil, and then by the number of turns to the inch.

The result is to be divided by a number which varies indirectly with the ratio between the diameter of the coil and its length. The inductance in microhenries is about 1/40 of the product above obtained, for a coil very long in proportion to its diameter; about 1/200 of the product, for a coil of very few turns.

The number ("Div.") to be used for the division varies, as follows, for different proportions of the coil; "D/L" represents the diameter of the coil divided by the breadth of the winding.

TABLE II

D/L	"Div."	D/L	"Div."	D/L	"Div."	D/L	"Div."
8	169	3½	101	1¾	71	5/8	51
7	155	3	93	1½	67	1/2	49
6	139	2¾	89	1¼	63	3/8	47
5	126	2½	85	1	58	1/4	44
4½	117	2¼	81	7/8	56	1/8	42
4	109	2	76	3/4	53	Limit	40

Thus, for example, a coil is 2 inches in diameter and has a winding of 60 turns, in a space of an inch and a third. Then 2 x 2 x 60 x 45 (number of turns to the inch) divided by 67 (corresponding to the D/L ratio of 1½) equals 161 microhenries.

Effect of Coil Spacing

The first thing which is apparent on looking at these figures, is that the inductance, with the same number of turns and spacing, increases very nearly as the square of the diameter, if the coil form is not too long. A coil of twice the diameter, other things being equal, has four times the inductance, only twice the wire, and twice the ohmic resistance. However, short-wave coils have been getting smaller and smaller, just as have broadcast coils, for various reasons; including the need of complete shielding at a respectful distance from the coil itself.

As a matter of interest, it has been calculated that a coil, the diameter of which is equal to two-and-and-a-half times its length, is most efficient in the use of wire.

We also see that, with the same diameter and same spacing, a coil's inductance increases very nearly as its length; particularly as it becomes long and thin in shape.

Now, a short-wave coil requires very little wire, because its inductance is low. On the other hand, low capacity is more important at high frequencies. Instead of winding the wire closely together, as in a broadcast coil, we may space it without reaching an inconvenient size. Spreading a certain number of turns, if they are few, reduces the inductance comparatively little in a coil which is very narrow. Six turns on a 2-inch form, for instance, if they are wound at the rate of 30 turns to the inch, give an inductance of 3.7 microhenries; to be compared with 3.5 if they are wound at the rate of 24 to the inch. But, supposing that we use No. 22 wire in both cases, the spacing between the copper of the wires would be doubled, with considerable reduction in the self-capacity of the coil.

Instead of giving, therefore, the specifications of the coils with the wire, of different insulations, wound closely, we shall give them in turns to the inch.

It is customary, for ordinary purposes, to divide the short-wave band below 200 meters into four ranges, to be covered by as many sets of coils. This gives us, allowing a moderate overlap of the bands, a capacity ratio of about 4 to 1 over each band. It is impossible, of course, to specify the range which a short-wave coil will cover, without reference to the receiver in which it is placed; for very slight stray capacities have a much greater effect than in long-wave circuits.

TABLE IV

ONE-INCH FORM: (Inductances in Microhenries)

No. of Turns on Coil	Number of Turns of Wire Per Inch 7	11	17	25	33	50
3	0.26	0.32	0.38			
5	0.54	0.69	0.86			
7	0.85	1.13	1.42	1.72		
10	1.35	1.83	2.43	2.94	3.33	
15	2.12	3.11	4.0	5.4	6.2	7.6
20		4.4	6.2	7.5	9.5	11.8
25		5.8	8.3	10.8	12.8	16.5
30			10.2	13.9	16.5	21.6
40			14.8	19.6	24.4	31.8
50				25.5	31.8	43.4
60				31.25	39.8	55.6
75					51.6	72.1
100						102.0

THREE-QUARTERS INCH FORM:

No. of Turns on Coil	Number of Turns of Wire Per Inch 7	11	17	25	33	50
3	0.14	0.18				
5	0.30	0.37	0.48			
7	0.48	0.64	0.80			
10	0.75	1.03	1.37	1.65		
15	1.24	1.75	2.24	3.04	3.5	
20		2.48	3.40	4.46	5.3	6.6
25		3.22	4.60	6.06	7.2	9.3
30			5.74	7.81	9.3	12.1
40			7.97	11.03	13.8	17.9
50				14.35	18.0	25.2
60					22.3	31.1
75					29.0	40.9
100						57.4

At high frequencies, the inductance of a coil is less than at the lower; in addition, capacities are slightly less. The first effect is due to the "skin effect," which keeps current from flowing at full density in the interior of the wire; the second to the fact that no dielectric is perfect. However, neither variation amounts to more than seven per cent, at most, and they may be neglected in the approximations which are made here; since outside capacities and inductances are more important than slight variations in the short-wave coil.

As stated in the preceding installment, the short-wave bands are usually covered by from three to five sets of inductances. More efficiency may be obtained by "spreading the bands"; but more coils and more changing are required. Four seems to be the most popular number.

Determination of Inductance

Suppose our bands to be from 13.6 to 30 meters; from 27.3 to 60 meters; from 57 to 111 meters; and from 103.4 meters to 200 meters. (The tuning condenser does not give the same ratio over the higher band, because there is a larger coil capacity in shunt across it.)

Our top LxC product, for the lowest band, is 253.2; that is, the product of the maximum capacity of our tuning condenser (plus the distributed capacities around it) by the inductance of the coil, must be at that figure. Say we have a 100-mmf. condenser; its minimum capacity is 6 mmf., and the total miscellaneous capacities are 18.3 mmf. Our coil, at maximum, is resonated by a total of 118.3 mmf. capacity in parallel; it must therefore have an inductance of 2.14 microhenries.

A two-inch coil, wound 11 turns to the inch, will have an inductance, according to our first formula, of 2.3 microhenries, with 5½ turns; according to the second, slightly less. However, and as a matter of fact, it is probable that some of this will have to come off. Our leads have not only distributed capacity, but also inductance; and this is impossible to calculate. We may also find it difficult to tune down to our theoretical minimum of 22,000 kilocycles; below 15 meters short waves begin to present special difficulties.

The accompanying tables of inductance, for different windings, are based on theoretical calculations and cannot be taken as practically accurate to the degree that a table of broadcast-wave coils is accurate. But it will be a guide to some extent; especially as the waves are longer.

With larger coils, the residual capacity of our circuit is somewhat larger. At 60 meters, our LxC figure is 1015; we may therefore figure on an inductance of 8.4. We shall require about thirteen turns. For 111 meters, the LxC is 3,500; about 27 turns, spaced 17 to the inch, are indicated. The highest band, reaching to the broadcast range, corresponds to an LxC maximum of, say, 11,500; and around 45 turns, spaced 33 to the inch, should cover this.

The minimum of each band, however, is less easily predicted at short wavelengths, because it is affected more by unpredictable circuit connections. Even with accurately calibrated condensers and uniformly wound coils, painstaking adjustment is usually necessary to make the dials of short-wave receivers track.

For the further information of our readers, we also republish the coil data of various well known sets and kits for comparison. The bands covered are approximated.

Inductance of Leads

For instance, straight wire has inductance; this increases in greater proportion than its length. Six inches of straight No. 26 wire has an inductance of about one fifth of a microhenry; 24 inches, 0.924-microhenry; 48 inches, 2.02 microhenries.

If we wind the 24 inches into six turns of a 1¼-inch coil (spaced 17 to the inch) we increase the inductance only to 1.57 microhenries; the 48-inch length with twelve turns will go up to 4.43 microhenries.

The presence of this extraneous inductance has its effect on the tuned circuits, which is considerable at the highest frequencies, and not easily predictable. The presence of parallel wires also increases high-frequency resistance.

"Skin Effect"

The last-named effect, which is due, like the lowered inductance explained before, to the internal flux in a wire driving the electrical current to the surface ("skin effect") is very great at the highest frequencies. For instance, the resistance of a piece of straight No. 18 wire at a radio frequency of 1,500 kc. (200 meters) is five times its resistance to direct current. At 12,000 kc. (15 meters) the resistance is nearly fourteen times as great.

TABLE VI

DESIGN OF COILS USED IN SHORT-WAVE RECEIVERS:

Pilot "Super-Wasp:" tuning capacities 160-mmf.(max.) in series with 01-mf., regeneration capacity 250 mmf.

Diameter of form, 1-3/8 inches.

Meters Covered (Approx.)	Antenna Coupler Turns	Detector Coupler Grid (spaced 1/8 in.)	Tickler
14.5-27.0	4½ No. 24 DSC	3½ No.24 DSC	4 No. 24 DSC
26.6-50.0	9½ " "	7½ " "	6 " "
48-100	20½ " "	17¾ " "	7 " "
100-200	46¼ " "	45¾ " "	15 " "

Hammarlund: for tuning capacities 125-mmf.; regeneration 100 mmf.

Diameter of form, 2 inches. Windings separated 1 turn.

Meters	Grid Coil Turns	Plate Coil Turns
14-24	3 No. 16 DSC	3 No. 16 D. S. C.
22-40	7 " "	5 " "
35-65	15 " "	6 " "
60-110	24 No. 18 "	12 No. 18 "

No. 16 wire spaced 11 turns to inch; No. 18, 17 turns. Variable primary of 6 two-inch turns, used with all coils, is 1 13/16 inches in diameter, hinged.

Silver-Marshall "Midget": for 140-mmf. tuning capacities.

Diameter of form 1 inch; primary (tickler) wound in slot. Forms threaded 39 turns to inch.

Meters:	Tuned Secondary Turns	Primary Turns
16-31	6½	5 2/3
30-57	13½	7 2/3
55-104	25½	12 1/3
103-195	46½	25 2/3

"Craft-Box" tube-base coils, home-made. Forms 1 3/8-inch. Tuning capacity 32-mmf. Regeneration capacity, same. Windings separated 1/8-inch.

Meters	Tuned Secondary Turns	Tickler Turns
18-25	7 No.28 DCC	7 No. 28 DCC
25-35	10 " "	10 " "
35-45	15 " "	14 " "
45-65	20 " "	18 " "
65-100	50 " "	60 " "

Small wire, however, shows this effect to a much lessened degree; the resistance of No. 36 wire has only doubled at 12,000 kc. This is in a straight length of wire; and the increased inductance of the coil increases even more the disadvantage of the larger wire, the interior of which carries comparatively little current. For this reason, in transmitting work on short waves, where it is necessary to have conductors capable of carrying heavy current of ultra-high frequency, tubes or ribbons are used instead of heavy wire.

The use of "Litz" wire (composed of many very fine wires, insulated from each other, and stranded) was at one time in vogue to overcome skin effect; but the best present-day coil construction, for the shorter waves, uses plain wire, with light insulation (enamelled or single silk) or even bare; but wound evenly on forms which it touches at as few points as possible, and well spaced from the supports, which are threaded to give accuracy of spacing

An additional table will be of interest, though more appropriate in connection with the preceding article: the number of turns of each gauge of wire which can be wound in an inch of space on the form, as determined by the insulation. The "bare wire" turns are given also, for the purpose of showing the comparative spacing of the conductors on a short-wave form. For instance, there are 50 turns of No. 24 bare wire in an inch; if it is wound 25 turns to the inch, the turns are spaced by their own width. The less insulation around the wire, if it is wound on a ribbed, highly-insulating form, the less the capacity of the coil. If the winding is protected, therefore, bare wire is better than enamelled, enamelled is better than single-covered, etc.

TABLE V

HALF-INCH FORM (Inductances in Microhenries)

No. of Turns on Coil	Number of Turns of Wire Per Inch 7	11	17	25	33	50
3	.086					
5	0.17	0.23				
7	0.25	0.36	0.48			
10	0.38	0.55	0.78	1.00		
15	0.59	0.88	1.28	1.73	2.06	
20		1.22	1.78	2.46	3.06	
25			2.24	3.19	4.0	5.4
30			2.87	3.96	5.0	6.9
40				5.43	6.5	9.8
50				7.10	9.0	12.8
60					11.0	15.6
75						20.4
100						28.4

TABLE VII

NUMBER OF TURNS OF WIRE PER INCH, WOUND CLOSE TOGETHER

Gauge	16	18	20	22	24	26	28	30	32	34	36	40
Bare Wire	20	25	32	40	50	63	79	100	126	159	200	317
Enamelled	19	23	29	37	46	57	74	90	112	141	178	270
Sing.Silk	18	23	29	36	44.	54	67	82	99	119	140	200
Silk Enam.	18	22	27	34	42	51	63	76	92	110	131	195
Doub.Silk	17	22	27	33	41	50	60	71	83	97	111	140
Sing.Cot.	17	21	26	33	40	48	59	70	82	95	108	139
Cot.Enam.	18	20	25	31	38	46	55	65	77	89	102	139
Doub.Cot.	16	19	23	29	34	41	47	54	60	67	74	102

L - C Tables

Table Showing the Relation of Wave Length, Frequency, and the Product of Inductance and Capacity, in Oscillatory Circuits.

λ Wave length meters	*f* Multiply values below by 1000	ω Multiply values below by 1000	*CL* C in μf L in cm
1	300000	1884000	0.0003
2	150000	942000	.0011
3	100000	628000	.0018
4	75000	471000	.0045
5	60000	377000	.0057
6	50000	314200	.0101
7	42900	269000	.0138
8	37500	235500	.0180
9	33330	209400	.0228
10	30000	188400	.0282
15	20000	125600	.0635
20	15000	94200	.1129
25	12000	75400	.1755
30	10000	62800	.2530
35	8570	53800	.3446
40	7500	47100	.450
45	6670	41900	.570
50	6000	37700	.704
55	5450	34220	.852
60	5000	31420	1.014
65	4620	28970	1.188
70	4290	26900	1.378
75	4000	25120	1.583
80	3750	23520	1.801
85	3529	22120	2.034
90	3333	20920	2.280
95	3158	19830	2.541
100	3000	18840	2.816
105	2857	17940	3.105
110	2727	17130	3.404
115	2609	16380	3.721
120	2500	15710	4.05
125	2400	15070	4.40
130	2308	14480	4.76
135	2222	13950	5.13
140	2144	13450	5.52
145	2069	12980	5.92
150	2000	12560	6.34
155	1935	12150	6.76
160	1875	11770	7.20
165	1818	11410	7.66
170	1765	11080	8.13
175	1714	10760	8.62
180	1667	10470	9.12
185	1622	10180	9.63
190	1579	9910	10.16
195	1538	9660	10.71
200	1500	9420	11.26
205	1463	9190	11.83
210	1429	8970	12.41
215	1395	8760	13.01
220	1364	8560	13.62
225	1333	8370	14.25
230	1304	8190	14.89
235	1277	8020	15.55
240	1250	7850	16.22
245	1225	7690	16.90
250	1200	7540	17.60
255	1177	7390	18.31
260	1154	7250	19.03
265	1132	7110	19.77
270	1111	6980	20.52
275	1091	6860	21.29
280	1071	6740	22.07
285	1053	6620	22.87
290	1035	6500	23.66
295	1017	6380	24.50
300	1000	6280	25.33
310	968	6080	27.05
320	938	5890	28.83
330	909	5700	30.66
340	882	5540	32.55
350	857	5380	34.48
360	833	5230	36.48
370	811	5090	38.54
380	790	4953	40.7
390	769	4830	42.8
400	750	4710	45.0
410	732	4590	47.3
420	714	4480	49.7
430	698	4380	52.0
440	682	4280	54.5
450	667	4190	57.0
460	652	4100	59.6
470	638	4010	62.3
480	625	3920	64.8
490	612	3842	67.6
500	600	3766	70.4
510	588	3692	73.3
520	577	3620	76.0
530	566	3552	79.0
540	556	3485	82.1
550	545	3422	85.2
560	536	3361	88.4

Table Showing the Relation of Wave Length, Frequency, and the Product of Inductance and Capacity, in Oscillatory Circuits—Continued.

λ Wave length meters	*f* Multiply values below by 1000	ω Multiply values below by 1000	*CL* C in μf L in cm
570	526	3302	91.4
580	517	3246	94.7
590	509	3193	98.0
600	500	3140	101.4
610	492	3088	104.7
620	484	3038	108.2
630	476	2990	111.7
640	469	2942	115.4
650	462	2896	118.8
660	455	2852	122.5
670	448	2810	126.3
680	441	2768	130.2
690	435	2730	134.1
700	429	2692	137.8
710	423	2654	141.9
720	417	2616	145.9
730	411	2580	150.0
740	405	2544	154.0
750	400	2510	158.3
760	394.8	2476	162.6
770	389.6	2443	166.8
780	384.6	2412	171.4
790	379.8	2382	175.6
800	375.0	2353	180.1
810	370.4	2325	184.7
820	365.9	2297	189.3
830	361.4	2270	194.0
840	357.1	2242	198.5
850	352.9	2214	203.4
860	348.8	2188	208.2
870	344.8	2162	213.2
880	340.9	2138	217.9
890	337.1	2115	222.9
900	333.3	2092	228.0
910	329.7	2070	233.2
920	326.1	2047	238.1
930	322.6	2024	243.4
940	319.1	2003	248.7
950	315.8	1982	254.1
960	312.5	1962	259.5
970	309.3	1942	264.7
980	306.1	1922	270.4
990	303.0	1902	275.9
1000	300.0	1884	281.6
1050	285.7	1794	310.5
1100	272.7	1712	340.4
1150	260.9	1637	372.1
1200	250.0	1570	405
1250	240.0	1506	440
1300	230.8	1448	476
1350	222.2	1395	513
1400	214.4	1346	552
1450	206.9	1298	592
1500	200.0	1256	634
1550	193.5	1215	676
1600	187.5	1177	720
1650	181.8	1142	766
1700	176.5	1108	813
1750	171.4	1076	862
1800	166.7	1046	912
1850	162.2	1017	963
1900	157.9	990	1010
1950	153.8	965	1071
2000	150.0	942	1126
2050	146.3	920	1183
2100	142.9	898	1241
2150	139.5	876	1301
2200	136.4	856	1362
2250	133.3	838	1425
2300	130.4	819	1489
2350	127.7	801	1555
2400	125.0	784	1622
2450	122.5	768	1690
2500	120.0	753	1760
2550	117.7	738	1831
2600	115.4	724	1903
2650	113.2	710	1977
2700	111.1	697	2052
2750	109.1	684	2129
2800	107.1	672	2207
2850	105.3	660	2287
2900	103.5	648	2366
2950	101.7	638	2450
3000	100.0	628	2533
3500	85.7	538	3448
4000	75.0	471	4500
4500	66.7	418	5700
5000	60.0	377.	7040
5500	54.5	342.2	8520
6000	50.0	314.2	10140
6500	40.2	289.8	11880
7000	42.9	268.8	13780
7500	40.0	251.0	15830

R. F. Coil Design

Some Notes on Calculating R.F. Coil Resistance

When the screen-grid type of tube was first introduced to the American market, it was believed that poor selectivity was an inherent part of its action. However, as design engineers became more experienced in its use, it was found that the apparently poor selectivity was due to the greater amplification per stage and to the constants of the parts used in the early sets. Later, band-selectors were employed to give the desired selectivity and constants were used which equalized the amplification over the entire broadcast band.

It is well known that the band-selector causes an appreciable reduction in the R.F. amplification, as well as requiring very careful adjustment; all of which results in an increase in the costs of production. With this point in mind, the writer set out some time ago to find a suitable means for obtaining sufficient selectivity without the use of band-selectors. This was not done with the idea of detracting from the use of such tuning devices, but rather to find a means of reducing the cost of making sets in production without sacrificing either amplification or selectivity.

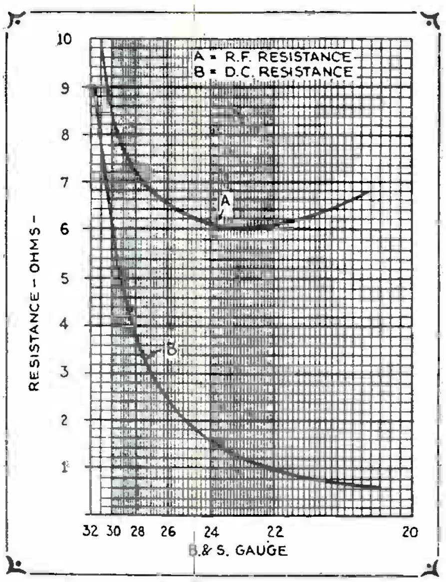

Fig. 1

Note that for the smaller gauge wire the A.C. resistance of a coil may be several times its D.C. resistance.

Increasing the R. F. Gain

After some deliberation, it was decided that the most logical point of attack was in the R.F. grid coils. The results obtained by redesigning the coils in several trial sets were so gratifying that it was decided that others might find the information useful. The following notes made at the time deal entirely with the secondary coils. Later, perhaps, we will discuss some changes in the primary coils, especially the primary of the antenna coupler.

The amplification obtainable in an R.F. amplifier depends primarily on the ratio of the inductance to the capacity multiplied by the resistance (of the coil); expressed mathematically, $\frac{L}{CR}$, and it is evident that the greater the inductance compared to the capacity and coil resistance, the greater the amplification that may be realized. As the size of the inductance (L) is limited both by the maximum wavelength to be received,

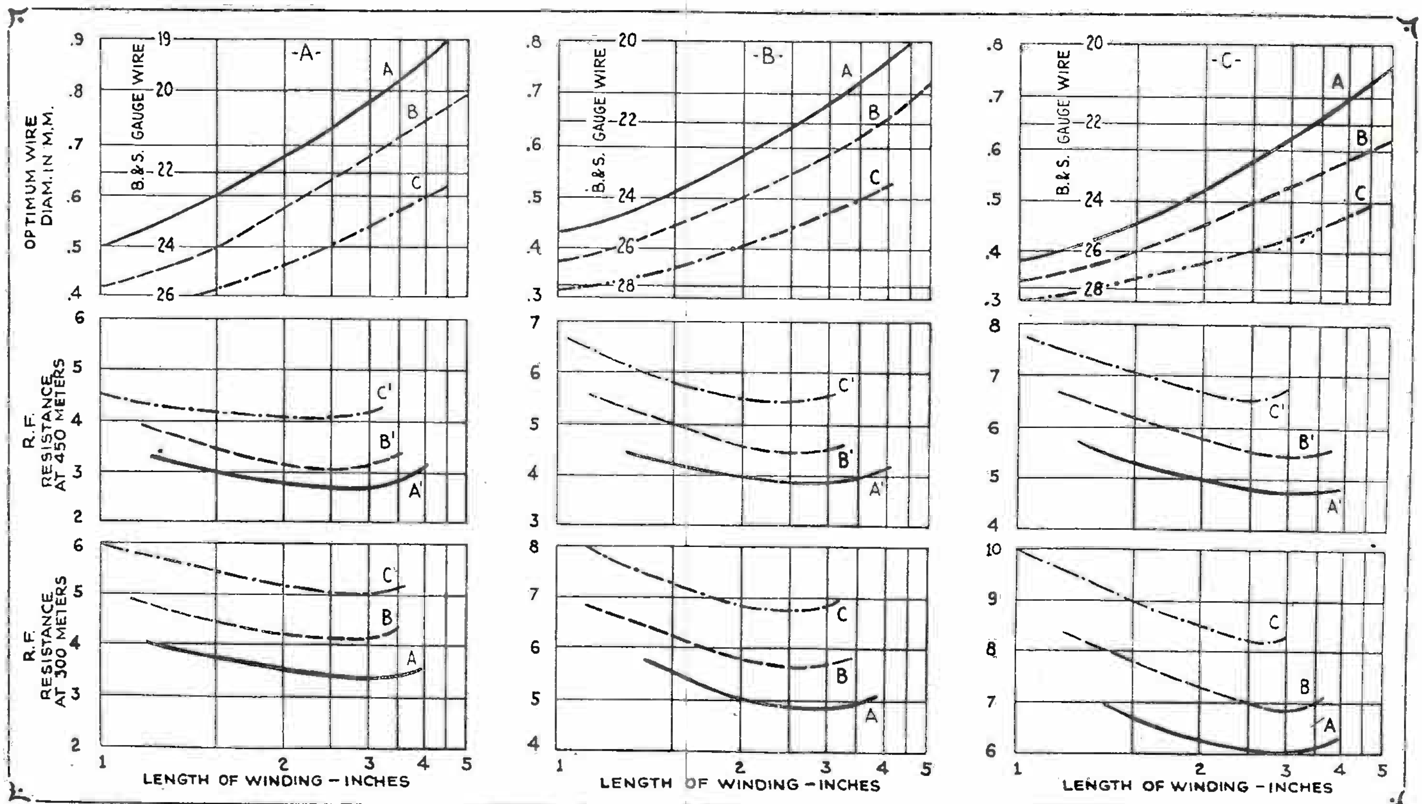

Figure 4, upper row. The curves A, B, and C indicate the optimum size wire for various winding lengths, inductance and coil diameters. Curves A, B, and C are coils 3 ins., 2½ ins., and 2 ins. in diameter, respectively. The three rows A, B, and C are for coils of different lengths; A to be used with .0005-mf. tuning condensers, B with .00035-mf., and C with .00025-mf. condensers.

Figure 5, center. The R.F. resistance of coils of various winding lengths, inductance, and diameters, is shown, taken at 450 meters.

Figure 6, lower. The R.F. resistance of coils of various winding lengths, inductance, and diameters, taken at 300 meters, is illustrated.

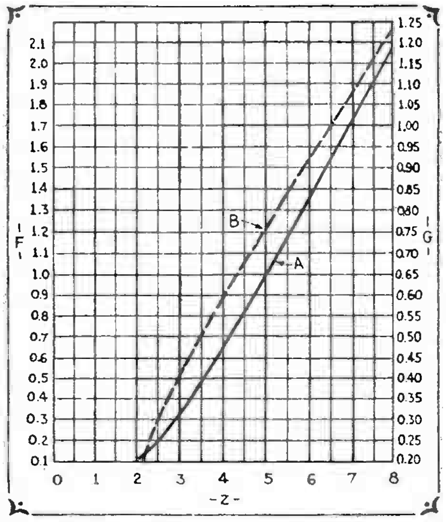

Fig. 2

The values of F and G corresponding to curves A and B may be determined from this graph.

and the size of the tuning condenser (C), it can be readily seen that reduction of the coil resistance (R) must result in an increase in the amplification. Thus it will be found that to cover the broadcast band, 340 millihenries is the maximum permissible inductance that may be used with a .00025-mf. tuning condenser; and even then, either very loose coupling (between primary and secondary), or an antenna series condenser, is needed to tune below 250 meters,—because of the effect of the capacity of the antenna.

If the coil resistance (R) in the above ratio was the *direct current* resistance of the coil it would be a simple matter to reduce it merely by increasing the size of the wire. But Fig. 1 shows that there is a point beyond which the *radio frequency* resistance increases with a further increase in the wire size. The curves in this figure were made from data obtained with a coil of 74 turns of No. 24 wire, wound on a form 3 inches in diameter and 2¼ inches long.

Finding R.F. Resistance

The R.F. resistance was calculated from Butterworth's formula:

$$R1 = R \left\{1+F+G\left(\frac{Knd}{2D}\right)^2\right\}$$

in which R1 is the R.F. resistance of the coil, in ohms; R, the D.C. resistance of the winding, also in ohms; n, the total number of turns; and d, the diameter of the wire in the same units as D, the diameter of the coil. Both F and G are factors proportional to:

$$Z = \frac{d\sqrt{f}}{92.8}$$

where f is the frequency at which the coil is to be used and d, the diameter of the wire in millimeters. K is the shape factor, which depends upon the length and diameter of the winding. The values of F, G, and K are shown graphically in Figs. 2A, 2B, and 3, respectively.

As an illustration of the procedure used in calculating the R.F. resistance of a coil, the example cited above may be used.

The wire is .565-millimeter in diameter (determined from a wire table); and a wavelength of 300 meters (1,000,000 cycles) will be used. The D.C. resistance of the wire is .0214-ohm per foot. The linear figure for 74 turns of this wire wound on a form 3 ins. (0.25-foot) in diameter equals 0.25 x 3.1416 x 74 = 58.1 ft.; therefore, the D.C. resistance of the coil (R) is 58.1 x .0214 = 1.24 ohms.

$$Z = \frac{.565\sqrt{1,000,000}}{92.8} = 6.09$$

Then, by referring to the "F" curve in Fig. 2, F = 1.43; and from the "G" curve in Fig. 2, G = .948. The ratio of coil length to the diameter is $\frac{2.25}{3}$ or 0.75 and,— that is, referring to Fig. 3, K = 5.9; n = 74; d = 0.565, D = 3 inches or 76.2 mm.

From the above figures, the factor $\frac{Knd}{2D} = \frac{5.9 \times 74 \times .565}{152.4} = 1.62$. When this figure is squared, the result is found to be 2.64. Then, R1 = 1.24 (1 + 1.43 + 0.948 x 2.64) = 6.11 ohms, which is the radio frequency resistance of the coil.

Finding Coil Inductance

Returning to the actual design of the coil, we find that the inductance must be determined.

This is readily calculated from the formula $L = \frac{W^2}{3,553,225\ C}$, in which L is the inductance in millihenries; W, the wavelength in meters; and C, the total capacity in microfarads (this really includes the capacity of the tuning condenser in parallel with the coil, the capacity of the coil itself, the stray capacities of the circuit, and the antenna capacity; for practical purposes, however, the capacity of the tuning condenser alone may be used).

The inductance of the coil must be calculated for both the maximum and the minimum capacity of the tuning condenser used. If the two calculations give the same figure, the result may be accepted as correct. If the value of inductance for the longest wavelength is smaller than the value for the shortest wavelength, the average of the two should be used; but if the inductance for the longest wavelength is greater, then the size of the tuning condenser is too small, and a larger size capacity must be substituted. Different sizes of C should be tried until the value of L is the same in both cases.

For a given value of inductance, the required number of turns is

$$n = \sqrt{\frac{1000\ L}{SD}}$$

in which S is the shape factor shown in Fig. 3; and D, the diameter of the coil in centimeters. The results obtained by the writer for several sizes of coils from 2 to 3 inches in diameter are shown in the graphs of Figs. 4, 5, and 6. The curves of these figures are plotted for coils of three diameters; curve A, 3 ins., B, 2½ ins., and C, 2 ins. The charts of Fig. 4 in each case (for different condenser capacities, as shown) give the optimum or most desirable diameter of the wire in millimeters, and the corresponding size in B & S gauge. The charts of Figs. 5 and 6 indicate the comparative

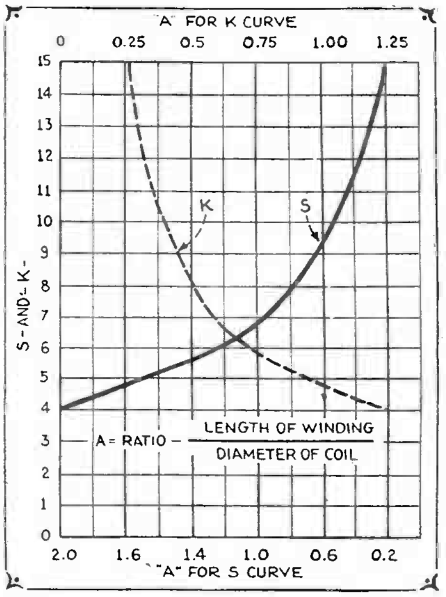

Fig. 3

The values of K and S used in the calculations may be taken directly from the curves.

resistance of the windings, at 450 meters and 300 meters.

Wire Insulation

The optimum diameters indicated in these charts are for bare wire. If insulated, the covering may be used as a spacer between turns. The use of enameled wire, wound on a grooved form for spacing, increases the high frequency resistance about 20% over bare wire; with silk insulation as a spacer, the resistance is increased about 30%; and the use of cotton adds 40%, or more. Since the resistance which results when silk and cotton insulation are used is partially caused by moisture, it can be reduced somewhat by baking the coils and then coating them with amyl acetate, or some similar compound.

These charts show that the lowest R.F. resistance is obtained when the coil diameter is largest. Practical construction requirements, however, limit the coil to small dimensions, — especially if shielding is used. An increase in the diameter of the coil produces an increase in the size of the magnetic field and because of this, the shielding dimensions would require to be increased to impractical proportions. On the other hand, the R.F. resistance of the coil increases rapidly as the diameter is reduced below 2 inches.

Coil Dimensions

The writer has found that for broadcast frequencies, the lowest practical R.F. resistance is obtained when the length of the winding is about 1¼ times the diameter. The best all-round results were obtained in the experimental sets mentioned above with the coils about 2½ ins. in diameter and a winding length of 3 ins. The shields were 7 ins. high, and sufficiently large in diameter to allow a space of 1¼ ins. on each side of the coils.

While the size of the shield cans described may be larger than those usually employed in receivers today, the difference in the operation of a receiver with the redesigned coils and sufficiently large shields in most cases will be a revelation.

When it is desired to determine the size inductance for only one or two coils, the most desirable, or optimum diameter for the wire may be determined by constructing a resistance curve similar to that shown in Fig. 1. After the formula has been solved for one diameter of wire, it is unnecessary to work out all the factors again, for each new wire size. The D.C. resistance of wire varies inversely as the square of the diameter: if the diameter is reduced to one-half, the resistance is four times its original value; and if the diameter is doubled, the resistance is reduced to one-quarter of the original value. From this it is readily seen that the new value of R in the formula may be very easily determined.

The factor Z in the equation varies directly as the diameter of the wire; it would be doubled if the diameter were doubled. The new values of F and G in the formula may be read from the new figure for Z. The factor $\left\{\frac{Knd}{2D}\right\}^2$ in Butterworth's equation varies directly as the *square* of the wire diameter; thus if the diameter were reduced to one-half, the factor would be one-fourth.

Plotting a Curve

By guessing the likely optimum value for the wire size, then working out Butterworth's formula for this value and, finally, varying the factors in the formula for two or three different sizes of wire both larger and smaller than the original, a sufficient number of points may be secured with which to plot a curve similar to Fig. 1. The lowest value of R.F. resistance will then indicate the most suitable size of wire to use.

When selecting the wire size from the curve thus constructed, it is advisable to use a wire gauge only slightly larger than the optimum. The reason for this statement is the fact that although the resistance is increased only slightly, the self-capacity of the coil is increased noticeably, thus causing an increase in the coil losses. The increase in the self-capacity also increases the minimum wavelength to which the circuit will tune, necessitating a reduction in the number of turns on the coil.

In conclusion, it might be stated that the charts of Figs. 2 and 3 have been checked by the figures obtained from a number of coil samples tested with a vacuum tube voltmeter. They were found to be accurate within the stated limits.

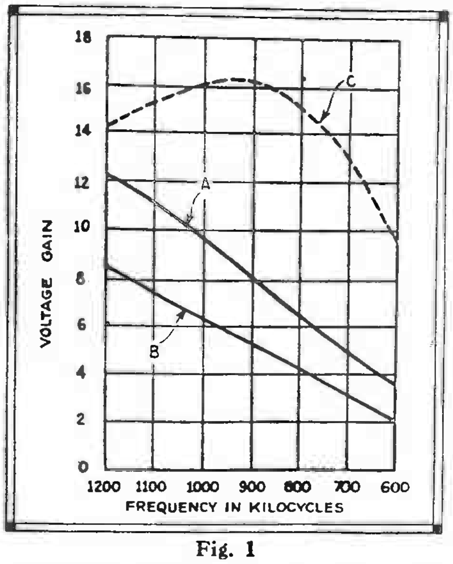

Fig. 1

The dotted curve illustrates the response of a typical close-coupled primary. At A and B, the same transformer with reduced coupling.

R. F. COIL PRIMARIES

In the following discussion are given some hints on the design of coils for the screen-grid, variable-mu and, especially, for the new R.F. pentode which is destined to find its way into most of the new commercial sets.

Aerial Coupling

First, we will consider the coil coupling the aerial to the first tube. The main problems in the design of this type of coil are:

1. Elimination of cross-talk.
2. Reduction of aerial capacity reaction causing the aerial circuit to tune differently than other circuits.
3. Development of a system with fair selectivity and with a satisfactorily even step-up over the band of frequencies.

The phenomenon of "cross-talk" has become more evident with the increase in R.F. gain resulting from improvements in vacuum tubes. It is a form of interference in which a station may be tuned in on one or more carriers (stations) other than its own channel. It is different from the usual interference (due to broad tuning) as it is generally noticed only in the proximity of powerful local stations which deliver a large input to the receiver. If this interfering carrier reaches the grid of the first tube, it is amplified in the usual manner, but, at the same time, partial rectification occurs and this rectified signal in the plate circuit modulates the carrier to which the set is tuned, thus producing the cross-talk.

The variable-mu tube with its automatically adjusted mutual-conductance characteristic reduces this interference to a very small factor, but it is not always desired to use these tubes in a set (for example, in certain commercial receivers).

There are two general methods of overcoming the difficulties outlined above. As transformer methods of aerial coupling are the most satisfactory for general use in reducing cross-talk, both methods explained below employ inductive coupling.

The capacity reaction of the aerial is also best overcome by a correctly designed aerial-coupling transformer; and the third point of even voltage step-up is a problem of correct primary-coil design in the aerial coupler.

Spaced Primary

The method generally employed is to use a primary of very low impedance (5 to 20 turns) coupled very closely to the secondary. Fig. 1 shows the voltage gain of a typical coil of this variety with a coupling coefficient of about 40%. This tight coupling, however, is very unsatisfactory on the high-frequency end of the band. In the first place, the antenna loading effect reflected on the secondary is so great that difficulty is encountered in tuning down to 1500 kilocycles. In the second place, the loading due to the aerial and the dielectric losses between primary and secondary are so great that the first stage tunes very broadly, making it necessary to reduce the coupling by tapping the primary or by using an antenna series-condenser.

The transformer used in Fig. 1 consists of 80 turns of No. 30 wire space-wound on a 2½-in. tube with a primary of 20 turns wound directly over the secondary with a layer of insulating paper between. The gain falls rapidly below 850 kc. due to a reduction in the voltage transfer. Above 1000 kc., the gain also drops due to antenna loading and dielectric loss. The gain of this transformer is very uneven and, in addition, the selectivity is exceedingly poor (90 kilocycles at 1200 kc.).

A reduction of the coupling coefficient to about 10% overcomes the above disadvantages as shown in the curve A of Fig. 1. Although the gain drops considerably, the selectivity is increased to 42 kc. at 1200 kc. which is quite satisfactory. In a receiver developing sufficient R.F. amplification, the coupling may be further reduced (Fig. 1B).

The coil used for obtaining curves A and B consists of a secondary of the same size as the dotted one, but the primary is spaced ⅛-in. away from the secondary coil and is wound on the smallest convenient amount of insulation. The primary in curve A contains 10 turns of No. 30 wire closely wound; that in curve B contains 6 turns.

High-Impedance Primary

The second method of aerial coupling which answers the requirements is one which has been developed recently and is being used with much success in some of the newer receivers. As in the first case, it is a transformer method of coupling; but, unlike the first, it contains a primary of considerable impedance. This primary is adjusted to a frequency just below the lowest to be received; i.e., below 550 kc. Very loose coupling of the order of 10% is employed. The aerial reaction reduces the effective secondary inductance but, owing to the very loose coupling, it is of very small magnitude. The gain in this arrangement decreases as the frequency increases but, as we will find later (due to the falling characteristic with an increase of frequency in interstage couplers), this is a very desirable condition.

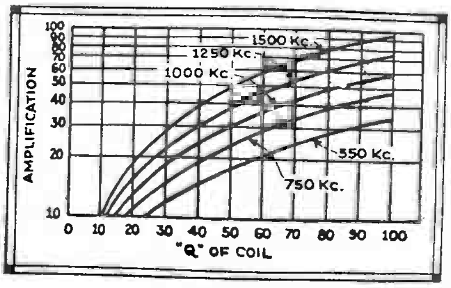

Fig. 3

Response of an R.F. circuit at different frequencies and for coils of various "Q's."

An aerial coupler of this type consists of a coil of about 380 turns of No. 36 S.C.C. wire, wound jumble fashion in a spool-shaped form as shown in Fig. 2. The form is ½-in. in diameter and the complete spool is mounted at the grounded end of the secondary. The latter coil is made as explained in the article in the December, 1931 issue of RADIO-CRAFT.

Interstage Coupling

The problems encountered in coupling one tube to another are quite different than for aerial coupling. Some of the main requirements are as follows:

1. A coil which will produce a high degree of coupling without loading the secondary circuit excessively.
2. A circuit arrangement which will result in a high primary impedance, so that the high amplification of the screen-grid and pentode tubes can be realized.
3. Development of a system which will produce satisfactorily even amplification over the frequency band.

While the screen-grid, variable-mu and R.F. pentode tubes are capable of yielding a very high amplification of a signal voltage, it is not practical to utilize the full gain for several reasons. In the first place, the shielding effect of the screening grids is not completely effective. A small capacity still exists between the control-grid and the plate which allows a feed-back of current from plate to grid when the signal voltage is increased to a high factor.

In addition, it is extremely difficult to produce effective shielding in a radio frequency amplifier with such capabilities, and the combination of tube feed-back with this external coupling permits the tubes to oscillate above a certain amplification level. As this effect is cumulative, increasing rapidly as the number of tubes and tuned circuits is increased, the maximum amplification per stage must be reduced about 20% for each R.F. tube over two. In commercial practice, it is not practical to utilize more than one-half the maximum rated tube amplification.

The actual gain in an R.F. amplifier depends on the resistance of the tuned circuit (known as the "Q" of the coil), the degree of coupling between the primary and secondary, and the mutual conductance of the tube. The value of the coil's dissipation value "Q" mentioned above is equal to

$$\frac{6.28 \times f \times L}{R2}$$

where f is the frequency in kilocycles, L the inductance in millihenries, and R2 the R.F. resistance of the secondary tuned circuit. As we can readily see from this formula, the lower the resistance of the secondary, the higher will be the efficiency of the tuned circuit. However, this is dependent more on the design of the secondary coil than the primary and, for illustration purposes, we will assume that we have a coil with a "Q" of about 90 to 100. Then from Fig. 3, we can see that if the coupling between the primary and secondary is kept constant, the amplification will not be equal for various frequencies, but will increase as we tune to a higher frequency

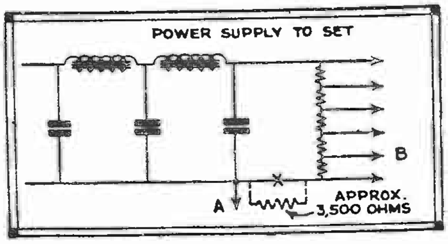

Fig. 7

Changes in the power supply necessary to control volume with variable-mu tubes.

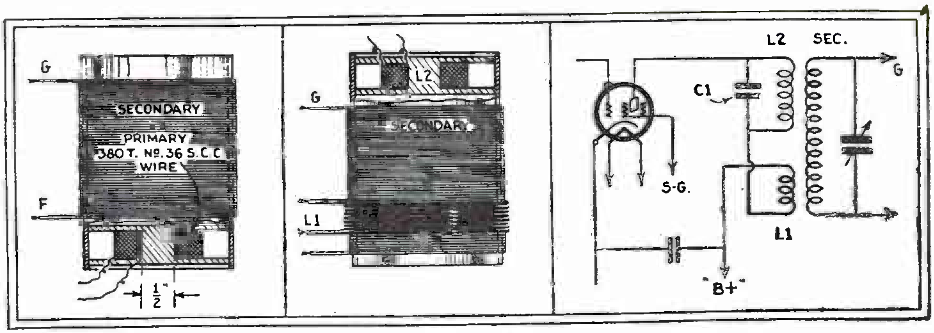

Fig. 2, left. *Location of the primary in a high-impedance type R. F. transformer.*
Fig. 5, center. *Arrangement of the primaries in a "flat top response" transformer.*
Fig. 4, right. *Diagram of connections of the multiple primary transformer.*

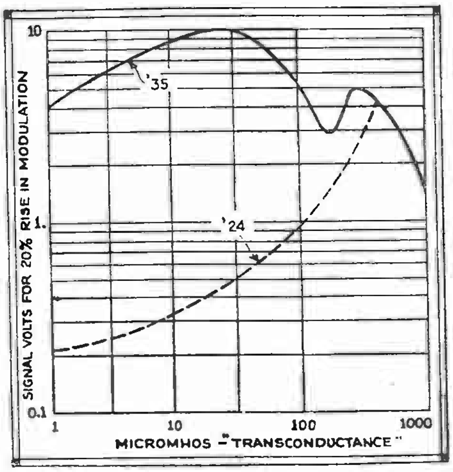

Fig. 6

Maximum allowable input voltage of a '35 compared to a '24, for 20 per-cent modulation rise.

This effect which is pictured for a single stage increases as the number of stages is increased. Thus we can see that we are limited in the amplification that we can obtain (by the oscillation), and in the number of tubes we can use (by the frequency factor).

A number of methods have been suggested and used to overcome the latter difficulty. One is to use a "cam" arrangement on the tuning condensers, introducing a small capacity into the circuit to increase the coupling. Another is to employ capacity coupling between the tubes. Still another is to move the primary coil in conjunction with the tuning condensers to vary the coupling and reduce the amount of amplification at the higher frequencies.

One method which appeals to the writer as being the most logical presented to date is to use a primary circuit which is balanced, so that part of the primary having a large self-inductance is not effective at the higher frequencies; in this manner, the coupling is automatically adjusted to even the amplification.

The above system is explained as follows; two primary coils are used, one coupled to the grounded end of the secondary coil in the usual manner as shown in Fig. 4. Another coil, shunted by a condenser, is coupled to the grid end of the secondary coil and the two primaries are connected so that they are opposing or bucking each other. Now suppose we tune to a long wavelength or low frequency—the first primary coil L1 has very little effect because it is made purposely small. On the other hand, the second primary coil L2 is closely coupled to the secondary and the signal is transferred through this medium. This primary is quite large and comparatively closely coupled to the secondary, so that a large coupling exists.

As the frequency is increased, more and more difference exists between the resonant frequency of the primary and that of the secondary, resulting in L2 having less and less effect. However, the first primary becomes more effective as the frequency increases and, as this coil is comparatively small, the amplification is not as great as it was at the low-frequency end of the band. At the high-frequency end of the band, the primary coil L2 would ordinarily act as a choke coil and prevent L1 from functioning, so a condenser C1 is shunted across L2 to act as a bypass for the signal voltage; the circuit L2-C1 is tuned to a frequency just below the lowest frequency to be received.

The constants of a coupling coil of the type described above are as follows (as the system is rather complicated, the values given apply only to the example and correct requirements must be found by varying the coupling of the two primaries until the desired results are achieved): the secondary is the same as that described for the aerial coupler of Fig. 1; the first primary L1 is wound over the grounded end of the secondary with suitable insulation between and contains 25 to 50 turns of No. 34 or 36 wire, depending on the number of tubes to be used; the second primary L2 is wound in a spool-like form ½-in. in diameter and ¼-in. wide and is inserted in the grid end of the secondary coil, it being jumble wound and contains 450 turns of No. 36 D.S.C. wire; the condenser C1 is a small condenser of 35 mmf.

A cross-section of the coil arrangement

is illustrated in Fig. 5.

Screen-Grid Tubes

In this discussion, we promised to consider the problems of designing primary coils for screen-grid, variable-mu, and R.F. pentode tubes. Up to this time, we have considered them as a group as the coil requirements are very similar in each case. There are, however, some peculiarities which must be considered for each type.

In the screen-grid tubes with which we are most familiar, the shielding grid is placed between the control-grid and the plate in order to remove those electrons which make up the well-known "space charge." This shield grid reduces the internal capacity to a very small value, but it does not entirely eliminate it. Consequently, if the signal voltage is stepped up to a sufficiently large value, some current will return over this internal tube capacity and start the tube to oscillate. Also, as explained before, it is extremely difficult to shield the external circuits in the space permitted by present-day commercial design. Therefore, the amplification per stage is effectively limited, even when the frequency factor is removed.

For the above reasons, it is well not to try to obtain too much amplification from these tubes. This does not mean that a tremendous amplification cannot be built up; it is quite practical to obtain an amplification of 30 or 40 per stage compared to 5 or 6 for ordinary three-element R.F. tubes.

Variable-Mu Tubes

The individual problems of coil design for this new tube are very similar to those for the '24 screen-grid tubes. The main differences in the characteristics of the two types are that the modulation distortion and cross-talk factors have been reduced considerably in the newer tubes. As these two factors indirectly affect the coil design, we shall consider them briefly.

Modulation distortion is caused by the non-linear character of some tubes. Because of this non-uniformity of frequency amplification, an increase in modulation is found at certain frequencies. This distortion is most evident when the incoming signal is a powerful one, as in the last R.F. tube. Fig. 6 shows the maximum value of the input voltage that can be employed without allowing the modulation to exceed 20% (a satisfactory value). This chart shows that the maximum voltage that can be applied to the '24 tube cannot exceed 0.4-volt while the variable-mu tube can carry a voltage of 10 without introducing any more distortion.

So much for modulation distortion. We have already mentioned cross-talk as a serious handicap in aerial coil design. Because of the inherent characteristics of the variable-mu tubes, however, this factor has been reduced several hundred times and this, combined with the ability to handle powerful input voltages, improves amplifier design tremendously.

The coils for variable-mu interstage coupling are practically the same as for the screen-grid tube. However, with careful shielding between stages, more amplification per stage can be realized than with the '24 type. By increasing the size of the first primary L1 in the coil described above and placing the second primary L2 closer to the secondary, an increase in the coupling can be obtained and, by carefully adjusting the balance, the amplification can be kept even.

Although the following description is somewhat apart from the subject of this article, the writer has decided that it will be of assistance to those who try to use these tubes. The variable-mu tube can be placed in almost any R.F. amplifier designed for '24 tubes, with better tone quality and less cross-talk. However, to obtain the greatest value from these tubes, several circuit changes are suggested. The volume should be controlled by varying the control-grid voltage instead of the screen-grid potential as advocated for the '24 tubes. The maximum amplification is achieved with a negative bias of 3 volts on the control-grid and the minimum with -50 volts.

To obtain this high grid bias, the power supply circuit must be changed somewhat. Fig. 7 shows the necessary changes to obtain the variable potential. A 3500-ohm (approximate) resistor is connected at point X of the circuit to introduce a voltage of 50 between the voltage divider and the grounded circuit. Then a potentiometer of 20,000 ohms connected between the 50-volt and the 3-volt points, A and B, respectively, will permit a variation of 3 to 50 volts. The center arm of this potentiometer is connected to the grid return.

R.F. Pentode

Because of the greater mutual conductance of the tube, higher amplification can be obtained than is possible with the '24 tube. However, the grid-plate capacity of this new tube is larger than that of the latter tube and this necessitates much care in shielding the individual stages, as well as isolating each grid and plate from those of other tubes by the use of chokes, condensers, and resistances.

The problem of coil design is one of balancing the characteristics of the primary circuit in the same manner as that described for the variable-mu tube, above.

While this description of R.F. primary-coil design has been somewhat sketchy in places, the subject makes it necessary to cover a large number of facts and it is hoped that sufficient detail has been given to the important points.

SIMPLIFIED COIL CALCULATION

THE archaic method of calculating inductances involves a formula taking into account, not only the actual dimensions of a winding and the number of turns of wire, but a form factor "K" dependent upon the ratio of length to diameter of the form the coil is wound. While these formulas are no doubt, accurate to a minute degree in capable hands, the errors possible are manifold; and rarely, if ever, does a coil so designed come within a reasonable degree of the desired inductance.

A considerable simplification of the design problem was evolved several years ago by Harold A. Wheeler of the Hazeltine Laboratories, who is responsible also for the multiplex detector and automatic volume control used by Philco, Fada, and other Hazeltine licensees.

In the illustrations, herewith, three types of windings, which cover practically every case within the needs of the experimenter or Service Man in his daily work are shown. First, we have a multi-layer winding, such as might be employed in the intermediate-frequency transformers of a superheterodyne receiver. Second on the list is a simple solenoid of the type used in the tuned circuits of broadcast receivers. The last is a helical (spiral) winding such as might be used either as a coupling coil in a band selector, as an antenna coupling coil, or as a primary winding for an R.F. transformer. The equations for calculating the inductance are given with each sketch. All dimensions are to be taken in inches and the answer will be obtained directly in microhenries.

The method compares quite favourably with Nagaoka's formula as to accuracy, and is many times easier to use than the older method, in which the form factor had to be taken into account. Accuracy to 1% is obtainable in the case of the multi-layer coil, when the three terms in the denominator (below the line) are nearly equal. The accuracy in the case of the simple solenoid is also to 1% when the length of the winding is greater than four-fifths times the diameter. In the third case, this degree of accuracy is obtainable when the dimension "c" is greater than one fifth the dimension "a".

In no case will the error be greater than is possible with the more tedious method formerly used, when the most exacting care is taken. All that is necessary for the calculation of inductance values is a ruler, a pencil and a copper wire table giving the diameter of various wire sizes, so that the space occupied by a given winding may be known.

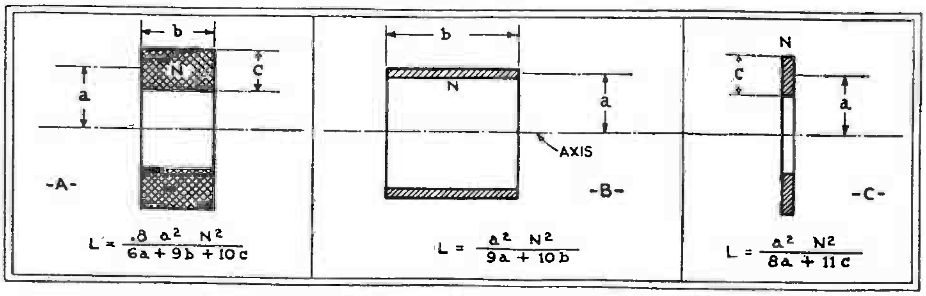

$$L = \frac{.8\ a^2\ N^2}{6a + 9b + 10c}$$

$$L = \frac{a^2\ N^2}{9a + 10b}$$

$$L = \frac{a^2\ N^2}{8a + 11c}$$

The Design of Power Transformers

With tables and charts for the easier finding of wattages, voltages, number of turns, wire sizes, etc.

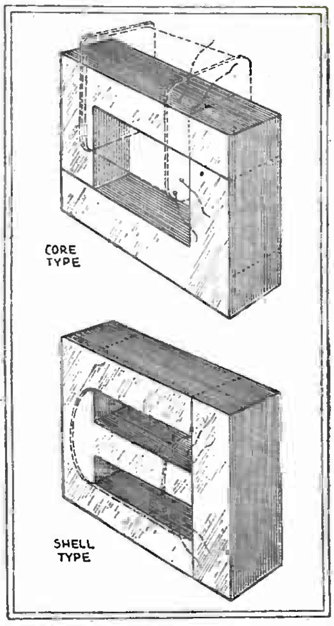

Fig. 1
The "core" type of transformer is the easiest to make; the "shell" is more efficient.

WHEN, some time ago, the writer first thought of preparing an article on the design and construction of transformers for the power supply of radio receivers, some doubts arose regarding the usefulness of such a collection of data. However, on making a survey among a number of Service Men, it was found that a great deal of interest would be shown in the actual details, without too much mathematics.

For this reason, a number of tables and charts have been developed from the usual transformer formulas. (Trial coils have been made, to verify the results.) In this way, much tiresome calculation has been eliminated; and, since the charts cover a wide range of power requirements, it is felt that the construction of the transformers commonly used for power-supply purposes has been covered. The usual description of the theory of operation has been dispensed with, since it is assumed that the reader is familiar with these fundamentals.

In general, two types of transformers are in use; both are shown in Fig. 1. The "core" type of construction is the more convenient to assemble; the "shell" type is more compact.

Determination of Wattages

It is customary to rate transformers in watts; the wattage required for the operation of a radio receiver may be determined with the aid of the first tables. Table I gives the filament currents and wattages drawn by standard tubes, not forgetting the consumption of current by the center-tapped resistors. From this the current drawn by each low-voltage secondary winding may be determined; including that for the rectifier.

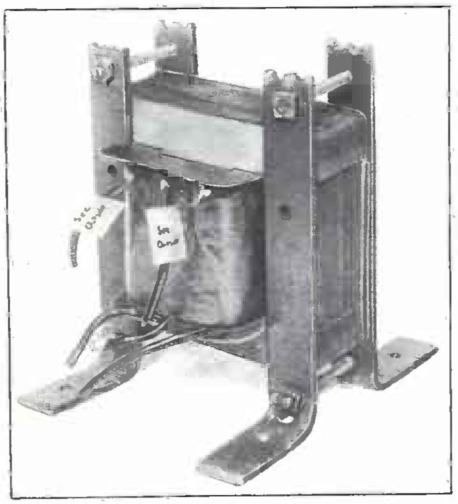

Fig. A
The "shell" type transformer above has been insulated with empire cloth between windings. It is highly efficient.

In addition to this, there is the high-voltage winding which supplies, through the rectifier, direct current to the plates, screen-grids, etc., of the set. The general needs of the receiver may be determined by adding together the plate wattages of the different tubes (see Table II, which takes into consideration the drop of voltage through grid-biasing resistors) and the bleeder current drawn by fixed resistors in parallel with the tube system. This last factor must be determined by examination of the circuit; but bleeder losses will usually run from ten to twenty milliamperes.

Having found the "B" current consumption of the set, it must be remembered that there is a loss of about 40% in power through the rectifier and filter system. Take, therefore, the figure indicated by "60% efficiency" in Table III; that is, if the voltage-divider system is to furnish 30 watts output, the high-voltage secondary winding must be capable of providing 50 watts input for the rectifier.

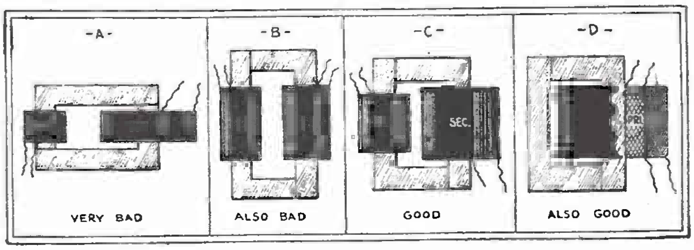

Fig. 5
Efficiency in a transformer is highest when the flux created by the primary is applied most intensely to the secondary, as in the examples at the right.

The high-voltage secondary, feeding into the rectifier tube, must furnish an A.C. voltage nominally equal to the D.C. output at about 63 milliamperes, in the case of an '80 tube feeding a standard rectifier; that is, 300 volts A.C., on each half of the secondary, to give 300 volts rectified D.C. output. At 20 milliamperes draw, the output voltage will rise to about 365; at 100 milliamperes draw, the voltage will go down to about 275. (See Fig. 2.)

It is well, in computing any winding, to leave a liberal margin above the minimum of material which will serve. Larger wire larger cores, etc., give cooler and more satisfactory operation; and temporary overloads will be less injurious to the transformer.

Calculation of the Primary

We have determined the voltages, amperages and wattages demanded for the secondary windings. The primary wattage must equal that of all the secondaries combined, plus an allowance for loss in transformation—that is to say, of current converted into heat.

The primary current depends on the efficiency of the transformer. For power ratings of 500 to 1500 watts, an efficiency of 95% can be expected. For 100 to 500 watts this drops to about 90%; while smaller transformers will probably be in the neighborhood of 85%.

To find the primary current, therefore, first divide the power output by the expected efficiency, which gives the required input power; Table IV may be consulted for the purpose.

Knowing the wattage of the primary, and the input voltage, which is determined, of course, by the power supply, we have only to divide the former by the latter to obtain the current which the primary windings must carry. A very quick approximation may be had by consulting Table III.

For instance, if the line-voltage is 115, and we are figuring on a 50-watt transformer, we find that the nearest value is

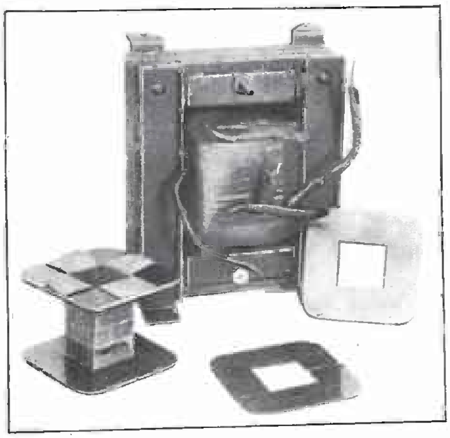

Fig. B
Tape and paper insulation has been used in the transformer above; the spools used in winding the coils are also shown.

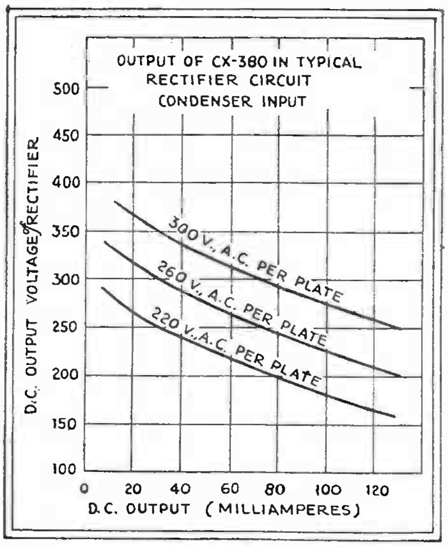

Fig. 2

Relation between input (A. C.) voltage and output (D. C.) voltage and current in an '80 rectifier (E. T. Cunningham Co.).

51.75 watts, which is opposite 45 milliamperes. This is near enough for our calculations of the primary.

The fundamental formula for a transformer's design is

$$Tp = \frac{Ep \times 100{,}000{,}000}{4.44 \times A \times B \times N}$$

Where Tp is the number of turns on the primary, A the cross-section of the core in square inches; B the flux density, per square inch of the cross section; Ep is the input voltage and N is the frequency.

To avoid the solution of this formula, two accompanying charts (Figs. 3 and 4) have been made. Fig. 3 gives the best number of turns for the primary, compared with the line-supply voltage and the rating in watts. A straightedge (the edge of a sheet of paper will do) is laid across the proper figures on the scale of volts at the left and the scale of watts at the right; it will cross the scale of "Number of Turns" at the proper value.

The corresponding size of core is found from Fig. 4 in a similar manner: take the number of primary turns, found from Fig. 3, and draw a line through the point on the scale indicating the voltage supply; the point on the scale at the right shows the area in square inches of the core, and one side of a square cross-section, in inches.

The value of the flux density—which is the determining factor of the core—as shown in the above formula, is estimated at 60,000 lines of force per square inch for the best grade of silicon steel. If the core is smaller, or of less permeable alloy, it is necessary to increase the number of turns of the wire.

TABLE I

FILAMENT WATTAGES:

Volts	Amps.	Tube Types	Wattage (each)
1.50	1.05	'26	1.575
1.50	0.15	10-ohm resistor	0.225
2.50	1.50	'45, '47, PZ	3.750
2.50	1.75	'27, '24, '35, '51	4.325
2.50	0.125	20-ohm resistor	0.313
3.30	0.06	'99	0.200
3.30	0.13	'20, '22	0.400
5.00	0.25	'12A, '71A	1.250
5.00	2.00	'80	10.000
5.00	0.167	30-ohm resistor	0.833
6.30	0.300	'36, '37, '38	1.890
7.50	1.250	'10, '50, '81	9.375
7.50	0.250	30-ohm resistor	1.875

Secondary Windings

We now proceed to divide the number of primary turns, which we found from Fig. 3, by the primary voltage. This gives us the "turns per volt"; and we may multiply the voltage desired from each secondary, by the "turns per volt," to determine the number of turns which that winding must have.

For instance, our primary voltage is 115, and there are 575 turns on the primary; this is 5 turns per volt. A 2½-volt secondary, therefore, should have 12½ turns; a 5-volt secondary, 25; and a 300-300-volt center-tapped secondary, 1500 turns on each side of the tap. In the design of filament windings, modern practice is to make the output voltage a trifle less than the rating of the tube, and thereby prolong the life of the latter. To the secondary winding, we add 5% to the number of turns for "regulation" (loss in transformation.)

We have now to determine the size of wire to be used, and design our core to carry the necessary number of turns, and the current which may be safely carried, by each gauge of wire. (Table V.)

The last column is based on the premise that 1,500 "circular mils" (the equivalent in cross-section of 1,500 wires, each .001-inch in diameter) should be allowed for each ampere of current flowing in the windings. (For a transformer to be used only intermittently, an allowance of 1,000 circular mils per ampere is sufficient; take wire two gauges smaller than that specified in the table). Determine the wire gauge required to carry the current of the primary, and of each secondary.

Example of Calculation

For instance, we are designing a transformer to supply all voltages for a receiver containing three '24 screen-grid tubes, two '27s (one the detector) two '45 power tubes, and an '80 rectifier.

A 2½-volt winding for the first five tubes must supply 8¾ amperes; it rates 22 watts.

A 2½-volt winding for the two power tubes must supply 3¼ amperes including ¼-amp. for the center-tapped resistor; this is 8⅛ watts.

The 5-volt winding for the rectifier supplies 2 amperes; 10 watts.

The combined plate and screen-grid current consumption of the '24s is 16.2 milli-

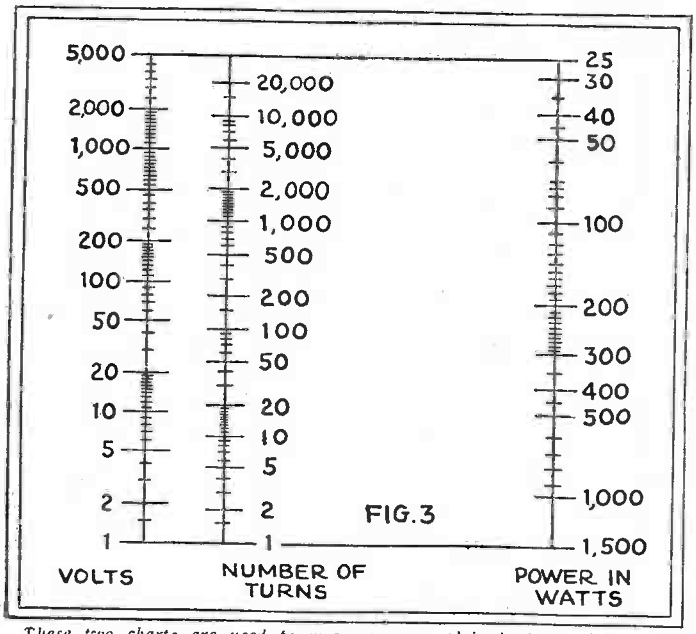

These two charts are used to measure, as explained above: first, the number of primary turns needed; and second, the required size of core.

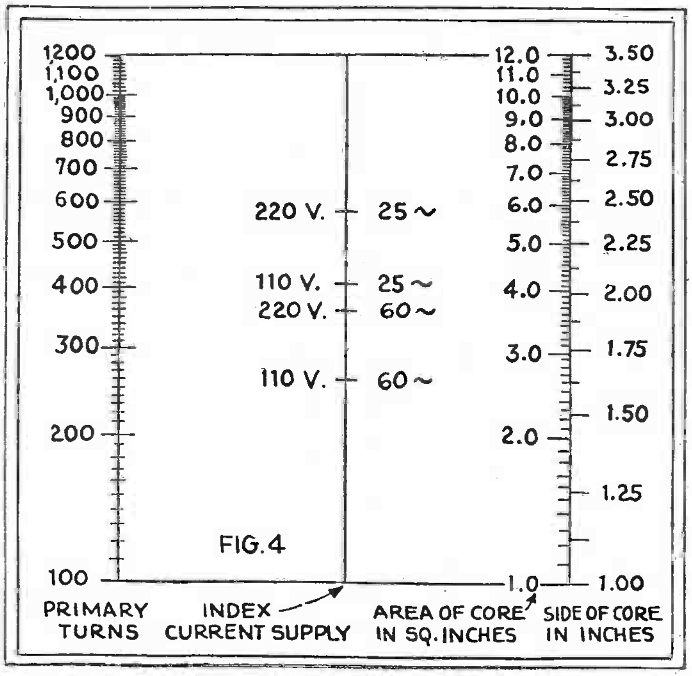

amperes; that of the plates of the '27s, 5 ma. (the detector draws very little); of the '45s, 56 ma. Our voltage divider may draw 15 ma. ("bleed" current); giving a total of 92.2 milliamperes to be furnished by the rectifier, at a D.C. voltage of 330, to allow for the drop in the filter. We have therefore an output wattage from the rectifier of 30.4 and, since our efficiency is around 60%, as stated before, we must figure on a 50-watt A.C. input. This will require a high-voltage secondary giving 360 volts on each side of the center tap, and carrying an alternating current of 139 millamps.

Our primary, therefore, is called upon to supply 90.625 watts and, since it is working at an efficiency of not to exceed 85%, we may rate it for purposes of design at 110 watts.

By reference to Fig. 3, we find 460 turns for our primary, at 115 volts; or four turns per volt. Further calculation gives 10 turns for each 2½-volt secondary, 20 turns for the rectifier filament winding; and 1512 turns on each side of the center tap of our high-voltage secondary (1440 plus 5 per cent for "regulation").

The primary, carrying a current of 788 milliamperes, should not be smaller than No. 19 wire; No. 18 will do. The winding for the five heater-cathode tubes must be No. 9, or 8; that for the power tubes No. 13, or 12; the '80 is supplied through No. 15, or 14: and the high-voltage secondary should be No. 26.

We may, however, for greater flexibility and ease, wind together, in parallel, two No. 12 wires instead of one No. 9. We have now the task of accommodating our windings most compactly, together with their insulation, on a core of 1.58 square inches cross-section or 1.25 inches on a side; which is solved as explained below.

Design of the Core

All that remains is to design a core of required cross-section with an opening, or "window," large enough to hold all the coil layers, *and the insulation between them.*

This can be best accomplished by making a full-size sketch of the contemplated core, on a piece of paper. First draw one leg of the core and assume a certain length for the primary winding. Then ascertain (by reference to Table V) the number of turns that can be wound per layer. As the size of the wire has been determined by the current in the primary, the number of turns per layer is calculated by multiplying the figure for the turns per inch (see the wire table), by the length of the winding, in inches.

After the-turns-per-layer figure is obtained, it is divided into the total number of turns, to get the number of layers. This will give the winding size, which is then sketched over the drawing of the core leg. The estimate of the winding should include about ⅛-inch for insulation over the core laminations. Space is also needed for a thin piece of paper between each layer of wire.

If the secondary winding is to be placed over the primary (D, Fig. 5) a space of ⅛-inch is necessary, for insulating tape between the two coils. The size of the secondary is figured like that of the primary, and the size of the winding is drawn in the sketch. As additional windings are used, allow similar space for insulation between each.

Certain shapes of transformers will result in best "regulation." (By "regulation" is meant the drop of output voltage when the transformer is under load.) Fig. 5 shows some of the recommended shapes; as well as some less desirable.

If your winding becomes too long for the depth, or *vice versa*, try a different length for the winding, and re-calculate the size. A little time spent at this point will be well repaid later.

Construction of the Transformer

After the coil and core dimensions are decided upon, the only remaining calculation is to figure the number of core laminations required.

Divide the thickness of the laminations into the size of one side of the core. For 60-cycle transformers, core material .014-inch thick is usually considered best. For 25-cycle transformers, a somewhat thicker core material may be used; but, with home-constructed cores, it is probably best to use the same size as for 60 cycles.

The remainder of the design consists of laying out the core and windings as explained above. After the design is complete, the construction of the windings follows. Many suggestions have been published regarding methods of using hand drills, sewing machines and other devices to make the tedious job of winding more easy; this will be left to the constructor to decide.

There are several points in the construction of the coils which must be watched carefully. If enamelled wire is used, it is essential that a layer of insulating paper be placed over each layer of wire, for the primary and the high-voltage secondary. If cotton-covered wire is employed, this is not necessary for the primary; but, for the high-voltage winding, care should be taken to place a thin piece of paper over each layer, and carefully insulate the coil from the other windings and from the core.

The form for winding the coils should be made from stiff cardboard or, preferably, from thin fiber, in the form of a

TABLE II

Voltages:		Current	Tube Types	Watts
Plate	Grid	Ma.		(each)
135	11.5	6.2	'12A	0.908
135	9.0	6.3	'26	0.908
135	9.0	4.5	'27	0.648
135	29.5	17.5	'71A	2.880
180	15.0	7.6	'12A	1.482
180	13.5	7.4	'26	1.432
180	13.5	5.0	'27	0.968
180	43.0	20.0	'71A	4.460
180	34.5	25.0	'45	5.390
250	50.0	34.0	'45	10.200
250	22.0	10.0	'10	2.720
250	45.0	28.0	'50	8.260
350	31.0	16.0	'10	6.100
350	63.0	45.0	'50	18.585
425	39.0	18.0	'10	8.350
450	84.0	65.0	'50	29.370

Voltages			Current #	Tube	Watts
Pl.	C.-G.	S.-G.	Ma.	Type	(each)
135	1.5	...	3.5	'36	0.478
135	9.0	...	4.5	'37	0.648
135	13.5	*135	10.5	'38	1.560
180	3.0	90	5.4	'24	0.988
180	1.5	75	7.0	'35	1.295
180	3.0	90	7.5	'51	1.375
250	3.0	90	9.0	'35	2.270
250	16.5	*250	40	'47,PZ	10.660

#Including Screen-Grid Current. * Pentode

Table III gives input wattages for a given current and voltage; Table IV the output (first column) for any input.

TABLE III

Current Draw (Milliamps.)	VOLTAGES								
	85	100	105	110	115	120	210	220	230
20	17	20	21	22	23	24	42	44	46
25	21¼	25	26¼	27½	28¾	30	52½	55	57½
30	25½	30	31½	33	34½	36	63	66	69
35	29¾	35	36¾	38½	40¼	42	73½	77	80½
40	34	40	42	44	46	48	84	88	92
45	38¼	45	47¼	49½	51¾	54	94½	99	103½
50	42½	50	52½	55	57½	60	105	110	115
55	46¾	55	57¾	60½	63¼	66	115½	121	126½
60	51	60	63	66	69	72	126	132	138
70	59½	70	73½	77	80.5	84	147	154	161
80	68	80	84	88	92	96	168	176	184
90	76½	90	94½	99	103½	108	189	198	207
100	85	100	105	110	115	120	210	220	230
120	102	120	126	132	138	144	...	...	...
140	119	140	147	154	161	168	...	...	...
160	136	160	168	176	184	192	...	...	...
180	153	180	189	198	207	216	...	...	...
200	170	200	210	220	230	240	...	...	...

TABLE IV

INPUT WATTAGE ALLOWANCES

Required Wattage	Percentages of Efficiency			
	60%	75%	80%	85%
25	41.67	33.33	31.25	29.41
35	58.33	46.67	43.75	41.18
50	83.33	66.67	62.50	58.83
60	100.00	80.00	75.00	70.59
70	116.67	93.33	87.50	82.35
80	133.33	106.67	100.00	94.12
90	150.00	120.00	112.50	105.88
200	166.67	133.33	125.00	117.65
120	200.00	160.00	150.00	141.18
150	250.00	200.00	187.50	176.47
200	333.33	266.67	250.00	235.30

spool with an opening slightly larger than the cross-sectional area of the core.

In some transformers, an electrostatic shield is placed between the primary and the secondary windings. It consists of a thin strip of copper or brass as wide as the length of the winding. It is wrapped over the primary coil before the secondary is wound and it is insulated very carefully from both. (Caution: Its edges must not be allowed to touch, for this "shorted turn" would greatly overload the primary.) Its purpose is to overcome line noises and static pick-up in the receiver through the power supply. It is usually connected to the over-all shield can around the transformer, and is grounded in this way.

TABLE V

TABLE OF MAGNET WIRES

Gauge B&S	Turns per Inch D.C.C.	Turns per Inch Enam.	Feet per Pound D. C. C.	Feet per Pound Enamelled	Current Amperes
6	5.4	5.7	12.3	12.6	17.5
7	6.1	6.5	15.5	15.9	13.8
8	6.8	7.3	19.6	20.0	11.0
9	7.6	8	24.6	25.2	8.7
10	8.5	9	30.9	31.8	6.9
11	9.6	10	38.8	40.1	5.5
12	10.6	11	48.9	50.6	4.4
13	11.9	12	61.5	63.8	3.5
14	13.1	14	77.3	80.4	2.7
15	14.7	16	97.3	101.4	2.2
16	16.4	18	119	128	1.7
17	18.1	21	150	161	1.3
18	20.0	23	188	203	1.1
19	21.8	27	237	257	0.86
20	23.9	29	298	323	0.68
21	26.2	32	370	408	0.54
22	28.6	36	461	515	0.43
23	31.1	40	584	648	0.34
24	33.6	45	745	817	0.27
25	36.2	50	903	1,031	0.21
26	39.9	57	1,118	1,300	0.17
27	42.6	64	1,422	1,639	0.13
28	45.5	71	1,759	2,067	0.11
29	48.0	81	2,207	2,607	.084
30	51	88	2,534	3,287	.067
31	57	104	2,768	4,145	.053
32	60	120	3,137	5,257	.042
33	64	130	4,698	6,591	.033
34	69	140	6,168	8,310	.026
36	79	190	7,877	13,210	.017
38	89	206	10,666	21,010	.010
40	102	230	14,222	33,410	.006

There are a number of sources for transformer laminations; some companies make a specialty of supplying a large number of sizes at reasonable prices. If a suitable size cannot be obtained, the sheet steel can be cut, by a tinsmith, to the required dimensions.

Some experimenters may have on hand old transformers with suitably-sized cores which may be adapted to the job, with some juggling of the coil sizes. It is best not to crowd the coil into too small a space; better results can be obtained by using more insulation in order to fill the "window" space.

One safe rule to follow is to figure high rather than low when in doubt about the dimensions of the core, wire, etc.

Filament Resistors

THE question, "What resistance is needed, in series with a tube's filament, to reduce to the proper operating value the voltage supplied by a battery or transformer?" is very frequently asked; notwithstanding that every radio worker is supposed to know Ohm's Law in the form $R = E/I$ —that is, the resistance in ohms equals the voltage divided by the current in amperes. That question is now being asked in connection with the problem of using the new two-volt tubes in an ordinary receiver.

The table given below may make it a bit easier to visualize the needs of the different tubes; the voltage drop required need be multiplied only by the figure in the last column, for any given type of tube.

For instance, if a '30-type, 2-volt tube is to be operated from a 6-volt battery, four volts must be dropped in the resistor. Since 4x16.67 is 66.68, the answer is 66 2/3 ohms; and this may be checked by the fact that this figure is just twice the resistance of the tube's filament, in which 2 volts are dropped.

In connection with this, it may be said that the makers of the new tubes recommend that the operating voltage be held as closely as possible to the exact rating of 2 volts; preferably by the use of a meter. It will be remembered that the voltage of a battery varies with the condition of charge; and therefore a fixed ballast resistor is not desirable in the filament circuit, except in series with a hand- or automatically-adjusted (Amperite) rheostat. The maximum value of the resistance thus available should be slightly above the theoretical figure worked out from the table; that of the Amperite, which varies with the current, should be taken at the normal rating for tube current and voltage drop.

Filament Characteristics

Type of Tube	Volts	Amps.	Ohms	Ohms per Volt
'80	5.0	2.000	2.50	0.50
'27, '24	2.5	1.750	1.43	0.57
'45	2.5	1.500	1.67	0.67
'10, '50, '81..	7.5	1.250	6.00	0.80
'26	1.5	1.050	1.43	0.95
D'11, X'12 ..	1.1	0.250	4.40	4.00
'01A, '71A, '12A, '00A, '40*	5.0	0.250	20.00	4.00
'22, '20	3.3	0.132	25.00	7.58
'31	2.0	0.130	15.38	7.69
'99	3.3	0.063	52.38	15.87
'30, '32	2.0	0.060	33.33	16.67

COMPUTATION OF DECIBELS

The *decibel,* so often used in the work of audio amplification, transmission and reproduction, is simply the ratio between the strengths of any two signals, or the ratio of change in the energy of a signal when it is amplified or attenuated.

Ten decibels "up" on a signal means that the power has been increased tenfold; ten decibels down. that it has been divided by ten. The steps are unequal, but the peculiarities of this method of rating are based on physiological and engineering reasons. The decibel, as a mathematician would instantly see from the table given here, is a *logarithmic* unit (the number of decibels is represented by ten times the "common" logarithm of the ratio of change.)

Since the sound energy of the reproducer should be, approximately, in proportion to the electrical output power; and since electric power is measured by "voltage times current," the power varies as the *square* of the voltage (or current). Therefore, the ratio of energy change corresponding to ten decibels is as much as the ratio of voltage (or current) change, corresponding to twenty decibels.

Any signal strength may be taken as the base (or zero) in computing relative intensities. However, for voice-transmission measurements, six milli-watts (1.73 volts across a 500-ohm line) is a standard used by engineers.

The ratio of change in power, and in voltage (or current) corresponding to any number of decibels, may be quickly found from the following table. Multiply the signal strength, or voltage, which is taken as the base, by the factor given in the proper column, opposite the appropriate number of decibels.

"UP"		DECIBELS	"DOWN"	
Energy	Voltage	Number	Energy	Voltage
1.26	1.12	1	0.794	0.891
1.59	1.26	2	.631	.794
2.00	1.41	3	.501	.708
2.51	1.59	4	.398	.631
3.16	1.79	5	.316	.562
3.98	2.00	6	0.251	0.501
5.01	2.24	7	.199	.447
6.31	2.51	8	.158	.398
7.94	2.82	9	.126	.355
10.00	3.16	10	.100	.316
12.59	3.55	11	.079	0.282
15.85	3.98	12	.063	.251
19.96	4.47	13	.050	.224
25.12	5.01	14	.040	.200
31.62	5.62	15	.032	.178
39.81	6.31	16	.025	0.158
50.12	7.08	17	.020	.141
63.10	7.94	18	.016	.126
79.43	8.91	19	.013	.112
100.00	10.00	20	.010	.100
125.9	11.22	22	.0079	.089
158.5	12.59	22	.0063	.079
199.6	14.13	23	.0050	.071
251.2	15.85	24	.0040	.063
316.2	17.78	25	.0032	.056
398.1	19.96	26	.0025	.050
501.2	22.39	27	.0020	.047
631.0	25.12	28	.0016	.040
794.3	28.18	29	.0013	.035
1,000.0	31.62	30	.0010	.032
1,259	35.48	31	.0008	.028
1,585	39.81	32	.0006	.025
1,998	44.67	33	.0005	.022
2,512	50.12	34	.0004	.020
3,162	56.23	35	.00032	.018
3,981	63.10	36	.00025	.016
5,012	70.80	37	.00020	.014
6,310	79.43	38	.00016	.013
7,943	89.13	39	.00013	.011
10,000	100.00	40	.00010	.010
12,590	112.2	41	.00008	.0089
15,850	125.9	42	.00006	.0079
19,960	141.3	43	.00005	.0071
25,120	158.5	44	.00004	.0063
31,620	177.8	45	.000032	.0056
39,810	199.6	46	.000025	.0050
50,120	223.9	47	.000020	.0045
63,100	251.2	48	.000016	.0040
79,430	282.0	49	.000013	.0036
100,000	316.0	50	.000010	.0032
1,000,000	1,000	60	.000001	.001
10,000,000	3,162	70	.0000001	.0003
100,000,000	10,000	80	.00000001	.0001
1,000,000,000	31,620	90	.000000001	.00003
10,000,000,000	100,000	100	.0000000001	.00001

Base and Socket Connections

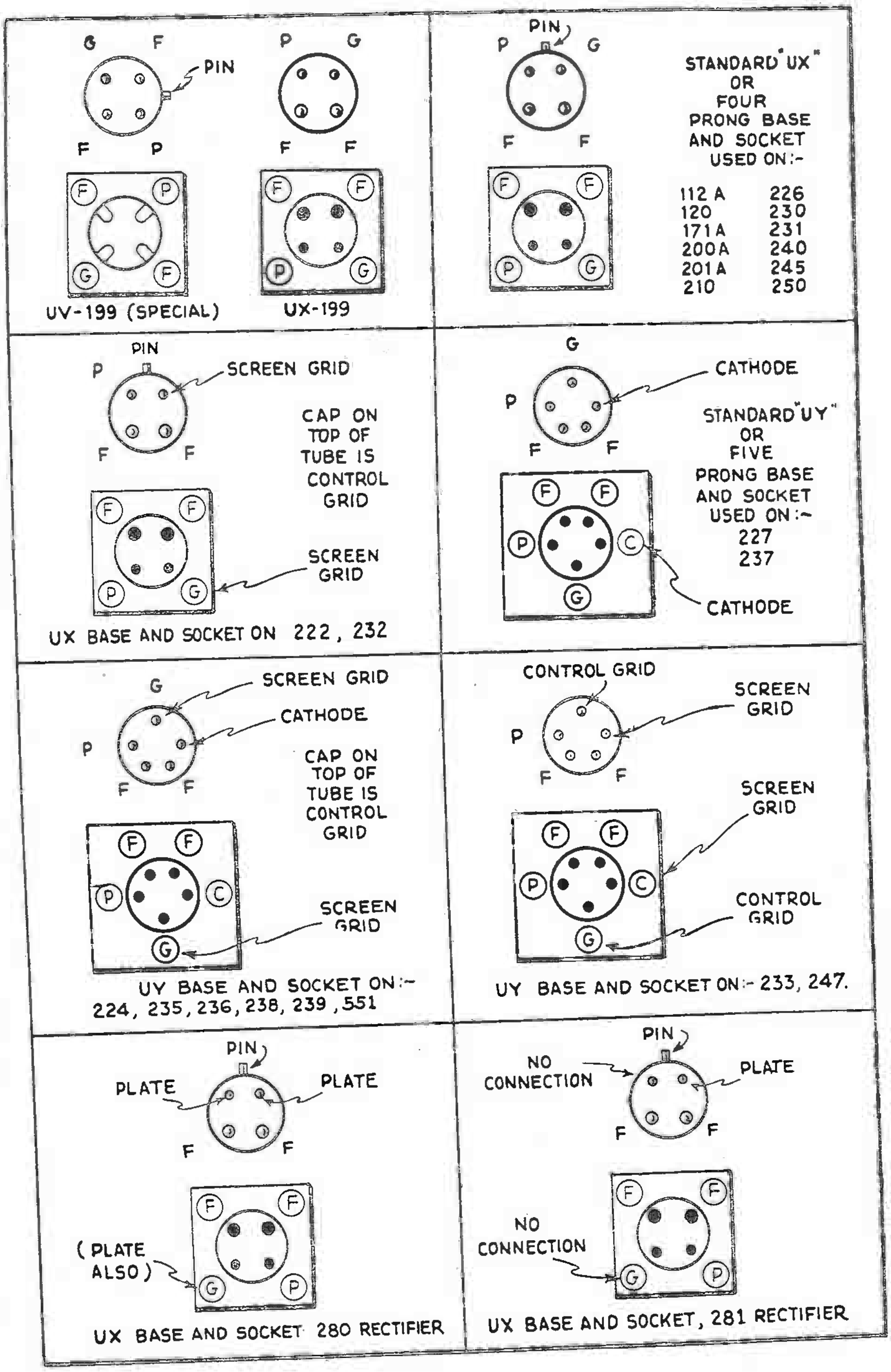

Tube Characteristic Curves

THE characteristic curves that appear on the following pages are of great value to every student of vacuum-tube theory and operation. They should be studied very carefully, as they reveal many interesting features not evident otherwise in mere charts.

For the sake of simplicity, symbolic abbreviations are used to indicate various filament, grid, screen and plate voltages and currents. The following explanation will help make these abbreviations clear.

The letter E in all cases refers to electromotive force, or voltage.

The letter I stands for current in amperes, milliamperes or microamperes.

The letter R stands for resistance, measured in ohms.

The small letters e, i and r are also used sometimes.

Mu is amplification factor, expressed by a simple numeral.

Gm is mutual conductance or transconductance, expressed in micromhos.

R.M.S. is a standard electrical abbreviation for root mean square, as applied to the value of alternating voltages.

M.A. is simply an abbreviation for milliamperes. The word microamperes is usually spelled out to prevent confusion.

The letter "a" or "f" after E or I means "A" or filament voltage or current. Thus, the letter "b" or "p" indicates the "B" or plate circuit; "c" or "g" the "C" or grid circuit. In the case of the tetrode, which has two screens, the control grid is "c" or "cg" and the screen-grid "c2" or "sg".

If we run through several curves and note the abbreviations used, we find the following:

Ef	filament voltage
Ep	plate voltage
Eb	plate voltage
Ec	grid voltage
Ec	control grid voltage
Eg	grid voltage
Is	electron emission
Ec2	screen-grid voltage
Esg	screen-grid voltage
If	filament current
Ia	filament current
Ib	plate current
Ip	plate current
Ic	grid current
Ig	grid current
Ic2	screen-grid current
Isg	screen-grid current
Rp	plate resistance
rp	plate resistance

Explanation of Curves on Following Pages

THE characteristic curves of a vacuum tube tell more about the action of that tube than can be told in two pages of reading matter. Do not let the curves confuse you; if you will study them for a few minutes apiece, you will find them almost self-explanatory.

For instance, suppose you want to know how much plate current a 112A tube will draw when it is operated at its normal plate voltage of 135 volts and grid bias of - 9 volts. Consult the curve entitled "Plate Characteristics" (on the page following) and note that the third curve is the one marked Ec= - 9. Along the bottom, where the divisions are marked off in plate voltage, 135 volts will be three-quarters of the way between 120 and 140. Run a line straight up from this point, and where it hits the third curve, look across to the left, and there you will find the plate current indicated as 6 milliamperes.

TYPE 112A

FIL. CHARACTERISTICS

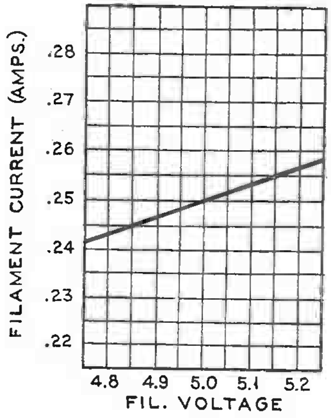

MUT. CHARACTERISTICS

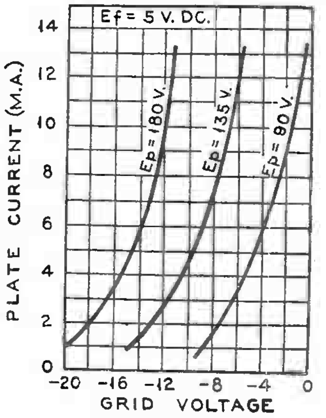

TYPE 112A
DYNAMIC CHARACTERISTICS

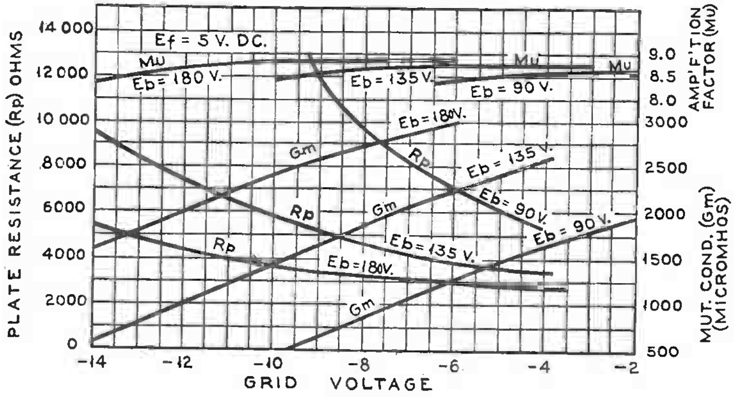

PLATE CHARACTERISTICS

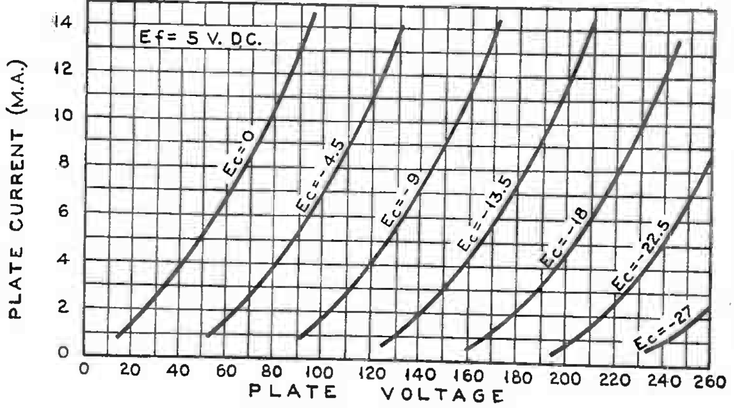

OUTPUT CHARACTERISTIC

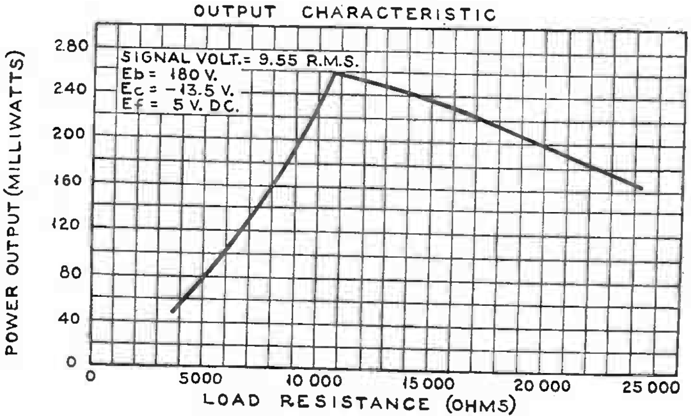

TYPE 120

FIL. AND EMISSION CHARACTERISTICS

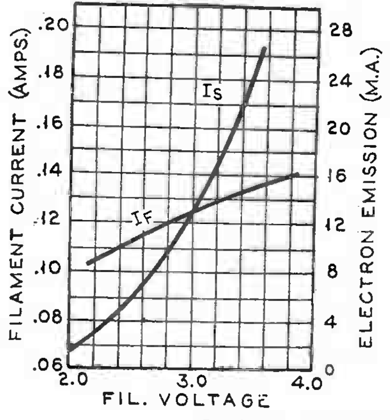

MUTUAL CHARACTERISTICS

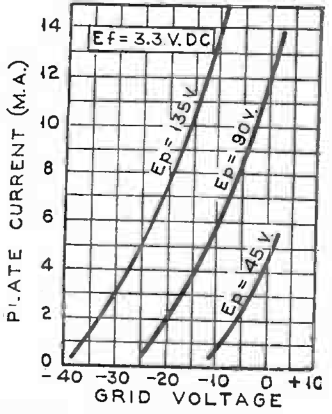

TYPE 120
DYNAMIC CHARACTERISTICS

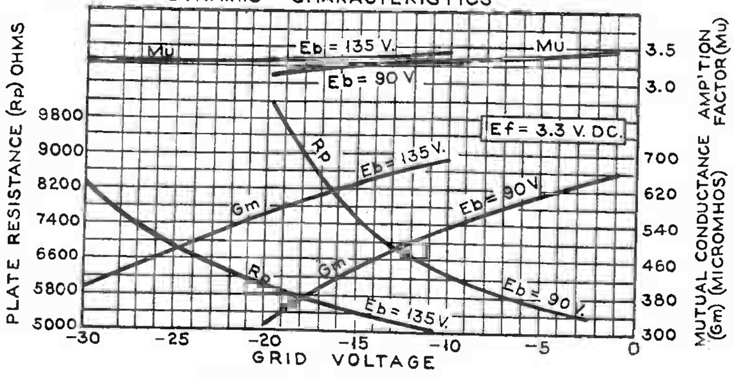

PLATE CHARACTERISTICS

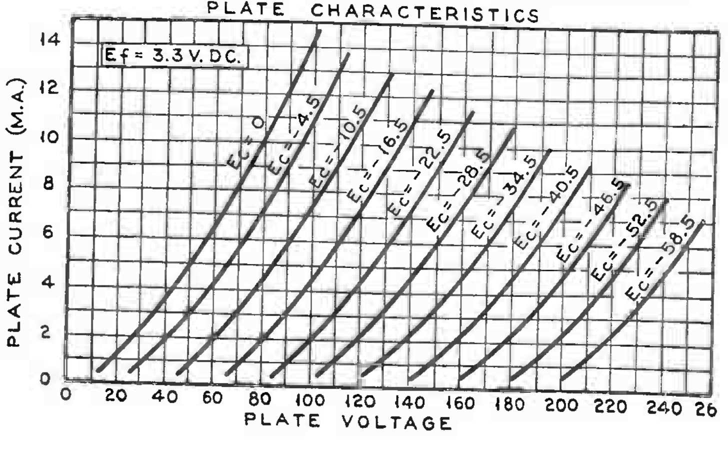

OUTPUT CHARACTERISTIC

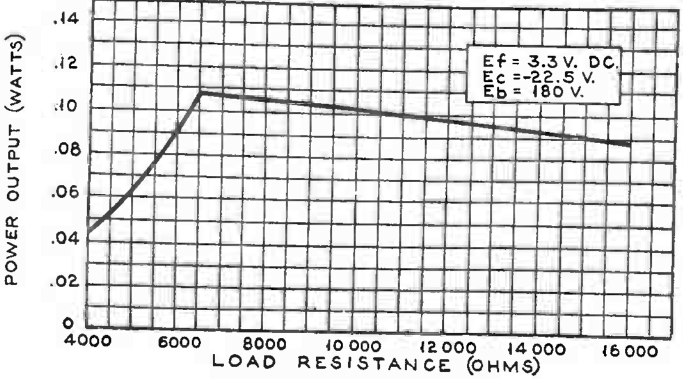

TYPE 171A

FIL. CHARACTERISTIC

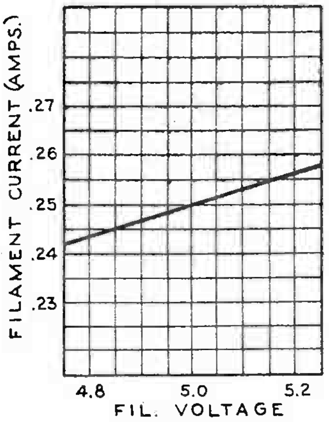

MUT. CHARACT'STICS

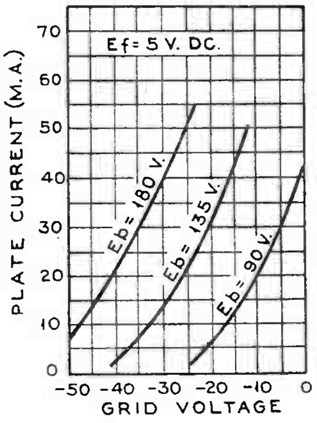

TYPE 171A

DYNAMIC CHARACTERISTICS

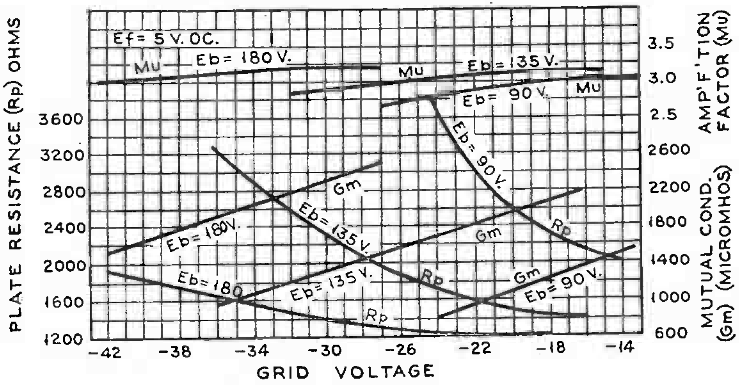

PLATE CHARACTERISTICS

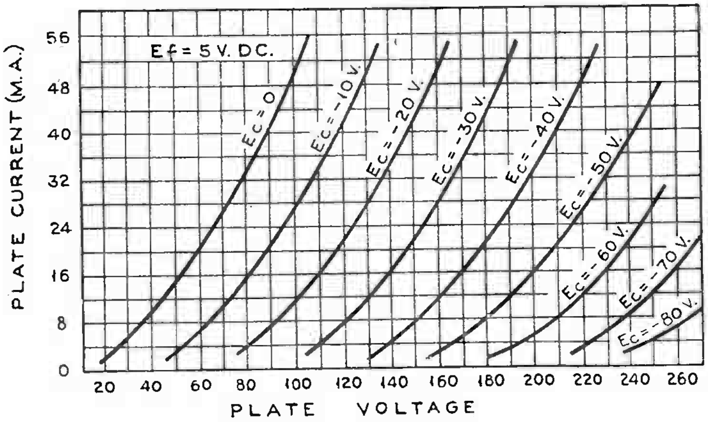

OUTPUT CHARACTERISTIC

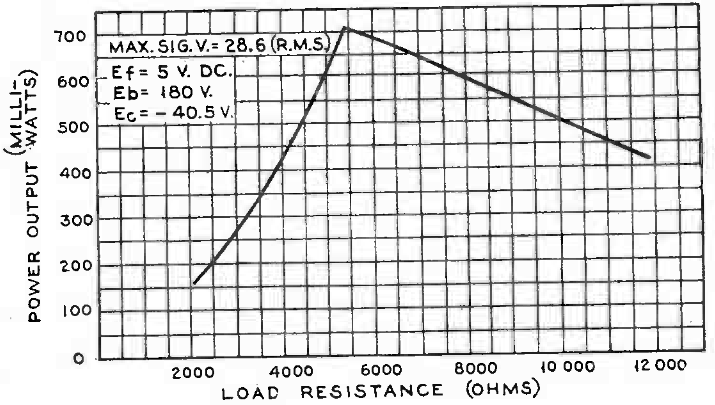

TYPE 199

FIL. AND EMISSION CHARACTERISTICS

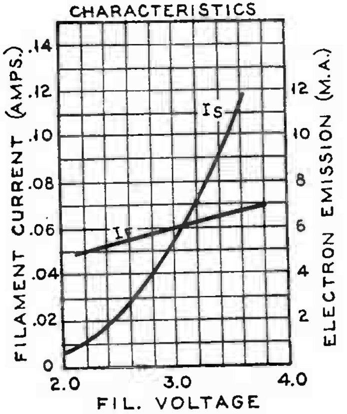

GRID CHARACTERISTICS (SUBJECT TO LARGE VARIATIONS)

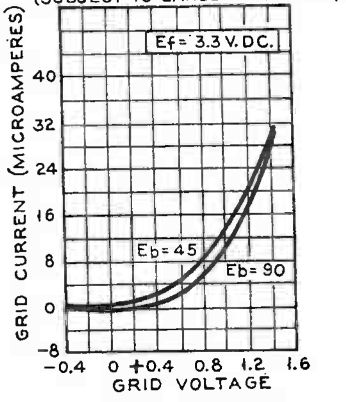

TYPE 199

DYNAMIC CHARACTERISTICS

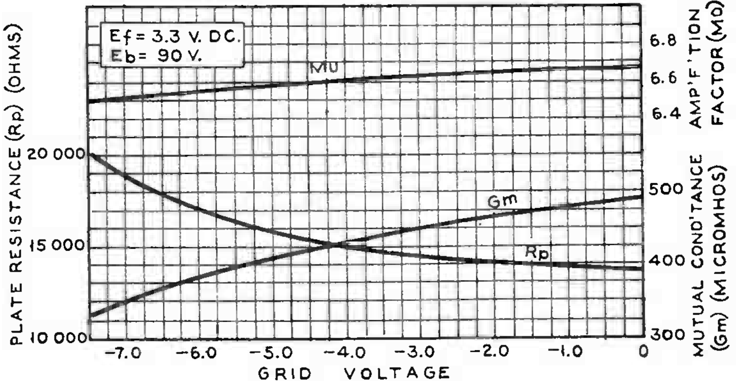

PLATE CHARACTERISTICS

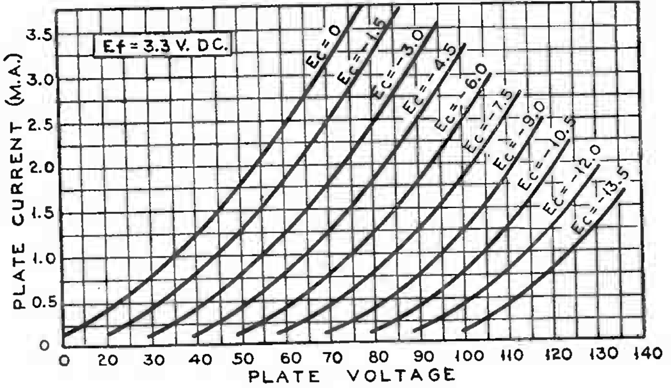

MUTUAL CHARACTERISTICS

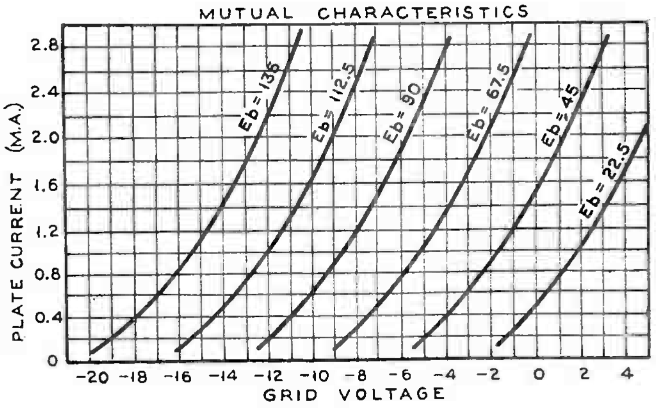

TYPE 201A

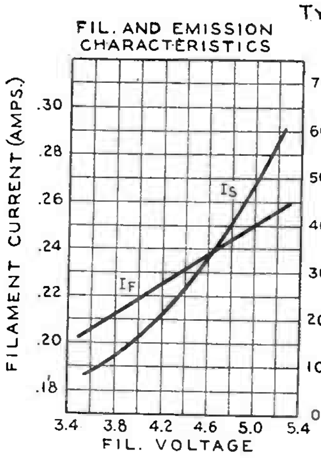
FIL. AND EMISSION CHARACTERISTICS

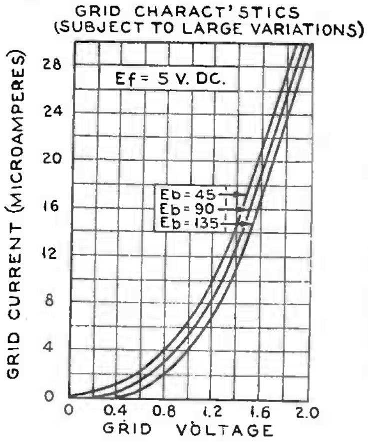
GRID CHARACT'STICS (SUBJECT TO LARGE VARIATIONS)

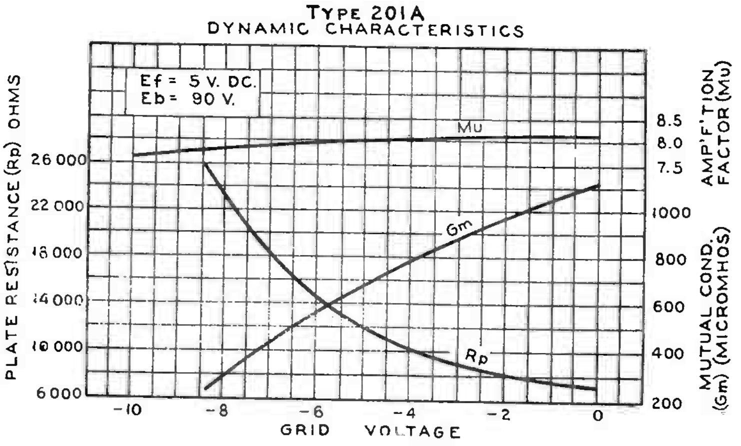
TYPE 201A DYNAMIC CHARACTERISTICS

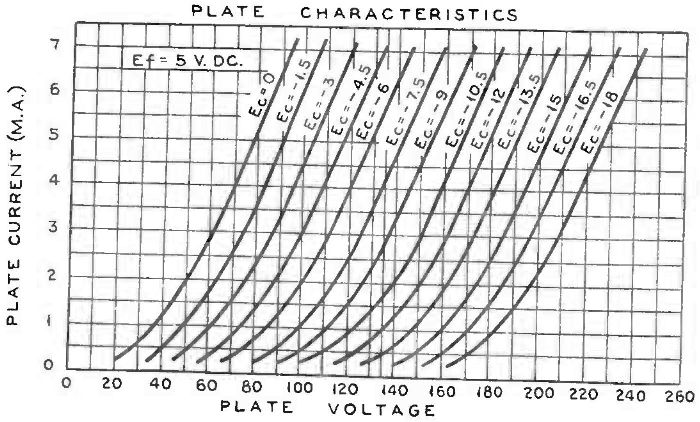
PLATE CHARACTERISTICS

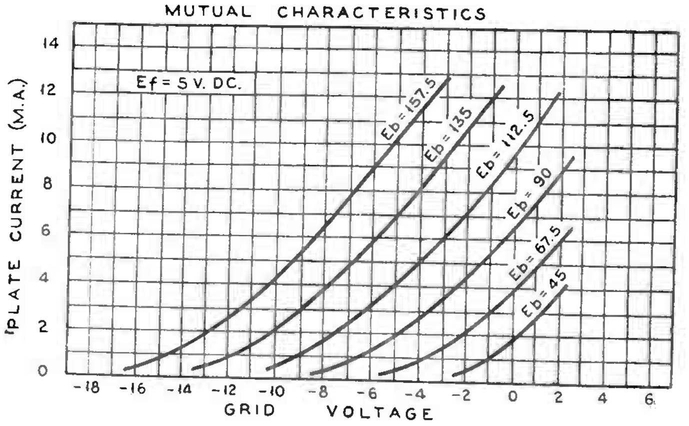
MUTUAL CHARACTERISTICS

TYPE 222

The 222 may be used as a detector providing audio amplification is comparatively low in order to prevent microphonic disturbances. The audio gain permissable depends on the type of cabinet, the speaker design and the power output capabilities of the output tubes. In any circuit a cushion type socket is recommended. In addition to its recommended application as a screen-grid radio-frequency amplifier, this tube may be employed in experimental circuits wherever a double-grid, four-electrode tube is desired.

In circuits designed for the 222, the 232 may be substituted providing the filament and grid voltages are altered to conform to the requirements of the latter.

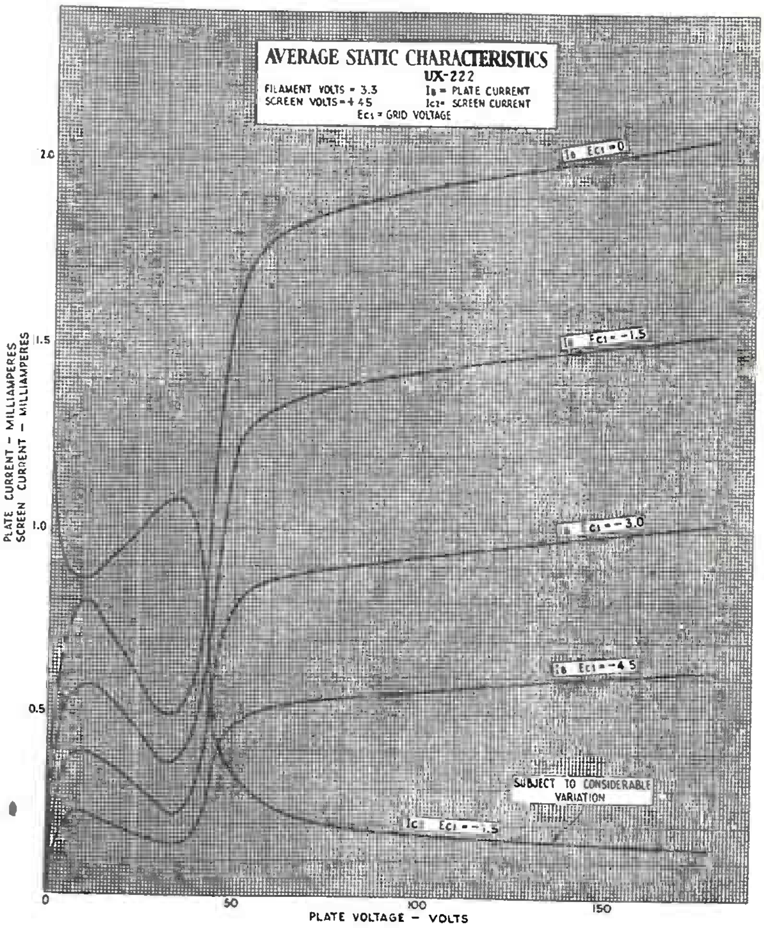

TYPE 224

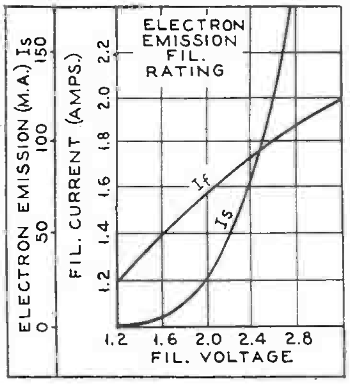

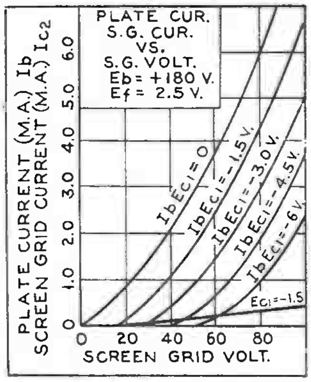

TYPE 224

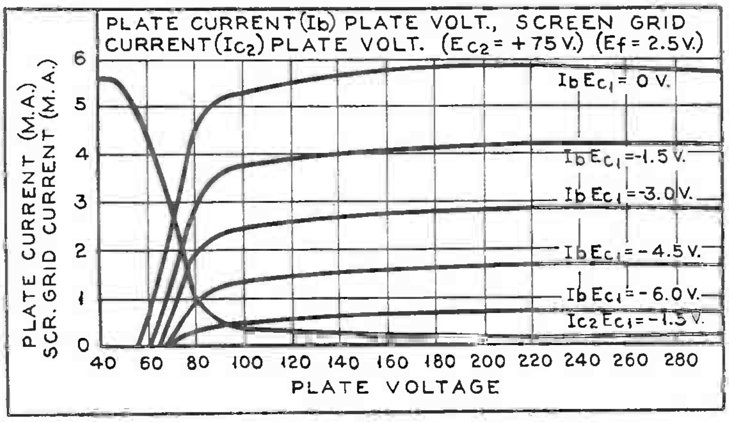

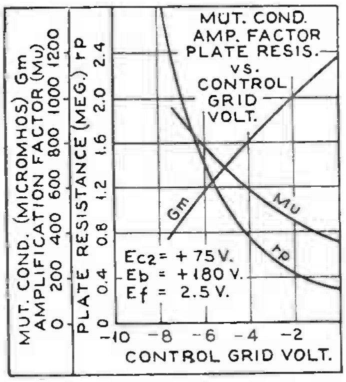

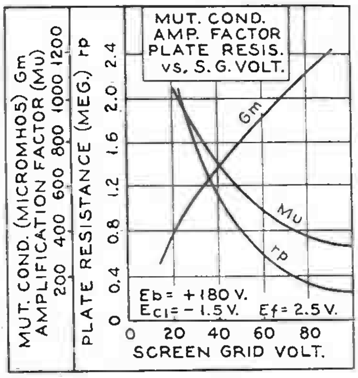

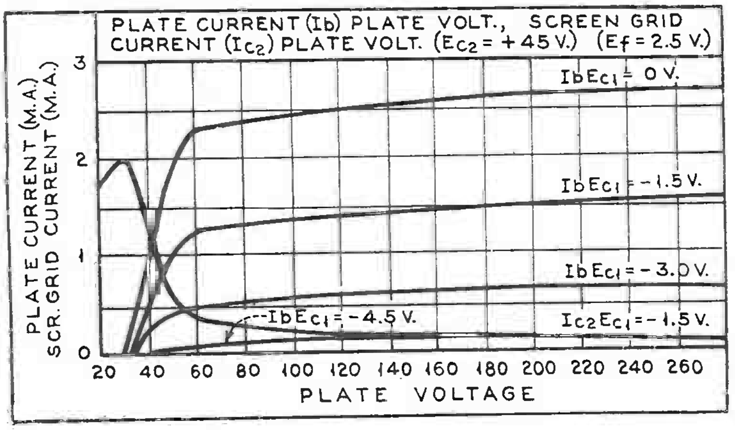

TYPE 224

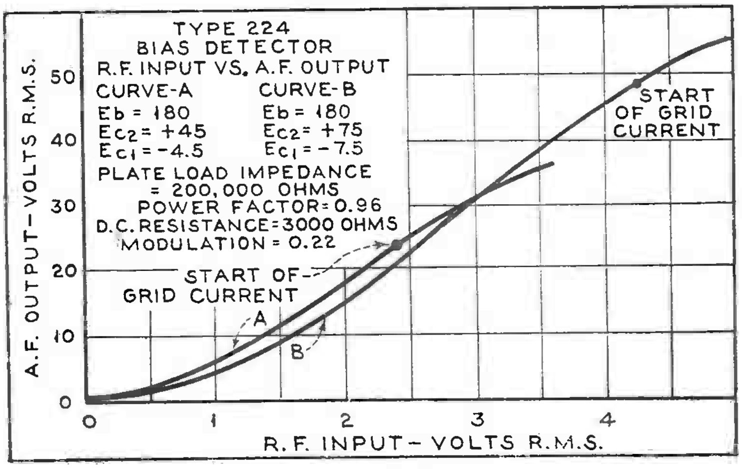

TYPE 226

AVERAGE FILAMENT CUR. CHARACTERISTICS

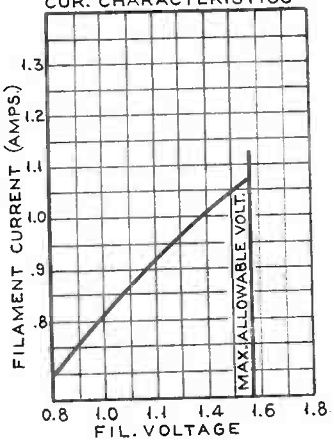

AVERAGE PLATE CHARACTERISTICS Ef = 1.5 V. DC.

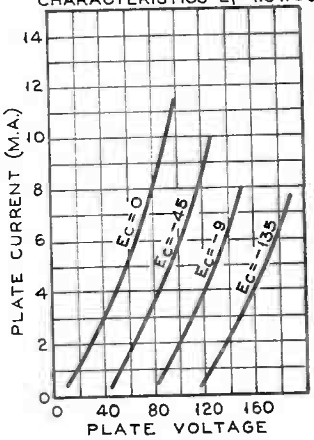

TYPE 226

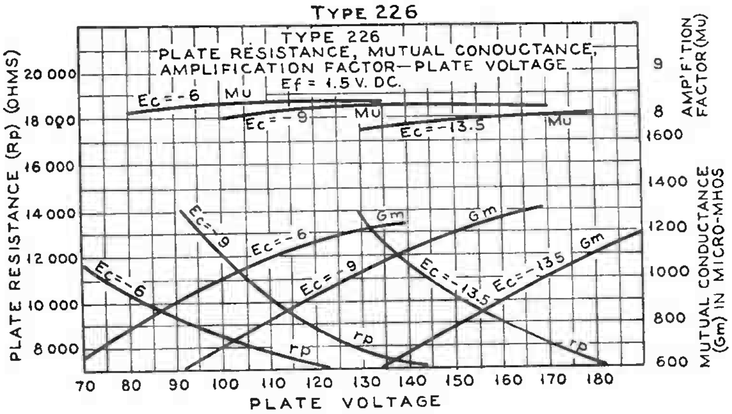

AVERAGE MUTUAL CHARACTERISTICS Ef = 1.5 V. D.C.

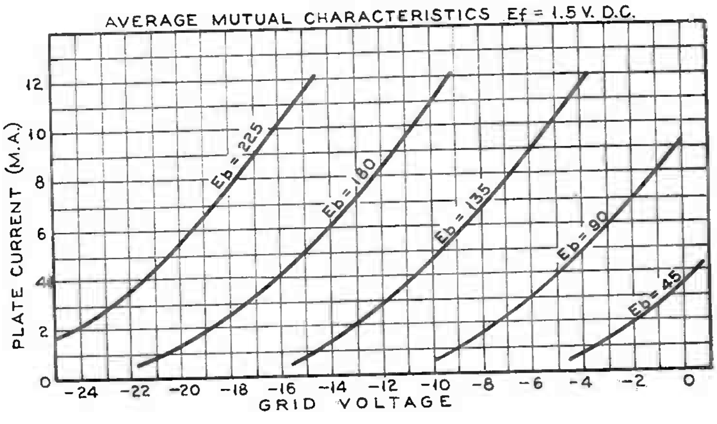

TYPE 227

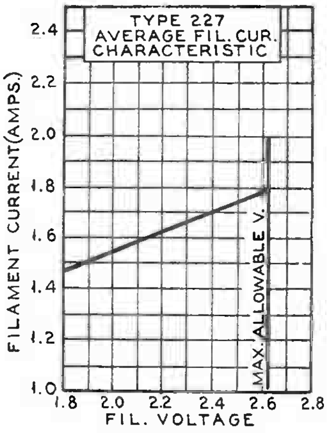

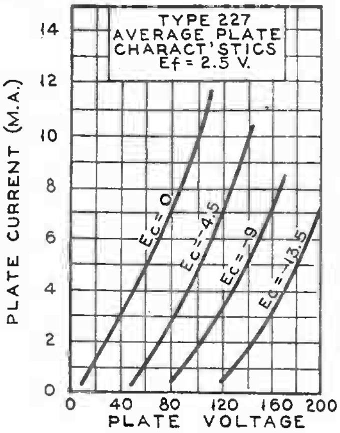

TYPE 227

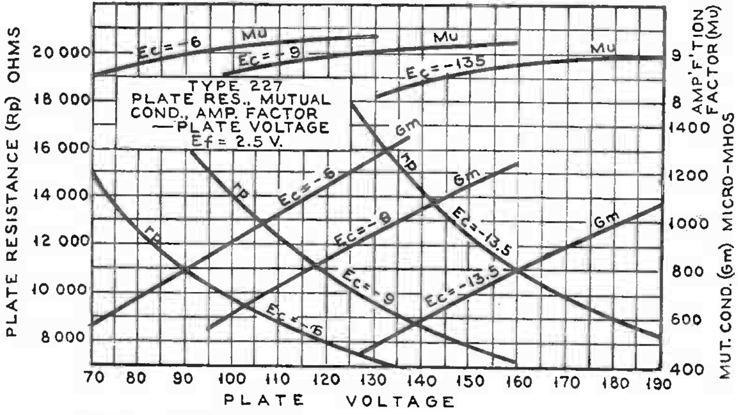

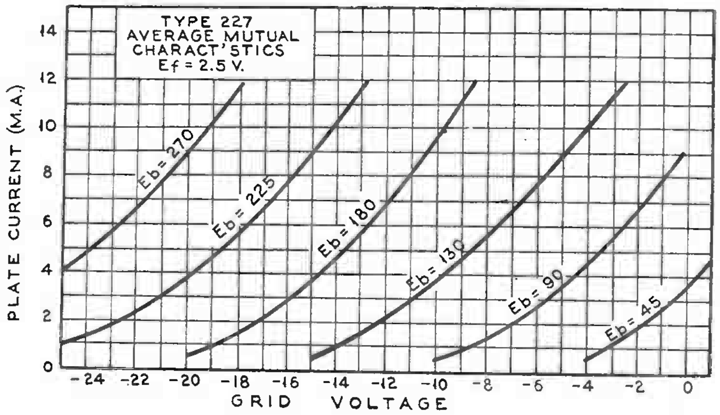

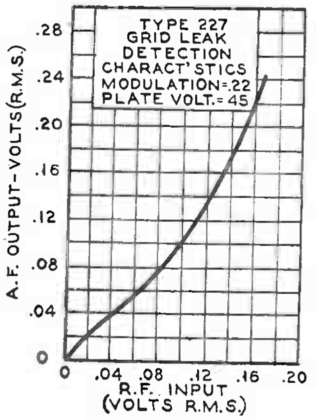

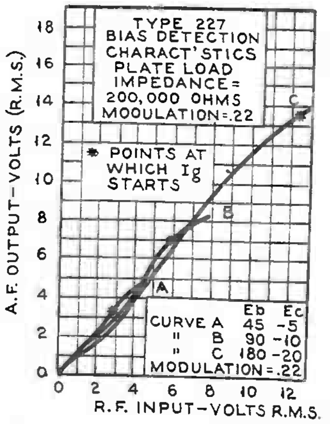

TYPE 230

FILAMENT CHARACTERISTICS

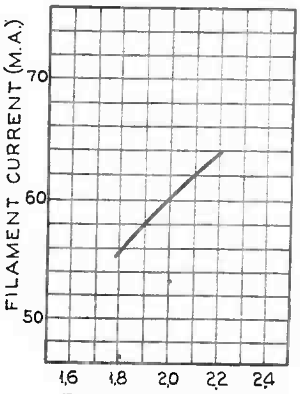

GRID CHARACTERISTICS

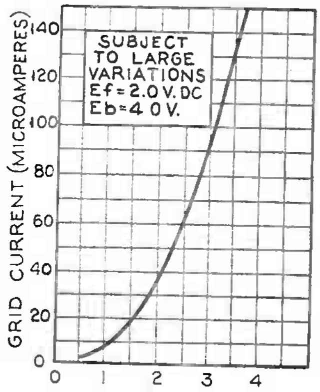

TYPE 230
DYNAMIC CHARACTERISTICS

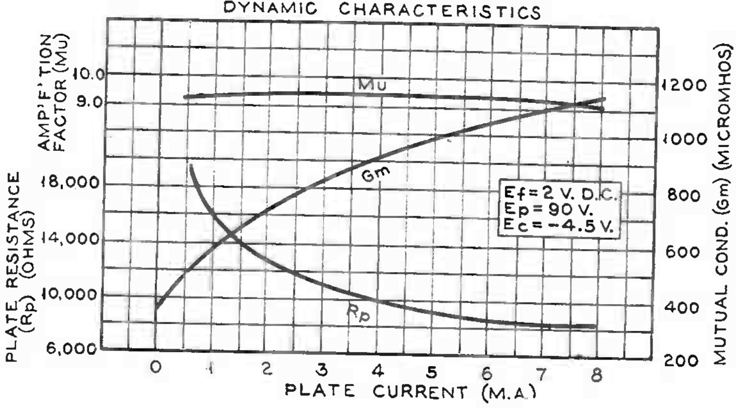

PLATE CHARACTERISTICS

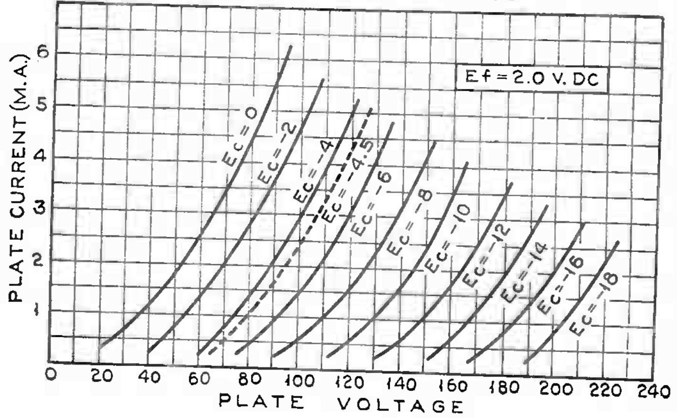

MUT. CHARACTERISTICS

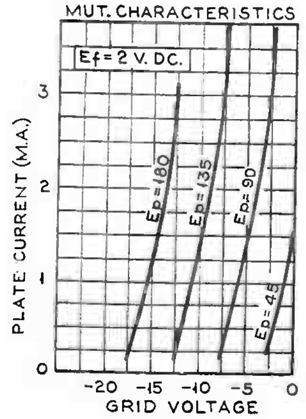

DET. CHARACTERISTICS

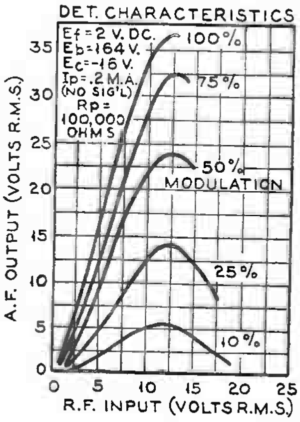

TYPE 231

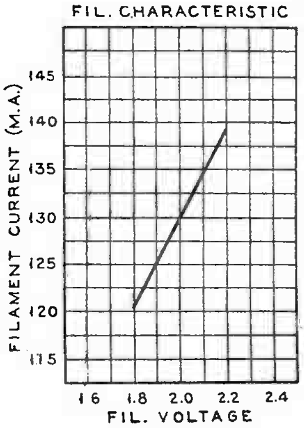

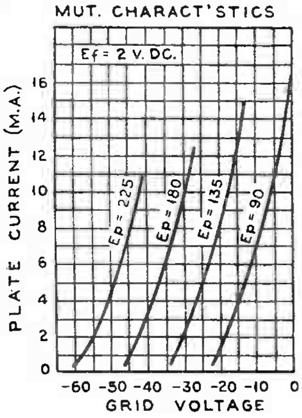

TYPE 231
DYNAMIC CHARACTERISTICS

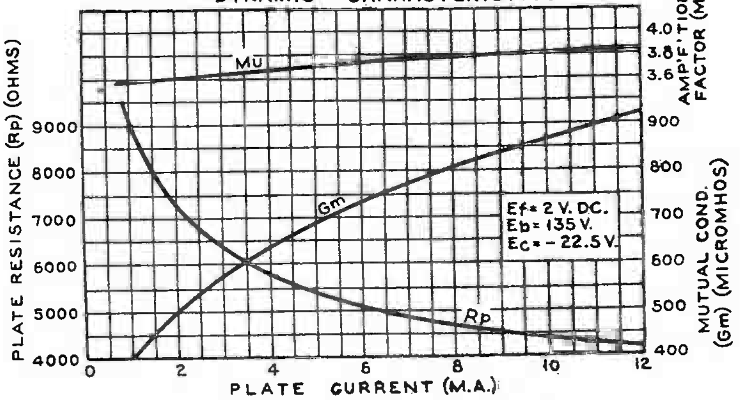

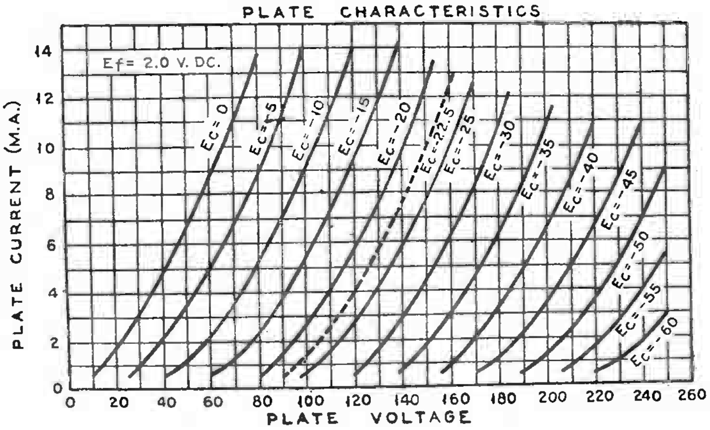

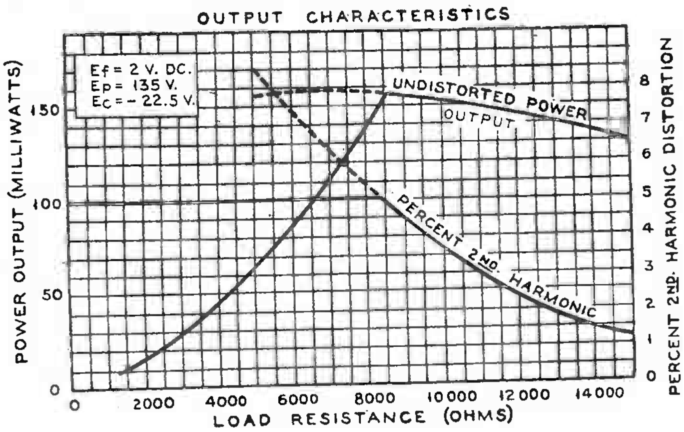

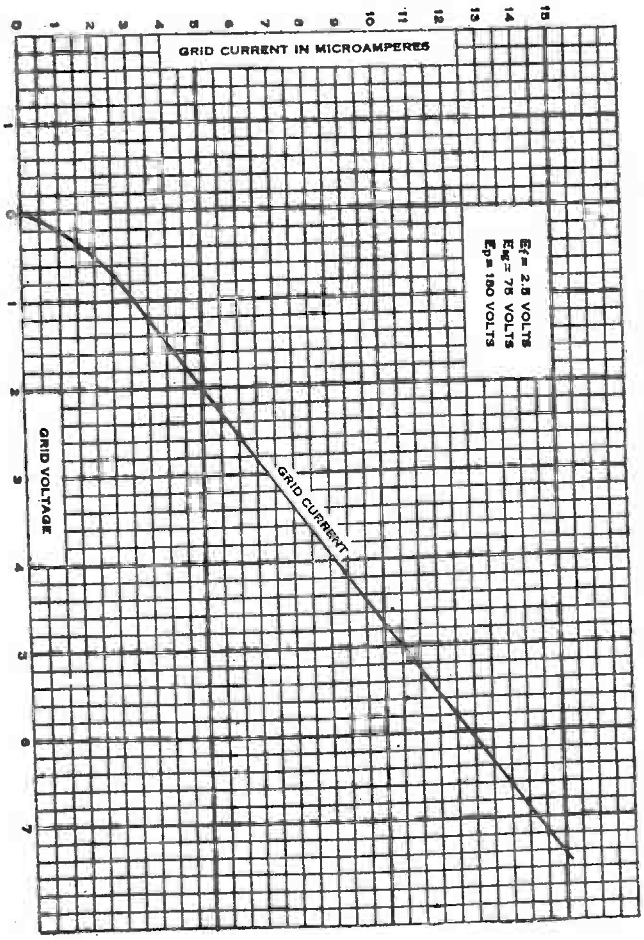

GRID CURRENT VS GRID VOLTAGE

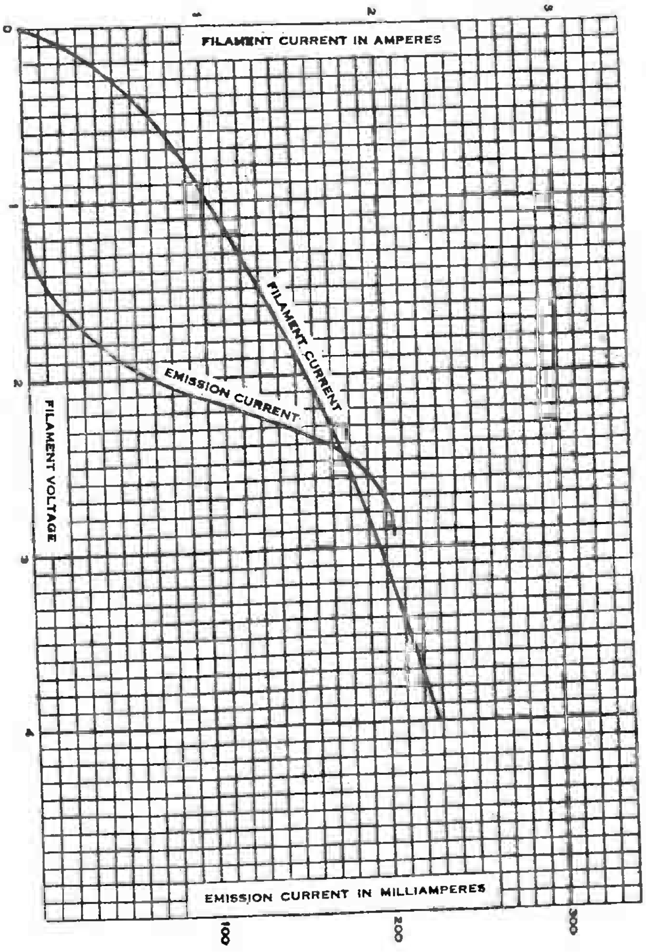

FILAMENT CURRENT VS FILAMENT VOLTAGE
EMISSION VS FILAMENT VOLTAGE

TYPE 235

TYPE 235

PLATE CURRENT VS SCREEN GRID VOLTAGE
SCREEN GRID CURRENT VS SCREEN GRID VOLTAGE

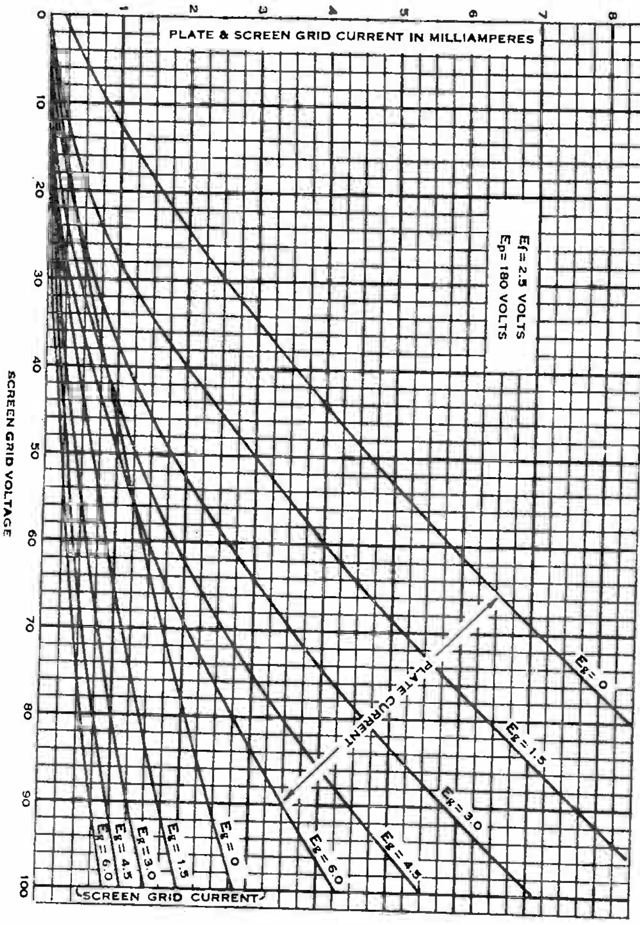

PLATE CURRENT VS GRID VOLTAGE
SCREEN GRID CURRENT VS GRID VOLTAGE

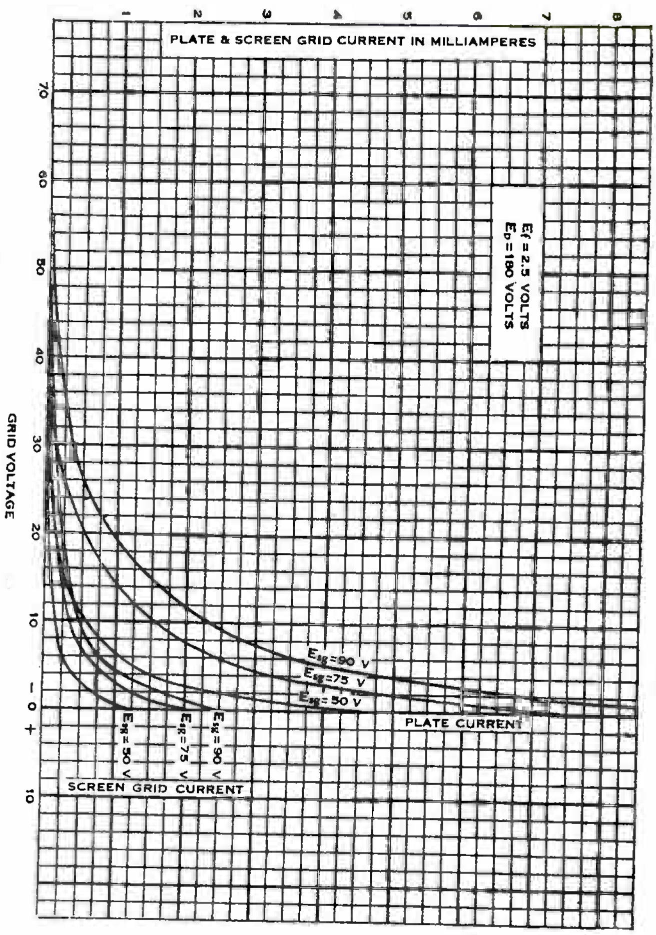

TYPE 232

FIL. CHARACT'STICS

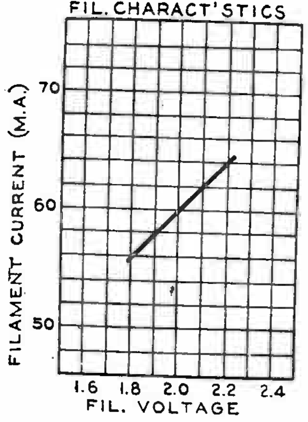

MUT. CHARACT'STICS

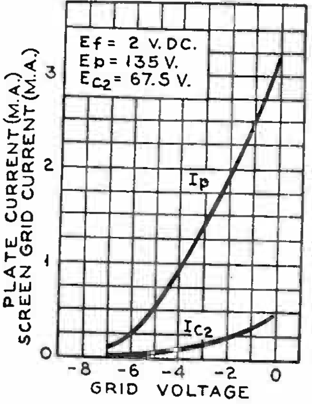

TYPE 232

INTER-ELECTRODE CHARACT'ISTICS

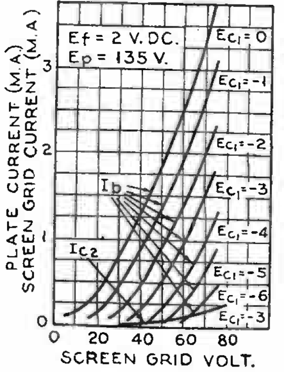

DETECTOR CHARACT'STICS

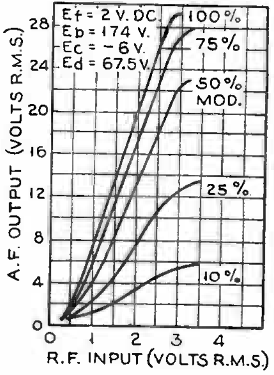

PLATE CHARACTERISTICS

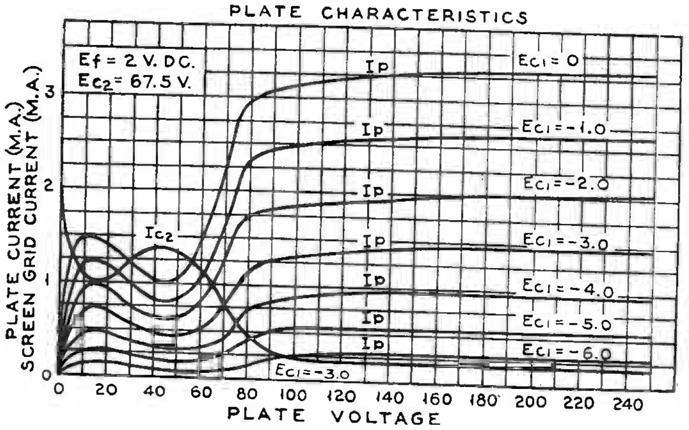

DYNAMIC CHARACT'STICS

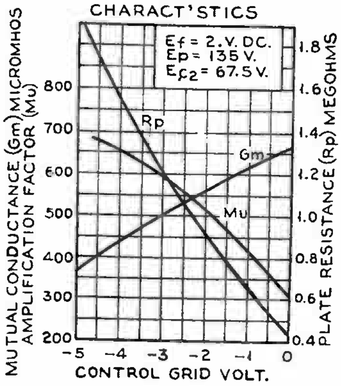

DYNAMIC CHARACT'STICS

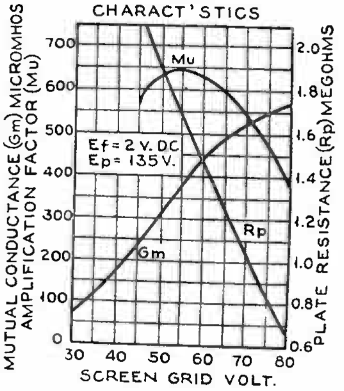

TYPE 237

PLATE CURRENT VS GRID VOLTAGE

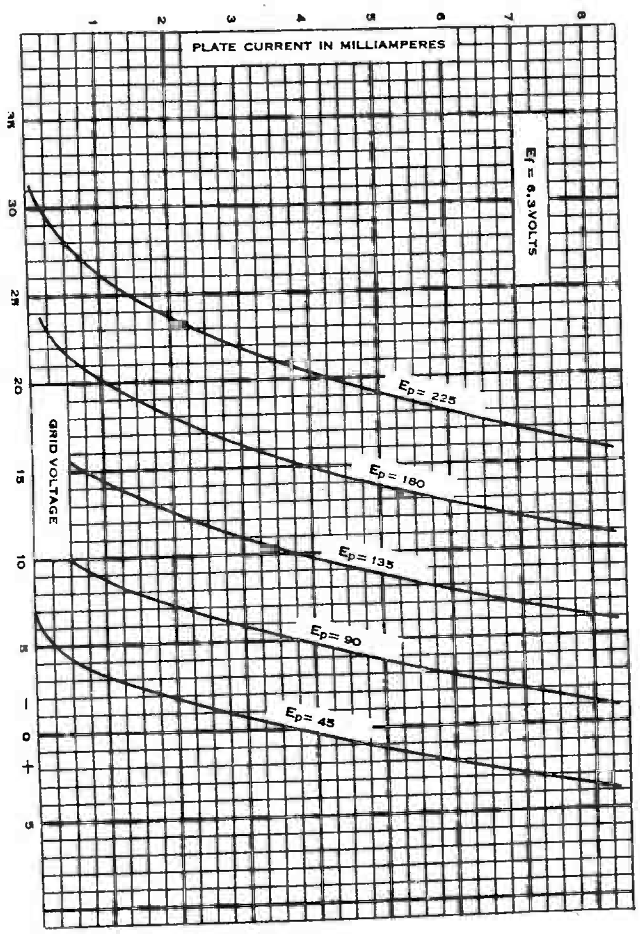

PLATE CURRENT VS PLATE VOLTAGE

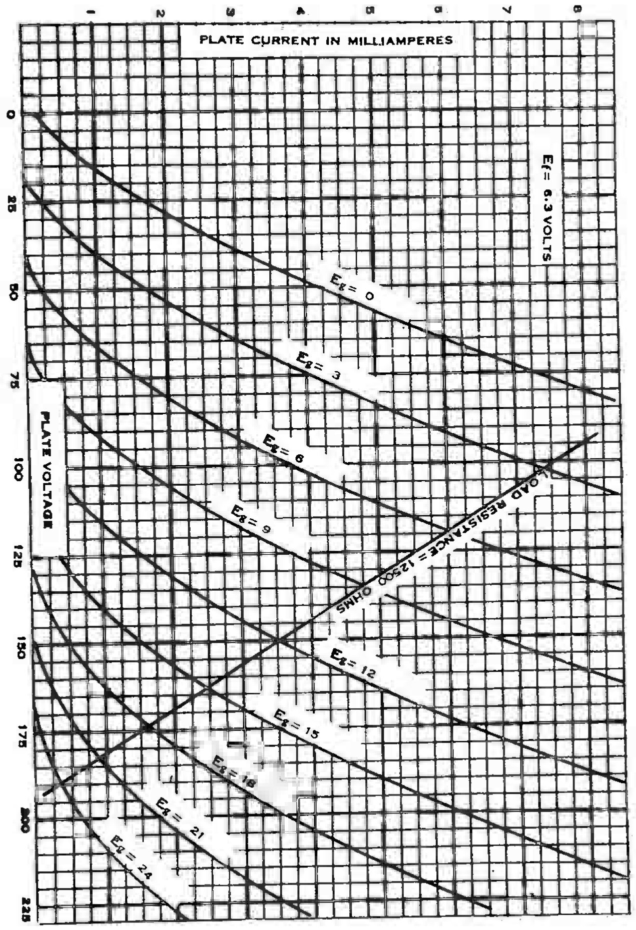

TYPE 237

MU VS GRID - PLATE VOLTAGES

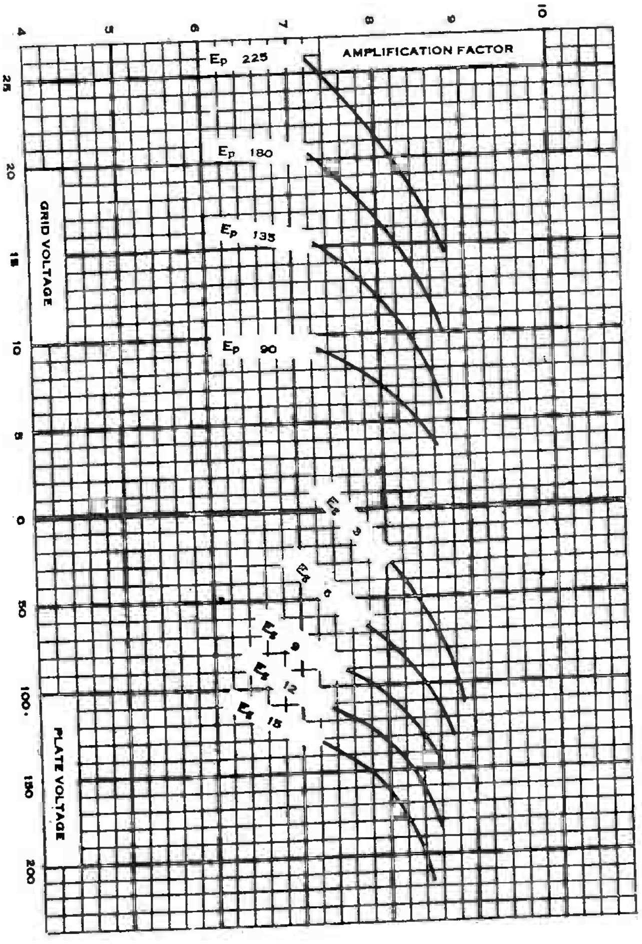

PLATE IMPEDANCE VS GRID - PLATE VOLTAGES

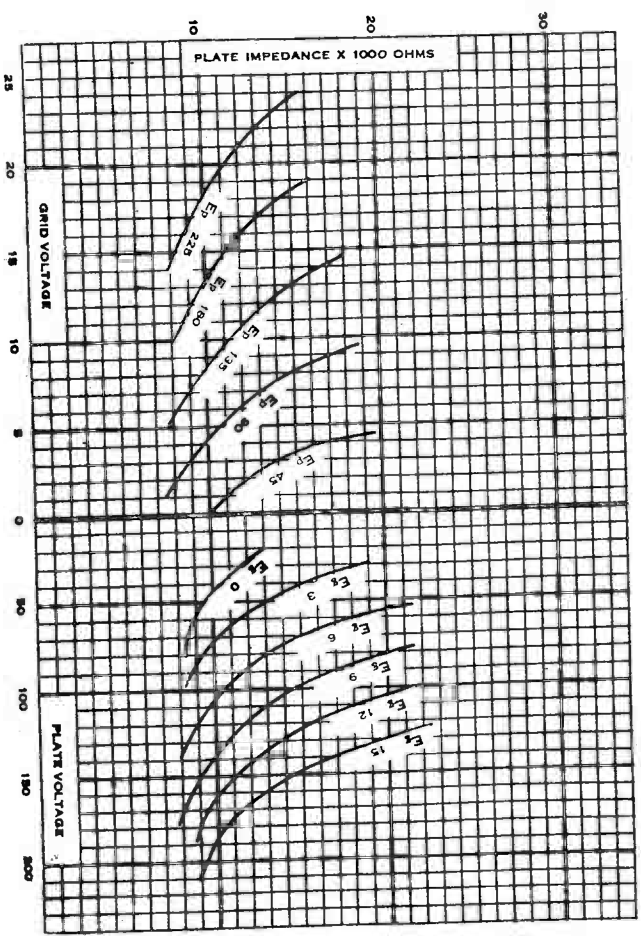

TYPE 245

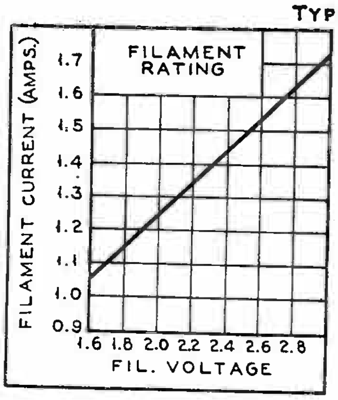

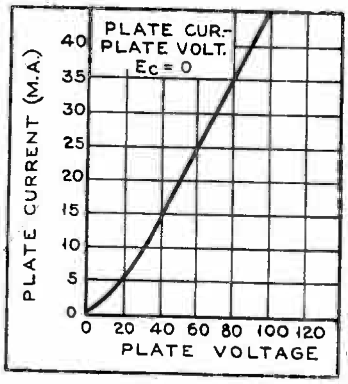

TYPE 245

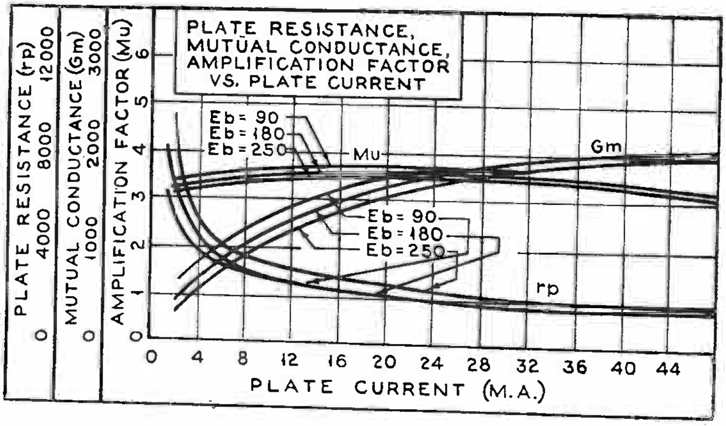

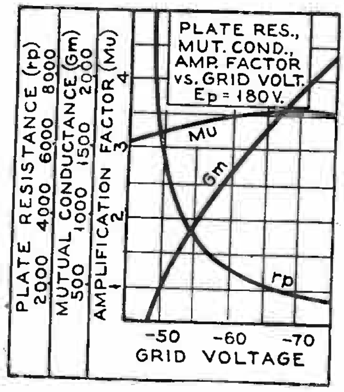

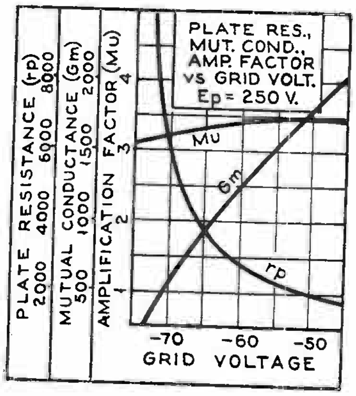

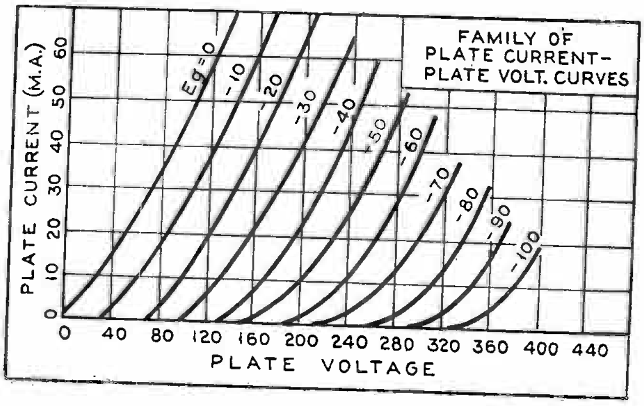

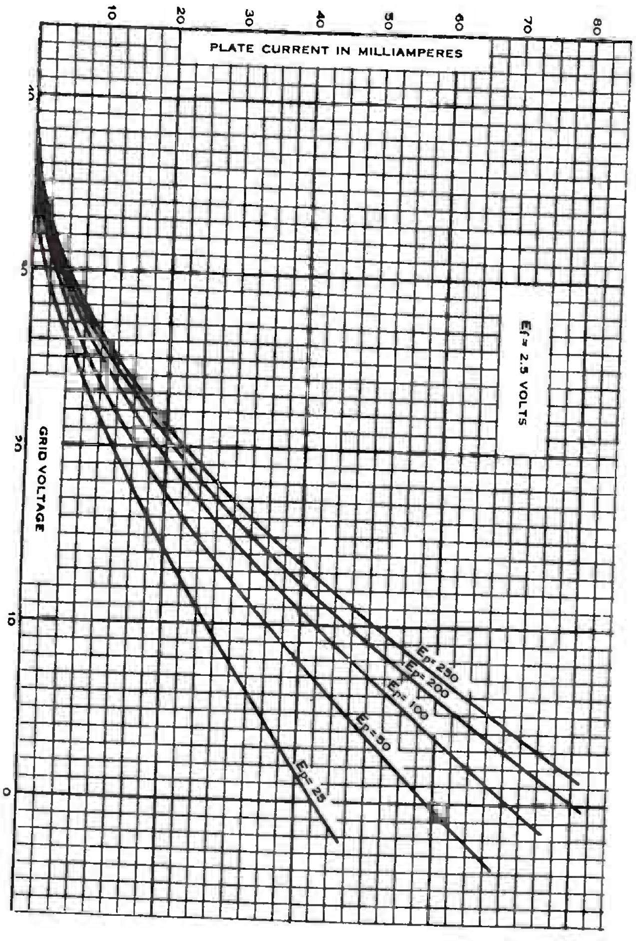

PLATE CURRENT VS GRID VOLTAGE

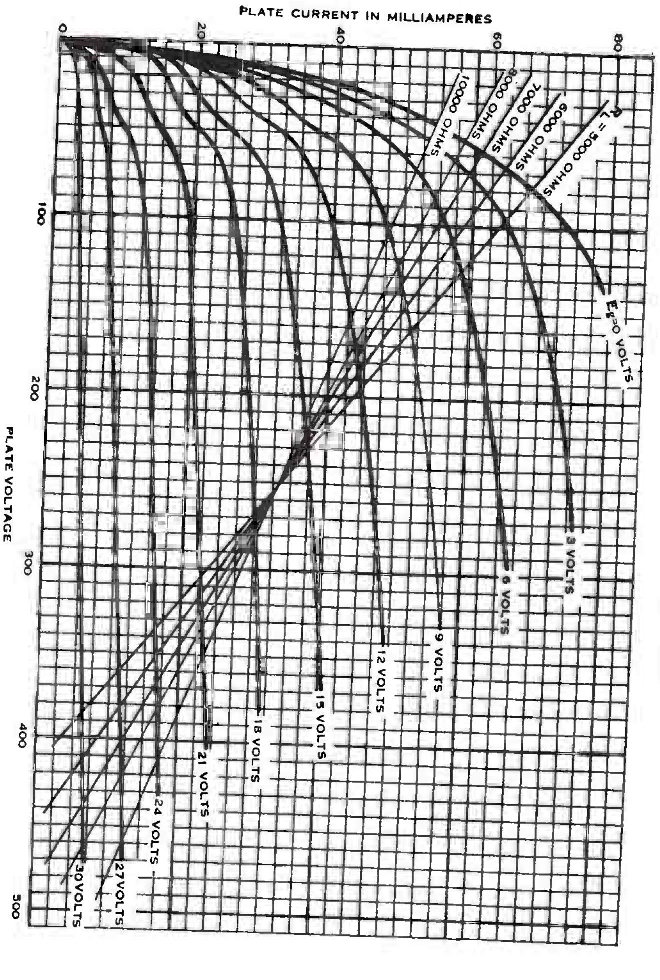

PLATE CURRENT VS PLATE VOLTAGE

TYPE 247

TYPE 250

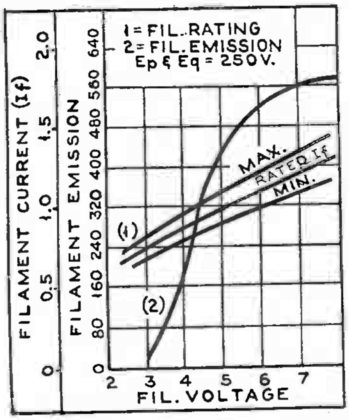

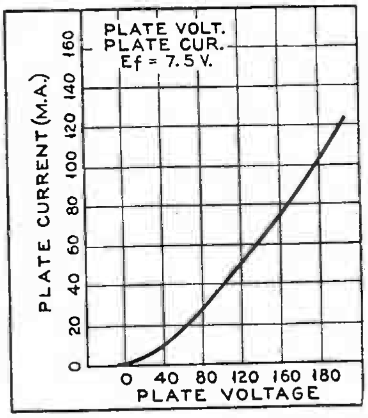

A.F. POWER STAGE

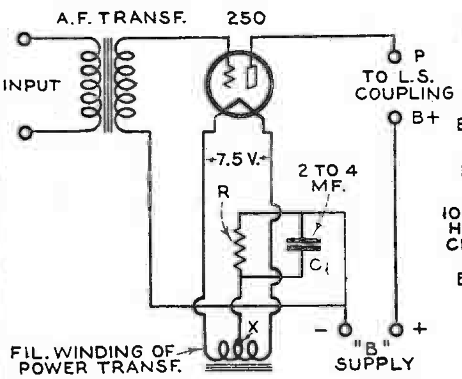

LOUDSPEAKER COUPLING

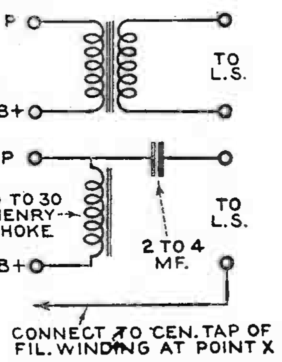

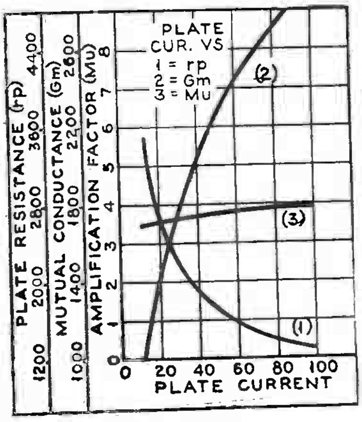

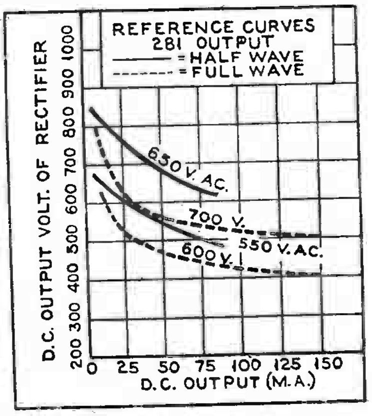

The 250 power amplifier tube radiates considerable heat during normal operation, and must not be used in a closed box or cabinet unless generous ventilating holes are provided. Also, it must not be connected directly to a loud speaker; an output transformer of suitable characteristics is required.

TYPE 280

FIL. CHARACT'STIC

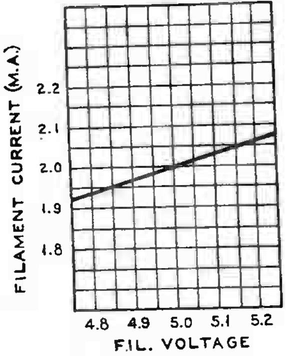

TYPICAL OPERATING CIRCUIT

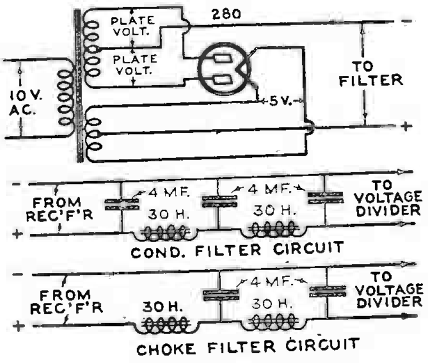

OUTPUT CHARACT'STICS (COND. INPUT FILTER)

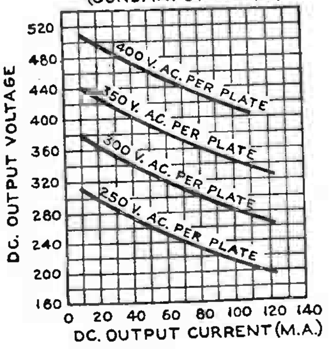

OUTPUT CHARACT'STICS (CHOKE INPUT FILTER)

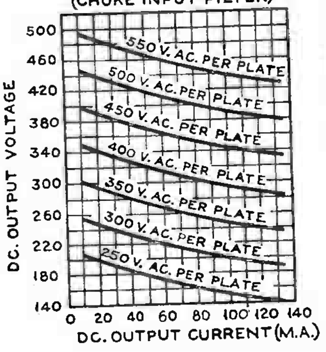

TYPE 281

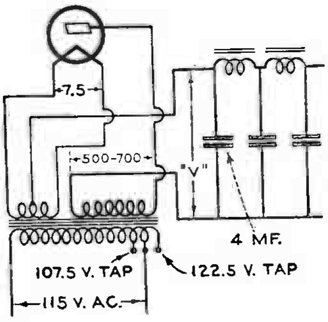

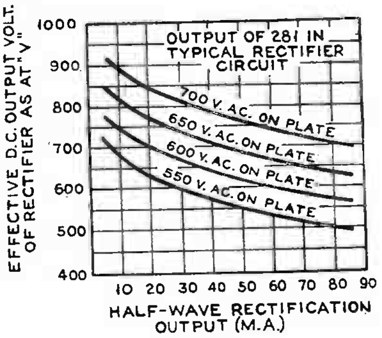

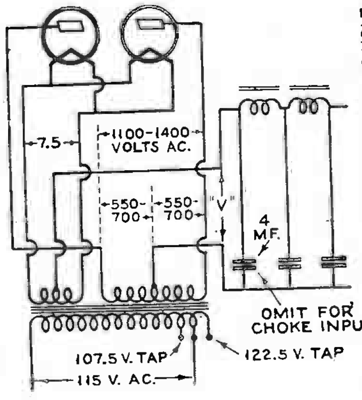

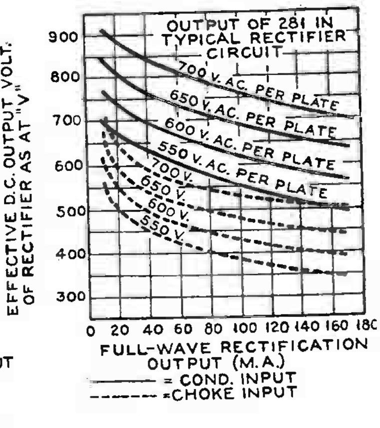

Radio Craft's Tube Table

DETECTORS AND AMPLIFIERS

Socket Connections	Symbol	Type	Purpose	Rating of Filament or Heater			Plate Volts	Bias Volts		Screen Volts	Plate Current in Ma.	A.C. Plate Res.	Mut. Cond. Mmhos.	Amp. Factor	Ohms Load	Power Output in Mw.
				Volts	Amps.	Supp.		D.C. Fil.	A.C. Fil.							
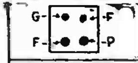		WD-11	Detector or Amplifier	1.1	.25	D.C.	90 135	− 4.5 − 10.0			2.5 3.0	15500 15000	425 440	6.6 6.6	15500 18000	7 35
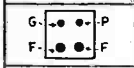		WX-12	Detector or Amplifier	1.1	.25	D.C.	90 135	− 4.5 − 10.5			2.5 3.0	15500 15000	425 440	6.6 6.6	15500 18000	7 35
		44	R.F.-I.F. Amplifier	6.3	.3	D.C. A.C.	135 180 250	variable −3 to −50	variable −3 to −50	90 90 90	6.25 6.4 6.5	250000 410000 600000	1030 1040 1050	257 426 630		
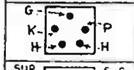	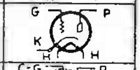	56	Detector Amplifier Oscillator	2.5	1.0	D.C. A.C.	250 250 90	− 20 − 13.5 0.0	− 20 − 13.5 0.0		2.0 5.0	9500 9500	1450 1450	13.8 13.8		
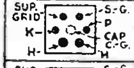		57	Biased Detector Amplifier	2.5	1.0	D.C. A.C.	250 250	− 6.0 − 3.0	− 6.0 − 3.0	100 100	.1 2.0	greater than 1.5 Meg.	1225	1500	250000	
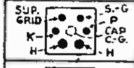		58	R.F.-I.F. Amplifier 1st Detector	2.5	1.0	D.C. A.C.	250 250	− 3.0 Min. − 10	− 3.0 Min. − 10	100 100	8.2	800000	1600	1280		
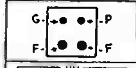		112A	Detector or Amplifier	5.0	.25	D.C.	90 135	− 4.5 − 9.0			5.2 6.2	5600 5300	1500 1600	8.5 8.5	5600 8700	30 115
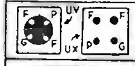	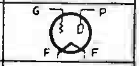	199	Detector or Amplifier	3.3	.06	D.C.	90	− 4.5			2.5	15500	425	6.6	15500	7
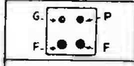		200A	Detector	5.0	.25	D.C.	45	Grid R to −	eturn Fil.		1.5	3000	666	20		
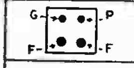		201A	Detector or Amplifier	5.0	.25	D.C.	90 135	− 4.5 − 9.0			2.3 3.0	11000 10000	725 800	8 8	11000 20000	15 55
	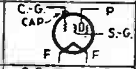	222	R.F. Amp. A.F. Amp.	3.3	.132	D.C.	135 135 180	− 1.5 − 1.5 − 1.5		45 67.5 22.5	1.5 3.3 .3	850000 600000 2 Meg.	350 480 175	300 290 350	.25 Meg.	
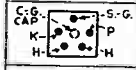	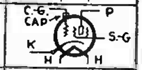	224 224A	R.F. Amp. Detector A.F. Amp.	2.5	1.75	A.C. D.C.	180 275 250	− 1.5 − 5.0 − 1.0	− 1.5 − 5.0 − 1.0	75 30 25	4.0 .1 .5	400000 2 Meg.	1050 500	420 1000		
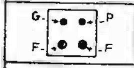		226	Amplifier	1.5	1.05	A.C. D.C.	90 135 180	− 5.0 − 8.0 − 12.5	− 6.0 − 9.0 − 13.5		3.8 6.3 7.4	8600 7200 7000	955 1135 1170	8.2 8.2 8.2	9800 8800 10500	30 80 180
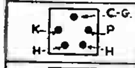		227	Detector Amplifier	2.5	1.75	A.C. D.C.	90 180 250	− 6.0 − 13.5 − 21.0	− 6.0 − 13.5 − 21.0		2.7 5.0 5.2	11000 9000 9250	820 1000 975	9.0 9.0 9.0	14000 18700 34000	30 165 300
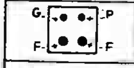		230	Detector or Amplifier	2.0	.06	D.C.	90	− 4.5			1.8	13000	700	9.3	15000	16
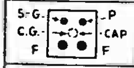		232	R.F. Amp. Detector	2.0	.06	D.C.	135 175	− 3.0 − 6.0		67.5 67.5	1.4 .2	1.15Meg	505	580		
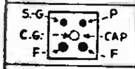		234	R.F.-I.F. Amplifier 1st Detector	2.0	.06	D.C.	67.5 90.0 135.0	−3 Mini	Volts mum	67.5 67.5 67.5	2.7 2.7 2.8	400000 500000 600000	560 580 600	224 290 360		
	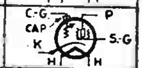	235	R.F. Amplifier	2.5	1.75	A.C. D.C.	180 250	− 1.5 − 3.0	− 1.5 − 3.0	75 90	5.8 6.5	350000 350000	1100 1050	385 370		
	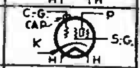	236	R.F. Amplifier	6.3	.3	D.C.	90 135	− 1.5 − 1.5		55 67.5	1.8 3.0	200000 300000	850 1050	170 315		
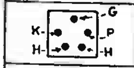	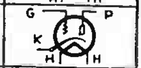	237	Detector or Amplifier	6.3	.3	D.C.	90 135	− 6.0 − 9.0			2.6 4.3	11500 10000	780 900	9.0 9.0	17500 14000	30 80
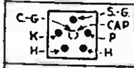	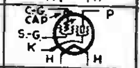	239	R.F.-I.F. Amplifier	6.3	.3	D.C.	90 135 180	−3 Mini	Volts mum	90 90 90	4.4 4.4 4.5	375000 540000 750000	960 980 1000	360 530 750		
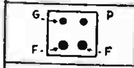	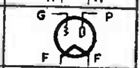	240	Voltage Amplifier	5.0	.25	D.C.	135 180	− 1.5 − 3.0			.2 .2	150000 150000	200 200	30 30	.25 Meg. .25 Meg.	
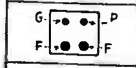	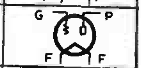	841	Voltage Amplifier	7.5	1.25	A.C. D.C.	425 1000	− 6 − 9	− 6 − 9		.7 2.2	63000 40000	450 750	30 30	.25 Meg. .25 Meg.	
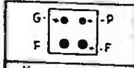	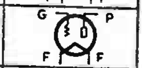	864	Detector or Amplifier or Oscillator	1.1	.25	D.C.	90	− 4.5			2.9	13500	610	8.2		
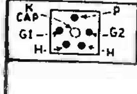	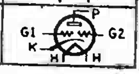	Wunderlich	Detector	2.5	1.0	A.C. D.C.	250	Grid	Leak		2–5	12000	1200	12.0	.1 Meg.	

OUTPUT POWER TUBES

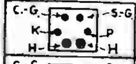		41	Power Pentode	6.3	.65	A.C. D.C.	125 167.5	− 10 − 12.5	− 10 − 12.5	125 167.5	11.0 16.5	150000 120000	1400 1800	210 215	13000 11000	650 1200
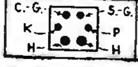	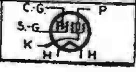	42	Power Pentode	6.3	.65	A.C. D.C.	250	− 16.5	− 16.5	250	34	100000	2200	220	9000	3000

Socket Connections	Symbol	Type	Purpose	Rating of Filament or Heater			Plate Volts	Bias Volts		Screen Volts	Plate Current in Ma.	A.C. Plate Res.	Mut. Cond. Mmhos.	Amp. Factor	Ohms Load	Power Output in Mw
				Volts	Amps.	Supp.		D.C. Fil.	A.C. Fil.							
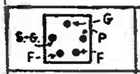	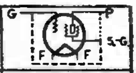	46	Power Amplifier	2.5	1.75	A.C. D.C.	300 400	0.0 0.0	0.0 0.0	Tied to Control Grid	4.0 6.0				1300 1450	8000 8000
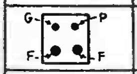		112A	Power Amplifier	5.0	.25	A.C. D.C.	135 180	− 9.0 − 13.5	− 11.0 − 16.0		6.2 7.6	5300 5000	1600 1700	8.5 8.5	8700 10800	115 260
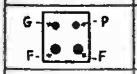		120	Power Amplifier	3.3	132	D.C.	90 135	− 16.5 − 22.5			3.0 6.5	8000 6300	415 525	3.3 3.3	9600 6500	45 110
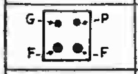	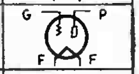	171A	Power Amplifier	5.0	.25	A.C. D.C.	90 135 180	− 16.5 − 27.0 − 40.5	− 19.0 − 29.5 − 43.0		12.0 17.5 20.0	2250 1960 1850	1330 1520 1620	3.0 3.0 3.0	3200 3500 5350	125 370 700
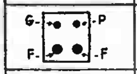		210	Power Amplifier-Oscillator	7.5	1.25	A.C. D.C.	250 350 425	− 18.0 − 27.0 − 35.0	− 22.0 − 31.0 − 39.0		10.0 16.0 18.0	6000 5150 5000	1330 1550 1600	8.0 8.0 8.0	13000 11000 10200	400 900 1600
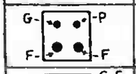	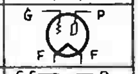	231	Power Amplifier	2.0	130	D.C.	135	− 22.5			6.8	4950	760	3.8	9000	150
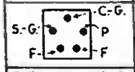	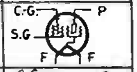	233	Power Amplifier	2.0	.26	D.C.	135	− 13.5		135	14.0	50000	1500	75	7000	700
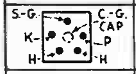	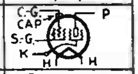	238	Power Amplifier	6.3	.3	D.C.	135	− 13.5		135	9.0	102000	975	100	13500	525
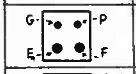		245	Power Amplifier	2.5	1.5	A.C. D.C.	180 250 275	− 33.0 − 48.5 − 54.5	− 34.5 − 50.0 − 56.0		27.0 34.0 36.0	1900 1750 1670	1850 2000 2100	3.5 3.5 3.5	3500 3900 4600	780 1600 2000
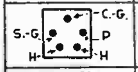		247	Power Amplifier	2.5	1.75	A.C. D.C.	250	− 16	− 16.5	250	32.0	35000	2500	90	7000	2500
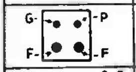		250	Power Amplifier	7.5	1.25	A.C. D.C.	250 450	− 41 − 80	− 45 − 84		28.0 55.0	2100 1800	1800 2100	3.8 3.8	4300 4350	1000 4600
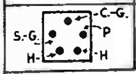	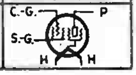	LA	Power Amplifier	6.3	.3	D.C.	135 165	− 9.0 − 11.0		135 165	12.0 17.0	52700 50000	1900 2100	100 100	9500 8000	700 1200

RECTIFIERS

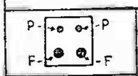	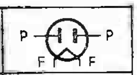	82	Full-Wave Rectifier	2.5	3.0	A.C. D.C.	Maximum A. C. Volts (R. M. S.)......500 Volts Maximum D. C. Output Current......125 Milliamperes Tube Voltage Drop..................15 Volts
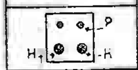	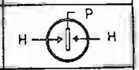	BA	Full-Wave Rectifier	Has	No Fil	ament	Maximum A. C. Volts (R. M. S.) ......350 Volts (per plate) Maximum D. C. Output Current ......350 Milliamperes Maximum D. C. Output Voltage ......300 Volts
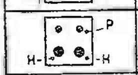	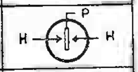	BH	Full-Wave Rectifier	Has	No Fil	ament	Maximum A. C. Volts (R. M. S.) ......350 Volts (per plate) Maximum D. C. Output Current ......125 Milliamperes Maximum D. C. Output Voltage ......300 Volts
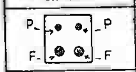	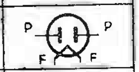	280	Full-Wave Rectifier	5.0	2.0	A.C. D.C.	Maximum A. C. Volts (R. M. S.)......350 Volts Maximum D. C. Output Current......125 Milliamperes
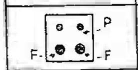	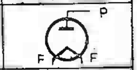	281	Half-Wave Rectifier	7.5	1.25	A.C. D.C.	Maximum A. C. Volts (R. M. S.)......700 Volts Maximum D. C. Output Current. ..... 85 Milliamperes
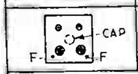	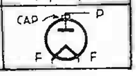	866	Half-Wave Rectifier	2.5	5.0		Maximum Peak Inverse Voltage.......7500 Volts Maximum Peak Plate Current.......... 600 Milliamperes

VOLTAGE REGULATORS

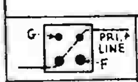	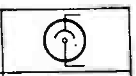	874	Voltage Regulator	Operating Voltage........ 90 Volts Starting Voltage..........125 Volts Operating Current.........10–50 Milliamperes
	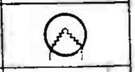	876	Current Regulator (Ballast Tube)	Operating Current.........1.7 Amperes Voltage Range.............40–60 Volts
	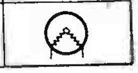	886	Current Regulator (Ballast Tube)	Operating Current.........2.5 Amperes Voltage Range............ 40-60 Volts

TUBES FOR TRANSMITTING AMATEURS

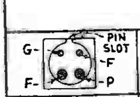	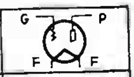	211	General Purpose	10.0	3.25	A.C. D.C.	1000	− 55	− 55		72	3400	3530	12		75 watts nom.
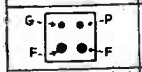		841	Oscillator	7.5	1.25	A.C. D.C.	350 450	− 5.0 − 8.0	− 5.0 − 8.0		43 36	21500	1400	30		Peak 16 watts
	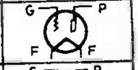	845	A. F. Amplifier or Modulator	10.0	3.25	A.C. D.C.	1000	−150	−150		75	2100	2380	5		Peak 100 watts
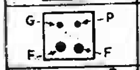		852	Oscillator or R. F. Power Amplifier	10.0	3.25	A.C. D.C.	2000	−150 −250	−150 −250		85 100			12		120 100 watts
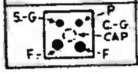		865	Oscillator or R. F. Power Amplifier	7.5	2.0	A.C. D.C.	500	− 40 − 75	− 40 − 75	125 125	30 60			150		7.5 7.5 watts

CHAPTER VIII

Interference and its Elimination

Static, Noises and Hum are the Causes of Many Service Complaints. Various Methods of Combatting this Interference are Outlined in This Chapter.

Causes and Cure of Radio Interference

THE term "interference," in the broadest radio sense of the word, means that sounds emerge from the reproducer which are not a part of the desired signal, but form a disturbing background. They are usually unintelligible sounds which may be described as crackling, sputtering, squealing, or queer whirring and buzzing noises. The cause of many of these disturbing sounds that detract from the radio program is readily understood; while that of others is recognized, usually, only by the service man who has actually become experienced in this phase of the work.

The causes of radio interference may be classified under the six headings which follow:

(1) Broadcast transmitters radiating energy on the same, or nearly the same, wavelength;
(2) Nearby powerful broadcast stations;
(3) A neighboring receiver which, in an oscillating condition, will act as a miniature transmitter;
(4) Electrical atmospheric disturbances arising in space, and commonly known as "atmospherics," or "static";
(5) Faulty parts of a receiver, at times causing disturbing noises;
(6) Lastly, interference which originates from commercial electrical machines, power lines, trolley cars, elevated systems, subways, home electrical appliances, and electrical apparatus used in the professional fields, such as X-ray and violet-ray equipment.

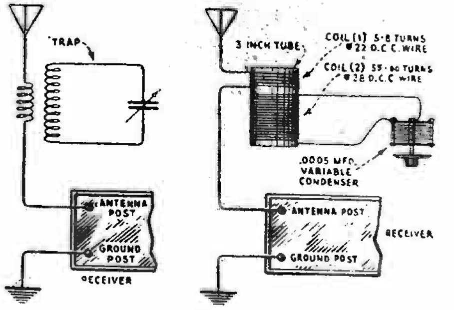

Fig. 1

The "absorption" type of wavetrap; to eliminate powerful local interference it may be necessary to increase, to 15 or 18, the number of turns in coil 1.

Whistling, Pig-Squeals, etc.

Interference of the nature outlined under No. 1 may be due to transmission problems or to lack of selectivity in the receiver. By "transmission problems" are meant the possible faults in frequency-control devices of transmitting equipment, or that two stations are operating on or about the same frequency at the same time, or on frequencies not separated by at least ten kilocycles. The effect of this is shown in Fig. 1B.

Conditions of the latter kind, however, are rapidly disappearing because of the cooperative work of the Radio Commission and the officials of broadcast stations. (Reallocation of wavelengths, and maintenance of a more active watch on frequency-control devices, are major cures.)

A shrill whistle which forms a background to the program being received may be caused by broadcast stations within ten kilocycles of the desired station. These two different *radio-frequency* currents pass simultaneously through the receiving circuit, producing an entirely new frequency which is *audible.* The production of this third frequency, or *beat note,* when one frequency is superimposed upon another, is called *heterodyning.* This phenomenon explains the meaning of the expression, "the heterodyning of two stations."

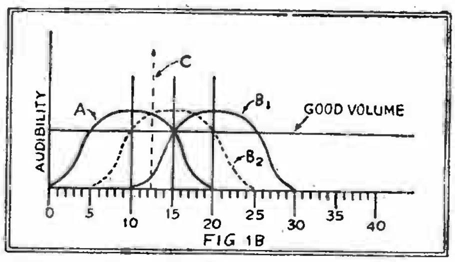

With one tuned circuit, two stations fully ten kilocycles apart interfere; a lessened separation, as at B2, causes high continuous whistles.

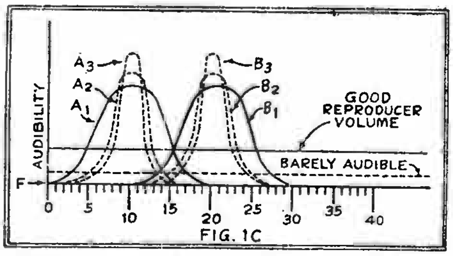

With the same station separation as in Fig. 1B, the greater selectivity obtained from additional tuned R.F. circuits B2 and B3 permits louder reproduction with less interference.

From this analysis, one realizes that the service man is not expected to correct troubles of this nature. These difficulties must be removed by the engineers of the stations at fault, though the selective receiver, confining its action to a ten-kilocycle tuning band, plays an important part in eliminating interference coming under this classification.

When Sensitivity Is Not Desirable

At times, *the sensitivity of a receiver affects its selectivity.* Hence, a receiver of very sensitive design will usually make an interfering signal audible under conditions where a less sensitive receiver will not reproduce the interference. The procedure to adopt, when interference is experienced with an extremely sensitive receiver, is to reduce the sensitivity of the receiver by adjustment of the controls provided on the particular set.

With a selective circuit tuned to a predetermined frequency, any other frequency above or below the specified frequency will find reactive forces at work which will cause a greater *attenuation;* that is, dwindling or dying out of currents at frequencies other than those which the circuit is tuned to pass. (See Figs. 1D and 1E.) It is upon this principle, among others, that the radio broadcast receiver is designed.

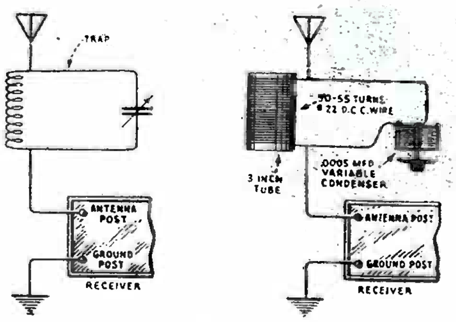

Fig. 2

The "rejector" wavetrap is extremely effective in reducing signal interference; but it also causes a reduction in the strength of desired signals.

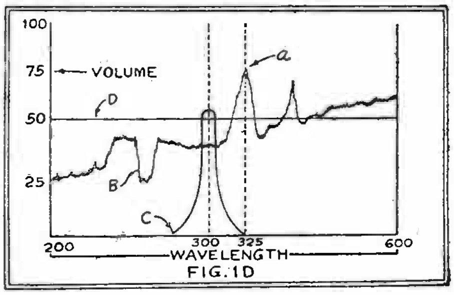

FIG.1D

Selectivity may be advanced to the point of distortion; static is, however, thus excluded except on the narrow waveband the circuit passes. (A, static; B, surge; C, program; D, good volume.)

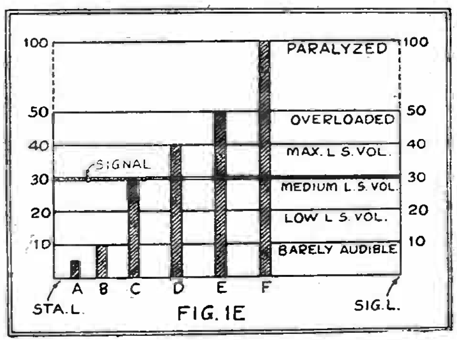

FIG. 1E

Taking the "signal level" as 30, and "static level" as lettered, interference has the effect shown; a powerful local signal also may paralyze the first R.F. tube.

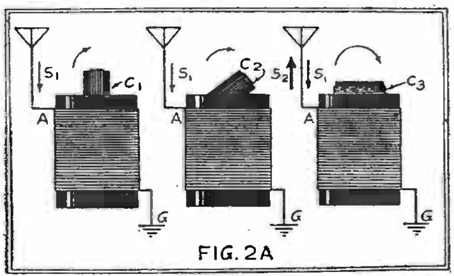

FIG. 2A

When the rotable (tickler) coil in the detector's plate circuit is at C1, reception is normal; at C2, it gives regeneration and sensitivity increases up to a "spill over." At C3 it makes the circuit oscillate and radiate a disturbing signal S2.

A receiving circuit, however, which incorporates only one tuned circuit will prove inadequate in providing fine selectivity because of present-day interference problems; ten-kilocycle selection is the necessity for clear reception.

Selectivity in Interference Elimination

This is obtained by coupling together a series of "tuned radio-frequency stages." By this system the desired frequency is selected, each tube amplifying this frequency only; while current of the undesired frequency is materially weakened as it passes through each successive tuned stage (Fig. 1C).

Receivers used for radio broadcast reception may be classified as follows:

(1) Those which utilize one stage of tuned radio frequency, and variable regeneration.

(2) Those which utilize three stages of tuned radio frequency without effective balancing of coupling between the radio-frequency stages; each stage, however, being heavily damped by what is termed the "grid-suppressor" method, which prevents oscillation between the R.F. circuits.

(3) Those which utilize three radio-frequency stages without the grid-damping resistors, but effect more or less complete balancing of interstage coupling between the radio-frequency stages.

(4) Superheterodyne receivers.

Receivers in the first classification are more selective than those consisting of a detector and audio-frequency amplification only. Class 2 has a higher degree of selectivity than class 1; and greater selectivity may be attained with class 3 or 4 than either of the preceding.

Individual receivers, however, may vary in the degree of selectivity they are supposed to possess, regardless of their design, and especially when located in close proximity to a powerful broadcast station. Those most subject to interference because of their location to a nearby powerful broadcast transmitter are of class 1 or others not described here (such as the "single-circuit" type, and some home-constructed sets). The majority of receivers outlined under 2, 3 and 4 are factory products, and little or no trouble will be experienced with them.

Occasionally, however, any receiver will be lacking in capability to select a particular frequency to the exclusion of others, especially when it is located close to a powerful transmitter. When this is the case, a device known as a "wavetrap" may be employed to overcome the difficulty.

About Wavetraps

A wavetrap is a device designed to reduce or eliminate radio interference when this is caused by stations other than the one desired. There are two principal types; one is known as the "absorption" ("acceptor") type, and the other is the "rejector."

A diagram of the former appears in Fig. 1. As shown, there are two coils wound in a three-inch form in such a manner that inductive coupling is provided between the two windings. The small coil consists of from 5 to 8 turns of No. 22 D.C.C. wire closely wound; this is connected directly in the antenna as shown.

The large coil is wound with 55 to 60 turns of No. 28 D.C.C.; a .0005-mf. variable condenser is connected across this coil.

The degree of coupling between these windings affects both the elimination of the interfering signal and the position of the tuning controls of the receiver. To obtain *close coupling,* wind coil 1 close to coil 2, thus decreasing the distance between them. This will materially aid in eliminating the interfering signal; but it usually has a considerable effect upon the position of the tuning controls of the receiver.

To effect *loose coupling,* wind coils 1 and 2 with an open space between the two windings.

The correct spacing between the two coils, for satisfactory elimination of the interfering signal with the least change in the receiver controls from their normal tuning position, is learned by experiment and, when once found, should be made permanent.

To use the wavetrap, set its condenser at zero, tune the receiver until the interfering signal is received with maximum volume; then rotate the trap condenser until the undesired signal is reduced to minimum strength. Carefully readjust the receiver controls to the interfering signal a second time, and readjust the trap's condenser until the undesired signal entirely disappears or is reduced to minimum intensity. The wavetrap control is then left in this position as long as this particular frequency is to be eliminated. The receiver is operated in the usual way, to select the desired signals.

Theory of the Wavetrap

The wavetrap functions as a resonant circuit to permit alternating current to flow at a certain frequency. By varying the capacity of the variable condenser the *capacitative* reactance (condenser opposition) is made equal to the *inductive* reactance (coil opposition); thus cancelling out these two forms of opposition which oppose current flow at a particular frequency. The circuit is then reduced to one possessing only *ohmic* resistance (that of the wire itself) thereby allowing the maximum current flow. The purpose of the "absorption" wavetrap in Fig. 1 is to absorb the particular undesired frequency to which it is tuned, so that little or none of it will reach the receiver.

A view and schematic diagram of a "rejector" type wavetrap is shown in Fig. 2. It is composed of a three-inch tube, on which are closely wound 50 to 55 turns of No. 22 D.C. wire, and a .0005-mf. variable condenser connected in parallel with the coil. The operation of this wavetrap is identical with that of the type just decribed, and it has practically the same effect upon the tuning of the receiver.

The circuit consists of an inductance (coil) and capacity (condenser) connected in parallel; this combination, in turn, is connected *in series* with the antenna. By means of the variable condenser it is possible to adjust the trap circuit to resonance with the frequency of the interfering signal. When this condition is obtained the trap circuit offers the least impedance to the interfering signal frequency and "by-passes" it from the main antenna circuit, thereby allowing it to flow back and forth between the condenser and coil. In this manner the undesirable frequency is prevented from entering the receiving circuit. This arrangement is most successful when the antenna is exceptionally long, or the receiver is connected to a poor ground. This wavetrap, therefore, can be advantageously used in conjunction with the more or less non-selective types of receivers which are located near broadcast stations.

Oscillating Receivers

Regeneration is the process of feeding back energy from the plate to the grid of a vacuum-tube circuit. This is permissible and, in fact, an asset to a receiver. When carried beyond a certain point, however, regeneration (in the proper sense of the word) ceases; and the receiving circuit becomes an *oscillating* circuit. As such it is a *generator* of high-frequency oscillations; in this condition it is in reality a *transmitter.* (See Fig. 2A.)

The power of the radiated energy from an oscillating receiver is weak when compared to that of a broadcast transmitter; yet it radiates sufficient energy, occasionally, to destroy a broadcast program being received by a neighboring set, if the two sets are tuned to the same program. Manufacturers of modern receivers employing a regenerative detector always design the circuit so that oscillations of this nature are prevented from reaching the antenna; but some of the earlier types of receivers were not designed to take care of such a condition.

If a shrill whistle is heard, at time breaking into the program with a violent chirp, and at other times gradually rising and falling in pitch when the controls of the receiver are not being manipulated, it is a fair indication that someone in the immediate neighborhood is operating a receiver in an oscillating condition. As the trouble is due to improper operation of the set, the only remedy is to locate the owner of the offending set and inform him of the interference he is creating.

"STATIC!" How often we have heard that word! And, because static electricity concerns us at this time, we should know something more about it. "Atmospherics" and "static" are synonymous expressions for the roaming electrical phenomena which nature produces.

The atmosphere of the earth is filled at all times with what are termed "charges of free electricity" (static electricity). Its exact origin remains one of the secrets of nature.

A most vivid manifestation of the presence of static charges in the air is seen during thunderstorms; the lightning seen at such times is the discharge between the clouds and earth (and between cloud and cloud) of a great accumulation of static electricity. A discharge of this nature is immediately made known by the emission of a characteristic crashing noise from the loud speaker. We say this noise is caused by *static.*

Fine weather may prevail at the location of the receiver; but the lightning discharges of a distant storm (thousands of miles away) will still affect a sensitive receiver.

Carriers of Static Charges

When listening-in to a program during a rain or snow-storm, it is not an uncommon occurrence to receive a slight hissing sound.

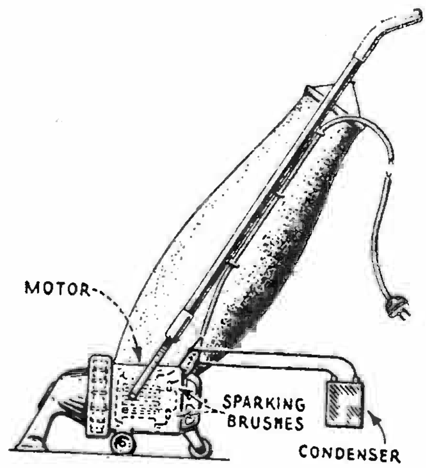

Fig. 10

A ½-mf. condenser, alone, as in Fig. 4, will deal with the type of "universal" motor used in a cleaner of this kind.

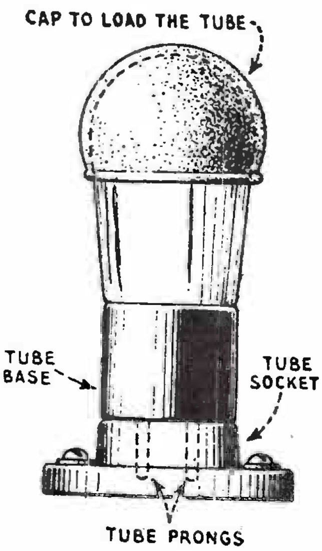

Fig. 3

The "howl arrestor" used with a microphonic tube simply keeps it from vibrating freely, and thus shaking its loose elements.

The raindrops and snowflakes are carriers of minute static charges and, as one comes in contact with the aerial wire, it imparts its charge to the aerial system. Each of these charges sets up a minute current which passes through the receiving circuit to earth, producing in the tuned circuit a slight oscillatory impulse which, in turn, is emitted from the speaker as a hiss.

In dry hot weather the air is filled with small dust particles. These are also carriers of static charges which, on striking the aerial, give up their accumulated charges and produce interfering effects.

Other characteristic noises heard from the reproducing unit of a receiver, because of the effect of charged particles striking the aerial, are irregular "clicking" sounds or crashes resembling that which would be heard on throwing pebbles against a wall.

From the foregoing paragraphs it is understood that atmospheric disturbances which affect the reception of radio broadcast programs originate from different sources; and create interference on *all wavelengths.*

Many devices have been invented in an attempt to eliminate or appreciably reduce "static"; but so far the only practical methods are those of employing loosely-coupled circuits and short antennas, and of using a loop. Static eliminators which have produced encouraging results are so elaborate as to prohibit their general use with broadcast receivers.

(We may remark that almost every radio experimenter has tried at one time or another to invent a "static" eliminator, if we may judge from our correspondence. The trouble is in the nature of broadcast reception, which demands reception from all directions—commonly with a fixed aerial—and reproduction of a wide band of audio frequencies. A radio-telegraph system, used often from "point to point," has a very narrow frequency-band.—*Editor.*)

Noise Originating in the Receiver

Some noises which interfere with a broadcast program are thought to be caused by static; when, in reality, they originate in parts of the receiver! It is much better to classify such interference as plain noise; because static, strictly speaking, is the result of an antenna system absorbing electrical disturbances present in the atmosphere. Receiver noises are due to faulty units of the set, its accessories, poor design, and careless construction work.

If the "on-off" switch becomes worn, the worn switch contacts are subject to minute vibrations which may cause the filament circuit to open and close; and the result will be a continual series of scratchy sounds. A loss in sound intensity also may result.

Plates of variable condensers which become bent from any cause will short-circuit the unit if the bent plate touches one on the opposite side. When this condition occurs, a click or rasping sound will be heard from the loud speaker, or the signals will suddenly disappear when the condenser dial is rotated.

Faulty flexible leads to a movable coil will produce crackling noises when the knob is rotated.

Partially broken plate leads in the receiver will produce loud clicking noises. Poor "B" battery connections will produce the same effect.

Storage-battery terminals often become corroded and, if the corrosion becomes excessive, it will completely prevent the flow of current. The increased resistance to the circuit caused by battery-terminal corrosion will cause a faint high-pitched whistle in some receivers.

Any corroded, poorly soldered joint will cause undesirable noise.

Excessive dirt or dust accumulations around open wiring, between condenser plates, or on the spring contacts of tube sockets, is often the source of crackling sounds.

The elements of inferior tubes will often cause weird noises after they have been in operation for a short time. The reason is found in imperfect contacts or poor evacuation.

Defective grid leaks often cause crackles, sputtering and strange sounds which the experienced service man will recognize as being caused by such.

"Popping" which occurs at more or less regular intervals may be due to a grid leak of incorrect value. If this trouble is experienced, try to eliminate the popping by substituting several grid leaks of different values.

The Microphonic Tube

"Howling" may occur when the receiver cabinet or any of its controls is touched, or it may occur even when no one is near the receiver. This sound is usually caused by a "microphonic" tube. Two remedies are the purchase of a new tube or placement of the

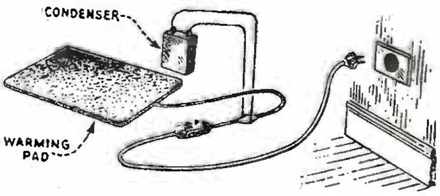

Fig. 12

The heating pad, using the make-and-break regulator of Fig. 13, should have a one-mf. condenser, as close up to the thermostat as possible.

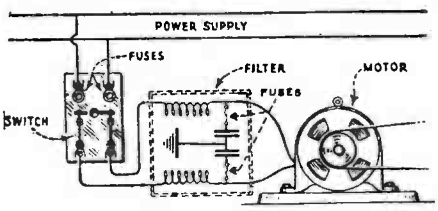

Fig. 11

A motor, such as a washing machine employs, is shown here with a filter of the type of Fig. 8.

reproducer in another location.

Another remedy, a makeshift—but very often successful in preventing microphonic-tube howl—is to "load" the tube with a heavy cap slipped over it (Fig. 3). Spring sockets also tend to absorb shocks and vibrations which might cause the tube elements to vibrate. The vibration period of a tube, when weighted down with a heavy cap, is perhaps only seven or eight times a second. A sound vibration of so low a pitch, and of the intensity caused by microphonic contacts, is far below the audibility range and will not be heard in the loud speaker.

The new A. C. tubes rarely show microphonic tendencies.

Let us explain why microphonic trouble occurs with one tube but not another. A "microphonic tube" is simply an ordinary tube in which one or more of the elements are loosely mounted when assembled. It is essential that all of the tube elements (grid, plate and filament) should be mounted and supported so that a rigid, fixed relation is maintained between them. If any of the elements vibrate, the spacing between them changes and thus the normal characteristics of the tube are changed.

For example, a tube having a low voltage-amplification factor is constructed with the grid and plate elements mounted close together; whereas in a tube having high voltage amplification the grid is placed comparatively close to the filament and at some distance from the plate. If sound vibrations cause a tube to move, then any loose elements within will also move. Any change in the distance between these elements will cause the value of the plate current to be affected in proportion. The plate current variations are then magnified by the amplifying stages following the microphonic tube and are reproduced in the loud speaker as a swinging howl, varying in pitch according to the vibration period of the tube elements. In some cases interchanging tubes in their sockets will make the set workable. However, a tube having extreme microphonic tendencies should be thrown out.

Sparking-Device Interference

When a spark discharge occurs in an electrical circuit, interference may result. We call this "inductive interference."

When it is realized that every small electric spark, created by any electrical machine or apparatus, produces electrical waves of various frequencies, it is at once apparent that the antenna system of a radio receiver will intercept such waves, and convey them to the receiver in precisely the same manner as it does the high-frequency energy radiated from a broadcast transmitter. Since a microscopic spark is a possible source of interference, we find innumerable types of apparatus capable of causing trouble. To classify every conceivable kind of suspected machine or piece of apparatus would require a huge volume. The following list, however, gives a comprehensive idea of where to look for possible causes of interference. Automatic oil burners, electric washing machines, warming pads, electric refrigerators, clapper switches on elevator controls, electric vibrators, X-ray machines, motors operating dental equipment, violet-ray apparatus, bare power lines swinging against tree branches, telephone ringers, electric door bells and buzzers, trolley cars and elevated systems, farm lighting systems, high-voltage laboratory equipment, vacuum cleaners, electric sign flashers, defective lamp sockets, rapidly-moving leather belts, electric player-pianos, rotary converters, motion-picture equipment, defective electric flatiron plugs, arc lamps, ignition systems, fused outlet boxes.

Remember that sparking is caused by the interruption of current flow during the operation of certain kinds of electrical apparatus, especially those designed to operate with a "make-and-break" mechanism.

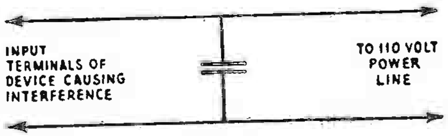

Fig. 4

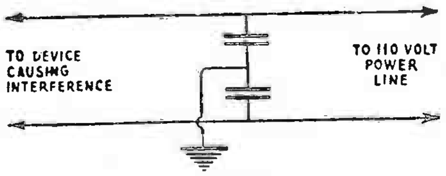

Fig. 5

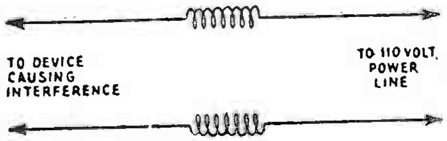

Fig. 6

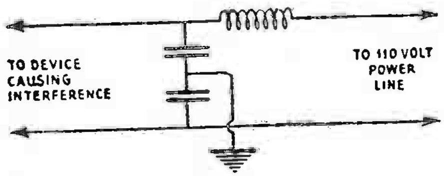

Fig. 7

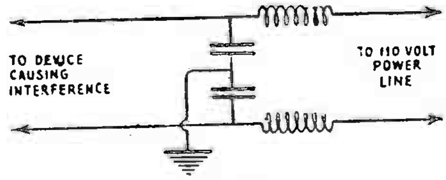

Fig. 8

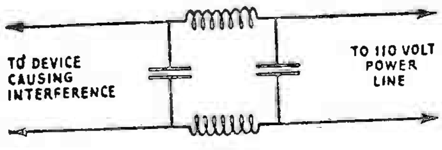

Fig. 9

These six filter types deal with interference of increasing degrees of difficulty. In each case, the problem is finding a capacity which will by-pass the R.F. current generated by the device served, because of the impedance on either side of it. In Fig. 6, the inductances may cause the self-capacity of the device itself to act as a sufficient by-pass.

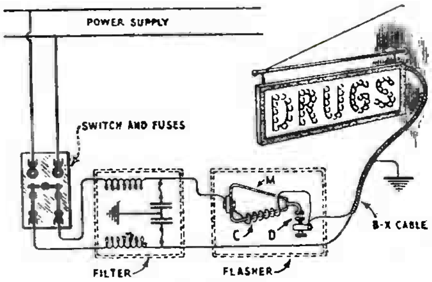

Fig. 14

A flashing sign, operated by a thermostatic switch, will require a filter of greater current-carrying capacity than a small motor.

Electric motors of all kinds are possible causes of interference. Sparking is generally produced in motors because of poor contact between incorrectly fitting brushes and the revolving commutator segments, or other contacting arrangements.

Thermostatic control devices, bell-ringing apparatus, and sign flashers are sources of considerable trouble. Thermostatic devices cause interference because their operation depends upon the "make and break" of the circuit by means of contacts.

Poor connections in the wiring of lamp sockets, flatirons and electric toaster plugs, unsoldered or loosely-made splices, or the discharge or leaking of electrical energy to ground because of faulty insulators, are all possible sources of interference which usually manifests itself as "crackles."

The interference caused by high-frequency energy, transmitted when spark discharges take place, becomes increasingly objectionable as the intensity of the spark increases. A sudden variation in the strength of current flowing through a circuit, usually due to some fault in the circuit, will cause an effect known as a "surge." When a surge occurs, a wave-motion of many frequencies is set up in the space surrounding the particular circuit. A power line in which trouble of this kind exists will act like a transmitting antenna; because the long wire or wires assists in the radiation of an interfering wave of this nature which may travel great distances to either side of the actual location of the trouble. Disturbances of this kind are often very difficult to trace and, to cope with them successfully, special apparatus is required.

Elimination Procedure

To eliminate interfering electrical impulses, use is made of condensers, choke coils, or a combination of both. A unit of this kind is called a "filter." The assembly of a filter unit is a simple matter and in some cases its installation is by no means difficult. Caution, however, should be exercised when connecting such a device to a power circuit. Be certain that the installation is made in compliance with the rules of the Board of Fire Underwriters. Fire hazards are to be avoided in all cases.

Figs. 4 to 9 are schematic diagrams showing various filter circuits.

Exact specifications of the capacities of the condensers, or inductances of the choke coils, are not shown in these diagrams; because they vary under different conditions.

In many cases where filters are to be installed to eliminate interference, a certain amount of study of the particular situation will be required. One of the hook-ups shown should be employed. It may be necessary to substitute various values of capacity and inductance before the correct combination is found which will most effectively produce the desired results.

The filter condensers in any of the filter circuits shown should be capable of withstanding a 1000-volt (direct-current) test if they are to be connected across a 110- or 220-volt supply line.

The choke coils must be wound with the proper size and length of wire and mounted on a core of suitable dimensions to give the *reactance* desired. Also, the wire must safely carry the current flowing in the circuit in which the coils are connected. Another consideration is that the choke unit should not appreciably reduce the voltage required at the main machine.

Although "cure-all" rules cannot be given relative to condenser and choke-coil values, we cite a few of the more commonly used sizes.

Figure 10 shows a vacuum cleaner utilizing a small "universal" type motor. A small condenser rated at 0.5-mf. capacity is connected across the motor input terminals.

Figure 11 illustrates a washing machine motor, the circuit being equipped with a filter unit wired according to Fig. 8. Condensers rated between 0.5-and 1.0-mf. capacity are used in this filter; while the choke coils (having an inductance of at least 1.5 millihenries) are wound with about 100 to 150 turns of insulated copper wire on a 2½-inch form. The size of the wire depends upon the value of the current drawn by the motor.

It is possible that the filters shown in Figs. 4, 5 and 7 may eliminate interference set up by such motors. The capacities of the condensers and the construction of the choke coils in these circuits are approximately the same as in the similar units just described for Fig. 8.

Thermostatic Circuit Controls

The electrical heating pad, shown in Fig. 12, has a thermostatic unit producing the interference; for its details in a simplified form, see Fig. 13 at A, B, C.

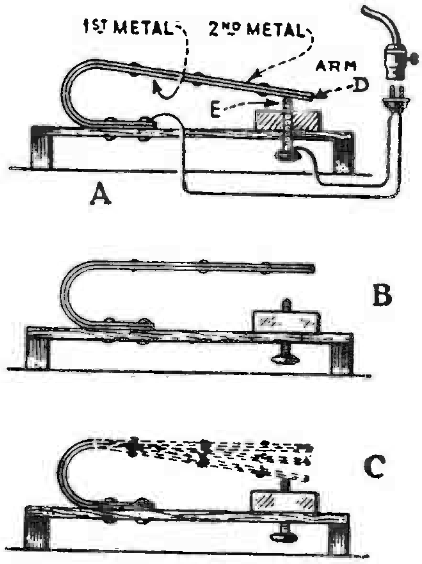

Fig. 13

The alternate heating and cooling of a thermostatic contact may set up rapid vibrations which cause very troublesome interference.

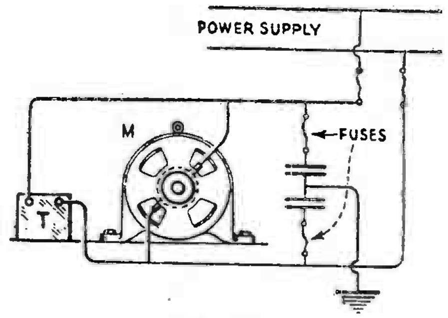

Fig. 16

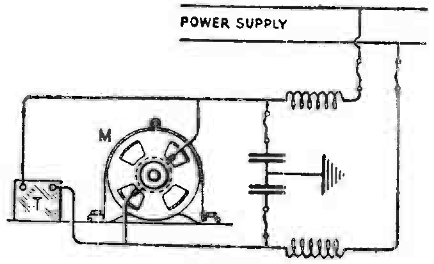

Fig. 17

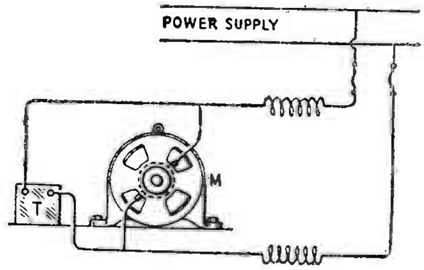

Fig. 18

The high-voltage ignition of an oil-burner is almost an ideal transmitter. It will be necessary to experiment with the types of filter shown to determine which gives most effective relief.

Heating pads require the use of thermostatic current controls which are made up of two dissimilar metals, with different *coefficients of expansion*. During operation one of the metals expands more rapidly than the other and therefore, when a certain heat is reached, the rapid expansion of the metal forces the contacts apart, thus breaking the circuit as shown at B. When the arm "D" cools sufficiently it drops back on contact "E" as shown at "A" and current again flows through the thermostatic alloy. Because of certain conditions, arm "D" may open just far enough at times so that a small movement will set it in rapid vibration; causing the circuit to make and break several times in succession as shown at "C," and each time an arc will be drawn at the contacts. It is this action of the thermostat that causes interference from heating pads.

Fig. 12 shows a 1.0-mf. condenser connected across the line and as close as possible to the point where the connection wires come from the pad.

Signs that Broadcast

As a rule, the control mechanisms of electric signs are enclosed in a metal housing which is grounded to carry off any interfering waves caused by sparking when the *motor-driven commutator* makes and breaks the current supplied to the lamps.

Another type which depends upon thermostatic control is shown in Fig. 14. In this case the metal "M" is heated by a coil "C" which by expanding closes the contacts at "D," thus allowing sufficient current flow to light the lamps in the sign. Once the contact is made at "D," the coil "C" is short-circuited. The short-circuiting of coil "C" allows the bar "M" to cool; it then contracts, breaking the contact at "D," and opening the circuit to the lamps.

The condensers required in this filter range in capacity from 1.0- to 3.0-mf.; while each choke coil should consist of at least 250 turns of insulated wire wound on a form 3 inches in diameter. The wire must be of the proper size to carry, without overheating, the current drawn by the lamps in the sign. In certain types of signs, filter units employing *two* choke coils, like those shown in Fig. 8, may be required.

To reduce interference it is not always necessary to use condensers. Only choke coils are shown in Fig. 18; in which a filter unit of the type shown in Fig. 6 is used.

Motors and Ignition Systems

Dental motors often cause interference in radio sets located several hundred feet from the actual place where the motors and dental equipment are installed. In such cases one of the filter units shown in Figs. 5, 7 or 8 will usually clear the trouble. The rating of the filter condensers in Fig. 5 should be at least 1.0-mf.; in Figs. 7 and 8, approximately 0.5-mf. capacity. The choke coils should consist of 80 or 100 turns of No. 14 D.C.C. copper wire, lump-wound on a 2-inch form. This means that the turns may be placed on the core without regard to any particular arrangement, as when a coil is single-layer or bank-wound. A typical dental installation is shown in Fig. 15. The filter used here is shown also in Fig. 8.

The electrical equipment of automatic coil burners often causes interference, when in operation; but, since different oil burners may not respond to the same treatment in order to eliminate radio interference, specific remedies cannot be given. A few general methods of procedure, however, are available; as shown in Figs. 16, 17 and 18. In each of the diagrams the transformer T is of the high-tension type, developing a potential in the neighborhood of 10,000 volts across its secondary. This high voltage is used to ignite the vaporized oil as it is

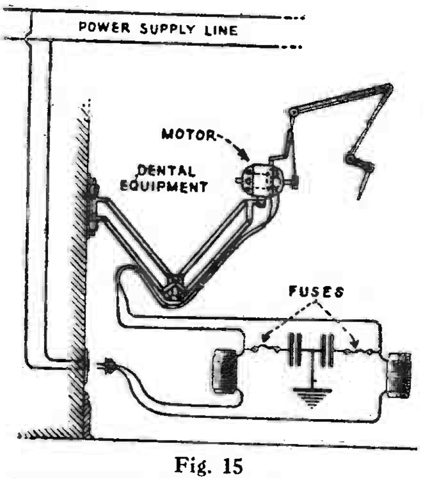

Fig. 15

A dental motor, of a type which can be very annoying, is shown with a filter of the type of Fig. 8. The chokes may be home-made.

driven into the furnace. In these filters the condensers should be from 0.5- to 2.0-mf.; while the choke coils should consist of about 150 turns of No. 16 D.C.C. copper wire wound on a 2-inch form to provide sufficient inductance. The coils may be lump-wound.

X-ray Equipment

In practically all instances X-ray equipment produces considerable radio interference which may be sufficient either to blot out the broadcast signals entirely, or at least cause interference which is very annoying when dealing with equipment of this kind. The service man should try out all of the various types of filters until one is found that will materially reduce the interference. It is not to be expected that all of the interference from machines of this type can be eliminated, even after applying any filter combination; because *a great proportion of the trouble is due to energy radiated by the long high-tension leads* leading from the apparatus to the electrodes. Shielding these leads is not practical, because it would interfere with their free use. The best method is to shield the entire room containing the equipment with a fine copper mesh (an expensive undertaking). X-ray equipment employing a rectifier of the rotary synchronous type is very troublesome in the matter of setting up interference.

Motion-Picture Equipment

A motor-generator, such as are employed to furnish power to the arcs of a motion-picture projector, often causes interference in receivers at distances of 300 yards or more. A simple filter of the type shown in Fig. 5 will in most cases improve conditions; the capacity of each condenser should be at least 2.0-mf. The filter unit is connected across the generator output, as shown in Fig. 19, with 5-ampere fuses included as indicated in order to protect the generator in the event of a short-circuit or breaking down of either condenser. The filter unit should be enclosed in a metal box.

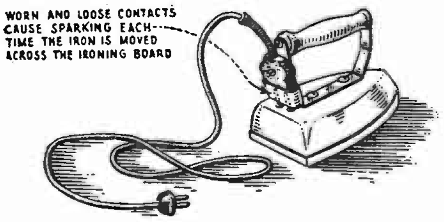

Fig. 21

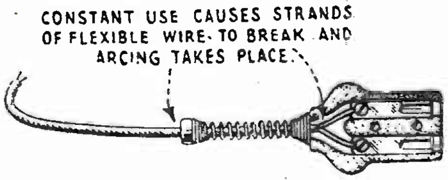

Fig. 22

Even an electric iron in use may cause trouble—because of some imperfect contact made by its cord.

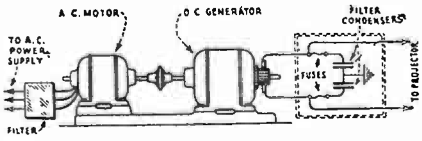

Fig. 19

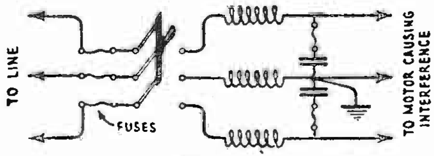

Fig. 20

The motor-generator combination will require a filter on each side, as shown above. The three-wire system is grounded in the center, but even here a choke coil may be helpful.

The filter shown in Fig. 9, which is called a "compound choke," has often proven successful in eliminating interference when all other combinations have failed. Usually, however, it will be necessary to employ a filter of this type only in extreme conditions. The correct values for the fixed condensers are determined by the degree of interference.

Figure 20 shows a filter connected in a "three-wire" system. The wire used in the choke coils must be large enough to carry the current drawn from the line without heating the coils. The condenser values in this unit vary from 0.5 to 2.0-mf.; and it should be fused with 5-ampere fuses.

Figs. 21 and 22 show how some electric irons may be sources of interference, due to sparking when the iron is moved across an ironing board. The remedy in such cases is to repair the defects either by installing new parts, or by making good soldered splices, as the case may be.

Power Lines

Lines carrying high-potential currents are always a possible source of interference. The radio service man should never attempt to work around or touch any part of high-tension power system, or traction lines, even though interference trouble is suspected at these points. The very first reason is that the slightest carelessness on any one's part may result in loss of life; for some power lines carry hundreds of thousands of volts and are extremely dangerous.

It is to be remembered that transmission and traction lines of this kind are private property; and persons not officially connected with the companies operating them are not permitted to tamper with or repair defective apparatus. Power and traction companies are always willing to cooperate with outside interests in running down the sources of trouble and effecting the necessary repairs. When radio reception is interrupted by some defect in power or traction systems, a complaint should be presented to the proper officials, who are always glad to know of such defects as they often mean a loss of power (and therefore money) to the company.

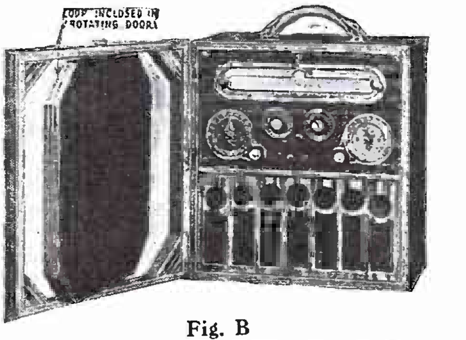

Fig. B

The portable superheterodyne shown is excellently adapted to the work of tracing "man-made static" to its sources, because of its directional qualities.

TROUBLES rising from the normal operation of domestic and other electrical appliances were considered last month. We shall close this series with a brief consideration of the troubles arising from power-distribution systems.

A few of the sources of inductive interference caused by trolley, elevated, and subway traction lines are: Sparking commutators; trolley and rail contacts; sparking of motors driving the air compressors on the cars; sparking at the contactors of the controllers; faulty line insulators; and poor rail bonding. A longer list could be written; but this is sufficient to indicate some of the possible sources.

It is often found that disturbances from any one of the above causes may create little or no interference close to their source; but *the high-frequency currents generated in such cases travel by means of the rails or power lines* and thus may cause interference in locations at considerable distances from the source rather than locally. In some localities, trolley and feeder wires often run parallel with telephone, telegraph, or light wires; and the high-frequency im-

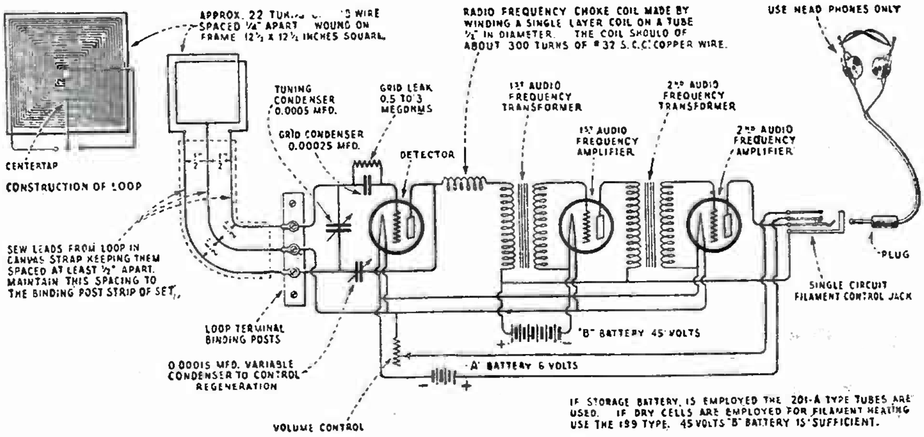

Fig. 25

The schematic circuit shown above is that of a loop-operated regenerative receiver, well adapted to the location of interference. The constants are given in the sketch. Such a receiver should be completely shielded; it may be constructed very compactly and lightly for the work described.

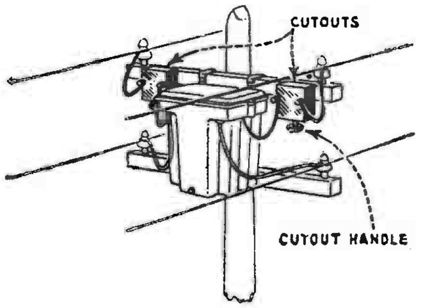

Fig. 23

"Static" noises may be caused by imperfect contacts within a power transformer, usually at the points indicated.

pulses originating in these lines are transferred by induction to the other lines paralleling them. In this way, the interference which started in one line may extend for great distances in other lines. It is conditions of this kind that make radio interference sometimes a "will-o'-the-wisp" and almost impossible to trace to its source.

Instances have been known where interference has been set up from spark discharges occurring through the oil film between the shaft and bearings of rotary converters. This trouble was overcome either by insulating the base, or by making an electrical connection between the base and the shaft through a wiping contact. Examples of this kind are interesting because they serve to show unlikely places that may be sources of radio interference.

Street Lighting

Defective lamp sockets, grounds caused by the power-supply lines coming into contact with the branches of trees, especially in wet weather, and loose splices, are all causes of radio interference.

A loose primary cut-out on a transformer will often cause trouble. Fig. 23 shows the general position of the cut-out in an actual installation. If a good tight contact is not made at the cut-out, slight vibrations of the pole will cause minute interruptions in the current supply, and result in surges being radiated to great distances either side of the defective unit. All wire lines parallel or close to the line, in which the faulty part is connected, will pick up this disturbance by induction and propagate it for miles.

If arcing occurs between a transformer case and the primary leads of a high-potential line, it will produce a harsh buzzing sound from the loud speaker. This noise often becomes so loud that broadcast reception is blotted out for hours.

High-Potential Systems

High-voltage transmission lines contribute to radio interference problems, chiefly because of leaky condensers, and also because of heavy surges of current set up by some faulty unit. This disturbing energy is transferred by induction to other parallel systems, causing interference perhaps twenty miles from the source.

A "horn-gap lightning arrester," of the type shown in Fig. 24, will discharge during snow and sleet storms; thus causing heavy clicking and snapping which can be heard in the reproducer.

From this discussion it should be apparent that the elimination of radio interference caused by power and traction lines is to be undertaken only by men qualified and equipped to work on these systems.

Location of Trouble

We now come to the work of definitely locating the source of radio interference. In this work the assistance of broadcast listeners is often of great help in quickly locating the trouble.

For example, owners of sets who are experiencing excessive interference are often requested by the power companies in their locality to keep a log of (a) the time the interference begins; (b) its characteristic sound; (c) the time it ceases, and; (d) whether it comes in with certain regularity, or only now and again. Information of this nature is very helpful in making a preliminary study of the situation before actual field work is begun. In a measure, it aids the men seeking the trouble; for it enables them to determine whether they will have to attack the problem from the standpoint of a fixed source, from which the interference is being propagated, or consider it one caused by transient phenomena.

After a study of the trouble has been made and it has been definitely determined that the interference is originating outside of the building where the broadcast receiver is installed, the trouble should be traced down with the aid of an automobile and a portable loop receiver of good design.

An open car is to be preferred for this work; since the large amount of metal in a closed car body acts as a shield and "distorts" the graph "pattern" of the signal or interfering noises.

An Interference-Pickup Radio Set

Fig. 25 showed a schematic diagram of a regenerative receiver suitable for tracing interference. The circuit consists of a loop antenna, a regenerative detector, and two stages of audio-frequency amplification. Regeneration and oscillation are controlled by a .00015-mf. variable condenser.

There is nothing mysterious about this circuit. It is just a standard regenerative receiver using, instead of the common "three-circuit tuner," a "loop aerial" which combines in its design the action of an aerial, a primary, a tuned secondary, and a tickler winding.

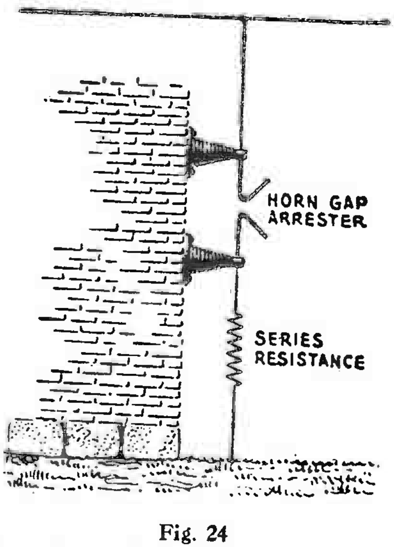

Fig. 24

The resistor in series between the horn-gap arrester and ground damps the natural oscillation of the circuit and reduces interference caused by atmospheric sparking across the gap.

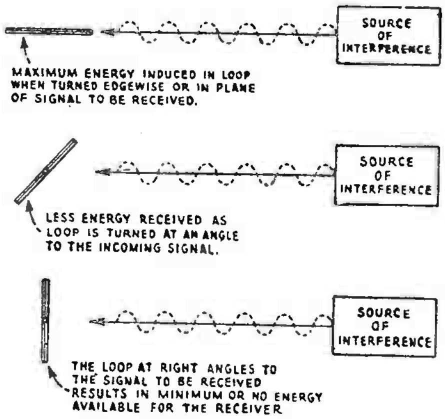

Fig. 26

While the loop, as shown, indicates the direction of the conductor which acts as an aerial radiating "strays," the apparatus originating the trouble is often a long ways from the apparent "source."

The loop described possesses "directional characteristics"; that is, it will receive the greatest amount of signal energy when it points either toward or away from the source of the interfering signal. This idea is illustrated in Fig. 26.

When used in a large city, the loop may show limited directional characteristics because of the network of power, lighting, and traction feed wires resulting in deceptive indications. For this reason the location of interference is not accomplished by employing the directional characteristics of the loop, (as used on ships), but by what is termed the "intensity of signal" method.

Use of the "directional characteristic" of a loop is not generally accepted as the best method for locating interference; because the loop will point to the *nearest conductor* which is carrying the disturbance, even though the actual source may be located miles away.

How to Use the Set

Starting from the building where the complaint is received, place the receiver in operation. Insert the headphone plug (which automatically lights the filaments of the tubes). Set the loop parallel with overhead power or lighting lines. Adjust the tuning controls for maximum intensity (which may at times seem to be of equal intensity for any adjustments of the controls). Now reduce the volume control until the signal is barely audible and, without changing the position of the loop, proceed for a short distance along the line which is suspected of radiating the interference. Take another reading; but this time reduce the volume if possible, in order to determine whether the source of interference is nearer. This procedure is continued until the volume control is reduced to its minimum setting. At this point the source of the trouble is usually found.

If the location seems to indicate that the trouble is on a particular pole, it should be shaken lightly in order to cause any loose wires or devices attached to it to vibrate. In this way poor connections will make themselves known by spasmodic and irregular sounds in the headphones.

More About "Man Made Static"

MUCH has been said about electrical apparatus that interferes with radio reception, about methods of location, the kind of set to use in this work, and all that—but still there is that puzzling case that makes you scratch your head and wonder what it is all about. Perhaps some of these ideas will help you.

We all agree that the noise travels back on the electric line, much in the manner of "wired radio"; and that the way to look for it is to keep the loop parallel and directly under the line, then reduce the volume and try—first in one direction and then the other—until the loudest spot is found. This is usually a pole. If it is secondary distribution that you are working on, the trouble is probably in some one's home. There are two things that you can do in this case. Either walk under the "services" (lighting lead-ins to houses) one at a time, and pick the loudest; or ask everyone connected to that pole what they are using and, if it sounds suspicious, have them shut it off to prove your case.

In this day and age of powerful and sensitive receivers, interference seems to be on the increase. A check of the electric light companies' records shows that about 65% of the trouble located is in consumer's appliances; while tne owners of these do not seem to realize the importance of applying filters, and usually make the statement that they use the appliances only for a few minutes.

But consider a number of these appliances used at alternate intervals, and we have a chain of interference that will last for hours.

Radio has a peculiar place in the electrical industry, due to its rapid growth in the last ten years. It has grown to a giant ranking next to the automobile, and we have only "scratched the surface." Too much time has been spent selling radio and not enough spent in making a place in which to use it.

We are now facing the problem of working over and filtering all our old equipment (which is, otherwise, operating normally) to make the world, speaking from a radio standpoint, a better place in which to live.

Some noises which can be heard on the electric sets can not be heard on the trouble shooter's set, even under the house "service"; that is, interference which is not a major noise, that would spoil reception entirely, can be heard on a sensitive A.C.-operated set when a station is tuned in. It creates a background roar and spoils the tone quality. The reason for this is that the electric set is more closely coupled to the line than the portable; and a careful inspection of the electric lines in the vicinity will soon get you on the right track. It can readily be seen from Fig. 1 that interference set up in one secondary line will in turn set up an interference in a parallel line; the intensity of the transfer depending on the length of exposure. The noise will be weaker, to be sure; but nevertheless it is there and can be found if looked for in the proper manner.

Troubles in House Wiring

We all know that any arc or spark causes radio interference, and we can no longer tolerate loose connections. An easy way to find troubles from this source in house wiring is to turn on the radio set at full volume, shake all fixtures and pound all the wall switches, listening for cracks and pops that you will no doubt hear. Many of the older houses throughout the country were once piped for gas lights and, in some cases, combination gas and electric fixtures are still in use. Others have the pipes capped off under the new light and fixtures. Here is a place for a lot of trouble. In an installation of this kind it is very seldom that the fixture is free from grounds. (See Fig. 2.)

When lightning strikes in the vicinity of the electric line, the induced current usually runs into the house and jumps off at the most likely spot—the gas-pipe ground—and the result is damaged insulation. If it is on the live side a fuse goes out; but, if it is on the ground side of the line, nothing happens until the fuse (X) goes out. Then the fun begins. The current flow is now from X to the transformer ground in the alley and, because contact is poor in the fixture, an arc is the result. Several cases of this kind were found where a loud buzz was set up with the set turned on only about sixty ~~watts~~. The greater the load, the louder the buzz.

It seems to be a habit with the electricians, when they cannot find a ground in the wiring, to reverse the circuit; thus putting the grounded wire on the neutral or ground side of the electric line. This is all right where there are no neutral fuses but, if there happens to be one and it blows, then the noise starts. Therefore, if in doubt as to the origin of the noise look at the neutral fuse.

In a fixture of the type shown in Fig. 2, where the wire is woven through the chain, a static charge is set up in this chain and, as long as everything is quiet, there is no trouble. But walk across the floor, or otherwise move or jar the chain, and a crackling or popping noise will be set up. The cure here is to tape the eyelet (Z) and thus insulate the chain from the canopy.

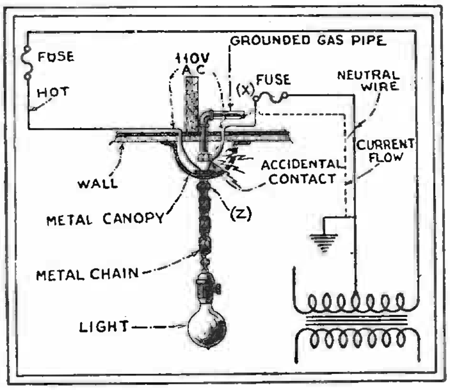

Fig. 2

One side of an A.C. line is grounded; if a fuse in this line blows, a ground in the wiring will cause all kinds of radio disturbance.

Another spot in house wiring that will bear watching is the entrance switch at the meter; here is a likely place for loose connections. (Fig. 3). All places marked X are likely places and, if the meter switch and fuse box happen to be located near a door, the vibration due to constant opening and closing of the door will loosen all screws and fuses. These loose connections can be found by the method used above.

Even the lowly electric lamp comes in for its share of the blame. Investigation of one complaint showed that the noise was coming from a neighbor's home; but only a 100-watt lamp was turned on that time. Turning it off stopped the noise, and it was found that the lamp filament had parted and was holding an arc that did not go out until the lamp was turned off.

Troubles in Receivers

One day we received a complaint of a humming noise which came in at one spot on the dial. During the course of the evening it would move from place to place. Upon investigation it was found that a neighbor was using a superheterodyne he had built from a kit. By a mistake in wiring, the antenna was coupled to the oscillator, and it would radiate at double the frequency the set was tuned to.

The heater-type tube causes a number of complaints, for it sometimes emits noises that imitate most any interference. All are caused by a static discharge from heater to cathode. Many sets are found with defective power packs. Small arcs in the condensers, due to loose connections or high-resistance short circuits, cause many of the unusual growls heard in the listener's sets. Also some voltage-divider resistance units have a broken wire caused either by corrosion or by breakage due to contraction or expansion. This will show up only when the set gets good and warm; and many other complaints of this type, that appear after the set has been for use for hours, will account for the large number of cases found clear at the time of inspection.

Fig. 1

The high-voltage lines, which in some systems are used for "wired wireless" distributors, also carry unwanted R.F. noises from one house line to another, sometimes a long ways off—as from No. 1 to No. 3 here.

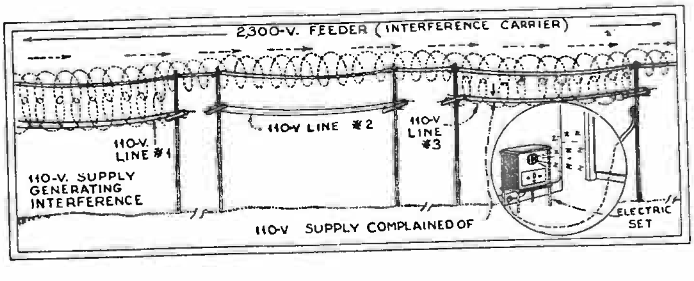

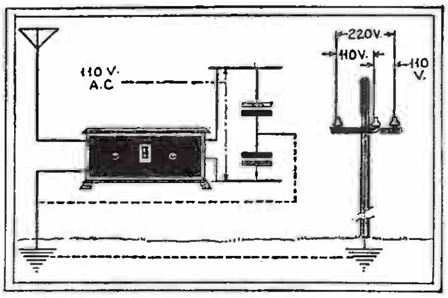

Fig. 4

A bad ground furnishes a coupling for line noises, even though there is a filter in the input of the set. The reason may be easily seen above.

Strict attention should be paid to the ground wire and its connections. When it is connected to the antenna post trouble starts. With such a connection, the light line acts as an antenna and, since interference travels on the line, we can readily see what will happen. In districts where street cars are used or direct-current lines exist such connection makes the noise about 30% louder.

It always pays to put up a good antenna.

Loose connections in ground wires always cause trouble; because any number of electric receivers use by-pass condensers on the line side of the power transformer. Since even a small condenser will pass alternating current, and since the electric company's lines have a grounded center or neutral wire, a small arc will result at the point of poor connection. (Fig. 4.)

Another condition that will produce a loud hum is a lamp sitting on top of the set over the detector tube or cord stuffed inside the set too near the tube.

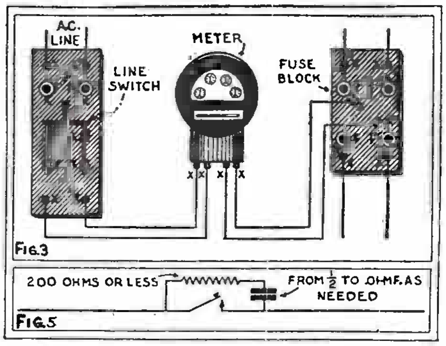

Fig.3

Fig.5

Above, we may see how many opportunities for a loose contact cre afforded in a meter installation: Count the Xs. Below, a filter for telegraph interference.

Key click from telegraph offices sometimes causes severe interference in the form of a loud popping or thumping noise and, when other lines parallel the circuit, it will spread over a large area. This is not so hard to find, but the cure may be a little harder. Use a ½-mf. condenser with about 200 ohms in series across the key. The resistance should be variable, and different sizes of condensers may be tried until the noise is stopped and the key does not arc too much at the contact. (Fig. 5.)

One piece of electrical apparatus emits a noise that sounds like the ticking of a clock; it is licensed under the Abrams patents and used for electrical treatments. The same filter will apply to this.

The trouble shooter's life is not all roses. He is usually a much cussed and discussed man and, if every owner of an interfering device would apply a filter, it would save him many a gray hair and many a cold ride.

Curing Station Interference

THERE is no doubt that many of you have experienced a lot of interference which you attributed unwittingly to lack of selectivity, or to condensers out of alignment, or to high-resistance circuits, or what not. At any rate, let it be known at the start that there are several other sources of interference.

One other kind is what we may call "set pick-up," since we have no better name for it. This is merely the effect of the energy of the passing radio wave on the wiring of the set; and it can generally be identified by simply pulling the first R.F. tube out of the socket. After you do this, if you still hear the signals, it is clear that what you heard has been "picked up" by the wiring of the set. The obvious cure for this is to completely shield the whole receiver. Since this is generally being done nowadays, this cause of interference is rapidly passing into the limbo of forgotten things; except under the worst conditions, where the receiver is located near or "under the eaves" of the broadcaster.

Interference which results from power-line pick-up is also gradually disappearing, with the introduction of buffer condensers, R.F. chokes in the power lines, grounding condensers, and what not.

But the kind of interference we are going to discuss in this article is more difficult to handle than those which we have mentioned. Its cause is the same principle that permits us to use an electron tube as a detector, or rectifier, of radio-frequency signals: we refer to the rectifying properties of the tubes.

Effect of Untuned Coupling

This form of interference is known as "cross-modulation:" it is the same kind of modulation that we have in the detector tube—or should we call it de-modulation? It is both, as we shall see. And we call it *cross*-modulation to distinguish it from the useful forms of modulation which we require in both transmitting and receiving.

Remember the untuned or "aperiodic" couplings we used to use in the antenna circuit? These consisted merely of a choke coil, or an auto-transformer, or even a simple resistor, placed between the grid and cathode of the first R.F. tube; the grid end of the coupler being connected to the aerial, and the cathode end connected to the ground. (These arrangements are shown in Fig. 1.) Let us see what is likely to happen, and what actually does happen, when the signals are strong, and when the R.F. amplification is very great, as it is nowadays.

All signals in the vicinity of the antenna are impressed simultaneously on the input of the first R.F. tube, for the antenna circuit is untuned, and is supposed to be an acceptor circuit for all signals. Of course, the strength of the signal voltage reaching the first grid depends upon the frequency-characteristic of the coupling device, but this is generally a pretty good one.

Let us suppose that we usually tune in WEAF (660 kilocycles) at 80 on the dial, and WGCP (1250 kilocycles) at 20 on the dial. Then we find that, by turning our dial to about 95, we can hear both of these stations together. What is happening?

The same thing that happens in a superheterodyne: the two stations "beat" together. One beat-frequency, the sum of the two, is outside the tuning range of our receiver, and so does not cause us any trouble; but the other—the difference-frequency, or 590 kilocycles (1250—660=590), is just within the upper limit of our tuning range.

Now, the mere presence of the two signals upon the input of the first tube would cause us no trouble if this tube did not act as a rectifier and permit one signal to modulate the other, thus producing the beat-frequency in its plate circuit. The tube acts this way because its plate current-grid voltage characteristic curve is not exactly straight, but has a slight curvature, even when we operate well up on the curve.

So, in the plate circuit of the first tube, we have current of a frequency different from the frequencies of the signals, and which is within the tuning range of our variable condensers. This exotic frequency is then amplified by the R.F. amplifier in the usual manner; and we therefore hear both stations simultaneously at a point on the dial where we shouldn't hear them.

We can pick out dozens of combinations of stations which will produce this effect. All that is necessary is that either the difference or the sum of the two frequencies should lie within the tuning range of the receiver. There is one short interval in the whole tuning range in which no beat-frequencies can be obtained. This is near the middle of the range, from about 950 to 1060 kilocycles.

Use of Push-Pull Input

The obvious way of curing this form of cross-modulation is to tune the antenna coupling; but it may be of advantage, sometimes, to keep the antenna untuned. In this connection it is worth while to note that we can make the acceptance-characteristic of the coupling device almost anything we want; and so boost up the gain on the

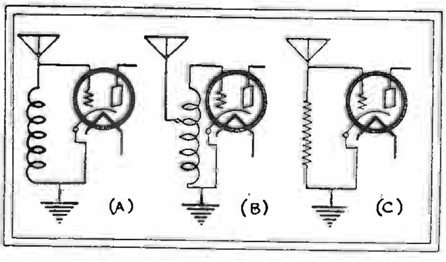

Fig. 1

Three typical "untuned" antenna couplers, which accept all R.F. frequencies, used to eliminate a panel control and produce a single-dial set.

long waves, where we often need it so badly. In any event, it is possible for us to retain the untuned circuit and eliminate the cross-modulation, by using a push-pull circuit as the first radio-frequency amplifier stage. Such a circuit is shown in Fig. 2.

There are several things to notice in this diagram. In the first place two of the coils must be wound in opposite directions, in order to place signal voltages of opposite polarity on the two grids; this is necessary in all push-pull stages. In the second place, because the two tubes are so closely coupled together, it is almost impossible to prevent them from oscillating unless a neutralizing scheme is used. The two capacities (C1 and C2), connected cross-wise between the tubes, are the neutralizing condensers. A very strong modulation signal, to which the set is tuned, can be made to disappear completely by adjusting the neutralizing condensers until the circuits are correctly balanced.

The fact, that this form of modulation can be corrected by using a push-pull circuit, indicates that it is due to curvature of the grid-plate characteristic curve.

Screen-Grid Problems

Another form of cross-modulation occurs when tubes are operated at such voltages that grid current flows. Many people have called this condition "overloading"; it was not overloading in the most serious case we have had to contend with lately. Most screen-grid tubes have such characteristics that grid current flows—even when there is no signal at all—when the grid voltage is made less than about 1.5 volts negative.

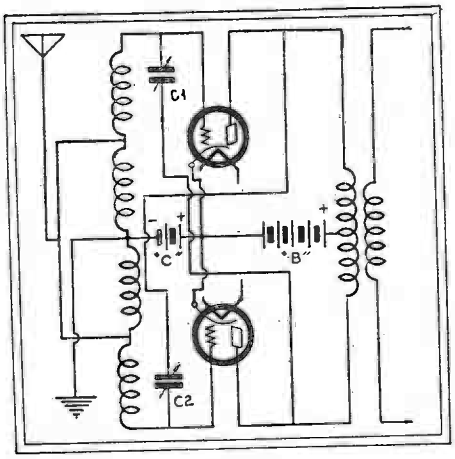

Fig. 2

This untuned push-pull R.F. input is designed to eliminate cross modulation; it must be neutralized, as with the condensers C1 and C2, to prevent oscillation.

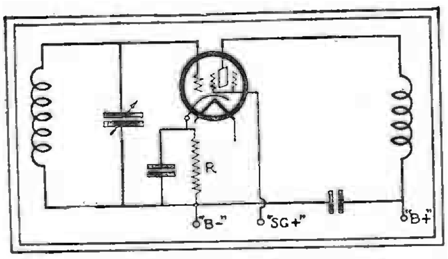

Fig. 3

In the usual grid-biasing arrangement, the bias falls off as the plate current decreases, until the grid draws current.

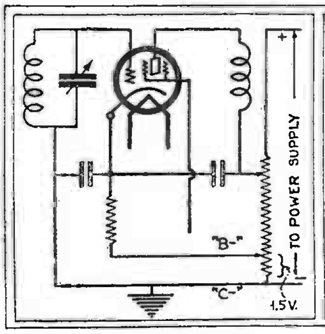

Fig. 4

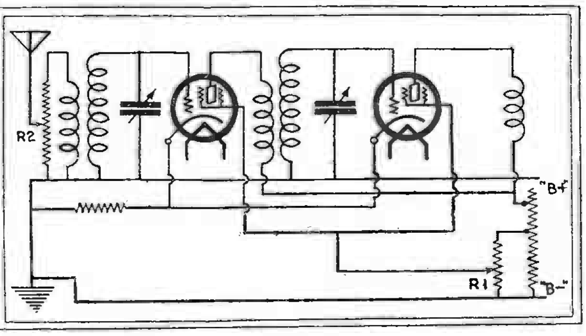

Fig. 5

The connection at the left keeps the grid bias much steadier than that of Fig. 3. At the right, dual volume control. When R1 and R2 are operated together, distortion is minimized.

Under such conditions, when the signal comes on, even though it has a voltage considerably less than the bias, it produces a variation in this grid current (just the same thing that happens in our grid-leak grid-condenser detector) and the signal is rectified.

Now, suppose we have two signals applied to the grid of the first screen-grid tube, while grid current is flowing; the one signal will then modulate the other and, when we tune to either of them, we will hear the intermingled programs of both stations. In this case we tune, not to the beat frequency, but to one or the other of the interfering signals. This phenomenon occurs when we have two strong signals fairly close together in frequency.

Furthermore, it generally occurs on reduced volume. As you are aware, it is customary to obtain the biasing voltage for the grids of screen-grid R.F. amplifier tubes by placing a resistor in the cathode circuits, and connecting the grid return below this resistance. (The arrangement is shown in Fig. 3.) The plate current of the tube flows through this resistor R, and the voltage drop in it creates the grid bias. Now, when the volume is controlled by reducing the voltage of the screen, the plate current decreases—and, consequently, the bias decreases. So, when we reduce volume on a strong signal and thereby reduce the bias, we soon come to a point when the grid begins to take current, and the modulating process begins.

Maintaining Grid Bias

The obvious methods of curing this are twofold; the first is, of course, to make the input of the first tube so selective that only one signal can get to the grid at any one time. There is, however, a limit to this, which is found in the impairment of quality due to side-band cutting when we use the simple tuned circuits. Here is an obvious use for the "pre-selector" band-pass circuit.

The other obvious cure is to prevent the grid bias from getting so low that grid current can flow in the circuit; this can easily be done by adopting the arrangement (Fig. 4) in which the grid-return or ground is connected to the voltage divider of the power pack at a point 1.5 volts below that where the cathode circuit is connected. Then, even when the cathode current (or plate current) of the tube is as low as zero in value, the grid will be still 1.5 volts negative with respect to the cathode; and no grid current can flow.

There is one objection to this method however; because it is often necessary, when receiving very strong local signals, to reduce the screen voltage so far (in order to make the listening comfortable) that the plate current is reduced to perhaps 30 microamperes or less. This means that we are operating near the "cut-off" of plate current, which is obviously a bad thing in amplifiers; since it permits only the stronger bursts of signal voltage to get through, and the quality suffers considerably thereby.

The set designer, therefore has had to resort to other expedients in order to overcome these troubles. A practical answer has been found in the use of two volume controls. One of these is the usual potentiometer (R1 in Fig. 5) which controls the screen voltage. The other is the potentiometer (R2) connected across the primary of the first R.F. transformer (*i.e.*, in the antenna circuit and forming a well-known form of volume control.

Both these controls are operated simultaneously by a single shaft. On reducing volume, therefore, by the time the screen voltage has been so reduced that grid current begins to flow, or we approach the cut-off of plate current, the volume control at the antenna has simultaneously diminished the signal. In other words, by the time we approach a condition where the signal begins to suffer, the signal is no more.

A HUM KILLER

MANY A.C. sets hum, even though the filter system is quite efficient. I have found that, in sets using push-pull audio stages, a 100,000-ohm resistor R1 connected across the secondary of the input transformer will reduce the hum considerably. In extreme cases, another 100,000-ohm resistor R2 may be connected across the secondary of the first audio transformer. This second resistor may make a very slight change in the volume; but it will certainly kill whatever hum may be left.

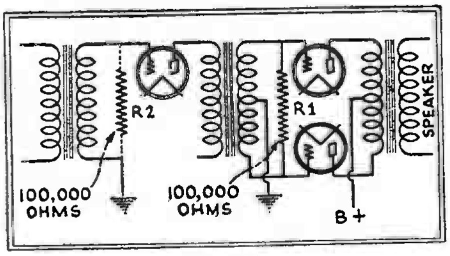

Fig. 2

Service Men find the use of these resistors a solution of the persistent hum problem.

Eliminating Interference in Airplane Radio

THE keynote of effective radio-telephone communication between planes in flight and ground stations is the proper silencing (electrically) of the ignition, engine, and moving metal parts in the airplane, as the communication engineers discovered when they set about to develop an aircraft radio-phone installation for the San Francisco-Oakland-Chicago and San Diego-Seattle mail-passenger airways operated by the Boeing companies.

Proper shielding and bonding of the airplane presents the greatest difficulty in the installation of the equipment so that effective operation is possible. Because of the necessarily low powers of the transmitters on the ground, the receivers on the plane must be unusually sensitive to obtain reliable communication. The gain of the receivers must be of the order of 120 decibels; and therefore the interference problem is indeed serious by reason of the enormous gain.

It was found that the ignition system had to be covered with metal to lower disturbances to a point where they no longer interfered with the reception of voice signals. Standard shielding equipment either did not shield at the 5660- and 3142-kilocycle frequencies (52.97 and 95.42 meters) employed, or it did not have the necessary durability to stand up under the many hours of flight required from the air mail planes. Therefore it was necessary to evolve a harness which would eliminate effectively the interference from the ignition system.

Considering that high voltages (of the order of 15 to 18 kilovolts) are employed, the problem of shielding the spark plugs was difficult. After many weeks of experiment, a shielding was developed that would stand up mechanically, though light in weight, and would in no way affect the operation of the engine. The plug itself represents but a slight change from the regular spark plug commonly used by air transport operators; the difference is in the design of the jamb nut which holds the plug together. The nut is run up a little

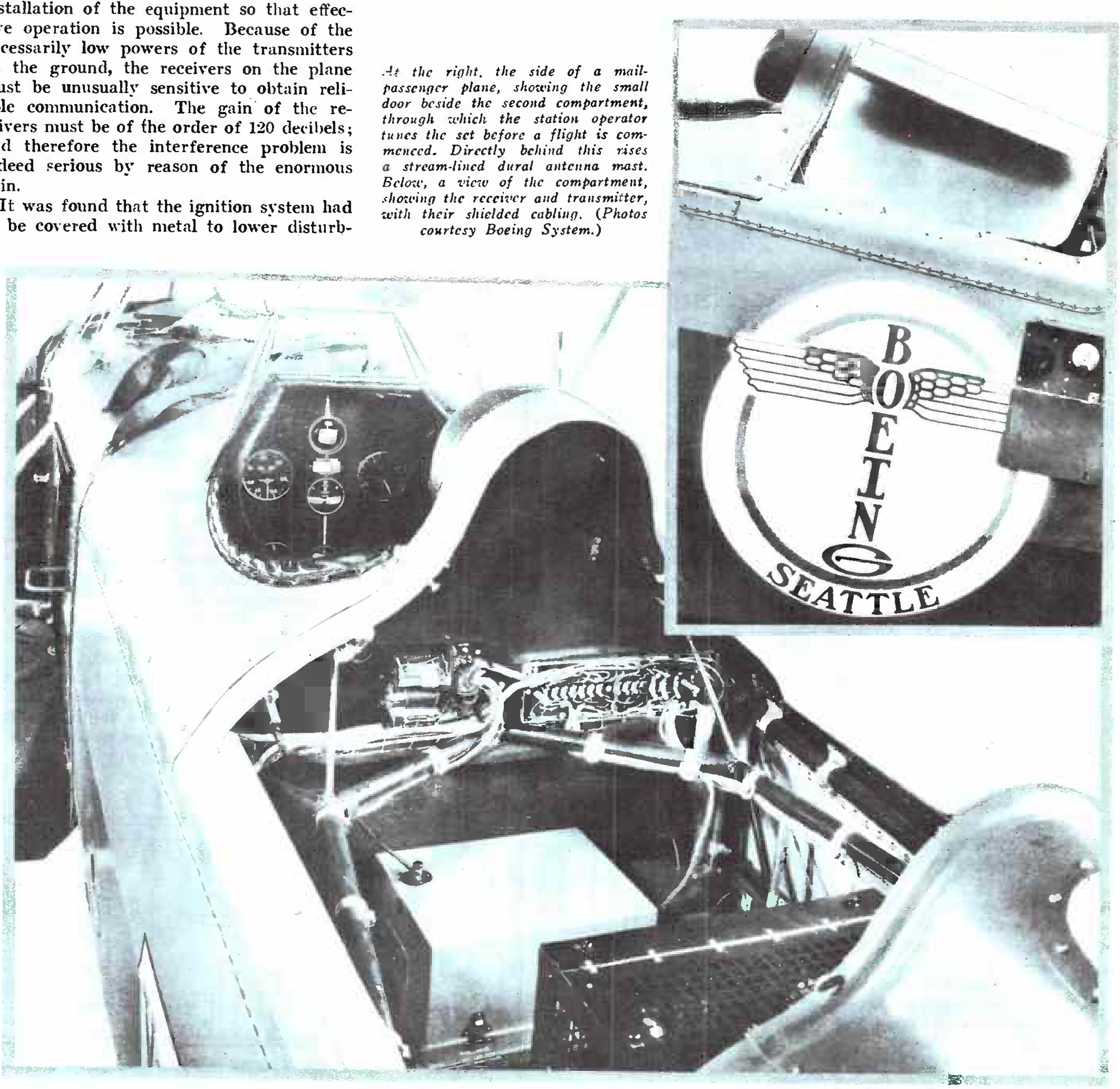

At the right, the side of a mail-passenger plane, showing the small door beside the second compartment, through which the station operator tunes the set before a flight is commenced. Directly behind this rises a stream-lined dural antenna mast. Below, a view of the compartment, showing the receiver and transmitter, with their shielded cabling. (Photos courtesy Boeing System.)

over one-half inch, forming a tubular sleeve with a groove at its base. The cap which fits over the plug is made of nickel steel; and the prongs, fitting down over the plug sleeve and clamping into the groove at the base, are tempered to hold the spring action imparted to them during manufacture.

This installation effectively shields the radiation of electrical energy and is sufficiently durable.

Shielding of the leads from the magnetos to the plugs was accomplished by combining woven copper braid with flexible carburetor hose, the braid being placed inside the hose. The braid in itself proved to be a very good electrical shield; but, after a few hours of service, oil would soak into the braid and insulate each strand from its neighbor, so that the effectiveness of the shielding was impaired. The flexible carburetor hose protects the braid from oil; so that the combination, as developed by the Boeing engineers, is effective.

The shielding of the magnetos is relatively simple and consists of two aluminum sheets, bolted to the magneto, and a band of spring bronze covering the gap between the plates. In front of the shield is a removable block with the outlet tube.

These three types of shields compose a complete covering of metal for the ignition system, suppressing the interference so that it is not audible in the receivers, with their enormous gain. On this shielding the effectiveness of radio-telephone aircraft operation depends.

Another great source of interference with the reception of voice signals was the emission of static electricity from the different parts of the airplane; every place where one piece of metal could rub against another proved to be a source of interference. Consequently, all joints had to be bypassed with a pigtail of copper braid, which was soldered to both of the moving parts. The standard turnbuckle was varied with the replacement of the usual brass safety wire by a strip of bronze, wired and soldered to the eye of the turnbuckle.

All wires in the plane are either shielded with the copper braid or else carried in conduit. The latter method is preferable, since it permits the replacement of wires with a minimum of labor and expense.

When the ship is equipped with a high-frequency transmitter, it is imperative that all the wires be completely covered with a grounded shield; as otherwise they will pick up the energy, and either burn out or absorb enough of the energy, already too small, which is radiated from the antenna system.

With the effective bonding and shielding of the airplane itself, the greatest difficulty encountered in the installation of the radio-telephone equipment was overcome.

The choice of an antenna system presented a considerable problem; the trailing-wire type is undesirable, since it offers considerable head resistance and, over the San Francisco-Chicago and San Diego-Seattle airways of the Boeing System, it is necessary at times to fly at altitudes so low that they preclude the possibility of a trailing-wire antenna.

Therefore a mast-type antenna was developed, consisting of a dural (light-metal alloy) stream-line shaft, projecting six feet into the air behind the pilot's cockpit.

Every traffic station along the two airways of Boeing System is equipped with the Teletype, or telegraph printer, which is a source of radio interference. Boeing System engineers found that they would have to develop some means of checking this interference to permit satisfactory operation of the radio-phone equipment.

They decided to equip the Teletype machines with a rotating squirrel-cage type of induction motor. This removed the cause of the radio interference, because the usual type of motor has five sparking contacts. The reliability of the printer was not impaired by this installation.

With the elimination of interference from the various forces detailed in this article, Boeing System engineers were able to insure effective transmission and reception of the voice signals exchanged between the twenty-two ground stations along its airways and the pilots of its fifty mail and passenger ships.

It is the belief of the Boeing communication engineers that the long-standing debate over the relative merits of voice versus code aircraft radio has been answered in favor of the voice radiophone by reason of interference elimination.

Popular Radio Accessories

In spite of many opportunities, the average Service Man does not avail himself of the possibilities of selling various radio accessories in the home.

The writer has carried a few items in his kit for the past year, all of which have proven very successful. It is a rare home, indeed, in which at least one of these accessories could not be sold.

Noise Reducer

The first of these accessories is a noise or static reducer. As seen from Fig. 2, it consists of a neon glow-lamp in series with a variable resistance. This device is connected across the voice-coil terminals of the loud-speaker. Its operation is relatively simple, it being a form of an automatic volume-control. First, the manual volume-control is set at some definite level. It will be necessary to mark this point on the dial, for successful operation of this device depends upon the correct position of this volume control. Then the variable resistance in the unit is adjusted till the lamp starts to flicker.

Therefore, if there are any extraneous noises such as static or electrical interference it will be shunted or bypassed through this device. There will not be any loud crackling such as previously present, but only a low-pitch noise or "plop" whenever there is a large amount of static. Whenever this occurs, the neon lamp will glow.

The parts used in this device are a G.E. 1-watt neon glow-lamp with a small Edison base, and a 10,000-ohm variable resistor. This unit is housed in a small container and sold to the customer for $2.50. After a free demonstration on a bad night, the customer will always buy this device.

Hum Eliminator

Many of the early type as well as some of the later model A.C. sets had a very bad hum. Different methods have been tried to combat this evil but only one device seems to be the panacea for all our hum troubles. This is an adaptation of the hum-bucking unit designed by Miessner and used by Loftin-White in their amplifier. Almost everybody knows what a success it has been in the above units. It is simple to construct and adjust. It promises an inviting field of revenue for the wide-awake Service Man.

As seen in Figs. 3 and 4, it consists of two 5-mf. condensers of 400-volt rating and a 5000-ohm variable resistor. When installed, it is only necessary to turn the arm of the resistance to a point where no hum is heard.

This hum-bucker has been used with success in such sets as the Majestic "70" and "90," Temple "8-80," Victor "RE-32" and RCA "16," "18," "33" and "60." It should be connected in the last radio-frequency stage.

Tone Control

In spite of the great popularity of dynamic speakers, many sets are still found employing the magnetic speaker. Very often the owner complains of insufficient bass and a superabundance of tones in the middle register. This situation can be remedied by the use of a device called the equalizer.

The constants for the trap for use with magnetic speakers are one .1-mf. condenser, one 80-mh. choke such as Samson, and a 0-50,000-ohm resistor. The resistor is adjusted until a pleasing response is obtained. The schematic is shown in Fig. 5.

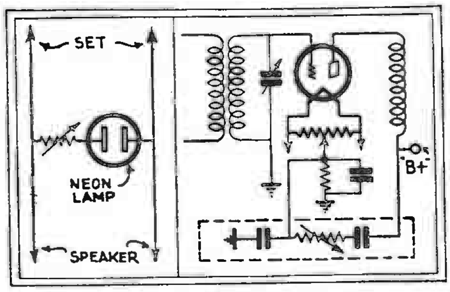

Fig. 2, left. *Circuit of the static reducer.*
Fig. 3, right. *Hum-control circuit.*

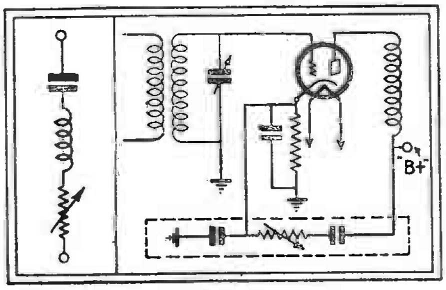

Fig. 4, right. *Another hum-control connection.*
Fig. 5, left. *Tone-control unit.*

Location and Reduction of Hum in Radio Receivers

THERE are a great many possible causes of hum in every electric receiver. Any engineer who has designed or assisted in the design of a set of this type will appreciate this fact; and it is surprising to the writer that more information has not been published on the subject.

A certain amount of hum, present in every electric set, is due to the tubes themselves; and the engineer who designs the set, of course, has no means of reducing this hum voltage. However, the use of heater-type tubes, in all stages except the last, has contributed much toward the elimination of this trouble; and it is hoped that in the future, tube design will be improved considerably, in the reduction of hum and also in the matters of length of life and efficiency.

The hum which is produced by induction, in electric receivers of present design, is an important item, and due mainly to the fact that standard design requires that the power supply unit be incorporated in the same chassis as the set. Yet, suppose we have a receiver with a separate power unit; in the installation, it is unwisely mounted in the top of a console cabinet with the power unit directly below it. The chances of a strong inductive pick-up from such an arrangement are much greater than in a correctly-designed set with the power unit enclosed.

Induction pick-ups may be divided into two general classes—magnetic and electrostatic. Since each requires a different mode of elimination, we will consider them separately.

Magnetic Induction

The leakage currents built up in the core of the power transformer (particularly if a single transformer is used for the filament, plate and grid supply) are undoubtedly the worst offenders in the matter of induction pick-up. The filter chokes must not be neglected; especially if an air-gap is employed to maintain a high inductance. (The average air-gap is equivalent to the thickness of a calling card.) Naturally, the first choke, carrying the greater percentage of A.C. component in the current, must be watched most carefully.

It is easily understood that the first audio transformer is the most susceptible target for magnetic leakage currents. (See Figs. 2 and 3). Any hum picked up at this point is amplified several hundred times, in a good audio amplifier; and a comparatively small hum voltage may be increased to tremendous proportions in the speaker.

By the first audio transformer, is meant, not only the transformer, but the associated wiring and—last but not least—the tube itself. This point is often neglected, even in some sets well designed in other respects. The electron stream in the tube is affected as readily by magnetic fields outside the tube envelope as by those within it; and a hum may be introduced from outside sources as well as by a field set up in the filament or cathode of the tube. This brings to mind an experience of the writer, some time ago, in designing a receiver. The dies for stamping the chassis were all made before it was discovered that a strong hum was introduced, under certain conditions, through the fact that the rectifier and detector tubes were only a few inches apart, although separated by a wall of aluminum (A, in Fig. 4.) It was necessary to enclose the detector tube completely, as at B, before the hum was finally eliminated.

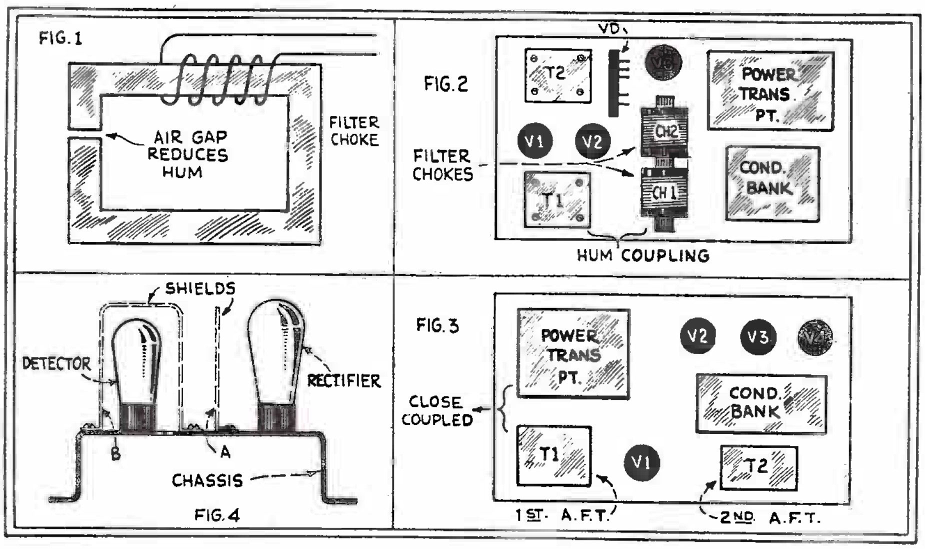

Causes of hum and places where it is likely to occur, are illustrated in the diagrams above. If the gap, shown in Fig. 1, has been shorted, hum occurs. In Fig. 2, interchange of T1 and T2 might reduce hum amplification; in Fig. 3, another cause of feedback is shown; while Fig. 4 shows ineffective shielding at A, remedied as at B.

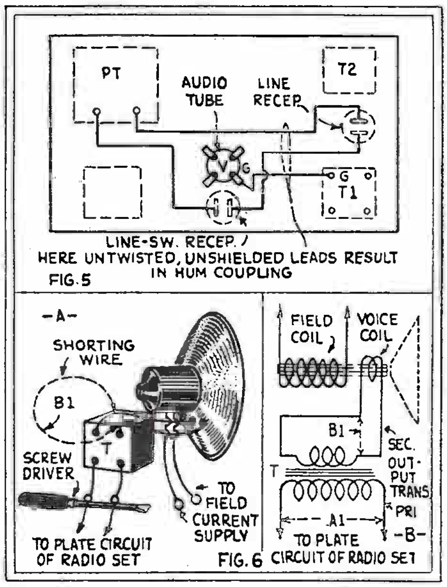

Above, we see a cause of hum, in the nearness of the power-tube's grid to an A.C. lead. Below, shorting tests, to determine the location of feedbacks.

High-quality amplifiers require very great care in shielding and isolation, to prevent magnetic pickups. A poor amplifier, with little or no amplification at frequencies below 150 or 200 cycles, is not nearly as critical in this respect; because of the poor amplification at the frequencies of the supply current and its first few harmonics.

Trouble with Dynamic Speakers

Another source of considerable trouble with inductive pickup is the dynamic type of speaker, used so universally in modern sets. The fact that the field winding of such a speaker is supplied with poorly filtered or unfiltered current is not serious in itself. This will cause a low hum, due to the induction in the voice coil or coupling transformer. The main trouble is caused by induction between the field winding and other circuits in the set; especially the detector or first audio circuits. When this occurs, the hum voltage becomes very annoying.

Also, the usual methods of reducing hum in these speakers are comparatively poor. The shading rings and hum-bucking coils have an efficiency seldom more than 50% and usually much lower; while the 2000-mf. condenser, so much trusted, does not reduce the hum more than 30%. These statements are based on actual tests made by the writer, as well as on several reliable authorities. There is a very definite field for improvement in the dynamic speaker when used with a separate power supply.

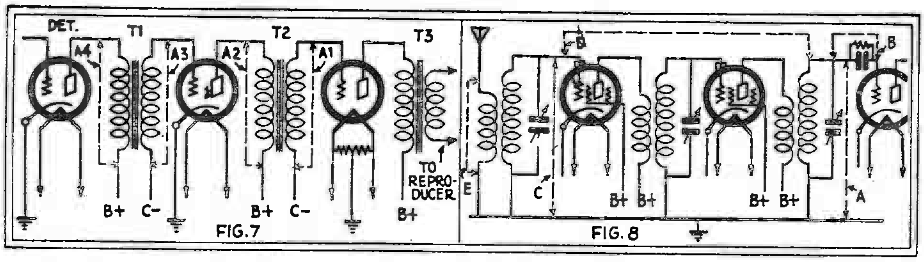

The shorting method of "hum-shooting" is carried back stage by stage, from speaker to aerial: at the left, the steps from output transformer to the detector; right, working from detector through R.F.

Electrostatic Pickups

Because the audio-frequency impedance between the grids and plates and the grounded circuits of a radio-frequency amplifier is very low, the electrostatic pickups are limited almost entirely to the detector and audio systems of a receiver.

Unlike magnetic pickups, the electrostatic pickup occurs mostly at the higher audio frequencies; because the degree of coupling commonly found in an amplifier favors those higher frequencies. Thus it is the higher harmonics of the supply current which are heard from an electrostatic coupling and, since these harmonics have a much lower voltage than the fundamental and the first few harmonics, the difficulties from this source of hum are comparatively small.

Any unshielded conductors carrying a high alternating potential (such as the leads from the power transformer to the rectifier tube, the leads from the rectifier to the first filter choke, and any 110-volt leads from the power line) are possible sources of such trouble (Fig. 5). As in the case of magnetic pickups, the detector and first audio circuits are the most susceptible; although others should not be entirely neglected.

With a set employing grid-current detection, the detector grid is an extremely susceptible point. However, with the general acceptance of plate-current detection, this trouble is not so prevalent in the later electric sets. One source of trouble in this respect is between the various filament windings of a power transformer, particularly if the detector grid is at a potential far removed from ground. Although the writer has not tried the following scheme, it is believed that an electrostatic shield of brass or copper placed between each pair of the filament windings and between the high-voltage winding and the primary and filament windings, would be a solution of this problem.

Types of Hum Tones

While the audible characteristics of the three general classes of hum (*i.e.*, magnetic induction, electrostatic induction and insufficient or incorrect filtering) cannot be described exactly, they are sufficiently individual so that, with a little experience, almost anyone can tell the differences.

The first (magnetic induction pickup) has a low tone, sometimes accompanied by a peculiar singing sound. In poorly-designed sets, which have little amplification on the very low tones, the singing noise may be all that is heard. This singing is the note of the higher harmonics of the 60-cycle frequency. As already explained, this type of hum is usually caused by magnetic coupling, between the power transformer or filter chokes and a circuit in the set. A very similar hum is heard when the filament potentiometers are incorrectly adjusted, or when the center tap of a transformer's filament winding is not at the true electrical center.

The second type (electrostatic induction), while not as common as the first, is more easily described. It is higher in tone than the magnetic type, and has been compared to the buzzing of a bee close to your ear. This buzzing hum is caused by electrostatic coupling between the rectifier or input leads and the detector or audio amplifier in the set. A similar noise is sometimes caused by a noisy detector tube; although these are not as common as they were some time ago.

The third type (poor filtering) is the sonorous steady 120-cycle hum, higher than the note for magnetic coupling, and without the singing sound which often accompanies the latter. This may be caused by insufficient filtering in the power unit, or incorrect by-passing in the circuits of the set; it is much more musical and resonant than the other two types.

Some Simple Tests

Many hum problems can be solved merely by listening to determine the type of audible note. However, some simple tests on the wiring of the set will disclose the source of the sound, regardless of its type; these are made with several pieces of wire, and no instruments are required. Later, some more thorough tests will be explained.

If the speaker, or the "output" transformer which couples it to the set, is short-circuited (Fig. 6), the hum which remains is due to the speaker itself; this may be caused by insufficient filtering of the current supplied to the field winding. Next, if the wire is connected across the secondary of the transformer between the first and second audio stages, in such a way that the "C" bias on the last tube or tubes is not disturbed, (A1, Fig. 7) the hum originating in the last stage will be added to that in the speaker; and comparison by ear will tell how much hum is originated in this amplifier circuit. If the first audio transformer's secondary is shorted in the same way (as at A3), the hum in the first audio stage will be added. (Shorts A2 and A4 also are convenient in locating hum.)

If the hum comes in class one of the above definition, the detector and its R.F. coil can be shorted in the same manner (see Fig. 8) to show the hum in the detector. Then, if the hum increases when this short-circuit is removed, the difference is due to the radio-frequency section of the set. In the latter case, the hum may be heard only when a station's carrier wave is tuned in. If grid detection is employed, and the grid leak is short-circuited, most of the electrostatic hum in the detector grid will be removed. (Hum voltages due to antenna pick-up disappear when a jumper is applied as at E.)

By localizing the hum in this way, the exact cause can be found quite readily. In using this system, it may be found that, with certain parts shorted out, the hum *increases* rather than decreases. This is due to what might be called a hum-feedback, which reduces the over-all hum voltage.

Complete Hum Analysis

While the above simple methods will often tell quickly just where the source of hum may be found, it is advisable, in some cases, to use measuring instruments to make a more detailed study of the various susceptible points of the set. The following tests are based on the use of a vacuum-tube voltmeter connected across the speaker's input leads.

If a speaker of the magnetic or inductive type, with a permanent magnet, is employed,

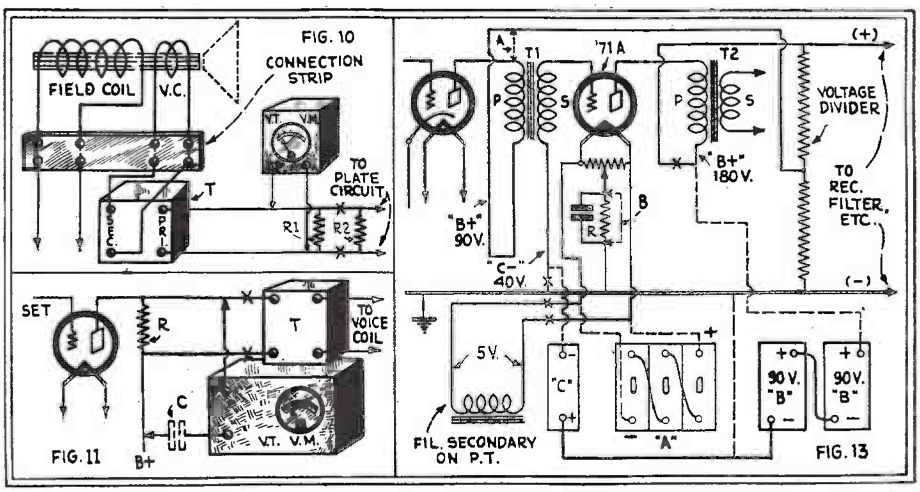

Upper left, measuring the hum voltage in the dynamic, with an output vacuum-tube volt meter; below, a similar test on the set's output. R must equal the impedance of the primary of T, which it replaces; C may be needed to keep the proper D.C. bias on the tube of the meter. At the right, batteries substituted for the power pack, to obtain hum-free current for testing.

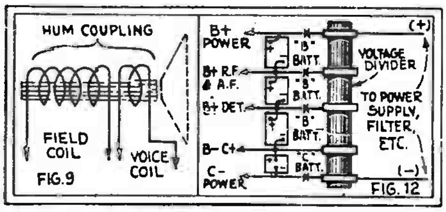

Left, the dynamic reproducer as a source of hum. Right, replacing the voltage divider by batteries, as a hum-proof current supply for testing.

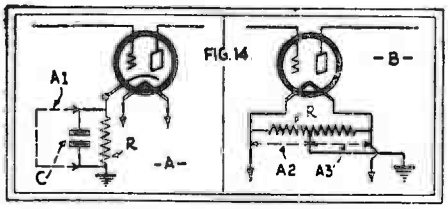

Left, a test for hum due to a faulty grid-biasing circuit; right, a similar test of the center-tapped filament circuit.

the speaker hum can be neglected. If, however, a dynamic speaker with an electromagnetic field is used, the hum due to the speaker must be accounted for. Such hum is due mainly to coupling between the field coil and the voice coil (Fig. 9) as mentioned before. In measuring hum of this type, the speaker's input transformer (T, Fig. 10) should be disconnected from the set, and a resistance R1, equal to the plate resistance of the output tube or tubes, should be substituted, in shunt with the measuring device (the vacuum-tube voltmeter V.T.V.M.)

The field winding should be supplied with the normal amount of current; to do so, in case the current is obtained from the "B" power unit of the set, a resistance R2 (equal to that of the primary of the speaker's coupling transformer) should be connected in the lead to the power tube or tubes. In this way, the current consumed by the set will remain normal.

If a power transformer, input transformer or any other source of a strong field is close to the speaker, it should be removed temporarily to a point far removed from the speaker; then returned individually to the former position and a comparison made.

When making further tests, if the speaker hums, it should be removed from the circuit, and a resistance, (R, in Fig. 11) equal to that of the primary of the transformer should be placed in the plate circuit of the power tube.

Substituting Various Units

In order to measure the hum produced by any one of the power supplies, the others should be replaced by batteries (Fig. 12). For example, if we wish to measure the hum produced by the "B" power unit, the 'C" biasing resistors and the filament transformer should be replaced by batteries of the same voltage and with sufficient current capacity. The hum is then measured in the plate circuit of the power tube.

The same system is used for the filament. The correct filament current can be obtained by placing a resistor in series with a 6-volt storage battery.

In the case of plate and grid voltages, the supply for the individual tube should be tested. As an example, we could measure the hum introduced by the "C" bias in the power tube's circuit by replacing the plate and filament supplies by batteries for the power tube alone; and then test each of the other stages in turn, thus comparing the increase on the hum for each addition. (This, however, cannot be done for the "C" bias test when the power unit is tapped for this bias; except as indicated in the figure.)

In measuring the hum introduced by induction, the power supply for the plate, grid and filament of the power tube should be replaced by batteries (Fig. 13); and the primary of the coupling transformer, between the first and second stages, should be short-circuited with a wire, A. The grid bias resistor R is to be shorted by a wire, B. The hum developed in this manner is then due to induction; and a speaker in the power tube's plate circuit will reveal to which type it belongs.

The same system may be used for the first stage; by replacing the power supply with batteries in this stage, shorting the primary of the first audio-frequency transformer, and comparing the hum with that measured for the power tubes. This system may be applied also to the detector.

To measure the hum introduced in the radio-frequency amplifier by modulation of the carrier wave, the detector and audio amplifier should be operated entirely from batteries, and a strong signal should be tuned in. Because of the possibility of the transmitter's having a carrier hum, the signal should be produced preferably by a battery-operated local oscillator or generator, and be about "10 microvolts per meter."

In all the above tests, whenever the power supply for a tube is removed from a power supply unit, a "dummy" load or resistor should be substituted, in order to keep the remaining currents at their correct values.

When the actual source of hum has been located, measures may be taken to remove or reduce it. In the case of magnetic coupling, for instance, the usual interaction is between the wiring in the detector or first audio circuit, and either the power transformer or the first filter choke. Shielding the grid leads will often help.

Rearrangement of the parts is sometimes necessary and, in extreme cases, special shielding of the offending part is essential. Ordinary sheet iron, while a good shield for electrostatic action, is not very good against magnetic fields. "Soft" iron and special transformer steel (such as silicon steel, Permalloy and Perminvar) are much more effective.

Electrostatic coupling may, usually, be prevented by shielding the offending high-voltage leads, and carefully grounding the shields. Rearrangement of the parts is sometimes essential; although the writer has found that shielding the tubes (especially the first audio) has a marked effect on this type of trouble.

Hum "at resonance" often may be eliminated by reversing the position of the line-plug in the receptacle, or by-passing to ground, through fixed condensers of 0.1- to 2-mf. capacity, one or both sides of the light-line.

The Service Man and the set constructor often may check the grid-bias resistors, their by-pass condensers, the hum-balancing resistors, and perhaps their by-pass condensers, for opens, shorts, and grounds, by carefully and quickly applying a short-circuit, as shown in Fig. 14.

The only satisfactory remedy for poor filtering is more efficient apparatus, or higher values of inductance and capacity at the correct points.

Unusual Interference Sources

IN A small Western city several interesting cases of radio interference have been discovered. In one instance a set owner complained that at certain times of the day it was impossible to use the radio because of the interference. The power company then traced the interference to the point where the noise was loudest; this led them to a cable entering the local telephone company's office. At the time of the test, none of the electrical machinery of the plant was in operation and the main switch was open so that all lines were dead. It was almost certain, therefore, that the source of interference was not in the building. To make sure, however, a test was made. When the test equipment was placed on top of the generator, only a faint noise was heard; while on the floor right next to the machine no noise whatever was audible. Upon further investigation, it was found that the particular cable in question contained a wire leading to a switch in the office, from which a police light on the main street was operated as a courtesy to the city. When this switch was opened, the noise completely died out. It was evident, then, that some high-frequency current was being picked up and carried along the wire to a point near the aerial leading to the receiving set of the complaining set owner.

The city, upon being told that the police light was causing interference in nearby radios, decided to discontinue the operation of the light rather than go to the trouble and cost of locating the interference source.

This means of radiation is known as "copper coupling" and exists when a high-frequency current is set up in a copper circuit and carried directly by the copper to a point near the receiving antenna. It is particularly hard to locate; since the point at which the maximum of noise is picked up by the test is not necessarily the actual source of the interference.

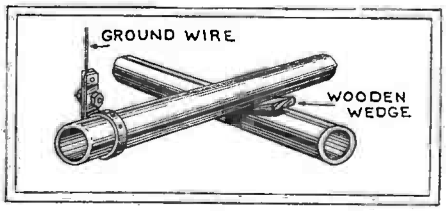

The vibration of these pipes, changing antenna constants, was easily stopped!

Hum Elimination in Tube Circuits

THE greatest problem in any radio circuit using A.C. tubes is that of hum and other extraneous noises. While in theory the heated cathode or '27 type tube is said to isolate the A.C. hum and line noises from the delicate radio circuits, this unfortunately does not hold strictly true in actual practice. In fact, more and more background noises have been experienced recently, due to the simple reason that present-day sets are capable of reproducing a far greater range of frequencies than the former sets, and therefore reach down the frequency response scale to the vicinity of the 60-cycle hum. The earlier A.C. sets, on the other hand, with a very poor low frequency response, were quite unaffected by A.C. hum. and the heater tube therefore was considered just about perfect. In addition to A.C. hum, there is being experienced a certain crackling noise, in many instances attributed to static but in reality due to causes within the heater tubes themselves. These causes would not be recognized as such, under any but exceptional testing conditions.

Sources of Interference

Of course there are many potential sources of noise in any A.C. set. First of all, it is well to remember that there are outside sources of noise which do influence the A.C. set more readily than the battery-operated set, due to the unavoidable coupling between receiver and power line. Thus leaky transformers, sparking motors, oil burner ignition systems, washers and other devices set up radio-frequency interference along the power line, which is apt to be picked up by any receiver, particularly when operated by socket power. Again, certain conditions within the receiver itself yet outside the tubes, such as faulty resistors, a poor volume control, loose connections, dirty contacts and other causes may lead to noises. Serious hum may be introduced by an unbalanced filament circuit, in the absence of an adjustable center tap for the grid return. Yet all in all, the greatest source of noises in any A.C. set may generally be traced to the tubes themselves, and particularly to the heater type which has been considered noiseless.

The Interference Checker

With a view to determining the cause of A.C. hum in the heated cathode type of tube, the DeForest Engineering Department recently conducted an investigation. The first step was to produce a well-shielded amplifier, operating on direct current supplied by the usual "A," "B" and "C" batteries. The best grade audio transformers were employed, in order to pass about the same proportion of 60-cycle hum as the average good receiver of today. The general arrangement of the test amplifier is shown in the accompanying diagram. The usual bypass condensers are used, although not shown for the sake of clarity. It will be noted that two stages of audio amplification, with transformer coupling, are employed, together with the A.C. heater tube under test. The potential between cathode sleeve and heater may be adjusted for any voltage. The output circuit includes a coupling condenser, high resistance, rectifier and microammeter (for taking comparative readings); and head-phones (for determining whether the meter reading represents hum or crackle, or both).

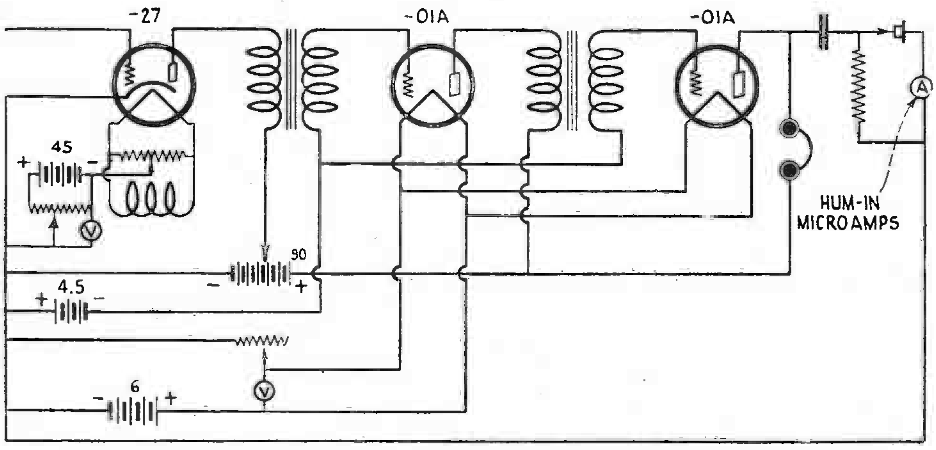

Circuit of tube hum and noise tester. Grid leak and condenser connect '27 grid and cathode.

Having arranged this test amplifier, the DeForest engineers next made up various types of heater tubes, following the standard designs now in production by tube manufacturers. A '26 or A.C. filament tube was tested in the amplifier, and gave a noise reading of 36, as a basis of comparison. The heater type tubes were then tested and a characteristic curve plotted for the degree of hum and crackle while varying the cathode heater bias.

Causes of A. C. Tube Noises

The noisiest tubes were found to be those with an insulator tubing of greater length than the cathode sleeve. The readings for these tubes were found to be quite erratic, with some samples fairly quiet and others very noisy, even when made precisely alike. A closer examination revealed the fact that the cathode sleeving was higher on some insulator tubings than on others, and those with the highest cathode sleeving were the most quiet. This led to important conclusions. The De Forest engineers deduced from these observations that the heater wire must be shielded by the cathode sleeving for practically its full length, and particularly at the top, for otherwise the inductive field of the heater wire affects the plate and induces a hum in the delicate plate circuit. Also, the crackle is believed to be a charge accumulating on the exposed insulator tubing and subsequently discharging to the cathode sleeve, particularly since the heated ceramic may become somewhat of a conductor at the high working heats.

Following the foregoing observations and deductions, tubes with cathode sleeving the full length of the insulator tubing were made up and tested. These proved remarkably quiet; in fact, they average one-tenth the hum of the usual exposed insulator tubes, and do away with the crackle. Also, due to the more efficient distribution of the heat from the heater, the heating time is reduced to about 10 seconds as against 20 to 30 seconds required by the average insulator type heater tube.

Undesirable Antenna Effects Produced by Lamp

NO doubt, every radio man is interested in the reduction of interference, man-made static, etc., encountered in the operation of receivers of the very sensitive types in use today; and has had, or will have, some unusual experiences along this line.

Some time ago, the writer came up against a case of this nature in his own demonstration room. Having set up a "Silver" receiver in a particularly nice corner, I proceeded to garnish the top with a small sign easel and a medium-sized antique lamp belonging to Friend Wife, and so left it.

After using the receiver several hours I became aware of the fact that a very fine imitation of static could be produced by tapping the side of the cabinet or walking across the floor. Of course I immediately rechecked the tubes and the receiver, and found everything O.K. It was then found that this noise could not be produced with the aerial disconnected (this receiver uses a small screen aerial fastened to the inside of cabinet top).

To make a long story short, I soon found that the antique lamp (being made of brass in two sections) had considerable *capacitative coupling with the aerial in the cabinet;* and poor connections, due to tarnish (*oxidization*) between the upper and lower sections of the lamp, had produced the "static" effects

I now use only a basket of paper flowers for decoration; and, in my journeys through my city, I wonder how many of the nicely-jointed aerials and lead-ins I see are static machines?

Moral: make it all of one wire and play safe.

To avoid "seeing stars" always discharge the condensers in the power unit with an insulated screw driver; unless the condenser is of the electrolytic type, when it is desirable to discharge it at a slower rate.

Last week, I heard a young fellow—who doesn't know a grid from a stove bolt—calmly assert that from now on he isn't going to service battery receivers any more; only All-Electrics for him, because there isn't so much danger of burning out the tubes when he works on them.

AN EFFECTIVE INTERFERENCE ELIMINATOR

MOST service men are familiar with the use of a choke coil for the suppression of artificial "static" radiations. However, it is generally believed that a successful unit must be purchased. The construction and application of the unit pictured in these columns will explode that fallacy.

In practically every instance of interference from motors it is usual to apply a palliative *at the point where the motor line connects to the power line.* This materially reduces interference *conduction* into the light lines; but, *it does not prevent interference radiation from the current lead between socket and motor.*

The design of this device is based on the fact that all motors of any real size have "fused switches" close to them.

To install this *air-core* choke (Fig. 1A), a fuse is removed from this switch box, the choke inserted, and the fuse screwed into the choke. The opposite side of the line is tried; one in each side may be necessary—in extreme cases.

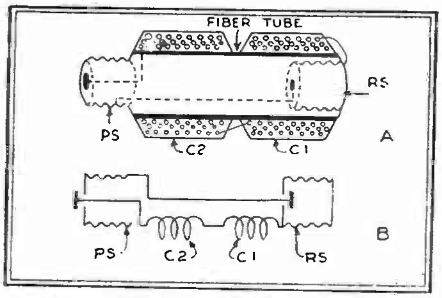

Fig. 1.
"Skeleton" and schematic circuit of the radio-frequency choke coil illustrated at the left.

Fig. 1B illustrates the series circuit so formed. This is schematically indicated in Fig. 2A (the fuse box without the choke); and in Fig. 2, below (the unit in use).

A brass shell is arranged in one end of a fiber tube, as shown in Fig. 1A. This is the receptacle shell, R.S. for the fuse. In the opposite end is fastened the plug-in shell P.S. On the tube are two windings; each of which consists of 140 turns of No. 18 D.C.C. wire, plain layer-wound. They are spaced as shown to reduce self-capacity which would act as a high-frequency by-pass and nullify the reactive effect of the choke.

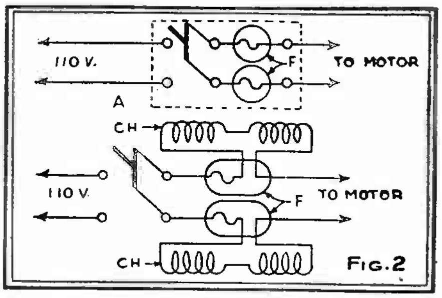

FIG. 2

Above is diagrammed the method of applying the radio-frequency choke coil

At left is pictured an effective "static" radiation reducer, for use on sparking devices, wired as described by the author. It is quickly and inexpensively constructed and easily applied; and will give relief from the "man-made static" generated by so many installations. The closer it is to the sparking device, the better.

ELIMINATING HUM FROM NEARBY LIGHT LINES

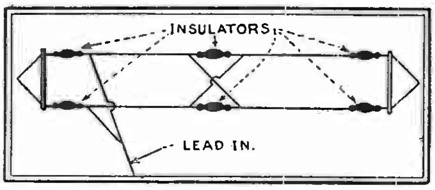

"Phasing" an antenna to reduce the effects of interference pick-up.

When your antenna must be placed parallel and close to high tension lines, a great deal of hum is picked up by it.

To eliminate the biggest proportion of this hum, put up a two-wire antenna, as shown in the drawing above.

The wires cross in the center of the span and they must not come in contact with each other.

REDUCING INTERFERENCE

A special call took me to a suburb, some miles away, to service a Victor set which had been delivered two weeks ago to a location which previous Service Men reported good. Despite their efforts, complaints flowed in, and the customer had stopped payments until the set should be properly serviced. As I knew my predecessors were good men, I had little hope of success.

The set was located in a two-story frame house on a hilltop, in a section where electric refrigerators and such sources of interference were seemingly scarce—*except* for a street-car barn some few blocks away. I questioned the owner as to the behavior of the set and, with her answer ringing in my ears, attempted to bring in local stations. Five minutes later I was convinced that the situation was hopeless; powerful local signals were mangled by an incessant frying, hissing, crashing and jangling noise. WTAM and WLW could be tuned in; but only by listening hard could a word or a few bars of music be distinguished above the noise. Yet the set was in perfect condition and the aerial and ground were no worse than others that brought in Cuba and Florida on the same model.

The car barn should not cause all the noise; because I had installed a Philco much closer to the barn, and the noise level was very much lower. Still, you never can tell. I connected a temporary aerial to the set and, by moving it in different directions, convinced myself that the aerial was not at fault.

I sat on the porch in the cold, smoking and meditating. My experiments had showed just one thing: the higher the aerial was raised, the greater the noise. An underground aerial would seem to be just the thing; but it was impossible, for various reasons, to install one here. As a last attempt, I decided that, if I couldn't put the aerial underground, I'd raise the ground to the aerial. It worked!

Here's how I did it: I took sixty feet of aerial wire from my kit, then thirty feet of No. 10 rubber-covered wire. One end of the latter was connected to the aerial binding post, and led through the window in the ordinary way. Over this I wrapped the aerial wire, spacing the turns about two inches apart. The other end of the aerial was then *grounded,* as the diagram (Fig. 1) will show, to a good ground. This resulted in a decrease of both signal and noise, without decreasing the ratio between them; when the volume control was advanced, we were back where we started. One end of the aerial wire must remain open, and one end of the rubber-covered wire must remain open; there is no conductive connection between them. The virtual schematic circuit is Fig. 2.

I have installed at least a score of such antennas since then; they will not always work. The best thing to do is to carry one already prepared, and experiment with it. The pick-up with an aerial of this type is greatest in the direction of the lead-in, thus reducing static from other directions (Fig. 2A). Its height may be anywhere from five to fifty feet above the ground.

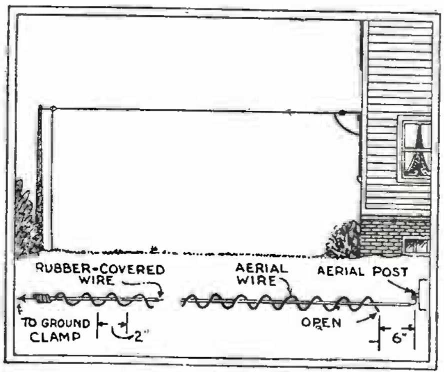

Fig. 1
One method of dealing with interference problems which will work in some locations. In some cases, the simpler method of grounding the far end of a long aerial will work.

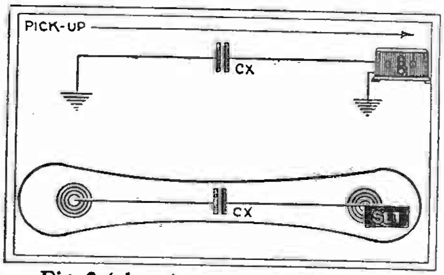

Fig. 2 (above) **Fig. 2A (below)**
The antenna illustrated in Fig. 1 amounts simply to a condenser between aerial and ground. It is highly directional in the line of its length.

Elimination of Inductive Interference

A Discussion of the Correction of "Noisy Reception" Troubles

THE problem of eliminating inductive interference is one that the Service Man is continually being called upon to solve. Inductive interference may arise from various causes, the remedies for which are not always practical; but, even if they are, the cost of such elimination may be prohibitive. In discussing this problem, let us first begin by defining "inductive interference" and then proceed to analyze its causes and, what is far more important, its elimination.

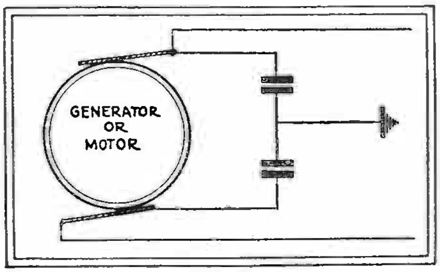

Fig. 1
The added capacity, shunting the inductance of the motor windings, raises the wave-length of the spark circuit out of the broadcast range.

Inductive interference may be defined as the extraneous "signal" which is induced into a radio receiver via the power supply, the antenna, or the set itself. Since the signal is from the outside, the problem is to eliminate this signal at as low a cost as possible. Interference of this type is experienced in close proximity to elevators, motors (both gasoline and electric), violet-ray or similar apparatus. In fact, any device that sparks is a probable source of high-frequency radiation.

If a coil and condenser are connected in parallel, and then across to two electrodes between which a spark is passing, high-frequency currents will circulate around the coil and condenser. This high-frequency current will be of the same frequency as the natural frequency of the coil and condenser and, furthermore, it will cause to be radiated out into space an electromagnetic wave which is of exactly the same nature as a broadcast station's signal. Now any D.C. motor, when operating, will spark at the brushes; and the line feeding the motor always contains distributed inductance and capacity. The result is that we now have a small transmitting set, which is capable of radiating energy out into space; it is this radiated energy which causes inductive interference.

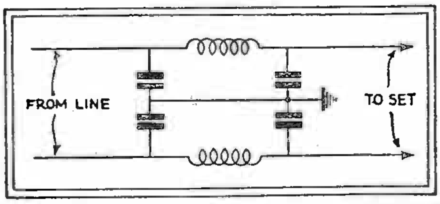

Fig. 2
The filter system shown by-passes R.F. currents picked up by the light-line, and prevents them from entering the set at the back door—the power unit.

The problem of the Service Man is to locate the particular piece of apparatus that is causing the interference. The proper procedure is to obtain a small portable receiving set, operated from a loop antenna. Then, by travelling about the locality in which the interference is experienced, it is possible to localize the source of interference. This location will be found when the intensity of the signal received by the portable receiver is a maximum.

It seems to the author that this conventional method is particularly inconvenient, since locations do exist where the Service Man is not allowed, or is physically unable to manipulate a portable receiver. The method usually followed is to inspect the premises visually and, from the nature of the equipment, place certain pieces of apparatus under suspicion.

Use of Interference Filters

When the source of the interference is localized, our next consideration is the elimination of the trouble. In the case of electric motors, large condensers of about ten microfarads capacity each should be connected from each brush of the motor (or generator) to ground as indicated in Fig. 1. Since the natural frequency of the circuit is now removed from the broadcast range, by the additional capacity of the condensers, the radiation will not be troublesome.

The Service Man should be sure that the frame of the machine is thoroughly grounded; this is highly important and special care should be exercised in obtaining a good ground, both for the frame and for the condensers. If necessary, several nearby grounds should be connected together and then to the equipment. This procedure has, in numerous cases, decreased the interference to a marked degree.

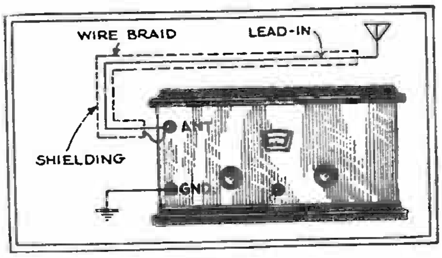

Fig. 3
An installation of this kind lessens pickup by the lead-in, and makes the antenna more directional

In cases of extreme radiation from the machine itself, it has been found necessary to enclose the machine entirely in a copper shield and then ground the shield. The cost of this method is usually large, and it is seldom resorted to in practice.

Elevators and gasoline engines present a somewhat more involved solution. In a gas engine, the spark-plug terminals connected to the ignition system form the oscillatory circuit; it has been found helpful to place resistors in series with the spark plugs to dampen out the oscillations. The resistance necessary depends upon the type of magneto, etc.; the proper value can easily be found by experiment. After the resistors have been inserted, condensers would be tried from each (or both sides) of the resistor to the frame of the engine, and the frame grounded; provided of course, the engine is stationary.

Interference from elevators arises in two places: (1) the motor; (2) the relays and automatic switches. The remedies for the motors are outlined above; but for the relays or switches, the problem is different. The type of interference obtained from switching arrangements is not a steady noise, but a click every time the switch opens. The author knows of no method that effectively eliminates all of the clicks due to the breaking of an inductive circuit; but a combination of condensers and resistors in series, connected across the terminals of the switch or relay has been found to reduce the clicking to an appreciable extent. No definite values of condensers or coils can be given.

Filtering at the Receiver

All of the above remedies are based on the assumption that the source of interference has been located. But suppose the source cannot be definitely located? The problem now is to reduce or eliminate the interference at the receiver proper. In this connection three conditions may arise:

(1) *With the antenna and ground disconnected, the interference persists and is just as loud as when they are connected.*

With modern shielded receivers the only possible path by which the interference can enter the receiver is via the power supply. If the interference is of a high-frequency nature, radio-frequency chokes (of about the same size as used in the receiver) should be placed in series with both leads of the line; and condensers from each side of each choke to ground, as shown in Fig. 2. This combination should be placed on the *set* side of the line-switch; or else the condensers will be placed across the line continually.

In one case experienced by the author it was necessary to enclose the entire line cable in a shield and then ground the shield. It should be pointed out that audio-frequency chokes must not be used; for the inductive reactance is sufficient to cause a prohibitively low voltage to be applied to the set. It is rare, indeed, that the interference is of an audio-frequency nature; so this case will not be considered.

(2) *The interference is zero with the antenna and ground disconnected, but persists when the ground alone is connected.*

This occurs more frequently than case 1 above and, fortunately, its solution is not very difficult nor expensive. In some receivers the decrease in volume with the ground lead disconnected is not sufficient to warrant its connection; in such cases, of course, the obvious solution is to leave the ground lead off.

Where the decrease is excessive, the remedy lies solely in locating a good noiseless ground; if this is impossible, a counterpoise may be constructed. The author has noticed that several Service Men attempted to place the ground lead in a shielded cable; but this usually resulted in an increase in noise.

(3) *The interference is zero with the antenna disconnected but at maximum when the antenna is connected.*

This condition is by far the most common experienced by the author. In several instances, it has been found that just as much noise was picked up with a wire five feet long for an antenna, as by a regulation antenna. For this condition the only practical remedy is to place the receiver as close as possible to the window through which the lead-in comes. It may well be that the entire antenna itself is picking up the interference. Tests conducted by the author indicated that the great majority of the noise was picked up by the lead-in, for two reasons: first, its close proximity to the building; and second, in the case of elevator interference, its being parallel to the elevator shaft. The horizontal portion of the antenna picked up very little of the noise.

An Anti-Interference Kink

A very novel idea devised by the author has been used to eliminate inductive interference of this type. The entire lead-in was enclosed by a tightly-drawn copper braid, which was in turn covered with an insulating and weatherproof material, such as rubber, tar, or wax. *This braid is not grounded,* and is run directly from the horizontal portion of the antenna to the antenna binding post of the receiver proper. The installation of this braid has in three cases of very serious interference produced a very marked reduction in the amount of noise received. If the braid were grounded, the high capacity existing between the lead-in wire and the ground would be sufficient to by-pass the desired signals. For this reason, the braid should be covered with an insulating material and, in order to prevent grounding during wet weather, the insulating material should also be weatherproof.

From a theoretical standpoint the operation of this lead-in is similar to that of a simple vertical, single-wire antenna. The waves, both noise and from the desired station, induce a voltage in this low-resistance braid. This voltage causes in the braid a flow of current which is 90 degrees out of phase with the induced voltage, and generates a magnetic field which opposes the fields due to the station and noise; with a consequent reduction of the strength of the fields in the vicinity of the lead-in. The lead-in wire, being inside the braid, has no voltage induced in it. The entire signal is then picked up by the horizontal portion of the antenna, which has a very directional characteristic which can be used to advantage.

The introduction of this shielded but ungrounded lead-in has reduced the interference caused by twenty-two elevators to practically zero.

One point should be clearly born in mind; and that is that the noise level itself has no significance. It is the *ratio* between signal and noise which determines the "quietness" of reception.

Receivers employing automatic volume controls present an interesting problem; if the signal is greater than the noise, the signal reduces the sensitivity of the receiver with a consequent reduction of noise level. If, on the other hand, the noise is greater than the signal (especially when tuning for weak stations) the noise reduces the sensitivity of the receiver, with a corresponding reduction of the strength of the weak signal.

A NEW SOURCE OF STATIC

WITHIN two days after we had installed a standard set, which tested perfect, the customer complained of noise, especially on low wavelengths. Our Service Man could not find it, on two visits; he tried removing the aerial, a line-filter, etc. On taking up the matter with the power company, we were asked to try out another set before they sent a man.

We sent over another set: the two were connected to the A.C. outlet and allowed to warm up. Switching the aerial from one to the other brought in noise with equal loudness on both. So we called in the company's interference man. He could find no noise until, towards afternoon, he located it in the same house where the set was. He tested every fixture, cut-out, etc.. in the house; and finally noted that the noise was present in his portable only when our set was turned on. So he cussed us all out, and went back to the office; and we gave the customer a new set and went back to the shop to locate the trouble.

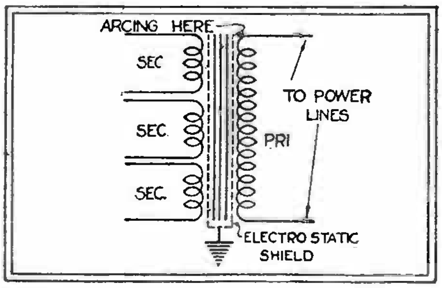

An electric set may originate disturbance in a 110-volt A.C. line, like any other appliance. One service organization had hard work before they tumbled to this fact.

The set played perfectly for some hours, without noise; and then noise gradually developed in it and every other set in the store when it was turned on. To make a long story short, after long search, it was located. in the power transformer. The primary winding had been arcing over to the electrostatic shield.

This did not occur until the transformer was thoroughly heated and, presumably, the position of the windings slightly changed.

AND NOW. WOMAN-MADE STATIC!

PARADOXICAL as it may seem, the increasingly colder weather reminds me of an unusual, yet comparatively simple, problem that my service partner encountered one cold, dry day last winter. The lady who telephoned the call to the shop said that she had received a shock every time she turned her radio set on. When the Service Man arrived at her home, he too, received a shock; and he removed the escutcheon plate expecting to find the "hot" side of the A. C. wiring to the snap-switch touching the metal. But it was not.

He received the shock, however, the first time *only* that he touched the metal front plate; and *none* afterward, as he handled the escutcheon, while removing it! He thought this to be curious, but nevertheless called the lady of the house and told her everything was O. K., that she would receive no more shocks. She came out of the kitchen, walked across the thick Persian rug which covered the floor, and let out a big whoop as she touched the escutcheon. However, in spite of the difficulties involved in explaining a phenomenal happening to a woman of foreign birth (or any woman, for that matter) he finally convinced her that her shuffling across the thick rug on a cold, dry day, had caused

ELIMINATING EXTERNAL NOISES

ONE day a lady called me from the neighboring town to come and see what was the matter with her radio. She said that it was subject to extensive noise interference.

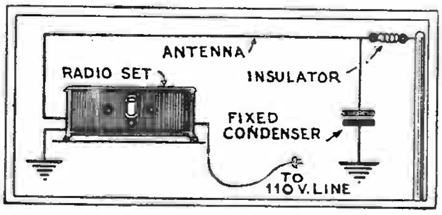

Another old idea in aerial installation which may solve baffling interference problems.

On arriving, I found that the set was a new Victor, less than a month old, and that it had always acted in that manner. The people wanted the radio, but would not keep it unless the noise could be eliminated.

I looked for the usual transformers on the light-line, and the favorite old stand-by, oil burners; I tried filters in the light-line, but they did not stop the noise. I tried changing the aerial and ground; that was useless. The set was all right, and I was sure the interference was farther away than a block or two. But what it was, I could not determine.

Then came a happy thought. I grounded the far end of the aerial, and the noise quieted down. I then put a fixed condenser in the ground wire, and the set worked perfectly. The loop thus formed was so large that little directional effect was noticed. In fact, some stations came in better than before.

CHAPTER IX

Automobile Radio

Thousands of Automobiles are now Equipped With Radio. The Various Types Now In Use Are Described From a Service Standpoint in This Chapter.

Servicing Automotive Radio

IN this section we will describe in detail some of the problems that arise during the course of installing and servicing automotive radio receivers. At the outset, it must be stated that the problems peculiar to one installation may require a method of solution radically different from that required of the same receiver in another type of car. These problems may be classified under three general headings:

(1) Mechanical difficulties;
(2) Electrical difficulties;
(3) Power unit.

The mechanical aspects of automotive receiver installation and service has been covered in the first chapter. As will be appreciated at this time, the method of installing a receiver in a car varies both with the type of car and type of receiver. In this connection, it might be stated that manufacturers of automotive receivers furnish complete data regarding the methods to be used in installing their particular set in a car. Templates are furnished which provide for the mounting of both the loud speaker unit and the chassis.

In most of the installations in use today, a remote control tuning unit is provided. This, as was stated previously, is mounted either on the dashboard so as to enable tuning by either the driver or a passenger, or on the shaft of the steering wheel, so as to enable tuning only by the driver. This latter method of mounting the tuning unit seems to be gaining preference, but here again, complete mounting details are furnished by the manufacturer of the receiver. One precaution should be taken—that is, to avoid any sharp bends or kinks in the remote control tuning cable. This latter precaution should be adhered to rigidly in all cases where remote control tuning units are used, regardless of who makes them or where they are placed.

It is also quite obvious that all nuts, bolts, etc., be tightened as much as possible during the installation or servicing, inasmuch as the receiver is subjected to much more vibration than is ordinarily encountered in radio work. All that is required, beside a knowledge of radio and automobiles, is a little common sense.

Electrical Difficulties

The number of different troubles which may arise in an automotive receiver are greater than in a set designed for home use. This is not so much due to the type of design as to the location in which the receiver is to be used. It might be well to emphasize at this time that all of the methods used to service home receivers are applicable to automobile types. In other words, if a tube goes bad in an automotive receiver, exactly the same methods are used to locate it as are used in ordinary service work. True, it is a little more inconvenient to approach the various parts of a set of an automotive receiver, but nevertheless the same methods of attack must be used. Space does not permit a detailed analysis of the methods used to service receivers designed for home consumption, but the reader is referred to other books and radio publications on this subject. We will only concern ourselves with the analysis of, and what is far more important, the methods of solving problems which are peculiar to automobile receivers alone.

In the first place, every gasoline operated car has what is known as an ignition system. This system is the cause of 75% of the complaints of owners of automotive receivers. In order for the Service Man to more fully appreciate the difficulties that arise in operating a receiver in a car, it perhaps would be instructive to enter into a detailed analysis of the ignition systems of cars, then show why this system causes troubles and finally indicate the procedure to follow in order to eliminate the above mentioned difficulties. Consider the diagram of Fig. 10. This is a very elementary sketch of a single cylinder in an automotive engine. As may be seen, it consists of an outer metal shell C inside of which is balanced a piston P. This inner chamber may be divided into two sections, A and B, section A being that above the piston and B that below the piston. Assume that the conditions are such that there is no gas in the cylinder itself and the piston P is just starting on a downward stroke. As it starts down, a mixture of gasoline and air enters the intake valve. When the piston reaches its lowest position, the intake vale is closed. The piston then travels up, compressing the mixture as it travels. In order to make the piston travel down, it is necessary to expand this gas. In expanding, it would push the piston down which in turn would cause the wheels of the car to rotate due to the action of

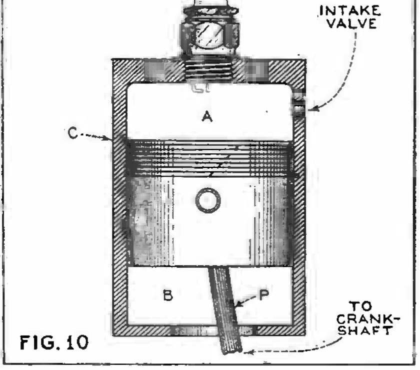

FIG. 10

Diagram showing the relative location of piston and spark plug.

the crank shaft, etc. Now the method used in the ordinary gasoline engine for expanding this gas is an electrical one. As may also be seen by reference to the figure, the cylinder has a spark plug inserted at the head (top of the cylinder). This spark plug has two terminals which connect to a source of very high voltage. Now in order for the greatest power to be obtained, the gas must expand when the piston is starting its downward motion. In other words, just as the piston starts to go down, a spark is caused to jump the gap between the two terminals of the spark plug. As this spark occurs, the mixture of gasoline and air ignites and then expands, pushing the piston downward as it does so. The piston then travels to the end of the stroke and upon rising pushes out the gas in the chamber A above the piston, this gas going out through the same (or other) valve. The piston then starts downward again and in so doing, gas again enters the chamber at A with a repetition of the preceeding steps.

Now, it is quite clear that the spark plug must fire at the precise moment when the piston is at its highest point, else maximum power from the engine cannot be realized. This means that there must be some device or devices which are capable of timing the instant at which this spark occurs. This timing is done by a device called a **distributor** which is located under the hood of the car but outside the engine block. An ignition distributor may be defined as a device which is used for the timing and distributing of the ignition voltage to the spark plugs at the proper instant, and in the proper firing order of the engine. The distributor is composed of two separate and distinct parts;

(1) The secondary or high-voltage section;

(2) The primary or low-voltage battery section.

The Low-Voltage Section of the Distributor

The low voltage, or primary circuit, consists of a **breaker arm**, **contact points**, and a **condenser**. One contact point is mounted on the breaker arm and is held closed by a tension spring. It is forced open by the action of **breaker cam** lobes against a rubbing block pressed on the breaker arm; the contact points are in series with an ignition coil and the storage battery of the car.

The Secondary Circuit

The secondary or high-voltage circuit of the distributor consists of a **rotor** and **distributor cap** which is made of a phenol resin compound. The cap has a terminal for each cylinder in the car and two others which connect to a **high-tension coil**. The purpose of the rotor is to distribute the high voltage necessary for the firing of the plugs to the different plugs at the proper instant.

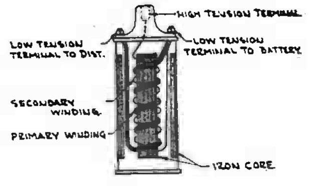

FIG. 11

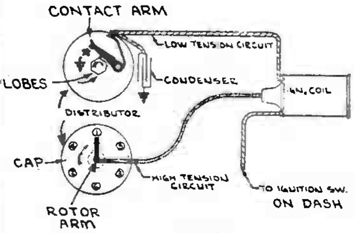

FIG. 12

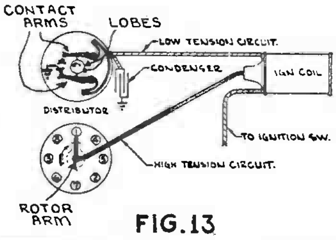

FIG. 13

Above, detail of the spark coil; below, two types of distributor systems.

That relation between the **rotor** and the **breaker cam** is always such that when the breaker cam causes the contact points to open, the rotor closes to a spark plug which happens to be operating at a particular instant.

The device which is used to generate the high voltage is shown diagramatically in Fig. 11. As may be seen, the coil consists of a heavy winding (the **primary**) wound over an iron core. This primary circuit connects, as will be shown later, to the car battery through the breaker arm in the distributor. The **secondary** or high-voltage winding is wound over the primary and connects to the rotor arm of the distributor, as will be shown later. The theory of operation is very simple.

When the primary circuit is broken by means of the breaker-arm contacts, a high voltage is generated in the secondary circuit which is applied to the terminals of a spark plug; the particular plug being determined by the position of the rotor arm in the distributor. When the primary circuit is broken, the voltage generated in the secondary increases and it is at this instant that the rotor arm makes contact in the distributor. In other words, the breaker arm acts in exact unison with the rotor arm in the manner illustrated in Fig. 12. As may be seen by reference to the figure, when the ignition switch on the dash is closed and the motor is turning over, the contact arm is making and breaking the battery circuit which induces the voltage in the secondary of the ignition coil that is applied to the particular spark plug making contact with the rotor arm. The numbers in the circles in the rotor arm cap signify the firing order of the cylinders. In this case, a six cylinder car is assumed. The type shown in Fig. 12 is the simplest distributor circuit that can be used. A condenser connected across the contact arm is used for the purpose of minimizing the sparking that occurs at the contacts when the breaker arm opens.

The second type of distributor shown in Fig. 13 is that using a breaker cam having as many lobes as there are cylinders in the motor, but having two breaker arms operating in parallel. These braker arms are set so that one point will open slightly later than the other. This allows the ignition coil a little longer period of time in which to build up and permits higher top car speeds. One ignition coil is used.

The third type is the one having a breaker cam with half as many lobes on the cam as there are cylinders in the motor and using two breaker arms. (See Fig. 14.) One breaker arm fires half the cylinders and the other breaker arm fires the other half of the cylinders. The fourth type of distributor uses a breaker cam having half as many lobes as there are cylinders in the motor and two breaker arms which have separate electrical circuits. (See Fig. 15.) The contact points must be set to open in proper relation to each other

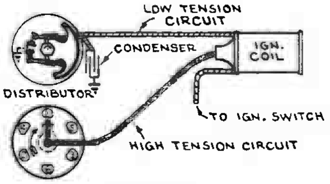

FIG. 14

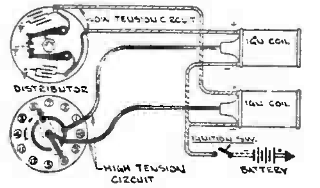

FIG. 15

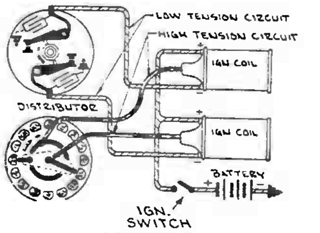

FIG. 16

Three additional types of distributor systems. They are described in the text.

the same as with the third type. Two ignition coils are used, one for each set of contact points. The third and fourth types of distributors allow a greater length of time for the points to be closed and coil to build up. This permits a greater engine speed than can be derived from the single breaker arm type distributor. The fifth type of distributor is the same as the fourth except that the breaker cam has as many lobes as there are cylinders and the contact points are set to open at the same time, but are electrically separated. Two ignition coils are required. This type of distributor is used for dual ignition engines. (See Fig. 16.)

Besides the above, there are various other relays that are part of the ignition system. A detailed analysis of the function of these relays will not be entered into merely because they do not play a very important role in the servicing of automotive receivers. They will be mentioned from time to time throughout the discussion wherever it is deemed advisable.

As probably everyone knows, the usual automobile is equipped with extensive lighting systems which are necessary and really constitute a part of the ignition system of the car, inasmuch as they are controlled by the battery system and constitute a drain on the automobile battery. An examination of the distributor system of current automobiles show that that practically every car has a different mode of connection. Consequently, it would be both unwise and impractical to publish these diagrams as they will probably change with every new model of car that is placed on the market.

THE GENERATOR

If some means were not provided for renewing the energy in the battery of a car, it would not be very long before one would be unable to start the motor. In order to facilitate charging the battery in the automobile, there is provided a small generator which is rotated by the car engine and which supplies the power necessary for charging the battery while the engine is running. Since this generator is a constant source of annoyance to owners of automobile radio sets, and since it cannot be removed, it might be well to outline the theory of operation of these generators so that the means taken for eliminating the annoyance that it causes will be appreciated. Because the radio set in a car usually obtains its power from the storage battery, it might at times be necessary to increase the rate at which the battery is charged. For this reason, a complete description of the various types of generators now in use, including their care and maintenance, will be of vital importance to every radio Service Man. The natural question which arises is how does a generator produce voltage? The answer is to be found in the elementary laws of magnetism.

Rigorous experiments show that when a wire cuts a magnetic field at right angles to the field, a voltage is generated in the wire. The wire must not necessarily carry current in order for the voltage to be generated. This voltage is produced only while the wire is in motion, and ceases as soon as the wire stops moving. The general idea is depicted in Fig. 17.

Poles N and S are the two poles of a permanent magnet, the lines of force of which extend directly from the N pole to the S pole. A wire, AB is placed above the magnet, and then moved rapidly down, cutting the lines of force as it moves. During the time it is moving, a voltage is generated between points A and B, which drops to zero **after** the wire has passed through the entire field. (The voltage would also drop to zero if the wire were suddenly stopped while still in the field.) Three conditions are necessary then, in order that a wire generate a voltage.

(1) The wire must be in motion;

(2) The wire must be in a magnetic field;

(3) The wire must not be moving parallel to the field.

The voltage generated in the wire is constant as long as the speed of the wire is constant, everything else remaining the same. If the strength of the field be increased, then the voltage generated increases in like proportion. The same rule holds in regard to the length of the wire in the field, i.e. the greater the length of wire in the field, the greater the voltage generated. These rules may be set down in the following manner:

(1) The voltage generated in a wire increases as the strength of the field increases.

This point requires some explanation. What is meant is that ne voltage generated in a wire increases as the strength of the field **in which the wire is moving** increases. Thus, with a certain strength field, let us say that the voltage generated in a certain wire is 2 volts. Now if the magnet is replaced with one of twice the strength, the generated voltage will be 4 volts.

In practice, the permanent magnets are replaced with **electromagnets**. An electromagnet is simply a coil of wire wound over an iron core. A current is sent through this coil which generates a magnetic field. Since the strength of this field varies directly as the strength of the current through this field coil (called **the field current**) the voltage generated in the rotating wire (called the **armature**) may be increased or decreased by varying the field current.

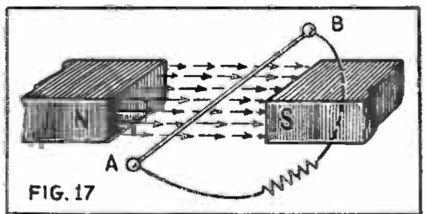

FIG. 17

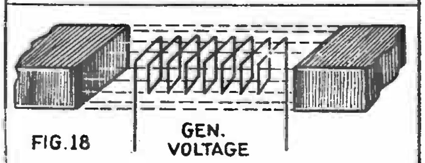

FIG. 18

(2) The voltage generated in a wire increases as the speed of cutting the field increases.

(3) The voltage generated in a wire increases as the length of the wire in the field increases.

The voltage that is generated depends upon each of the above factors, so that while any one of them might vary the magnitude of the voltage generated, all three must be taken into consideration in determining the actual value of the voltage.

The voltage generated in the manner shown in Fig. 17 will be the same if, instead of having the wire move and the magnet stationary, you have the wire stationary and the magnet move. It makes absolutely no difference to the amount of the voltage generated, whether the magnet or the wire moves, so long as one moves with respect to the other. This is in line with our previously mentioned statement that a voltage is generated when a wire cuts a magnetic field.

If the wire of Fig. 17 were looped as indicated in Fig. 18, the voltage generated in the loop would be greater, due to the increased length of wire in the field.

When voltage generation takes place, one end of the wire becomes positive, and the other end becomes negative. If the direction of motion is reversed, then the end formerly positive becomes negative and vice versa.

Now, in order that the terminals of the device generating the voltage be at a constant polarity, a device called a commutator is supplied. This is merely an arrangement of copper bars distributed around the periphery of the rotor's shaft and is **rigidly mounted on the shaft of the rotor or armature.** Two carbon brushes are mounted on this commutator, and their purpose is to collect the voltage that is generated by the armature. The source of magnetic field is a coil of very fine wire that connects directly to the brushes and is called the **field coil.** It is usually made in two sections diagonally opposite one another. In order to minimize the annoyance created by this generator in an automotive receiver, it is absolutely essential that there be no sparking between the brushes and the commutator. This brief description will serve to introduce the practical methods of dealing with automotive generators.

The purpose of a generator is to supply current for the lights and ignition of passenger cars, trucks or motorcoaches. It converts a small amount of mechanical energy from the engine into electrical energy which is carried through the wiring to the storage battery. The surplus electrical energy is stored as chemical energy in the battery for use at times when cranking of the engine is necessary, or when the consumption of electrical energy, due to lights and ignition, exceeds the generator output.

Generators are designed to take care of a particular kind of service and the total required current output determines the type of regulation (voltage variation) needed to supply the necessary current without damage to any part of the electrical system.

(1) Third Brush Regulation.
  (a) Thermostat control.
  (b) Manually controlled field resistance.
  (c) Lamp load control.
  (d) External voltage regulation.
(2) External Voltage and Current Regulation.

Third Brush Regulation

The third brush method of regulating current output is universally used because of its simplicity. It meets the average driving requirements as it provides maximum generator output at normal speeds and has a lower output at higher speeds. This system of current regulation involves the variation of the field strength and it accomplishes this result without any external apparatus or moving parts. The operation depends on the reaction of the magnetic field produced by the armature and the normal field from the poles.

The charging rate can be changed by altering the position of the third brush with respect to the main brushes. (See Fig. 19.) The third brush is mounted on a movable plate located inside the commutator end-frame. This plate is usually held in place by a clamp and a small round-head screw.

Before changing the position of the third brush or adjusting the charging rate of the generator, the circuit should be free of grease and oil, the brushes set properly and the brush arms checked for proper spring tension. All connections in the generator circuit should be clean and tight. The storage battery should be checked for the proper water level. Driving conditions of the individual car should be investigated **and under no conditions should the charging rate be set beyond the maximum rate specified for the particular generator.**

In order to adjust the charging rate to a greater value, loosen the locking screw located outside the commutator end frame and shift the third brush in **the direction of armature rotation.** The current output is decreased by shifting the brush opposite to the direction of armature rotation. After adjustments have been completed tighten the lock screw so there will be no change in output while the generator is in operation.

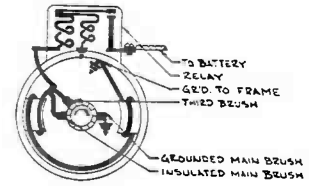

FIG. 19

Sketch showing the location of the third brush.

An accurate reading ammeter should be connected in the charging circuit at the generator terminal when adjustments are being made, and the maximum current output observed as the car is speeded up. Current output readings taken at the generator terminal will be approximately two amperes higher than readings taken at the dash ammeter. In case a two-coil ignition is used instead of a single coil, the readings at the generator terminal will be approximately four amperes higher than the dash ammeter readings.

An important factor that must not be overlooked in this type of regulation is that the generator must not be operated unless it is connected to a battery or damage to the unit will result, as the battery plays an important part in maintaining a normal voltage. condition.

When the generator is operated on open circuit, the voltage will rise abnormally high, thus increasing several times the normal amount of current through the field winding and cause the insulation on the field coil and armature to be burned. When the generator is to be operated without being connected to the battery it should be short circuited by connecting the insulated main lead to the ground. (See Fig. 19.)

With this type of regulation there is the tendency for the charging rate to increase as the battery becomes fully charged. This is caused by the rise in the terminal voltage of the battery as it becomes fully charged. Any rise in battery voltage causes an increase in generator voltage. thus increasing the current in the field coils.

On passenger cars, the generator charging rates usually can be adjusted so that overcharged- or undercharged-battery conditions will not exist. When the generator leaves the factory its output is adjusted to a safe value that is suitable for average driving conditions for the car on which it is installed.

Thermostat Control

The thermostat control of the generator is used in addition to the third-brush regulation. This unit acts as a protective device as well as an output regulator and prevents overheating of the generator. The thermostat is mounted inside the generator at the commutator end where it is readily influenced by internal heat.

The thermostat consists essentially of a resistance coil and a set of contact points. The lower contact point is mounted on a bi-metal strip, and when this is subjected to a certain predetermined temperature, the points open due to the warping action of the blade. (See Fig. 20.) These bi-metal strips are calibrated for either 165° or 200° Fahrenheit.

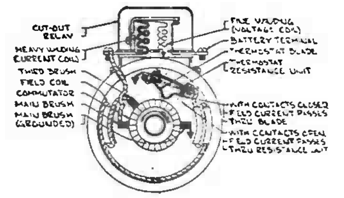

FIG. 20

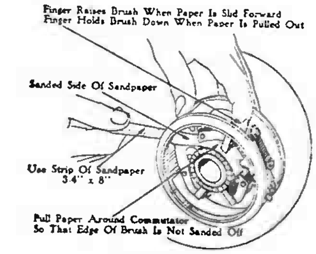

FIG. 22

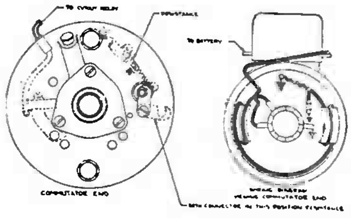

FIG. 21

The center sketch shows how brushes are to be seated properly.

When the internal temperature of the generator reaches the calibrated temperature of the thermostat, the contact points will automatically open; thereby inserting into the field circuit a resistance which will decrease the charging rate approximately 40%. The field current which previously passed through the contact points is shunted through the resistance unit. (See Fig. 20.) Resistance units vary in size. They usually are ½, ¾, 1 or 1½ ohms resistance. The size of the resistance depends upon the type of operation to which the generator is adapted.

The contact points are closed, or returned to their normal position, as soon as the temperature has again become normal. The thermostat unit is entirely automatic and requires no attention other than to keep the contacts free from dirt. The unit is calibrated at the factory and properly adjusted. The contact points may be kept clean by passing a heavy piece of paper between them.

Manually Controlled Field Resistance

Some generators do not have the automatic feature of the thermostat control but have a resistance unit mounted on a bracket inside the generator at the commutator end. The unit can be inserted in the field circuit of the generator which will decrease the maximum current output. (See Fig. 21.)

This type of high- and low-output generator with third-brush current regulation gives a wide range of output adjustments and is applicable to trucks operated entirely in the day time when very little current is required. If the truck is driven considerably at night with normal lamp load, the full capacity of the generator would then be required.

When desiring to use the low output setting of the generator, insert the resistance unit into the field coil circuit by disconnecting one end of the small connector strap outside the commutator end frame. (See Fig. 21.) This connection is closed for high output. The current output is regulated by the third brush setting the same way as on other types of third-brush generators.

External Voltage Regulation

Another form of output regulation is the use of a third brush generator having an external voltage regulator. This type of regulation is usually confined to motor-coach installations.

Since there is a wide range between requirements of the generator at night when all lights are on and in the daytime when little current is consumed, an auxiliary control device will vary the output to suit the conditions.

The third-brush generator output has an inherent characteristic of tapering off at high speeds. The peak current output of a third brush generator tends to increase as the battery becomes fully charged, but with the use of external voltage regulation this variation in the charging rate is controlled. The voltage regulator will vary the charging rate according to the state of charge of the battery, and with a fully charged battery the rate will be reduced to a minimum of approximately five amperes. This protects the lights from damage and the battery from overcharge. The generator is protected by the third brush setting. This specified current output should not be exceeded when making adjustments on this type of generator.

Inspecting and Repairing

It is advisable to inspect the generator at least every twenty thousand (20,000) miles and make any adjustments or repairs needed. Have the various parts taken out, thoroughly cleaned and greased, and any parts excessively worn, repaired or replaced. If the commutator is worn or eccentric, it should be turned in a lathe to true it. The mica in the commutator (between the bars) should be undercut. Commutator and brushes should be kept clean. Brushes should seat well. All circuits of the system should be tested for broken insulation, grounds, etc.

Squeaking Brushes

Squeaking of generator brushes may be overcome in most cases by carefully sanding the brushes with sand-cloth or sand-paper. (See Fig. 22.) **Emery cloth should never be used.** A squeak may be due either to a poorly seated brush, improper brush spring tension, or to a hard spot in the surface of the brush. If the commutator surface is rough or irregular, it should be made smooth before attempting to properly seat the brushes. This may require a turning operation in a lathe.

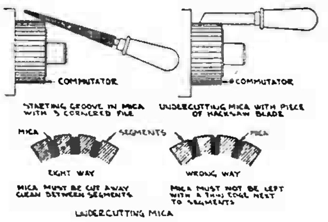

FIG.23

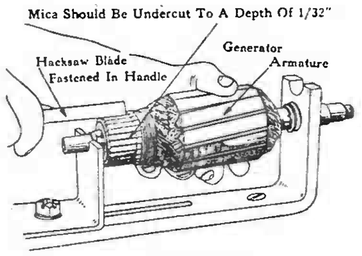

FIG.24

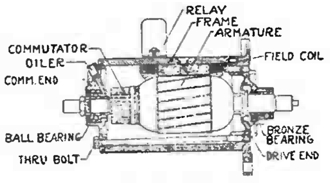

FIG.25

The sketch above indicates the method used to undercut mica.

Correct Brush Seat

To obtain a correct charging rate with any given position of the third brush, all brushes must be well seated on the commutator. It is comparatively easy to thread a strip of No. 00 sandpaper or sandcloth around a portion of the commutator with the rough side next to the brush or brushes. (See Fig. 22.) A few strokes with the sandcloth correctly forms the brush seat. If brushes are fully seated on the commutator there will probably be less arcing, thus preventing commutators from becoming dirty.

A brush which is set at the proper angle on the commutator, but is very poorly seated, will greatly vary the output as it wears down to the proper seat. Also improperly seated brushes tend to be noisy.

Brush Spring Tension

In case the brush tension becomes weak for any cause, the charging rate will be reduced, and more or less arcing and burning of the commutator will result because of poor contact of the brushes on the commutator.

Excessive spring tension will cause the commutator and brushes to wear faster, reducing the amount of service to be obtained from them.

Undercutting Insulation

The commutator bars of all generator armatures are insulated from each other by mica or a bakelite composition known as **micarta.** This insulation between the bars should be undercut about 1/32 inch in depth. (See Figs. 23 and 24.) When renewing brushes in a generator with an undercut armature, it is necessary to sand the brushes to a good seat to prevent noisy operation and arcing.

If an armature in service is found with the commutator worn, grooved or with a rough and burned surface, showing high insulation leakage between the commutator bars, it should be placed in a lathe and the commutator turned down. This work should be done carefully, as the surface of the commutator must be concentric with the armature shaft to insure proper performance. Before placing the armature in the lathe, remove any burrs or foreign material that may have collected in the center hole of the armature shaft. Turn the armature at a reasonably high speed and use a fine feed and a very sharp tool.

When the commutator is turned down, undercut the mica between the copper bars to 1/32 inch, keeping the slot rectangular in shape and the edges free from the insulating material.

There are several undercutting machines on the market which can be used for this purpose. In the absence of a machine, the work may be accomplished with a hack saw blade, after having ground off the sides of its teeth until it will cut a slot slightly wider than the insulating material. (See Fig. 24.) The final assembly of a typical generator in its frame is shown in Fig. 25.

After the undercutting operation remove burrs and smooth off the commutator with No. 00 sandpaper. With the use of air, blow out all loose particles between the commutator bars after sanding.

INTERFERENCE

Since the installation of the first motor car radio, interference originating in the circuits necessary for the proper functioning of the car as a motor vehicle has been serious. With the advent of motor car receivers for high sensitivity (about 5 microvolts per meter) these effects have become even more bothersome. It is the purpose of this section to discuss the nature of these disturbances and the practical means of reducing them to such levels that their effects in the loud speaker of the auto radio are inaudible. We all dream of that radio Utopia where noises from all sorts of electrical interference are eliminated, but for the present, let us assume that circuits outside the car itself are beyond our control.

Practically all motor vehicles using radio sets are equipped with lighting generators and battery ignition systems. The sources of interference with such ignition systems, as previously described, may originate at any one of the following places:

(1) At the spark plugs.

(2) At the high-tension distributor or at poorly connected leads in its circuit.

(3) At the low-tension interrupter.

(4) At the generator brushes.

Any sparking which may occur at any of the above mentioned locations may be conveyed to the radio receiver either by radiation from the point of sparking or by conduction along the car wiring and other insulated conductors or by both. These discharges occur at an audio-frequency rate and are of sufficient intensity to be picked up by the antenna even though the supply leads to the receiver are filtered or sealed.

In some cases, the voltage developed in a neighboring circuit by one discharge is sufficient to produce a secondary spark which, in turn, is a source of radiation. The conductors composing the car wiring may also act as an antenna and radiate energy into the automotive receiver exactly as does a broadcasting station.

The frequencies of the discharges (radiation) may be determined by the distributed inductances and capacitances of the leads coupled to the various sources. Since the leads are short and are insulated these distributed constants are small, and the frequency of radiation is well above the broadcast band.

Short-wave fans are acquainted with the fact that in the short-wave bands, the radiation from passing motors is very troublesome. In fact, an amateur who was particularly interested found that the radio disturbances from a model "T" Ford was most noticeable at a wave length of about 5 meters.

Shielding

An obvious means of reducing the radio interference in any motor installation equipped with spark ignition is by shielding the complete electrical system. This method is standard practice in airplanes and has been successfully applied to motor cars. Complete shielding, however, is impractical in stock cars due to the complexity of the wiring and the cost involved.

It should be pointed out that shielding does not reduce the energy of the disturbances but merely confines it within the enclosure of the shield. Partial shielding may even increase the radiation from the remaining unshielded wiring by resonating parts of the circuit to frequencies nearer the broadcast band. This change of resonant frequency is brought about by the additional capacity of the shield to the ground. In other words, it may be said that sometimes connecting a capacity to ground may increase the energy of the interference.

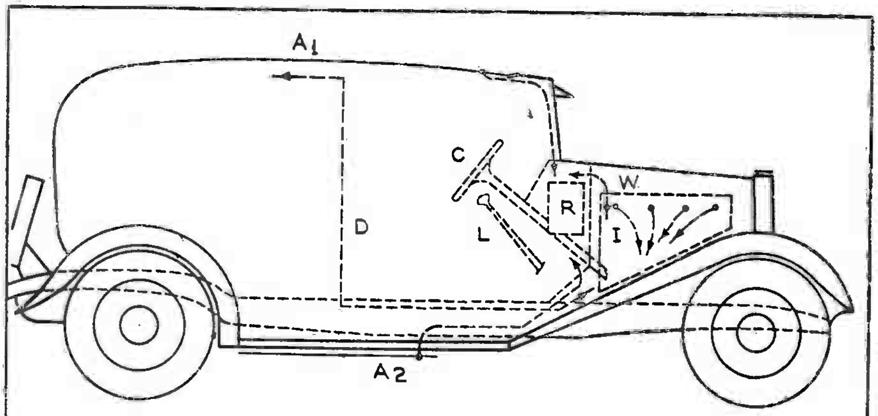

FIG. 26

Schematic circuit of an automobile showing the circuits to be considered in analyzing interference.

A BETTER REMEDY IS TO REDUCE THE DISTURBANCES AT THEIR SOURCES BELOW TROUBLESOME LEVELS WITHOUT IMPAIRING THE OPERATION OF THE VEHICLE.

Relative Location of the Circuits

Fig. 26 shows schematically the location of the circuits which must be considered. The heavy lines indicate the car body, usually of metal, and the receiver chassis R, which are considered to be at ground potential. A1 and A2 are alternative antennas, that is, the antenna may either be of the roof or of the metal-plate type. All ordinary initial disturbances occur within the engine compartment. I is the high tension ignition wiring, the principle source of disturbance; W any wiring from the engine compartment to the receiver or space near the receiver; D any long leads coupling the antenna to the source. The breaker arm in the distributor and the lighting generator (not shown) are also located in the engine compartment, and as far as general position is concerned, may be considered with the high-tension circuits. It may also be noted that the steering column C and the gear shift lever are not above suspicion in certain types of cars. Antennas of the above type have almost no inductances and have capacities of from 100 to 300 mmf. They are practically non-directional, regardless of the type of antenna used; their lead-ins should be shielded by copper braiding and be located as far back as possible from the source of interference—the engine compartment. The braid should be well connected to the receiver chassis and prevented from grounding intermittently at any other points. Because the strength of the interference is somewhat stronger above the car than in the shielded space beneath it, the capacity plate antenna A2 is sometimes preferable to the roof type A1.

High Tension Ignition Circuits

By far the greatest intensity of interference is from the spark plugs.

Figure 27 shows the wiring of a typical high-tension battery ignition system. The car battery, which also supplies power for all of the other electrical equipment on the car, feeds the primary winding of the ignition coil through a cam operated interrupter which, incidentally, is run at ½ crankshaft speed. The secondary winding of the coil is connected successively to the spark plugs through the rotating distributor switch, or rotor, which is operated synchronously with the cam. This has been covered previously in another section. The condenser C, across the interrupter contacts, aids in extinguishing the contact arcing and is of a size to resonate at a frequency of from 2000 to 3000 cycles per second with the primary inductance of the coil. This condenser is an integral part of the distributor system and is supplied with the car. It is interesting to know that during the time secondary current flows (when one of the plugs is firing) the high-tension winding is practically short circuited by the spark at the plugs and the frequency of radiation is of the order of 8000 cycles per second; while with the secondary open, (no current flowing) the frequency is of the order of 2300 cycles per second. It

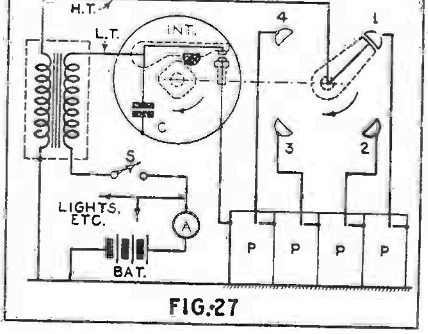

FIG. 27

Wiring diagram of a typical distributor system.

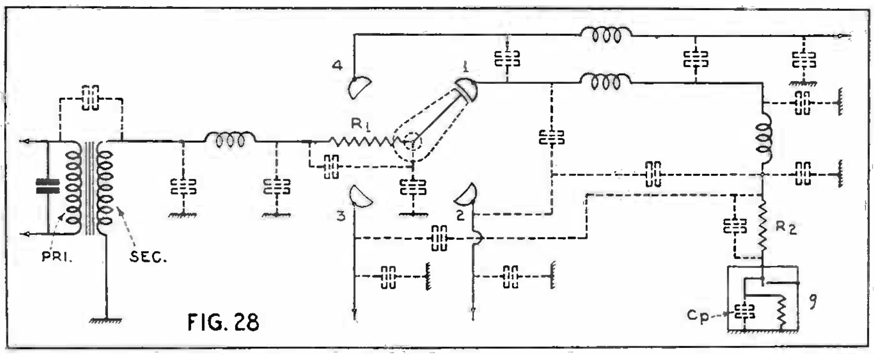

FIG. 28

An excellent sketch of the distributed inductances, capacitances and resistances in a car.

might be well to mention that the above numbers are the **audio** frequencies and not the carrier frequencies.

Figure 28 shows the distributed inductances and capacitors of the spark-plug circuit. It is impossible to represent them accurately because of the variation in the cable lengths and the distances to the engine block, hood, low-tension leads, and to high-tension leads to different spark plugs. An examination of this figure will indicate that at a critical voltage (about 6000 or 7000 volts), depending upon the fuel mixture, the temperature and the separation of the plug electrodes, a spark passes to ground at the plug which which practically short circuits the secondary end of the high-tension coil. The stored energy in the dielectric field of the distributed capacities about the conductors all the way back to the coil is discharged, and is a source of radiation of considerable power.

Shielding only the high-tension leads has the effect of increasing the capacity to ground and of increasing the energy to be released when the spark discharge at the plug occurs. However, adding a single "lumped" series inductance changes the frequencies and may reduce the number of harmonics radiated **but does not decrease the energy, and cannot be depended upon to eliminate interference.**

Ignition Suppressors

The most effective means of reducing these radiations is to insert series resistances in the leads leading to the sparking electrodes. **A single resistor, close to the rotor in the distributor, connected in series with the ignition-coil lead that terminates at the rotor arm, and resistors in the leads at each of the spark plugs are quite effective.** Fig. D shows several types of commercial resistors, called **suppressors,** which are all of carbon mixtures. The long unit showing the two types of terminals, and whose component parts are shown immediately to the right, has a bakelite case to prevent it from grounding. The porcelain covered units shown at the top and bottom are sealed and may not be disassembled. The two units of larger diameter, shown to the left, were of earlier manufacture and are discussed below. Two qualifications that suppressor resistors should have are (1) the ability to carry high instantaneous currents without deteriorating and (2) must have a low terminal capacity to prevent coupling around them.

The first commercial resistors used as suppressors were of short length, of comparatively large cross-section, and had large terminals as shown to the left of Fig. D. The resistance material used was carbon, and had intense voltage drops between particles, resulting in luminous destructive discharges from particle to particle through the binder. The large terminals added self capacity to the suppressor and also to ground from the spark plug terminal, and were rather ineffective. In some cases, flash-over actually occurred between the terminals. A better suppressor was formed of materials of smaller resistance per unit length, of greater length and smaller cross sectional area. The area of the terminal attached to the plug was reduced and the resistor located as near as possible to the plug.

Spark plugs are now being manufactured with the resistance material included inside the porcelain insulator. This construction still further reduces the self capacity of the resistor and the exposure of the unprotected circuit. It is predicted that when motor cars are factory equipped with radios, it will be found advantageous to include the suppressor resistors in the structure of the distributor rotor itself.

Unexpected Discharges

The high-tension current easily passes through the cables from the coil to the plugs even though the wire in the cable does not actually make contact with the terminals of the plugs. This often happens with installations which have seen several thousand miles of service. All cables should be checked for continuity to terminals to eliminate these extra sparks. The interrupter mechanism is often mounted on a plate which is movable by means of the spark-advance lever. Sometimes the whole distributor housing is turned for advance and retard of the spark. In such cases it is necessary to eliminate sparking through the oil and dirt between these metal surfaces by shunting the joint with a flexible braid.

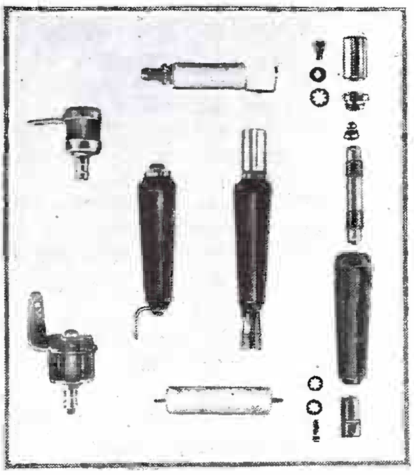

Fig. D

Photograph of the commonly used types of suppressor resistors. (Courtesy, Lynch Mfg. Co.)

Effect of Suppressors on Ignition

Even the smallest spark at the plug electrodes is capable of producing ignition, but it may only be produced at a critical voltage. The equivalent low frequency diagram of a spark-plug circuit involved in this discussion is shown in Fig. 29. The insulating resistance of the spark plug and of any foreign deposits on its surface is represented by g. At high engine temperatures, or low temperatures if the porcelain is wet, this may be considerable. Now with large series resistances R1 and R2, the voltage developed across G (the spark-plug gap) may be insufficient to produce a spark across the gap terminals. With excessive cable leakage, or gap capacity to ground, the spark-plug voltage would be further reduced. Suppressor resistors of the order of 15,000 ohms are perfectly satisfactory from an ignition standpoint. These resistors are large enough in value to materially reduce the interference, but even for these values, the cables and plugs must be in good condition, and the plug gaps must be as small as is consistent with fuel mixture, compression and engine speed.

Low-Tension Interference

Figure 30 shows the primary circuit and the distributed constants involved in interference originating at the low-tension interrupter or breaker arm. The function of condenser C1, as previously stated, which is connected across the interrupter or breaker arm is to form a low-frequency oscillating circuit with the primary of the ignition coil and to assist in extinguishing the arc or spark at the contacts. This capacity must not be increased in size as the frequency of the primary oscillation and consequently their induced voltage in the secondary, would be thereby reduced.

Excessive capacity across these leads also causes pitting of the tungsten contacts. A resistance connected in series with the primary lead near the interrupter is not allowable since this would reduce the primary current below an operating value. **An additional condenser C2 on the supply terminal of the coil effectively grounds the high-frequency impulses at this point and prevents their conduction along the supply lead.** The lead from the ignition coil to the interrupter should be as short as possible and not coupled (placed adjacent to) to other conductors which might direct the impulses. In some cases, it is advisable to shield this lead carefully and ground it at both the interrupter and coil housings. Shielding this lead is usually necessary if the coil is mounted on the bulkhead or under the instrument panel. The shielding and the condenser C2 above mentioned also serve to keep any interference from residual high-tension disturbances, which were not eliminated by the suppressors but which were bypassed to other low-tension terminals by the capacity of the windings of the coil, from passing further along the supply leads.

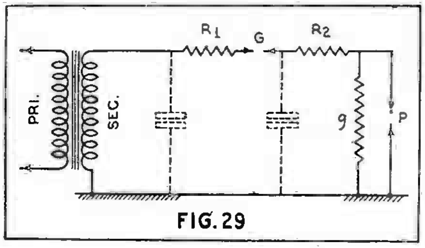

FIG. 29

Equivalent circuit of a spark plug connection.

Both high- and low-tension disturbances are more easily eliminated if the coil is close to the distributor, and no conductor connected between the coil and interrupter is lead to the instrument panel. This connection as well as the high-tension cable should be as short as possible. For the Service Man who is in doubt as to the location of this condenser, C2, a table, given in a following section should be consulted.

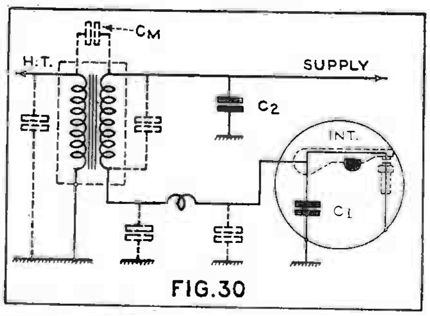

FIG. 30

Distributed constants of the primary circuits of the coil.

Commutator Interference

The circuit of a typical third brush lighting generator is shown in Fig. 31. A spark originating at brush B causes the radiation of energy which is conducted along the live lead through the generator cut-out to the car wiring from which they may be radiated. An effective means of eliminating this source of disturbance is to bypass the live lead as near as possible to the source. Condensers mounted on the cut-out cover are sometimes ineffective because of the resistance of the cover to ground. The ground connection should be as short as possible and securely bonded to the generator frame. The complete job should be checked at all engine speeds since brush sparking depends upon load and speed.

Residual Interference

In spite of the precautions taken as described, it is safe to say that in every case the disturbances are not completely eliminated but are only reduced in level. Conditions of coupling and radiation vary widely between different models of cars and even between chasses which are supposedly identical. Where the engine is mounted on rubber and the connections from the car body to the frame vary in resistance or actually fail to make contact, the complex high-frequency field is radically changed. Long leads for high- and low-frequency circuits are often a source of trouble. It is therefore advisable to filter or shield the supply leads entering the receiver. Since the filaments of the tubes in the set must be supplied by the same battery which is connected to the devices causing the interference, shielding the filament leads is usually ineffective unless both leads and shields are carried directly to the battery terminals. These leads may remain entirely unshielded if a choke and condenser filter is provided at the point where they enter the receiver chassis. The leads from the "B" battery or "B" eliminator may remain unshielded if they are not closely coupled to interference circuits and if a bypass condenser is used where each lead enters the receiver housing.

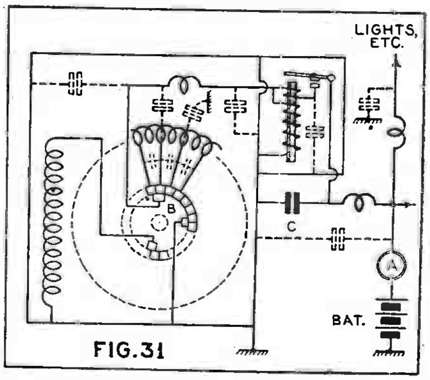

FIG. 31

Complete circuit of a typical third-brush generator circuit.

Interference tests are usually made by listening for noise in the loudspeaker with the receiver adjusted for full sensitivity but not tuned to a broadcasting station. This should be done in a location where external interference is low. The engine hood should be closed and latched to prevent other than normal radiation from the engine compartment.

PROCEDURE IN INSTALLATION

In making a motor car radio installation it is well to proceed in the following manner:

(a) Install the receiver chassis, speaker and accessories. Use a shielded antenna lead and make sure that both the chassis and the shielding braid are carefully grounded.

(b) Check the ignition system for the condition of the spark plugs and the interrupter contacts. Make sure that all high-tension cables actually contact with the terminals at the distributor, plugs or coil. Replace all leaky high-tension cables.

(c) Connect the rotor and spark plug suppressors, the generator condenser and the condenser on the supply side of the coil. Make sure that the resistors are close to the proper terminals and keep the condenser leads short.

(d) If the coil supply-lead passes through the same conduit as the high-tension cables, move it to a position where it will be coupled to them as little as possible.

(e) Make sure that the interrupter mechanism is actually grounded—if necessary shunt it to the engine frame.

If interference still exists proceed in the following order:—

(f) If the coil is far from the distributor, move it if it is allowed.

(g) If the coil must remain remote from the distributor, shield the lead from the coil to the interrupter and ground the braid to the coil and the distributor housings.

(h) Be sure that the coil housing is well grounded to the engine block. If it is still mounted on the bulkhead, ground it through a flexible braided lead.

(i) Clamp all the low-voltage wiring as close to the car frame as possible.

(j) Shield the the 6-volt supply leads to the receiver and carry them back to the battery terminals.

(k) Check the interference with the dome light leads disconnected as near the source of interference as possible. If this reduces the interference, insert a filter in these leads.

(l) Check the grounding of the steering column. If necessary, add a flexible copper braid between the tube and frame.

(m) If the common high-tension lead is long, shield it with copper braid, grounding the braid as often as possible along its length.

(n) Try other logical expedients suggested by the particular installation.

In view of the fact that nearly every car will require a bypass or filter condenser on either the generator, ignition coil, ammeter or all three, the following list of the most desirable location for these condensers for various makes of cars is reproduced below.

AUBURN; 1931, 8 CYL.

Generator: Fasten under outside cut-out screw, connect pigtail to inside cut-out terminal.

Ignition Coil: Fasten under rear coil mounting nut, connect pigtail to rear coil terminal.

Ammeter: Fasten under right-upper instrument board screw, pigtail to battery terminal of ammeter.

BUICK; 1930, 40 SERIES.

Generator: Fasten under outside cut-out mounting screw, connect pigtail to inside cut-out terminal.

Ignition Coil: Fasten under outside coil-bracket bolt, connect pigtail to outside coil terminal.

Ammeter: Fasten under panel-mounting screw below ammeter, connect pigtail to terminal giving best results.

BUICK; 50 SERIES, 8 CYL.

Generator: Fasten under outside cut-out mounting screw, connect pigtail to inside cut-out terminal.

Ignition Coil: Fasten under outside coil bracket bolt, connect pigtail to outside coil terminal.

Ammeter: Fasten under bottom circuit breaker screw, connect pigtail to terminal giving best results.

BUICK; 60 SERIES, 1932, 8 CYL.

Generator: Fasten under outside cut-out mounting screw and connect pigtail to inside cut-out terminal.

Ignition Coil: Fasten under outside coil-bracket bolt and connect pigtail to outside coil terminal.

Ammeter: Fasten under bottom circuit breaker screw, connecting pigtail for best results.

BUICK; 80 SERIES, 1932, 8 CYL.

Generator: Fasten under outside cut-out mounting screw, connect pigtail to inside cut-out terminal.

Ignition Coil: Fasten under outside coil bracket bolt, connect pigtail to outside coil terminal.

Ammeter: Fasten under bottom circuit-breaker screw, connecting pigtail to terminal that gives best results.

BUICK; 90 SERIES, 1932, 8 CYL.

Generator: Fasten under outside cut-out mounting screw, connect pigtail to inside cut-out terminal.

Ignition Coil: Fasten under outside coil-bracket bolt, connect pigtail to outside coil terminal.

Ammeter: Fasten under bottom circuit-breaker screw, connecting pitgail to the terminal that gives best results.

CADILLAC; 1931, V-8.

Generator: Fasten outside cut-out mounting screw, connect pigtail to the front cut-out terminal.

Ignition Coil: Fasten under upper junction box wing nut, connect pigtail to coil wire terminal in junction box.

Ammeter: Make hole and bolt to bottom edge of instrument panel, connect for best results.

CADILLAC; 1931, V-12.

Generator: Fasten under top screw of bearing plate, connect pigtail to generator terminal.

Ignition Coil: Fasten to coil lamp bolt, connect pigtail to coil terminal connected to wire from switch.

Ammeter: Make hole and bolt to bottom edge of instrument panel, connect pigtail for best results.

CADILLAC; 1931, V-16.

Generator: Fasten under top screw of bearing plate, connect pigtail to generator terminal.

Ignition Coil: Fasten to coil lamp bolt, connect pigtail to coil terminal connected to wire from switch.

Ammeter: Fasten under upper right instrument board nut, try pigtail connections for best results.

CHEVROLET; 1930, 6 CYL.

Generator: Fasten under outside cut-out mounting screw, connect pigtail to rear cut-out terminal.

Ignition Coil: None used.

Ammeter: Fasten under lower gas gauge mounting screw, connect pigtail to battery terminal or ammeter.

CHEVROLET; ALL MODELS, 1932 6 CYL.

Generator: Fasten under outside cut-out mounting screw, connect pigtail to rear cut-out terminal.

Ignition Coil: Fasten under inside coil retaining bolt, try connecting pigtail to each coil terminal for best results.

Ammeter: Make hole and bolt to lower edge of instrument panel, connecting pigtail to the ammeter terminal that gives best results.

CHRYSLER; 1931, 6 CYL.

Generator: Fasten under outside cut-out mounting screw, connect pigtail to rear cut-out connection.

Ignition Coil: Fasten under upper coil mounting screw, connect pigtail to right coil terminal.

Ammeter: Fasten under panel brace nut, try pigtail connections for best results.

CHRYSLER; 1931, 8 CYL.

Generator: Fasten under outside cut-out mounting screw, connect pigtail to rear cut-out connection.

Ignition Coil: Fasten under upper coil mounting screw, connect pigtail to right coil terminal.

Ammeter: Fasten under lower gas gauge nut, try pigtail connections for best results.

CHRYSLER; IMPERIAL, 1931, 8 CYL.

Generator: Fasten under outside cut-out mounting screw, connect pigtail to rear cut-out terminal.

Ignition Coil: Fasten under lower coil mounting nut. Connect pigtail to right coil terminal.

Ammeter: Fasten under right circuit breaker mounting screw. Connect pigtail to the terminal that gives best results.

DE SOTO; COUPE, 1931, 6 CYL.

Generator: Fasten under outside cut-out mounting screw, connect pigtail to rear cut-out terminal.

Ignition Coil: None used.

Ammeter: Fasten under panel brace screw, connect pigtail to light wire terminal of ammeter.

DODGE; 1931, 8 CYL.

Generator: Fasten under outside cut-out mounting screw, connect pigtail to rear cut-out terminal.

Ignition Coil: Fasten under upper coil mounting nut, connect pigtail to right coil terminal.

Ammeter: Fasten under lower instrument mounting screw, try pigtail connection for best results.

ESSEX; 1930, 6 CYL.

Generator: Fasten under outside cut out mounting screw, connect pigtail to rear generator terminal.

Ignition Coil: None used.

Ammeter: Fasten with bolt through bulkhead left of junction box, connect pigtail to left terminal of junction box.

FORD; A, 1930 and 1931, 4 CYL.

Generator: Fasten under outside cut-out mounting screw, connect pigtail to rear generator terminal.

Ignition Coil: None used.

Junction Box: Bolt to bulkhead of junction box, connect pigtail to left terminal of junction box.

HUDSON; 1931, 8 CYL.

Generator: Fasten under outside cut-out mounting screw, connect pigtail to bottom cut-out terminal.

Ignition Coil: None used.

Ammeter: Fasten under lower ammeter mounting screw, connect pigtail to light wire terminal.

LINCOLN; 1931, 8 CYL.

Generator: Fasten under inside cut-out mounting screw, connect pigtail to bottom cut-out terminal.

Ignition Coil: Bolt to coil mounting plate, connect pigtail to battery terminal of coil. Requires one for each coil.

Ammeter: Fasten under clamp nut to right of clock, try pigtail connection for best results.

OAKLAND; 1931, 8 CYL.

Generator: Fasten under right cut-out mounting screw, connect pigtail to rear cut-out terminal.

Ignition Coil: Fasten under upper left speedometer nut, connect pigtail to right coil terminal.

Ammeter: Fasten under bottom speedometer nut, try pigtail connections for best results.

OLDSMOBILE; 1931, 6 CYL.

Generator: Fasten under outside cut-out mounting screw, connect pigtail to rear cut-out terminal.

Ignition Coil: Fasten under coil clamp screw, connect pigtail to right coil terminal.

Ammeter: Fasten under right instrument clamp screw nut, connect pigtail for best results.

PACKARD; 1929, 8 CYL.

Generator: Fasten under outside cut-out mounting screw, connect pigtail to outside cut-out terminal.

Ignition Coil: Fasten to special coil bracket, connect pigtail to switch wire terminal.

Ammeter: Make hole in bottom edge of instrument panel, bolt to this, try pigtail connection to ammeter terminal that gives best results.

PACKARD; 1932, 8 CYL.

Generator: Fasten under cut-out mounting screw, try connections for best result.

Ignition Coil: Fasten to special coil bracket, connect pigtail to switch wire terminal.

Ammeter: Fasten under left ammeter clamp nut, try pigtail connections for best result.

PIERCE ARROW; 1931, 8 CYL.

Generator: Fasten under outside cut-out mounting screw, connecting pigtail to rear cut-out terminal.

Ignition Coil: Fasten under right coil mounting screw, connect pigtail to top terminal of coil.

Ammeter: Fasten under bottom speedometer nut, connect pigtail for best results.

PLYMOUTH; 1931, 4 CYL.

Generator: Fasten under outside cut-out mounting screw, connect pigtail to rear cut-out terminal.

Ignition Coil: Fasten under upper coil mounting nut, connect pigtail to right coil terminal.

Ammeter: Fasten under lock nut under speedometer, connect pigtail to terminal that gives best results.

PONTIAC; 1931, 6 CYL.

Generator: Fasten under outside cut-out mounting screw, connect pigtail to rear cut-out terminal.

Ignition Coil: Fasten under upper left speedometer nut, connect pigtail to battery terminal of coil.

Ammeter: Fasten under bottom speedometer nut, connect pigtail for best results.

STUDEBAKER; COUPE, 1930, 8 CYL.

Generator: Fasten under inside cut-out mounting screw, connect pigtail to rear cut-out terminal.

Ignition Coil: Fasten under left bolt of coil bracket, connect pigtail to switch wire terminal of coil.

Ammeter: Fasten to bottom edge of instrument panel, try pigtail connection for best results.

STUDEBAKER; 1932, 6 CYL.

Generator: Fasten under inside cut-out mounting screw, connect pigtail to rear cut-out terminal.

Ignition Coil: Fasten under screw in bottom of circuit breaker, connect pigtail to right coil terminal.

Ammeter: Bolt hole provided in bottom edge of instrument panel, connect pigtail for best results.

STUDEBAKER; DICTATOR 1932, 8 CYL.

Generator: Fasten under gear case nut at base of No. 1 cylinder, pigtail to inside cut-out terminal.

Ignition Coil: Fasten under screw in bottom of circuit breaker, connect pigtail to right coil terminal.

Ammeter: Bolt hole provided in bottom edge of instrument panel. Use two capacitors, one on each side of ammeter.

STUDEBAKER; COMMANDER, 1932, 8 CYL.

Generator: Fasten under gear case nut at base of No. 1 cylinder, pigtail to inside cut-out terminal.

Ignition Coil: Fasten under screw in bottom of circuit breaker, connect pigtail to right coil terminal.

Ammeter: Bolt hole provided in bottom edge of instrument panel, connect pigtail for best results.

STUDEBAKER; PRESIDENT 1932, 8 CYL..

Generator: Fasten under gear case nut at base of No. 1 cylinder, pigtail to right coil terminal.

Ignition Coil: Fasten under screw in bottom of circuit breaker, connect pigtail to right coil terminal.

Ammeter: Bolt hole provided in bottom edge of instrument panel, connect pigtail for best results.

THE POWER SUPPLY

Usually, automotive receivers are designed so that their "B" potential is secured from batteries. In this connection, it may be stated that the old question, "how long will my batteries last," is now more difficult to answer than ever before. A set of batteries may last, say for example, six months when used with a certain receiver in the home a certain number of hours per day. This same set of batteries may last two weeks when used the same number of hours with the same set in an automobile. Why? The answer is relatively simple.

If the batteries are placed in such a location that water from rain, splashing, etc., falls upon it, the battery becomes water soaked and its life decreases rapidly. This obviously, is an objection to the use of batteries for supplying the "B" potential for the radio set in a car. The usual inconvenience of replacing batteries just at the time when it is desired to use the set most is another reason for its discontinuance. However, in view of its relatively quiet operation, lack of moving parts, etc., it is preferred by many owners of auto radio receivers. The present trend, however, seems to be toward an electrical device capable of supplying sufficient power to operate the ordinary broadcast receiver.

This device, whatever it may happen to be, depends for its operation upon the automobile battery in the car. Usually, the car battery is already taxed to its maximum capacity by the lighting system of the car and any other contrivances such as cigar lighters, spotlights, etc. Before an electrically operated power unit can be installed, one must be absolutely sure that the additional drain on the battery will not cause its voltage to decrease to the point where it will not start the car or operate the lights when the motor is not running.

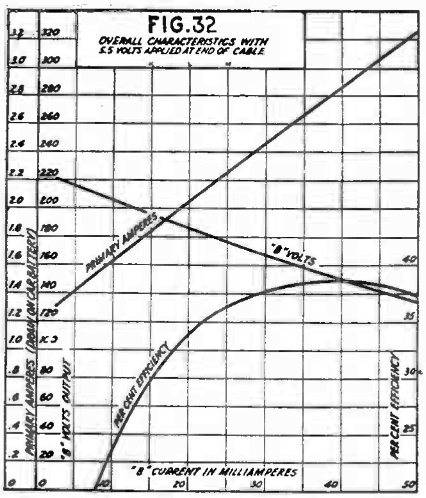

Overall characteristics of the Magmotor with 5.5 volts applied.

There are several power units available which are suitable for use in automotive radio receivers. These may be substituted for the "B" batteries already in use.

A general description of these devices is not possible since every manufacturer has his own idea as to just what they should contain. The only general statement possible is that they are all of the rotating type and in order to clarify the design factors in the minds of the readers, we will present a description of some of the more important replacement units that are available on the market.

United American Bosch Magmotor

"Magmotor" is a trade name for a dynamotor to be used for supplying "B" power to motor-car radio receivers, eliminating "B" batteries. This unit is operated from the car battery and does not place an excessive drain on the battery. The general scheme of this device comprises a low-voltage winding with commutator and brushes for rotating an armature in the field of a permanent "U" magnet when connected to the six-volt storage battery; a high-voltage winding in the same slots with the low-voltage winding; a commutator and brushes for collecting the "B" current generated in this latter winding; a filter condenser on the low-voltage side for controlling the radiation of "noise energy"; a filter of resistors and condensers on the high-voltage side for controlling "noise energy" and for minimizing ripple; a suitable base-plate with mounting brackets and a cover or housing of the "umbrella" type. The generating unit is supported between rubber cushions when the cover is in place.

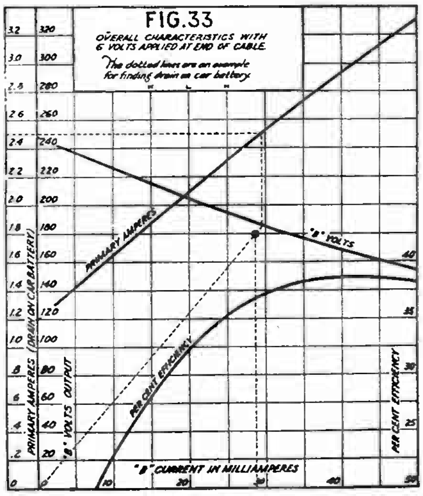
FIG.33

Characteristics of the Magmotor with 6 volts applied.

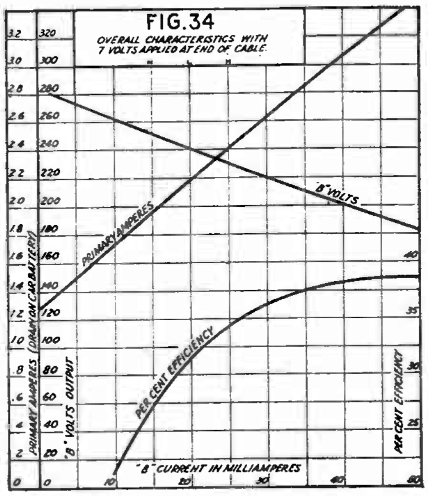
FIG.34

Characteristics of the Magmotor with 7 volts applied.

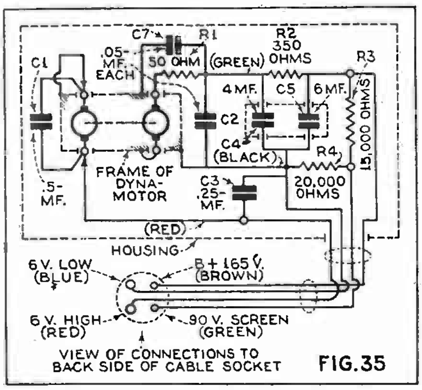

FIG.35

Complete schematic circuit of the Magmotor.

The armature runs in ball bearings held in end plates which close the die-cast frame. The frame carries the pole shoes and the brush holders. Screwed to the pole shoes (the iron on which the field is wound) is the permanent magnet which lies horizontally, rather than vertically, thus conserving space. The filter unit is disposed in the housing at one end of the generating unit.

Installation may be made in any convenient location on the car near the radio set, provided it is not subjected to splashing mud and water. Either the motor side, or the driver's side of the body bulkhead may afford space for mounting. Disposition may also be made under the front seat in some cases. The location is limited only by the length of the Magmotor cable. This may not be increased on account of the resistance of the leads. The Magmotor must always be installed so that its mounting plates forms a bottom for the cover box; otherwise it may shake out of its rubber cushions and short its brushes. This shorting may cause serious damage.

Four bolts are attached to the mounting brackets for use in fastening the Magmotor to vertical surfaces. If it is installed under the front seat, it need not be fastened, but it is well to lay it on a felt pad or piece of carpet to isolate it from the floor boards.

The application of this device is governed largely by the total filament drain of the receiver, speaker field, and Magmotor upon the car battery and the "B" drain of the receiver upon the Magmotor.

The charts on Figs. 32, 33 and 34, may be used to determine the approximate drain of the Magmotor upon the car battery. To do this proceed as follows:

(a) The "B" voltage and "B" current in milliamperes of the receiver to be used with the Magmotor must be known.

(b) Locate the intersection of two lines, viz., the horizontal line through the rated "B" voltage found on the left margin and the vertical line through the rated "B" current on the bottom margin.


Fig. E
Photograph of the Magmotor.

(c) Project a line through the intersection just found and the lower left corner of the chart.

(d) From a point where this line intersects the graph marked "B" voltage, follow a horizontal line to the left margin and read the amperes drain on the car battery.

When the Magmotor is used, care must be taken to install a ¼ mf. (or larger) non-inductive foil condenser between "B+" and "—B" in the receiver, providing it is not already there. The same precaution may be necessary between the screen-grid supply line and "—B."

The Magmotor is designed for use with receivers having the "—B" grounded. With receivers having other circuit arrangements, additional filtering, consisting of a series coil and shunt condenser to ground from the "—B" lead, may be needed. **The Magmotor cannot be used with receivers having "Push-Push" (class B) power amplification.**

Where the total drain of the receiver, speaker and Magmotor, does not exceed the surplus discharge rate of the battery, application can be safely made. Of course, if other electrical apparatus already installed upon the car demands this surplus charging rate, then choice should be made between the electrical apparatus desired and the risk of unsatisfactory operation due to excessive battery drain.

The Magmotor BD-6-180-Ed.1 differs from all competing apparatus of the rotating type in that its field is supplied by a permanent "U" magnet. No current for field excitation is necessary. This effects economy in the drain on the car battery and assists in raising the efficiency of the Magmotor above that of competitive devices of similar output.

The Magmotor is simple. It consists of three major assemblies:

(a) The generating unit, small, light, compact, dust- and moisture-proof, with no rotating parts exposed, which is easily removable from the base-plate by unclipping three wires.

(b) The base-plate with mounting brackets, filter unit, and connecting cable.

(c) The "umbrella" type cover box which fits down over the base-plate completely protecting the generating unit and filter from mechanical injury and from dust and dripping water.

The wiring diagram of this device is shown in Fig. 35, and a photograph in Fig. E.

The Emerson "B" Power Unit

The unit to be described is a very compact one (the overall dimensions being 7¾ x 6 x 8⅞ inches) consisting of a dynamotor and filter mounted on a steel base-plate. The entire unit is protected by a removable metal cover. The unit requires the same space as a set of three "B" batteries; in fact, it is designed to fit into the standard "B" battery box. It is designed to operated from the standard battery used in the car, and consumes but 2 amperes; its output is 180 volts at 40 ma.

It is equipped with a suitable filter so as to both smooth the output and prevent the pickup of stray noises originating in the car. The completed unit is mounted in the "B" battery box and fastened securely with bolts; or if there is no battery box, it may be mounted in any convenient place under the floor boards or in the body of the car. **Do not mount under the hood.** The unit is assembled for mounting with its base-plate down. If it is mounted in a suspended or side wall position, the two screws in the clamping strap on the dynamotor should be loosened and the dynamotor turned until the oil holes are at the top. The two screws should then be fastened.

Use shielded rubber-covered wire for connections; No. 14 or 16 being suitable for ground and battery leads and No. 18 or 20, or the regular "B" leads from the radio, for the "B" connection. The shielding on all leads should end a few inches from the case of the unit and should be grounded to the chassis at this point with copper braid or ribbon. The lead should be left long enough to permit the removal of the unit from the case without cutting the lead. All leads should be brought through the rubber bushing in the case and connected to the terminal plate as marked.

It is necessary to determine which side of the storage battery is grounded so that the corresponding leads from the terminal plate to the radio-control switch may be connected. It is absolutely essential that a good connection be made between the "ground" connection on the unit and the chassis of the car.

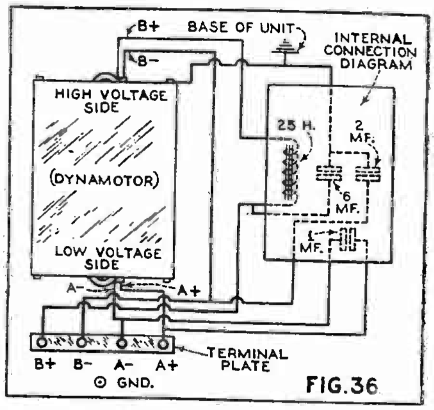

FIG. 36

Schematic circuit of the Emerson power unit.

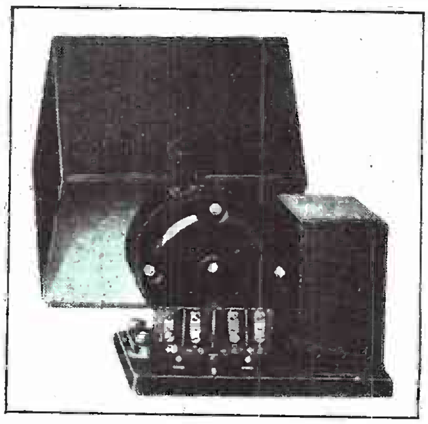

Fig. F

Photograph of the Emerson unit.

Figure 36 is a wiring diagram of the dynamotor and filter system, and Fig. F is a photograph.

In certain automotive receivers only 135 volts of "B" potential is required. In such cases it is necessary to place a resistor in series with the "B" of the power unit. The size resistor may easily be computed if the "B" current drain of the receiver is known. This may easily be determined by connecting the receiver to a set of "B' batteries and measuring the current consumed. The size resistor may then be computed from the formula

$$R = \frac{180 - \text{(rated voltage of set)}}{\text{"B" current drain}}$$

Pines "B" Battery Eliminator

The Pines "B" battery eliminator for automobile radio is designed to insure constant high voltage for the operation of a radio set in an automobile, bus, airplane or home.

It consists of a motor in combination with a rotary transformer. It receives its operating current from the regular "A" battery, which, through the medium of a rotary transformer, is stepped up to the required high A.C. voltage, rectified, and filtered through a filter pack which is self-contained in the eliminator, and delivers a smooth D.C. voltage to the radio set.

This eliminator is made in two types; one (No. 6331) whose output voltage is 135 at 30 ma., and the second (No. 6332) whose output is 180 volts at 30 ma. Fig. 37 shows the relation between voltage output, current consumed by the storage battery, and efficiency compared with the current drain of the receiver. As may readily be seen, the voltage output drops uniformly from 230 volts with a current drain of 5 ma. to 155 volts with a current drain of 50 ma. It is seen that the output voltage is about 180 volts with a current drain of 30 ma. With this latter value of current 2.5 amperes are drawn from the car battery and the efficiency is 38%. Fig. 38 is a wiring diagram of the unit and filter system. Fig. G is an internal and Fig. H is an external view of the device.

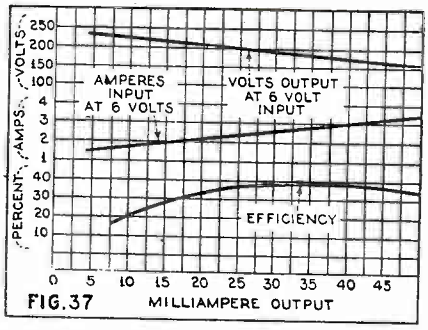

FIG. 37

Characteristics of the Pines power unit.

The Dynatrope

The "Dynatrope" is a rotary converter, which permits the playing of standard A.C. household midget radios in automobiles, boats, or wherever a 6-volt source of supply is available.

In designing any converter suitable for automotive radio use, three factors must be considered. First, to change the direction of D.C. input voltage without ever breaking the circuit. Second, to maintain constant speed even though the input voltage changes considerably. Third, to keep the output voltage, under varying loads, as constant as possible.

To cope with the first problem it was necessary to use an especially designed chopper for breaking up the input D.C., in conjunction with the center tap primary winding on a transformer. This chopper is com-

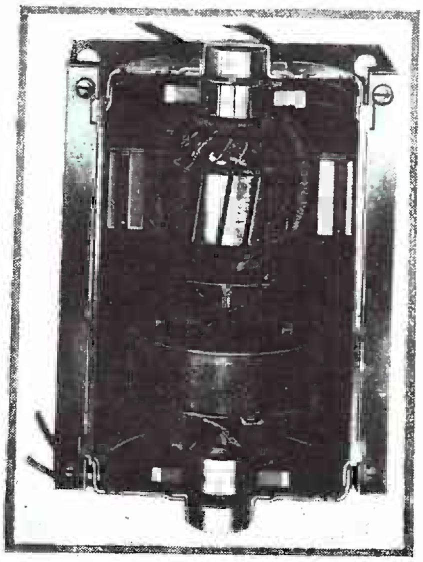

Fig. G

Detail view of the Pines power unit (internal).

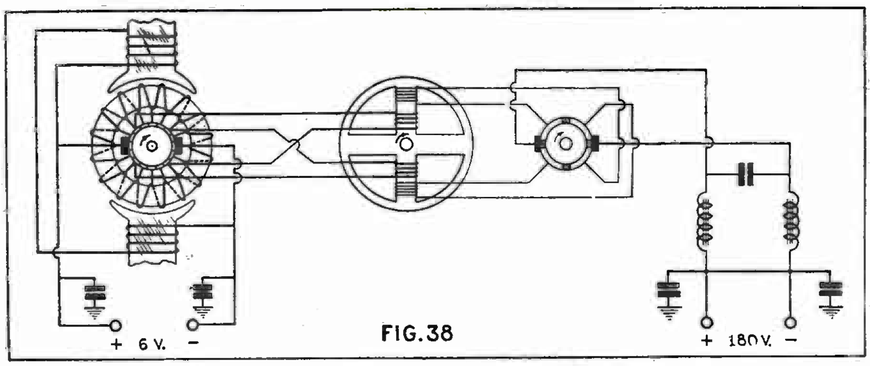

FIG.38

Detail schematic circuit of the Pines "B" power unit.

posed of sixteen alternate sized bars, the wide or main bars being connected direct to collector rings on each side of the chopper, four alternate main bars to each side. The eight remaining narrow bars connect through resistors to the main bars, the amount of resistance depending solely on the amount of current to be carried.

For instance, the "Dynatrope" under 110 volts, A.C. 60-watt output load, with 5.8-volts D.C. input, has a voltage drop between the main feed bar and the resistance coupled bar of 1.0-volt. Under these conditions it can be seen that as the feed brush passes from the main bar to the resistance coupled bar, the current change in the transformer windings is proportional to the value of the resistances used. Now as the chopper moves under brush, a main bar connected to the opposite end of the primary winding is coming in to take the maximum current load from the feed brush. This occurs before the previous resistance coupled bar leaves.

Consequently, the predominating current now flows through this half of the primary in the opposite direction, reversing the direction of the current flow in the half that is still connected, through a resistance, to the feed brush. It is at this time that the resistance coupled bar leaves the brush. In this way the circuit is never completely broken, and arcing is eliminated. Fig. 39 shows a diagram of connections of a unit, Fig. 40 an end view of the commutator and Fig. 41 the wave form of the various currents and voltages throughout the system.

The drive which was adapted for this chopper is a 2200 R.P.M. shunt wound motor geared for 900 R.P.M. and has a current consumption of 1 ampere at 6 volts. Due to the fact that this motor is practically running under no load, the chopper speed will not vary 10% with a voltage change from 5½ to 6½ volts. Fig. I shows the location of the "Dynatrope" in a typical motor car installation.

As may be seen by reference to the photograph, the best location for this unit is under the motor hood bolted to the cowl; in some cars it may be necessary to place it elsewhere, but in any case the shortest distance between battery, switch and converter will give best results.

This converter will handle any A.C. standard 110-120 volt radio that consumes from 40 to 80 watts. Care should be taken that No. 16 (or greater) wire must be used from the "Dynatrope" to the radio receiver.

The Esco Dyna—B

The Electric Specialty Co. has produced a small neat unit that is certainly worthy of consideration. It is a complete power unit consisting of a dynamotor, filter and voltage divider all constructed and enclosed in a compact metal case. This case measures 7⅞ inches x 7⅛ inches x 4½ inches—the size of the average single heavy-duty 45-volt "B" battery. The unit may be mounted either in a flat position such as under a seat, or in an upright position as behind a seat or in a parcel compartment.

The laminated frame and armature core are made of annealed steel punchings. The bearings may either be wool packed or of the ball bearing type, as desired. The unit comes equipped and ready to install. Eight feet of double, shielded and insulated wire is supplied for connection to the car battery. The unit is also equipped with a switch that enables the starting and stopping of the dynamotor at will. This switch may, of course, be installed on the dash board, or if so desired, controlled by the radio switch.

Fig. H

Photograph of the Pines unit, closed, ready for operation.

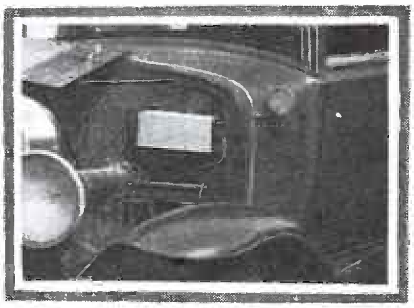

Fig. I

Note the rather unusual location of this unit.

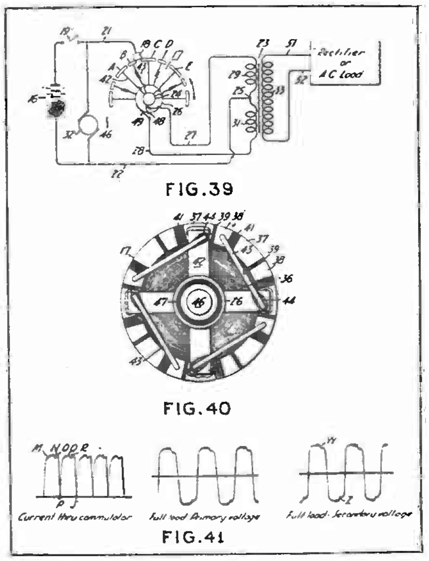

FIG.39

FIG.40

FIG.41

Sketches illustrating the unique method of operation of the Dynatrope.

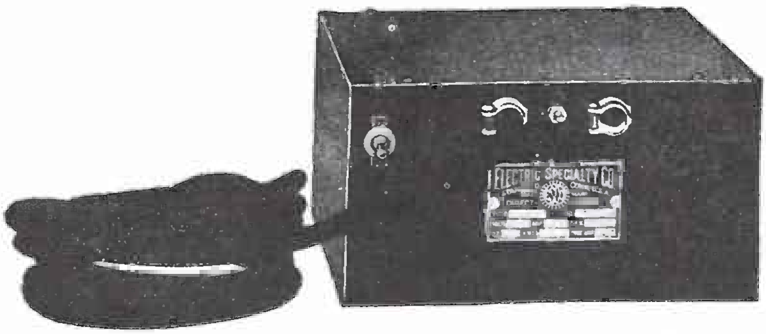

Here is a photograph of the Esco power unit that takes but a minimum of space.

These units may supply either 135, 180 or 200 volts. The current output is rated at 40 ma. and easily meets the requirements of the average radio receiver. These units are available in six different sizes, depending upon the requirements.

Primary Voltage	Secondary Voltage	Type
6.3	135	D1
12.5	135	D2
32	135	D3
6.3	180	D4
12.3	180	D5
32	180	D6

For auto-radio work, the input to the device is 6 volts. This feeds into the dynamotor which rotates between the field poles which is excited by the car battery. The secondary or high-voltage winding also rotates on the same shaft as the armature. The diagram of connections of this unit is shown in Fig. 42. This unit is shipped with filter connected as shown by the lower figure. It is the best connection for use with Bosch, Atwater-Kent, Philco and Sparton receivers. For some sets such as the Majestic better results may be secured by removing the red lead connected to "—B" and placing a wire between "—A" and "—B". This latter connection is shown below. A photograph is shown above.

U. S. Electric Works

The type T Genemotor is suitable for use in automobiles for supplying "B" voltage to radio receivers. It is used with Philco-Transitone and all similar type sets where "C" bias is taken from the "—B" to the ground. It is rated at 180 volts at 35 ma. drain with 6 volts input. When installing the Genemotor, it is absolutely necessary to have not less than 6 volts at the Genemotor terminal block.

The common ground connection is to the "A" when the positive terminal of the battery is grounded, and to the negative terminal when the negative side of the battery is grounded. The correct polarity may be determined from the chart given elsewhere in this book. If the "A" battery terminals are reversed, this automatically reverses the polarity of the "B" supply. A chemical paste-type condenser (electrolytic) is used across the "B" supply, and when the polarity is reversed, this condenser becomes short-circuited; when allowed to operate in this manner for a little while, the condenser becomes defective.

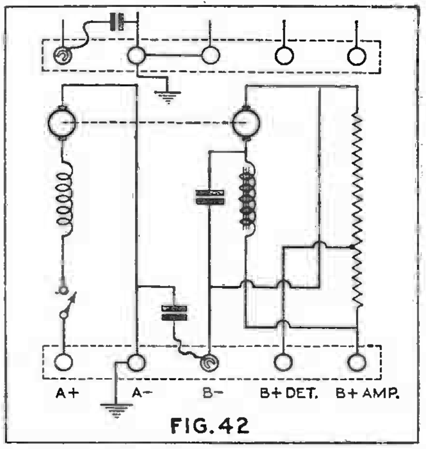

FIG. 42

Schematic circuit of the Esco power unit.

This unit may be mounted almost anywhere, but it is advisable to mount it as close to the control switch as possible. Do not mount it on the side or end—be sure that the motor is horizontal, that is. with the base up or down. The "hot" "A" line to the motor must come through the radio control switch so the switch controls both the Genemotor and the radio set.

It is recommended that the leads to the motor from the "A" battery be no less than No. 12 B&S wire. All wires to the unit must be shielded and well bonded (connected); the shielding should be grounded to the chassis of the car in as many places as possible—every 6 inches if convenient. A diagram of the Genemotor is given in Fig. 43.

As may be seen by reference to the figure, the unit consists of a separate motor and generator unit. A 1 mf. condenser across the 6-volt line bypasses any interference that might exist there. At the output of the generator, a suitable filter is provided which will minimize any ripple due to the commutator segments. A sketch of the terminal block is also shown in the same illustration.

Performance characteristics of the Genemotor is given below.

INPUT

volts	amps.	watts	volts
6	1.5	9.0	200
6	1.7	10.2	195
6	1.85	11.1	190
6	2.05	12.3	185
6	2.2	13.2	178

OUTPUT		EFF.	REG.
amps.	watts		
.020	4.0	44.4	.98
.025	4.875	47.99	.91
.0030	5.7	51.35	.89
.035	6.475	52.64	.86
.040	7.12	53.86	.83

Janette "Auto-B-Power"

The Janette "Auto-B-Power" consists of a rotary converter mounted, together with a suitable filter, in a splash-proof steel box. They are obtainable in four types, all operating from the battery supply of the car. The first type delivers 135 volts; the second, 180 volts; the third, 135 volts (from a 12-volt battery); and the fourth, 180 volts (from a 12-volt battery). With receivers drawing 25, 40 and 50 ma., the battery drain of these units are respectively 2.3, 2.8 and 3.0 A.; 2.5, 3.0, and 3.5 A.; 1.15, 1.4, and 1.5 A.; 1.25, 1.5, and 1.75 A.

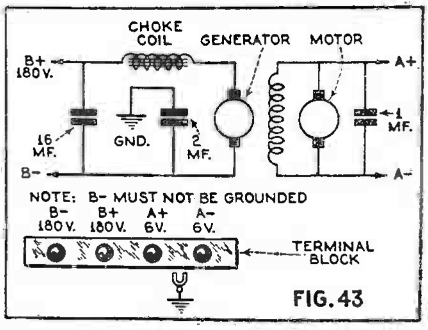

FIG. 43

Circuit arrangement of the Genemotor.

If so desired, a bleeder resistor may be obtained which, when connected across the output of the device, permits several lower voltages to be secured. The taps on this bleeder resistor are variable, so that the voltage may be adjusted for any set of conditions.

GENERAL CONSIDERATIONS

The descriptions of the various eliminators given above brings out some very pertinent facts. First, the physical location of the eliminator is subject to that stated by the manufacturer, although considerable leeway is allowed in some cases. Second, it is essential that the device be mounted horizontally, else end-play (axial movement of the rotating member) will result. Third, the grounded side of the car battery must be determined. Fourth, all leads to the eliminator must be shielded, and the shield thoroughly grounded. Fifth, all leads must be as short as possible.

In every case, a filter is included as part of the unit. This filter is perhaps the most important accessory of the device, insufficient filtering of the eliminator is sure to result in noisy reception, so that care must be taken to see that it is connected properly, if once removed.

After some time has elapsed, it is well to sandpaper the commutators and reseat the brushes or else sparking will take place; and sparking is one thing that will ruin a commutator. The noise that results when brushes are poorly seated cannot be eliminated by the filter, for it was not designed for that purpose. A Service Man may spend hours looking for noise when it is right where he least expects it. The moral is to examine the most likely places first, and then proceed to the more difficult.

Incidentally, advising the owner of a car radio and eliminator that it (the eliminator) needs looking over every three months might bring in additional business that might not be obtainable otherwise.

TEST EQUIPMENT

The test equipment necessary to service auto radio sets is the same as for home radio receivers. When a set is not functioning properly in the home, the Service Man usually calls, and if the repair is a minor one, fixes it then and there. If the job requires an hour's work, then the set is brought to the shop. In the case of an auto radio receiver, the customer almost invariably goes to the Service Man. If upon examination, the trouble is found in the set, then either the owner must leave the car or else the set must be removed from the car. Consequently, regardless of whether the receiver is designed for home or auto operation, the test equipment necessary is the same.

A desirable list of tools is given elsewhere in this book and therefore will not be repeated here. As for the electrical equipment, it may consist of the conventional R.F. oscillator, set analyzer and miscellaneous tools.

The R. F. Oscillator

An oscillator suitable for service work need not be extremely accurate. Fig. 44 shows in schematic form the electrical details of a simple one which is entirely suitable for radio work. The coil L1 is wound on a tube 2 inches in diameter, 30 turns on either side of the center-tap. The output may be controlled by the potentiometer R2. The resistor R1 is fixed, but varying its value changes the pitch of the note. It is designed to cover the band from 500 to 1500 kc.

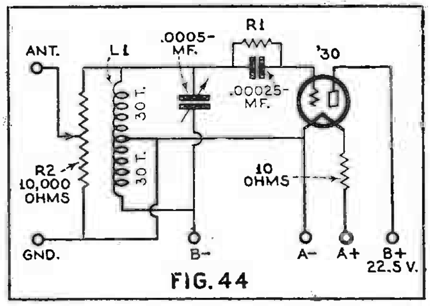

FIG. 44

Complete schematic circuit of a suitable oscillator.

An oscillator should be used whenever a steady broadcast signal is not available. Because the passages usually transmitted over the "air" vary considerably from moment to moment, it is advisable to use the oscillator for all tests except for a final or "quality" test.

In constructing the oscillator, it is advisable to completely shield the inside of the case and the antenna lead from the oscillator, else radiation from the oscillator itself will induce a voltage into parts of the receiver other than the antenna circuit.

Most Service Men already have set analyzers, and therefore it would be unwise to describe one at this time. A very wide selection is to be had in the open market at this time and Service Men, contemplating entering the auto radio field are requested to carefully study the market.

MISCELLANEOUS NOTES

The "B" batteries used in auto radio work are usually located in such a position as to make their leads as short as possible. Some men may place them close to the engine compartment; if this is done, the heat of the engine may be sufficient to ruin them. When the temperature of a dry battery rises above a certain value, its compound softens, the resistance of the cell rises and the battery is useless. It is imperative, therefore, that the batteries be located in such a position that their leads are short and their temperature will not rise excessively.

When "B" eliminators are used, the effects of temperature rises manifests itself in a decreased rating. It is significant that the rating of an electrical generator depends entirely upon the temperature and voltage regulation. If the regulation (fall of voltage from no-load to full-load) be disregarded, then the rating of a machine depends solely upon its temperature. In other words, if a machine has a rating of, say, 50 watts when used in New York City, it may have its rating safely increased to 150 watts when used in the North Pole. On the other hand, if it is brought down to the Torrid Zone, its safe rating may have to be decreased to 10 watts. Now if an eliminator (which is usually of the rotating machine type) is housed too close to the hottest part of the engine, its rating may be decreased to such an extent (even though its name-plate rating is the same) that its output voltage is reduced considerably.

Solving Auto-Radio Problems

NOW that the great American public is as much at home in the motor car as in the parlor, if not more so, the development of automobile radio as a commercial proposition is proceeding rapidly. While, hitherto, it has not been difficult to operate a portable radio from a car which had been parked, particularly where an aerial could be strung or a ground rod driven, the problem of operating a receiver from a car in motion was for years one for a most advanced experimenter. As in the case of airplane radio, it is complicated by the fact that an ignition system, capable of producing spark interference, is necessarily located in the immediate vicinity. And the car operator, too, is handicapped by the fact that the compactness of his quarters does not permit him the long trailing aerial of a plane.

The Stutz, Chrysler and Dodge makes of cars now carry this equipment as standard, and it is installed, optionally, on the Packard, Graham-Paige, Cadillac and LaSalle by the makers of the cars. Imported cars of European make are equipped at the plant of the Automobile Radio Corporation in New York City; and installations have been made at its branches throughout the country on cars of domestic manufacture.

The reproducer used in the installations is a magnetic cone, mounted above the windshield in closed cars, and under the instrument panel in open models. Limousine equipment necessitates two instruments, one front and one rear.

The "Transitone" System

The circuit, which is illustrated in Fig. 1. may at first glance seem disappointing in its simplicity; yet it represents the fruit of four years of engineering and experimental work. In fact, its simplicity is the keynote of its success (if the cliche may be utilized once more) under the trying conditions of operation which it must meet. The receiver has four tuned stages—three R.F. and a "non-regenerative" detector—with oscillation under control by the grid-suppressor method; followed by two stages of transformer-coupled audio amplification.

The tubes are of the battery-operated type, since the car affords an ample filament supply, ready at all times; "B" and "C" batteries are readily stored in the space beneath the front seats of the car. The '00A soft-detector is used, and a '12A power tube; the others are of the standard '01A type.

In order, however, that this set may operate with the greatest efficiency and the minimum of attention, an extraordinary degree of care is necessary to avoid undesired coupling effects. As illustrated in the views, the receiver, which is placed beneath the instrument panel of the car (slightly rearranged for the purpose) is completely shielded; its layout and wiring is a matter of great exactness, to prevent pick-ups, especially from the ignition system nearby.

In addition to this, the ignition system is very thoroughly equipped with interference filters. These filters, or suppressors, have no effect upon the operating conditions of the motors; while their proper connection is essential to operation. In the Stutz laboratories, it was found that their connection did not effect a change in motor speed of one revolution per minute.

Double tuning control has been found desirable, as shown in the illustration; each knob controls two ganged condensers. and

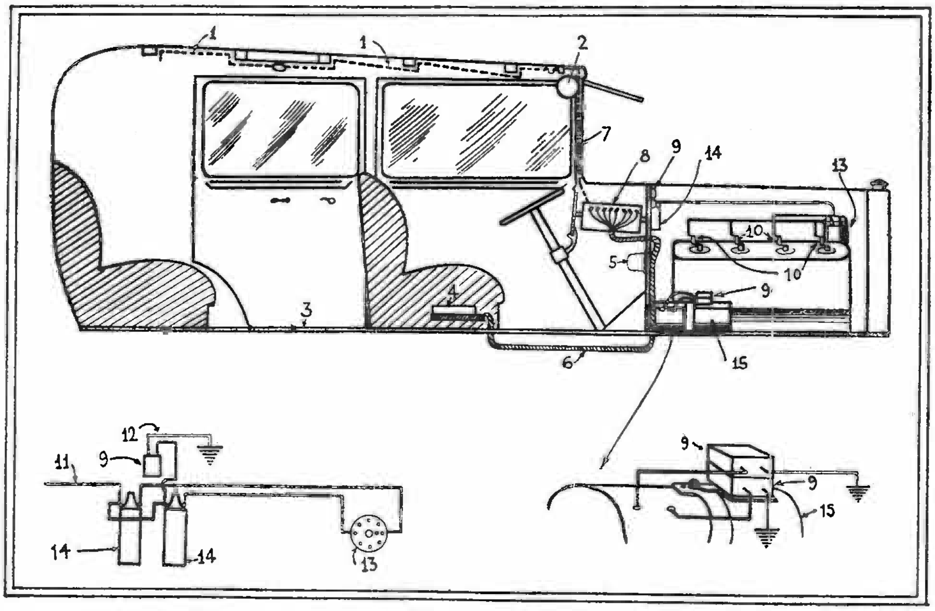

Fig. 2

The "Transitone" installation: 1, aerial; 2, reproducer; 3, car floor; 5, output filter; 7, aerial lead; 9, interference filter condensers; 12, "ground"; 13, distributor; 14 ignition coil; 15, generator. See illustrations below.

the dials will track very closely. The panel knobs are connected with the condenser shafts by flexible shafts. The volume is controlled by the R.F. filament rheostat. The set is turned on and off by the introduction of the master key.

Because the antenna system must be confined to the dimensions of the car, its size is limited. This problem has been met by constructing an aerial of wire netting in the top of the car (a folding top, in the case of an open car, when reception is obtained with the top either up or down). The "ground," or more properly counterpoise, since it is insulated from the earth, is the frame of the car. However, the external connections depend upon the make of car; therefore, their polarity is not shown in the schematic diagram. Where the positive side of the storage battery is "grounded," the "hot lead" must be taken from the negative side of the battery. If the negative side of the battery is grounded, the reverse is true. The 10-ampere fuse which protects the filament circuit of the receiver must always be in the "hot" side of the circuit, and insulated from the ground; while the filament switch is always in the "A+" lead of the receiver.

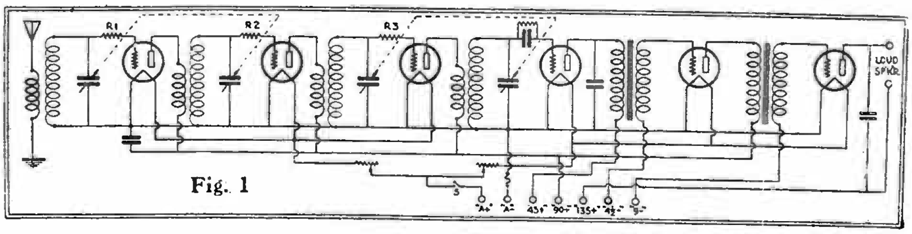

Fig. 1

The schematic circuit of the receiver illustrated below. The switch is S, the R.F. rheostat is a panel control for volume. The grid suppressors, R1-2-3, are 500, 3,000 and 100 ohms, respectively.

Interference Problems

The method of suppressing the radio-frequency disturbance caused by the car's ignition system, in the installations pictured here, is by placing a 25,000-ohm resistor in series with each spark plug. A similar resistor is placed in the high-tension lead between the coil and the distributor. The effect of this is to cause a quick damping of the oscillatory discharge which takes place across the gap of the spark plug.

In all types of ignition coils, a certain amount of "kick-back" voltage is induced in the primary winding by the high-tension side. This must be filtered out, to prevent it from feeding back to the storage battery and thence to the receiver. This is accomplished by placing a 1-mf. condenser between the battery terminal of the coil and ground. In cases where the ignition coil is mounted on the instrument panel, it is necessary to shield the high-tension, and the leads going to the breaker points, to the point where they pass through the engine partition.

SERVICING radio equipment in automobiles may be properly divided into two parts; first, the receiver and its accessory equipment; second, the method used to eliminate the disturbance caused by the electrical system in the car.

The Service Man must bear in mind that the operating conditions of radio equipment in an automobile are entirely different from those encountered in the home. For example, a receiver is installed in the owner's home, and reception in that particular locality is found to be poor. There are various measures that can be taken to offset this; such as lengthening the antenna or relocating it, or making additional ground connections. With the modern A.C.-operated sets in use, today, with four and five stages of radio-frequency amplification and high audio out-

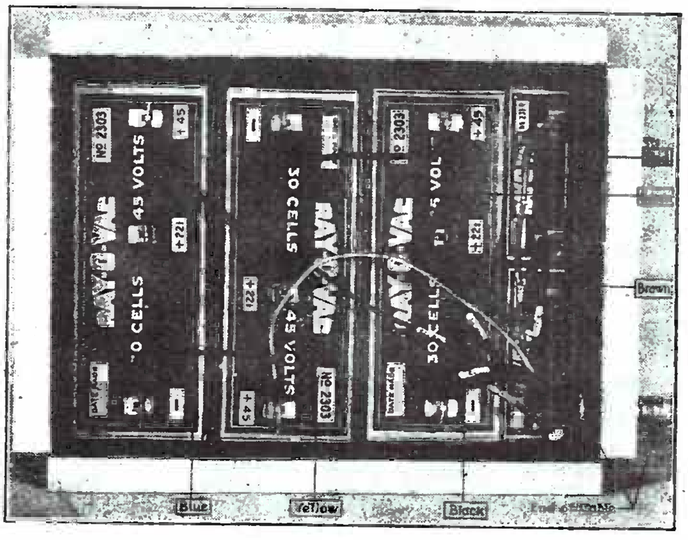

The carefully shielded "B" and "C" supply is pictured above. The battery leads are cabled through "BX" armored conduit; the color code being as indicated. These are 4 and 6 in Fig. 2, where the receiver is 8.

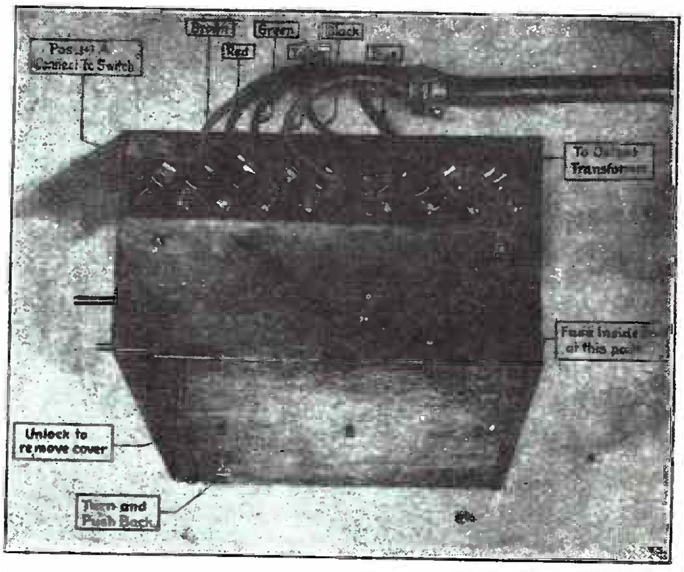

The unusual terminal-strip arrangement, necessary for an automobile receiver, is shown here; remember the tubes are mounted upside-down. The receiver is placed at 8 in Fig. 2.

put, there is always a certain surplus of power which can be used to build up a weak signal. None of these are available in an automobile installation.

The automobile will, in the course of a few hours' run, encounter receiving conditions that may range all the way down the scale from perfection to zero. The problem, then, is to have a set efficient enough to hold the signal under these varying conditions.

Because the available antenna space is confined to the physical dimensions of the car top, we cannot, very well, increase the size of our antenna. The additional inductance and capacity would only overload the circuit, without giving any additional pick-up. In place of a ground, we must utilize the metal chassis of the car as a counterpoise. The plate current, being drawn from dry-cell batteries, must be conserved. Space again enters the question, limiting the size and number of batteries that may be used. This leaves the whole burden of assuring reception, under all varying conditions, on the receiver itself. The instrument must also be small and compact, in order to be adaptable for installation in any make of car.

Care must be taken, in servicing this receiver, that the interior wiring is not disturbed. After assembling, all ganged circuits have been balanced at the factory within very narrow limits; and a slight change in the positions of the R.F. circuit wires might be sufficient to shift the resonance point of a stage and lower the over-all efficiency.

New Single-Control Model

A receiver known as Model "NR.109" has recently been developed by the Automobile Radio Corporation, to meet the demand for a single-control set. The complete receiver consists of two units; one contains the R.F. amplifiers, while the audio section is built into the second container. (These units are known as models "NR.107" and "NR.108," respectively). This model is used on all Chrysler cars which are radio-equipped at the factory. As several thousand cars are about to be equipped with this model, the following data will be of help to the Service Man.

The set is turned on by means of a key operating a switch, which is usually located at the right of the tuning control, and is very similar in appearance to an ignition switch; a quarter turn to the right turns on the set. When the set is not being used, the key should be removed, thus preventing tampering.

The tuning is done by merely rotating the one dial through 180 degrees, or half a revolution, to cover the entire wavelength range of the receiver.

The volume control, a knurled knob in the center of the tuning dial, operates independently of the dial. Turning in a clockwise direction increases volume and counterclockwise decreases volume.

General Test Data

If there is no signal or click from loud speaker when switch key is turned on and off, remove knurled knob holding cover of either box in place, and remove one cover. If tubes fail to light examine "A" battery connection. This is a wire leading from "Hot" or ungrounded side of starting battery to "B" battery compartment and connecting with "B" wire of set cable.

If "A" battery wire is intact and making good contact, and tubes still fail to light, examine plug connections on both set boxes and see that these are pushed together all the way. Examine key switch and be sure that there is a wire connected to each of the two terminals on rear of same.

If any one tube in the receiver does not light, replace with a tube of the same type as marked on the base of tube. The proper location of the tubes may be checked by referring to diagram.

If tubes light, but there is no click from the speaker, examine connections to "B" and "C" batteries in battery compartment. If all connections are in place corresponding with diagram (Fig. 1) test each battery with a voltmeter while the switch of set is turned *on*. When "B" batteries fall below 38-volts they should be replaced.

If batteries are good and all connections tight, and still there is no click from speaker, examine speaker connection to audio frequency unit. This is made by means of a plug inserted into a jack in the side of the audio or smaller box. The speaker may be checked by plugging another speaker into this jack, in place of the regular car speaker. If the external speaker functions, the trouble lies in the car speaker or its connecting wires.

The '71-A type tube must be in the proper socket in the audio or smaller box. If a tube of another type is placed in this socket, the receiver will not function.

If the set operates, but stations received are weak, test "B" batteries with set turned *on*. Check "C+" battery connection. If the negative side of starting battery is grounded to frame, the "C+" must be connected together with the "A— B—" lead from starting battery. Examine and test tubes to see if all are of proper type and of good characteristics.

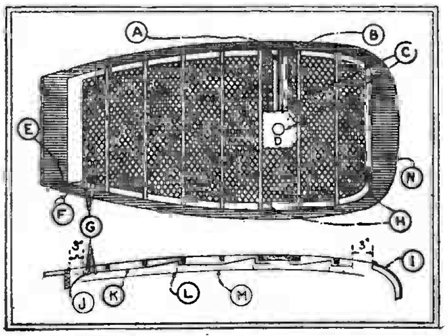

Fig. 3

A wire-mesh aerial K is used in sedans; the dome light D and its wires B must be shielded and spaced three inches from aerial, as at C. The lead-in F is connected at several points G, as shown in cross-section J. L, listing cloth, M, lining.

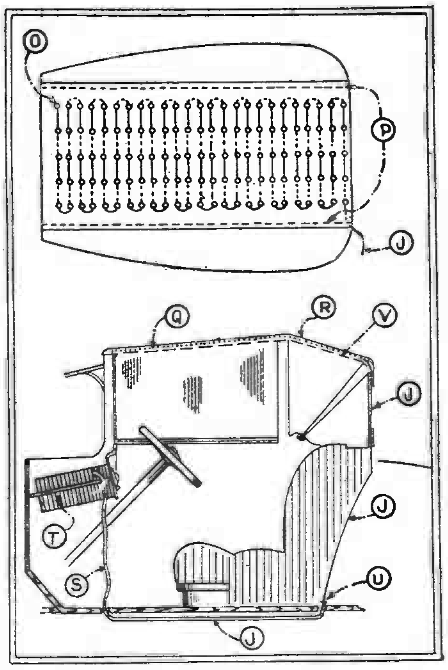

Fig. 4

Touring car antenna: J, lead-in; O, end of wire; R, top; V, lining; Q, cloth, supporting wire; P, flaps; S, lead-in shielding; U, heavy wire; T, receiver.

The tuned circuits in the larger (R.F.) amplifier may be out of balance. This rarely occurs, but is easily corrected. All four condenser rotors should be fully meshed with stators when the handle of dial is in extreme left position. If the rotors do not track together, set them by loosening setscrews holding them to shaft; and, when re-set, again tighten setscrews. Now tune

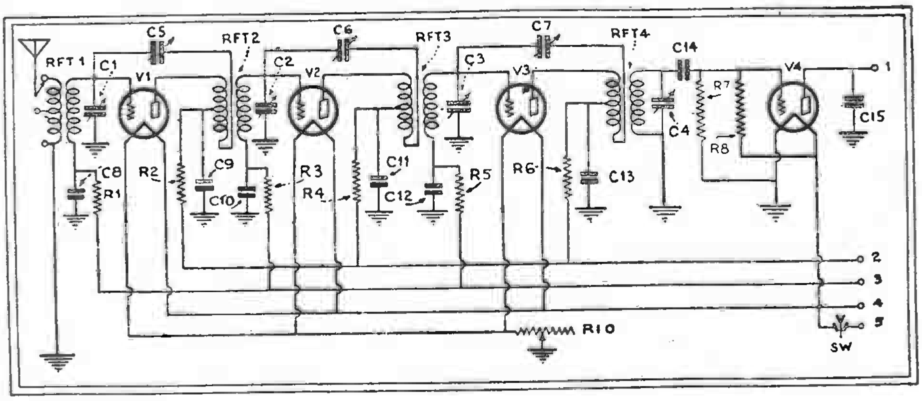

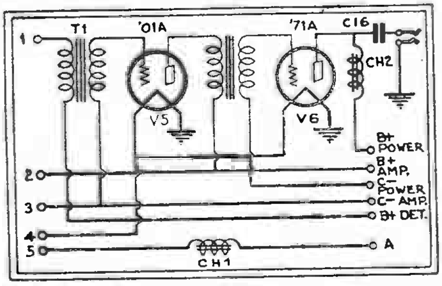

Fig. 2

"Model NR. 107" tuning unit, left; "Model NR. 108" amplifier above. Either R7 or R8, or both, may be used. Observe resistance-capacity filters in grid and plate leads. Part values are not given.

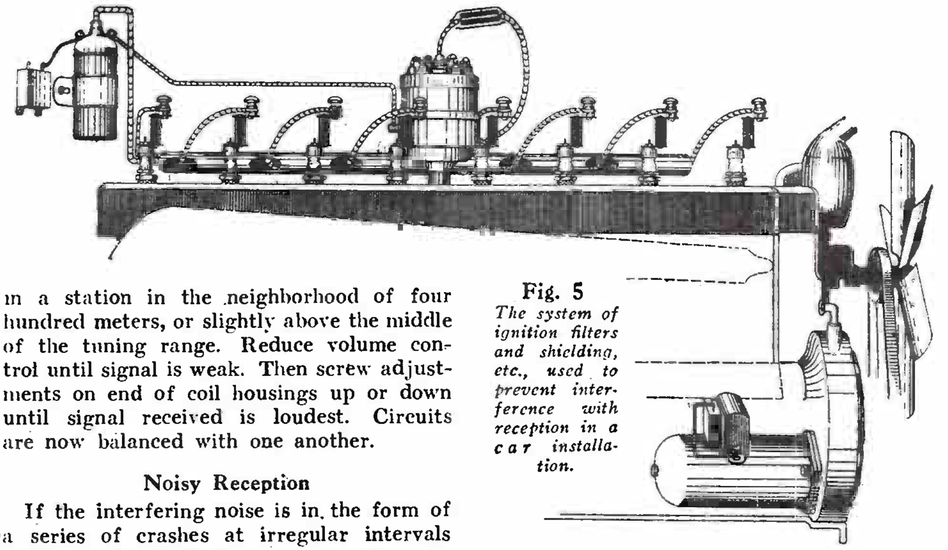

Fig. 5

The system of ignition filters and shielding, etc., used to prevent interference with reception in a car installation.

in a station in the neighborhood of four hundred meters, or slightly above the middle of the tuning range. Reduce volume control until signal is weak. Then screw adjustments on end of coil housings up or down until signal received is loudest. Circuits are now balanced with one another.

Noisy Reception

If the interfering noise is in the form of a series of crashes at irregular intervals persisting in all localities—even when the automobile is standing still—it is probably caused by atmospheric disturbances, commonly known as "static." This form of disturbance is most common during the summer and in unseasonable hot weather.

If the noise is a continuous crackle or roar which is loudest on the lower wavelengths (that is, with the stem of the tuning dial to the right) it is probably caused by local electrical disturbances, such as electric motors, power lines, etc. Driving to a location away from overhead wires should cause this interference to disappear. If the noise is noticeable only at night, when the car lights are lit, it may be caused by a loose bulb or dirty contact in a socket.

If the noise persists, even when the volume control is turned completely off, it may be caused by either a loose or dirty plug connection in the cables, a tube with dirty contact prongs, or a noisy battery.

The batteries may be tested for noise by connecting the terminals of a pair of telephones across each battery and listening for any crackling or hissing. Any noisy battery should be replaced. Care should also be taken to see that no moisture enters the battery compartment.

If there is noise or crackling, heard only when the car is being driven, but which disappears when the car is motionless, it is probably caused by dirty tube contacts. It is a good plan to remove each tube and clean the ends of the contact prongs with fine sandpaper. The surfaces of the tube-socket contact springs may also be cleaned this way.

Two types of antenna are used in Transitone installations. In sedan models a copper mesh is used; for touring, roadster models and all cars with folding tops, a very efficient antenna of flexible construction has been developed. (See Figs. 3 and 4.)

The plate and grid batteries are placed in a waterproof metal box, which is generally suspended through the floor boards in the rear of the car. In coupé and roadster models, the batteries can be reached by raising the back deck of the car.

Applying the same law again we find it is important to keep all high tension wires and the lead between the breaker points and the primary side of the coil away from other wires of the system. The high tension conductors and other wires carrying this interrupted current create a rapidly changing magnetic field around them. Any wires of the lighting system coming within range of this field will carry the induced current back to all parts of the system.

Another source of disturbance is the generator. This is very easily remedied by placing a 1-mf. by-pass condenser across the output. In order to secure clear reception, *it is necessary to keep the electrical system of the car in good order.* Defective spark plugs, dirty or improperly adjusted breaker points will tend to cause interference. Faulty generator brushes and uneven commutator segments will also cause trouble.

Trouble Shooting

The following points may help in locating the source of disturbance when trouble is experienced from ignition interference.

Detune the set; if this does not reduce the level of the interference, then it is not coming in through the antenna, but being fed through the battery wires. Most disturbances of this nature may be traced to the following causes: (a) Generator commutator; (b) Worn brushes; (c) Worn breaker points, or lack of adjustment on same.

When detuning the set reduces the level of the disturbance, then high-tension radiation is being picked up by the antenna. This may be due to any one of various causes:

(a) Inspect all high-tension wires, and make sure that all fit tightly in their respective bushings in the distributor head.

(b) Test all spark suppressors for voltage drop; replace anywhere the resistance is too low.

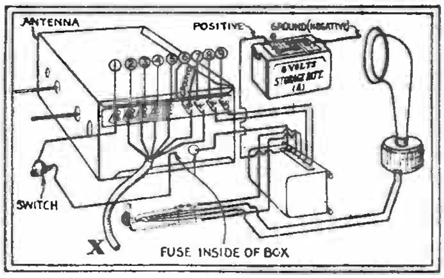

Fig. 6

Outside connections of the installation described last month, in which the audio output transformer and "A" filter are combined in the unit shown under the "A" battery.

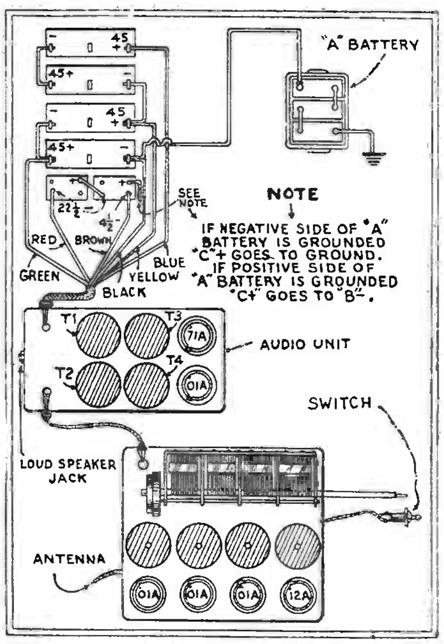

Fig. 1

Installation of the Model "NR-109" Transitone, employing the circuit of Fig. 2. Voltages have been increased and a '71A power tube introduced.

(c) Inspect the by-pass condenser on the ignition coil. Flash it with a 45-volt "B" battery. (Make sure it is on battery side of coil.)

(d) Remove any battery, horn, or other low-tension wires from the vicinity of the high-tension field.

(e) In cars where the ignition coil is mounted on the instrument panel, see if the shielding on the high-tension side is grounded. In Packard cars equipped with "Transitone" receivers, the coil is completely shielded in a copper can. Cars of Chrysler make also use the "Electro-Lock" cable between the ignition switch on the instrument panel and the distributor. This cable must be shielded with Belden braid, and the shield grounded to the metal collars at both ends of the cable.

(f) Try placing a 1-mf. by-pass condenser across the various electrical instruments on the panel: namely, the ammeter, electric gasoline gauge, lighting and ignition switches, or cigar lighter. If this procedure is carefully followed out, no difficulty should be experienced in finding the source of trouble and eliminating it. The accessibility of all connections in the simple circuit makes voltage tests and trouble shooting easy.

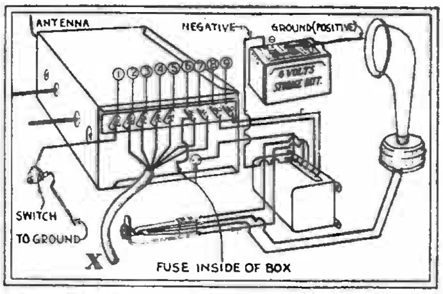

Fig. 7

Note similarity to Fig. 6, opposite. The differences are in the filament-circuit fuse and "A" connections, which vary with different makes of cars, as previously explained.

Automotive Radio Receivers of 1930

THE PILOT AUTOMOBILE RECEIVER AFFORDS GREATER CONVENIENCE

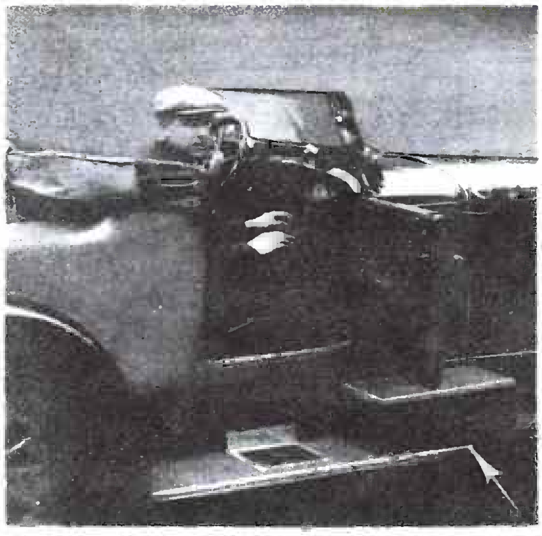

Fig. A

The Pilot automotive receiver installed unobtrusively (in the box in the lower right-hand corner) on the right running board of a Hudson roadster.

The receiver, located as shown (above arrow), does not interfere with the opening of the door of the car. It is no trouble to get at it when desired. In this installation, the control box is fastened to the right-hand side of the car, above the set; and the speaker is underneath the dashboard.

PRACTICALLY all of the automobile radio receivers which have appeared in such numbers during the last several months, have been for mounting somewhere inside the car, usually behind the instrument board. However, a motorcar receiver placed on the market by the Pilot Radio & Tube Corporation, of Lawrence, Mass., is designed for placement on the running board; while by means of its six-foot flexible cable, the attached control box may be placed anywhere inside the machine. One great advantage of this arrangement is that the receiver is instantly accessible for inspection and repair, as may be seen in Fig. A.

The Pilot auto set differs from other receivers of this class also in the absence of provisions for the elimination of ignition interference. It is the manufacturer's belief that automobile radio receivers should be used only when the car is stationary, and that they should not be turned on to distract the driver's attention while the car is in motion.

The new receiver is supplied in kit form, and may be assembled, wired and installed in a short time. The Service Man and custom set builder who can sell automotive radio sets to their customers will do well to consider this outfit, as its price is low.

The receiver proper, which is built on a formed and drilled aluminum chassis, comprises three screen-grid ('24 type) stages of T.R.F., a screen-grid detector, and two A.F. stages. Tubes of the A.C. type are used throughout, with their filaments wired in series-parallel to work from the regular six-volt storage battery in the car. The '45 output tube, commonly used with 250 volts for the plate and 50 for the grid, is operated in this set with 135 and $22\frac{1}{2}$ volts, respectively, and produces highly satisfactory results; it is much more convenient than a '71A in this particular circuit, because of its $2\frac{1}{2}$-volt filament, working in series with the '27. The total filament drain is four amperes; the plate current drain 20 milliamperes. The circuit is shown in Fig. 1.

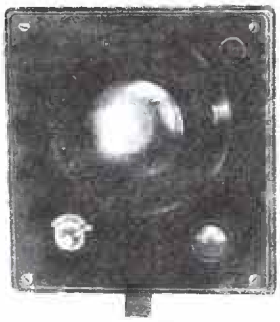

Fig. C

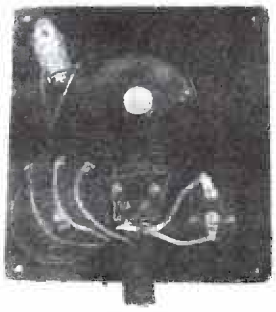

Fig. D

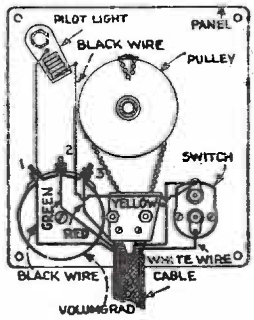

Fig. 2

The control box of the Pilot automotive receiver may be mounted anywhere in the car, where the driving cable can be run. Its front and rear are illustrated here; the connections and colors at the right.

The sensitivity, selectivity and tone quality of the outfit leave little to be desired. Mechanically, both chassis and control apparatus are very sturdy and will last indefinitely. The set has been tested very thoroughly in a number of different cars, representing different price classes and body types, and all the weak points which showed up during thousands of miles' driving have been eliminated.

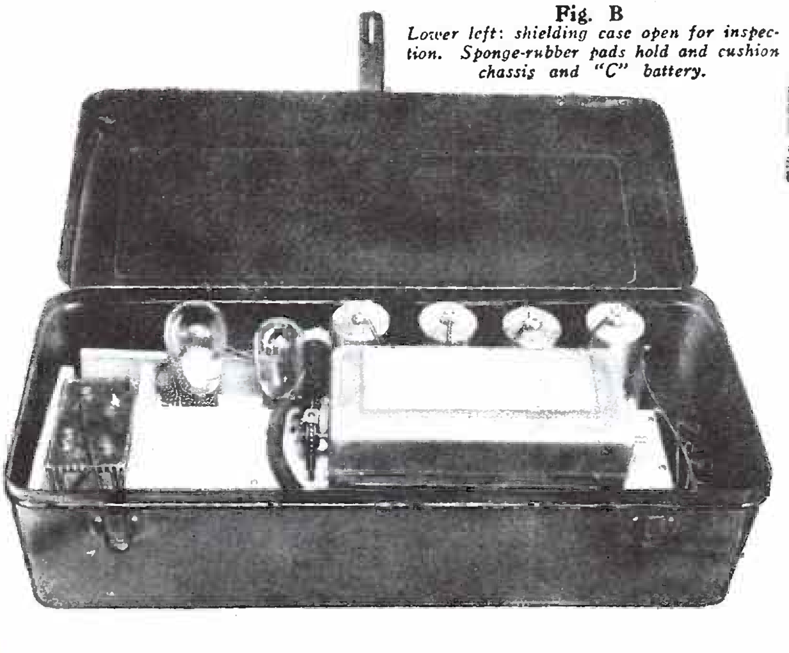

Fig. B

Lower left: shielding case open for inspection. Sponge-rubber pads hold and cushion chassis and "C" battery.

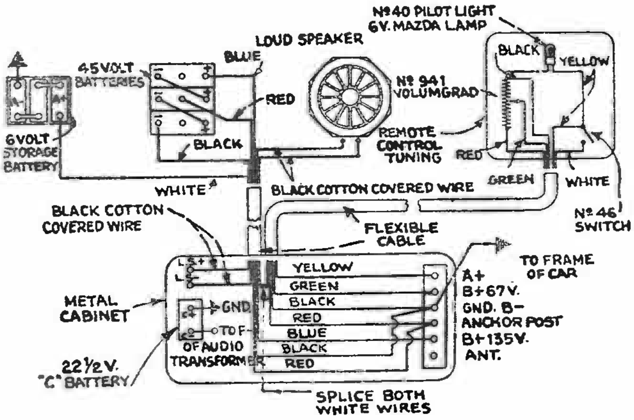

Fig. 3

(*Above*)

Wiring arrangement and code of Pilot set illustrated at left.

Control Connections

The receiver unit is contained in a black japanned steel case (Fig. B) which goes on the running board, and is controlled from

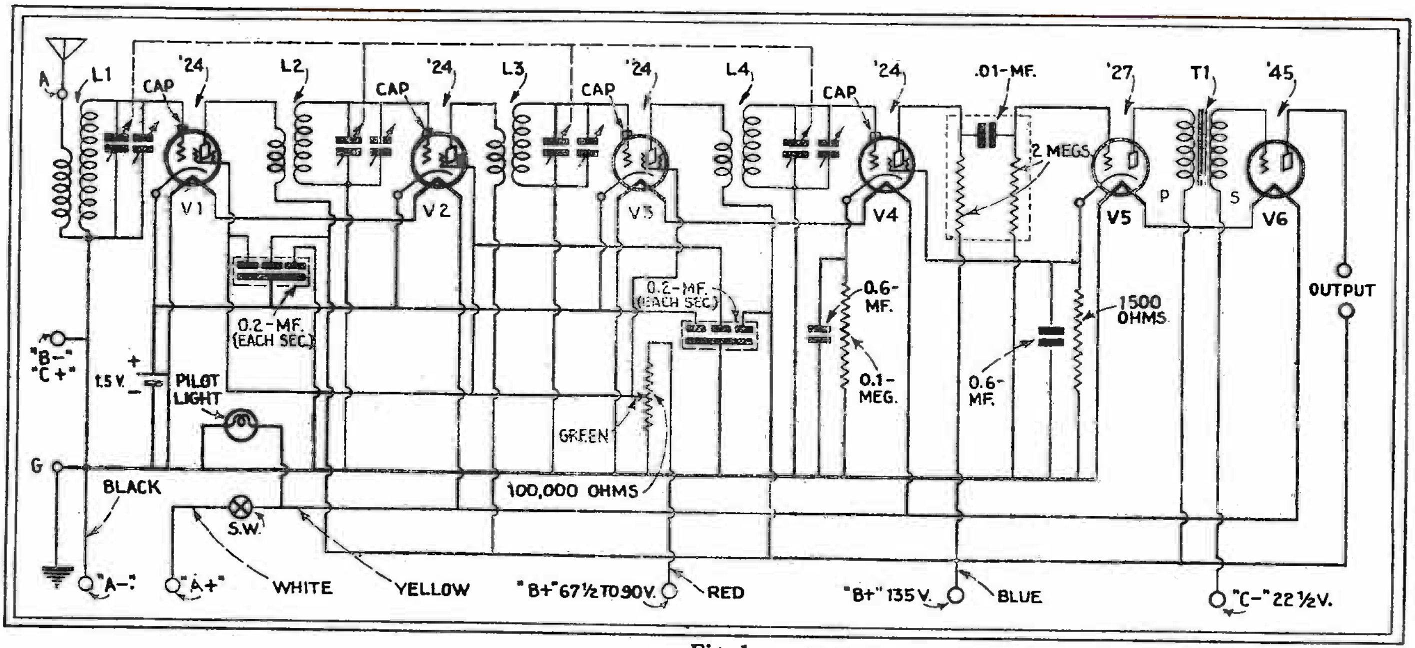

Fig. 1

Circuit of the Pilot automotive radio receiver, with three stages of screen-grid R.F. amplification, screen-grid detector, resistance-coupled '27 first audio, and a '45 power tube, in place of the '12 commonly used; its use improves output and simplifies the circuit.

the inside of the car by means of a thick flexible cable which terminates at a small panel (Fig. C) on which are mounted the tuning dial, a filament switch, a volume control and a pilot light. In the cable are five wires for the connections of the electrical devices, and a pair of flexible metal tubes; these last carry lengths of brass chain which transmit the motion of the control dial to the shaft of the variable condenser gang on the chassis. Special fixtures to guide the chain and make it run smoothly are provided. Its ends are secured to molded bakelite pulleys, one on the dial and the other on the condenser. The wires and tubes are enclosed in a strong waterproof fabric sheath. (See Fig. D and Fig. 2 for details of the control box.)

The steel case is 22 inches long, 8 inches wide and 6⅞ inches high and, when placed on the running board, will not interfere with opening the door of a car of, practically, any make. It may also be mounted in the rumble seat of a roadster or coupé.

The control box, molded in one piece of natural-color bakelite, is 6½ inches long, 5⅞ inches wide and 1¼ inches high; the front panel, on which the controls are placed, is also of bakelite. The box is fitted with a removable aluminum back-plate, by means of which the whole unit may readily be screwed down.

The cable leaves the receiver case through a hole in the back, passes through a hole cut in the step-plate, and reappears inside the car through another hole made in the floorboard. (In some cars it is not necessary to drill the floorboard; as there are already openings in it through which the cable may be "snaked"). Additional wires, passing through the same hole in the side of the car, lead to the storage battery, the "B" batteries and the loud speaker. The cable and the extra wires are sleeved by a short length of flexible metal hose, clamped to the back of the case; to prevent them from chafing against the edges of the hole in the step-plate, and possibly causing a short-circuit to ground.

The Pilot auto kit includes all the parts for the receiver itself, the steel case, the control cable and control panel, and wire and insulators for an under-car aerial. A special cone speaker, only 8⅞ inches in diameter and 3¾ inches thick, is supplied as a separate accessory.

No "B" battery container is furnished; since each car is an individual problem in this regard. The three 45-volt blocks required for the set may be slung under the rear floorboard of a closed car in a wood-and-metal container which the constructor can make himself; or they may be put under the rear set or in the luggage carrier. In roadsters and coupés, the rumble seat is convenient for the purpose. The wiring circuit is Fig. 3.

For an aerial, a length of wire is merely strung from insulators between the front and rear axles, under the car. This is easily and quickly installed, and works perfectly. It is unnecessary to tack unsightly copper screens to the inside of the car, or to disfigure the upholstery in any way.

The control panel may be mounted in any convenient place inside the car; the instrument board is the favorite spot, although in some cars it is just as handy to have it somewhere in the rear. In any event, the connecting control-cable should be kept as free of kinks as possible.

DELCO AUTOMOTIVE SET EMPLOYS GANGED VARIOMETERS

IN the Delco automotive radio receiver, in contrast to the accepted practice of recent years, tuning is accomplished by a gang of three variometers under single control, instead of three condensers; each is housed in a separate compartment, through which the tuning drive shaft passes. The latter, as usual, is connected to a tuning dial on the dash of the car, at the right of the instrument panel; there are also placed a key switch and volume control. The receiver chassis, with its separate controls and flexible cable, is illustrated externally in Fig. F, and the internal appearance in Fig. E; while the schematic circuit is Fig. 4.

The receiver, it will be noted, uses '24 type tubes in two R.F. stages and as a detector; with their filaments supplied, as

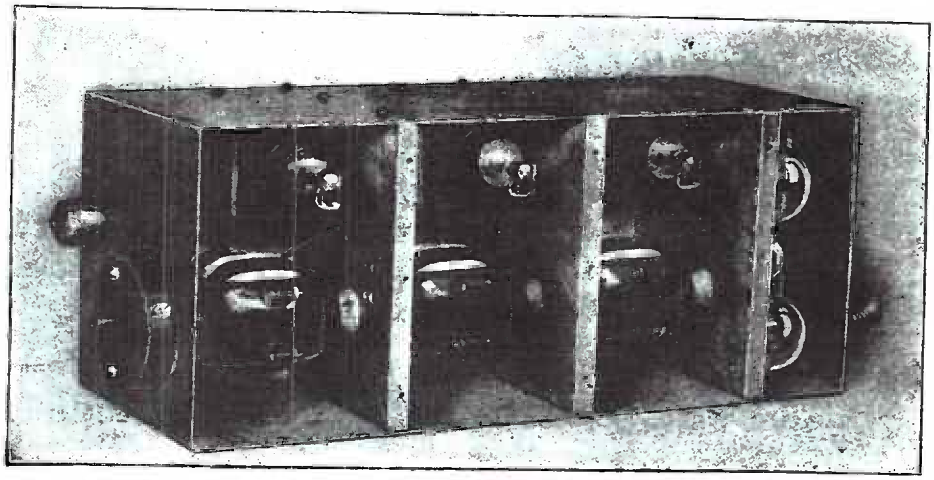

Fig. E

Internal appearance of the new Delco automotive receiver, the circuit of which appears on page 106. The three variometers, ganged together, control the tuned circuits, being trimmed by adjustable condensers. The shaft visible at the left is connected by cable with the tuning dial on the instrument board.

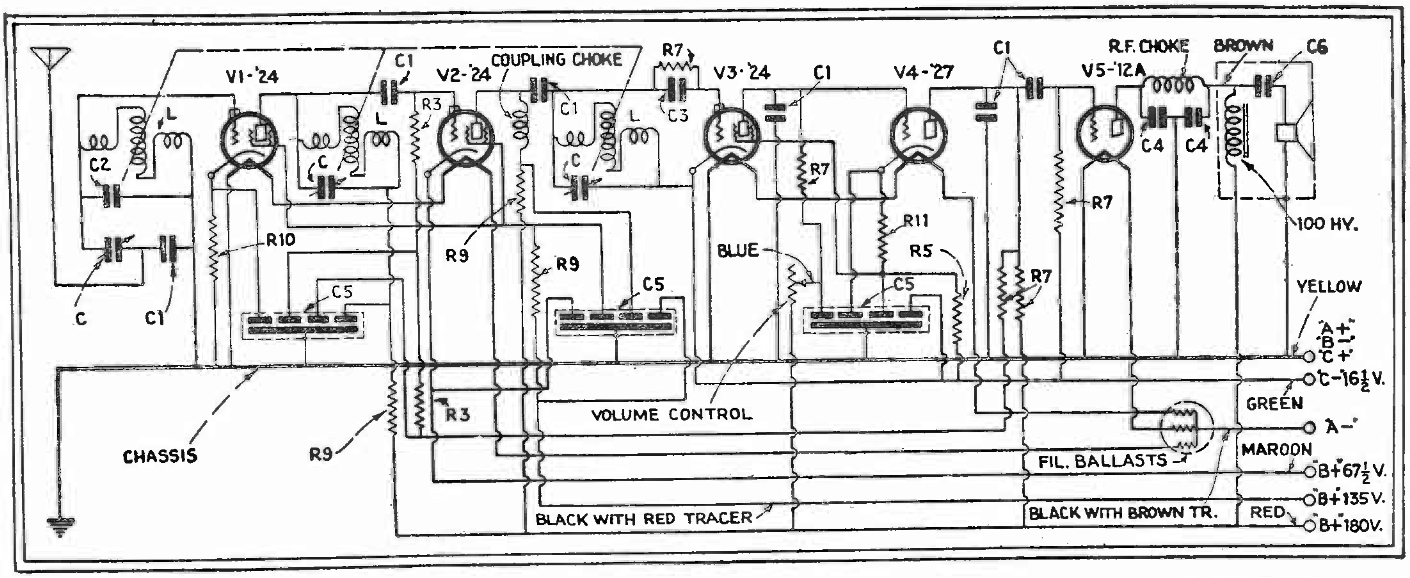

usual in automotive sets, from the storage battery. For this purpose, the first two heaters are in series; and the third is in series with that of the '27 first audio tube. A '12A power tube provides the input to a magnetic speaker which incorporates an output filter. The use of direct coupling from the detector into the first audio stage, and of a tone filter to provide timbre suitable for the enclosed interior of a car, will be observed; as well as an automatic volume control to maintain steady output against the sudden changes in signal strength caused by the movements of the car from one location to another—as into and out of the electrical "shadow" of a steel structure.

Other features are the screw-adjusted trimming condensers C for trimming the variometers (the first of these compensates variations in the antenna); the filament ballasts, which are three resistors in a single glass bulb, designed for the purpose; a special shock-cushioning device to protect the tubes; reduction gearing, to eliminate the effect of road bumps while tuning; and a spring stop for the tuning dial, at the end of the scale.

For convenience, the battery connections are made, not directly to the set chassis, but to a distribution plate on the reproducer, which is mounted at the right of the receiver, also under the cowl; from here they are carried to the chassis through a shielded cable. The "B" batteries drop into a shield can, which is recessed into the floor, and are held in place by two strips of wood. The shielded cable leading from them to the reproducer is laid in the frame channel and carried through the dash. The "C" battery is supported by a little bracket under the cowl. The case of the receiver is grounded, thus picking up one side of the filament circuit.

Details of Circuit

The constants of the parts shown in Fig. 4 are as follows: R3 (brown), 250,000 ohms; R5 (yellow), 100,000 ohms; R7 (gray), 500,000 ohms; R9 (black and red), 10,000 ohms; R10 (lavender), 1,250 ohms; R11 (black and brown), 75,000 ohms; grid leak (white), 2 megs.; C1, .00025-mf.; C2, .00003-mf.; C3, .0001-mf.; C4, .01-mf.; C5, four 0.25-mf. units; C6, 1.0-mf.; C7, .0005-mf.

Fig. 4 (above)
The circuit of the Delco automotive receiver. The variometer tuning arrangement and other novelties are obvious.

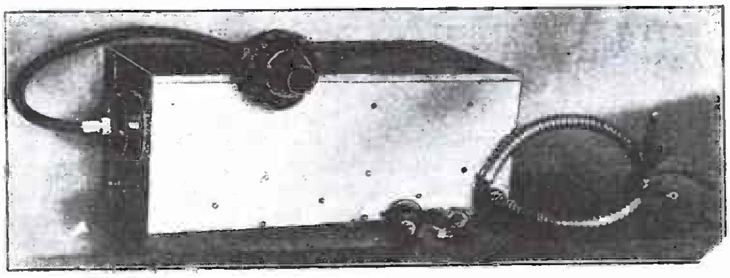

Fig. F (right)
Appearance of the Delco chassis, with cables connected. The switch and volume control are seen in the foreground, separately

Tests with a Jewell No. 134 analyzer should read as follows:

Tube		Voltages			
			Control-	Screen-	Plate
No.	Fil.	Plate	grid	grid	Ma.
V1	1.9	125	4.8	100	3.2
V2	1.9	72	0.0	42	2.2
V3	1.9	15	0.0	10	0.13
V4	1.9	45	1.0	....	0.19
V5	3.9	137	0.2	....	5.5

(This is a special instrument with a 2500-ohm-per-volt meter, and the readings are therefore different from those of other testers.)

With a 0-10-ma. meter in the "B+" 67½-volt lead, the plate reading should drop from 3 or 4 ma. to zero, when the volume-control knob is turned to the left. If it does not do so try changing the type '24 tube at V3; and the '27 and remaining '24s if this result is not obtained. The 10-ma. meter should be used to check the resonant condition of the antenna circuit; maximum signal strength, with volume control full on, being indicated by minimum meter reading, when condenser C is properly adjusted.

The receiver is built by the Delco Radio Corporation, for the General Motors Corp. and distributed through United Motors Service. Factory-equipped cars are provided with built-in aerials, which lead in beneath the cowl; others have special installations, in accordance with their construction.

Installing a Standard Receiver

ABOUT a year ago I decided that I wanted radio in my car. I tried three sets which I made myself. All would work on a good outside antenna, but they were not satisfactory on a car antenna. I later decided to try a standard broadcast receiver—the Crosley screen-grid "Model 21." In contrast to the usual location of an automotive receiver, I mounted this on the shelf back of the seat in my coupé. The receiver was at the right, the dynamic speaker at the left; the "B" and "C" batteries were located under the rear deck; and the "A" supply was, of course, derived from the storage battery of the car.

To eliminate the interference from the engine, I used a 25,000-ohm resistor connected in series between each spark-plug and its ignition lead. Between the frame of the generator and the relay box from which a lead is taken to the ammeter, I shunted an 0.25-mf. condenser; this connection must be made on the generator side of the box, or the noise will interfere with reception when driving at a high speed. Between the ignition coil and the distributor cap, I inserted a 30,000-ohm resistor. The lead-in is sheathed wire

With this arrangement, and a copper-screen aerial in the top of the car, I have been able to receive, while driving, stations over a thousand miles distant with plenty of volume.

I find it very convenient to carry a small aerial wire with battery clips on each end. When the car is stopped, I can receive far distant stations with extreme volume by clipping one end of this wire to my aerial, and the far end to any extensive metallic object, such as a wire fence, a windmill, etc.

Screen Grid Superheterodyne for Motor-Car Use

The circuit and layout of a sensitive set designed for the constructor who wishes to build his own touring companion

THE "Automobile Portable" sketched here is a model which the writer designed in response to the widespread demand for a successful receiver of this type, for which a great number of "radio-minded" car owners have been seeking. The schematic circuit is Fig. 1; and Fig. 2 shows one very convenient method of mounting the receiver chassis under the instrument board of a car. Whether the automobile installation is to follow this plan must be determined by the design of the car itself and the convenience of the owner. Fig. 3 is the layout of components.

This receiver is one of high sensitivity and consequently for distant reception which calls for maximum amplification, it will generally be found necessary to stop the motor of the car. For DX work, therefore, it is desirable to consider this set principally as a high-quality portable receiver, serviceable during halts. Local operation, however, may be available during the run; and this is a matter in which the thoroughness of installation is important. The receiver itself is completely shielded; the interference to be guarded against being that picked up by the antenna.

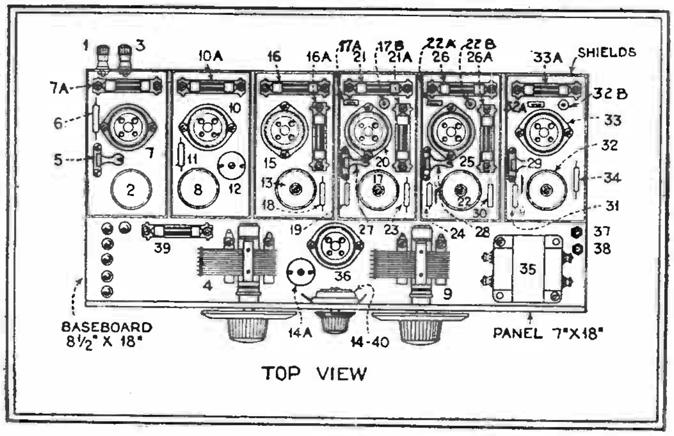

Fig. 3

The layout given here is especially compact and introduces no complications. Wiring is run on top of the baseboard in the most direct fashion. Each stage is surrounded by its shield can.

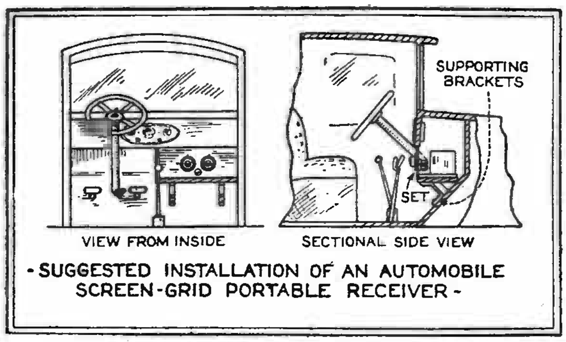

Fig. 2

The receiver may be located wherever desired; but standard practice favors this arrangement.

(In this connection, the subject of ignition interference and shielding and car antenna installation has been discussed at some length in articles appearing in the February and March issues of RADIO-CRAFT.—*Editor.*)

The Circuit Arrangement

The circuit, as will be seen from Fig. 1, is a superheterodyne with two tuning dials, controlling condensers 4 and 9, and a volume control 14 comprising also a filament switch 40. Following this are three stages of screen-grid intermediate frequency amplification, a second detector, and a semi-power stage of audio giving suitable volume for a car's interior, or ordinary room.

The input circuit of the first detector 7 is tuned to the broadcast station's frequency; tube 10 is the oscillator. Both are 01A's. 15, 20, 25 are 115-kc., intermediate-frequency screen-grid (type '22) amplifiers. 33 is the second detector, also an 01A; while 36 is the only A.F. amplifier, for which a '12A tube is recommended.

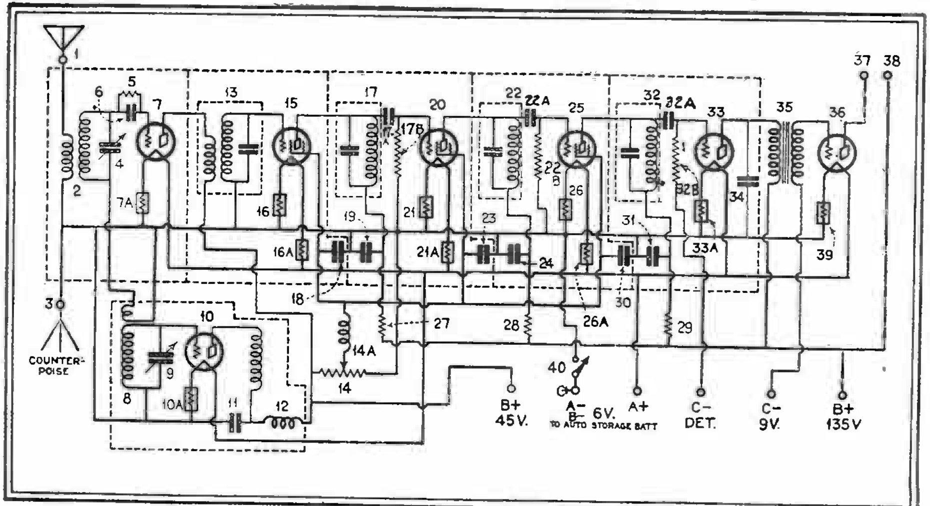

Fig. 1

This receiver, with three stages of intermediate-frequency, screen-grid amplification, will build up any signal to the point necessary to give volume suitable to the '12A output tube (36) which is favored in the latest automotive radio designs.

Each stage of the A.F. amplifier is shielded by a copper can.

The intermediate-frequency output of tube 7 is coupled through the R.F. transformer 13 to the first intermediate-frequency amplifier 15; the secondary of unit 13 is tuned, through a limited frequency-range, by the small (screw-adjustable) variable condenser built into the unit and shown in the diagram. Tuned-impedance coupling is used in the remaining stages of I.F. amplification. All the inductances used in this set are of the "interchangeable" type and plug into receptacles (standard tube sockets). Tuning and oscillator variable condensers are of .00035-mf. capacity with "Midline" plates.

The input circuit of oscillator 10 is tuned from 180 to 460 meters, to heterodyne the desired signal to an intermediate frequency of 115 kc. The selectivity obtained by this circuit arrangement is not sufficient to give interference-free performance in some localities, where a regular outdoor antenna is to be used in conjunction with a home installation. However, exceptionally satisfactory results may be obtained when a short wire or a metal screen in the car constitutes the pick-up.

Volume is controlled by adjusting the resistor 14, thus varying the screen-grid potential of tubes 15, 20 and 25 from 0 to 45 volts. Resistors 16, 21, 26 reduce the filament current and develop the negative biasing potential required for the control-grids. To increase the amplification obtainable from them, and to prevent circuit oscillation, flexible resistors 27, 28, 29 are inserted in the plate circuits of these tubes as "circuit isolators."

Construction of the Set

Condensers 4 and 9 are mounted symmetrically on either side of a vertical line scribed on the back of the panel. The condenser-shaft holes are drilled on the horizontal center line; two additional mounting holes must be drilled for each condenser. The combination volume control and switch is located on the vertical center line, about two inches from the bottom of the panel. Five holes should be drilled for fastening the panel to the baseboard, with the aid of right-angle brackets.

The six tube sockets are mounted on pieces of sponge rubber to prevent tube vibration. (The rubber pads are cut to the shape of the sockets, and two holes are punched through each for the mounting screws. The fastening nut should not be drawn up too tight, and should be soldered in place after the correct adjustment has been made.)

Where the wiring is run through the

shields, spaghetti tubing should be used to prevent short-circuits. Control-grid leads must be kept as short as possible.

An Amplion "Lion" speaker, type "AC-21" has been used by the writer in the car installations he has made.

Coil Data

Coil No. 2 consists of 17 primary turns of No. 36 or 38 enameled wire and 110 secondary turns of No. 30 enameled wire on a tube 1¼ inches in diameter and 2⅜ inches long. The outer leads of this coil unit are the aerial and grid leads; as both coils are to be wound in the same direction. Primary and secondary are spaced 1/16 inch. Coil No. 13 is wound on a tube 2 inches in diameter and 3½ inches long. The primary consists of 85 turns of No. 40 D.S.C. wire wound on top of, and at the filament end of, the secondary. Details for this secondary are the same as for coils 17, 22, 32, it is 350 turns of No. 40 D.S.C. on a tube 2 inches in diameter and 3½ inches long.

Coil No. 8, wound with No. 30 D.S.C. wire, has a grid winding of 80 turns and a plate winding of 54 turns, separated 1/16 inch, on a tube 1¼ inches in diameter and 3 1/16 inches long. Over the grid coil is wound the 10-turn pickup coil. Coil 2 is shunted by a variable capacity 4 of .00035-mf.; coil 13 is shunted by a "Type G" X-L Variodenser (with a maximum capacity of .0005-mf.), to tune the circuit to the intermediate frequency of 115 kc.; coils 17, 22, 32, are shunted by "Type G" Variodensers; condenser 9, a variable unit, has a capacity of .00035-mf.

List of Parts

Two .00035 mf. Hammarlund "Midline" variable condensers (4, 9);
One Remler antenna coupler, interchangeable inductance No. 550 (2);
One Remler interchangeable inductance, No. 612 (13);
Three Remler interchangeable inductances No. 614 (17, 22, 32);
One Remler oscillator inductance, No. 570 (8);
Six Remler shielding cases, No. 720;
Three 1000-ohm Electrad "Truvolt" flexible wire resistors (27, 28, 29);
One Electrad "Royalty" type "B" potentiometer, (14) with filament switch attached (40) or one Electrad "Super-Tonatrol" type No. 5 (14) and separate filament switch (40);
Two Silver-Marshall R.F. chokes, type 276 (12, 14A);
One .001-mf. Polymet small molded bakelite condenser, type SM-1258 (34);
Ten .006-mf. Polymet molded fixed mica condensers, type MC-1219 (11, 17A, 18, 19, 22 A, 23, 24, 30, 31, 32 A);
One Thordarson audio transformer, type R-300 (35);
Thirteen Eby sockets, UX-type (2, 7, 8, 10, 13, 15, 17, 20, 22, 25, 32, 33, 36);
Eight Eby binding posts (1, 3) and others not numbered);
One .00025 mf. Polymet grid condenser (type SM-123) (6);
One 2 meg. Durham metallized resistor grid leak with vertical single mounting (5);
Three 2 meg. Durham metallized resistors, type MF4-2 with tinned-wire pigtail leads (17B, 22B, 32B);
Three Amperites, No. 1-A with mountings (7A, 10A, 33A);
Six Amperites, No. 120 with mountings (16, 16A, 21, 21A, 26, 26A);
One Amperite, No. 112, with mounting (39);
Two Electrad tip jacks (37, 38);
Two vernier dials;
One roll Corwico "braidite" stranded-core hook-up wire;
One can Kester rosin-core radio solder;
One "Insuline" panel, 7 x 18 x 3/16 inches;
One wooden baseboard, 8½ x 18 x ½ inches.

Automotive Antenna Problems

IN the following writeup on page 273 is a description of the circuit and general mechanical details of the Bosch automotive radio installation. Further information on the manner of placing the equipment in the car is given below.

Fig. 1 is a skeleton view of the car chassis, giving a clear detail of the placement of the units that comprise the receiver equipment.

Probably the first thing to draw the attention of the reader will be the use of shielding. The four, 45-volt, dry "B" batteries are placed in a shield box, with a separate cover, that is conveniently slung on the right side of the car chassis, in most cases, behind the car's storage battery, which is contained in a strong iron shield can. As previously mentioned, the entire receiver chassis is thoroughly shielded. The power leads from the set on the dash to the batteries under the car floor are run in shielding (BX cable). The low-impedance R.F. transmission line from capacitor-plate to set (what is normally called the lead-in) is run in a shielding tube. Also, the short volume-control leads from the set to the panel-mounted control unit are shielded, to prevent pick-up from the ignition equipment of the car.

The most convenient place for mounting the control unit is at the extreme right of the instrument panel, as shown in Fig. 1 (and in Fig. A in the May issue), as necessitated by the tuning control; which is a steel shaft enclosed by a tube. Universal joints at each end of the shaft permit the twisting motion of the tuning knob to be transferred up or down, right or left; and a "splined" or slotted sleeve permits the shaft to ride back and forth, without binding, as the dash and instrument board twist and turn slightly as the car rolls along. Because different cars will necessitate varying lengths for the driving shaft, it is shipped "oversize," and cut to the desired length.

Although the reproducer is shown in Fig. 1 mounted directly on the steel case of the receiver chassis, it is possible to place this unit in any other part of the car. This is a late development in design; many car owners consider it better to have the reproducer mounted on the inside of the roof, and at the rear. For this purpose, there is available a mounting bracket which fastens to the overhead bows. That there may be considerable point in so placing the reproducer to keep it out of earshot of the driver is evident when we consider a few state authorities offer objections to automotive radio, on the ground that it may distract the attention of the driver of the automobile. However, certain investigators have

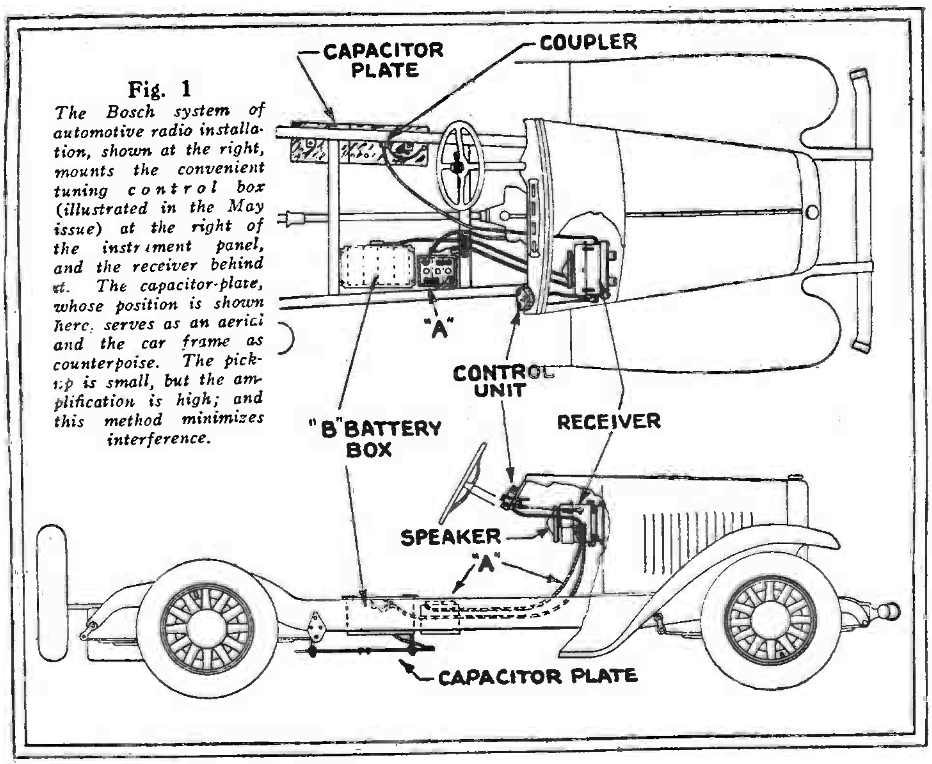

Fig. 1

The Bosch system of automotive radio installation, shown at the right, mounts the convenient tuning control box (illustrated in the May issue) at the right of the instrument panel, and the receiver behind it. The capacitor-plate, whose position is shown here, serves as an aerial and the car frame as counterpoise. The pick-up is small, but the amplification is high; and this method minimizes interference.

offered figures which would indicate that *a car with a radio is driven more alertly and carefully* than one without.

To return a moment to the tuning mechanism—attention should be given to the successful manner in which a major problem has been mastered. All set owners are familiar with the difficulty which may be experienced in trying to tune in stations, due to inexpertness, or to vibration of the receiver if it is portable. By applying a worm gear to the mechanism the problem is solved; motion of the tuning knob may be transferred to the shaft controlling the tuning condensers, perfectly, but the condenser shaft cannot move against the worm gear (a sort of automatic locking effect is obtained for all positions of the tuning condensers). This worm gear construction results in a "vernier" action which makes tuning very easy under all conditions; and, by careful machine work, backlash is made no longer a problem. The pinion shaft projects through the right end of the chassis on the dash and terminates in a small housing containing two small spiral gears serving to bring the shaft in proper relation to the control unit on the instrument board.

By this time the technician has probably realized that everything throughout this design has been developed with the first thought for *rigidity*. Further details will bear out such an observation. For instance, the old idea of using a loose wire for the aerial has been dismissed; and in its stead we find a *capacitative* aerial of the most solid possible construction. Two sheets of steel constitute the "condenser aerial," when mounted underneath the car chassis; the plates being the "high," or aerial' side of the pick-up system and the chassis acting as the "ground." These two plates are, electrically, one after they have been bolted together to obtain the greatest possible length permitted by the available space underneath the chassis. It will measure approximately 30 inches in length and 8 inches in width. The greater the area of the capacitor plate, and the closer it is to the ground (yet keeping sufficient ground clearance), the louder will be the signals. Such an aerial minimizes possible signal fading due to its motion; and concentration of the signal pick-up in this manner reduces the chances for ignition interference.

Bosch Automotive Receiver

MOTOR-CAR radio, or "automotive radio," as it is now known, is rapidly coming to the fore. Indications are that the summer of 1933 will find thousands of cars of standard make factory-equipped with radio receiving sets that closely approach the average home receiver in volume, sensitivity and quality.

Another evidence of the activity in automotive radio is the new Bosch motor car receiver pictured in these columns. The finer details of design and construction are too numerous to be described in this article, but will be explained in detail in forthcoming stories.

The extension at the left of the Bosch automotive receiver, shown here, is the R.F. transmission line, ending in the pickup device which takes the signal from the "earth capacitor." The battery cable is opposite.

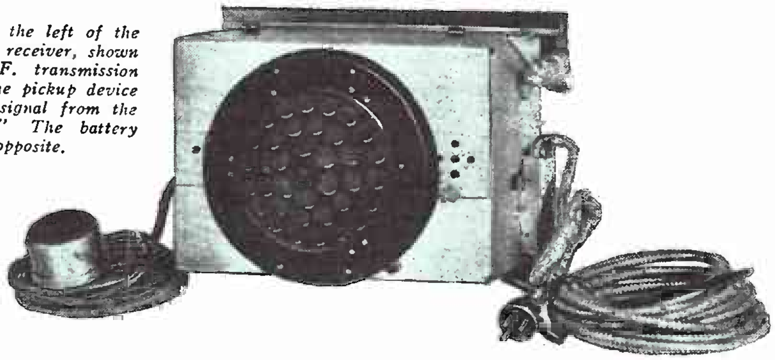

On the upper right side of the receiver chassis is the tube which receives the flexible shaft from the control unit and rotates the condensers. The reproducer shown is connected to the front of the shield can, which lifts off with it.

Sponge-rubber mountings are provided to support the receiver chassis in position behind the instrument board. A steel shaft with universal joints couples the tuning-knob control unit (shown in the reproduced photograph) to the shaft of the ganged tuning condensers. The off-on key-switch, fuse, pilot light and volume control also are housed in the control unit. A balanced-armature magnetic-type reproducer with a 6-inch cone has been developed for this set; a baffle effect is obtained through mounting the reproducer, in its metal housing, on the chassis of the receiver. The reproducer is "pitched" with particular regard to the requirements of the interior of cars and the usual noises of a car in motion.

To the technician the schematic circuit of this receiver, shown in these columns, presents many points for conjecture. Probably the first will be that some form of generator or converter is required to supply alternating current for the filaments, as well as "B" and "C" potentials for the type '24 A.C. tubes. The answer is that the set is entirely battery-operated; the '24s are used in preference to '22s to obviate a condition of noisy reception due to fluctuating "A" potential as battery load and engine speed vary. True it is that considerable current is drawn from the storage battery; but there is no more difficulty in following this design than in planning the current supply for any other power requirement; the hardest thing to overcome is the mental inertia of custom against the fact that the storage battery is perfectly suited to the requirements. The maximum "B" potential required for this set is obtained from a bank of "B" batteries that delivers 180 volts.

Two outstanding technical advances in car radio are noted in an "earth capacitor," as Bosch engineers call it (this is a plate, insulated from the chassis but slung thereunder, which functions as the signal pick-up or antenna) and an "R.F. transmission line" which connects the earth capacitor to the set.

Further values for parts used in the Bosch screen-grid radio set are as follows: R1, 18,000 ohms (variable bias for the control grids of tubes V1, V2 and V3); R2, 500 ohms; R3, 25,000 ohms; R4, 500,000 ohms; R5, 500,000 ohms; R6, 2 megs.; R7, 250,000; R8, 1.3 ohms; R9, 1.1 ohms; R10, 1,000 ohms; C5, C6, C8, C9, 0.5-mf.; C10, C11, 0.0001-mf.; C12, 0.002-mf.; C13, 1-mf.

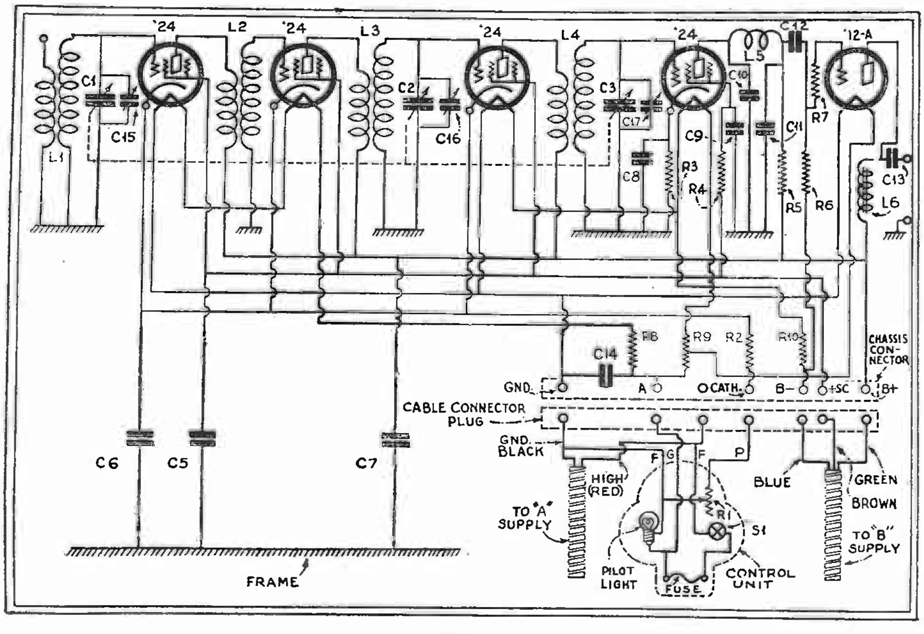

Fig. 1
The schematic circuit of the Bosch Motor Car Radio receiver, made by the American Bosch Magneto Corp.; it includes four tuned-input, battery-operated, '24-type screen grid tubes, as R.F. and detector stages, and a single audio output tube, operating the built-on magnetic speaker.

Car Battery for Automotive Radio

The Storage Battery Again Assumes a Place of Importance in Radio

WITH the coming of automotive radio, new opportunities and new problems are opened to the Service Man; as by the use of the automobile's storage battery to light the filaments of a car's radio set. In receivers incorporating '24 and '27 type tubes, series-parallel filament circuits are required; and, in many cases, the voltage drop across the heaters of these tubes supplies grid bias. For this reason, it is necessary to exercise proper care in determining the polarity of the filament leads.

Usually, the negative side of the battery is grounded to the car frame; and there is then no additional installation problem; since the metal shielding of the set is the negative filament connection. However, when the car battery is grounded at its positive terminal, it becomes necessary to reverse its terminal connections, to bring it into proper relation with the radio receiver; and also to effect certain changes in the charging system. To understand these, the following explanation should be considered.

Automotive Electrical Systems

The charging apparatus comprises four elements: the storage battery, the generator, the reverse-current relay, and the ammeter. The manner of their connections is shown in Fig. 1.

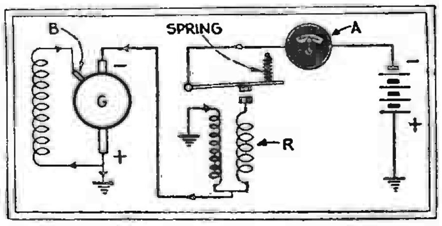

Fig. 1
Connections of a car's generator and battery.

The generator G is a direct-current machine, which incorporates a third brush (B) to control the current output; so that this will remain fairly constant over a wide range of speeds.

The reverse-current relay R has two windings: one of many turns of few wire, which is the coil operating the relay; and the other of few turns of heavy wire, which is in series with the contacts. The first operates the relay when the output potential of the generator reaches about 12 to 14 volts; while the other is so wound that it will partially demagnetize the relay when the generator is charging the battery. When the voltage of the storage battery approaches that of the generator, and the magnetic field is sufficiently weakened, the spring on the armature opens the contacts. This prevents the storage battery from discharging back into the generator.

For automotive use the ammeter A must be a rugged instrument to withstand the shocks of operation. It contains an iron vane suspended in the fields of a permanent magnet and of a coil of two or three turns through which the current flowing through the ammeter passes. The resultant of the two fields determines the position of the vane and, consequently, the reading of the ammeter.

It is desirable to bear in mind that the storage battery is of very low internal resistance. When fully charged, and shorted, it will deliver 150 to 200 amperes.

Operation During Charging

The electrical connections have been shown in Fig. 1; the armature of the generator is coupled mechanically to the car motor, so that it revolves whenever the engine is running. The residual magnetism of the generator's field poles causes a voltage across the main brushes whenever the armature is revolving. The generator is a shunt-field machine, whose third brush is a means of tapping the generated voltage to obtain the proper field current. It will be seen that, because of this manner of exciting the field, the field and the armature form a series circuit. The current flowing in the field creates magnetic flux which aids the residual magnetism, and thus causes the generated E.M.F. to increase further until it reaches a value of 12 to 14 volts when, as said above, the shunt winding of the magnetic relay creates sufficient pull to operate the relay. When this occurs, the generator sends a charging current into the storage battery, opposing its own voltage. The current which flows through the series winding of the reverse-current relay weakens the magnetic flux acting on the relay arm, because it sets up flux opposing that of the shunt winding.

Since all electrical circuits contain resistance, the voltage drops are equal to the voltage increases in any complete circuit. The generator's resistance is approximately one-third of an ohm, and that of the battery from a fiftieth to a tenth of an ohm, depending on its state of charge.

If we neglect the resistances of the other parts of the circuit (which are small in comparison with those of the battery and the generator when the connections and joints are clean and tight) the largest voltage drop occurs in the generator. From this it follows that the major part of the power loss is caused by dissipation within the generator. However, if high-resistance joints are caused by corroded or loose connections, the voltage drops in them will decrease the charging rate of the battery.

Reversal of Connections

When the ground connection of the battery is changed from positive to negative, what will be the effect on the charging of the battery? Will the generator have to be reconnected, to prevent it from charging the battery backward—that is to say, discharging it? Let us consider this.

Neglecting all resistances in the circuit except those of the battery and generator, let us take these values as .07-ohm for the former and 0.33-ohm for the latter. Since the battery is now connected negative to ground, and the generator positive to ground, the two potentials are in series. The generator, when its output reaches about 12 volts, closes the relay contacts and a heavy current flows. This will be equal to 18 volts (12 volts plus 6 volts) divided by 0.4-ohm (0.33 ohm plus .07-ohm), amounting to 45 amperes.

The voltage drop in the generator will then be, according to Ohm's law, 14.85 volts; and that in the battery 3.15 volts. The voltage drop across the generator then exceeds its generated voltage by 2.85; and the voltage drop in the battery will be less than its generated voltage by the same amount.

This voltage drop, exceeding the generated voltage, in the generator causes a reversal of the current in its field windings; this reversed current reverses the magnetic flux of the field poles, and the generator begins to generate a voltage in opposition to that of the battery. This action takes place inside of two or three seconds; it is, in electrical language, a transient phenomenon.

The generator is now charging the battery, but the current is flowing in a reverse direction; the ammeter leads, therefore, should be reversed in order to correct its reading. The reversal of current flow, however, will not affect the ignition and lighting systems, in which the direction of the current's flow makes no difference.

A second method may be employed to reverse the voltage of the generator, when it is necessary to reverse the battery terminals. Before starting the car, the generator field is reversed by holding the relay contacts closed for about ten seconds; so that the voltage drop of the battery across the generator sends a current through the field.

Finally, another way is to have someone hold the contacts closed while you start the motor up. The reversal of the ammeter would indicate the reversal of the generator. These last two methods are practical, except when the battery is quite run down.

Sometimes, when the first method is followed, the generator voltage will not be reversed. The principal reason is that, the voltage drop across the generator did not exceed the voltage which it generated; and this will be found due to a high-resistance contact, somewhere, which has absorbed the larger portion of the voltage drop of the circuit. Corroded terminals on the battery, sulphated plates, run-down batteries, loose connections or bad joints, may be looked for. In such cases, the job is out of the sphere of the radio Service Man, and belongs to the automotive Service Man or service station to correct.

Improving An AUTO RADIO

THE trials and tribulations of the makers of automobile radio sets are many; all too often the greatest profits made from these sets have accrued to the purveyor of hair dyes to whom the harassed and grayed engineer has finally been driven.

Recently it was the writer's pleasure (?) to become acquainted with some of these problems. The results of his labors are embodied in the description of the set illustrated in Fig. A which is the basis of this article.

Before taking up the constructional details of the set itself, a brief review of the major difficulties to be encountered in this field will perhaps be of interest. These are, in the order in which they rank, as follows:

(1) The inadequacy of the signal pickup system (i.e., the antenna and ground substitute) for furnishing a large signal input;

(2) The difficulty of obtaining a high gain in a very small set;

(3) The close voltage limits within which the type '36 tubes must be held to secure a maximum of efficiency (this is distinctly at variance with the claims made for the tube which, supposedly, was designed to be non-critical as to these factors);

(4) The difficulty of providing in an automobile set, where the leads are long, a satisfactory volume-control that shall operate in the R.F. stages without introducing a loss of amplification, audio howling, R.F. oscillation or tube blocking.

In solving these problems, it would also be well if we could achieve an equality of gain throughout the broadcast band so that our little automobile set would be in no way inferior to its big brother, the home radio set.

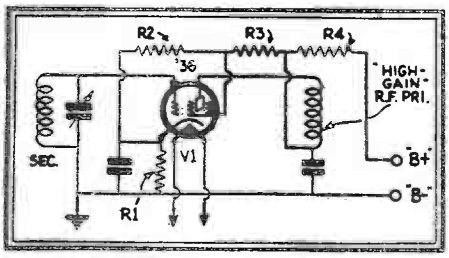

Fig. 1
A novel method of volume control; resistor R2 is variable.

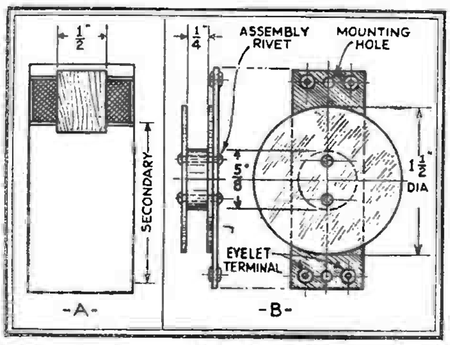

Fig. 2
Construction details of A, the tuned R.F. transformer and B, the untuned unit.

Analyzing the Problems

Analysis of these factors at once rules out the first item from consideration; we can do nothing to secure a good pickup in a moving car without adopting unsightly and impractical expedients. Since our little set shall indeed have to be long on performance, in it we shall incorporate high-gain high-primary-inductance R.F. coils, carefully isolated R.F. circuits, and the maximum of regeneration possible.

We shall do away with taps on our "B" batteries and shall use, instead, a voltage-dividing system; since by this method we can hold our voltages within closer limits and, once adjusted, our set shall be more nearly independent of battery fluctuations than would otherwise be the case.

As to the volume-control circuit, we have adopted a really simple expedient that at once removes our control from any signal circuit and allows us to operate our tubes at their most critical point without in any way increasing the fear of oscillation or tube blocking.

Novel Volume-Control

In Fig. 1, this circuit is outlined. Here R1, R2, R3, and R4 form a voltage-divider circuit across the "B" supply. R1, R3, and R4 are fixed resistors; R2 is variable. Any variation in R2 will change the current flow through the resistor network and, of course, change the voltage drop through each resistance. Thus, if the resistance of R2 is decreased to reduce the amplification, the increased current flow through the circuit results in a simultaneous decrease of the plate and screen-grid voltages, as well as an increase in the negative grid bias; in combination, these provide infallible volume-control. This means of control gets away from the increase in plate and screen-grid voltages which accompanies the conventional control-grid bias-variation methods where the plate and screen-grid circuits are fed through resistances.

Further, this method defeats the detection which often results at low volume in an R.F. stage when the screen-grid bias is reduced. (Such detection is the result of low current through the cathode resistance causing too-low control-grid bias.) Another advantage of this method of control is that howling, which sometimes comes as the result of the screen-grid's voltage becoming close to that of the plate, is made impossible. Such a condition is apt to occur when, as the result of decreased screen-grid current or increased plate current, the altered voltage drop through the filter resistances tends to equalize the plate and screen-grid voltages.

The smooth operation of this control is no small factor in allowing the close voltage settings which the type '36 tube requires for peak operation and which no other *simple* method can insure.

Uniform R.F. Gain

We have mentioned the desirability of providing uniform over-all gain throughout the broadcast band. Mechanical means through movable primary coils could be used but for the ideals of compactness and mechanical simplicity. Similarly, constant-coupling electrical systems, ideal in themselves, are impossible without the use of an untuned R.F. stage resonated at the weakest points of our response curve.

In practice, we shall resonate the primaries of our tuned stages at approximately 490 kc., the primary of our untuned coil at 850 kc., and its untuned secondary at 1200 kc. We shall also use an adjustable capacity-coupling in our tuned coils to increase the low-wave response.

The design of these transformers is shown in Fig. 2. At A is shown the tuned R.F. coil—standard in every way except that its low-inductance primary has been replaced by one consisting of 625 turns of No. 32 or 34 enameled wire wound on a ½-in. core and so placed that one end of the primary is *just even* with the ground end of the secondary without actually being within the secondary winding. In wiring these coils, the inner lead of the primary is attached to the plate, and the end of the secondary farthest from the primary, to the control-grid.

In B of Fig. 2 is shown the coil form for the untuned R.F. transformer. This is a built-up spool whose core is ⅝-in. in diameter, ¼-in. inside length, and 1½-in. outside diameter. To one end of this spool is attached a strip of bakelite projecting be-

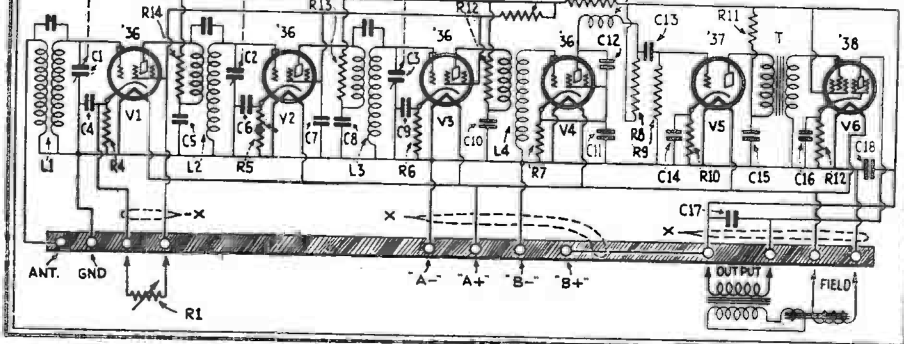

Fig. 3
Complete diagram of the auto receiver. The values of the resistors are such that practically no changes in plate and screen-grid voltages result when the volume is changed.

yond the spool winding-space and carrying the terminals of the coil and the mounting holes. The primary of this coil is wound with 350 turns of No. 34 enameled wire. Over this is wound 160 turns of No. 32 silk-covered wire. The inside lead of the primary is attached to the plate of the 3rd R.F. tube; the outside lead of the secondary, to the detector control-grid.

Introducing Regeneration

In mounting the untuned R.F. transformer, an expedient the author tried may be attempted. In his case, he sought, by leaving the bottoms of the tuned R.F. shields open and by mounting the untuned transformer directly under the third tuned coil, to introduce a variable regeneration control. This was operated by being pivoted in an arc across the opening in the R.F. coil shield. The untuned transformer was mounted with first one end nearest the tuned R.F. coil and then the other.

In the design as finally worked out, though, this means of control was not adopted. Instead, a slight amount of regeneration was secured by so placing leads that a capacity feed-back existed in the R.F. stages between the plate and the control-grid of the tuned R.F. tubes. This capacity was small, being due to a few turns of No. 24 insulated wire wrapped around the control-grid lead and connected directly to the plate of the same tube.

Of course, there is no direct connection between the control-grid wire and that wrapped about it. Just how many turns may be used depends upon the individual case; in the set here described, only six turns were required. An alternative to this wire-wrapping stunt is the use of a midget compensator of no more than a 10-mmf. capacity maximum connected from the plate to the control-grid.

Checking Resistors

Of special note when using carbon resistors is the importance of checking the resistance values under actual operating condition. To his sorrow, the author found that some carbon resistors used at full ratings could be depended upon to change their values as much as 60%! Now, in addition to verifying the resistance values, he is careful to see that the "watts ratings" of these resistors are not exceeded.

Another point to be noted is that the plate-to-grid coupling condensers indicated in Fig. 3 are best located within the coil shield of the respective transformers whose low-wave response they improve. However, care should be taken that they do not approach too closely the coils themselves as this would reduce the latter's efficiency.

The resistance values of R2, R5, and R6 given here should be accepted only as tentative. In the author's set they worked very well; individual circuit peculiarities might make other values desirable. The set builder is advised to try several values between 200 and 1000 ohms.

It should be kept in mind, however, that too low an R.F. control-grid bias might result in detection in the R.F. stages which, at this point, is extremely undesirable; thus, the negative bias (in the R.F. grid circuits) should always be at least one-half volt. Similarly, R7 and R8 might be experimented with to arrive at optimum values; although, if R8 is reduced much below 100,000 ohms, the loss of quality will be quite pronounced.

Parts List

Three standard tuned R.F. transformers, special primary as per text, L1, L2, L3;
One untuned R.F. transformer as per text, L4;
One random-wound R.F. choke, 15 to 20 millihenries, L5;
One 0 to 50,000-ohm variable resistance, R1 (1 watt or more);
One 15,000-ohm carbon resistor, R2 (½-watt);
One 1500-ohm carbon resistor, R3 (½-watt);
One 200-ohm carbon resistor, R4 (1/10-watt);
Two 600-ohm carbon resistors, R5, R6 (1/10-watt);
One 25,000-ohm carbon resistor, R7 (1/10-watt);
Two 400,000-ohm carbon resistors, R8, R9 (1/10-watt);
One 2000-ohm carbon resistor, R10 (1/10-watt);
One 3000-ohm carbon resistor, R11 (1/10-watt);
One 1300-ohm carbon resistor, R12 (½-watt);
One triple-gang condenser to match secondaries of L1, L2 and L3; C1, C2, C3, (with compensators);
Eight .1-mf. condensers, 200-volt rating (D.C.) non-inductive, C4, C5, C6, C7, C8, C9, C10, C11;
One .001-mf. mica condenser, C12;
One .02-mf. mica or 300-volt rating, C13;
Four .5-mf. 200-volt, C14, C15, C16, C18;
One .002-mf. mica condenser, C17.

Mounting the Loud Speaker

THE location of the loud speaker in a radio-equipped car is fixed, generally, by the model and type of the automobile. In the larger cars, or coupes of practically any description, the speaker may go under the cowl, over the windshield, or in any other convenient location. But in the popular small sedans, touring cars, etc., there is apparently no good place for a speaker, and particularly for one of the regular magnetic cone type that will give good reproduction.

In my own car, a small coach, I carried a little 8-inch horn secured over the mirror; but after a short time it became apparent that the quality of reproduction was unsatisfactory. An RCA "Model 100A" speaker gave excellent quality, for an automotive installation; but there was seemingly no place to put it, out of the way.

I then conceived the idea of mounting it in the floor. A suitable opening was then cut in the rear floor boards, behind the right front seat; it might have been made on the left side, but not in the center, because of the driving shaft. This was done with a keyhole saw, without removing the boards. The speaker chassis was then mounted on the under side, by the use of stove bolts, with the cone facing upward through the hole. One grille cloth frame was then mounted, flange down, and a piece of heavy screen, nearly as large as the cloth, was laid over it; then the other frame, with the cloth removed, was placed on top, flange up. The whole assembly, as shown here, may be secured with the same stove bolts.

For the sake of appearances, it is desirable to cut the "ears" from the frames before mounting them. The first frame, with its cloth, and the screen protect the speaker against large particles of dirt, and the screen is heavy enough to be stepped on without damage.

Finally a square box, of the proper size to fit over the speaker, was constructed and fitted to protect it from mud, dust and water. The completed arrangement, as at the left, is compact and convenient. The box was painted with several coats of black, inside and out, to weatherproof it, and a gasket of weather-strip was cut to make a tight fit to the floor, against which it was held by angle irons and wood-screws.

Finally, of course, a hole of suitable size was cut through the floor covering, above the speaker, to finish the job.

This method of mounting the car reproducer not only gets the instrument out of the way, but seems to assure better sound distribution in the interior of the body.

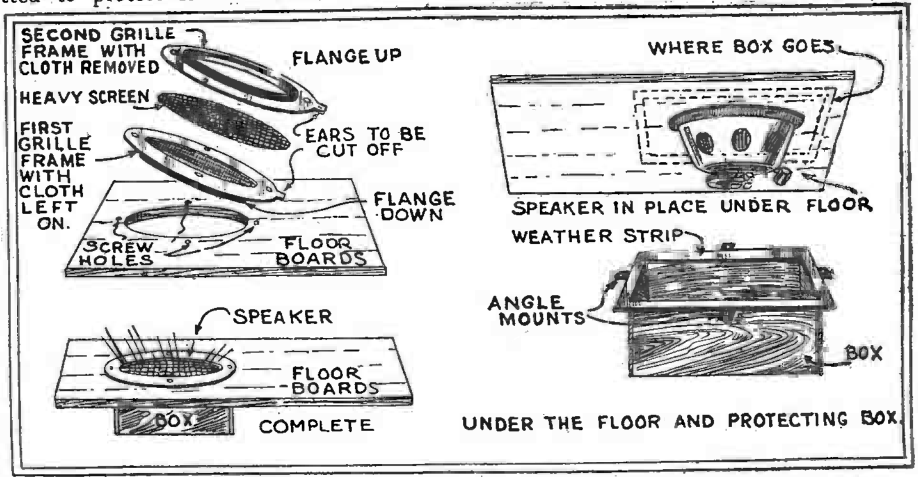

The arrangement shown was used to fit a magnetic cone speaker under the floor of a car, giving good sound distribution within. At the upper left, the units of the assembly, which is shown completed below. The speaker itself was attached beneath the car with stove bolts, as shown at the upper right; and protected from below by the square box whose details are shown at the lower right.

A "Police" Short-Wave Set for Automotive Use

WHILE a receiver in the car may be a convenience to the ordinary motorist, and even of practical value, in furnishing him with business news, modern crime detection finds it even more essential to provide liaison between headquarters and officers in the field. Radio tests have been made for some years, with transmitters and police cars; and good work has been done in Europe and Australia, as well as America; but the first standard, commercial equipment designed for this sole purpose is shown here. It is a short-wave set, especially adapted to work on the waves (between 100 and 200 meters) which have been assigned to state and city police departments by the Federal Radio Commission, and on which they send out instructions to patrolmen in motor cars and at distant posts.

This equipment, manufactured by the Delco Radio Corp. Since it is used to receive transmissions only from one special station, and must be ready to pick up a message at any instant, it is carefully set to the wavelength of the transmitter by means of screw-adjusted tuning condensers, which are then locked in position. In addition to this, while the police car or boat is in service, the transmitter will be kept turned on; it has, of course, a volume control. Its installation must necessarily incorporate an antenna and shielding similar to that used for the leads of any car; the required dry-cell batteries are housed in a shielded box, as usual.

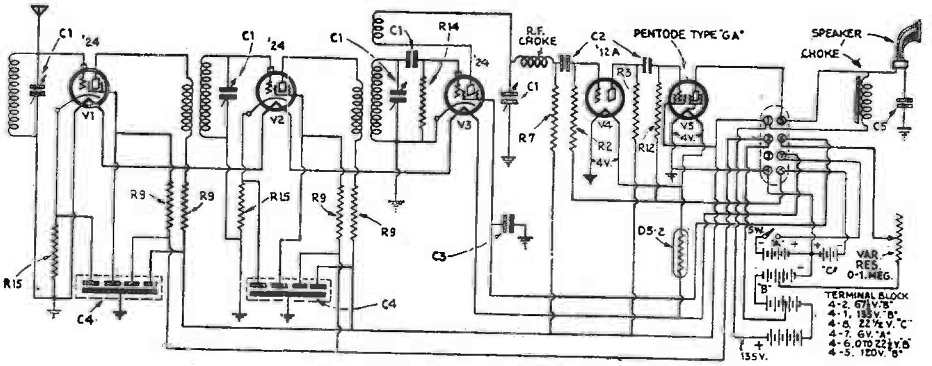

Above the schematic circuit of the Delco "Police" short-wave receiver, showing battery and speaker connections. It will be observed that a screen-grid tube is used as a regenerative detector; the variable condensers shown here are set with a screwdriver and locked
R2, 1 meg.; R3, 250,000 ohms; R7, 500,000; R9, 10,000; R12, 2 meg.; R14, 5 meg.; R15. 400 ohms.

The circuit, which is shown herewith, incorporates three '24 screen-grid tubes, which are connected in series to the car's storage battery; a first audio stage, with a '12A tube, resistance-coupled between detector and a pentode; and the latter, which serves as the output stage.

With a filament voltage of 5, and consumption of ¼-ampere current, it has an amplification factor of 70, and a rating of 500 milliwatts undistorted output, on 135-volt plate supply. It is a product of the Arcturus Radio Tube Co.

The *minimum* operating conditions, which permit a considerable reduction of battery voltages, are given as follows (a special analyzer being used):

	F	P	CG	SG	PC	GT
1 R.F.	2.0	100	1.1	55	2.0	2.8
2 R.F.	1.9	100	1.1	53	2.0	2.7
Det.	1.9	18	0.0	22.5	0.23	0.24
1 A.F.	4.0	80	0.1	....	0.13	0.5
2 A.F.	4.0	135	9.0	135	7.5	6.0

(F, filament voltage; P, plate voltage; CG, control-grid voltage; SG, screen-grid voltage; PC, normal plate current in analyzer; GT, grid test reading.)

A Compact Automotive Receiver

This is the Universal Auto-Radio Model No. 66. As the schematic circuit, Fig. 1, indicates, it incorporates two variable-mu tubes as R.F. amplifiers, a screen-grid detector, a type '37 first-stage A.F. tube, and in the output circuit two type '38 tubes in push-pull.

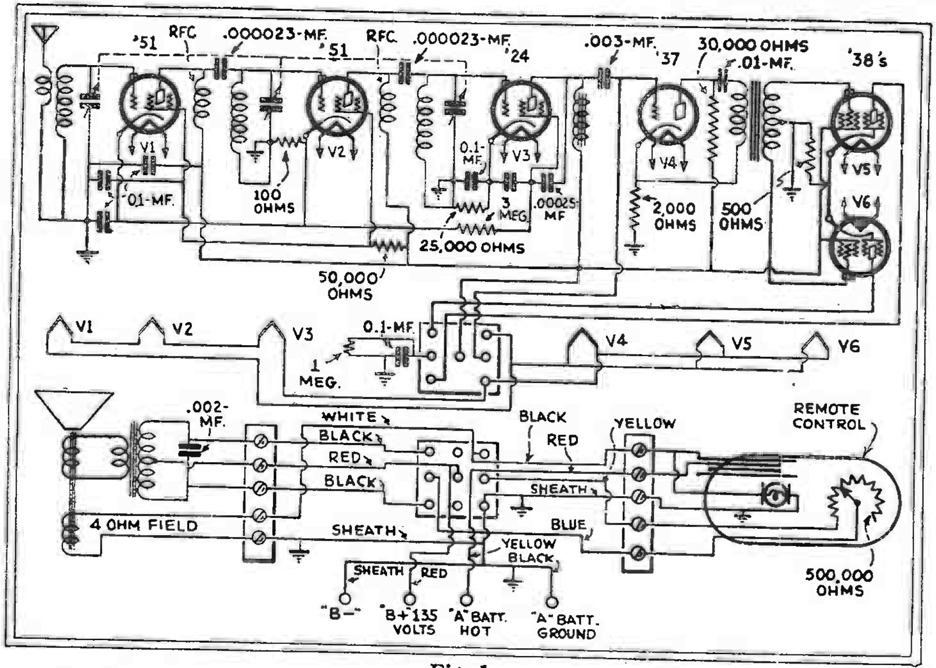

Fig. 1
Schematic circuit of the Universal Auto-Radio Model 66 receiver. It employs variable-mu tubes, a push-pull pentode output stage and a Carter remote-control unit

A Carter remote-control unit is incorporated in the 6-tube "De Luxe" model, which differs from the 5-tube "Standard" model only in the quality of the dynamic reproducer and the use of twin-pentodes.

The compact condenser gang selected for these models is manufactured by General Instrument Co.

The total "A" current consumption is 2.5 A.; the "B" drain is 32 ma. Due to the use of an automatic volume-control type of circuit, a relatively even output volume is maintained with an input signal variation of 1,000 to 1, it is said. Only two leads from the "B" supply are required, intermediate potentials being obtained by the use of dropping resistors. Although the usual tuning range is 550 to 1500 kc., special models are available for police service in the 1710- to 2420-kc. band. The chassis is suspended on rubber inside the metal case.

The rugged construction and exceptional ease of installation and replacement of these receivers, which are manufactured by Universal Auto-Radio Corp., recommend them to automotive set specialists.

CHAPTER X

Superheterodynes, Short Wave And All Wave Receivers

The Heterodyne Method of Radio Reception in Undoubtedly Leading the Field. How to Service Receivers Using this Principle of Reception is Here Disclosed.

Selling, Installing and Servicing All Wave Supers

Contrary to general opinion, the problem of keeping a short-wave receiver sold is up to the Service Man who installs the set rather than to the floor salesman.

ARTICLES on Short-Wave design, construction and operation have appeared in numerous issues of radio publications, especially those dealing with Short-Wave radio, yet perhaps the most important point of all has not been clearly stated and discussed, and this point is of supreme importance to all radio Service Men and dealers as well.

This is the fact that the selling of the short-wave and broadcast band receiver is, in the final analysis, the job of the Service Man. The dealer's salesman on the floor may get the customer to sign on the dotted line, but if the sale is to "stick," it is up to the Service Man who installs the set to properly instruct the customer. The Service Man must be thoroughly informed not only on general radio service, but also on the fundamental factors involved in satisfactory short-wave receiver operation.

Reception below 200 meters has not been particularly popular—if it may be said to have been at all popular—with broadcast listeners to programs of purely entertainment variety who now represent the bulk of the market. Buying a short-wave radio set and immediately expecting to be able to turn its knobs and, with no understanding of what they are doing, get thoroughly enjoyable entertainment from it, is expecting the impossible; and if the receiver is sold by the average store salesman, any attempt he may make to show the customer how to operate the set (and in most cases he will make no attempt, for he does not know himself) will be carefully forgotten by the customer by the time the set arrives at his home.

Since the result will be no short-wave reception at all, and a prompt complaint will be lodged at the store, the writer feels that the most important aspect of short-wave receiver servicing today is the proper instruction of the store Service Man so that when he makes the initial installation of the receiver, he may intelligently show the customer what to do to get good results. The servicing of defective short-wave receivers is, in comparison to this problem, of decidedly secondary importance.

As practically all broadcast receivers today are superheterodynes, and as practically all of the "all-wave" receivers now available to the public employ the superheterodyne principle at least for the short-wave bands, consideration will be given here to the superheterodyne type of receiver only; and since its operation is con-

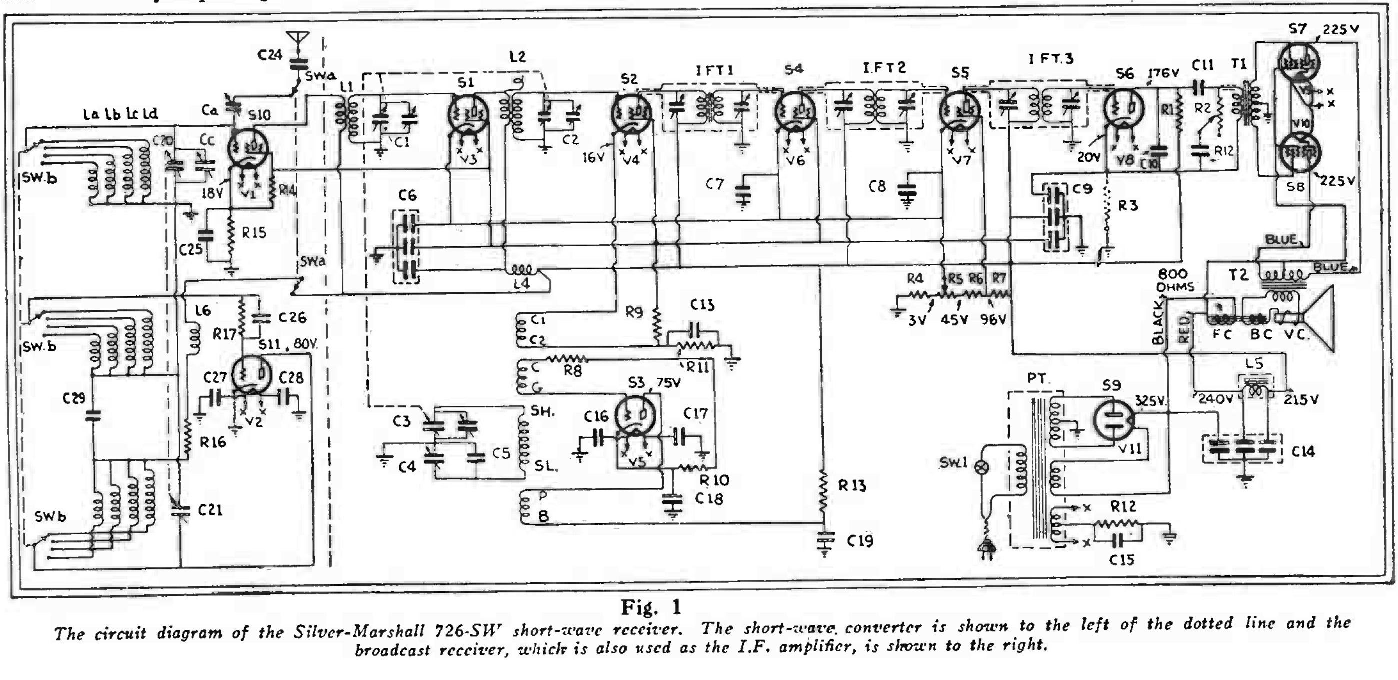

Fig. 1

The circuit diagram of the Silver-Marshall 726-SW short-wave receiver. The short-wave converter is shown to the left of the dotted line and the broadcast receiver, which is also used as the I.F. amplifier, is shown to the right.

siderably more critical on short waves than is that of a T.R.F. receiver with a short-wave superheterodyne "converter" ahead of it, the Service Man mastering the operating technique of a thoroughly good short-wave superheterodyne will be more than competent to handle the few rare cases where he is called upon to install or service a T.R.F. receiver with a short-wave superheterodyne converter.

Example of Receiver

As an example, the Silver-Marshall 726-SW short-wave and broadcast band superheterodyne has been selected, for it represents one of the sharpest of broadcast band superheterodynes now upon the market. This instrument is illustrated in Figs. A and B; the schematic circuit is shown in Fig. 1.

As shown in Fig. A, there are seven controls on the front panel —three knobs at the top, and four at the bottom. The upper left-hand knob is the short-wave band selector switch SWb, having four positions which select the 10-20, 20-40, 40-80, and 80-200 meter bands. Directly to its right is the short-wave tuning dial, and directly below this, the short-wave tuning knob.

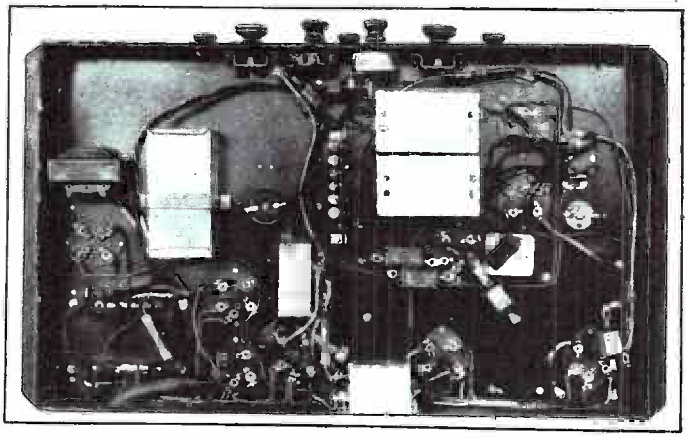

Fig. B

A photograph of the under-side of the Silver-Marshall Model 726-SW all-wave receiver.

At the upper-center of the panel is the short-wave trimmer, Cc in Fig. 1, connected in shunt to the short-wave detector V1 grid-circuit tuning condenser C20, to permit accurate alignment between the short-wave oscillator and detector circuits, it being impracticable to gang these with the same accuracy as on the broadcast band where no manually operated trimmer adjustments are necessary.

To the right of this trimmer knob is the broadcast band tuning dial, and directly below it, the broadcast band tuning knob. At the extreme upper right is the range selector switch (SWa in Fig. 1) which permits the choice of either the short-wave (10 to 200 meters) or broadcast (200 to 545 meters) range. The two lower-center knobs are: left, the tone control, equally effective on short-wave or broadcast bands; and right, the combined volume control and on-off switch, likewise effective on both bands.

Examining the circuit diagram of Fig. 1, the portion to the right of the vertical dotted line is essentially a broadcast band superheterodyne, consisting of a tuned R.F. stage V3, a first-detector V4, an oscillator V5, two 175-kc. I.F. stages V6-V7, a second-detector V8, a push-pull pentode output stage V9-V10, and the usual rectifier, V11. To the left of the dotted line is the built-in short-wave converter, consisting of a first detector V1, and oscillator V2.

When the receiver is to be operated on the broadcast band, the switch SWa is thrown to the right. In this position, one set of contacts connects the antenna directly to the primary of the broadcast band R.F. transformer L1 and to the plate of the short-wave first detector, although this is of no importance. A second set opens the plate circuit to the short-wave oscillator and the screen circuit of the short-wave first-detector rendering these circuits inoperative. The receiver is then tuned by the right hand dial, the volume and tone being controlled by the two lower-center knobs.

When the set is to be operated in the short-wave band, the switch SWa is thrown to the left, which connects the antenna to the grid circuit of the short-wave first-detector through the compensating condenser Ca and closes the plate circuit to the short-wave oscillator and the screen circuit of the short-wave first-detector. Selection of the proper short-wave range is then made by the SWb, at the upper left of the panel, which selects the proper first-detector grid coil and the proper oscillator plate and grid coils for the particular band desired. When the switches are in this position, the receiver is essentially the dream of old—a "double super"—in that two I.F. frequencies, rather than one, are employed.

When the broadcast band dial is set to some clear channel near 650 kc. (necessarily only between 600 and 700 kc.) the short-wave oscillator serves to heterodyne the received signal to this frequency (which is the first I.F. frequency) where it is amplified by what would be the R.F. stage and first-detector on the broadcast band, but in this case is actually the first level of I.F. amplification and second detector. By means of the second oscillator of the receiver, this 650 kc. I.F. signal is re-heterodyned to the second intermediate frequency, or 175 kc., where it passes through the main, or second I.F. amplifier of the receiver to the third, or power detector, and thence into the push-pull pentode output stage.

All of this may sound extremely complicated, but actually it is very simple, and the only problems encountered are due entirely to the extreme selectivity of the receiver—its selectivity is many, many times superior to that of the best short-wave receivers heretofore available, while its selectivity on the broadcast band is superior to that of any competitive superheterodyne the writer has yet had the opportunity to examine.

Let us suppose a customer has received such a set, that it has been installed in his home without any instruction as to its operation, and that he happily tries to tune in signals on his new possession. He will, first, probably try the broadcast band, if he has taken sufficient trouble to examine the control legend on the receiver panel to see what he is doing. He will have no particular difficulty in tuning in broadcast stations, although he may have some difficulty in getting satisfactory tone quality, for his first step will be, unquestionably, to turn the volume of the control well up before tuning the signal in, then reduce the volume, with very excellent chances of not having the signal properly tuned in, and by virtue of the extreme selectivity of the receiver, cutting out some of the necessary side-bands.

The thing for him to learn is that in tuning a superheterodyne, he must tune in his signal at any volume level he wishes, then reduce it by means of the volume control (and *not* under any circumstance by detuning) until the signal is just audible, after which he must re-tune the signal and adjust his volume to the level he desires. After he knows this (and it is doubtful if he does at first, unless the store salesman has driven it very firmly into his head—which is likewise improbable) he will, after tiring of the broadcast band programs, attempt to tune in some short-wave signals and this is where his fun will begin.

Tuning an SW Receiver

Having tuned in a number of broadcast stations without any difficulty, he will expect the same thing to happen on the short-wave end of the set, and after putting it into operation by throwing the necessary switches, he will gaily turn the short-wave tuning dial, only to hear nothing at all except a good background noise. After doing this several times over a period of a few hours, he will be thoroughly disgusted, will call up the store and tell them to send out a Service Man in a hurry, for the set won't work—or else he will tell the store to pick up the set—that he doesn't want such a "——— piece of junk." Whereupon the Service Man will probably be sent out to show him that the set really is not so bad after all and that all he needs to do is learn how to operate it. Needless to say, it is vitally essential that the Service Man know how to operate the set himself.

The writer can not impress too strongly upon the Service Man reading the foregoing paragraphs, the absolute necessity of implanting firmly in his mind the ideas they contain, for upon him falls entirely the success or the lack of success which his store will have in selling short-wave receivers, for whether or not they stay sold is dependent upon his ability to show the customer how to operate them and obtain satisfaction from short-wave reception. Once he has thoroughly implanted this in his mind to the extent where no amount of pressure will tend to alter his opinion of its importance, he may consider the more conventional servicing aspects of short-wave and broadcast band superheterodynes.

In the first place, a good short-wave receiver can not be tuned by the hit or miss method as may be done with a broadcast band set, for between 10 and 200 meters lie about twenty-eight times the number of channels that lie in the broadcast band and only a few of them are occupied by short-wave stations. The first thing, therefore, that the Service Man needs is a log with time schedule of both the domestic and foreign short-wave stations shown in Fig. 2, and a tuning chart for the set itself, indicated in Fig. 3. With these in hand, he approaches the receiver, makes certain it is operating properly on the broadcast band, throws the selector switch into the short-wave position, and attempts to tune in a signal. In order to do this, he first selects a station which he knows is operating, looks on the chart accompanying the receiver to find out at what position on the short-wave dial this station should come in, sets the broadcast band tuning dial somewhere on a clear channel between 600 and 700 kc., turns his volume control up, and "fishes" about the setting of the short-wave dial at which the station should be received. At first, he probably "fishes" hurriedly, but possibly hearing nothing, he sits down to a very careful tuning throughout a range of five degrees above and below the point on the short-wave dial at which the station is to be heard; if it is operating, the chances are that nine times out of ten he will hear it, or failing to hear it, he will hunt for another station on some other wavelength. As soon as he has tuned in a station, he turns the volume down and adjusts the short-wave trimmer between the two tuning dials until the signal is loudest. This done, he brings out his ever-trusty screw driver and, going behind the receiver panel, finds a small compression type mica condenser directly above the trimmer, Ca in the diagram. He then carefully adjusts this condenser, turning it in as far as possible without allowing its adjustment to cause any appreciable change in the setting of the trimmer on the front panel. In other words, it is his aim to increase the capacity of Ca as much as possible without allowing it to react upon the setting of the short-wave trimmer Cc, on the front panel. This done, the adjustment of the receiver is completed, and it is now only necessary to pay very careful attention to the tuning chart accompanying the receiver and to his log of short-wave stations, to make sure that the ones he hunts for are operating at that time. Some of them, of course, will be received with rather poor tone quality and he will have to explain to the customer that this is to be expected at certain times on some stations, but in general he will have no difficulty in tuning in a number of very satisfactory short-wave programs, in all probability including one or two foreign ones.

After doing this, the Service Man then takes the customer very carefully through the entire routine of tuning the short-wave portion of the set, making the customer, himself, perform each operation in order that he may thoroughly familiarize himself with the method of tuning the short-wave end of the receiver, and with the facts that it requires careful attention, a log of stations, a tuning chart, and a knowledge of whether or not the station sought is actually on the air at the time (for there are not so many short-wave stations on the air at all times of the day and night that they can be logged with the same ease as can the regular broadcast stations).

Having done all this, the Service Man points out that on some stations that are somewhat difficult to tune in directly with the short-wave tuning dial, a helpful vernier effect can be obtained by using the main, or broadcast band tuning dial as a short-wave vernier, this tending to shift the short-wave I.F. frequency in much smaller steps per dial division than the short-wave dial directly shifts the tuning frequency of the short-wave oscillator. Whether or not this vernier action of the broadcast tuning dial can be used is dependent of course upon whether or not there are several clear broadcast channels near the setting that is used for the broadcast band dials in short-wave reception.

Because of the extreme sensitivity of the receiver, local broadcast stations may be picked up without any antenna whatsoever and under favorable winter conditions, possibly even one or two distant ones, so that it is possible that there may not be a sufficient range of clear channels to allow the use of the broadcast band dial as a short-wave vernier. This, however, is improbable, for the receiver is very thoroughly shielded and only rarely will it be possible to pick up more than one or two broadcast stations without an antenna, although, because of its sensitivity, three or four feet of wire as an antenna will generally give extremely satisfactory results.

Incidentally, it is important for the short-wave portion of the receiver to be logged in order that the setting of the broadcast band dial always be the same whenever the receiver is being operated.

As the well-equipped Service Man will have provided himself with manufacturers' service bulletins covering receivers which he is called upon to service, there is little point in reviewing in general the procedure which will be necessary for each particular set. Nevertheless, to lay stress upon certain more important general aspects which are not often sufficiently forcibly stressed in manufacturers' service bulletins themselves should not be amiss.

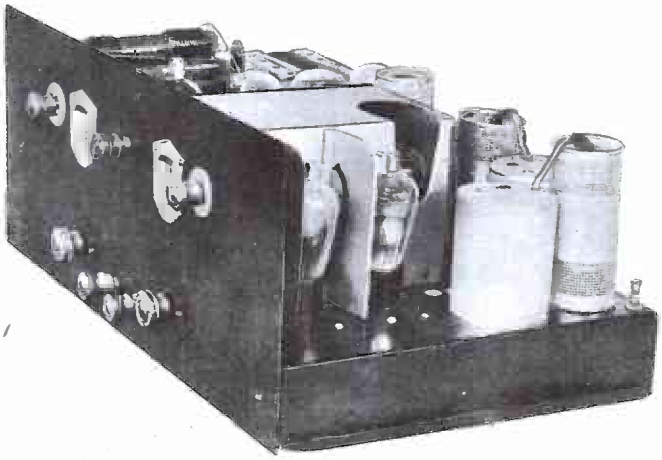

Fig. A

Servicing the Receiver

Considering the servicing of the 726 SW receiver, for instance, the procedure for the broadcast portion of the receiver will be gone about in the ordinary manner—that is, a test for the tubes and voltages in the receiver, a continuity test, the major portion of which would be obtained by the use of a set analyzer and tube tester, and the alignment procedure. In aligning a superheterodyne, it must be borne in mind that only by following one definite procedure will satisfactory results be obtained. This procedure involves, first, the alignment of the I. F. amplifier and, secondly, the alignment of the R. F. amplifier, first detector, and oscillator circuits. Other than to state that this is done in the conventional manner as described in many service bulletins with the aid of a small oscillator operating both in the broadcast band and the I. F. frequency, little need be said except in the specific matter of low-frequency oscillator alignment.

All Silver-Marshall service bulletins cover this process in a manner materially simpler and differing appreciably from that specified in most service bulletins. This method involves the alignment of the oscillator at the high frequency, or 1400 kc. point in the customary manner, but calls for the temporary substitution of an external condenser unit in place of the oscillator tuning section for 600 kc., or low-frequency alignment. This method has been covered in numerous articles by the writer, appearing in different radio publications in the past, and is specifically covered by Silver-Marshall service bulletins which are available, upon request, to all Service Men.

The matter of servicing the short-wave portion of such a receiver as the 726 is something that cannot be handled with ordinary test oscillators since they will not cover the frequency range involved, and it can therefore only be done at the present time by actual ear tests upon short-wave signals. However, if the broadcast band portion of the receiver is in satisfactory operating condition, there is little that can go wrong with the short-wave portion which cannot be located either by continuity tests or tests of fixed condensers by the customary charge and discharge method.

Fig. C

In general it may be said that the whole servicing problem of the short-wave portion of the short and broadcast band receiver involves nothing more than first ascertaining that the broadcast band portion of the receiver is functioning properly, making careful continuity, condenser, and tube tests on the short-wave portion of the circuit, and finally a careful ear test. In a word, servicing of short-wave receivers or the short-wave portion of combination receivers is appreciably more simple than that of servicing a good broadcast-band superheterodyne.

For the benefit of Service Men, the following operating characteristics, when the volume control is set at maximum, are given:

Filament potentials; V1, 2.2 volts; V2, V3, 2.25 volts; V6, 2.3 volts; V4, V5, V7, V8, 2.35 volts; V9, V10, 2.4 volts; V11, 5.1 volts. Plate potentials: V1, V3, V4, V6, V7, 216 volts; V2, 80 volts; V5, 75 volts; V8, 178 volts; V9, 224 volts; V10, 220 volts. Screen potentials: V1, V3. V4, V6, V7, 96 volts; V9, V10, 240 volts. Control-grid potentials: V1, 18 volts; V2, 0.0 volts; V3, V6, V7, 3 volts; V5, 1.1 volts; V8, 20 volts; V4, V9, V10, 16 volts. Plate currents: V1, 0.08-ma.; V2, 8 ma.; V3, V6, V7, 6 ma.; V4, V8, 0.1-ma.; V5, 10 ma.; V9, V10, 32 ma.

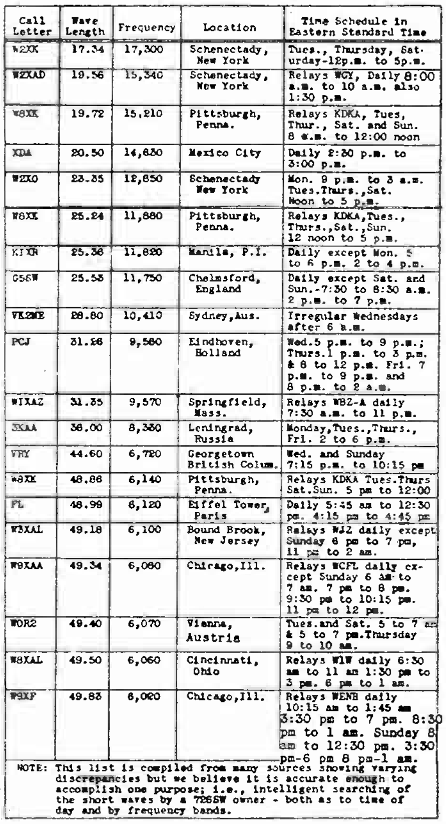

Call Letter	Wave Length	Frequency	Location	Time Schedule in Eastern Standard Time
W2XK	17.34	17,300	Schenectady, New York	Tues., Thursday, Saturday-12p.m. to 5p.m.
W2XAD	19.56	15,340	Schenectady, New York	Relays WGY, Daily 8:00 a.m. to 10 a.m. also 1:30 p.m.
W8XK	19.72	15,210	Pittsburgh, Penna.	Relays KDKA, Tues, Thur., Sat. and Sun. 8 a.m. to 12:00 noon
XDA	20.50	14,630	Mexico City	Daily 2:30 p.m. to 3:00 p.m.
W2XO	23.35	12,850	Schenectady New York	Mon. 9 p.m. to 3 a.m. Tues.Thurs.,Sat. Noon to 5 p.m.
W8XK	25.24	11,880	Pittsburgh, Penna.	Relays KDKA,Tues., Thurs.,Sat.,Sun. 12 noon to 5 p.m.
KIXR	25.36	11,820	Manila, P.I.	Daily except Mon. 5 to 6 p.m. 2 to 4 p.m.
G5SW	25.53	11,750	Chelmsford, England	Daily except Sat. and Sun.-7:30 to 8:30 a.m. 2 p.m. to 7 p.m.
VK2ME	28.80	10,410	Sydney,Aus.	Irregular Wednesdays after 6 a.m.
PCJ	31.26	9,580	Eindhoven, Holland	Wed.5 p.m. to 9 p.m.; Thurs.1 p.m. to 3 p.m. & 8 to 12 p.m. Fri. 7 p.m. to 9 p.m. and 8 p.m. to 2 a.m.
WIXAZ	31.35	9,570	Springfield, Mass.	Relays WBZ-A daily 7:30 a.m. to 11 p.m.
3KAA	36.00	8,330	Leningrad, Russia	Monday,Tues.,Thurs., Fri. 2 to 6 p.m.
VRY	44.60	6,720	Georgetown British Colum.	Wed. and Sunday 7:15 p.m. to 10:15 pm
W8XK	48.86	6,140	Pittsburgh, Penna.	Relays KDKA Tues.Thurs Sat.Sun. 5 pm to 12:00
FL	48.99	6,120	Eiffel Tower, Paris	Daily 5:45 am to 12:30 pm. 4:15 pm to 4:45 pm
W3XAL	49.18	6,100	Bound Brook, New Jersey	Relays WJZ daily except Sunday 6 pm to 7 pm, 11 pm to 2 am.
W9XAA	49.34	6,080	Chicago,Ill.	Relays WCFL daily except Sunday 6 am to 7 am. 7 pm to 8 pm. 9:30 pm to 10:15 pm. 11 pm to 12 pm.
WOR2	49.40	6,070	Vienna, Austria	Tues.and Sat. 5 to 7 am & 5 to 7 pm.Thursday 9 to 10 am.
W8XAL	49.50	6,060	Cincinnati, Ohio	Relays WLW daily 6:30 am to 11 am 1:30 pm to 3 pm. 6 pm to 1 am.
W9XF	49.83	6,020	Chicago,Ill.	Relays WENR daily 10:15 am to 1:45 am 3:30 pm to 7 pm. 8:30 pm to 1 am. Sunday 8 am to 12:30 pm. 3:30 pm-6 pm 8 pm-1 am.

NOTE: This list is compiled from many sources showing varying discrepancies but we believe it is accurate enough to accomplish one purpose; i.e., intelligent searching of the short waves by a 726SW owner - both as to time of day and by frequency bands.

Fig. 2

Domestic and foreign short-wave stations.

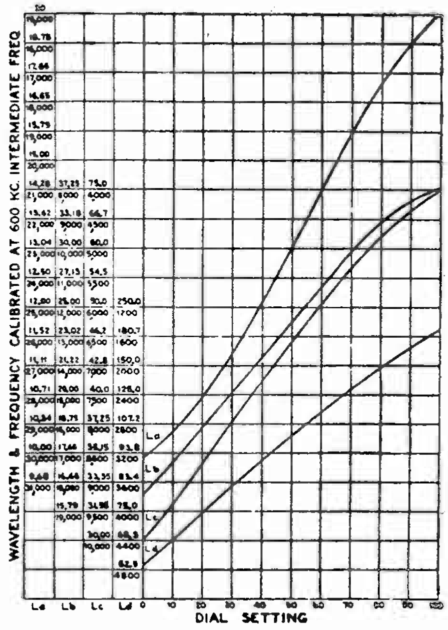

Fig. 3

Tuning graph of a particular short-wave set.

Parts List

The component parts of this receiver have the following values: Condensers C1, C2, C3, tuning units, 407 mmf. max. capacity; C4, 250-600 mmf. (variable); C5, 750 mmf.; C6, C7, C8, C15, C18, C19, 0.1-mf.; C9, 0.5, 0.5, 1, mf.; C10, C26, 0.001-mf.; C11, 0.15-mf.; C12, 0.25-mf.; C14, three 4-mf. (dry electrolytic, Potter); C16, C17, C24, C25, C27, C28, 0.006-mf.; C20, C21, 140 mmf. (two-gang variable); C22, 80 mmf., C23, comp.

Resistor R1, 30,000 ohms (1 watt); R2, 0.5-megohm (tapered variable resistor); R3, R9, R14, 60,000 ohms (1 watt); R4, R10, 100 ohms (wire wound); 4,500 ohms (volume control, tapered); R6, 13,500 ohms (1 watt); R7, 15,000 ohms (2 watts); R8, 400 ohms (wire wound); R11, R13, R16, R17, 10,000 ohms (1, 2, 2, 1 watts, respectively); R12, 220 ohms (2 watts); R15, 6,500 ohms (1 watt).

Coil L1, 167-S; 12, 168-S; L3, 175-S; L4, 281 (R. F. Choke); L5, 10145 (Choke); L6, 277 (R. F. Choke); La, S.W. coil 10-20 meters; Lb, S.W. coil 20-40 meters; Lc, S.W. coil 40-80 meters; Ld, S.W. coil 80-200 meters.

Transformer I.F.T1, type B-1; I.F.T.2, type B-2; I.F.H.3, type B-3; A.F.T.1, type A-270; A.F.T.2, type 10143; P. T., type 10173-S.

REPAIRING RADIOLA 25s

SINCE there are a number of the old R.C.A. "Model 25" supers scattered around, and since it has not been deemed practical for the average Service Man to open up the catacomb when any part of its interior goes wrong, I feel that some of my experiences with these might be worth noting.

I have found, quite often, that one of the A.F. transformers gives way—especially the primary of the last transformer. Some of the people who have lived with and enjoyed these old sets do not care to part with them; so I have replaced the audio transformers. The following applies, in this instance, to the last A.F. transformer but works equally well with the interstage one.

I took an R.C.A. audio transformer (ratio 3½-1) and, after cutting a hole through the front side of the catacomb can, directly in front of the last A.F. tube, I could readily solder the grid wire of the transformer to the grid terminal of this tube. I then connected the other secondary wire of the transformer to terminal No. 6 on the catswhisker back of the catacomb.

I then took a .002-mf. condenser; soldered one terminal of it to the catacomb can and connected the other terminal to the grid end of the secondary of the transformer, in place of the condenser connected in this circuit inside of the catacomb. I connected one of the primary wires of the transformer to terminal No. 14 of the terminal strip, back of the catacomb, and the other primary to No. 16 terminal. After making the above connections, I bolted the transformer in an external position on the oval metal frame holding the catacomb, in a position as near to the original one in the catacomb as I could. The set worked fine and there was no drop-off from volume or general efficiency that I could discern.

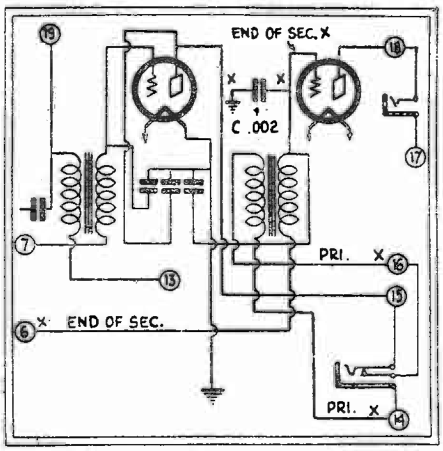

The Radiola "Model 25" is still popular with many users; transformer replacements may be made externally.

The points marked X are the ones to which I made connections as indicated. I have replaced both the A.F. transformers in like manner in different receivers. The first transformer would, of course, be connected to different terminals on the catacomb; but these are readily found by checking up on the terminal strip.

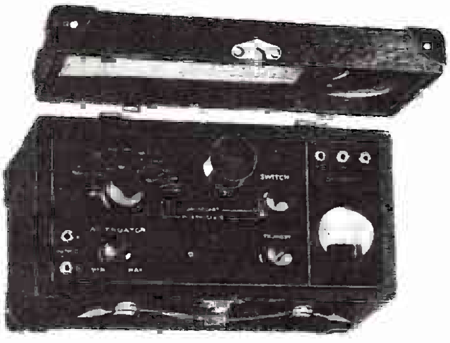

Fig. A
The Readrite No. 550 Service Oscillator.

SERVICING MODERN "SUPERS"

In this Interesting Article a Series of Tests Representing Actual Conditions Encountered by Service Men are Clearly Explained.

THE rapid march of progress in radio receiver design, calls for constant study on the part of the radio Service Man. Having mastered the technique of servicing the tuned-radio-frequency receiver, he finds himself facing newer and more difficult problems in connection with superheterodynes.

A receiver of this type that needs balancing and readjustment will lack selectivity; it will not bring in the distant stations that it should; and its dial readings in kilocycles are generally off more than 20 k.c. Quite often, there will be squealing and howling on certain sections of the dial, indicating that adjustments are necessary. Weak reception and poor selectivity at the high-frequency end of the dial, indicate incorrect adjustment of the oscillator "high-frequency trimmer"; at the low end of the dial, the need for "low-frequency trimmer" adjustment. It is useless to attempt to readjust a superheterodyne without correctly designed, accurate equipment.

Fortunately, the modern Service Man has at his disposal up-to-date, versatile test instruments, capable of handling any type of receiver no matter how complicated or advanced in design.

Those who have never used the modern equipment now available for this purpose will be amazed at its utter simplicity and at the ease with which all necessary readings and adjustments may be made. In performing the tests outlined in this article, using one of the new Readrite No. 550 audio-modulated R.F. oscillators (with panel output-meter), it was found possible to realign all the tuned circuits of a 9-tube Philco superhet. in but seven minutes,—from start to finish, including the removal and replacement of the chassis.

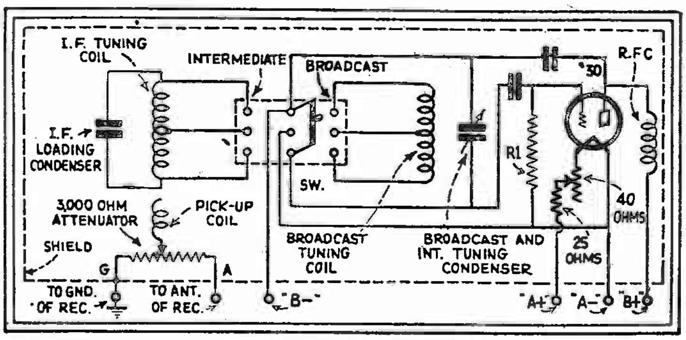

Fig. 1
Schematic circuit of the "No. 550" service oscillator. The value of R1 determines the frequency of the A.F. modulation

The tuning control of this service oscillator operates over two separate scales, which results both in wide divisions, and in accuracy. One scale is provided for the broadcast range, 550 to 1500 kc.; the other scale, for the I.F. band, 120 to 175 kc. Other intermediates, such as 260 kc., 262 kc., etc., are obtained by using the second-harmonic; and 475 kc. (for "all-wave" superheterodynes) is obtained by means of the third-harmonic. These harmonics give just as sharp signals, in this instrument, as the fundamentals. When testing 260 kc., using the I.F. band, the service oscillator selector switch is set at the "intermediate" reading of 130, resulting in a sharp second-harmonic signal.

Re-calibrating the Oscillator

To *re-calibrate* the No. 550 service oscillator, a procedure that may at times become necessary (due to mechanical jars, etc.), set its selector switch to the "broadcast" position, and tune to the wavelength of a signal from a crystal-controlled station previously selected on the radio receiver. If the reading of the oscillator dial does *not* check with the known figure for the station, make corrections on the auxiliary scale which is furnished especially for such comparison purposes. Proceed with other stations and settings of the oscillator, making notations of any changes. Should there be any appreciable changes in the broadcast range, it may be possible to determine the *cause* by comparing the hand-drawn scale with the one on the oscillator. (If the control knob has moved slightly on the shaft, this can be determined readily by comparing the hand-drawn and oscillator scales.)

After finding the correct calibration for the *broadcast* band, proceed to adjust the service oscillator's trimmer-condenser for the *intermediate* frequencies.

The first step is to select, on the radio set, a broadcast station of known frequency,—say, 700 kc. Next, turn the service oscillator selector switch to the "intermediate" position and again prepare to adjust its trimmer condenser.

With the radio receiver thus set at 700 kc., adjust the service oscillator pointer to an I.F. of 175 kc.; this will produce the fourth-harmonic of 175 kc. at the receiver setting for the broadcast station selected. Adjust the service oscillator trimmer condenser until the oscillator signal is received strongest with the oscillator pointer set at exactly 175 kc.; then proceed to make the same check with the receiver set for stations at 875 kc. and 1050 kc., these being exactly 175 kc. apart. The dial will now track when the oscillator knob is moved over the "intermediate" scale.

The Harmonic Chart may be referred to in calibrating at other intermediate frequencies. Thus, for calibrating at 260 kc., a broadcast station on 650 kc. is selected; this is the fifth-harmonic of 130 kc.

Adjusting a Philco Superheterodyne

The procedure to be followed in adjusting a Philco superheterodyne is representative of all superheterodyne receivers of the same general type.

The first step is to check the service oscillator and if necessary recalibrate it as outlined above, (especially at 175 kc. and 260 kc.), a fibre wrench is required.

The adjustment of the I.F. compensating condensers in this type of superheterodyne is performed as follows:

(1) Connect the G jack of the service oscillator to the GND terminals of the radio set;

(2) Connect the A jack of the service oscillator to the grid of the first-detector tube, with the tube shield in place and first-detector grid clip removed;

(3) Connect the output meter jacks to the primary of the receiver output transformer. (A Philco plug-in adapter may be used at the speaker socket to obtain this connection. Two tipped wires are furnished with the output meter for these connections);

HARMONIC CHART

Harmonic	Frequencies						
(1)	130	140	150	160	170	175	180
2	-	-	-	-	-	-	-
3	-	-	-	-	-	-	-
4	-	560	600	640	680	700	720
5	650	700	750	800	850	875	900
6	780	840	900	960	1020	1050	1080
7	910	980	1050	1120	1190	1225	1260
8	1040	1120	1200	1280	1360	1400	1440
9	1170	1260	1350	1440	-	-	-
10	1300	1400	1500	-	-	-	-
11	1430	-	-	-	-	-	-

Fundamental (1) and harmonic frequencies, in kc. Additional harmonics may be similarly calculated.

(4) Connect the power cord of the receiver to the electric power outlet, after all other connections have been completed;

(5) Turn on the radio set and the switch on the service oscillator, adjusting the tube filament power of the latter to about one-third normal;

(6) Turn the service oscillator switch to the I.F. band (making certain the switch is turned all the way);

(7) For Philco models of the "70" and "35" series, set the control knob of the service oscillator to the "130 kc." position (this being used for testing 260 kc.). For models of the '111," 11A (see RADIO-CRAFT Data Sheet No. 45, in the July, 1931 issue), "112," "90" and "51" series, the control knob of the service oscillator should be turned to the "175 kc." position. When adjusting sets with a "Normal-Maximum" switch, the switch should be placed at the "Normal" position;

(8) Turn the radio set volume control to maximum, and set the dial between 60 and 65 on the Philco scale. For maximum sensitivity the indicating needle of the output meter should not be allowed to go much beyond the center of the scale. To keep the output needle at this point, make use of the "attenuator" knob on the service oscillator;

(9) By means of the fibre wrench adjust the various I.F. condensers, one at a time, to obtain maximum reading on the output-meter. It is desirable to start with the last I.F. compensating condenser in the circuit (second I.F. secondary, in the model "112") and finish with the first. (It may be necessary, while the adjustments are being made, adjust the attenuator from time ot time, to keep the output meter readings within the scale range.) After these adjustments have been completed, remove the service oscillator connection from the grid terminal of the first-detector tube and restore the grid clip connection to the terminal.

The "coupling condenser," in the model "51" is adjusted at 175 kc. in the same manner as the I.F. condensers.

Balancing the Receiver's Oscillator

In adjusting the "high-frequency" trimmer condenser, in the set's oscillator circuit, make connection from the A jack of the service oscillator to the ANT terminal of the radio set, leaving all other connections the same as for the I.F. adjustments. The control knob on the service oscillator is set at "1400," with the switch turned from "intermediate" to broadcast." The dial on the receiver is set exactly at 140 (1400 kc.), with the volume control set at maximum. The service oscillator is turned on and its attenuator is again adjusted until a one-half scale reading is obtained on the output meter; if the receiver is badly out of adjustment this may be difficult to obtain, requiring the use of headphones in place of the output meter. The high-frequency trimmer condensor in the set is carefully adjusted for maximum reading on the output meter; or for maximum volume in the 'phones. After making the adjustment, turn the station selector slightly, noting whether any increase in volume can be obtained by this procedure. If so, then the R.F. and first-detector trimmer condensers must be adjusted (as described below), followed by a final readjustment at 1400 kc. of the set's oscillator high-frequency trimmer condenser.

The set's oscillator "low-frequency or "padding condenser adjustment is made with the same connections as when making the "high-frequency" adjustments. In this case, the Philco dial is set at 70, and the oscillator control knob at 700 kc. The low-frequency padding condenser is now adjusted for maximum reading in the output meter. If the service oscillator signal comes in stronger at a position off 70 on the set scale, adjust the padding condenser for maximum output on the meter at this "off kc." position of the set dial. Now retune the set slightly to obtain any further possible increase, adjusting the padding condenser and retuning the set dial each time so as to bring the point of maximum output as near 70 as possible. Then reset the set dial to exactly 140 and readjust the set's high-frequency trimmer condenser, since it is possible that the adjustment of the low-frequency padding condenser has affected the high setting of the dial, somewhat.

The adjustment of the R.F. and first-detector trimmer is done at 140 on the receiver dial, exactly as for its oscillator high-frequency trimmer adjustments.

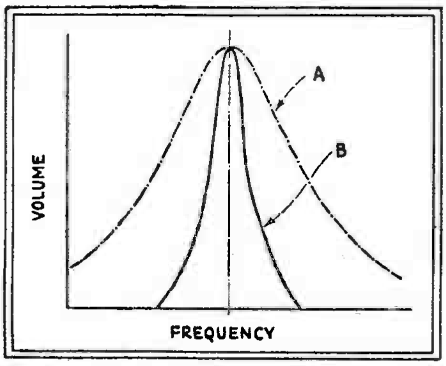

Fig. 1

The well-known curves of selectivity: A, that of a single circuit; B, that of three. The wider the bottom of the curve, the more opportunity for "cross-modulation."

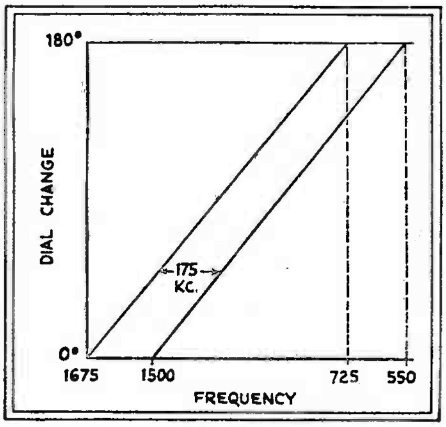

Fig. 2

The ideal (not actual) tuning curve of a superheterodyne — absolute straight-line-frequency variation with the oscillator 175 kilocycles above the detector tuner.

Single-Control Design for Superheterodynes

Some information on recent developments which will interest the constructor

SOME new facts concerning the superheterodyne circuit are still lacking in clarity, so far as the technician is concerned. It is the writer's purpose in this paper to cram as much information as possible into a few words; and the reader must bear up under the strain as we skip merrily from fact to fact.

In the normal broadcast receiver, two factors involving the term "selectivity" are encountered. First, we are concerned with simple or *numerical* selectivity, as determined by the relative "sharpness" of the individual tuned circuits involved, and their number (Fig. 1).

Also, since the adoption of the screen-grid tube, we have had to deal with a factor involving "cross-talk," or "cross-modulation" by a strong undesired local carrier. Where we are seeking to avoid "cross-talk," we are concerned with the numerical selectivity factor of the circuits ahead of the first R.F. tube's grid. Except in isolated neighborhoods, far from all broadcasters, it was fairly well established that one cannot expect freedom from the effects of cross-modulation if less than two tuned circuits precede the first tube.

Use of Variable Mu Tubes

The new "variable-mu" tube has, of course, changed this; and we may now operate successfully receivers with a single tuned circuit ahead of the first tube, or even with an antenna coupling of the untuned type, familiar to those who have worked with the early single-control receivers. It is certain that no receiver may be operated successfully in a congested area with an untuned antenna coupling, unless these new tubes are employed.

We are therefore concerned, in tuned radio-frequency receivers with selectivity of two kinds—or with one kind if we use the new tubes. Even though we employ the variable-mu tube with a superheterodyne receiver, we must consider the "image-frequency selectivity," of which you have probably heard, and to obtain which it is essential that the numerical selectivity ahead of the first detector be of a relatively high order.

The entire basis of superheterodyne operation is the fact that two oscillations may be combined to produce both sum- and difference-frequencies, and that one of the latter may be amplified in a fashion more economical than is usual with tuned R.F. receivers. In order to receive a 1000-kc. signal, we combine it with a local oscillation of 1175 kc. and amplify the resultant 175-kc. oscillation which (as the difference-frequency) is present in the mixing circuit. Note now that, should another oscillation differing from the local-oscillator by 175 kc. or from the desired station signal by 350 kc., be present in the mixer, modulator, or first-detector circuit, an undesired 175-kc. component (the "image frequency") will be fed into the I.F. amplifier. The magnitude of the signal required to produce this type of interference is small and, inasmuch as it is received ahead of the mixer circuit, no amount of numerical selectivity in the *intermediate*, 175-kc. amplifier stages will assist in ridding us of it. It is necessary, therefore, to include at least two tuned circuits ahead of the mixer stage in a superheterodyne receiver; even though we may employ the variable-mu tube to avoid the effects of "cross talk."

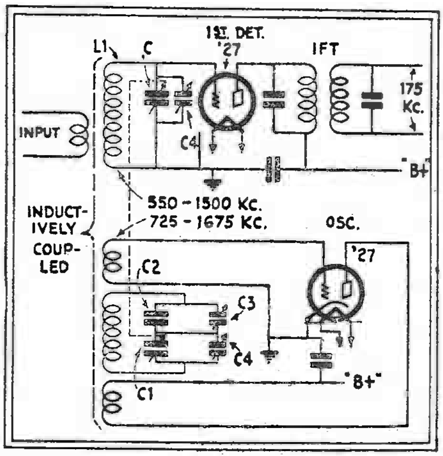

Fig. 3

Constants for single-dial tuning are given in the text.

Single-Control in the Super

In the original single-control superheterodyne receiver, single control was achieved by placing in parallel with one of the tuning condensers, or the oscillator condenser, a midget condenser which was varied by means of an eccentric cam attached to the main tuning shaft. This eccentric was cut to any shape necessary to the alignment of the circuits, but the cutting of these cams was a tedious process and hardly suited to production needs.

It then seemed probable that the use of straight-line-frequency condensers, with the inductance values in the tuning and oscillator circuits proportioned to give tuning curves separated by the desired beat-frequency, would produce the desired effect.

Unfortunately things are not quite so simple in practice, although the theory was perfect. The tuning curves of the oscillator and tuning circuits must be as shown in Fig. 2, and this relation must be held constant within exceedingly narrow limits.

In cases where the difference-frequency is low—that is to say, where the intermediate-amplifier stages are operated at some frequency below 100 kc.—the use of straight-line-frequency-condensers offers a solution to the problem. The stringent circuit requirements of the superheterodyne, however, demand a somewhat higher intermediate frequency; and we immediately run into difficulties in dealing with circuit capacities and small inductance variations, which begin to affect the efficiency of the system as the intermediate frequency rises. At 175 kc., a small variation in the total capacity of either circuit will result in a beat-frequency which is so far off, from that to which the intermediate amplifiers are tuned, that it causes a total loss of the signal.

We may, however, by a careful control of the inductance values and the stray capacities, employ a condenser having a specially-shaped rotor such that it gives a straight-line variation in oscillator tuning, in the manner illustrated in Fig. 2.

This is a strictly factory production proposition which requires fine control of all contributing factors, and is decidedly not for the home constructor. Some enterprising manufacturer might achieve fame and slight fortune by offering the fan a unit comprising condensers and coils calibrated at the factory. The fortune involved would be small compared with the fame—and fame is an asset of rather intangible value in these days of commercialism. The answer to the problem is given by the use of a network of the type familiar to those who have worked on the new supers or studied their circuit arrangements.

A Circuit-Balancing Arrangement

Fig. 3 shows the elementary arrangement of a mixer circuit to be employed in producing a beat of 175 kc., at all points in the tuning range, between an incoming signal and a local oscillation. The incoming signal may lie within the range from 550 to 1500 kc., and the range of the oscillator will vary at the same time over a range from 725 to 1675 kc. The theoretical considerations involved are too complex for review here, but it will suffice to say that a rule for the type of network shown in the circuit has been worked out experimentally. This states that, if the tuning condensers C and C1 are alike, and C2 is made just twice the value of C at its maximum setting, for an oscillator inductance 22% less than L1 (this value is not critical) the rate of change of the total capacitance in the oscillator circuit will be such as to give effectively the tuning curves outlined in Fig. 2. The two small variable capacities C3 and C4 are simply midget condensers of the usual type, which are employed in aligning the circuits at the high and low wavelength ends, respectively, of the tuning range.

The trimmer condenser C4, across the tuning section of the oscillator network, adjusts the minimum capacity of the system, and thus effects an alignment of the oscillator circuit at the high-frequency end of the range. The other trimmer C3, across the fixed condenser, serves to effect a similar alignment at the low-frequency end of of the spectrum. Tracking throughout the mid-range will be perfect enough to avoid any necessity for the use of a manually-operated trimmer while tuning.

Purity of Oscillations

It matters little what type of oscillator is employed, so long as its output is substantially free from harmonics and it will permit of changing tubes without serious disalignment of the circuits.

The circuit shown has been employed in one of the more recent commercial supers. The present writer claims sponsorship for the idea in the popular press, as it was used in the design of a signal generator described in *Radio Engineering* a year ago. The idea is not, however, original with him; for it was shown to him some years ago, and has been since employed in every oscillator he devised, because of the remarkable merit of the system, so far as frequency stability and harmonic output are concerned. This is particularly true in battery-operated sets where the changing voltages, due to running down of batteries, will seriously affect the frequency of oscillator circuits of the usual type.

The proportioning of the circuits is not difficult; the inductance of the oscillator coil being as specified by our empirical rule (about 22% less than the inductance of the tuning coils of the receiver proper), while the plate and grid coupling coils should be as small as will provide oscillation over the entire tuning range.

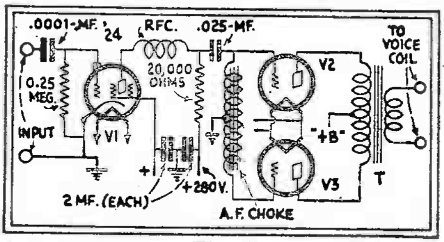

Fig. 4

A method of coupling designed to give good low-frequency quality, with a screen-grid detector feeding a push-pull stage.

A study of the superheterodyne receivers now on the market will show that it makes little difference where we tie in the local oscillation: it may be introduced into the grid circuit or the plate circuit of the first detector, or into the screen-grid circuit if a screen-grid tube is employed for mixing. Care should be taken that the magnitude of this locally-impressed oscillation is not so great as to overload the detector tube or otherwise distort its output.

Push-Pull with Screen-Grid Detector

It is commonly understood that the screen-grid tube will not give good quality when employed with transformer or inductance coupling at audio frequencies. The reason is that the tube's impedance itself is so high that it is difficult to work into a favourable inductive load at the lowest desired frequency, without having windings so bulky as to raise the distributed capacity to a point where the high frequencies are no longer passed. In the reception of radio programs, however, we are not concerned with frequencies beyond 5,000 cycles (as we are in talking-picture work), since the administrative regulations affecting broadcasting prohibit the transmission of frequencies above this figure. We may, therefore, by careful consideration of the design problems, so arrange a transformer or impedance coupling, out of a screen-grid tube, that we retain all the desired modulation frequencies. This is done by employing transformers or center-tapped chokes with relatively small windings, and so proportioning the inductance and the coupling capacity that we improve the coupling at the low-frequency end of the spectrum—say at 100 cycles—by resonance.

The basic principle of push-pull operation is that the currents affecting the respective grids are 180 degrees out of phase—that is to say, the voltage in one branch assumes its maximum positive value at the same instant that the voltage in the other branch is most negative. By using a center-tapped choke, as an "auto-transformer," the required phase reversal is obtained (Fig. 4).

Resonance at 100 cycles is obtained with the inductor shown (an Amertran "No. 641" A.F. choke having an inductance of 200 henries each side of the center tap) and a coupling condenser of approximately .025-microfarad. These values hold for any type of output tubes, V2, V3.

SUPERHET TROUBLE SHOOTING

A comprehensive discussion of the factors governing the theory and operation of superheterodyne receivers.

THE current popularity of the superheterodyne has brought the development of this highly efficient circuit to a point far beyond its status a year ago, with both manufacturers and builders; but, whereas the former have engineering staffs to keep them out of trouble, the man who builds his own finds many pitfalls along the road to success; which to the engineer, are comparatively easy to avoid.

It is the purpose of this article to endeavor to present solutions to many of these problems, together with an analysis of their causes, and what is more important, means of correcting them, in simple non-technical language.

Tracking

Probably the greatest mystery to the average layman is the "tracking" of the oscillator and tuning condensers. Assuming the frequency of the intermediate amplifier to be 175 kc., it is necessary for the oscillator circuit to be tuned at all times to a frequency 175 kilocycles *higher* than the R.F. circuits. (175 kc. lower would be equally good, but using a higher frequency is simpler from a constructional angle.) To illustrate the relation, a few points on the broadcast band are indicated as follows:

With the R.F. circuits tuned to	the oscillator must be tuned to
1500 kc.	1675 kc.
1250 kc.	1425 kc.
1000 kc.	1175 kc.
750 kc.	925 kc.
550 kc.	725 kc.
500 kc.	675 kc.

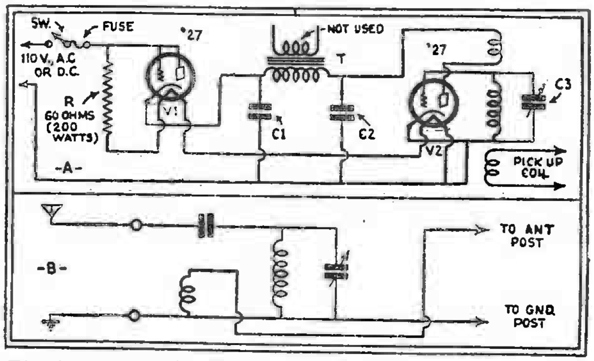

Fig. 2, above. *A simple oscillator suitable for superheterodyne servicing.*

Fig. 3, below. *A band-pass filter that may be attached to a radio set.*

The frequency to which a tuned-circuit resonates is a function of its inductance times its capacity, or LC. That is, a circuit with a .0005-mf. condenser and a coil of 200 microhenries, has an LC equal to .0005 times 200, or .1, and the circuit will tune to 600 meters; any change in the relative values of the coil or condenser, provided the other is changed oppositely, will result in LC remaining .1. A .00025-mf. condenser with a 400-microhenry coil or a .001-mf. condenser with a 100 microhenry coil would tune to 600 meters.

The LC product varies inversely as the square of the frequency. That is, for double the frequency, the LC drops to *one-quarter* its former value; for three times the frequency, LC is one-ninth its former value. Illustrating, if the LC for 600 meters (or 500 kc.) is .1, LC for 1000 kc. is .025, one-quarter as much; for 1500 kc. it is .0111, or one-ninth as much.

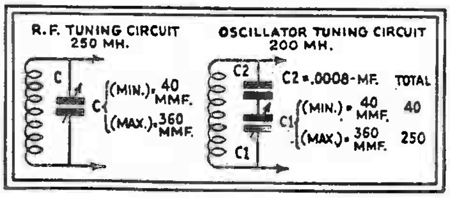

Fig. 1

Arrangement of tuning condensers in R.F. and oscillator tuning circuits.

With a single coil, then, to cover the band from 1500 to 500 kc. a condenser is required, which, including all stray capacities in the set, has nine times as much maximum capacity as its minimum.

At the same time the oscillator, covering the band from 1675 kc. to 675 kc. (which is only a tuning range of 2½ to 1) requires a maximum capacity equal to the *square* of 2½ (which is 6¼) times its minimum capacity. The reduction of the maximum capacity of one section of the variable condenser can easily be accomplished by inserting in series with this section a fixed condenser of such value as to reduce the maximum capacity to 6¼ times the minimum. Since the minimum varies considerably, this condenser is usually made so that it may be adjusted with a screw driver. See Fig. 1.

Because the highest frequency of the oscillator is 1675 kc. for tuning-in a 1500 kc. signal, and the minimum capacity of both tuning and oscillator condensers are about the same, the oscillator coil must be sufficiently smaller than the R.F. coils to make this 175 kc. difference at the zero setting of the dial. Figuring again with the same data (with the same capacity, the inductance changes inversely as the square of the frequency) it appears that the oscillator coil should be a little more than 80 percent of the inductance of the R.F. coils.

Aligning the Tuning Condensers

Now we come to the actual process of aligning the tuning controls. To do this properly, an oscillator of the simplest kind is required. A suitable one is shown in Fig. 2. C1 and C2 may be ordinary 1 or 2 mf. bypass condensers. C3 can be any .00035- or .0005-mf. variable condenser that may be in the "junk box." T is any filter choke, audio choke, or even the primary of an old audio transformer.

A modulated oscillator calibrated to 175 kc. is also an absolute necessity. Since this calibration must be very exact, it is hardly advisable for the experimenter to try to make this, but rather to either have one calibrated by a competent Service Man; to buy one of the many which are available for service work at a comparatively low cost; or to have the intermediate amplifier adjusted by a Service Man. The importance of exactly tuning the I.F. transformers to 175 kc. cannot be too strongly emphasized. The entire success or failure of the receiver depends upon this one point.

Now set the trimmers on the tuning condensers in about the center of their range; tune in a local station as nearly as possible to 1500 kc. and adjust the trimmers for maximum volume in exactly the same way as a T.R.F. receiver. If some of them tune too high or too low, change the oscillator trimmer up or down sufficiently, so that the R.F. tuning condensers will line up with it properly.

Tune in a station as near as possible to 550 kc. When it is brought in properly, take a small piece of wire and short circuit the oscillator section of the tuning condenser; the station will, of course, disappear. Now take the oscillator already described, and with one turn of insulated wire wrapped loosely around its coil, connect one terminal to the grid cap of the first detector. Do not make a physical connection between the wire and the oscillator coil, just wrap it *once* around the coil.

Rotate the external oscillator dial until the station is again heard. Now, leaving the oscillator condenser in the set shorted, take off the wire leading to the external oscillator and turn the latter off. Do not touch the tuning dial on the set. Take the short off the oscillator condenser and readjust its padding condenser until the station again comes in at maximum volume.

Now, retune the set to a 1500 kc. station, or as near to it as possible. Readjust the trimmers on the R.F. condensers, do not touch the trimmer on the oscillator condenser, only very slight adjustments of the R.F. trimmers should be necessary here.

If the above instructions have been carried out properly, the set should now be in perfect alignment at all points on the dial, and changes in the trimmers at any point on the dial should not be necessary.

Poor sensitivity on one end of the band, as compared to the other end, or on both ends as compared to the middle, is almost invariably a sign of improper tracking, and can be corrected by making the adjustments already described. Lack of sensitivity all over the band, provided all other things are correct, is usually an indication that the intermediate transformers are not tuned accurately. As already stated, the adjustment of the intermediates to exactly 175 kc. is of extreme importance.

"Birdies"—sounds like a regenerative receiver passing stations at various points on the band—are caused either by the intermediates being tuned to some frequency other than 175 kc., or by insufficient selectivity in the R.F. tuning circuits. An easy way to find which is the cause is to short the oscillator tuning condenser, and then rotate the dial with the volume control turned well up. Under these conditions, no stations should be heard, in fact the receiver should be absolutely silent. If stations *are* heard at some points, without the oscillator tube operating, it is a certainty that the intermediates are not tuned properly. If the set is silent without the oscillator working, but whistling "birdies" are heard when it is working, the selectivity of the R.F. stations is insufficient. The simplest way of correcting this is to use a much shorter antenna, or to remove turns from the primary of the antenna coil. A very small condenser, of the order of .0005-mf., (a midget variable will do) inserted in the antenna lead, will very often eliminate the whistles without appreciably cutting down the sensitivity of the set.

Occasionally, on some supers, there will be found repeat points about 350 kc. off the proper place for a station. There are two remedies for this—either those already described for "birdies" (which will usually be found on sets having the repeat points) or by improving the shielding of the set from direct pickup; as, for example, mounting a set which has the chassis unshielded on the bottom, on a metal plate, so that the bottom will be shielded. Covering the top of the chassis with a grounded metal plate, so as to shield the variable condenser sections and grid caps is often very helpful.

Microphonic audio howls will be found troublesome in some imperfect supers, and the builder, naturally attributing it to a bad tube, will hunt in vain for the tube that is causing the trouble. Actually, the howl may be caused by vibration in the plates of the variable condensers. It can usually be cured by mounting the entire chassis on a piece of sponge rubber, allowing the entire chassis to vibrate, instead of just the condenser plates.

Some sets will have ample selectivity so far as music is concerned, but on a station next to a powerful local, the loud notes of the local will "carry over" with a kind of scratching blast. This is a sign that the local is modulating a band more than 10 kc. wide, and inasmuch as the trouble originates in the air, it cannot be completely eliminated. It can, however, be considerably ameliorated by the addition of a band-pass stage (see Fig. 3) ahead of the tuner. This will reduce the amount of signal from the local that reaches the grid of the first R.F. amplifier tube, but will not seriously affect the strength of the signal from the station to which the set is tuned.

Some sets will be found which work very nicely over a portion of the band, usually the high frequency end, but which stop working entirely on other portions. This is caused by the oscillator tube having incorrect voltages, so that it stops oscillating in spots. A check-up of the voltages supplied to the oscillator tube, and the correction of these (if incorrect) will usually fix the trouble. Sets using dynatron oscillators are particularly subject to this trouble. In this case, trying out several tubes will result in one being found which will work properly over the whole band. Many '24 tubes will not oscillate at all as dynatrons, although they will function perfectly as detectors; and almost all tubes, so used, require very accurate settings of the screen and plate voltages to oscillate over the entire band.

Occasionally, a set will be found which has perfect quality on full volume, but when reduced, the quality "goes to pieces." If this is the case, examination of the tubes will probably disclose a '24 in a socket where a '35 or '51 should be. Proper placement of the tubes will make this right. This trouble applies to T.R.F. sets only; the use of a '24 in an amplifier socket in a set built for the multi-mu tubes will invariably produce this phenomenon.

No reference has been made here to account for poor results due to improper connections, wrongly placed parts, or similar troubles which would apply to any receiver. It is presumed that the correct hookup has been followed throughout, and the receiver is free from all defects in wiring, parts, or similar mistakes on the builder's part.

I. F. Transformer Coil Design

The "how" and "why" of intermediate-frequency transformer construction

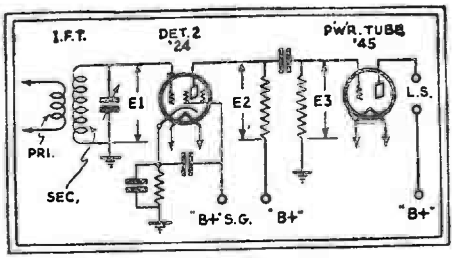

Fig. 1
Elementary circuit of a typical I.F. amplifier.

THE increasing interest in superheterodyne receiving circuits from the home constructors' and experimenters' angle has made more plaintive than ever that old refrain—"How many turns should I wind on an intermediate-frequency transformer?"

The author will endeavor to supply such information as is necessary to enable the builder to design and construct coils which will be as good as, if not superior to, any on the market.

A discussion of the advantages of a particular frequency, such as 175 kc., over that of, say, 45 kc., is not within the province of this article. There are many reasons set forth by engineers as to the respective merits of the various intermediate frequencies of their choice, but today we find that for ordinary broadcast reception the 175-kc. band has become more or less standard. For short-wave "superhets," other frequencies (some within the broadcast band) are used; so the tables which are given in this article, for those who are not so mathematically inclined, include all frequencies from about the center of the broadcast band to the old stand-by frequency, 45 kc.

Three of the most important factors to be taken into consideration in the design of I.F. transformers are:

1. The sensitivity required to obtain the required power output from low signal inputs;
2. The degree of selectivity necessary per stage to give a satisfactory over-all selectivity in the receiver; and
3. Mechanical and cost considerations such as chassis size, coil-shield size, number of tubes, etc.

An examination of the factors listed above will lead us to believe that there is more to the design of an I.F. transformer than the mere selection of a coil with a given diameter and wire turns plus a resonating capacity.

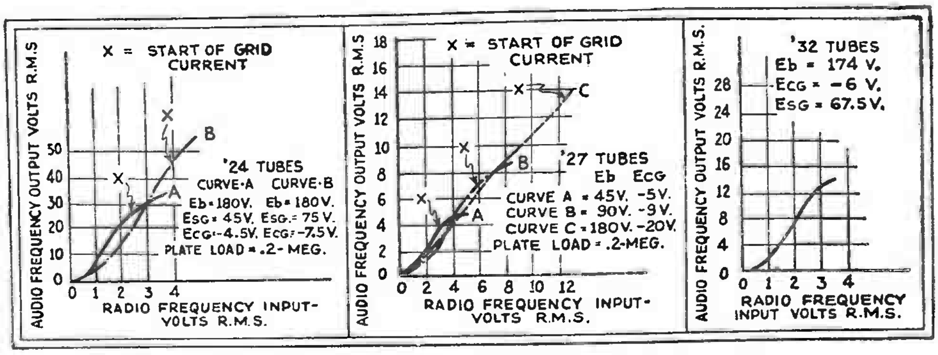

Fig. 2, left. *Curves showing the possible gain that may be expected from a '24 tube.*
Fig. 3, center. *The same curves as in Fig. 2, only for a '27.*
Fig. 4, right. *Same as for Figs. 2 and 3 but for a '32.*

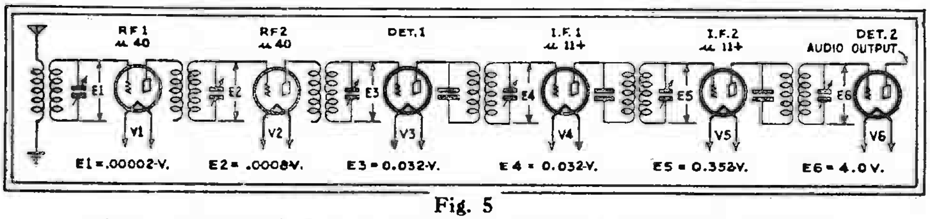

Fig. 5

An elementary circuit illustrating how a signal is amplified through an amplifier.

Design Considerations

The logical way to design our coils is, first, to determine the required degree of sensitivity. If we know the total over-all gain required for a given output, we can ascertain the required gain per stage. We shall have a fair idea of the grid swings on successive stages at full power output, which will enable us to design our circuits for minimum tube distortion and maximum selectivity and stability. The solution of the 1st factor listed will be a guidepost in the determination of factors 2 and 3.

Instead of using the level of 50 milliwatts output, we shall use the rated power output of the tube or tubes as indicated in the various tables supplied by tube manufacturers.

If the power tube selected is of the '45 type, the power output will be 1600 milliwatts at the maximum rated voltage. This means that if we want a power output of 1.6 watts (1600 milliwatts) to be fed into the speaker, the input signal voltage on the grid of the '45 must not be greater than 50 volts peak (the value of the grid bias). Any increase of voltage on the grid will be the cause of undesirable distortion and, of course, must be avoided. It is best to use R.M.S. values in calculating the various signal voltages, and as the R.M.S. voltage of 50 V. is .707 x 50 = 35.35 volts, we find that the R.M.S. value which can be applied to the grid of the '45 is 35.35 volts.

Most radio sets today feed the audio output of the detector into the grid of the power tube by means of resistance coupling; in this case, the detector will have to deliver 35.3 volts to the grid of the output tube.

Preliminary Calculations

Figure 1 shows the circuit of a power detector, resistance-capacity coupled to the output tube, and we find that in the case of a screen-grid detector and a '45, E3 will be 35.35 R.M.S. volts. No gain can be expected from the resistance-capacity unit so that the voltage at E2 must also be 35.35 volts. Figs. 2, 3, and 4 show the possible audio output of three standard tubes used as second-detectors in "superhets." These curves show the A.F. output volts (R.M.S.) of the '24, '27, and '32 tubes plotted against the R.F. input volts (R.M.S.) and are very useful in view of the fact that they give us the required operating potentials for these tubes used as detectors and the required R.M.S. values of the incoming signals to "kick" the power tube. Figs. 2 and 3 also show the points where grid current will start due to overloading of the grid by the incoming signals.

Referring to Fig. 2, we find that a signal of 3.24 (R.M.S.) volts is necessary on the grid of the '24 detector to fulfil the requirements of the '45 for maximum power output. The signal on the grid should not exceed 4 volts R.M.S. or the grid will draw current, thus causing distortion. In the case of the '27, Fig. 3, we find that it would require an R.F. input of 12 volts to deliver an A.F. output of 13 volts. This tube will not satisfy the condition of maximum power output unless a high-primary-inductance A.F. transformer, with a turns ratio of at least 3.5 to 1, is used. A bad feature of such a tube is the fact that grid current starts to flow at about 12.5 to 13- (R.M.S.) R.F. volts. Under all conditions, it is advisable to work the tube at some value below that which causes the flow of grid current.

If it is desired to use a pentode as the output tube with a screen-grid second-detector, we find that an R.F. signal input of less than 2 volts will be sufficient to deliver a power output of 2.5 watts.

If push-pull circuits are used in the output stages, the A.F. signal voltages will have to be doubled and, as the output of the detector cannot be increased without severe distortion, it is necessary to add an additional A.F. stage so as not to overload the detector.

Calculation of Gain

Having determined the minimum R.F. voltages which must be supplied to the grid of the detector to deliver the maximum power output, we are in a position to determine the total gain which must be obtained from the I.F. amplifier.

Modern radio receivers of the superheterodyne type have an input sensitivity of less than 5 microvolts per meter and, with the standard height of the antenna set at 4 meters, we find that the absolute sensitivity will be about 20 microvolts (a microvolt being one-millionth of a volt). Thus, if we desire a receiver (as shown in Fig. 1) that will deliver about 4 volts of R.F. signal to the detector from an input signal of 20 microvolts, the total voltage gain of the amplifier will be

$$\frac{\text{R.M.S. volts on grid of detector}}{\text{R.M.S. volts input from antenna}}$$

$$\text{or } \frac{\text{4 volts}}{\text{.000020-volt}} = \text{200,000 gain.}$$

As a certain amount of amplification can be, and is, obtained by one or more stages of conventional T.R.F. ahead of the modulator tube (first-detector), it is not absolutely necessary that the entire burden of amplification be borne by the I.F. amplifier. If there are two stages of T.R.F. ahead of the modulator, then there will be a voltage gain of about 1500 (assuming a

TABLE I

"TURNS-PER-INCH" of INSULATED WIRE

B. & S. Gauge	DCC	SCC	DSC	SSC	Enam.	Enam. and SCC	Enam. and SSC
14	13.7	14.6	14.7	15.0	15.2	14.2	14.7
15	16.0	16.2	16.4	17.0	17.0	15.8	16.5
16	16.7	18.0	18.2	19.0	18.7	17.6	18.4
17	18.5	20.0	20.0	21.2	21.4	19.5	20.5
18	19.6	22.3	22.3	23.6	24.0	21.7	22.9
19	22.5	25.0	25.2	27.0	27.2	24.2	25.8
20	24.5	27.5	27.5	29.5	30.1	26.5	28.4
21	27.5	30.8	30.8	32.8	33.6	29.6	31.5
22	30.0	34.0	34.0	36.6	37.7	32.7	35.0
23	32.7	37.5	37.5	40.7	42.3	36.1	39.0
24	35.5	41.5	41.5	45.3	47.2	39.7	43.1
25	38.5	45.7	45.7	50.3	52.9	43.7	47.9
26	41.8	50.2	50.2	55.7	59.0	47.8	52.8
27	45.0	55.0	55.0	61.7	65.8	52.1	58.1
28	48.5	60.0	60.0	68.3	73.9	57.0	64.4
29	52.0	65.5	65.5	75.4	82.2	61.9	70.6
30	55.5	71.3	71.3	83.1	92.3	67.4	77.9
31	60.0	77.3	77.3	91.6	103.0	72.8	85.3
32	62.7	83.7	83.7	101.0	116.0	79.1	93.9
33	66.3	90.3	90.3	110.0	130.0	85.6	103.0
34	70.0	97.0	97.0	120.0	145.0	91.7	112.0
35	73.4	104.0	104.0	131.0	164.0	98.8	123.0
36	77.0	111.0	111.0	143.0	182.0	105.0	133.0
37	80.3	126.0	126.0	155.0	206.0	113.0	146.0
38	83.5	133.0	133.0	168.0	235.0	120.0	157.0
39	89.7	140.0	140.0	181.0	261.0	128.0	172.0

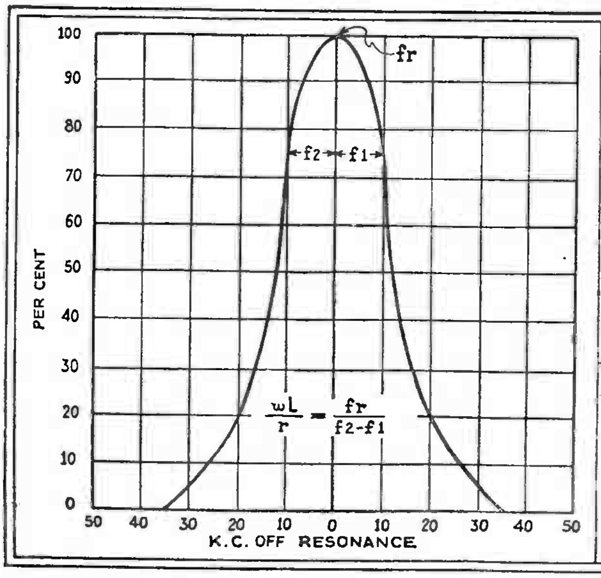

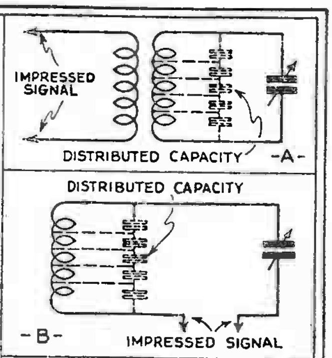

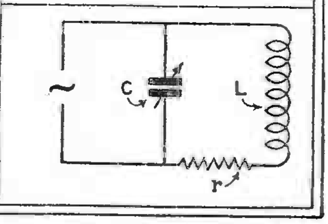

Fig. 6, upper right. *Circuits illustrating the effects of distributed capacity.*

Fig. 7, lower right. *Circuit illustrating the effects of coil resistance on a tuned circuit.*

Fig. 8, left. *Curve showing how the "Q" of a coil may be computed.*

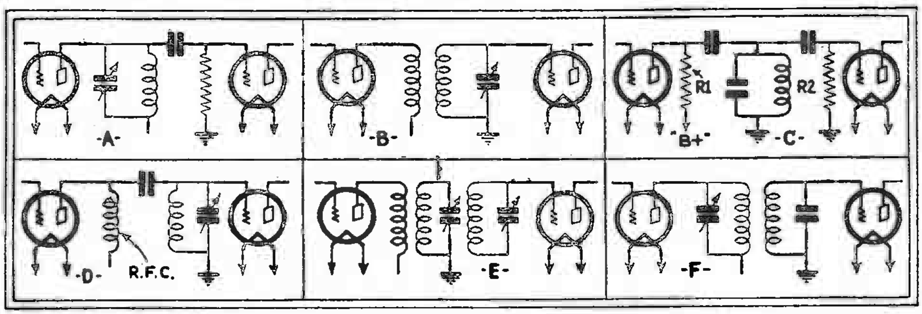

Fig. 10

At A, B, C, D, E, and F are shown the various methods of coupling I.F. amplifiers.

gain of about 40 volts per stage) which must be considered in designing the I.F. amplifier. The reader will recognize the necessity of using pre-amplification before the modulator as this phase has been covered in many excellent articles on the subject.

Now, let us see just what the final figures will be with the added gain obtained in the pre-amplifier.

If the input to the receiver is .00002-volt and the pre-amplifier has a gain of 1500, then the input to the first I.F transformer will be .00002 x 1500 or .03-volt. The 4 volts required by the detector, divided by the .03-volt input to the I.F. amplifier, will then be the voltage gain required by the I.F. amplifier, which is 133.3 volts.

As it will be impossible to obtain a gain of 133.3 in a single intermediate stage, it will be necessary to use two stages working at a gain of about 65, or three working at 44 per stage.

In the example cited above, the amplification due to the modulating tube is ignored, as various conditions develop which cause the gain of this portion of the circuit to vary over wide ranges. The sensitivity and output will be affected by the strength of the received signal, by the power output of the local oscillator, and by any change in operating potentials which may take place as the receiver is functioning.

The check for the correctness of the calculation can be made by multiplying the gain in the pre-amplifier by the gain in the I.F. amplifier; thus, 1,500 x 133.3 gives a value of 199,950.

Figure 5 shows a skeleton circuit with the voltages developed in the various circuits. Two stages of I.F. amplification are shown and, as each stage is not working at the maximum possible gain, the I.F. amplifier will be very stable and the coils easy to design.

If an actual condition exists where the gains and voltages are measured and found to be as indicated in Fig. 5, the volume control on the pre-amplifier end of the receiver will be full on and the gain on the I.F. amplifier cut away down.

If the pre-modulator amplifier is limited to one stage, it will be necessary to increase the gain of the I.F. amplifier if the same level of sensitivity is to be maintained.

Unlike the conditions which exist in T.R.F. amplifiers (where the limitations of the minimum and maximum capacity range of the tuning condenser, plus the unavoidable circuit capacities, define the maximum ratio of the tuning inductance to its tuning capacity), we find that the tuning circuits of I.F. amplifiers are not limited as stated above, and the ratio of L to C can be any ratio desired, within sensible limits

Inductance Design

Thus, the inductance of the I.F. transformer can be made as large as desired; the limitations being defined by the R.F. resistance and the physical size of the coil and associated shield. As the frequency of the I.F. amplifier is generally lower than the broadcast-band frequencies, the effect of the circuit and coil capacities can be neglected for the moment as any calculation which we shall make will generally assume that the signal is fed into the tuned circuit by induction in the coil itself. In Fig. 6A, we find that the distributed capacity of the coil shunts the tuning condenser and is simply added to the circuit; in Fig. 6B, the signal is in series with the coil.

Calculation of Load Impedance

To obtain the greatest percentage of the "mu" of a vacuum tube, it is necessary that the load in the plate circuit be as large as possible.

The effective impedance of the tuned circuit at resonance (Fig. 7) is equal to

$$Z = \frac{L^2 W^2}{r} = \frac{L}{C r}$$

where L = the inductance of the coil,
W = 6.28 times the frequency f,
r = the series high resistance of the coil,
C = the capacity necessary for resonance.

It will be noted that the effective impedance increases as the square of the inductance; so, provided we keep the R.F. resistance of the coil low, a large inductance will be superior to a small one.

In such a tuned circuit, the selectivity S will be proportional to

$$S = \frac{WL}{r}$$

and the width of the resonance curve, Fig. 8, at a point where the response is .707 times the value at resonance, is related to the ratio

$$S = \frac{WL}{r} = \frac{fr}{f_2 - f_1}$$

giving another valid reason for using a coil as large as possible. A handy rule to use in the design of such circuits is that

$$\frac{WL}{r}$$

should be less than 250, for if the ratio of the inductive reactance of the coil to the R.F. resistance is greater than 250, there will be marked attenuation of the higher audio frequencies in the detector output.

The condition of resonance is the same, no matter what the frequency may be, and the old L.C. chart is as useful as ever; as it gives the L.C. constants for all frequencies between 1000 and 42 kc., thus taking in all of the frequencies used in I.F. amplifier design.

Design of an I.F. Transformer

Most of the readers will be interested in 175-kc. intermediates, so a design will be developed for this frequency.

Examination of such a chart shows that 176.5 kc. is the nearest frequency to 175 kc. and will be satisfactory for our purpose. The L.C. constant for this frequency is 813 when the inductance and capacity are ex-

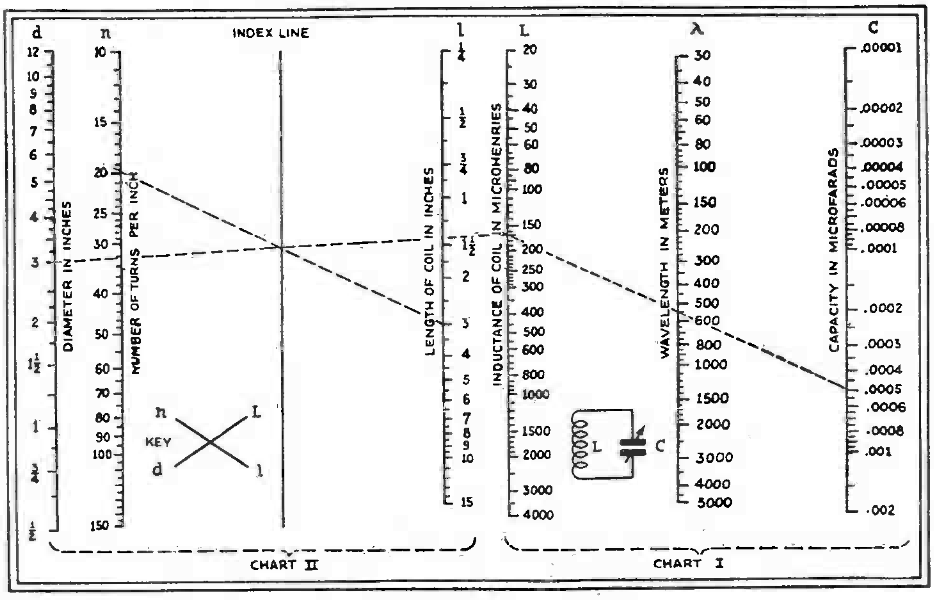

Fig. 9

An automatic coil-condenser calculator. Knowing the value of either a coil or a tuning condenser, the other may be determined, for any wavelength by reference to the chart.

pressed in centimeters (1000 centimeters equal one microhenry) and microfarads, respectively.

The RADIO-CRAFT readers, who have followed the articles by this author on the calculation of R.F. coils in previous issues, will be familiar with the method involved in determining the values of the inductance and capacity by the process of dividing one known value, either L or C, into the L.C. constant to derive the other.

There are several types of semivariable condensers with capacity ranges running up to 140 mmf., which could be shunted with a good grade of fixed condenser to increase the maximum value of capacity if desired. Earlier, we discussed the added gain to be obtained by the use of a large inductance provided the R.F. losses of the large coil did not affect the resultant amplification and selectivity.

TABLE II.

Wire Size	No. of Spokes	No. of Turns	Inside Diam..	Frequency Range
SPIDEBWEB I.F. Coils				
No. 24 d.s.c.	15	62	1 3/4 in.	1764-500 kc. (170-600 m.)
No. 20 d.c.c.	17	46	2 in. (no form)	2540-566 kc. (118-529 m.)
No. 24 d.c.c.	11	50	1 1/2 in.	2630-565 kc. (114-529 m.)
BASKETWEAVE I.F. Coils				
No. 18 enam. d.c.c.	13	58	2 5/8 in. bet. peg centers	2361-500 kc. (127-600 m.)
No. 18 d.c.c.	14	60	4 1/8 in. bet. peg centers	2290-550 kc. (131-545 m.)
No. 24 d.s.c.	15	64	2 1/2 in. bet. peg centers	2054-495 kc. (146-605 m.)
DIAMONDWEAVE I.F. Coils				
No. 26 d.s.c	15	57	2 1/8 in.	2040-495 kc. (147-605 m.)
No. 20 d.c.c.	21	36	2 3/4 in.	2650-694 kc. (113-432 m.)
No. 24 d.c.c.	15	44	2 3/8 in.	1764-560 kc. (170-535 m.)

Winding data for three types of coils.

So, for the tuning capacity, let us select a unit with a maximum capacity of 140 mmf. and see just what inductance will be necessary to tune to 176.5 kc. As

$$L = \frac{LC}{C},$$

$$L = \frac{813}{.000140} = 5{,}800{,}000 \text{ centimeters}$$

and as 1000 centimeters equal one microhenry, we require an inductance of 5,800 microhenries. Now 5,800 microhenries is considerable inductance to put in a small space, but a good coil can be had by using any of the commonly-known methods of winding, such as diamond weave, duolateral, honeycomb, etc. Most of us do not have the equipment on hand to wind a coil in this manner, so it would be practical for us to increase the size of the tuning condenser to .0005-mf. so that we could reduce the inductance to a lower value. Semivariable condensers of compact size can be obtained in ranges up to .001-mf. and are satisfactory for I.F. circuits. With the new capacity of .0005-mf., we find

$$\frac{813}{.0005} = 1{,}626{,}000 \text{ centimeters,}$$

or 1,626 microhenries.

By reference to the chart in Fig. 9, we can determine a coil which can be hand wound at home.

By connecting three known or assumed values as per the key, we find that a coil wound on a 2-in. diameter cylinder 3 ins. long, having 120 turns per in. for a length of 2 ins., or a total of 240 turns of No. 34 S.S.C. wire, will have an inductance of 1,625 millihenries. A coil made up in this size can be placed in a shield, providing that the distance from the coil to the shield is at least 1½ ins. all around. Under these conditions, it will be necessary to add 20% to the inductance of the coil to compensate for the loss due to the effect of the shield.

A wire table is given in Table II for the convenience of the reader and takes in all of the commonly-used sizes and coverings.

The impedance of the combination is equal to

$$Z = \frac{L^2 W^2}{r} = \frac{L}{Cr}$$

$$= \frac{.0016}{.000{,}000{,}000{,}5} \text{ x } \frac{1}{32} = 100{,}000 \text{ ohms.}$$

The resistance r is assumed to have a value of 32 ohms.

Selecting the Circuit

With the solution of the effective impedance of the tuned circuit at the resonant frequency, we can select the circuit in which the coil and condenser are to be used. Fig. 10 gives several possible variations, all incorporating the tuned circuit with its impedance of 100,000 ohms at 175 kc. A in Fig. 10 is the old tuned-plate type of R.F. circuit and, if used with tubes whose internal impedances (Rp) are less than 100,000 ohms, will not tune sharply. B in Fig. 10 has a primary design to match the tube Rp if possible and has a definite voltage gain when used with low-impedance tubes. The circuit in C, Fig. 10, is not used as the losses due to the shunting effect of R1 and R2 reduce the effective load in the plate and will not be selective. In D, Fig. 10, the plate circuit is loaded by the choke R.F.C. and the signal is passed to the tuned circuit through the coupling capacity. A circuit which is used in A.K. superheterodynes is shown at E, Fig. 10. Here two tuned circuits are used to increase selectivity.

I.F. IN KC.	SEC. TURNS	TYPE OF WINDG. SIZE	TYPE OF WINDG. NO. OF LAYERS	TUNING COND. IN MF.	PRIMARY TURNS TUBE NO. 1	2	3	4
45	630	NO.32 ENAM.	7	.001-	180	165	315	450
75	400	NO.30 "	5	.001-	114	105	200	285
100	400	NO.30 "	5	.00065-	114	105	200	285
150	213	NO.28 "	3	.001-	60	56	106	152
200	213	NO.28 "	3	.0005-	60	106	56	152
250	213	NO.28 "	3	.00025-	60	106	56	152
300	112	NO.28 "	1	.001-	32	29	56	80
500	112	NO.28 "	1	.00035-	32	29	56	80

Transformer data for circuit B, Fig. 10.

Most I.F. amplifiers today have tuned input and output circuits as shown in F, Fig. 10. Both coils and condensers are tuned to the same frequency and the mutual inductance between the coils is held to a low value. In some cases, the circuits are detuned, thus causing a flattening out of the peak of the resonance curve shown in Fig. 8.

The following table contains practical values for the turns ratio of the windings used in circuit B, Fig. 10. These ratios are not the maximum but are good workable ones giving excellent gain, good selectivity and stability.

Type	Tube	Ratio
(1)	'01A, '27, '30, '37	3.5 to 1
(2)	'12A, '26	3.8 to 1
(3)	'99	2 to 1
(4)	'35, '24, '32, '22, '36	1.4 to 1

The standard form used for winding any of the above is 3 ins. long and 2 ins. in diameter.

This article is based on the reference material gathered by the author over an extended period of time and he hopes that it will prove as useful to others as it has to himself in the past.

IMPROVING SUPERHETS' SELECTIVITY

THE writer had a D.C. Victoreen superheterodyne which was not selective for present-day conditions and which did not bring in the high wave lengths; even with a potentiometer turned fully on, that is—towards the minus side, the circuit could not be made to oscillate. The writer proceeded to work out the circuit arrangement illustrated in Fig. 3.

By a simple process of tuning the primary circuits of the I.F. transformers through the use of Pilot Capacigrads C it was possible to obtain sufficient selectivity to separate nearby broadcasting stations, regardless of the length of the aerial. At the same time, the circuit could be made to oscillate by variation of the potentiometer. These condensers have a range which varies roughly between the limits of 100 and 500 mmf.

Fig. 3

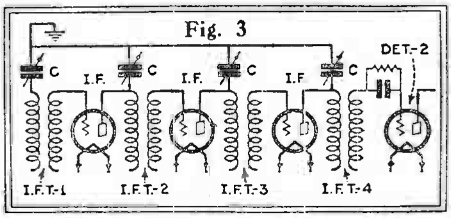

REVAMPING A.C. RADIOLAS

FROM this method of improving the tone quality of Radiola "17," "18" and "33" receivers, I have had excellent results for many customers. Two changes in these receivers will result in greater tone quality and lessened hum.

The first is to install a 2,000-ohm resistor in series between the cathode of the detector tube and the ground or "B—" of the set; this resistance should be shunted by a 1-mf. condenser. The plate feed for the detector is taken off the 45-volt tap and put on the 100-volt connection of the voltage divider along with the plate supply of the R.F. tubes. This method will result in semi-power detection; although sensitivity is lowered, the tone quality will more than make up for this.

The second step is to take out the first audio-frequency socket and replace it with one of the UY type; the filament prongs of which are then wired to the detector filament connections. The cathode of this tube also should be wired with a resistor, say 2,000 ohms, and shunted in like manner to the detector.

This procedure may apply to any receivers designed along similar lines.

Short-Wave Converters and Their Operation

Some hints on improving reception with these popular accessories

THE converter, adapter, and receiver all are the same thing to folk just breaking into the short-wave "game." Although our story is to deal specifically with the "converter," we will first define the other types of short-wave equipment.

Short-wave receiving apparatus, today, falls into three major classifications:

(a) The short-wave receiver, a complete, specialized unit designed particularly for the greatest efficiency at high frequencies (short wavelengths).

(b) The all-wave receiver—often a superheterodyne—designed for reception at broadcast wavelengths, whether long or short. In later models, it has been possible to obtain a good degree of efficiency over all operating ranges.

(c) The adapter, or converter, an accessory which, on being attached to a standard long-wave broadcast receiver, makes a combination capable of reproducing also short-wave programs, telephony, etc. The *adapter* has, generally, a circuit utilizing only the audio channel and reproducer of the receiver to which it is attached; the *converter*, properly, is a frequency changer, and uses also the R.F. and (if there be any) the intermediate amplifiers of the longer-wave set.

The different types of short-wave receivers may be classified, as to circuits, just as are the regular broadcast receivers. The same statement may be made also of the short-wave *adapter;* the adapter feeds a detected signal into a broadcast receiver at the detector input or output; and, usually, derives its power from the broadcast receiver to which it connects.

A short-wave *converter*, ordinarily, is self-powered; it connects to the input posts (antenna and ground terminals) of a broadcast receiver. Converter units are so named because they "convert" a short-wave program into a "broadcast-wave" program; utilizing, to obtain this action, the superheterodyne principle of operation. The converter may be constructed either with or without a signal-frequency-tuned input circuit.

It will be recalled that a short-wave converter consists, essentially, of a tuned local oscillator, and a modulator or first-detector. The oscillator heterodynes with different incoming short-wave signals, resulting in a constant beat-note or "difference-frequency" for any setting of the oscillator, or of both oscillator and tuning control, as the case may be. That is to say, by mixing the two (signal and oscillator) frequencies in a modulator or first-detector tube, an intermediate frequency is created. The converter's output post is connected to the antenna post of a standard broadcast receiver, which is tuned to this difference- or intermediate frequency—which may lie between the extremes of 190 and 600 meters, depending upon the design of the converter unit, as previously explained.

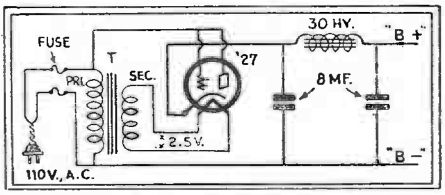

Fig. 2

A simple current-supply unit, adequate for the plate voltage of a short-wave converter.

Some converters incorporate a stage of R.F. or signal-frequency amplification, tuned or untuned, ahead of the oscillator and first-detector.

Superheterodyne as I.F. Amplifier

A word here about the use of a converter with a superheterodyne receiver, before continuing with our technical fault-finding. It may be of interest to remark that a broadcast set using the superheterodyne circuit, when connected to a converter using the superheterodyne circuit, produces a novel hook-up which may be analyzed as follows, using a simplification of the circuit as an instance: one stage of signal-frequency amplification, a first oscillator, and a first detector (or modulator), all in the converter, followed by; one stage of first intermediate frequency amplification (formerly the broadcast R.F. stage), second oscillator, second detector, second intermediate frequency amplification, third detector, first or power audio, all in the broadcast set. This may sound formidable, but all follow in natural sequence.

Converters will not work so well with supers, unless there is, in the broadcast set, some amplification ahead of the first detector to successfully transfer the converter beat signal. With a stage of amplification following the converter's output, the beat-frequency produced by the converter may be amplified at 1500 kc. The oscillator and modulator in the super will again change this to the lower frequency to which the intermediates in the super are adjusted.

Two main methods of changing the tuning band are used in converters. One calls for a coil tap-switch, and the other, for plug-in coils. In the switching system, the connection between the lever and contacts must be perfect. The introduction of resistance, through a faulty contact, may cause either lack of oscillation, broad tuning, or lack of sensitivity.

Where the plug-in coil system is in use, the contacts of the pins and jacks must be kept clean.

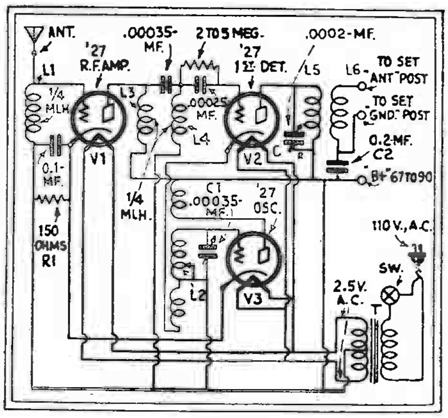

Fig. 1

A method of reducing interference, with an untuned-input converter, is a tuned R.F. output transformer, C-L5-L6.

Selective Circuit Design

Although, when the converter is operating correctly, broadcast signals should not be heard, at times strong signals may be picked up inductively by the wiring or components and reproduced. To avoid this, the converter's output may be tuned in the very simple manner shown in Fig. 1.

A tube 1¾ inches in diameter is used. First, 80 turns of No. 28 enameled wire are wound for coil L5. About ⅛-in. space is left, and thirty turns of No. 28 wire are then wound for coil L6, tapping it at the 10th and 20th turns. A .0002-mf. Hammarlund "midget" condenser with "midline" frequency variation, fits the tuning job very well. The device will work best when placed in a shield can; since all possibility of broadcast pick-up will then be eliminated. This case must be at least two inches from the coil unit at every point.

The ground may be used when the converter is of either the battery type, or the AC type using only a filament supply. If the converter contains its own "B" supply (Fig. 2) the extra ground is not necessary; since one side of the line is grounded. Consequently, if the line plug is wrongly inserted in the 110-volt outlet receptacle, a faint hum will be heard; in which case, it is best to leave the set's ground unconnected.

The Limits of Efficiency

A little reflection will show that a converter cannot work to advantage unless the broadcast receiver to which it is connected is both selective and sensitive. The writer wishes to emphasize this point; for it is one of the most important things in the successful operation of short-wave converters—to paraphrase: "Make sure your broadcast set is right, then go ahead."

While many receivers of present-day design are supposed to afford equal amplification and selectivity throughout their entire tuning range, it has been found that the region around 1500 kilocycles usually affords the best results. Therefore, when the R.F. section of the broadcast set is to be used as the I.F. amplifier of the converter output, the set's dial is to be turned to this frequency setting; and only the converter's tuning dial adjusted to tune in the various stations.

Thus logging is possible, since only one dial, C1 (Fig. 1) is needed to tune in short-wave stations. Of course, if a broadcast signal is found at the selected frequency, the broadcast set's dial must be shifted a few points. Only under exceptional conditions will it be found necessary to shift the broadcast dial to a higher setting.

As previously stated, since the success of the converter depends upon the efficiency of the broadcast set, volume and selectivity adjustments of the latter should be made with care.

After all connections have been made and the assembly turned on, a rushing sound should be heard. If this is not present, the receiver's volume control should be adjusted, either up or down; the latter, to control circuit oscillation which may exist in the broadcast receiver, and may be evident as a feeble hiss and lack of short-wave signals.

The dial of the converter should now be turned with extreme care. This procedure is of the utmost importance. It must be remembered that, if the broadcast set is selective, the converter will appear to be extraordinarily more so; and stations will be passed over if the dial is not rotated *slowly*. Even the loudest short-wave station that can be received, coming in very strong at a given position of the converter's dial, may be tuned out by a slight movement of the dial. (Fig. 3)

Let us now see what factors exist that may prevent the converter from performing satisfactorily.

Faulty Converter Action

It will sometimes be found that the converter acts only as a *broadcast signal booster,* instead of a short-wave signal mixer. This is because the oscillator in the converter is not perking.

The first thing to check up is the tube. Strange as it may seem, it will be found to be the trouble maker practically every time. If you have no means of checking this up, your local dealer will help you out. If the tube is not the cause of trouble, the plate and filament voltages should be checked.

At this point we enter a new field. Some converters use the "B" voltage of the broadcast set; others are run from separate "B" batteries; and still others have their own "B" socket-power units. The use of the "B" voltage of the receiver will be discussed first.

If the receiver used is of the screen-grid type, the voltage is nearly always obtainable directly from the screen-grid lead of a tube. The looped end of the insulated converter lead, designated for that purpose, must be tightly wound over the screen-grid prong. Or, if a lug is at hand, the lead should be soldered to it and placed on the prong, making sure that the contact is solid. It has been found that a connection made to the last R.F. amplifier screen-grid tube affords the best results; since the supply voltage is usually most constant at this point. (Fig. 4)

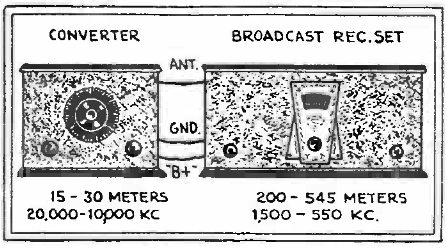

Fig. 3

A division on the converter dial covers a hundred kilocycles, as against ten kilocycles to a division on the set.

If the receiver uses only the "general purpose" types of tube, such as the '26 or '27, the plate voltages are taken from any one of the plate supply circuits (in the radio-frequency section, of course). In this case, where the voltage is pretty high, it is well to insert, for a control, a variable resistor of about 10,000 ohms, and to by-pass it. Too much voltage may cause the tube circuit to oscillate strongly, causing the same general effect as insufficient voltage.

In battery sets, the same methods of connection are followed for either screen-grid or standard type tubes.

Current Supply

Now, if you find that you cannot pick up from your receiver a potential above 40 volts, a separate battery may be introduced. Its negative post connects to the ground and positive post to the "B+ lead of the converter. When doing this, it is also advisable to connect a 1-mf. condenser between it and the ground, to prevent circuit oscillation.

Converters necessarily occupy little space, into which the components will be almost crammed. A mistake in wiring is therefore easy, and frequently occurs. Be sure that the filament transformer's primary-secondary leads are not reversed. Keep this in mind when constructing or servicing converters.

If the converter (as shown in Fig. 1) has a built-in plate voltage supply, the rectifier tube, which may be either of the '27 or the '80 type, should be checked. The '27 type tube as a rectifier is becoming very popular, in view of the resulting compactness; because, also, only a small power transformer is needed. Ordinarily, when used as a rectifier, the '27's plate and grid are tied together and connected to one side of the primary of the power transformer. The cathode is brought to the positive side of the "B" supply. For satisfactory filtration, condensers of high capacity are required. These may be of the 8-mf. "dry electrolytic" type. Nearly perfect filtering is necessary; for, if a hum is present, it modulates the beat frequency, making tuning difficult.

Very seldom does noise originate in the converter, that is, if proper parts have been used in its construction, and care has been taken to do a good job of the wiring. The real "noise," however, is that which is picked-up, when tuning in, especially for distant stations; the level of this noise varies with the location and atmospheric conditions. It must be remembered that the converter-receiver combination provides great sensitivity and, therefore, the chance of noise pick-up is greater than with the broadcast set alone.

Lastly, before condemning the converter, check up, by means of a good short-wave station list (such a list is published in each issue of SHORT-WAVE CRAFT.—*Tech. Ed.*) to determine the probable operating hours, type of programs, and frequency setting of a given station.

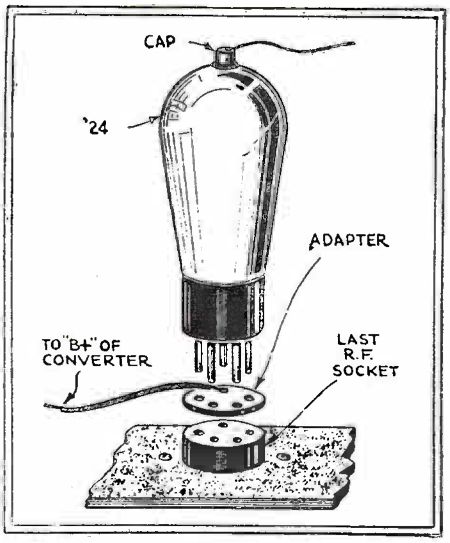

Fig. 4

The method shown affords a method of taking plate voltage from a set for a converter. It may be necessary to pass the lead through a shield.

TUNING IN SHORT WAVES

If one has a modern broadcast receiver equipped with a power amplifier tube and a short-wave set with at least one stage of audio amplification, foreign short-wave broadcast stations can be tuned in on the loud-speaker of the broadcast receiver if the two receivers are connected together according to the simple diagram shown in Fig. 1.

The writer tunes in daily, by means of this combination, the afternoon programs from G5SW at Chelmsford, England, with volume and quality equal to a local station. Three stages of amplification are none too many because the level of background noise is usually very low on the short waves. Howling caused by mechanical feed-back from the speaker may be avoided by using a longer speaker cord or, if necessary, placing the speaker in another room.

Referring to Fig. 1, the lamp cord "A" joining the two receivers can be of any length, and if the sets are located in different rooms the phones "B," which are left connected all the time, can be used to find the station before putting it on the speaker.

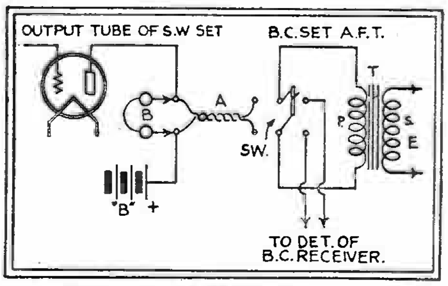

Fig. 1

Short or broadcast waves on the L. S. by switching the S. W. set to the A.F. of the B. C. set.

CHAPTER XI

Practical Operating Notes

Actual Notes Taken and Recorded by Service Men Out in the Field,
Showing How They Solved Special Problems, are Given in This Chapter.
The Reader Should Refer to the Index.

Repair of Transformers, Chokes and Condensers

THOSE who test and repair radio apparatus professionally have been confronted many times by defective audio and power transformers, open filter and audio chokes, open dynamic speaker fields, and ruptured or shorted condensers. *For several years the writer has been repairing this type of apparatus without disturbing its place in the radio set or power pack; or tampering with the coil winding.*

As a few laboratories know, an open transformer primary or secondary, an open choke or field coil is most often caused by the expansion of the coil winding resulting in an open circuit.

What is necessary to repair A.F. transformers, filter chokes and field coils is voltage several times greater than that under which the apparatus is operating. An A.F. transformer primary usually operates at 45 to 180 volts; in most cases 300 volts is sufficient to close any open A.F. transformer primary. A filter choke usually passes the entire output of a power pack; therefore a higher voltage is necessary to "heal" the open.

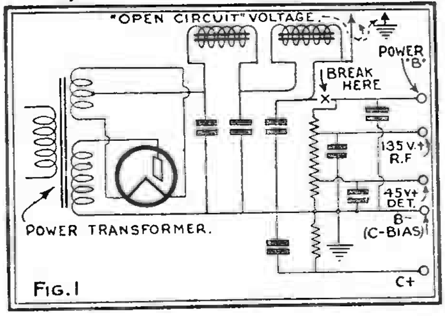

FIG. 1

This figure indicates the point at which to break the high voltage to supply an "open circuit" potential.

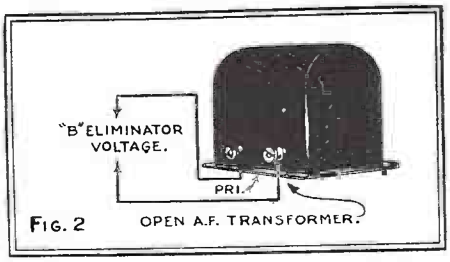

FIG. 2

Fixing A.F. transformers on the repair bench.

Quick Field Repairs

With the many A.C. sets now manufactured it is an easy task to repair audio transformers and even filter chokes, in the home of the customer without the aid of external means. Most A.C. sets use power tubes requiring at least 180 volts on the plate. The power pack of such a set usually delivers 300 volts *without a load.* A power pack employed in delivering plate voltage for a 210 type tube will deliver over 500 volts *without a load.* It is with this "open circuit" voltage that we repair transformers and chokes.

Bring out leads from the negative and high-voltage leads of the pack (Fig. 1) and apply them directly to the terminals of the open transformer primary (Fig. 2). (Bear in mind that the pack must be operating *without a load* to secure the higher voltage.) After five seconds, remove voltage and test. If winding is not closed, repeat procedure applying voltage for a longer period until winding is closed. The same method is used with the secondaries of A.F. transformers (only apply voltage for a second or two as this winding can be burned out very easily).

When a transformer is found with primary shorted to secondary apply voltage to one side of secondary and one side of primary, Fig. 3. Very often, the short is cleared by the breakdown of the turn or turns of wire that are shorting.

A filter choke or field coil of a dynamic speaker, though usually requiring a greater voltage to "heal" it than that under which it operates, has been repaired with only the voltage of the power pack in which it was working.

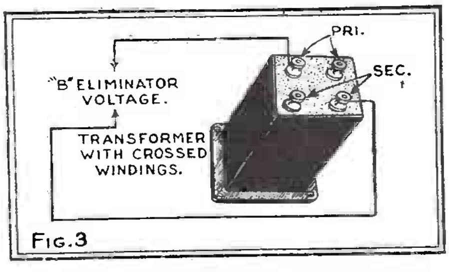

FIG. 3

Repairing audio transformers with "crossed" windings.

More "Homework"

In A.C. sets where the first audio transformer primary is open, the healing process is much simpler.

Leaving the power pack connected to the set, and, *removing all tubes except the rectifier,* place a wire (X) from the plate of the detector tube to the plate of the power tube (Fig. 4). This will impress upon the primary winding of the first A.F. transformer the whole output of the pack (less the detector voltage). Where the output is 400 volts or more, open second-stage transformer windings can be "healed" in like manner by connecting the plate of the first audio tube to the plate of the power tube (Fig. 5.)

Power transformers can be repaired by applying high voltage to any winding that is open. This applies to A.C. filament windings as well as primary windings. Shorted primary windings of power transformers can be cleared by high voltage impressed upon input terminals. A.F. transformer shorts can be cleared in a similar manner.

N.B. We must bear in mind that the heavier the winding, the greater the voltage impressed must be, and for a longer period. Sometimes voltage must be applied for an hour before any result is attained.

Perhaps an explanation of this "healing process will be of moment. When voltage is applied to an open winding, an arc occurs at the open, burning the insulation from adjoining turns, recreating a continuous winding.

A common complaint in audio amplifiers

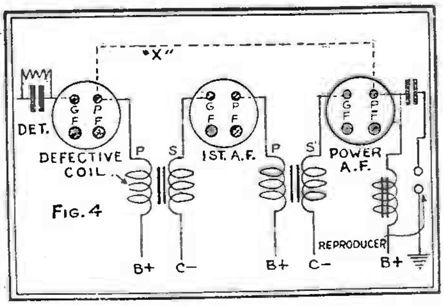

FIG. 4

Circuit for repairing first stage A.F.T. primary.

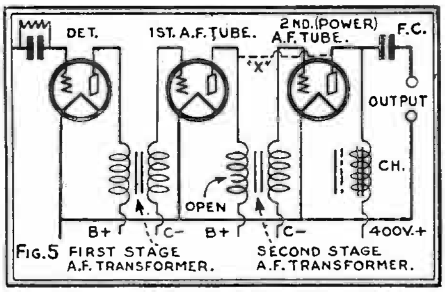

FIG. 5

Circuit for repairing second stage. A.F.T. primary.

is noisy transformers. A heavy shock of high voltage, for an instant, invariably clears up this trouble. (The poor connection has been fused to better contact.) Fig. 2.

Condensers break down after being in service for some time, or upon the voltage rating being exceeded, due to the insulation at some particular point in the condenser breaking down, causing a short between layers of foil (usually condensers such as these show only a partial short upon testing for continuity. These can most often be easily repaired).

Condensers which are "partially" shorted can be repaired by applying 110 volts A.C. to

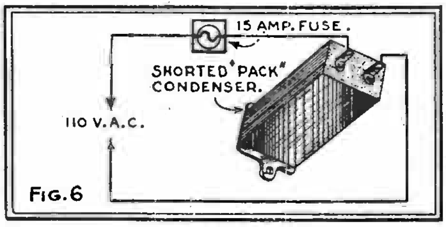

FIG. 6

Circuit for breaking down condenser shorts.

the terminals (see Fig. 6). A fuse must be inserted in one side of the A.C. line to blow (instead of the 20- or 30-ampere fuse in the meter box, which is very often located in a most inaccessible part of the basement), when voltage is applied to the shorted condenser (Fig. 6). Very often, several (15 ampere) fuses must be used before the condenser is repaired.

This method of healing transformers and chokes and condensers has been found to be 90% efficient and is sure to save much time, labor, and money. A certain company estimates a saving of $1,000 during the past two years, using these methods of "shooting" apparatus.

◆

Electrolytic Condensers in Power Packs

SEVERAL manufacturers (including Amrad, Crosley and Zenith) use "Mershon" *electrolytic condensers,* for filtering purposes, in the power packs of their receivers. They thereby effect a considerable economy, as may be seen when we consider the filtering effect which takes place around these condenser units.

Since the electrolytic condenser has a much higher capacity than a *paper-dielectric* condenser of the same dimensions and voltage rating—in addition to being much simpler in its construction—it is possible to use choke coils of less inductance and, consequently, a greatly-reduced number of turns. As magnet wire is expensive, the economy is evident.

The electrolytic condenser is much more rugged than the paper variety, and has a considerably longer life. This is due to the fact that it is "self-healing"; and consequently a break-down of the *insulating film* on its plates, due to an unusual voltage-surge, will not cause permanent damage. The manufacturers above named, therefore, find that the use of this condenser effects a reduction in the number of service calls.

The writer has observed that, in the few instances known to him where electrolytic condensers had broken down in what seemed to be normal service, the trouble originated in the fact that the receiver had been installed by *an inexperienced service man.* What is meant by this, is that certain *necessary* operations had not been performed when the installation was made.

On all these condensers there is a small rubber-stoppered "vent hole"; its purpose is to permit the escape of gases formed during the normal operation of the device. If this rubber stopper is not removed, the gases cannot escape and the resulting chemical action causes the unit to break down. When this stage is reached (the plates having become covered with a film) the only remedy is an expensive one—replacement of the unit.

It will be noted that the newest Zenith job has been cleverly designed to eliminate this "human element." A board which covers the electrolytic condenser unit has been so packed with the receiver that it is necessary to remove this board to complete the installation. Now, when it is removed, *the rubber stopper comes out with it;* since the stopper is glued to the board!

The Crosley radio set uses two 12-mf. sections (one on each side of a single choke coil); while the Zenith set calls for 16-mf. on each side, and Amrad uses 8-mf. on each side.

Direct-Current Precautions

On a *Crosley D.C. receiver,* if the set's power cable is plugged into the light line *in the reverse direction,* the Mershon condenser will *certainly* be ruined if it is left in long enough; for this condenser is distinctly different from the paper type in that it is *"polarized"* (that is to say, it blocks a current from flowing in one direction, but permits it to pass in the other, like an electrolytic rectifier, which is very similarly constructed). Therefore, a Mershon unit must be connected with its positive lead to the *positive* side of the filter, and its negative lead (copper can) to the *negative* connection of the filter.

To find out whether such a D.C. set is properly connected to the light-line, simply turn the set switch to "on," before the cable-plug is inserted in the house-current receptacle. If the dial-light ("pilot" light) *glows dimly,* the plug is wrongly inserted; *reverse* it at once. The explanation of this peculiar effect is that these polarized condensers pass a current when their connections are reversed, as stated above; and that the power unit, when thus improperly connected, is loaded by the condensers to such an extent that insufficient current reaches the filament circuit.

Mentioning this fact calls to mind a certain student service man who, when one of these series-filament D.C. sets showed "no

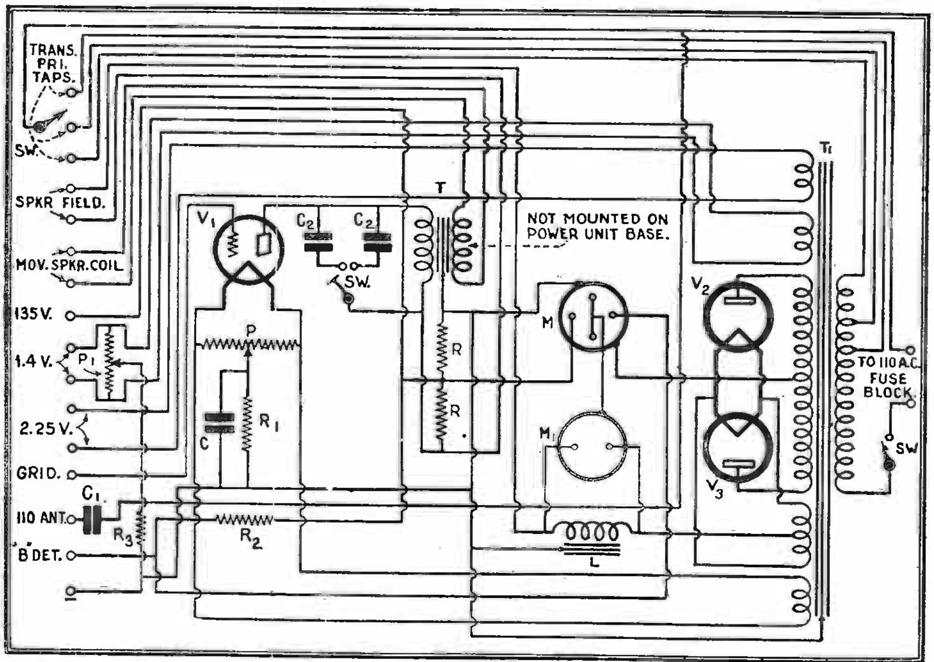

Schematic Circuit of the Amrad Type 7191 Power Unit designed for the Model 7100 receiver. The Model 7100 receiver is designed to operate without an outside aerial, the radio frequency pick-up of the light line being sufficient in most localities to bring in the signals of distant stations. Units M and M1 are Mershon electrolytic condensers.

voltage" across one of the tube filaments (because one of the tubes in series with it had gone bad) reported that the *power-transformer* winding had burned out!

(*Incidentally, the quick way to test for open filaments in D.C. electric sets is to short each tube filament, successively, with a piece of copper wire. When the burnt-out tube is reached, the others will light with slightly more than normal brilliancy.*)

Although the electrolytic condenser incorporates a very high capacity in very small dimensions, the "old-reliable" screwdriver test will not give the enlightening information as to its condition that would be obtained from a large paper condenser. Because the internal resistance of the electrolytic unit is very low, compared with that of a paper dielectric, there exists always a *leakage-current* which effects a rapid discharge of the condensers. A heavy spark, therefore, is not obtained from the electrolytic condenser, notwithstanding the high capacity of the unit, when the terminals are shorted.

A shorted electrolytic condenser, however, may be tested with any device which will indicate a short circuit. One which is defective will usually be recognized by a greenish (perhaps yellowish or reddish) chemical deposit on the walls of the condenser. When this deposit is seen, we need not bother to test the unit; but must replace it immediately.

Test the Rectifier

Service men should be instructed to check the rectifier tube whenever a filter condenser is serviced; for this tube is almost certain to be "shot," because of the excessive current the shorted condenser passes. A burnt-out transformer winding, also, may check back to a shorted pack condenser (whether paper or electrolytic), because its windings are not designed to carry the excessive current which flows in a shorted circuit. For this same reason, a burnt-out resistor in the pack portion of a set may have been caused by a shorted pack condenser; the resistor acting as a "fuse," and perhaps saving some more expensive device.

While on this subject note that, so far as the author is aware, only one separate "B" eliminator is using the Mershon condenser; this is the "Velvet," made by National. However, if the service man gets a call on one of these jobs, he should first check for continuity the resistor which connects between the detector. tap and "B—," as this has been the real offender in all cases which have come to the attention of the writer. The customer usually reports "low volume on all stations."

A high-resistance meter, connected from detector plate to "B—," will read almost the total voltage of the pack; and this excessive voltage may have damaged the detector tube, necessitating its replacement.

READJUSTING THE DYNAMIC-SPEAKER CONE

THE writer has been called, on numerous occasions in the past three months, to repair dynamic reproducers in electric sets and "please take out the rattle." As I have a "Majestic 72" myself, I decided to sacrifice my own speaker to the cause of improvement, and find out what was the matter.

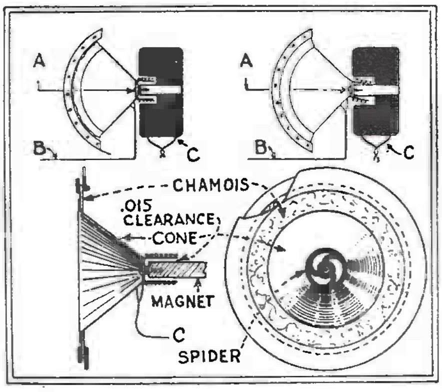

Fig. A

At upper right is shown how slight a distortion from normal adjustment (left) is needed to cause rattle. It is corrected by softening the chamois ring, as shown below.

Here is what was found (and I am wondering yet why the radio engineers have not published it—that is, of course, if they have found it out): the cause is atmospheric conditions—*the heat and moisture in the air.*

The dynamic-speaker diaphragm is securely held at the periphery or rim of the cone, with a ring of *chamois skin,* or some other similar substance. Warm weather, following a period of dampness, causes this material to harden, and pull the paper of the cone slightly toward the top or sides. Sometimes the paper itself, after absorbing moisture, becomes dry and distorted. Under strong vibrations while in operation, the center of the cone, which carries the voice coil, touches the field magnet, as indicated in the illustration (Fig. A). I found out this fact by the use of ordinary automobile cylinder gauges of the feeler type.

The remedy I have found is to loosen the reproducer's clamp nuts at the outside rim, which holds the chamois skin or leather; carefully rub the skin between the fingers until it becomes again soft and pliable; and then put it back, very loosely, in the rim. In the case of the Majestic, or any other speaker having a bakelite or some such "spider" held to the field-magnet case by a small screw, I make the hole which passes this screw a little larger. The frame may then be adjusted accordingly In only one case out of thirty-seven did I find the paper so badly distorted that I had to use a new cone. This complete job takes only about three-quarters of an hour to do; and it is building up quite a reputation for us. We have found on numerous visits that we had been recommended by a friend who had one of these sets serviced by us.

PROTECTING THE A.F. AMPLIFIER

"A.F. TRANSFORMER shot again!" "Why?" is the first question an owner of the set asks after he has had this very thing happen over and over again, and the cost of maintenance of the set mounts higher and higher.

The writer has been running a small radio laboratory in what is said by many manufacturers of audio transformers to be the worst locality in the United States (Southern Florida). Upon our returning the transformer to the factory, the same stereotyped correspondence ensues: "We are sorry that the transformer developed a defect after you had purchased it. We are replacing it free of charge." Obviously, the customer of a very fine custom-built set will start to register a heavy kick after such a thing occurs about four times a year; even though the replacement costs him nothing and the community set builder is out his time and service charges.

We have been worn dog-eared here with this trouble; so much so, that we were compelled to find some remedy. Obviously it wasn't all caused by moisture leaking in, as the manufacturers would have it. If such were the case, why then didn't the secondaries go as well as the primaries? What was the difference? Why simply this; the primary carries D.C. which the secondary did not. *Take out the D.C. in the primary* and then see what will happen. We invented an indirect method of coupling and ran test after test. We have had transformers last as long as three years with the indirect method of coupling; and then switched them around to the direct method and had them go out in two weeks. This proves conclusively that the major number of "blown" primaries *are caused by D.C. surges;* static encourages this sort of thing wonderfully in this part of the country.

A burst of static will cause the plate current to jump as much as 50 milliamps. when directly connected! One can visualize what is happening at the soldered connection of the small wire and the larger one within the transformer. This connection pulverizes in time; and the winding gradually breaks down, becomes noisy and then opens. Where two dissimilar metals, such as solder and copper, are brought together and heated, a minute current is started; this causes a slow oxidization of the weaker metal. The whole becomes porous and the resistance rises; and this oxidization when once started keeps right on—and that is generally what happens to the audio transformer.

Fig. 1 shows the indirect method of coupling which we use; not only does it give a markedly better quality to the reproduction (the low notes come through splendidly) but it permits of a third stage of audio easily.

Fig. 2 shows a sketch of a three-stage amplifier which we have used for years with splendid success. The plate current rarely exceeds 25 milliamps, and there is all the volume one can stand in the average home. It will be noticed that the plates of the detector tube and the '01-A are returned through 1/10-meg. resistors. This system requires only one tap to be taken from the "B" battery bank. A D.P.S.T. switch should always be used; so that the "B" current is cut off when the "A" is cut. A protector tube should be used between the "A" supply and the "B"; "A+" is connected to "B—" through a 40-watt elec-

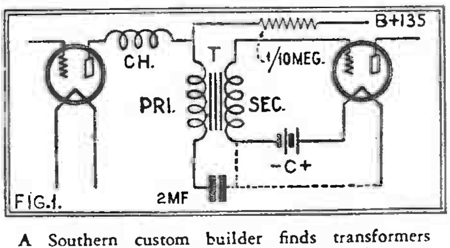

FIG.1.

A Southern custom builder finds transformers connected in the usual manner very subject to burn-out from "static." The connection above prevents this entirely.

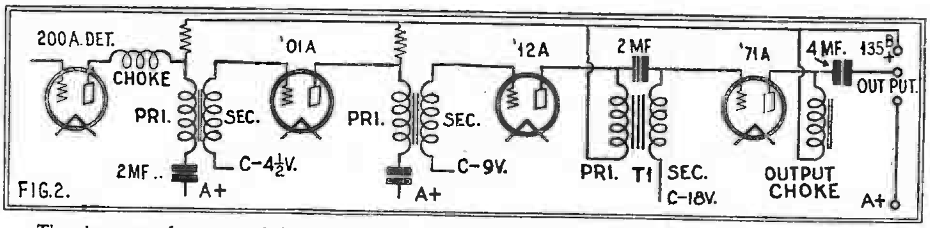

The three transformer-coupled stages above were designed to prevent transformer primary burn-outs, on the principle of Fig. 1. Keeping the plate current out of the primary also minimizes distortion.

tric-light bulb. This point cannot be too highly stressed; for by-pass condensers sometimes do break down. If such trouble should occur, the protector tube lights up, saving the tubes and a lot of loss of religion.

(To prevent circuit feed-back the 40-watt lamp should be by-passed with a condenser of 1 mf. capacity.—Editor.)

NEUTRALIZING PROBLEMS

TO balance a neutrodyne receiver similar to the Philco "87," Brunswick "14" and "21," etc., an output meter should be connected across the speaker terminals, as shown in Fig. 2. The R.F. oscillator (such as that shown in Fig. 1, which may be operated conveniently from the light socket) is set in operation at about 1250 kilocycles, and a wire coupled to its oscillator coil is attached to the "antenna" post of the set. Then after adjusting the volume control for full meter reading, start with the last stage of R. F., and balance each of the neutralizing condensers until the reading is at minimum. Turn the volume control till a reading of about half the scale of the meter is obtained at 1500 kc., with the receiver tuned to the oscillator signal. Then balance each of the aligning condensers until the highest reading is obtained. Repeat the latter procedure at 600 kilocycles, and the receiver is now balanced. If any difficulty is encountered in preventing oscillation after balancing, check all the filter and by-pass condensers for a partial leak; the defective one should be replaced.

In checking a Radiola "44," if a rasping noise is heard between stations when turning the dial, don't look for a shorted variable condenser, but clean the shield cans at the contact edge. If the condition persists, balance the set as above.

When checking a screen-grid receiver whose response is weak, place a good screen-grid tube in the detector socket, and the reception will usually improve remarkably. Also, watch for those shorted screen-grids; because they are often the cause of no reception.

In case of a serious hum in a Zenith "50" or "60" series receiver, which cannot be eliminated by changing tubes (often the '24 detector will cause hum), remove the chassis from the cabinet and reverse the two black leads. If lack of selectivity is encountered, the receiver should be tuned to about 1195 kc. when the oscillator is set at 1200. After balancing the receiver with a hexagon No. 5½ wrench, the selectivity should be better. If it is not, then tune the receiver to about 1205 kc., leaving the oscillator at 1200, and rebalance. One of these procedures should obtain greater selectivity. The second and fourth aligning condensers (from the left) will be found critical to adjust. This chassis need not be taken from the cabinet for rebalancing.

If a Philco speaker seems to be dead, pull the chassis out of the cabinet, and remove the bottom plate; then make sure that the speaker plug contacts are O.K. When a hum is heard, check the '45 tubes. If no screen voltage is obtained while testing the set, check the volume control and the fixed condensers in the screen-grid circuit. Even though the volume control checks O. K. in a continuity test, try another and see what happens.

In a Zenith "41," the resistor which feeds screen-grid current may be found defective. Take out the two 25,000-ohm resistors and replace with a small 50,000-ohm Ward-Leonard resistor; this will make a permanent job.

If no plate current is found when checking a Zenith "30," the voltage divider is probably burnt out: look also to the cathode resistor of the first audio tube in this model. On a Zenith "11E," "15E" or "18," look to the power condenser.

When going out on a call, the Service Man should have a reliable set tester (I use a Weston "547") an oscillator and output meter, similar to those shown. An ohmmeter, such as that in Fig. 3, should prove valuable to determine whether a component is shorted, or whether its resistance is correct. Adequate tools include several sizes of screwdrivers and pliers, soldering iron, assorted lugs, nuts and bolts, wire and a line of tubes of different types.

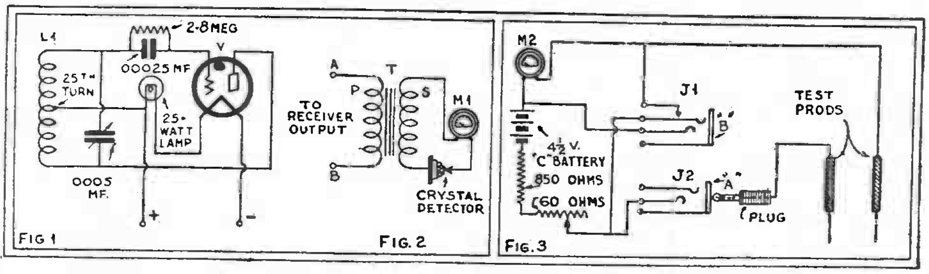

Left, a convenient R.F. oscillator; center, an output meter which will be found very handy in balancing work, as more accurate than the car. Right, an ohmmeter which will read high or low values. (The Brunswick manual should be credited with this.)

TABLE I

(Plug in position "A")

Reading ma.	*Ohms*	*Reading ma.*	*Ohms*	*Reading ma.*	*Ohms*
0.0	Infinite	1.7	1,745	3.4	423
0.1	36,000	1.8	1,600	3.5	385
0.2	26,000	1.9	1,465	3.6	350
0.3	14,100	2.0	1,350	3.7	316
0.4	10,350	2.1	1,240	3.8	284
0.5	8,100	2.2	1,145	3.9	253
0.6	6,600	2.3	1,055	4.0	225
0.7	5,530	2.4	975	4.1	198
0.8	4,725	2.5	900	4.2	171
0.9	4,100	2.6	830	4.3	146
1.0	3,600	2.7	766	4.4	122
1.1	3,190	2.8	707	4.5	100
1.2	2,850	2.9	651	4.6	78
1.3	2,560	3.0	600	4.7	57
1.4	2,315	3.1	551	4.8	37
1.5	2,100	3.2	518	4.9	18
1.6	1,915	3.3	460	5.0	0

TABLE II

(Plug in position "B")

Reading ma.	*Ohms*	*Reading ma.*	*Ohms*	*Reading ma.*	*Ohms*
0.0	0	2.7	13	4.0	47
0.5	1	2.8	14	4.1	54
0.8	2	2.9	16	4.2	63
1.1	3	3.0	18	4.3	74
1.3	4	3.1	19	4.4	90
1.6	5	3.2	20	4.5	110
1.8	6	3.3	23	4.6	140
2.0	7	3.4	25	4.7	210
2.1	8	3.5	27	4.8	370
2.2	9	3.6	30	4.9	1,000
2.4	10	3.7	33	5.0	Infinite
2.5	11	3.8	37		
2.6	12	3.9	42		

DON'T BLAME THE RECEIVER—ALWAYS

A PROFESSIONAL pianist, residing on Long Island, wrote to F.A.D. Andrea that she desired to play the piano in conjunction with piano concerts over the air, adding: "I find that the loud speaker of my radio is not in true pitch; for I have had my piano tuned by a well-known piano tuner."

The lady was informed that speakers are absolutely true to pitch and the chances were that the piano had been tuned by a tuner who used a tuning fork of discontinued pitch. At the National Music Trades Convention, four years ago, it was decided to change "International Pitch" to 440 A.

The tuner was called in again, at the suggestion of the radio company, and when the tuning fork was examined it bore the figures 435 A. That explained why the *piano in the home* was lower *than the reception via the ether.*

The case resulted in the discovery by the pianist of great variances of tone and pitch in other residences.

THREE SET HINTS

IF an Apex "Model 80" gives low volume and a popping noise, see whether the volume control is touching the metal shield. It should be centered and tightened.

When a late 1930 model Apex begins to motorboat, or give harsh tones and incorrect tube readings, it is an indication that the small condensers are out of step. They should be adjusted with the shield in place, by the aid of an output meter.

When an Atwater Kent gets noisy, look for a dirty volume control, in almost any model. The cure is a good cleaning with gasoline.

Prescriptions of a Radio Doctor

Some Common Ailments of Popular Receivers

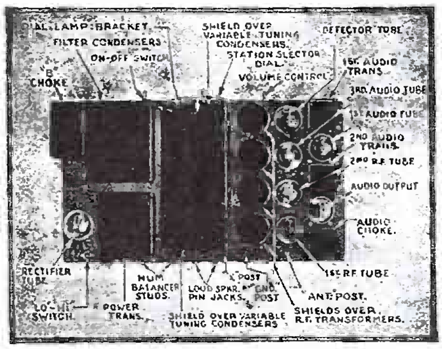

The positions of tubes, hum balancers and other parts of the Stromberg-Carlson "636" are shown above.

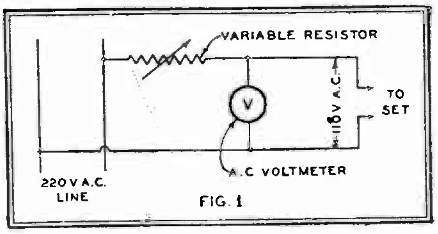

FIG. 1

A fundamental circuit for operating 110-volt apparatus from a 220-volt line; the resistor must dissipate as much current as the set draws.

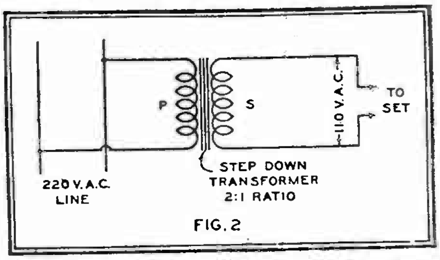

FIG. 2

The most efficient way to obtain 110 volts from 220 is to use a step-down transformer. Note—it doesn't work on 220-volt D.C.

In the course of diagnosing and repairing the ills of radio receivers, there are many kinks and easy remedies which cannot be learned from books; these must be obtained from personal experience. It is the purpose of this article, therefore, to hand on to the serviceman a few of the troubles encountered during a period of servicing, with an explanation of the remedies used. Many of the ills cited are common to a particular type of set and, if the serviceman knows the remedy, the trouble is easily fixed.

110-Volt Operation from 220

Several cases have been encountered where the customer had purchased a socket-operated 110-volt A.C. receiver while supplied with 220 volts, or had moved to a section having a 220-volt A.C. supply.

There are two possible methods whereby the set may be used on the 220-volt line. Undoubtedly the first remedy which suggests itself is the use of a resistor in series with one side of the line. This method would be wholly satisfactory were it not for the fact that the value of the resistor to be used varies with the load and with different receivers. If there are no A.C. meters on hand, there is no simple way in which to ascertain the correct value of the resistor required to reduce the potential to 110 volts. If an A.C. meter is available, it is placed across the input terminals to the set and the variable resistor R is connected in series with one side of the line as shown in Fig. 1.

An optional method of reducing the line-voltage is illustrated in Fig. 2. Here use is made of a *step-down* transformer having a ratio of 2 to 1. The secondary is connected across the set input.

Magnavox Receivers

In two cases the serviceman was called upon to fix old-style Magnavox receivers. Both needed new tubes besides a few minor repairs. When all was in readiness, and the tubes inserted, the set refused to work. A careful check showed that the receiver was in perfect condition. It was noticed that the filament rheostat ("volume control") was provided with a pin which prevented it from being turned to a full "on" position. This pin was removed, as well as the fixed resistor found under the set near the front panel, protected by cardboard. Both sets functioned well after this had been done.

Increasing Response

Certain types of receivers, such as the R.C.A. models 16, 17 and 18, Knight, Graybar (which are the same as the Radiolas) and others, use a resistor across the antenna and ground in the first stage; so that the gang control will not be affected by the size of the antenna used. These sets are all of the single-dial type and the response at the upper end of the broadcast spectrum is less than that at the lower end. A simple remedy is to take a coil (which if tuned by a variable condenser will cover the broadcast band) and connect it across the antenna and ground. (*It may be convenient to try this coil in series with the resistor.—Editor.*) If the coil is provided with a primary, this should be ignored and the secondary alone used; the primary winding may be removed if desired. Coils obtained from an old three-dial tuned-radio-frequency set were used and, since they were of the basket-wound pattern, took up little space.

Hum in Stromberg-Carlson

In one instance a Stromberg-Carlson set No. 635 developed a hum after a period of about six months' steady use. There are two "hum balancers" at the rear of the chassis, and these when adjusted failed to reduce the hum. Indications were that the filament supply was

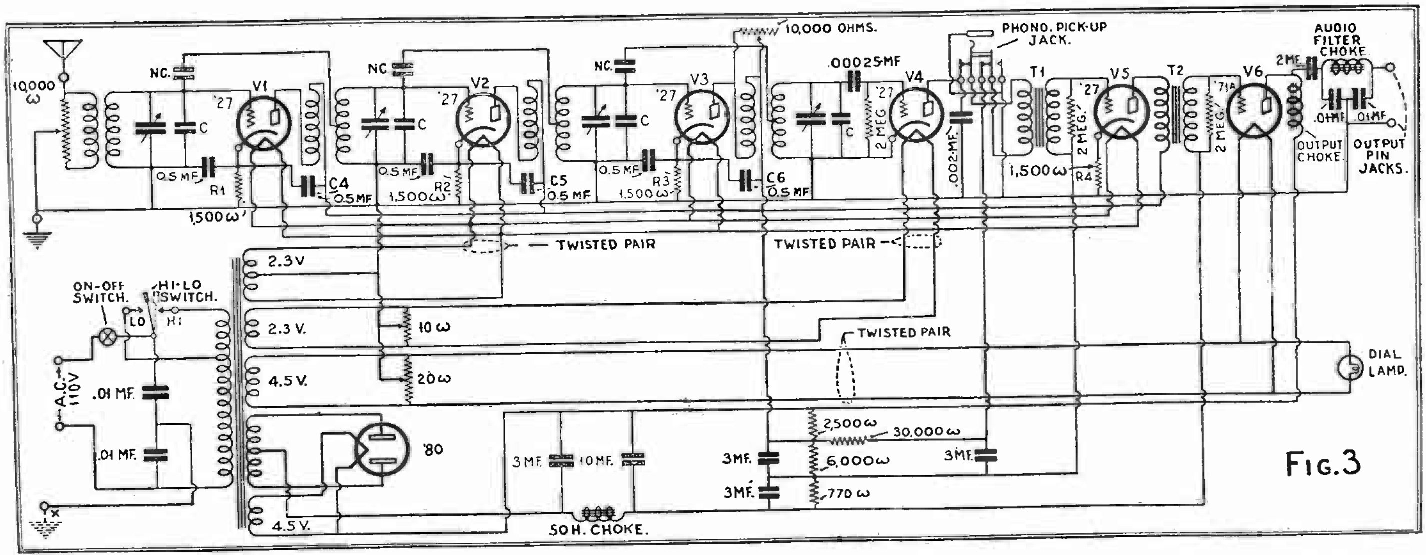

FIG. 3

Circuit diagram of the Stromberg-Carlson "Models 635" and "636", indicating all values. The circuit is, obviously, a neutrodyne; and the service man will find little trouble in making tests and replacements, with the aid of the picture above. Manufacturer's changes in parts of the circuit, in some sets of these models, are shown in the continuation.

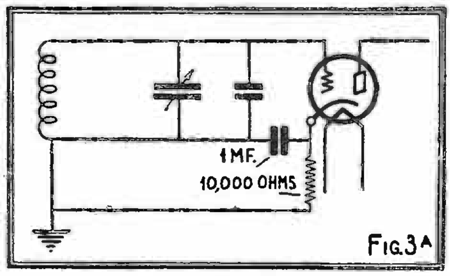

In certain of the Stromberg-Carlson models, as explained in these columns, plate rectification is employed. This alters the detector circuit only to the extent shown.

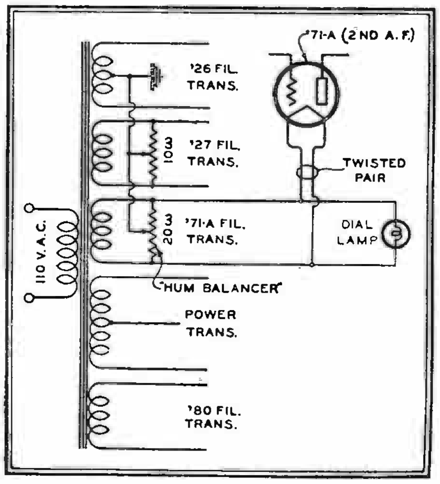

Fig. 3B
The power-transformer windings of the Stromberg-Carlson "635" and "636," showing how a ground in the filament circuit introduces hum.

grounded; undoubtedly the audio filament supply, since the dial light went out when the "hum balancer" was turned as far as it would go in one direction and the "hum balancer" of last audio tube when turned did not effect a balance.

This conclusion proved correct for, when the dial light bracket was examined, it was found to be bent forward and one side of the lamp socket was making contact with the dial and thereby grounding the '71A filament circuit. The portion of the set in question is shown in Fig. 3B. This trouble has been experienced also in the 636 type Stromberg-Carlson receiver. (The change in the detector circuit of these models with plate rectification is shown in Fig. 3A.)

Some Pointers on Servicing

WHEN testing plate voltages on A.C. tubes, the mistake is often made of placing the meter across the *"B" supply* in order to determine the *plate* voltage. This reading does not give the true plate voltage; instead, plate voltage *plus the grid voltage* will be registered. To obtain an accurate measurement of the plate voltage, it is necessary to connect the meter V between the plate terminal of the tube socket and either filament terminal ("X" type of tube or *the cathode, in a "Y"-type tube*) as illustrated in Fig. 1. The reading is then the total voltage, *minus* the voltage "dropped" across the "C-bias" resistor.

A recent experience with a Bremer-Tully receiver illustrates a condition prevalent in many installations. The receiver in question employs type-'26 tubes. These tubes were changed in the receiver and the hum increased to an annoying level. The most frequent source of such trouble is lack of balance in the filament circuit. This receiver made use of a fixed filament shunt resistance with a fixed centre tap. In view of the fact that circuits and tubes are different, the fixed centre tap resistance does not always fulfill balance requirements.

The filament shunt resistance in use was replaced with a variable centre tap element, which was then adjusted for minimum hum. The setting was decidedly off centre. Such conditions exist in many receivers and we suggest that fixed centre tap resistances associated with the filament type of A.C. tube be replaced with a variable centre tap unit. The same applies to systems which involve centre tapped transformers. These centre taps are located according to the number of turns in the winding and are not always the electrical centre. A variable centre tap resistance when correctly adjusted for minimum hum will invariably afford superior results. Fixed centre tap resistances are not required with the cathode type of A. C. tube (Fig. 3).

The resistor values indicated in the diagram are as follows: R1, R2 and R3, 770 ohms; R4 and R5, 8 ohms; R6, 15 ohms; R7, 3 megs.; R8, 40 ohms; R9, 3,000 ohms; R10, 5,500 ohms; R11, 4,900 ohms.

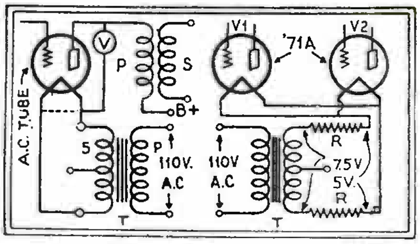

Fig. 1 **Fig. 2**

Left: Obtaining correct plate-voltage reading. Right: Balancing reduced filament potential.

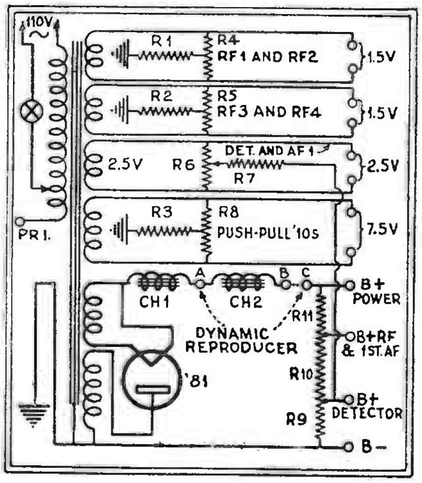

Fig. 3

The necessity for the schematic circuit when servicing receivers is obvious with a "kink" such as the use of resistor 7 above, in the power pack of the Bremer-Tully "8-20-A."

A filament transformer with a 7½-volt, winding had, in an emergency, to be used for lighting two '71A tubes. In order to cut the voltage down to 5, a resistor R was placed in series with each secondary lead; if only one resistor were used in series with one of the leads, the *electrical balance* would be destroyed. The two '71-A tubes draw half an ampere of current and the resistance required in each leg is 2.5 ohms; since the drop required is 2.5 volts at .5 ampere. This method is shown in Fig. 2.

Improving the Victor "R-32" and "RE-45"

THE later or improved model of the Victor "R-32" and "RE-45" is shown in the *Official Radio Service Manual*. Since there are thousands of the earlier model in use, I think it a good idea to acquaint the independent Service Man with the first hookup; all the changes are in the power pack. (*The circuit is also that of the "R-42" and "RE-75."*)

If a Service Man comes across one of these old models, he has a chance of making a little extra money by recommending that the changes be made; for they result in improved reception, less hum and hiss. Only two by-pass condensers and a 30,000-ohm resistor are needed, making the cost low. The condenser block need not be changed; and the job should not take more than twenty or thirty minutes, for it is very easy to get at the "innards of these sets." The changes are shown in dotted lines.

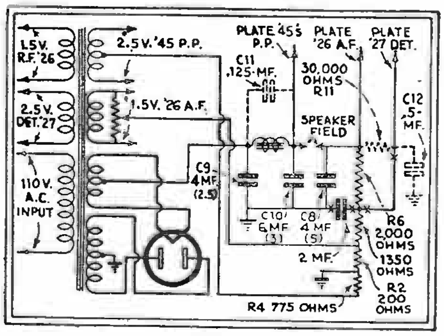

Fig. 4

The changes indicated in dotted lines make an early "R-32" or "RE-45" Victor power pack identical with the standard model.

Solving Actual Service Problems

A Series of Articles as Written by Service Men out in the Field. Consult the Index for Data on Specific Sets.

RECENTLY the writer has had the experience of installing a Victor Combination in an apartment house on West End Avenue, New York, where direct current only was available. This was utilized by the use of a converter to give an A.C. power supply; an ungrounded choke-and-condenser filter; two 8-mf. condensers, in series and shunting the line with a choke in each line—grounding center tap to chassis or ground increased the hum—was placed *after* the converter, in the line to the set. It was found impossible to operate the set, when an aerial about a hundred feet long was used, because of the tremendous noise pick-up. With a sensitive loop set this interference could be detected on the roof (strongly, near a water tower) and (weakly) down into the court where the lead-in was installed, but principally within the building itself.

The outside interference was eliminated by the erection of an aerial 400 *feet long,* suspended (away from the offending water tower) between the building in which the set was installed and the water tank on the top of a 20-story apartment house, some distance away. The aerial was elevated about 200 feet, and was free and clear of obstructions. The interference in the court was taken care of by using for the lead-in shielded wire, grounded at both ends. (Although this, to some extent, by-passed the signal, it acted to a greater extent as an interference shield.)

However, interference on the *lower wavelengths* was still strong. The interference stopped entirely when the A.F. amplifier was switched to "phonograph," or when the antenna was disconnected (the latter test eliminated the converter as a source of trouble); touching the antenna post brought in a powerful local, faintly, but the interference came in still stronger, and a coil of wire dropped on the floor, with an end connected to the aerial post, greatly increased the noise pickup; apparently it was an inside problem.) The converter was placed inside a closet, opening into another room; and duplex lead-sheathed wire was run to the set for the D.C. power switch and the A.C. supply. *Another* filter was put in the A.C. line *ahead* of the converter; so that we now had one filter for the D.C. and another for the A.C. These changes, the result of many tests, helped a great deal; but noise on the *lower wavelengths* was still very strong, and the short-wave stations were hardly audible.

After much labor and experiment, a solution that solved 95% of our interference was found. The lead coming from the window to the set ran through a large room, a foyer, and then through another large room to the set. It was determined that the noise was being picked up *in the room housing the receiver;* and the only one in which it could be placed. The inside lead was pulled up; and in its place there was brought from the window to the set a double twisted lead, one wire of which was grounded at both ends. This eliminated practically all noise, and the lower-wavelength stations came in loud and clear.

Set Peculiarities

The Stromberg-Carlson "523" and also the "734" radio sets have one choke, L9, in the *positive* side and two, L5 and L6, in the *negative* lead of the power pack. (Fig. 1.)

The choke L9 is the plate choke located in the plate circuit of the output tube and passes the direct current consumed in the plate circuit of the output tube. C8 is the speaker coupling capacity feeding into the speaker through the audio filter C6, C7, L8.

With the Atwater Kent "41DC," sharper tuning and greater pick-up may be secured by either shorting or removing the resistor in the plate circuit of the first R.F. amplifying tube, which is located near the tube and the antenna coil.

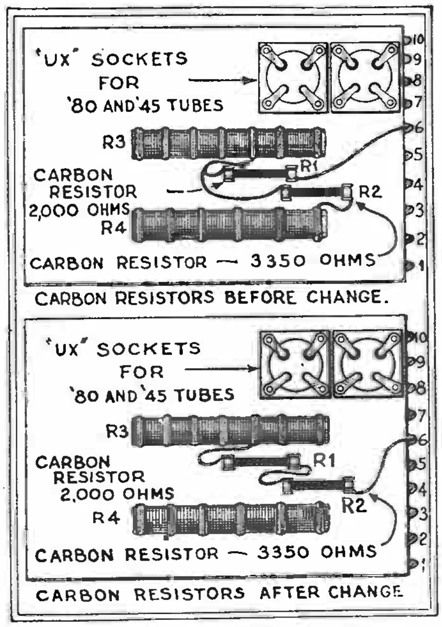

Fig. 2 (top) **Fig. 3** (bottom)

The original connection of the Radiola "44" power pack above; the later connection is shown below.

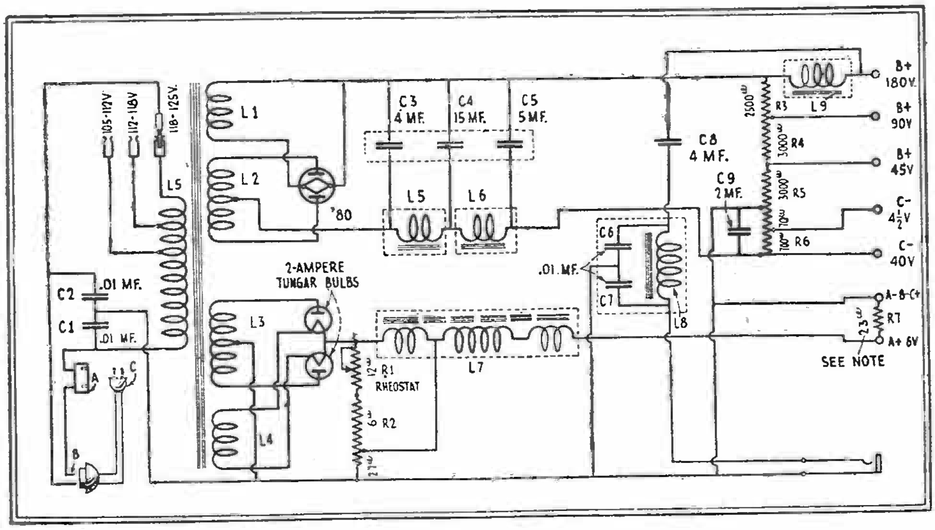

Fig. 1

In this circuit of the Stromberg-Carlson Model 403 and 403A Audio Power Pack is illustrated the connections of the Models 523 and 734 particularly referred to by the author.

The Sparton "301DC" employs six '27 tubes, just as does the A.C. model; it consumes 180 watts.

The Bosch "48DC" employs the same tubes as the "48AC" except in the output stage, where the former uses '71As.

The Stromberg-Carlson "635" has condensers across the A.C. input line; check these if the line fuses blow. (See Fig. 1, which shows a similar connection.)

The new Radiola "44" and "46" receivers use three '24s, one '45, and one '80. The "power detector" is resistance-capacity-coupled to the single '45 stage of audio amplification. In earlier shipments these sets included a resistor strip in the power pack, the connections to which were not correct for best results. The connection employed in the early models is indicated in Fig. 2. *The improved arrangement* in Fig. 3.

"Plays, but Lacks Volume"

In Fig. 4 is illustrated a peculiarity of the Bosch "28" and "29." Resistor R1 is the usual grid leak; R2 is a plate voltage control resistance. The customer will report, "My set plays, but there is no volume." Look for an open circuit in this resistor. It is pointed out that this 50,000-ohm resistor reduces 90 volts to the value required for the detector tube, being connected from the "B+" terminal of the first A.F. transformer, to the "+ 90 V" supply lead, the remainder of the resistors being in the pack.

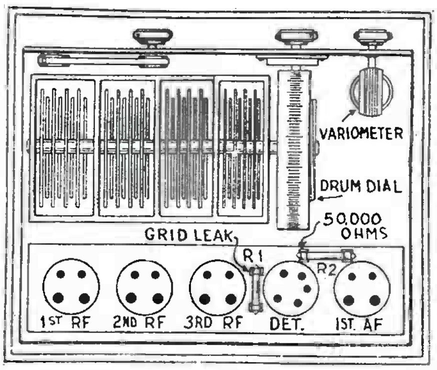

Fig. 4
Bosch "28" and "29" chassis.

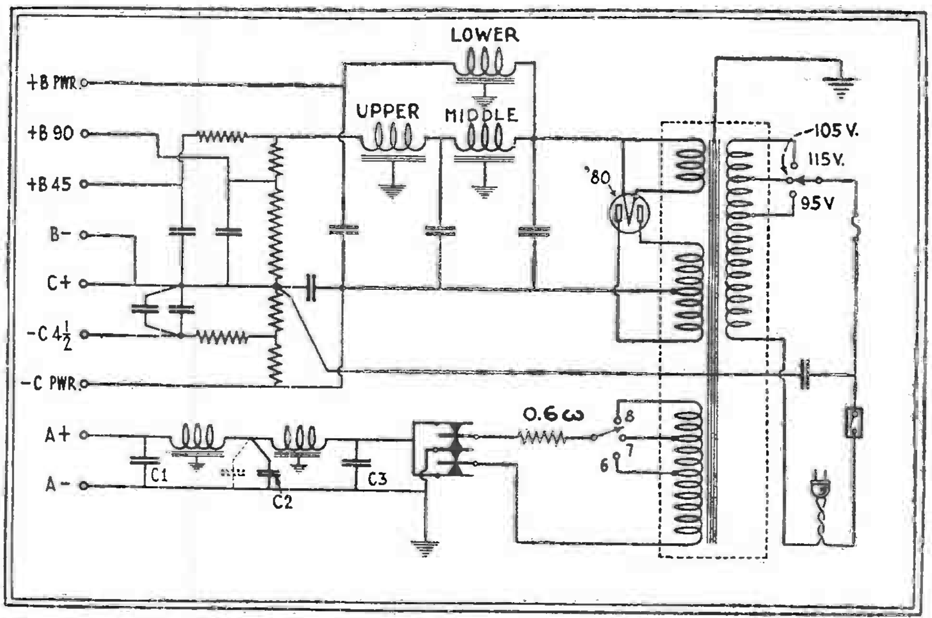

Fig. 5
"ABC" six-volt tube-supply unit of Fada types "86-V" and "82-W," illustrating an application of the 1500-mf. dry "A" condensers.

When making continuity tests on the Majestic "91" and "92" repairmen should not be disturbed by the 309-volt reading on the '27. This tube functions as a *power detector.* 309 volts is the correct potential reading at the tube socket.

Sonora receivers which "oscillate;" that is, have an oscillating R.F. amplifier stage, can be cured by connecting a 1-mf. condenser from the R.F. "B+" terminal, to ground.

When testing Philco, Silver-Marshall and some other receivers with dynamic speakers, look in the *reproducer housing* for the *output* transformer, instead of near the push-pull tubes in the set chassis.

Fada makes an "A-B-C" power supply unit using three Elkon, 1500-mf. "dry" condensers in the "A" filter system (Fig. 5). If a very bad hum is heard in installations using this power unit, check the "dry" condensers, C1, C2, C3. The trouble is most conveniently checked by disconnecting one condenser after the other, until the hum suddenly drops. As the hum is *less* with all the condensers out of the circuit, than with a single defective condenser in circuit, the location of the defective unit is simple.

The New Victor sets have a very low *hum level.* Consequently, an excessive hum instantly indicates a fault in the receiver. Check up the 2,000-ohm resistor between the cathode of the detector ('27) and ground. If this is open, you have located the cause of the hum.

The easiest method of replacing the condenser cord drive on the Majestic "71" and "72" is to remove the condenser gang and dial from the chassis. This is done as follows: first, remove the shield can over the gang; then unsolder all leads to the condensers, and also the pilot light. Finally, loosen the three screws holding the gang "bathtub" to the chassis, and lift both gang and dial from the chassis. After the cord has been replaced, the procedure outlined above is reversed.

Choked signals in the Radiola "41AC" are due to a defective condenser (in the pack) across the '10 bias resistor. Check this condenser.

The Radiola "18AC" uses only two 1-mf. condensers in the pack for filtering purposes, with heavy chokes and choke input.

Noisy Fada models "10" and "16" have been repaired by replacing the first audio transformer.

In the Crosley "Showbox" and "Show-Chest" (A.C. and D.C. models) if we find, after the set has been in operation for some time, that touching the tuning control results in crackling and generally noisy operation, it is caused by a bad contact between ground and the rotor of the gang condenser. Connect a wire from rotor to chassis to remedy this condition.

When a shorted "B" output is found in a Crosley A.C. receiver, look at the leads from the choke where they pass through holes in the chassis. The leads have sleeves made of live rubber; if it cracks and exposes the leads, vibration of the set may cause a short to the chassis.

Phonograph Adapters

With the vogue of power detection, it is well to bear in mind that it will be found difficult to use a phonograph pick-up with a set of considerable output. The output of the pick-up requires additional A.F. amplification, before it is led to the input of the power tube.

A high-pitched whistle in the Kolster "K20" and "K21," where the pack and audio amplifier is in the rear of the R.F. chassis, may be remedied by placing a grounded metal cap over the power tube (*not* the detector tube).

Zenith, Colonial, Radiola, Bosch

SOME Zenith sets are subject to the complaint that stations cannot be heard above 50 on the tuning hook to the tuning condenser scale. The variable condenser plates are made of a soft metal, and a mechanical shock will bend them, causing a short. If it should be necessary to make a soldered connection to one of these condensers, remember to make the contact of the soldering iron of very brief duration, or the condenser itself will be melted away.

Set Peculiarities

When fuses "blow" every time a Colonial "31AC" is turned on, save time and trouble by examining the *condensers* across the A.C. input side. (See Fig. 1.) Check these for a short, and consequent ground.

When a house fuse goes with the Radiola "41AC," test the pair of 110-volt *rectifiers* which feed the field winding of the dynamic speaker from the 110-volt A.C. They should show a resistance of more than 3,000 ohms, if in good condition. Also, if this model develops a hum, test the resistance of these rectifiers; remove the connections to their elements, and test separately. If a partial short or reduced resistance is shown, they will cause a hum. Replacement is indicated, in case defects are found.

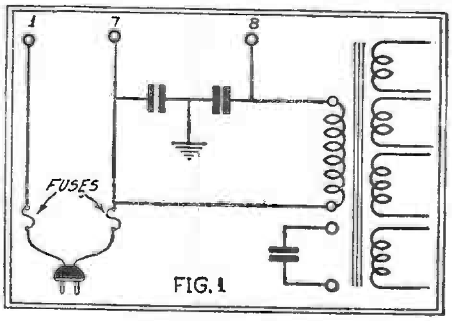

FIG. 1

Line-connections of the Colonial "31AC": 1 (maroon) and 8 (blue-white) lead to set switch; 7 is yellow.

If this set tunes broadly, it is possible to remedy the complaint by reducing the value of the grid suppressors; this, however, will often introduce unwanted oscillation. To maintain the normal sharpness of tuning, while preventing oscillation, connect a 500-900 ohm resistor across the primary of the third R.F. coil. This procedure has helped in every case when it has been tried.

When an absence of screen-grid plate voltage, and a corresponding drop across

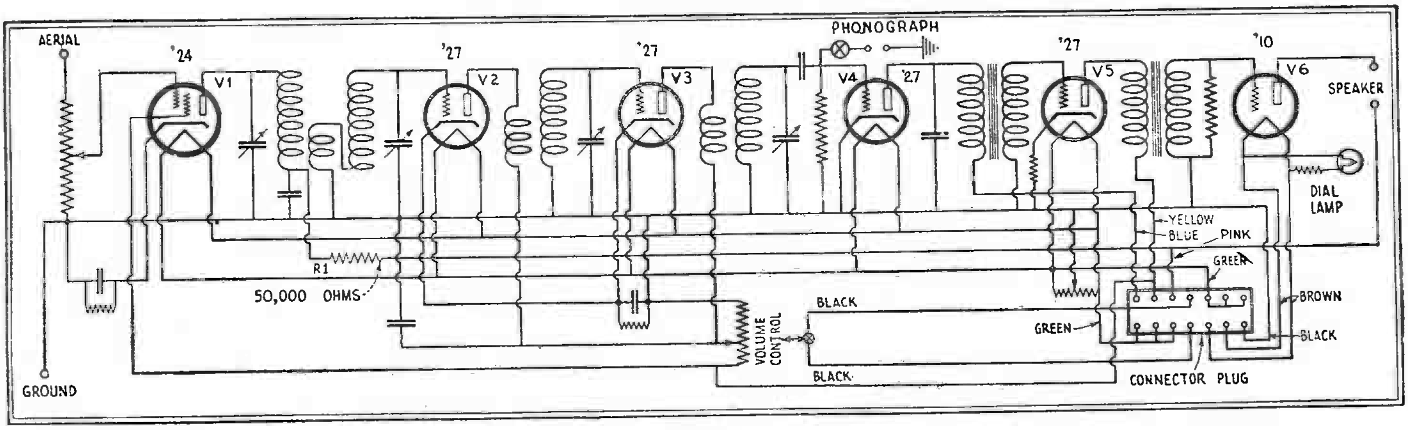

Fig. 6

The Zenith "42" in schematic circuit up to its terminal block. Volume control and switch are a unit. Note position of tuning condenser in the '24's output; also connection of the phonograph pick-up for audio amplification by V4.

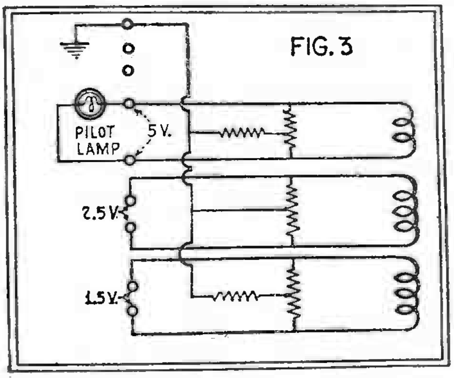

FIG. 3

Center-tap, biasing and pilot-light connections of the "Radiola 18AC."

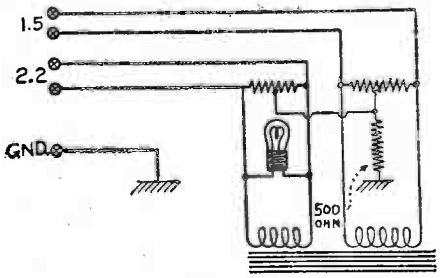

Fig. 4

How a single resistor biases five tubes in the Bosch "28" and "29."

other tubes, is found in the Zenith "42," the fault is in the first tuning condenser's compensator. There is a very thin circular piece of mica between the plates of this compensator, and a hole through it shorts the condenser, which is connected between the plate of the screen-grid tube and the ground. (Fig. 6.)

When a short is found in the bias of the '71A power tube in the Radiola "18AC," be certain that the pilot light or socket is not shorting to the dial. (Fig. 3.) Mushy and choked reception will be caused also in the Stromberg-Carlson "635" and "636" by a ground of the pilot light to the chassis (Fig. 5).

In the Colonial "31DC" a short between the primary and secondary of the push-pull input transformer may be quickly determined by testing (with battery and voltmeter) across the D.C. input plug, with the tuner-chassis plug removed from the pack. Any partial reading is an indicator of a bad transformer; no reading means no trouble.

The Bosch "28" and "29" have a single resistor to bias the three R.F. , detector and first audio stages; the center taps of the filament-balance resistors go to the same 500-ohm resistor, which is connected to "B—" (Fig. 4)

The new Zenith "52" has two stages of screen-grid R.F., a screen-grid detector and three audio stages—one '27 in the first, push-pull '27s in the second, and push-pull '45s in the power stage. If this receiver blasts on high volume, try reducing the plate voltage of the '45s by placing a resistor in the lead to the center tap of the output impedance.

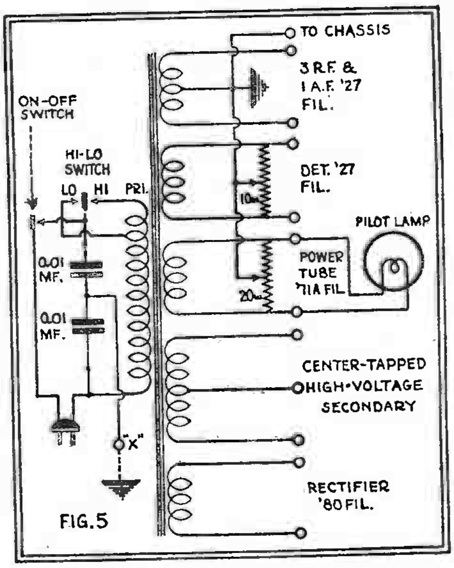

FIG. 5

Details of the Stromberg-Carlson "635" and "636" to which reference is made below.

Sparton, Fada. Stromberg-Carlson, Knight

THE Sparton "301" and 931DC" employ six type-484 3-volt Cardon tubes in series; if one of the tubes is withdrawn, the pilot light will "blow." With the pilot light either "shot" or removed, the filament voltage on the 484s will rise. Do not replace the tubes in a Sparton with R.C.A. or Cunningham tubes, or similar types; because the heater voltages in the set are too high. Therefore, replacing the burnt-out 484s with '27s will cause trouble.

In the Stromberg-Carlson screen-grid models, what may appear to be a fixed condenser in the plate circuit of the detector is, in reality, an R.F. choke L1 housed with two .0005-mf. fixed condensers C1, C2, whose center connection is grounded. The other side of each condenser is connected to one end of the choke; the combination serves as low-pass band filter. The writer had the experience of testing one of these models, and obtaining a "short" reading across the terminals of this choke. He immediately cut the "condenser" out as defective, and threw it out of a fourth-story window; only to walk down, a little while later, to recover it! (See Fig. 1.)

The "radio-phono" switch on the Sonora "44" should be examined, if a complaint of lack of volume is made after a week's reception. Clean the contacts of the switch.

In sets which use '26 type tubes in the R.F. and A.F. stages, with a '27 as detector hum has often been minimized by wrapping a sheet of tin foil, or putting a metal cap, over the *detector* and grounding it.

Zenith and Fada Models

In the Zenith "Fifty" series (Models 52, 53, 54, 532, 542) the biasing resistor for the screen-grid R.F. amplifier has been found open several times, in the writer's experience. This resistor, indicated by yellow in the color code, has a value of 400 ohms; the biasing resistor for the push-pull stage, which is colored black, has a value of 2,000 ohms. Fig. 2 illustrates this.

Readings of plate voltages and plate current on Zenith receivers should be taken with the volume control in "maximum" position, because the controls are either filament rheostats or potentiometers controlling R.F. plate voltages.

The Fada "16AC" and "20AC" are alike except for the type of reproducer to be used; the former model uses a magnetic, and the latter is designed for use with a D.C. dynamic, for the field winding of which it supplies current. Since the set itself contains the output transformer, only a Fada D. C. dynamic reproducer can be advantageously used with the "20AC."

When replacing volume controls in a Fada A.C. model, care with respect to the connection of the leads must be exercised. The *shaft* is invariably connected to the chassis.

It may be found that Arcturus 127 tubes of an early design will cause oscillation in the Fada "16," "20" and "70" models. The reason is that these sets were neutralized with Radiotron 227s, whose characteristics are somewhat different.

Radiolas and Reproducers

The "30A" Radiola is now being sold in large numbers, by many dealers. The writer has come across quite a number, of this model, which are noisy; so much so, in fact, that the slightest jar will cause the set to emit sounds as from the nether regions. To remedy this, remove the chassis from the cabinet, and clean the rheostats with steel wool; make both resistance strips clean and shiny, and wipe them with a clean rag.

The "44AC" and "46AC" Radiolas have a tendency to oscillate on high wavelengths. To remedy this trouble, adjust the compensators, which are situated in front of the condenser gang. It will be necessary to remove the chassis from the cabinet, to do so.

A very difficult task, unless one knows the knack of it, is to replace the "100A" magnetic reproducer chassis in the "30A" Radiola. Many remove the large and cumbersome power plant to get at the speaker, before they discover the right method. Here it is:

Remove the front speaker grill by pulling out one side (the left side, as you face the set) and remove the screen at the bottom of the cabinet. Loosen the four screws holding the unit; and the speaker will drop out, through the opening in the bottom of the cabinet.

It is easy to adjust a dynamic reproducer which has a screw to tighten the web of the voice-coil cone to the field magnet. If the receiver has a hum control, adjust this for loudest hum; or place aerial on the grid of the detector tube. Loosen the screw in the reproducer, to allow free action of the voice coil; and adjust the cone and coil until the 60-cycle note is heard loudest. Tighten the screw; and the voice-coil should then be found properly centered.

A fixed condenser (say .015-mf.) connected across the primary of the output transformer which feeds a dynamic reproducer will often correct what appears to be a rattle in the speaker. (Fig. 3.)

It Was All Wet

Some time ago, I was given a service problem on which most of the men in our outfit had tried their luck; the manager said it was "one of those jobs," and that I should take my turn at it. One of our customers had a Knight six-tube D.C. receiver, which he found almost inoperative after every shower, for a day or two.

I answered that it was a "pipe," and asked for plenty of aerial equipment; whereon the manager laughed, and said that the customer had already had three installations. Nevertheless, I took plenty of material, and went my way to that section of New York City called Brooklyn Heights. On my arrival, I found the set "percolating" in a very satisfactory manner; and a thorough examination soon convinced me that the trouble could not be in the receiver itself. There could be very little chance for the R.F. coils to absorb moisture; because the set was on the side of the room opposite the windows, and the apartment was heated by a hot-water system.

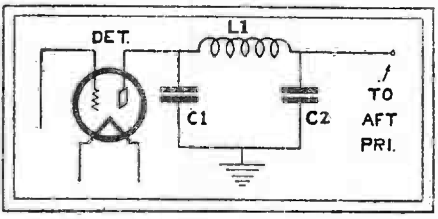

Fig. 1

Many modern sets have a special R.F. filter in the detector plate circuit; the schematic of this portion of a Stromberg-Carrlson set, for example, is shown above.

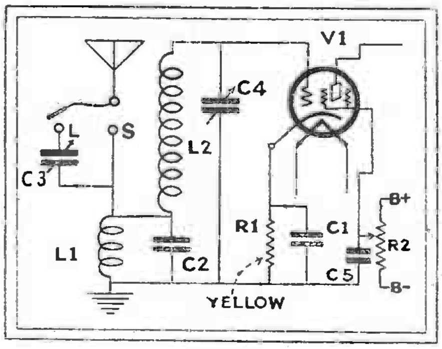

Fig. 2

Position of the biasing resistor for the screen-grid R.F. stage in Zenith radio sets of the "Fifty" series.

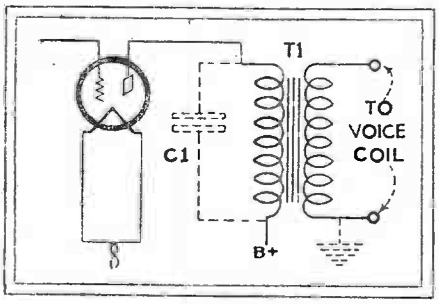

Fig. 3

"Rattle" in a dynamic will often be corrected when the primary of the reproducer's matching transformer T1 is shunted by a fixed condenser C1 of correct capacity.

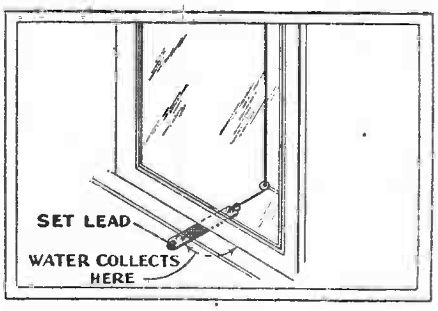

Fig. 4

The unexpected source of reduced signal volume, due to leakage from the lead-in in damp weather, illustrated above, caused much grief

I climbed four flights of stairs to the roof, and proceeded to tear down the old aerial, without even troubling to examine it, and to erect a new. The one I put up was 120 feet from pole to pole, eight feet above the roof; the lead-in was sixty feet of No. 14 heavily-insulated G. E. wire, soldered to the aerial by means of a small alcohol blow-torch, and well taped. All insulators used were of highly-glazed porcelain. The lead-in was then brought down diagonally across the court, to keep it well away from the wall; it was brought in by means of a lead-in strip, and taped up well to prevent corrosion of the clip. A wire, tested for continuity, replaced the lead inside to the set. The receiver worked a little better; and I then departed, satisfied that I had done a perfect job.

A few days later, the service manager informed me, the customer had just reported that the trouble had come up again and that, unless the job was completed, he did not want the set. I spoke over the phone to the customer, who said that it had rained the night before, and that he could now get only two stations. I hastened to the spot, and found his complaint well founded. A neighbor's receiver showed that there were plenty of stations on the air. The tubes were perfect.

I threw out fifty feet of loose wire in the room, and connected it to the set as an aerial. It brought in about seven stations, showing that the fault lay in the aerial installation. Running up the stairs, I inspected my job; everything was still shipshape!

I must admit that I had worked vainly on that job for about five hours when, suddenly, the stations began coming in, one by one, every ten minutes. I looked out of the window, and silently cussed that aerial, with every thought that can describe an aerial in uncomplimentary terms. Feeling myself beaten, I left the house, with the promise to return the next rainy day.

Three days later, I went back during a heavy rainstorm, and waited for something to happen. Sure enough, the stations began slowly fading out. I began at the set, and worked my way to the window. Here I tore up the lead-in strip and to my astonishment, WOR came in like a ton of brick. The metal weatherstrip was filled with a small pool of water at the base, and testing it, I found it grounded. That was the solution.

I punched a couple of holes in the metal weather strip to permit the water to drain off, and taped the lead-in strip well.

The customer was very much pleased (so was I) and offered me three brand new dollar bills. Last, but not least, the set stayed sold!

Complaints of noise, made to Service Men may often be traced to the strip which brings the aerial lead-in through the window to the set. The Fahnestock clips on these strips lose their tension by exposure to corrosion; this causes the outside lead-in to become loose in its clip. It is desirable, when making an installation, to tape this contact thoroughly.

SOME receivers, such as the "Radiola 64" and the Brunswick models using the same circuit, incorporate a reversed-scale milliammeter for visual adjustment of the tuning selector. The needle of this meter will often waver and fluctuate, because of R.F. current; the condition may be corrected by shunting it with a condenser of .0001-mf. capacity, as indicated in Fig. 1. A larger capacity seems to be less satisfactory.

It is sometimes necessary to balance and neutralize the superheterodyne; a procedure which, as remarked in the preceding article, has often been looked upon with apprehension. Undoubtedly, audio oscillators and 180-kc. oscillators are great helps in such a procedure; however, the job may be done without other apparatus than an insulated rod with a screwdriver tip, and a dummy UX-227 (a tube of the proper internal capacity must be selected). It will be necessary, first, to remove the chassis and its shelf from the console. The meter should be removed with its bracket, for easy replacement. Care must be taken not to disturb any connections to the power pack.

In Brunswick models, which employ a phonograph pickup, it will be necessary to remove the five-wire cable which is attached to the connectors on the chassis. After this, short the three middle connectors on the chassis. Then unsolder the wires to the condenser gang and free the gang from the chassis by removing the three screws that hold it. Place the gang several inches from the chassis, lengthen the leads from the chassis to the gang, and resolder. Switch set to "on" position and tune in a station at about 30 on the scale.

Referring to Fig. 2, adjust (with the insulated screwdriver) the third I.F. tuning condenser for maximum signal; repeat the procedure with the second and the first I.F. condensers. Now, place the dummy 227 in the first I.F. socket, and adjust the neutralizing condenser of that stage for minimum or no reception. Neutralize the second I.F. stage in like manner.

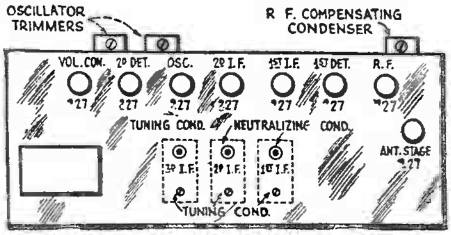

Fig. 2

Chassis layout of the "Radiola 64" and combinations of this popular superheterodyne.

We still have the two oscillator trimmers and the R.F. compensating condenser to take care of; but that must be done with the condenser gang back in position, and the chassis back in the console. Tighten the adjusting screws on the trimmers and the R.F. compensator, and then loosen one full turn.

When Radiola "44" and "46" sets oscillate, it is a sign that either the shield cans are not making proper contact, or the tuning condensers must be adjusted.

Give the Speaker Air

Some console cabinets, into which customers have had modern sets built, are not well adapted to the powerful dynamic reproducers used with them. This is because the back of the console is entirely closed; and, no matter how good a baffle is used in front, the speaker will rattle and vibrate. This may be remedied by cutting a circular hole, about the diameter of the cone, in the back of the console, directly behind the dynamic.

In the Zenith "50" series, it is sometimes very difficult to locate the breaks in an open R.F. coil. The wire on these coils is wound very tightly, and a break usually comes at the lug to which the end is soldered.

Abnormal hum in this model, when not caused by any electrical or mechanical defect, will be found to arise in the screen-grid tube in the detector circuit, which will test O.K.

Variable condensers in the Colonial "32-AC" and "DC" models may be easily damaged by excessive shock and vibration. The stator plates are soldered together and to a bracket which is fastened to a porcelain arm. In some cases, the bracket snaps, and in others the stator plates loosen from the bracket. This defect will cause the complaint, "No stations below 30," broad tuning and, especially, insensitivity.

D.C. Receivers

The Atwater Kent "41DC" may be made to tune more sharply and become more sensitive if the condensers are lined up. They are fastened by two set screws to the tuning belts. However, care must be taken in using a screwdriver; for if the stator plates are accidentally grounded, one or two burnt-out tubes may result and, possibly, a burnt-out grid resistor.

In many instances, faulty reception is caused by incorrect wiring of the "C" battery in the installation of D.C. commercial sets. The table gives the correct color combinations of the more important models.

Service Men are often confronted by the problem of neutralizing a D.C. set in which the tube filaments are wired in series. To insert a dummy '01A or '12A would break the filament circuit. To overcome this difficulty, use an adapter in which a 20-ohm resistor has been shunted across the "F" terminals; and insert the dummy tube in this.

With the Colonial D.C. sets, *never allow the ground wire to touch the chassis* in any way while the set is operating. This precaution will prevent burning out tubes.

GRID RETURN COLOR CODE

	"C" Voltage
RCA 18 and 51 D.C.—Black	—22½
RCA 18 and 51 D.C.—Green	+
RCA 33 D.C.—Brown	—18
RCA 33 D.C.—Black and Yellow	—12
RCA 33 D.C.—Red	+
RCA 41 D.C.—Green	—22½
RCA 41 D.C.—Brown	—16½
RCA 41 D.C.—Black	+
RCA 46 D.C.—Black and Brown	—18
RCA 46 D.C.—Black	—12
RCA 46 D.C.—Green	+
Sparton D.C. 931 and 301—Black	—22½
931 and 301—Red	+
Brunswick D.C.—Black	—22½
Brunswick D.C.—Blue	—16½
Brunswick D.C.—Red	+

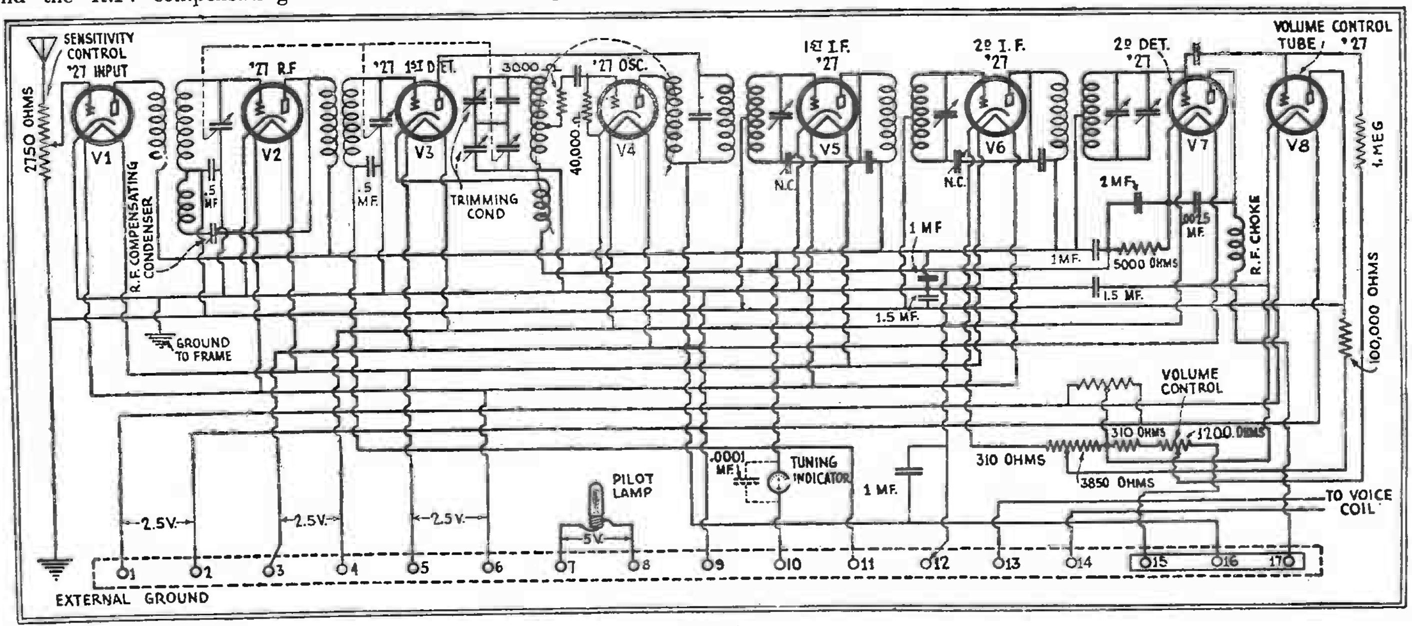

Fig. 1

Receiver circuit and terminal connections of the "Radiola 64." If radio-frequency current causes trouble in the tuning indicator, the very small capacity shown is an effective by-pass.

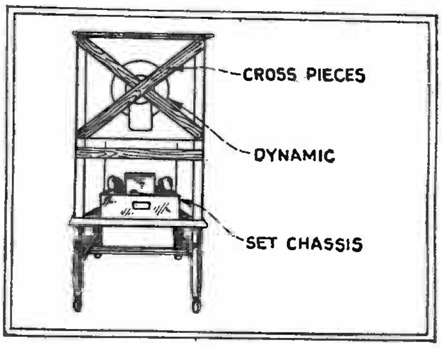

Fig. 1
The use of cross pieces is one way to suppress microphonic noises, due to vibration.

SERVICE MEN experience much trouble from microphonic sets in which the condition persists even after all tubes have been replaced. It will be found, usually, that the fault lies in vibration of the cabinet and chassis. Bracing the cabinet by means of wooden strips, properly applied, has been successful in reducing the condition to a minimum (Fig. 1).

In many cases, it will be necessary to float the chassis on rubber and felt; Radiola and Brunswick have prevented this trouble by mounting the receiver and the power pack on resilient rubber cushions. Sometimes, mounting the speaker on rubber has corrected microphonic conditions.

However, the annoyance may persist even after these changes have been made; in which case the fault is probably in the plates of the variable condensers; certain frequencies will set these in vibration, causing microphonic conditions. The writer has found this condition in sets on which much time and money had been spent. It is not difficult to locate the condenser; set the set in operation to obtain the howl, and touch firmly each plate with a hard rubber rod. The howl will disappear when the bad one is reached. The vibration is remedied by inserting small felt "piano washers" between the troublesome plates (Fig. 2).

Many sets, when on the point of resonance, will set up a loud hum in the speaker. This has almost invariably been cured by inserting a condenser of one microfarad, or higher capacity, between the "B—" of the set and one side of the light-line (Fig. 3).

Complaints of noise have often been overcome by a little experimenting with the aerial system. The writer has successfully used two aerials, diverging at an angle from the lead-in (Fig. 4). The best position, in which noise pick-up is balanced out, must be found by trial. Up to this writing, this method has been found very satisfactory in five installations, all in bad locations.

Radiolas and Brunswick Models

In the "Radiola 62," bad hum may be traced to the dry-disc rectifier (energizing the field coil of the dynamic reproducer) which works directly from the 110-volt A.C. line. Failure and weakening of the "stacks," of course, will cause this hum; but, if the rectifier tests perfect, look to the soldered connections in the power pack (Fig. 5). Cold-solder joints here will create abnormal hum.

In Radiola and Brunswick radio-phono sets which have a '71A audio stage, there are five terminals for phonograph connection. The phonograph cable is too short to permit removing the chassis for repairs or balancing; but it may be disconnected and its terminals shorted in the manner shown in Fig. 6.

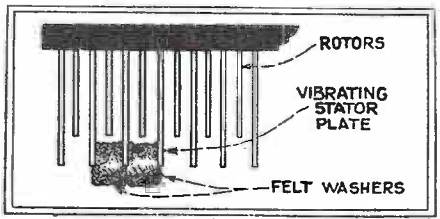

Fig. 2
Instead of the tube, the variable condenser plates may require damping, as shown, with soft material.

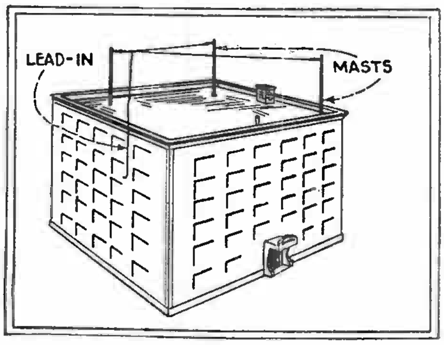

Fig. 4
In some localities, a certain local interference may be overcome by experiments with a double aerial.

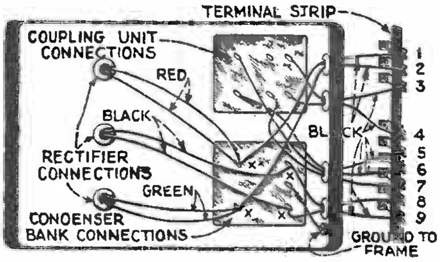

Fig. 5
High-resistance joints are a source of trouble wherever found. They may be suspected at the points shown (X).

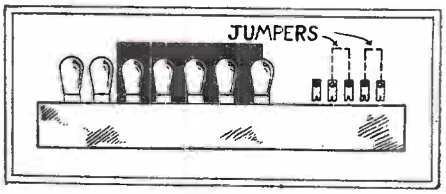

Fig. 6
On removing Radiola-Brunswick chasses for balancing, short the terminals shown during the operation. (This applies only to models using a '71A stage.)

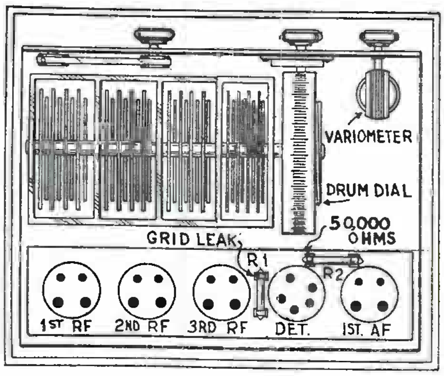

Fig. 7
Changing the value of R2 will change the tone of a Bosch "28" or "29".

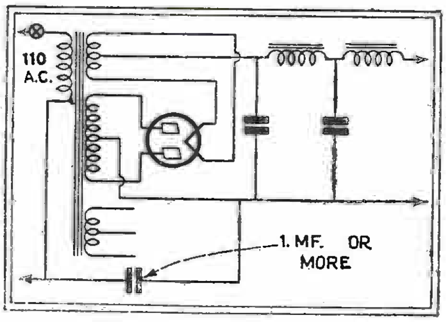

Fig. 3
The capacity indicated will often by-pass to ground an unpleasant hum. It should be of proper rating.

In all Radiola and Brunswick superheterodynes, the black ground wire must never be connected to the metal frame of the chassis from which it is led; as this will make the set inoperative. The correct method of adjusting the oscillation trimmers and the R.F. compensating condenser in these receivers is as follows:

The oscillator trimmer (at the right, as you face the back of the set) should be adjusted for loudest response to a station when the dial is set between 10 and 15; the trimmer at the left should be adjusted for loudest response with the dial around 80. In sets equipped with a tuning meter, these trimmers should be adjusted for greatest swing on the meter. The R.F. compensator should be adjusted on a low-wave station, with the volume and sensitivity controls full on. The compensator should be tightened, and then loosened till just beyond the point of oscillation.

Other Makes

In earlier Sonora models, using the Loft-in-White R.F. amplifier and 15-volt tubes, there is a rheostat connected in one side of the R.F. tube filament circuit; it will be found at the bottom of the R.F. chassis, behind the tuning dial.

The pitch of Bosch "Model 28" and "29" speakers may be varied by changing the value of the resistor (50,000 ohms normally) which reduces the R.F. voltage to provide a detector plate tap (Fig. 7). Cases of motorboating and audio oscillation in this model have been cured by an added condenser between the high-voltage side of this resistor and "B—."

In the "Zenith 50" series, an evasive bad hum has been traced to a bad section of the Mershon condenser; while "fading" which was blamed on bad screen-grid tubes has been found due to cold-solder connections to the tuning condensers.

Feed-back and "peanut whistles" in "Kolster K" models are often cured by reversing the primary connections of the first audio transformer. Other cases require shielding the *power tube*—not the detector tube. In the console sets, the speaker cord will cause feed-back when too near the detector.

THE lead-in window strip, used in the majority of radio installations, makes a neat and simple job of bringing the aerial into a house; unfortunately, after the strip has been in use for a short time, troubles arise. Most of these devices have Fahnestock clips, which are fastened by means of rivets to the insulated copper strip. The parts of the strip which are exposed to the elements, quickly corrode; and this produces high resistance in the electrical contact between the strip and the clip. The clip loses its tension, and the wire comes loose; thus causing "static." (See Fig. 1A.)

The best method to follow, when bringing the lead-in into the house, is to cut away a small portion of the wooden (or metal) sill, and tack the wire down, out of the way of the window. (Fig. 1B). The writer knows many Service Men who use this method to obviate future calls.

Ignition-noise pickup, in automotive radio, is reduced to a minimum by the insertion of resistors in all spark-plug leads, as well as in the main distributor lead. However, to shield the entire distributor head will be of value. The metal shield should be carefully insulated from the distributor itself, and a good ground made to the chassis. Care should be taken with the lamp sockets; all contacts, including those of the bulb, should be cleaned. The connection of the car's battery to "ground," or chassis, should be one of minimum resistance, and exceptionally sure mechanically.

Zenith Sets

"Fading" in models of the Zenith "50" series has been found, in many cases, due to the carbon-resistance volume control which, in these sets, is part of the switch unit. To remedy the trouble, the easiest way is replacement. However, if the unit is removed, all metal parts polished bright, and the resistor element carefully wiped with alcohol, the component may be found as good as new.

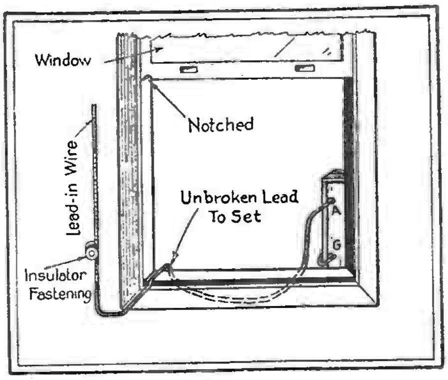

Fig. 1B
If the insulated lead-in wire is brought inside and a good connection made, it will last.

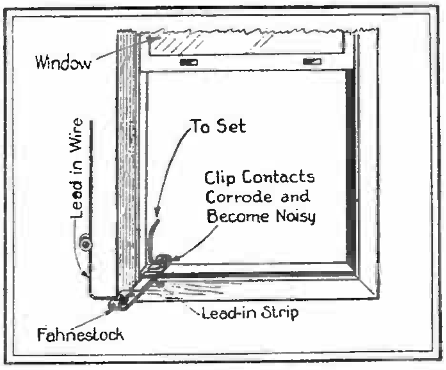

Fig. 1A
A common form of lead-in installation, which is very good until the exposed connections corrode.

The Zenith "39A," after operation for some time, may lose its original "kick." This is often due to the condenser tuning gang getting out of alignment. If the cover of its shield can is removed, the compensating condensers will be seen, each in front of its gang. Adjustment for maximum response is quickly made by turning the screws, one way or the other. See Fig. 2 for the layout of this chassis.

The cause of lowered volume in Zenith "15E," "16E" and "16EP" is frequently an open detector-plate resistor, which is indicated by absence of voltage at the detector socket "P." The 100,000-ohm resistor is located, not in the "B" pack(this receiver has two packs), but in the set chassis, at the audio end, and in a regular leak mounting.

Bosch Models

When replacing condenser drive cords on the Bosch "18," "48," "49," etc., it is wise to remove the condenser-gang shield and to loosen the dial from the gang shaft; also remove the dial-lamp bracket. At the same time, the low-value carbon grid resistors within the shield can should be tested; these sometimes open.

Intermittent reception or low volume, in the Bosch "28" or "29," may be caused by loosening of the screw which holds the connecting lug to the first tuning condenser; one terminal of the volume control is connected to this lug, the position of which is shown in Fig. 3. Constant jarring of the gang may cause this effect.

When neutralizing these models, it is of course necessary to remove the shield; its replacement affects all the adjustments which have been made and, sometimes, sets the receiver back into a state of oscillation. The writer employs shield cans, similar to those used with screen-grid tubes, to cover the R.F. tubes while neutralizing, and removes them before replacing the shield. Care must be taken to ground these tube shields to the chassis, and to see that they do not short to the socket terminals.

Miscellaneous Hints

"Fading" in Colonial "32" models occasioned much annoyance to the writer until the trouble was discovered sometimes as an open circuit in the 0.1-mf. blocking condenser of a resistance-coupled stage, which cuts off the signal without effecting any change in the voltage readings of the set. Not only this, but the condenser may test O. K., yet become open during operation of the set. There are three of these Sprague by-pass condensers in this D. C. chassis; they should be replaced by the tubular condensers supplied by this company.

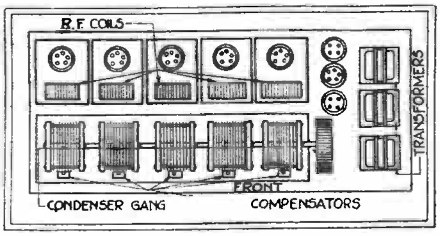

Fig. 2
The layout of the Zenith "39A" chassis; the positions of the compensating condensers are shown.

Incidentally, the addition of an "offset" screwdriver to the kit of the Service Man who works on Colonials will not be found amiss when a speaker's voice coil requires adjustment. (See Fig. 4.)

Noisy and unstable operation of Kolster "Model K" sets may be caused by a bad volume control; follow the same suggestion given above with regard to the Zenith "50."

The Stromberg-Carlson "Model 641" and "642" have two volume controls, which may occasion similar complaints. One of these components is wire-wound, and the other a carbon resistor: the former should be cleaned with fine sandpaper and given a fine coating of vaseline or Nujol; the other polished and cleaned with alcohol.

In the Fada "35," a loud hum will be caused by an '80 rectifier tube which is not up to par; a slight hum, when the push-pull '45s are not evenly matched.

In certain Philco models, of an early type, using two screen-grid tubes, the compensating condensers are located immediately behind the "bathtub" condenser. They have lock-nuts on the adjusting screws; loosen the nuts, and adjust the screws. When this is completed, tighten the nuts again, to prevent changes in the setting, caused by vibration in the set. (See Fig. 5.)

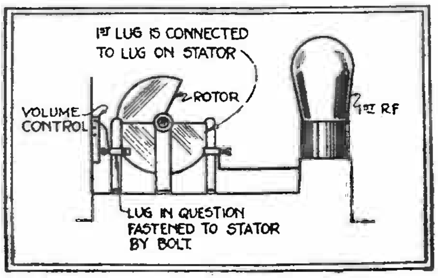

Fig. 3
The volume-control resistor in a Bosch "28" or "29" may work loose at the point shown.

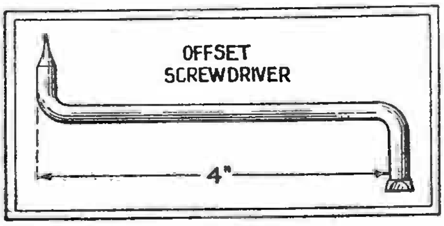

Fig. 4
The simple tool shown here will prove very convenient to tighten voice-coil screws.

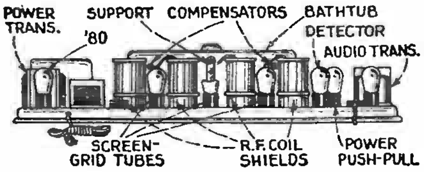

Fig. 5
In early "Philco" models with two screen-grid tubes the compensators are behind the gang.

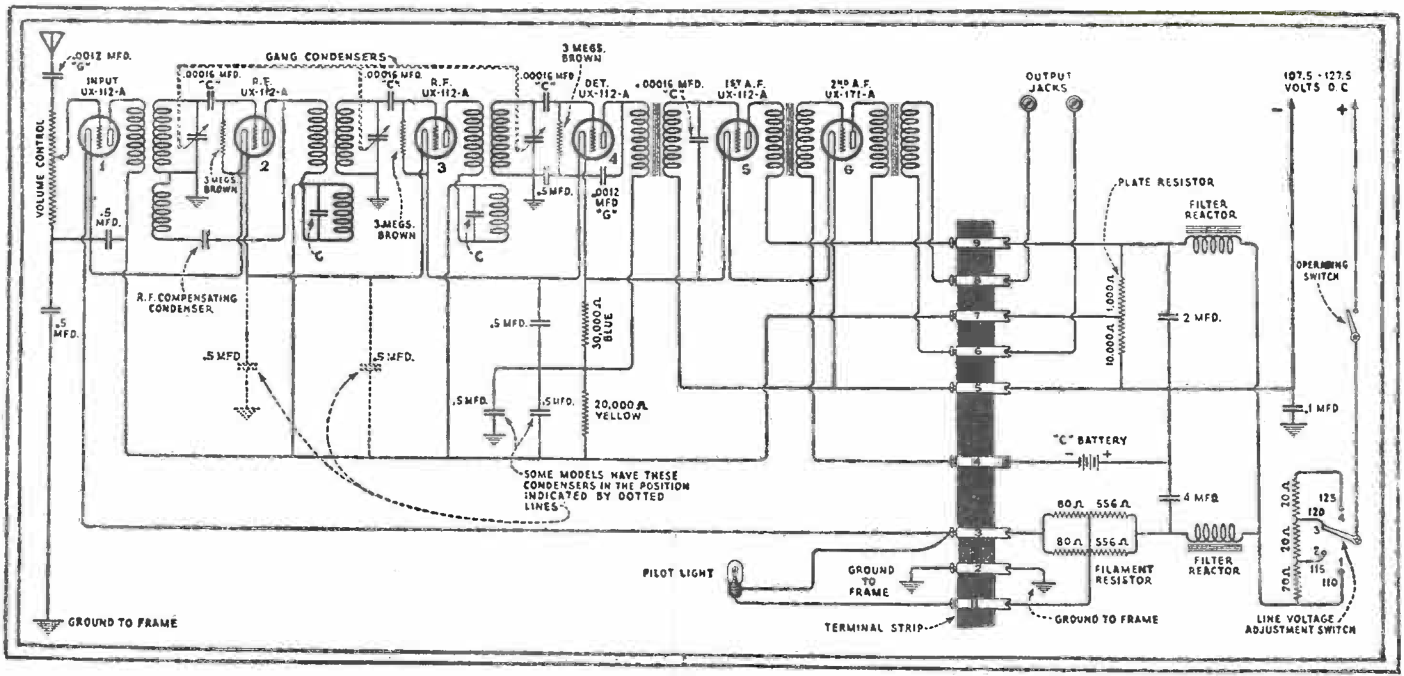

Fig. 2
This is the circuit of the Radiola "18 D.C." The Radiola 51 incorporates also a speaker. Observe the condensers C in the R.F. plate circuits. Similarly placed capacities are found in the Radiola "33" and some Peerless models.

MANY Service Men are confronted by the task of eliminating hum from a Philco "Model 87" ("Neutrodyne Plus"); this may be either almost tolerable or quite objectionable. Changing tubes, adjustment of the hum-balancer, reneutralizing, and reversal of the A.C. line plug result in little or no improvement; though some benefit may be obtained from cleaning all points of contact, such as the prongs of the tube sockets and speaker-plug receptacle.

When the Service Man has tried all these remedies, let him consider the circuit Fig. 1A) of the first R.F. stage of this receiver. The small, panel-operated, vernier variable condenser C1 is connected to the grid of the '26 tube V1 through a switch, which is in the form of a blade and makes contact with the rotor plates when they are entirely out of mesh. This adjustment of the control shorts the grid of V1 to ground—and thereby cuts out the hum—while the signal input from the antenna is put on the grid of the second R.F. tube, which thus automatically becomes the first.

Rewiring this stage, as shown in Fig. 1B, will remove the hum from any Philco "87" that is in good operating condition. The wire from the switch of C1 to the "G" prong of the socket of V1 is removed, and a lead instead taken from the grid terminal of the antenna-coupling R.F. transformer L1. The stator of C1 is connected to the stator of C, thus restoring the vernier to its task of shunting the tuning condenser. After this, it will be necessary to reneutralize the R.F. stages in the usual manner.

"Fading" Problems

Fading seems to be one of the most serious conditions which the Service Man encounters with present-day A.C. sets.

It may be found, in a Zenith "50" chasis, that fading follows an adjustment of the vernier stator of the first R.F. tuning condenser; or there may be noisy reception. This "stator," being variable, requires a flexible connection to the grid terminal of the R.F. coil; the lead runs from the under side of the stator down through the chassis to the coil. Continual operation may loosen the soldered joint; or a cold-solder joint may have been made originally. To correct this defect, it is necessary to remove the metal shield from the gang.

A baffling case was that of a Peerless "Kylectron" which would operate normally for half an hour, and then suddenly stop; only by switching the set on and off, several times, could the program be made to come in again. The first conclusion was that a condenser was defective; so the filter bank was replaced by one known to be in perfect condition. This did not help, nor did the replacement of all by-pass condensers. The chassis was interchanged with another pack, the pack with another chassis; each combination was perfect when hooked up in another cabinet. This compelled the conclusion that the electrostatic speaker was defective. It was found that, after the set had been in operation for some time, the speaker would short at some point or another.

In some Peerless models, as in Radiolas "18" and "33", open by-pass condensers have caused uncontrolled oscillation. These sets have split primaries, on the R. F. transformers, and low-capacity condensers C are connected across sections of the windings (Fig. 2). Open condensers may cause noisy reception and shorted condensers, weak reception or none at all.

Transformer Shorts

Analysis of a Stromberg-Carlson "846" showed a negative bias of 25 volts on one '45, and a *positive* bias of 160 volts on the other! When only the former tube was left in the socket, reception was obtained—though not ideal; there was no reception from the other '45. Since the biasing resistors were in perfect condition, and the secondary windings of the input push-pull transformers also, a continuity test was made between the primary and the secondary. It was found that

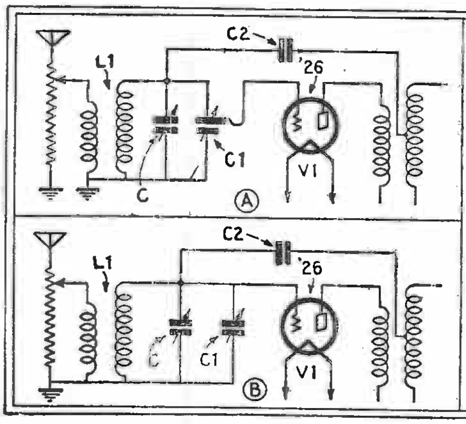

Fig. 1

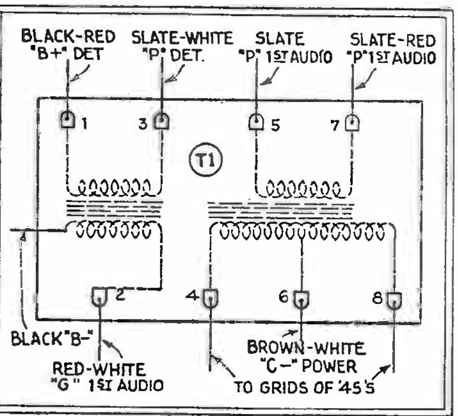

Fig. 3

At the upper left, the peculiar connection of the Philco "Model 87," in which the vernier condenser C1, when turned quite out, acts as a switch to cut out the first R.F. tube. Eliminating this contact, as shown beneath, may cure troublesome hum. At the right, the connections of the double-transformer A.F. unit used in the "Model 846" Stromberg-Carlson.

the former was shorted internally to the latter, causing this high positive bias on one '45, and a low negative bias on the other. In this model, both first and second audio transformers are contained in one case; so that it was necessary to replace the entire unit (Fig. 3, below).

A Service Man may have had the pleasure (?) of endeavoring to subdue oscillation in the Crosley "Gembox" ("Model 609" or "610") which incorporates no balancing or neutralizing condensers, or other stabilizers. The first step, of course, is to replace all tubes which are below standard. If this does not help, the angles of the radio-frequency coils must be altered; the most critical of the three, and the one most liable to be out of line, is the detector coupler, the first in the front of the set.

When a receiver emits a loud howl in the warming-up process, suspect a gassy '45 power tube, which will require replacement.

Determining Sources of Noise

SERVICE MEN have a simple test, to determine whether noise in a set is internal or external, by disconnecting aerial and ground leads. If the noise ceases when these wires are disconnected, the noise is caused either by a bad antenna system or by atmospheric conditions, etc. If the aerial is in good shape, then the conclusion may be reached that the noise is static or due to a noisy locality. However, this is not always true. Many instances have been found where, though the aerial installation may be seemingly perfect, it is not really so. If another aerial, nearby, is grounded, or crossed with a third aerial, and the lead-ins are near and parallel with each other, noise may be picked up by induction.

A very handy, simple, yet efficient, addition to the kit of a Service Man is a No. 3 crochet needle. Its purpose is that of a prong straightener. By inserting the needle into a socket, through the holes, each prong in turn may be caught by the nick in the needle and pulled up into place (Fig. 1).

Atwater Kent Models

On occasions of a complaint of choppy and husky reception from the A. K. "Model 55 A.C.," the trouble has been found to lie in the detector biasing resistor between cathode and ground. The symptoms resemble those of a lack of bias in the power stage, and the condition is hard to check with a low-resistance meter and a 4½-volt "C" battery. The value of the resistor in question is approximately 50,000 ohms.

When the A. K. "Model 37 A.C." shows up with "shot" filter condensers, the problem of the best method of repair arises; since these condensers are connected internally to the chokes in the pack (which is composed of two sections; the transformer and the filter block). If a new filter block cannot be obtained, the damaged unit may be inverted upon two blocks of wood in a can and heated (Fig. 2). The sealing compound used as a filler will soon melt and run out. If care is taken, the filter chokes and output choke can be salvaged. After cleaning the block, it is possible to replace the damaged eondenser with new, and finally run melted paraffin into the assembly.

If, after all tubes in an A. K. "Model 41 D.C." have been tested, and it has been determined that direct current of proper polarity is being obtained from the house-line outlet, test the R.F. chokes in series with either side of the line. These chokes are wound on small, round strips of composition, and located directly beneath the connection block in the pack. It is easy to repair them by rewinding with No. 22 S.C.C. or enameled wire. (The connections are shown in Fig. 3.)

An open circuit may be found in the voice coil of an A. K. dynamic. In many cases, this is in the leads running from the frame of the speaker to the coil; these are glued to the cone, and held to it by transparent adhesive tape, which covers the soldered connection between the leads of the voice coil and those from the frame. If vibrations of the cone during operation break this soldered joint, an open circuit is produced.

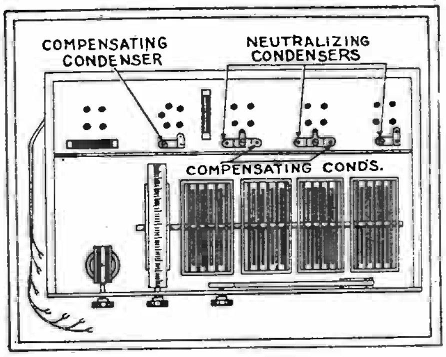

Fig. 4

The positions of the small adjustable condensers in the Bosch "28" are shown here. Some Service Men have had trouble in distinguishing the two groups.

Bosch and Others

The Bosch "28" tuner chassis has six adjusting condensers near the tube sockets, as shown in Fig. 4. Many confuse the neutralizing condensers with those used to trim the tuning condensers. The correct positions are indicated in the sketch.

Sometimes an abnormal hum in this set may be traced to a shorted R.F. bias. There are shunted across the '26 filament circuit two condensers in series, with their center connection grounded. If one of these condensers is shorted, it causes the condition described.

The Bosch, Colonial and Sparton D.C. sets use large filament resistors, which a severe jolt may crack. If so, the winding may be intact; and a large copper ground clamp of ordinary type may be then tightened about the broken section to hold it in place.

The Philco screen-grid and neutrodyne-plus models have a low hum level; if annoying hum is found and all circuits and tubes test O. K., it is a good policy to examine the speaker plug prongs, which may have become corroded and dirty. Clean the prongs with steel wool, and replace the plug in its socket carefully, to correct this condition.

In the Zenith "42," which has three stages of audio with a '50 amplifier, a complaint of fading, oscillation and noisy reception has been traced to the R.F. by-pass condenser which is situated near the combination switch and volume control. The lug on this condenser was found to be broken internally. Contact was thus made and broken, causing a drop in volume and excessive oscillation. The quickest remedy was to replace the condenser.

In new Majestic sets, where the receiver and pack are a single unit, the mistake of unsoldering the speaker leads from the connection block, under the metal shield of the chassis, has been made. This is unnecessary; for these leads are soldered to a plug which can be pulled from the chassis. Incidentally, in this model, the external line ballast has been replaced recently with a block containing voltage taps, to regulate the A.C. input to the set.

In Radiola and Brunswick superheterodynes, severe motorboating or excessive oscillation (if all tubes are O. K.) indicates a condition which cannot be remedied by adjusting the external oscillator trimmers. The only remedy is to correct the intermediate-frequency transformers.

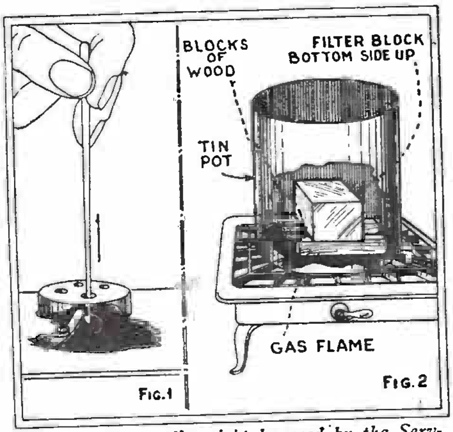

The crochet needle might be used by the Service Man to knit socks in his spare time (laughter) but as a matter of fact, it is a very handy tool for modern tube sockets. The process shown at the right is the only one of salvaging some parts; but care must be taken not to get the sealing compound too hot.

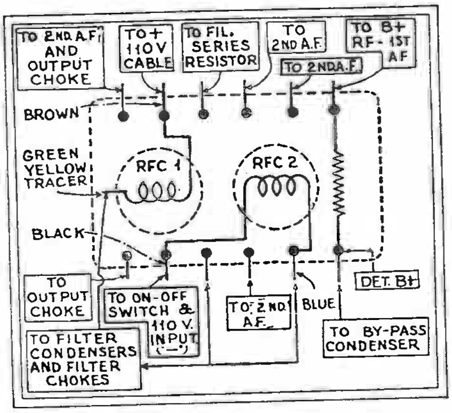

Fig. 3

In an A.K. "41 D.C." it is well to test the chokes RFC 1 and RFC 2, shown above. They are in series with the house line, to prevent interference from being picked up through this connection. These may be readily repaired.

MANY unnecessary calls on the Bosch "48" ("16," "17") series can be avoided if the Service Man, at the time of installation, carefully checks the variometer shield can (Fig. 1) to make sure that it is securely held, and well grounded. Failure to observe this may result in undesired oscillation and noise.

It takes but little additional time to be certain that the wiping ground contact on the variometer is properly bent, and makes a positive contact with the shaft. When removing the shield, care must be taken to avoid throwing the variometer rotor out of phase; which will cause lack of volume and sensitivity.

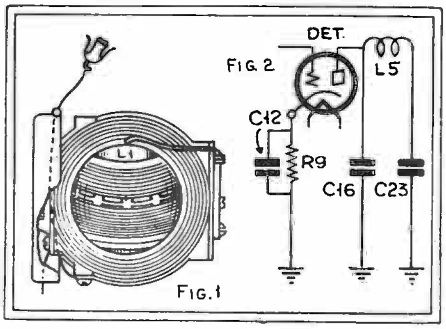

Left, the variometer of the Bosch "48," which must be properly shielded and connected; right, the detector by-passes.

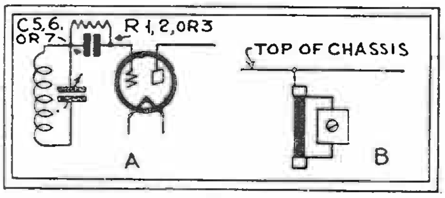

Fig. 3

Kolster "K20" grid suppressors are by-passed by very small condensers, as at A; the position of the parts is shown at B.

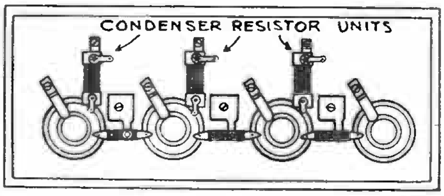

Fig. 4

Position, in the Philco "87" of R.F. plate resistors which include their tubular by-pass condensers.

A common cause of noisy reception, in this series, is found in apparently perfect detector plate by-pass condensers. There are two of these, in parallel; disconnecting them, alternately, will show which is at fault. They are .001-mf. capacity. (Fig. 2).

When pilot lights on the Majestic "90" series take to burning out, substitute a flashlight bulb rated at 3.8 volts. Although in a 2.5-volt circuit, this will throw sufficient light on the dial plate, and will last much longer. If pulling the first A.F. '27 tube out of the socket makes no apparent difference in the volume, it is almost certain that the biasing resistor is open. This is usually a wire-wound, flexible component, connected from the under lug of the "4407-P," by-pass condenser to the metal frame of the first audio transformer.

In Fada A.C. models "10," "16," "15," and "35," the leads from the R.F. coil leads are soldered to lugs, which are fastened to the coil bases. These lugs protrude from the shields, for convenience in making connections; brushing against them, and vibration, cause them to shift, and result in shorts. This results in complaints of low volume and, sometimes, no reception.

Hum in a Zenith "42," which uses three stages of audio—the last a '50—has been found due to the center-tapped resistor across the filament of the second A.F. stage. This resistor, which is wound on an insulating form and riveted to the chassis, sometimes shorts to the chassis through its lugs.

In the same model, after the shield cans have been removed, it is necessary to replace the leads in the small grooves, provided for them in the shields, with care to avoid cutting the insulation when the cans are replaced.

Kolster Models

It is possible that several readers have been experimenting to determine the cause of microphonic conditions in Kolster "K20" sets, which have been marketed in large numbers. A number of Service Men among whom was the writer, considered the problem from various angles—such, for instance, as proper cushioning of the chassis to prevent vibration being transmitted from the speaker. Several makes of '27 tubes were tried, to find out whether any were less affected by vibration.

It became evident that the microphonic condition was due, at least partially, to the fact that the receiver was too near oscillation; and methods of reducing the amplification were tried. The first was to increase the value of the grid suppressors in the set Fig. 5 However, while this made the set less sensitive to microphonic noises, it also reduced sensitivity.

It was found that by removing either the second or the third of the small by-pass condensers which are across the grid suppressors, the set was thrown farther away from oscillation, without seriously affecting the sensitivity; these condensers are factory-adjusted and sealed with wax, and attached to the grid suppressors in the manner shown in Fig. 3. Placing weighted caps upon the tubes is also a helpful procedure to stop microphonics.

Another complaint, in this model, was of noise which could not be traced except by removing all R.F. tubes, indicating that the fault was in the detector, the audio end, or the pack. In some cases, the voltage divider was found defective; this component is enamel-coated, and cracks or irregular distribution of the enamel are followed by trouble due to moisture, corrosion and changing values. In other cases, more common, the audio transformers are to be blamed. To obtain compactness, both the first- and the second-stage transformers are housed together; and often the entire unit must be replaced. However, impressing a high voltage upon each primary (after disconnecting the leads) sometimes effects a cure of the noise.

Colonial Sets

With its novelty, the Colonial "33AC" also recently stumped a number of Service Men; the complaint was in all cases, oscillation on the highest waves. This was finally traced to an open condenser, in the double unit which contains the by-passes from plate and screen-grid of the second '24 R.F. tube. This component is found on the under side of the chassis, near the left front corner; it is metal-clad, and the value of each capacity is 0.2-mf.

Low volume and poor quality on the "32AC" may be due to any of a number of causes; one which may be readily overlooked is open field winding in the dynamic repro-

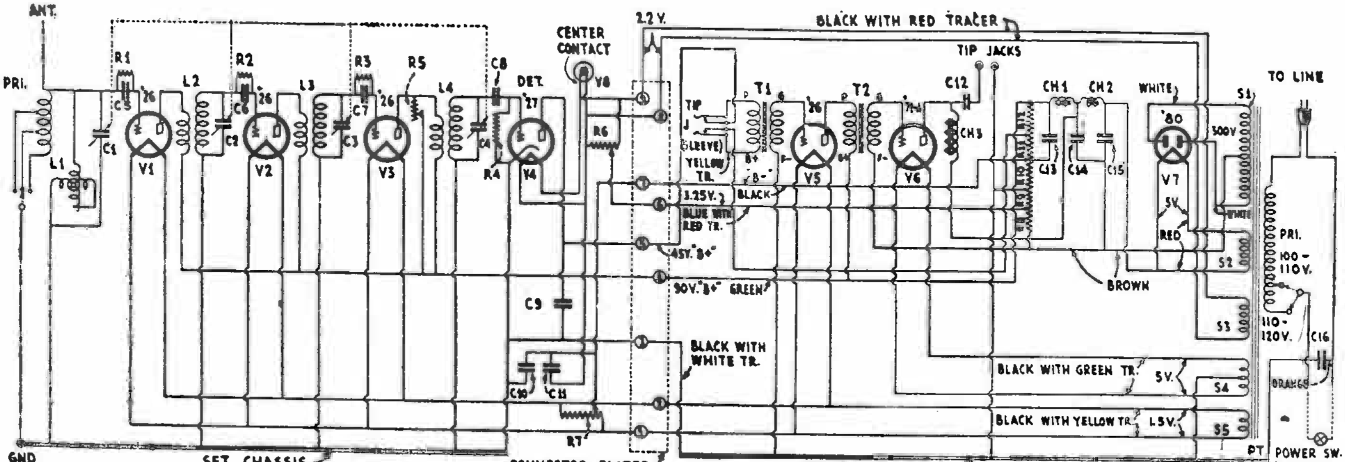

Fig. 5

Above, the circuit used in the group of Kolster models K26, K22, K25, K27, K37 The details and connections of the R.F. chassis (left) and the audio amplifier and power pack (right) are those of the 60-cycle models.

ducer. Usually, the dynamic used with an A.C. set obtains the necessary field current from a series connection with the power pack, in which it serves also as a filter choke. In this Colonial model, however, the field coil is connected across the entire output of the pack; and tests for continuity must be made with the field leads disconnected from the set. By turning the chassis on its side, and placing a metallic object (such as a screwdriver) near the field, it may be readily determined whether the coil is open or faulty.

When installing a new volume control in this receiver, it is necessary to remove all the hardware from the old unit to replace it on the new. This volume control is of dual type; the two parts being held together by a single long screw and nut. When it is placed in position, be careful that the screw and nut do not short to the chassis anywhere. The screw makes contact with the arm of the outer control, which is the antenna resistor; and will short the aerial to the chassis if it makes contact with the latter.

Another cause of fading in this model may be the red carbon resistor in the first R.F. stage; shorting this out of circuit will often increase the volume of reception but, at the same time, decrease the selectivity of the receiver. If this resistor is open, replacement is the surest and safest method.

In the "32 DC" model, shorting the red resistor in the third R.F. stage may produce a marked increase of selectivity. Also, connecting a 0.5-mf. condenser from one side of the line to one of the R.F. line chokes will greatly improve clarity and volume.

Be careful of the metal-braid shielding which encases the aerial and grid leads of the first R.F. stages; a short to the shield here will cut off reception.

Philco

Some time ago, fading in a Philco "65" was brought to the attention of the writer; the symptoms were alternate normal reception and fading, as often as every two minutes. Countless tubes were tried in the set; receiver and pack were thoroughly checked for continuity and voltages, and, after much work, it was found that the fading was accompanied by a lessened detector plate voltage, while other readings showed no marked decrease. The first A.F. transformer was being carefully watched when it was noted that pressure, put accidentally on the detector by-pass condenser, caused a similar decrease in voltage and the resultant fading. This condenser, a Dubilier .001-mf., is one of the type riveted together, and vibration had caused it to loosen. The remedy was replacement; and this accidental discovery led to clearing up several similar complaints.

In the Philco "87" neutrodyne, there are used some small tubular components, which seem to be condensers of a common type but, in reality, are both resistors and condensers (Fig. 4). The resistance is in an R.F. plate circuit; the condenser is its bypass. If the resistor is open, there will be no plate voltage on that particular stage; but the Service Man who takes the unit for a mere condenser will be misled. If the condenser is shorted, there is a decrease of plate voltage at the power tube, and none at the R.F. plate; if it is open, oscillation in the circuit will occur.

Freshman Sets and Packs

A few years ago, there was a very large sale of early Freshman electric models, which obtained general distribution; very little information for servicing them, however, was ever issued by the makers.

For this reason, power packs intended for different models were often mistakenly interchanged, and leads were therefore hooked up incorrectly. A recent case, which came to the writer's attention, was of this nature. Four '26 tubes were burned out, first, and then the power transformer; because the leads were wrong. To help reduce the number of accidents like this, the following codes are given:

Freshman "Equaphase," with "Model G-60-S" pack, has the following arrangement of its numbered terminals: 1, 2, A.C. 1½ volts; 3, 4, A.C. 2½ volts; 5, 6, A.C. 5 volts; 10, "B—"; 7, D.C. 45 volts; 8, D.C. 145 volts; 9, D.C. 225 volts.

Freshman "Masterpiece," with 15-volt model pack: 1, 2, A.C. 5 volts; 3, 4, A.C. 15 volts; 5, D.C. 165 volts; 6, D.C. 90 volts; 7, D.C. 30 volts; 8, D.C. 9 volts positive on detector; 9, common negative grid return.

Freshman "Masterpiece" E.R.A.C. model, and pack: 2, 6, A.C. 5 volts; 1, 8, A.C. 2½ volts; 3, 4, A.C. 1½ volts; 9, "B—"; 5, D.C. 135 volts; 7, D.C. 50 volts.

The color code on this last combination is: 1, black; 2 yellow; 3, blue-white; 4, blue; 5, red; 6, orange-blue; 7, brown; 8, black-green; 9, green.

Adjusting the Fada "Flashograph"

THE new Fada sets incorporate the "Flashograph," which lights a bulb when a station is reached on the tuning scale. To set this, when a station has been tuned to its highest peak, a key, furnished with the set, is pushed through the hole provided in the panel. The dial is thereby perforated at this point; and, every time the dial is set to the same point, the Flashograph operates. It is good policy not to use this key to perforate the dial until the set has been installed in the customer's house; for oftentimes the settings necessary there are different from those which would be found in the store. (Fig. 1.)

Points to Watch

Complaints of lack of power, or weak reception, on a Kolster "Model K" may be caused by a shorted vernier tuning condenser, which cuts out one stage, in effect. This condenser is located at the end of the tuning gang nearest the detector (Fig. 2); the trouble is caused by the mica falling out and allowing the plates to touch.

Several Federal sets, of a popular model, were returned to the shop because of failure of the power packs. After melting out the tar and pitch which sealed in the components of a number of these packs, and tracing the circuit, the trouble in each case was found in the "B—" return, a non-insulated wire which emerges from the compound and is soldered to the metal container. When vibration breaks this wire loose from its moorings, no "B" voltage can be obtained. (See Fig. 3.)

A loud hum in the Radiola "17" or "18," which is not caused by a shorted filament winding or biasing resistor, may be attributed to a faulty volume control. This resistor has its movable arm connected to the grid lead of the first R.F. tube.

A source of noise and fading in a Freed-Eisemann "NR-80" was found in the volume control, after a thorough preliminary test of the tubes and aerial. This model uses a volume control of unusual type, and it must usually be replaced. Cleaning the resistor usually helps but little and for a short time.

When replacing the antenna tuning variometer in an Earl D.C. model, care must be taken that the shaft and the unit proper are shielded and insulated from the chassis. If the shaft shorts to the chassis, something goes! (Sometimes an R.F. coil, most likely a tube.)

An owner of a Grebe model (using four '26s, a '27, a '71A and an '80) complained of hum which was not present when the set was first operated. The hum control could not be found at the first search but, after the chassis was removed, it was discovered just behind the detector. Only a six- or eight-inch screwdriver is needed to make the adjustment. (Fig. 4.)

When fading or intermittent reception from a Zenith "Series 50" screen-grid model is reported, it is a good idea to pull on every wire; better still, sweat every soldered joint that is accessible. Loose or corroded connections may cause serious trouble. The same is true of Philcos; reheating corroded joints may correct intermittent reception.

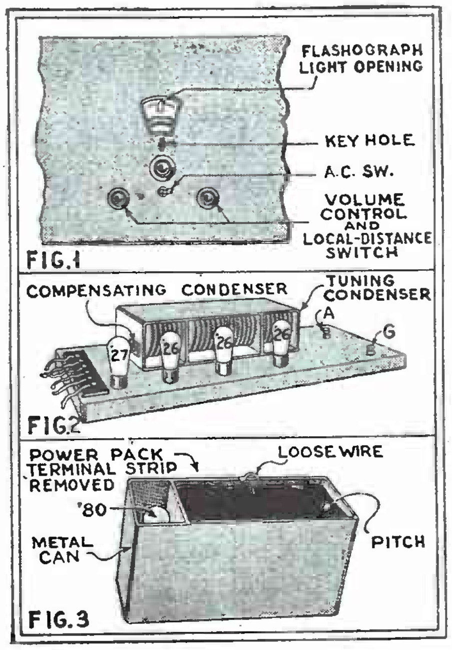

Above, the arrangement of the "Flashograph" tuning indicator in Fada models; center, a compensating condenser position in the Kolster K; lower, the internal ground lead in a Federal power pack, which may require resoldering.

On newer Philco models, the common can which shields the screen-grid tubes is held

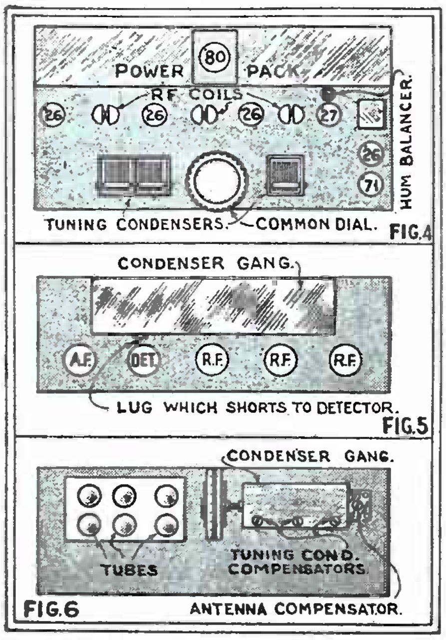

FIG.4

FIG.5

FIG.6

The upper view shows where a hum control may be found in certain Grebe sets; center, a detector grid connection which may short to the tube shield in some Peerless models; lower, the antenna compensator of a Sparton set, which may require resetting.

in place by four or five screws; if this shield is not tightened securely, oscillation results.

Lack of Control

If radio reception increases in a Colonial "Model 32" A.C. set when the phono-radio switch is turned to phonograph position, the trouble may be found in an open detector-cathode resistor. (The color is black.)

In the same model, a report of fading and noise not attributable to the three 0.1-mf. Sprague condensers has been traced to a broken porcelain bracket in the variable condensers. Vibration then causes the stator to shift, causing fading and, when the plates short for a moment, noise.

In replacing a Bosch chassis ("18," "48," "28," etc.) take care to place it in the cabinet in such a position that the shafts of the volume control and the tuning gang do not short to the escutcheon plate. This will cut out the first R.F. stage and most reception, in the "28" or "29"; and in the screen-grid models, hand capacity or lack of reception results.

In some Peerless models, the detector grid connection is a lug, fastened to the bakelite strip directly back of the detector tuning condenser; it sometimes shifts and shorts to the shield can covering the detector tube. (Fig. 5.)

After changing speakers and overhauling the chassis, to remedy intermittent reception on the Fada "15," "25" or "35," the trouble was traced to poor tinsel connection to the speaker cord tips. Change the cord, or sweat the tips.

Few Service Men bother to adjust the antenna compensating condenser of every Sparton set. This should, however, be adjusted from time to time, as necessitated by climatic and seasonal conditions. (Fig. 6.)

Some have condemned the volume control of a new Stromberg Carlson A.C. because it had no effect on volume, without observing that the local-distance switch was in the distance position. In this receiver, this control is combined with the A.C. switch; the latter turns clockwise to turn on the set. When it is then pushed in, the set is employing the "distance" arrangement; when the switch is pulled out, it is set for locals.

Fading in the Amrad "Nocturne"

RECENT cases of fading encountered in the Amrad "Nocturne" ("Type 7100") were finally traced to the fuse block, which is fastened to the side of the cabinet; this has two fuses, one in either side of the line. If the clips holding the fuses become corroded and lose their tension, the resulting poor contact will cause fading; which will be evidenced by flickering or dimming of the pilot bulb. This, however, is difficult to detect; because the dial is black with a white scale, and a slight change is not at once apparent. It is a good policy to clean all fuse contacts and bend up the clips, thus possibly preventing a repeat call.

The other cause of fading in this model (not counting a poor '27 as the detector, or a loose element in one of the '26s) is found in the audio transformer leads, which pass from the unit through holes in the chassis to the terminals under the chassis. The openings are just large enough for the leads; strain and vibration may cause a short to the chassis, when the metal has cut through the insulation of the leads. Pulling on the latter, while the set is in operation, will quickly show whether fading is due to this cause. These transformers, which are mounted in bronze housings, may sometimes be repaired, in case of a short between the windings, by heating them. The wax compound will flow and introduce an insulation, between the shorted primary lead and the case.

Connections to be Watched

When replacing volume controls in the Victor "32," "45," etc., care should be taken to resolder the proper wires to the proper variable resistor. This chassis incorporates a dual volume control; one resistor is an aerial potentiometer, the other is across an R.F. absorption-circuit winding (Fig. 1). The arm of the latter resistor is fastened to the metal construction of the unit and, consequently, is grounded when mounted to the metal chassis; the other, coupled to the first by a strip of bakelite insulation, should be connected to the grid lead of the first R.F. tube.

The writer has previously mentioned causes of fading in the Colonial "32AC"; in this model, directly behind the push-pull input transformer, there is a triple-lug flat bypass condenser marked "4407-P" which will cause fading if it open-circuits. Tapping lightly with the back of a screwdriver, while the set is in operation, will quickly show if there is a defect in this condenser.

In this receiver, also, several fixed carbon resistors are used in different parts of the R.F. circuit. Such a component is covered at one end with black spaghetti, with a lead several inches long; under the spaghetti is a connection to the pigtail of the resistor. If this connection is not properly soldered, intermittent reception and fading may be caused.

On the new Colonial "33," complaints of lack of volume have been caused by the slipping of the braided copper belt on the drum carried by the control shaft; the result was that the ticklers were not properly varied. This is easily remedied.

An elusive hum on Philco phonograph combinations, not occasioned by a bad tube, has been removed by grounding the framework of the phonograph motor to the set chassis.

The connections of the volume control in the Victor "32" and similar models; two potentiometers are built into one instrument, but their arms are not electrically connected. The arm of one is grounded, the other is at an R.F. voltage above ground. Replacements should be made carefully.

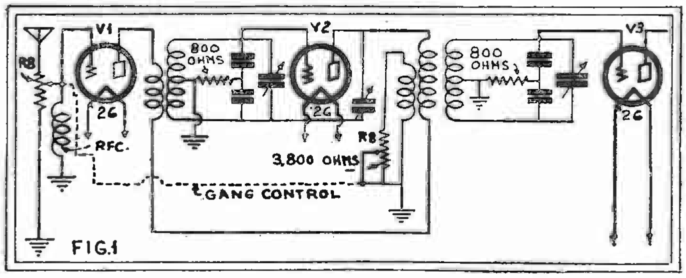

FIG.1

Shielding the '27 Detector

In the latest Atwater Kent screen-grid model, a metal shield resembling those used for the screen-grid tubes is slipped over the '27 detector, and grounded to the chassis through the screen-grid cap lead. This is furnished with the set (packed with the ground clamp) and should not be omitted; as it eliminates hum and microphonic conditions.

Many Service Men have been regularly replacing the '99 tube in the Peerless Kylectron; some use a '20, which lasts longer. The writer has found, however, that an '01A does the trick and removes the danger the escutcheon is replaced, it is necessary to note that it lines up, so that the key may be inserted into the "Flashograph" mechanism. However, if the replacement bulb

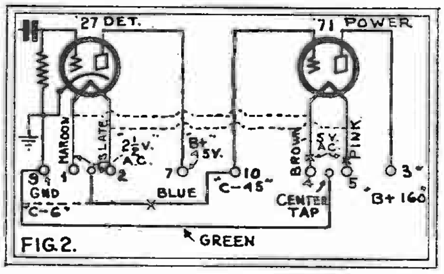

FIG.2.

Replacement of a '71A with a '45 in the Kolster "Model 65" gives better output.

still fails to function properly when the dial is turned, it will be necessary to take out the chassis to get at the flasher mechanism.

In the Kolster "65," all cases of fading have been traced to the filament rheostat; corrosion on the contact arm and resistance strip causes a variation in voltage on the '26 tubes. Cleaning with steel wool and bending down the slider to increase the contact pressure will remedy this trouble.

Rearranging a Power Stage

On this same model, if slightly greater output is desired, it will sometimes be found advantageous to replace the '71A with a '45. No rewiring of the chassis is required; the center tap of the '27 filament winding, which is grounded, should be disconnected and led to the No. 10 tap (Fig. 2). The filament leads to the power stage are disconnected from taps 4 and 5 and fastened to Nos. 1 and 2; this will place the needed 2½ volts on the '45. All sets that have been changed over in this way have given clearer output.

The only connections from the Sparton pre-selector to the R.F. amplifier are to the chassis (ground) and through a pin which fits into an opening in the amplifier to make connection with the grid of the first tube. If the amplifier is removed for any purpose (say to replace the pilot light) be certain that this pin is seated properly in the spring eyelet of the amplifier when the latter is replaced.

Electrolytic Condenser Contacts

In the Sparton "930" and similar models, noisy and fading reception has been caused by poor contact between the can (negative electrode) of the electrolytic condenser and the chassis. This condenser is seated in a circular opening in the chassis, to which it has no other electrical connection. If the copper corrodes, it must be cleaned to restore proper contact. Sometimes it is necessary to bend up the metal flange of the opening, which is punched into the chassis, to give the needed pressure.

Choppy reception, or none, on the Atwater Kent "37," "40," etc., and Kolster "K20" sets, when not caused by tube or voltage troubles, may be due to a broken-down or open speaker condenser. In the A.K. models, "shooting" the condenser with high voltage, or 110-volt A.C., may be tried.

In a Zenith "52," which had previously been serviced by several men, an unusually difficult case of fading was recently encountered. The volume control and the Mershon electrolytic condenser had previously been condemned and changed; tubes had been tested, retested and exchanged. After a thorough overhauling by tightening up all screws and nuts, realigning the condenser gang, testing all by-pass condensers by charge-and-discharge methods, the receiver was taken to a convenient place to resolder all connections. The trouble was then found in the tiny wires which are fastened to the eyelets of the small R.F. chokes under the chassis, and at the points where the wire passed up through the eyelets. The complaint in this case was not gradual fading, but sudden rise and fall of volume; and repairs at the points mentioned remedied the trouble.

When a manufacturer urges the use of a certain make of tube, it means usually that it will be necessary to rebalance the tuning circuit to compensate for the characteristics of other tubes; as in the Radiola, Fada and Bosch.

A tube with too high a plate current is sometimes noisy, and will spoil reproduction from a good set.

In the Sparton "930," or similar sets, unmatched or gassy "Type-182" power tubes will cause a hum which is annoying and difficult to locate.

Midget Receiver Peculiarities

"MIDGET" sets have been on the market but a few years, and their peculiarities are now being learned. The "DeWald" D.C. midget receiver uses the new '32 and '31 two-volt tubes. If the ground wire should short to the metal chassis at any point, this set will become inoperative through the failure of the filament circuit; which will be caused by the "blowing" of the 6-volt pilot lamp. With this set, it will be a good policy to insert a condenser (about 0.1-mf.) in series with the ground lead, and tape this well; so that no short can occur.

Oscillation on the higher frequencies in the Philco "Baby Grand," another midget, is caused by either a poor '24 detector, or the lack of alignment of the compensating condensers, located alongside the first and second stators of the tuning gang.

Radiolas

In the Radiola "41 A.C.," microphonic howl and a low audio howl may be caused by a defective or open by-pass condenser, located and connected across the secondary terminals of the first audio transformer. The remedy, of course, is replacement; and the proper RCA replacement unit should be used, if possible.

When Radiola "44 A.C." and "46 A.C." receivers have been returned for repair because of low plate voltages—or none—do not fail to look for a grounded coupling reactor in the detector plate circuit. This component is an audio choke located in a small brown housing beneath the tuning chassis, from which it is insulated only by a thin coating of pitch. Heat and other causes may loosen the coil, and allow it to short to the chassis. A remedy is to loosen the container and insert some insulating material between choke and chassis.

Some Service Men are replacing the '71A in the Radiola "60" and "62" models with a '45 amplifier. Although the writer does not recommend this change (since it often entails rebalancing the stages, to compensate the changes in plate and cathode voltages) it may be made by those who are desirous of obtaining the increased output. The green wires running from the chassis should be disconnected from their terminals on the power pack, and replaced on those to which the heavy blue leads run—one green to each blue. This will place the filament of the power tube in parallel with the remainder of the tubes in the set.

The biasing resistor unit of the receiver is located on one of the walls of the chassis beneath the tuner; it has four sections, of which the furthest from the volume control requires our attention. The '71A received 38 to 40 volts bias at 180 volts; but the '45 will require 30 to 34 at this plate voltage. To provide this, the 400-ohm sector of the resistor, mentioned above, must be shunted with another of the same value, reducing the effective resistance to 200 ohms. It will often be necessary to experiment with this value; an Electrad resistor of the adjustable-end type, with a maximum of 500 ohms, may be used conveniently. Adjustment of the R.F. compensator and, sometimes, the oscillator trimmer at the extreme right, will be needed.

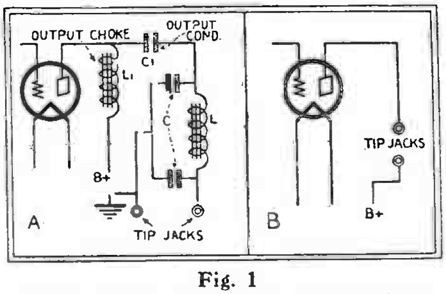

Fig. 1

A set with an output filter must have it cut out to use an external dynamic incorporating a transformer.

In these models and the "64," an open oscillator grid leak will sometimes cause unstable operation, and oscillation. The value is not critical; usually, about 40,000 or 50,000 ohms.

Stromberg-Carlson

With the Stromberg-Carlson "635 A.C.," the use of a dynamic speaker which is not of the best is apt to result in distortion and lack of volume. Usually, the A.C. dynamic reproducer incorporates an "output transformer" which matches the impedance of the voice coil. The receiver named, however, has a choke-and-condenser output device, of a familiar type. The combination, therefore, of the unit with the transformer built into the speaker caused a drop in volume which could be remedied only by rewiring the chassis of the receiver to place the primary of the speaker transformer directly in series with the plate of the power tube (Fig. 1).

At the rear of the chassis, two tip jacks are provided, for connection to a speaker; one is grounded to the chassis, from which the other is insulated. To rewire the output, it is necessary to insulate this last tip jack; unsolder, and tape well, the wire which leads to it. Then remove the jack; it cannot be used in the same hole, because there is not room for insulating washers, but between or near the two hum-balancers, there will be found a small, unused hole. Fasten the jack into this, properly insulated.

The next step is to remove the red wire from the "B+" terminal of the output choke, and the black wire from the "P" terminal of the same unit. Couple and solder these two leads, and tape the joint well. Unsolder the black wire from terminal

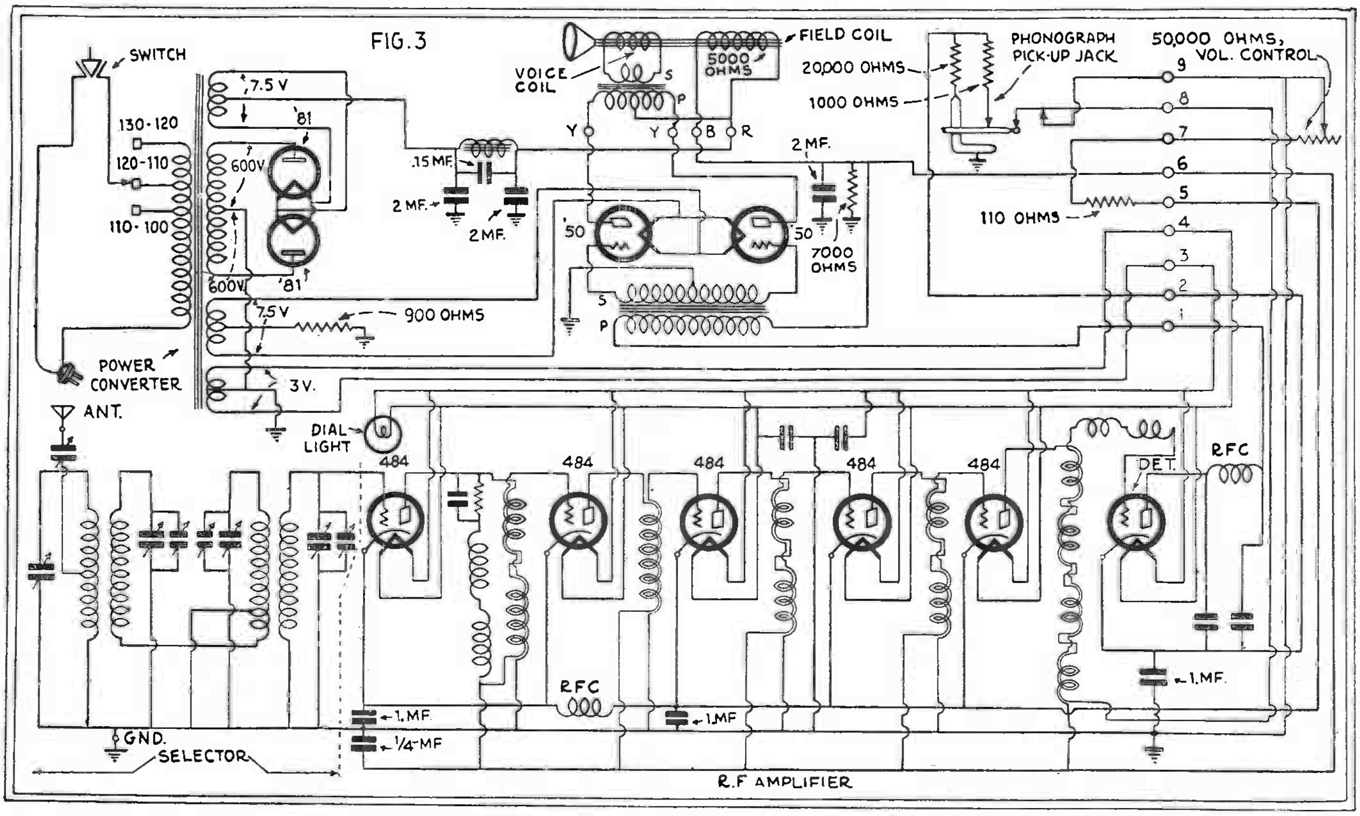

Fig. 3

The circuit of the Sparton "Model 301 Equasonne" A.C. set, with power pack and amplifier: Attention is called to the connections of the field coil; reversing which lowers '45 voltages and volume.

No. 1 on the audio filter unit, and tape it well. The black wire which runs to terminal 7 on the condenser block should then be unsoldered from this and connected to the red wire, which is removed from terminal No. 3 on the audio filter. Then a wire, soldered to the relocated tip jack, should be run to the plate of the audio tube. Often the slate-colored wire, soldered to the plate prong, has been disconnected and taped. These instructions, thus detailed, are given to obviate disturbing the cabled wiring of the receiver.

The Stromberg-Carlson "642 A.C." has an output transformer, built into the chassis, with terminals at the rear; one side of this unit is at ground potential. This chassis is often used in a console belonging to the customer, and with a dynamic speaker of another make. Since these speakers often have one side of the voice coil grounded to the frame, care must be taken that the speaker frame is not grounded to the chassis; or it may happen that the grounded side of the voice coil will be connected to the wrong side of the output transformer—thus shorting the coil.

In the "846" Stromberg-Carlson, trouble may be encountered with the visual tuning meter. If the indicator does not swing over far enough for accurate tuning, a check of the second and third screen-grid R.F. tubes will usually disclose the defect. At other times, the indicator will swing over to the left, without giving a reading; checking the cathode by-pass will show the trouble. The meter will seldom fail to read if the set is operating efficiently; but if the 390-ohm biasing resistor is open, the meter will not

In the new models ("10" and "11"), the same manufacturer employs a novel band-pass coupling arrangement, called the "Bi-Resonator." There are two of these; the aerial is coupled to the first '24 R.F. tube by one; the second R.F. tube to the third by another. Each coupler is tuned by two variable condensers. The diagram shows a condenser of small capacity coupling each pair of tuned circuits (Fig. 2). Lack of signals has been traced to these small condensers (which are nothing more than screws through the shields) shorting to the chassis. It is necessary to remove the shield from the condenser gang to determine this.

Other Makes

A short time ago, a Sparton "301 A.C." receiver gave much trouble, and many service calls were made to eliminate the distortion and rattle in the dynamic speaker. This unit was taken back to the shop, to replace the cone; and the Service Man who returned it could not complete his task satisfactorily. After the speaker was connected to the set, analysis of the latter showed low

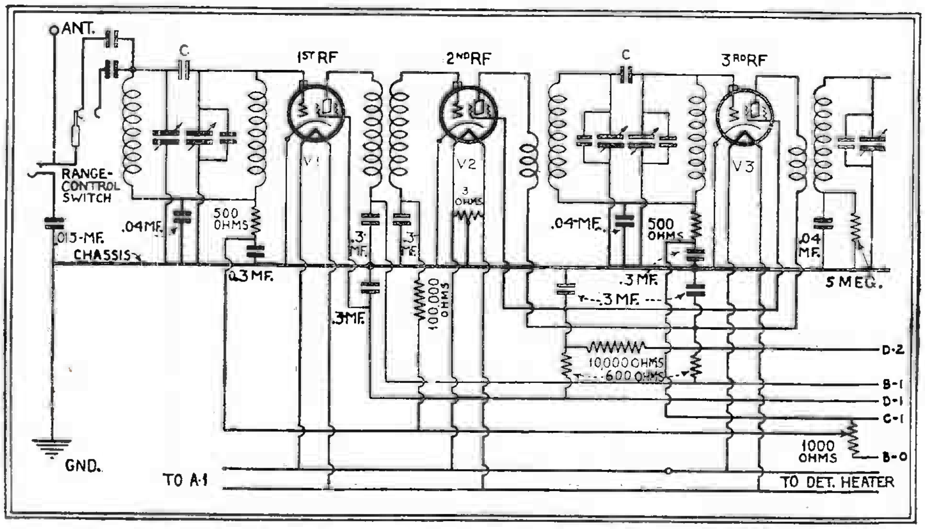

Fig. 2

The critical tuning capacities (C) of the "Bi-Resonators" or band-pass filters of the new Stromberg-Carlson models "10" and "11" regulate the amount of signal coupling. If these short to the shields, signals disappear.

plate voltages on the '50 push-pull amplifiers. New '50s and '81s were rushed to the spot and inserted; but to no avail. Finally, it was found that the field coil of the dynamic was wrongly connected to the set chassis. In this model, the output transformer is located in the reproducer unit; while the field coil is used as a choke in the power supply filter, and connected, through the other, to the center tap of the high-voltage secondary winding on the power transformer. If this coil is reversed, then the power stage tubes will receive only about 110 volts; and this mistake may be made if the paint on the terminals is scratched so that the colors are not discernable. (Fig. 3.)

In a Majestic "90 A.C.," fading puzzled a number of Service Men until, after changing tubes and making all possible tests, they examined the nuts fastening the receiver's cable plug to the power-pack terminals. Vibration caused the plug to shift, and caused the fading. In this and similar models, it is wise to tighten every nut in the pack, to avoid future calls and dissatisfaction to the owner.

In the Brunswick "31," trouble may be experienced with the combination 25,000-ohm volume control and switch, which cleaning and treating with Nujol will not remedy. It is best to replace this part with the newer type of volume control obtainable from the manufacturer.

In the Kolster "K20" models, thrown on the market in great numbers, difficulty is most frequently encountered with the "starting howl," which occurs when the line switch is turned on and the '27 detector starts to heat; this is due to the unequal rate of heating between the '27 detector and the '26 first audio. Inserting a quick-heating '27 shortens the duration of this annoyance, but does not eliminate it.

A remedy is to connect a small 100,000-ohm carbon resistor across the secondary of the first audio transformer; this will not materially reduce the volume of the set; but it will remove the starting howl, and, incidentally, lower the hum level considerably.

Earl, Kolster, Atwater-Kent, Majestic

RECENTLY, an Earl "Model 21" D.C. receiver was checked by a Service Man; the complaint being, no reception. Use of a set analyzer disclosed but one defect: namely, reversed plate reading on the first audio and R.F. stages; others received proper plate voltages. This fact alone vetoed the suggestion of a punctured filter condenser. However, when the set was taken apart, it was discovered that the condenser connected to the set side of the "B" choke was shorted. The condenser block in this model has colored wires emerging from the block. The condenser in question has a blue lead, which was clipped at the block; and a replacement unit of 2 mf. capacity was inserted (Fig. 1). The return or common lead is colored black.

While neutralizing this model, some Service Men make a practice of utilizing a Stevens No. 4 "Spintite." This procedure will work, although allowance must be made for the capacity of this metal tool. However, care should be taken not to short the wrench against the metal chassis; as this may blow one of the '01A tubes. Incidentally, the '71A tubes are in a separate filament circuit, and removal of an '01A will not cut off or break the series circuit of the power tubes.

Many Kolster "K20" sets on the market today are slightly different from their predecessors. As many know, this model employs grid condensers shunted across the grid suppressors. On the later model, a small aperture will be noticed at the left of the first R.F. tube socket (facing rear of set). This opening is to allow insertion of a nonmetallic screwdriver to adjust a variable condenser, which is connected across the grid suppressor, instead of the former fixed condenser. Adjustment of this condenser is not critical, but the DX ability of the set depends upon the correct setting. The condenser should be varied, for maximum response at 650 meters, by means of a local oscillator or some powerful broadcaster at a frequency or wave near this figure.

Atwater Kent has made it a simple task to line up the condenser gang in the new "Model 70" series A.C. and D.C. receivers. While heretofore, it was necessary to release the rotors of the condensers to line up the gang, it is now sufficient to adjust the screws of the compensating condensers to accomplish the same job. These screws are located at the top of each section in the bathtub gang. The proper screw can be identified by the sealing wax over it.

It seems that manufacturers are now taking into consideration the fact that their sets must eventually be serviced. The Brunswick No. 22 A.C. "Unicontrol" shows this. Removal of the bottom plate reveals all circuits and connections. However, unless the Service Man knows how, locating the line fuses is another matter. The shield can of the power transformer must be loosened, by the removal of the four screws holding it; and the fuses will be found cleverly concealed behind some insulating paper. There are two cartridge-type fuses, one in either side of the line.

Intermittent reproduction in Majestic combination receivers was cured, in nine instances out of ten, by replacing the "phono" input transformer. The Majestic "100B" incorporates this unit in the receiver chassis.

However, replacement has since been found unnecessary. The phono-pickup feeds into an input transformer which couples the pickup to the detector grid circuit by means of the peculiar throw-over switch. One side, of both primary and secondary windings of this transformer, is grounded already. In an effort to determine the cause of grounding, of the other side of the secondary winding, one of these units was taken apart. The metal housing of the transformer folds over at the bottom and holds the cardboard terminal strip. Leads from the transformer come through small holes in the cardboard and are soldered to lugs; which are fastened to the cardboard by means of two flanges which pass through and are bent over to hold the lugs in place. Too many times has the Service Man found that one of these flanges had not been bent over, and was shorting to the core of the transformer. This has been remedied, by either bending over the flange or clipping it. Some dispense entirely with the lugs, by lengthening the transformer leads and bringing these up through the holes in the cardboard. The latter should be replaced,

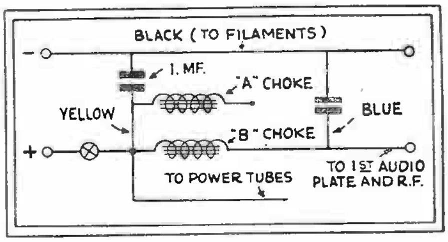

Fig. 1

The shorting of the condenser at the right, in a "Model 21" D.C. Earl filter block, reversed plate voltage polarities. External replacement is easy.

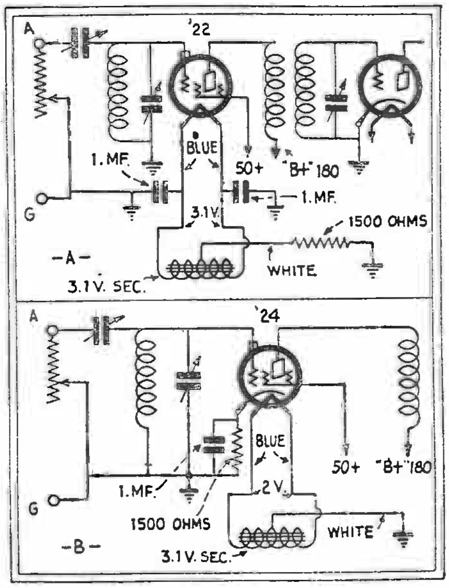

Fig. 2

On replacing a '22 by a '24 in the Freshman "Q-16" and similar models increased drain of filament current will cut down the voltage to the proper value.

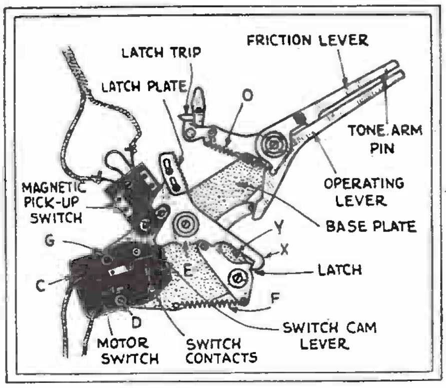

Fig. 3

Details of the automatic switch controlling the phonograph motor in Radiola and Victor combinations. It is discussed in the text on page 554 and necessary adjustments described.

and the ends of the can should be bent over into place.

Early Screen-Grid Models

It seems that the only way to remedy the complaints of hum on resonance and short-lived '22 screen-grid tubes, is to rewire the Freshman "Q-16" set to use an A.C. '24 tube. The first step, of course, is to tear out the UX socket and replace it with a UY type; the procedure will vary with the type of socket employed. The same filament leads may be used, though this is a 3.1 volt winding (the '22 screen-grid tube is rated at 3.3 volts at .132-ampere), for the '24 will get approximately 2 volts in most instances (See Fig. 2). In cases where the filament voltage under load is lower than 2 volts, the '24 filament may be placed in parallel with the '27 tube. This will deliver about 1.9 volts in most cases to the '24.

Of the two, the first method is best; as this will not cause delay of several minutes in starting because of the lower filament or heater voltage.

In this set, bias is obtained by means of a resistor of 1500 ohms value, connected from the center tap of the '22 winding to negative or chassis. This resistor should be used to obtain bias for the '24 by connecting it from cathode to chassis; the center tap is then connected to chassis. If the '27 filament winding is used for heater voltage, the center tap of the winding already is connected to negative. The '22 filament leads from the power transformer are colored blue, the center tap white.

When the voltages are too low, it is not detrimental to place the fuse in the 110-volt position; for, even though the line-voltage is 125, the filament voltages on the tubes will be only normal. If the '27 filament winding is used for the '24 also, the blue filament leads intended for the '22 should be well taped and isolated from one another. The plate and screen-grid voltage leads are connected in the usual manner without any change. The increased sensitivity and almost humless reception resulting from this rewiring will pay for the time and trouble spent.

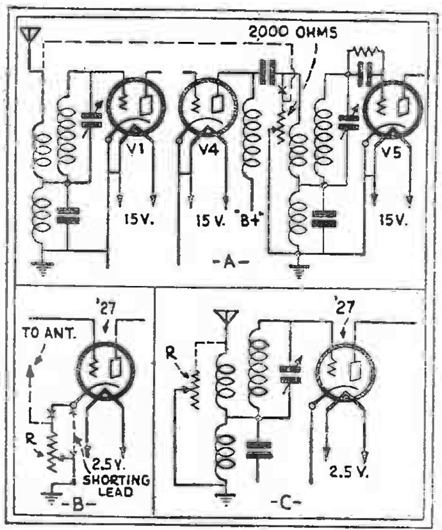

Fig. 4

Above, volume control in 15-volt Sonora "A44" models, which may be connected across aerial; B and C, 2½-volt models before and after change.

Replacements and Changes

Noisy and unstable operation in the Colonial "32AC" receiver has often been traced to a defective carbon resistor (orange-colored) connected from one terminal of the Mershon condenser to the audio transformer. The only remedy is replacement; when this is done, it is good policy to tighten terminal nuts and resolder the connections on the Mershon condenser. On this same set, when it is necessary to switch the phono-radio switch to "phono" on radio reception in order to obtain more volume and clear reproduction, it is a sign of an open detector-cathode biasing resistor.

The new Zenith "10A.C." makes use of a three-point switch for proper antenna setting. On the first lot shipped out, an inferior component is the cause of intermittent and noisy reception. A new type of switch is now being used; and it is advisable to make the change to prevent possible future service calls.

On the Zenith "42 A.C." an ordinary toggle switch is used for an antenna switch, shorting or placing into the aerial circuit a condenser of approximately .00025-mf. capacity. This switch is often the cause of noisy and fading reception, when it becomes defective with use. Remedy is replacement. The defect can easily be found by moving the switch arm slightly, without throwing it over.

Very often, it becomes necessary to remove the Radiola "30A" chassis from its cabinet. When this is done, all cables and connections must be disconnected from the tuner chassis. Many Service Men, when placing the chassis back into the cabinet, do not hook up the antenna coupler properly. This coil has three secondary leads which connect to the terminal strip on the catacomb. The black lead connects to No. 9 terminal (counting from right to left, as you face the rear of the set). The two black and green leads are connected to Nos. 6 and 7, respectively; these two may be interchanged. Lack of sensitivity and off-scale tuning will result from a mistake in replacing the coupler wires.

Complaints of fading on this model always gave a great deal of trouble, until all joints and connections were re-soldered and heated. Most frequently, however, the trouble can be traced directly to the multi-tapped voltage divider in the pack. Reheating and sweating all soldered connections to this resistor will clear up the trouble. Symptoms of this defect are fluctuating voltages.

The automatic phonograph motor switch on Radiola and Victor combinations are often the cause of much labor and wasteful effort. Usually, the trouble lies in either premature tripping or failure of the switch to function. Referring to the illustration (Fig. 3) it can be seen that the surfaces at "X" must be squared; or we will have premature tripping. With use, these surfaces become rounded, or the latch spring loses its tension; all of which will cause this trouble. A small file diligently used, and increasing the tension of spring "F," will be the remedy. When the switch does not function, it is best to determine whether the contact springs within the switch have not lost their tension or that the contacts are corroded. The switch should be adjusted so that there is at least 1/16-inch clearance between the switch-cam lever and the latch-plate cam (this clearance point is denoted by "E"). This is done by loosening the screws "D" and "G," so that the switch mechanism can be adjusted. The screws should then be tightened. Failure of the switch to trip is caused usually by weakening of the latch-plate spring "O." If the teeth on the latch plate become worn, the same trouble may result. A file that is sharp, and small enough to re-construct the teeth, will clear up this difficulty. (See Fig. 3).

Sonora made two "A44" models; the first employed 15-volt Arcturus tubes and the second, which was a converted job, '27 tubes in all R.F. stages. The former set used a volume control of about 2000 ohms, connected from negative chassis to plate circuit of the fourth R.F. stage (Fig. 4A). However, in the converted job, the volume control was used to control cathode bias on the R.F. amplifiers, (Fig. 4B). This method, though a good one, was not effective in this set because of the value of the control used. Control of volume was not gradual and only about one-tenth the entire unit had any use.

Without disturbing the circuit, the cathode connection was removed and shorted to chassis; so that another method to control volume could be employed. After several experiments, it was determined that the variable resistance placed across the aerial and ground would give as good and smooth a control of volume as could be desired (Fig. 4C). Only one lead is necessary to make this change. One side of the control resistor is connected to the aerial lead. The frame of the control is fastened to the chassis by means of a nut thereby obviating any other connection to ground.

In the new Bosch sets the line, "local-distance" switches are not an integral part of the receiver chassis. They are controlled by a single knob on the tuning panel. The local-distance switch is connected to the set by three wires going to the three binding posts on the side of the chassis; the top being the aerial and the bottom, the ground. Lack of sensitivity can be traced to the omission of connecting the wire belonging on the center binding post.

The first R.F. tube in the Kennedy screen-grid receiver will often need replacement; for, as soon as this tube becomes weak, the selectivity of the receiver is impaired. Some tubes, even though testing perfect, were unsatisfactory for some unexplainable reason. Experiment and trial will quickly determine the proper tube to use for this stage.

Lack of sensitivity, in the Fada "42" series A.C. chassis, is a common complaint and may be caused by any of a number of defects; but one that has often been found is in the 50,000-ohm blue carbon resistor in the plate circuit of the detector stage. Usually, a drop in normal plate voltage will accompany this defect. If a resistor of 25,000-ohm value is used for replacement, there will be a slight increase in selectivity.

A RECENT case of noisy reception on a Stromberg-Carlson "54" receiver proved puzzling for a time. The interference was definitely proven to be due solely to some internal defect. The aerial was disconnected, then the ground; the first R.F. screen-grid tube was removed, followed by the second and third. However, the clicking and sputtering remained. When the '27 detector was extracted, the noise ceased; a new tube, known to be perfect, was inserted but with the same result. Noisy bypass condensers were then suspected but discharge and substitution tests did not disclose the defect. The resistors were then examined, and it was found that the double voltage divider was blistering. Rocking the divider revealed the source of the trouble. The resistor sparked in operation, and caused the sizzling and frying sounds.

On another occasion, the same complaint was encountered. The voltage divider was very wisely removed, but the condition persisted after a new one was soldered into place. A thorough test and examination this time showed a noisy bypass condenser in the detector filter; which is composed of an R.F. choke bypassed by two very low-capacity (.0005-mf.) fixed condensers (Fig. 1). This showed up when this unit was shorted out while the set was in operation.

A similar condition of interval noise and fading was encountered on a Freshman "Q16" receiver. At the slightest vibration and for no cause (seemingly) whatsoever, the set would die out or become very noisy. A check of the entire receiver and tubes showed up nothing; so the set was disassembled piece-meal to determine the cause. All socket prongs were carefully cleaned with a strip of emery cloth and bent into proper position; every soldered joint and connection was sweated and resoldered. The resistors were tested by pulling on them and by kneading the flexible wire-wound resistor, which made and broke circuit. A new one was soldered into place. (It happened to be the '22 biasing resistor. On another occasion, the fault has been due to others.) After mounting the receiver into position, the complaint was eliminated. What was really the exact cause of the trouble is hard to say; but duplicating this procedure is practically sure to clear up fading and noisy reception on the "Q16."

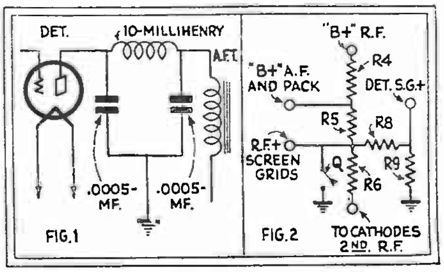

Left, Stromberg-Carlson "654" detector output. Right, Colonial "33AC" voltage-divider connections: R4, 11,000 ohms; R5, 60,000; R6, 50,000; R8, R9, 750,000 each; Q, "quiet button."

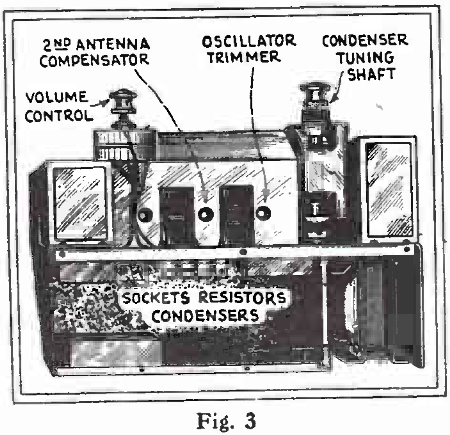

Fig. 3

Bottom of Majestic "50" chassis, showing two compensating condensers (C5, right, and C9, left). Adjustments are best made with a good oscillator.

Correct Placing of Receiver

A novel experience with a Victor "45," a short time ago, enabled one service company to "kill" a great number of complaints that had been hanging fire for a long time. This set had a loud hum and, in the reproduction of voice (especially bass tones) an echo was heard. Packs and tubes were changed to remove the hum, and this was soon reduced to a minimum; it could not be entirely eliminated, as this model has a low hum level. However, the echo furnished another problem. Interchanging dynamic reproducers did not clear up the difficulty. The acoustics of the room was then taken into consideration. A large tapestry was hung on the wall opposite the set to offset any sympathetic vibration; the windows in the room were then made secure to prevent any vibration of the panes, panels or sashes—but to no avail. The next move was to move the receiver into another room to determine whether the shape of the living room was at fault, but the same effect was observed. While the Service Man was shifting the receiver, he noticed that the echo and remaining hum disappeared as he swung the cabinet away from the wall. This furnished the missing link, so to speak. The set was then taken back into the living room and installed cater-corner. Since then, similar complaints have been taken care of in short order and now all sets, when installed, are placed either cater-corner or about a foot from the wall.

To remove the new Colonial Midget "Model 36" from its cabinet for repairs, it is necessary first to remove the dynamic reproducer; or the tuning dial will be bent out of shape. This dial is fitted into a rounded groove cut for it, and part of the speaker housing overlaps the dial. In replacing the chassis, the speaker must be worked in along with the chassis, for the consolette cabinet is very small.

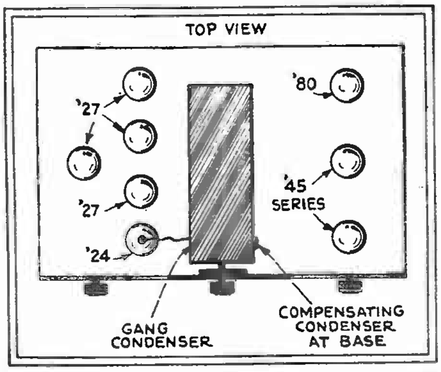

Fig. 5

Position of trimmer on Emerson chassis.

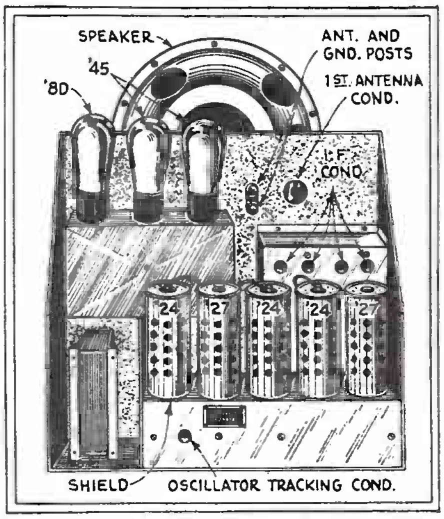

Fig. 4

Behind the Majestic "50" chassis. From left to right: 1st R.F., oscillator (a De Forest 427); 1st detector; I.F.; 2nd detector.

A Colonial "33AC" receiver recently gave several Service Men something to talk about. The complaint was low volume; the set was aligned, tubes changed and the aerial checked, but only two powerful broadcasters could be heard. On a test for voltages, it was found that there was none on the screen-grids. This, however, was blamed on the meter; for no set they had ever run across worked without screen voltage. Examination finally revealed an open section (middle) of the three-section voltage divider located under the sub-panel of the chassis near the two R.F. screen-grid sockets (Fig. 2). This section has 60,000 ohms resistance; but replacement was made with an Electrad "Type B" of 25,000 ohms, resulting in a corresponding increase in volume and selectivity.

Majestic Superheterodynes

Since the advent of supers on the commercial market, perhaps the easiest of all to balance and align is the Majestic "50" series. A good many of these sets are on the market and many have been sold. Since service material on this model appeared late, and no information could be had concerning the many balancing and adjusting screws, many Service Men mistook I.F. adjustments for tuning-gang verniers, and oscillator trimmers for antenna tuners, etc. This set has only one I.F. stage and, consequently, is simpler to adjust than many other supers. The very best work is done with oscillators and output meter; but a good job may be done without the use of these service tools. The first step is the adjustment of the antenna and oscillator circuits. These nuts are located as follows: the oscillator tracking condenser is beneath the first screen-grid tube, and can be reached through the small aperture. The antenna compensator is situated at the right of the antenna and ground binding posts. Under the chassis, there are two adjusting nuts; the one nearest the drum-dial cable is the oscillator trimmer; the other is the second antenna adjustment (Fig. 3). The tracking condenser should be adjusted for maximum response at about 600 kc. The oscillator trimmer should be turned for maximum response at a frequency of 1500 kc. while the dial is set on that marking. It is necessary to use a station of that frequency and, if it does not come in at that marking on the scale, the scale must be moved to the correct position. Try the scale at a station of about 700 kc. to ascertain whether it is correct. The first antenna knob should be aligned for maximum response at about 1200 to 1000 kc. It is advisable to repeat this procedure, to insure perfect adjustment. If the I.F. adjustments have not been tampered with, it is best to leave them. However should it become necessary, continue in this manner. There are four adjustment nuts; these tune and are located in the rear right of the chassis from left to right (Fig. 4): first detector plate, I.F. grid, I.F. plate, second detector grid; and should be adjusted at 175 kc. in that order. If an oscillator is not available, choose a powerful broadcaster, whose signal is constant, and adjust the four nuts in the order given for maximum response. When the I.F. adjustments are made, it is best to adjust the oscillator and antenna circuit. The second antenna adjustment is made at 1200 kc. with the volume control turned down; so that a difference can be noted.

The Emerson set now on the market uses one screen-grid stage, but the '45 amplifier filaments are in series. Opposite the second '45 tube is a condenser compensator, which trims the detector gang condenser. It usually makes a great difference when this is adjusted. (Fig. 5).

Lack of sensitivity and a hum is sometimes caused by an open variometer in the Bosch "28" and "29 AC" models. This unit has a coiled spring, which is used for connection to one side of the rotor. If the spring loosens and breaks from the terminal, it need only be resoldered.

The Brunswick "15" and "22 AC" ("unicontrol") chasses use a condenser-type volume control ; if this component becomes noisy after a short time in operation, it cannot be cleaned like a wire-wound resistor or carbon-type control. With the chassis bottom side up and the bottom plate off, rotate the volume control. You will notice a wide, grey-covered lead moving with the action; it is soldered to one of the stators of the variable gang. Pull lightly on this lead, first in one direction, then the other. This procedure has cleared up every case of noisy control where it has been tried, and gives no further trouble.

The "LLB" type Symington dynamic speaker used in the Zenith "10, 11, 12" (new series) is not adjusted in the usual manner. It has no spider, and the voice coil is not adjusted by loosening the mounting nuts. The large bolt in the rear must be loosened. The stand should be removed out of the way; this will permit the field pot to be pulled out. The center armature bar should be turned and pulled out. Here three screws will be noticed; these should be loosened to enable the Service Man to center the voice coil. This can be done, in the usual manner, by inserting strips between the frame and the voice coil. The bar should be replaced, and the pot put back by tightening the bolt provided for the purpose.

Eliminating A. C. Hum

HUM, to an annoying extent, in the Bosch "48 A.C." chassis, may be due to one of the usual causes of such a complaint—bad tubes, an open section in a center-tapped resistor, or unmatched audio secondaries—but it has been sometimes found that the chassis has an inherent hum. At what time this condition developed does not matter; but it may be remedied by the addition of a 2-mf. filter condenser, with a working rating above 300 volts, connected from one side of the speaker field's outlet to the chassis (Fig. 1). Trial will show from which side this bypass is most effective. This chassis is used in several models; the "16," "17," "18," "Jr.", etc.

Many Service Men forget the existence of the antenna aligning condenser which is located directly above the antenna and ground binding posts in the Bosch "58" and "60" series; this has a black knob for manual adjustments. Lack of sensitivity and, often, cross talk, are caused by an incorrect setting of this condenser; it should be adjusted when the receiver is tuned to 1,000 kilocycles.

Transformer Hum

An elusive hum, in the Kolster "K43," may be caused by any of a number of defects; it must be determined whether it is due to the "B" supply, a faulty component, or is purely of a mechanical nature. Most frequently, its cause will be found in the vibration of a power transformer shield; placing the hand firmly on this shield will show whether the hum is due to it. If so, and no objection is made, the shield may be discarded; it is removed by straightening the lugs which hold it and pulling it out. Otherwise, the space between the transformer and the shield may be packed firmly with soft paper and the shield fitted back in position. The air space, which formerly amplified the hum from the transformer, is now occupied by the stuffing, and the vibration is greatly dampened.

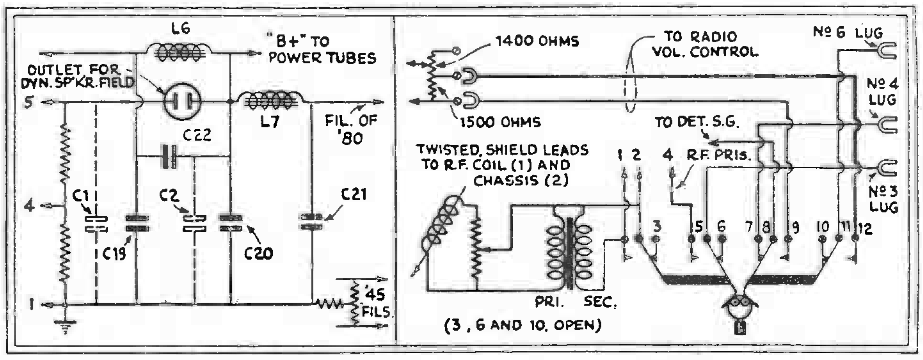

Fig. 1 Fig. 2

Left, Bosch "48 A.C." filter; right, transfer-switch and cable connections of the Radiola "47."

Electrical hum, in this model, may be caused by too much resistance in the hum control across the $2\frac{1}{2}$-volt circuit of the heater-type tubes. This component may be removed, and one of about 15 ohms value substituted, to obtain more accurate and finer adjustment. Care should be taken to fasten this unit firmly to the chassis. An unbalanced condition of the secondary winding of the push-pull input transformer will result in hum which can be remedied only by replacement. All terminals of the power pack must be securely fastened down.

A cause of oscillation, in the Bosch "48," and certain Eveready models, is improper position of the variometer rotor, which should work with the condenser gang to provide equal sensitivity and stability over the whole tuning scale. When the latter is at 0, the rotor of the variometer should be at right angles to the stator. To align the rotor, loosen the two nuts which hold the variometer to the chassis, and adjust it. When replacing it in position, be certain that both sets of the insulating washers are in position between the frame of the variometer and the chassis. During the operation, and before the unit is fastened in place, it will not be amiss to bend the contact spring on the rotor to give better contact; for imperfect contact here may be a cause of much distress. Remove the gang shield, and bend the spring so that the tension on the shaft is increased.

Phono-Radio Switches

Much time was wasted recently on a Radiola "47," and an account of the reason may save another Service Man a similar experience. This set operated correctly on the phono. side, but spasmodically on the radio side; which led to the conclusion that the trouble was in the R.F. end. Testing the parts and circuits showed a lack of screen-grid voltage on the R.F. amplifiers. The cable is hard to trace, because red and green wires lead to different components. (See Fig. 2). Finally, however, the defect was found in a badly-corroded transfer-switch prong, which made, apparently, good contact with the other terminal. The switch was carefully cleaned of the corrosion, which had acted as an insulation, and the prongs were bent to increase their tension.

A complaint, on the other hand, of spasmodic record reproduction on a Philco combination, was traced to poor contacts on the transfer switch. Care must be taken, however, not to bend the blades too far; or the elasticity and tension may be lost in this component.

A loud hum in the Radiola "67," which was not caused by any defect in the "B" supply, or any other component, was cured by placing wads of felt on the speaker cone, to prevent undue response to the 60-cycle note. This did not interfere with reproduction, and the customer was satisfied. On this model, when the local-distance switch is placed on the "local" side, the aerial is disconnected. In some localities, even with a sensitive super, reception is poor without an aerial; and the receiver will in some cases oscillate violently. In this set, the power pack is somewhat different from the usual arrangement; a filter choke is used in each side of the line, in addition to the speaker field, which is in the negative line.

An open 250,000-ohm leak resistor, between the secondary of the last audio transformer and "B—" in the Radiola "66" super, has been found the cause of irregular reproduction; its position is indicated by R in Fig. 3.

In the Victor "RE-45" phono combination model, a hum which is exceedingly difficult to contend with may be encountered. The fact that '26-type tubes are used may furnish the average Service Man with an alibi; however, the hum due to these tubes should be hardly noticeable, and may be considered negligible. The first step is to be sure that every tube is perfect; the '45s or the '27. if of low emission or gassy, will cause a loud hum. The hum balancer should be regulated in the usual manner. Some receivers of this model were released without the bypass condenser connected across the first filter choke, which appears in the later product; if this is lacking, it should be supplied (Fig. 4). A capacity of one-half to one microfarad will do. If the hum still persists, examine the phono-radio switch; the two screws holding the fiber washers and the contact springs together may have loosened under vibration. If so, tighten these screws firmly.

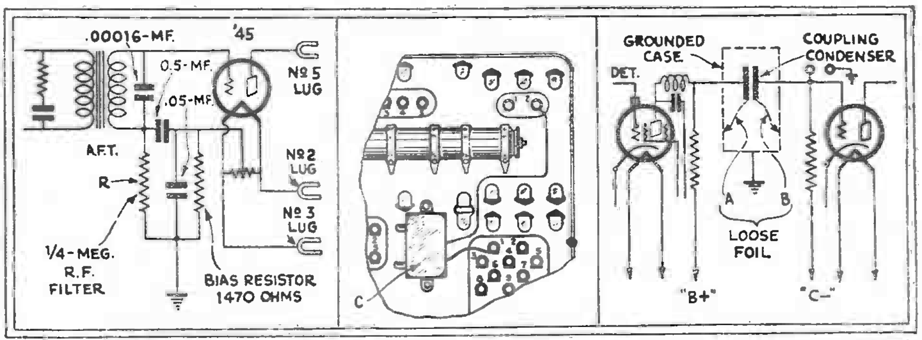

Fig. 3 Fig. 4 Fig. 5

Left, output of the Radiola "66": center, an addition to early numbers of the Victor "RE-45" to reduce hum; right, a sensitive point in resistance-capacity coupling, as in the new Zenith "10," "11" and "12" (the latter not the old models similarly numbered.)

Intermittent reception, in Zenith "Models 10, 11 and 12," was formerly very perplexing to some Service Men. One set would work well for some hours and then, seemingly without cause, it would start and stop spasmodically. As soon as it was touched, reception became normal again. For this reason, it seemed impossible to locate the trouble. Every component tested correct; tubes were changed to no avail, condenser plates were checked for alignment, and all bypass condensers were tested for leaks. Bouncing and striking the set would not cause the trouble to reappear; and the trouble continued to be mysterious. Then the chassis was placed on the floor and all wires were pulled, in an effort to locate the loose contact. At last, when a hold was taken on the set to turn it to another position, a Service Man unintentionally laid hold of the blocking condenser of the resistance-coupled stage; and the set began to act spasmodically again.

This condenser is riveted to the chassis; when it was removed, it was found that part of the foil was not completely covered with pitch, and vibration of the chassis would short the condenser. On some sets, while this took place, the reception was only impaired by the shorting of the grid side of the condenser. With the plate side shorted, reception was entirely cut out. The remedy is replacement with an 0.1-mf. condenser, or taping and insulating the original component so that a short cannot occur again. (See Fig. 5).

Finding Defective Parts

USUALLY, it is possible to find the cause of the trouble in a receiver by considering the effects; for instance, choky reproduction is caused by a lack of proper "C" bias. However, it often happens that, even after the cause has been determined, we are at a loss to find the position of the defect.

Recently, a complaint of very low volume and incoherent reproduction in a Brunswick "Model 22 AC" caused that very difficulty. After a thorough test of both receiver and tubes, it was found that the parallel '45 output tubes received only about 100 volts on the plate; while all other set voltages were correspondingly lower. Unless the Service Man is familiar with this set, it is exceedingly difficult to trace the leads from the power transformer and condenser block without the aid of a code color chart, or a pictorial diagram showing the colors of the leads. Leads emerge from both these units without the semblance of a color scheme. Since a partially-shorted or leaky condenser was suspected, some time was spent in disconnecting leads from the condenser block and a "short" reading was found between the two green leads. With these leads disconnected, proper voltages on all tubes were obtained, but no reception.

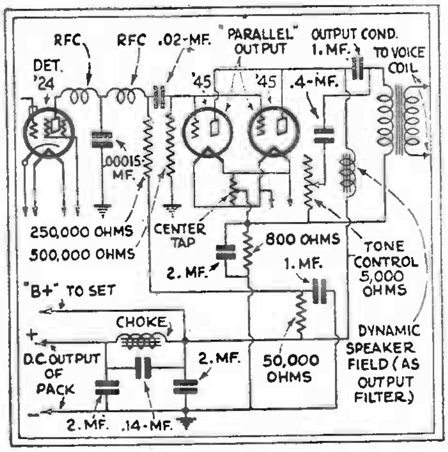

Fig. 1

Parallel power stage of the Brunswick "22," and filter connections. The 1-mf. coupling condenser carries the output to the speaker.

The obvious indication being that these leads were connected to a single coupling condenser, a 2-mf. component, with a working-voltage rating of 400, was connected into their place and soldered; and the set was again in operating condition. After the green leads had been taped and placed out of harm's way, the job was done. At the first opportunity, the schematic circuit of this model was examined; and it was seen that the capacity in question was the 1-mf. output condenser between the plates of the power tubes and one side of the out-

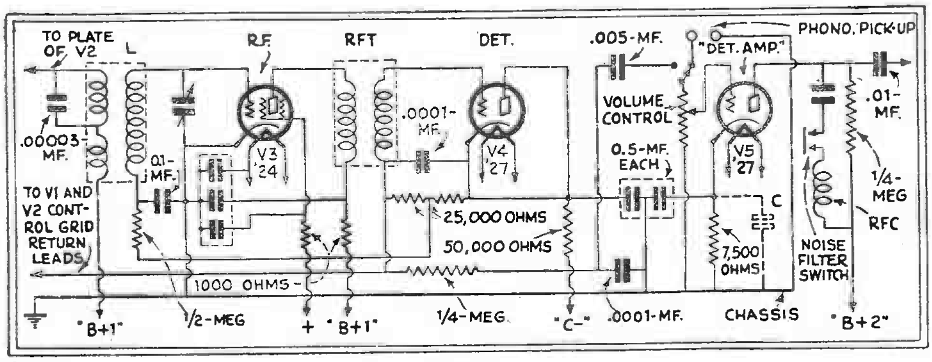

Fig. 2

The two-element detector and automatic volume control of the Fada "46 A.C." The detector-amplifier is a sensitive first-audio stage. Adding condenser C overcame a tendency to hum.

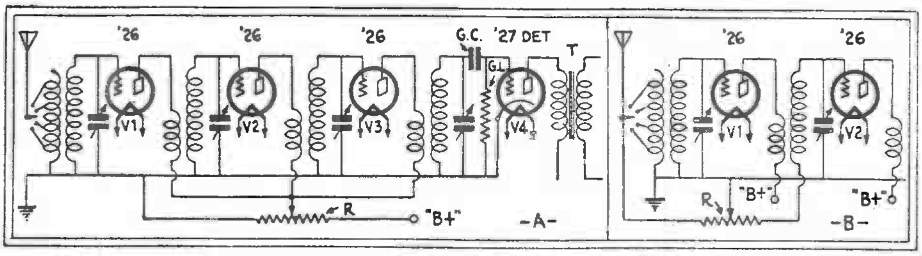

Fig. 3

The Zenith "11E," an early A.C. set, used a rheostat in the 1.5-volt. It may be modernized, as at A, with a potentiometer controlling plate voltage; or as at B, by controlling grid bias, as well as shunting the antenna coupler.

put transformer's primary (Fig. 1). Perhaps ten sets since then have been repaired in like manner.

An annoying, and yet interesting, job of servicing was encountered with a Fada "46 AC" receiver. The complaint was hum of a kind usually caused by a poor heater in one of the '27 audio amplifiers; this set has three such, and unless they are perfect, with good insulation between filaments and cathodes, a loud hum will be encountered. However, no matter how good the tubes in a circuit, one may develop a defect in a short time and cause a similar complaint—and another service call.

With this fact in mind, it was sought to devise some method of reducing the hum level and preventing its increase by a weakening '27. Condensers of high capacity were added to the filter circuit, and resistors were bypassed with little effect.

Finally, a 2-mf. non-inductive condenser, with a working rating of 300 volts, was connected from cathode of the second '27 ("detector amplifier") to ground on the chassis (Fig. 2). This procedure has turned the trick in every case where it has been tried and cuts down to practically nil any hum in this series of receivers (Models "41, 42, 44, 46, 47").

In cities where large hotels and apartment houses are common, difficulties arise frequently because provision of some external antenna has been neglected or even forbidden. An inside antenna is of little value, because of the shielding effect of the steel framework. Such a problem was recently encountered in one of Brooklyn's large hotels during the installation of a Philco D.C. "Baby Grand." In this locality, the noise pickup is great, and especially in a hotel with its countless elevators and motors. Without the use of some external wire, the noise-signal ratio makes for poor reception with a set of this type. Aerials of different types were tried: the metal framework of the windows, for instance, which worked to a certain degree of satisfaction on two stations. The light-line was then tried, with a socket-type condenser; but the line noise, added to the interference picked up within the building, was impossibly high. Use of the ground as an aerial gave the least amount of noise, but also insufficient signal. With nothing else left to do, and with little hope of success, a wire was run from the antenna post to the bell-box of the house telephone. Signal pickup was increased three or four times, without proportionate increase in noise. However, in the past, when this had been done in other buildings, the noise was found very disconcerting.

How many service calls have been made because of a shorted aerial, or even several aerials, lying across your customer's? To eliminate countless unnecessary calls, the manager of one of the largest service departments in the country has adopted the policy of supplying 150-foot rolls of rubber-insulated No. 16 wire: the bare No. 14 being omitted entirely from the installation kit. The aerial is thus erected in a single piece whch serves also as lead-in and runs to the post on the set. No lead-in strip is employed, thus eliminating the possibility of corroded clips and high-resistance contacts. Slots are made in the window frames and sills, to introduce the wire and prevent the possibility of its being cut by closing the window down upon it. Its adoption will be worthwhile by those dealers and Service Men who wish to obviate at least two service calls on the average (as records show) during the period of free service.

A complaint of intermittent reception readily suggests a loose wire, a corroded or improperly soldered joint, or a break in some winding which is subject to vibration. However, after several complaints of intermittent reception of a Zenith "11E-AC" set, which had been thoroughly checked without finding such a condition, it was rigged up on one corner of the work bench for a "life" test; so that, whenever it stopped, an examination could be made to determine the location. But, as soon as the set was turned over or even touched, it started in to operate again as smoothly as could be desired. During a period of several days, it stopped perhaps a dozen times; during the period of examination, two more sets of the same model were brought in for service with the same complaint.

Visual inspection failed to show any defects; neither electrical nor mechanical tests helped to clear up the trouble. Finally, after the audio side had been pronounced perfect, an analyzer (with plate and grid buttons pressed) was plugged into the first R. F. socket. When the set next stopped, both readings were perfect. The second R. F. stage was then tested in the same manner and, when the set became inoperative, no reading was shown on the grid voltmeter. A similar test showed the third R. F. stage O. K. In this manner, the defect was finally traced to the second R. F. grid circuit and found in a shorting compensating condenser. Similar trouble was found on the other two sets; but in the *third* R. F. compensator in one of them.

These compensating condensers are two-plate units, located in front of each variable condenser (except the first) and adjusted with a set-screw which moves the front plate closer to or away from the other. No mica or insulating material is used, to prevent the possibility of a short. However, to prevent the occurrence of any such trouble in future, small squares of gummed paper, a little larger than the rear plate, were pasted over it.

This receiver model uses a rheostat, in series with the filaments of the '26-type amplifiers, as a volume control; and it is no simple task to adjust this to the desired volume and control oscillation at the same time, because of the "thermal inertia" of the '26-type filaments. The "11E" is an oscillating set and lack of this tendency is a sure sign of some defect or needed adjustment.

There are several means of overcoming this difficulty. The first (Fig. 3A) is to use R. F. plate voltage control. Remove the rheostat (solder together and tape well the two wires which connected it into the filament circuit) and replace it on the panel by a 50,000-ohm potentiometer, the shaft of which is carefully insulated from the chassis with washers. The "B+" plate lead, running to the R. F. by-pass condenser from the R. F. transformer primaries, is then cut and connected to the arm of the potentiometer: one side of the latter is then connected to the lead from the condenser, and the other to ground. (The choice of sides will depend on the direction in which it is desired that the control should operate). This system gives good control over oscillation and reduces volume; but there is a slight tendency toward mushiness at low-volume adjustments.

To overcome this latter condition, yet another hookup was tried (Fig. 3B); here the shaft of the resistor need not be insulated from the chassis. The grid return from the second R. F. tube is disconnected from the chassis, and connected to the other side of the potentiometer, the other side of which goes to the antenna post. Though the result may be a slight loss in selectivity, the even control of volume and of oscillation will more than repay the trouble of making the change. For the plate-voltage control, a good wire-wound resistor is used to best advantage; for the antenna-grid system, the writer used a Centralab carbon-type component.

Low, mushy reception was finally traced to a partially shorted 0.1-mf. condenser in the resistance-capacity coupled stage of a Philco "77"; in this set, reception will be obtained even with this condenser open, though not

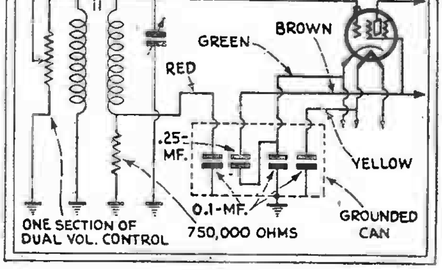

Fig. 4

The input of the Colonial "32 A.C." in which opening the first bypass condenser increases the R.F. resistance and causes fading.

very strongly.

It is best to use some form of indicating output meter to line up a Philco "96" receiver, because of the automatic volume control. With most receivers, when aligning the condensers by ear, it is common practice to turn down the volume control; but in this series, the volume control should be turned all the way up. If an output milliammeter is used, the voice coil may be disconnected with some trouble; but, if an A. C. voltmeter of low range (0-3-scale will do nicely) is used, this will not be necessary.

Recently the writer received a complaint of indistinct reproduction on low volume, though good quality on loud signals, in a Philco "76." The volume control was suspected at once, from previous experience, but worked and tested O.K.; so did the tubes. The chassis was replaced in the console, with the speaker outside. On applying the antenna wire to the control-grid cap of the third R. F. screen-grid tube (to produce a hum) it was found that the voice coil was slightly off center. The dynamic used in this set cannot be adjusted visually, or by inserting small strips between voice coil and pole piece. The center adjusting screw should be loosened, and the voice coil shifted into its proper position.

In the Colonial "32 AC," a cause of fading may be found in the small four-unit condenser block in the first R. F. stage (Fig. 4); this is part No. 1728. There are three such blocks in this model, each located at the left of its R. F. stage, with leads at the base connecting inside the chassis. Their colors, as shown in the diagram, are red, yellow, green and brown; it is the capacity to which the red lead is connected which opened and caused the fading. This condenser is between chassis and the transformer's secondary; across a 750,000-ohm red resistor. The remedy is replacement with the proper capacity, 0.1-mf.

Super-Heterodyne Suggestions

SINCE the trend of the radio design has returned to the formerly-popular superheterodyne, perhaps some notes concerning a few of the models which have lately made their appearance on the market will be of interest.

In the Silver-Marshall super, a compact job (which is being sold under several names), the speaker cable of six wires terminates in a five-prong plug, which is inserted into a receptacle provided at the rear of the chassis. One wire (the black) is not connected to the plug, but must be grounded to the chassis before any reception is obtained. (See Data Sheet No. 34, January, 1931, RADIO-CRAFT.)

If the fine wire of the volume-control resistor strip breaks, intermittent reception is caused; the remedy is replacement. The value of this resistance is 3,000 ohms.

Care should be exercised in selecting '27 tubes for the new Atwater Kent pentode model; or difficulty may be encountered.

After a great deal of bother and fuss over hum in a new "Model 20" Majestic, using variable mu ("Multi-Mu") tubes, the cause was found in an open by-pass across the 35,000-ohm resistor which biases the second detector. The unit contains a pair of 0.4-mf. capacities.

One of the most perplexing jobs yet encountered by the writer was a Radiola "60"; for a long time, volume had been decreasing. Naturally, the tubes were first suspected; those in the set were not too good, but their replacement did not greatly improve reception. The next move was to take down the condenser gang, in order to check and realign the I.F. transformer adjustments. These are tuned to 180 kc.; trimmers and compensators were then adjusted for maximum efficiency.

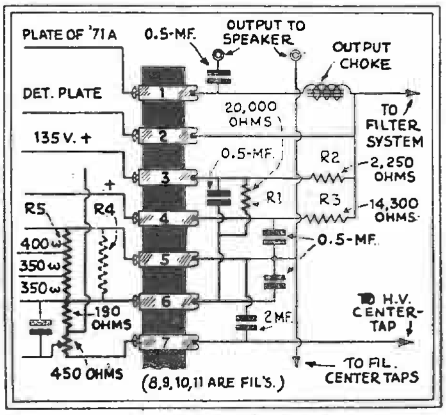

Fig. 2

The terminal strip of the Radiola "60"; for distance reception, sensitivity may be increased by introducing R4, especially as a variable panel control.

However, all this work counted for little; only three of the powerful broadcasters were picked up with any degree of volume. With the aid of a schematic circuit, all voltages, resistances, and capacities were carefully checked. The plate voltages of all amplifiers were found about 40 volts lower than specifications. The condensers were not at fault; so either a partially-grounded coil or a bad resistor was indicated. Finally, under the pack, a heavy black carbon resistor (see Fig. 1) was found which should have been, according to the diagram, 20,000 ohms; it tested 14,000. It was removed and replaced by a 25,000-ohm component, the handiest value obtainable. Immediately the voltages became slightly above normal, and the set perked as it had never done before. This resistor is a bleeder, connected across the 135-volt supply tap to prevent any excessive rise in voltage; such as would occur if all the tubes were removed, and which might cause punctured filter condensers. In some instances, a lack of a few thousand ohms in this resistor has caused trouble.

Improving Sensitivity

While the Radiola "60" is highly sensitive and selective when in best operating condition, the writer has been approached more than once with a request to "do something to it," to pick up the stations which come in very weakly. After checking up the set, as described above, the next step was to try additional by-passes in different parts of the set. This did not help; it then seemed advisable to increase the plate voltage; and this was done by replacing the large wire-wound resistor under the pack with one of lower value (about 500 ohms) but without effecting any improvement. Then resistors of different values were shunted across the four sections of the wire-wound unit which is secured to the front wall of the receiver, next the volume control. The tuning dial had been set nearly at 30 and, when a 700-ohm resistor was shunted across the 400-ohm section (next the volume control) Omaha came crashing in with a wallop. When this shunt was removed, reception ceased.

After experiments with different values, centering around the biasing resistors, it was noted that a resistor of 400 to 700 ohms worked best when shunted across the 400-ohm unit; but that the volume control had then no effect when a powerful station was being received. To provide for this, a S.P.S.T. switch was mounted on the cabinet front, in series with one leg of the 400-ohm shunt, and marked "Local-Distance." An even better stunt, though more difficult, is to mount a variable resistor (about 10,000 ohms) on the cabinet front, and connect it across the two lugs on the terminal strip. When the full resistance is used, it will have no effect on the circuit but, as the resistance is varied, it will be found that best results with various stations are obtained at different settings. Operation with this method is more efficient than the first, but less simple.

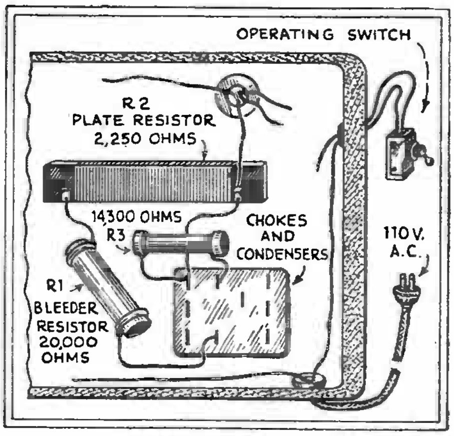

Fig. 1

Position of the large resistors in the Radiola "60" power pack.

Adjusting Compensating Condensers

The new Philco "Model 111" super presents a formidable appearance when it comes in for realignment. It has nine adjustments; these for the first I.F. primary and secondary are made from beneath the chassis, the rest from above. This set uses an intermediate frequency of 175 kc.; first adjust the I.F. stages at this frequency (in order 3, 2, 1), and then adjust the high-frequency condenser at 1,400 kc. when the dial reads in conformity with this frequency. The low-frequency is then adjusted at 600 kc. The two antenna compensators may be adjusted before or after this procedure; at about 1400 kc. for maximum reception. All adjustments are made for maximum response with an accurately-calibrated oscillator. Do not forget the detector compensator.

"That elusive hum" was recently encountered on a Majestic "90" chassis; the hum was apparent off the station, but at resonance it was very loud. This condition was caused by an open filter condenser in the pack; hum on resonance may be caused by any condenser after the choke.

A cause of intermittent and noisy reception on Kennedy "Model 526" has been found in a faulty compensating condenser; there are two of these. In order to adjust them, the shields must be taken off the screen-grid tubes. The adjusting screws look like simple mounting screws; they are located on the condenser housing between the first and second '24's, and between the third '24 and '27. When the insulation cracks, it is usually necessary to replace these.

The Radiola "44" and "46" include a "local - distance" S.P.D.T. switch which grounds the antenna loading coil through a .00023-mf. condenser when at local setting. When a complaint of feeble reception on the "local" position is received, it may usually be corrected in the following manner. Remove the chassis; the compensating condenser adjustments are located in the front. They are plain flat-head screws, flush with the chassis. Align the set with the switch in "local" position. It may be that replacement of the .00023-mf. condenser is necessary; if this opens, or alters its capacity, the receiver will not be properly grounded.

On the Brunswick "S-31" phonograph combination, intermittent action may be caused by the 0.1-mf. tubular condenser, one terminal of which is soldered to one of the lugs of the radio-transfer switch.

Causes of "Fading" in Some Well-Known Receivers

BY now, it would seem, manufacturers of receiving sets should have discovered the weaknesses of various constituent parts used in their product, and have taken steps to substitute superior components. However, the Service Man is here, and his work has to be done.

One of the hardest tasks that befalls him in his daily routine is to trace the cause of "fading"; by which term is described both the gradual falling-off of volume, with slow recovery, and the sudden cutting of volume to just above a whisper, with resumption just as sudden. Such a complaint may be caused by a defect in, practically, any part in the whole receiver; and it is therefore very different to locate the fault. However, experience with the repeated failure of a definite part in a certain model of receiver helps to ease this task greatly. From time to time, the writer has described various causes of fading which he has experienced; here are others.

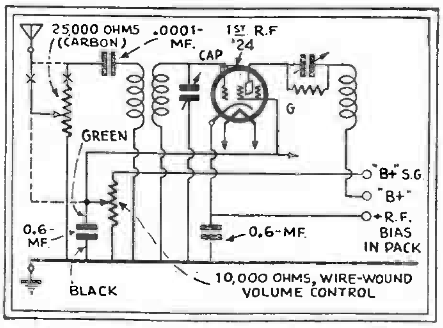

Fig. 1

An open screen-grid bypass may cause fading; as well as the antenna unit of a dual volume control. (Kolster "K43.")

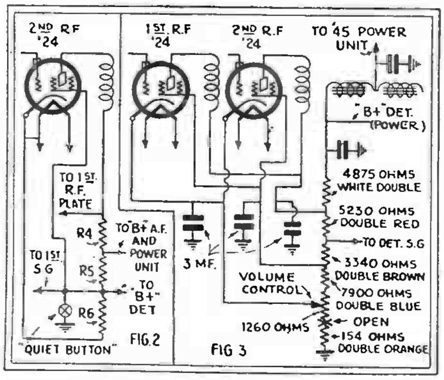

FIG.2 FIG 3

Left, voltage divider of the Colonial "33" and "34 A.C." R4, 11,000 ohms; R5, 60,000; R6, 50,000. Right, a reason for enormous cathode voltages (Majestic "131"-"132.")

Fading in Kolsters

In the Kolster "K43," all screen-grids receive the same voltage and are bypassed by an 0.6-mf. condenser; this capacity unit is one of two contained in an oblong metallic housing, and has a green lead which is connected to the "G" terminal of the second R.F. socket. (See Fig. 1.) This condenser is subject to open circuits, and to a change in its impedance also; thus causing fading of either type—gradual or sudden. Replacing this capacity with a ½- to 1-mf. unit, of good quality, will clear up this defect. (The common terminal lead of this block is black; and connected to the metal framework of the hum balancer.)

Another reason for the complaint of fading, in this model, lies in the volume control; this may be readily tested by pulling the control knob out and in several times, or by rotating the knob while pulling it out. The volume control, which is located at the rear of the chassis, and controlled by a long shaft, has two sections; one a wire-wound affair and the other a carbon-type. The latter is the cause of the trouble; the resistance element becomes caked and flaky and cracks, causing resistance variations and fading. This is a 25,000-ohm resistor, used as an antenna potentiometer; the 10,000-ohm wire-wound potentiometer controls the screen-grid voltage. Where to obtain an identical replacement unit might be a question; but this is not necessary. Remove the defective unit from the circuit, by disconnecting from the end of the resistance strip the lead to the .0001-mf. condenser; and connect this lead, instead of the potentiometer arm, to the antenna post. There will be little difference in the operation and effect of the volume control without this unit.

Incidentally, in this "K43" model, look for "floating" R.F. coils; these inductances may come loose from their supports and cause much annoyance. This is rare, however, but there will be no harm if the coils are tightened up a bit.

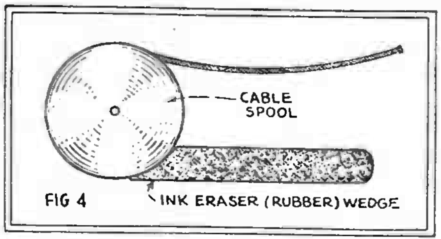

FIG 4

Another recommended addition for the Service Man's kit is an ink eraser; which will at times take the place of a third hand.

R.F. Coil Grounded

A Brunswick "Model 22" was returned for fading, several times, to the shop of one of the largest servicing organizations in New York. Each time it had been placed on a "life test"; but nothing happened, and orders were given to take the chassis back to the owner's home and make every attempt to locate the trouble there.

After a great deal of trouble, the R.F. shield cans were removed to be certain that all was "O. K. under the tin." Then the input or first R.F. coil was found with one connecting lug so close to the chassis that the difference was not perceptible to the naked eye. To cause momentary or continued shorting and fading, vibration need not have been violent. This coil is wound on a very light form, to reduce losses, and it is very difficult to bend the lugs up out of the way for fear of snapping them off. Insulating them with ordinary tape, however, will do nicely and eliminate recurrence of the complaint. At the same time, examine the connections to the "local-distance" switch for corroded joints.

The tone control in this model is a Bradley unit. If the knob is not loose, yet can be rotated without any change in pitch, the bakelite gears within are stripped. Repair is hardly practicable, and the unit should be replaced.

Unduly High Voltages

In the endeavor to deliver quick results, many Service Men make hasty repairs which, in certain cases, do more harm than good. For instance, in the Colonial "33" and "34" A.C. models, there is a three-section voltage divider (Fig. 2) which is often the cause of an inoperative receiver. The 60,000-ohm section is most apt to open, the 11,000-ohm slightly less so. Merely shorting the 60,000-ohm resistor, which cuts down the high voltage to between 100 and 70 for the screen-grids, will obtain reception, but seriously impair results and reproduction and ruin a pair of perfectly good '24 tubes; since it puts 200 volts on the screens and causes oscillation and general instability. Replace this section with another as near as possible to the proper value.

To those who have had any experience with the Majestic "131" or "132," it will be interesting to note that sometimes a reading of 300 volts will be obtained between the cathodes of the first and second R.F. tubes and the chassis. This has been encountered when the volume control has twisted around until the blue wire on one side had broken away. This is due to the loosening of the nut mounting this unit, which may take place after it has been in use for some time. (See Fig. 3.)

Installing a new drive-cable on a Bosch "48" is a simple job; the following is the procedure. Procure copper or phosphor-bronze cable of sufficient strength and weight; using too light a cable only invites more trouble. Remove the front plate, after taking off the tuning knobs. When the tuning scale and the old cable have been removed, loosen the set screw holding the threaded rear winding spool; fasten the new wire, soldering a loop around the screw, and tighten this again. Wind up the wire on a spool, pass it under the pulley and up. The delicate part of the operation comes at this point for, as soon as the shaft or wire is released, the wire comes off the spool. If an ordinary, wedge-shaped rubber eraser is forced under the rear spool, after it has been wound (Fig. 4) the wire will remain in place; the shaft and spool will be unable to move, and both hands may be used to complete the job.

Changing Filament Supply

In the Freshman "2N" receiver, fading has often been traced to loose terminals and corroded connections in the power pack. Most frequently, it is the 1½-volt ('26 filament) terminals which loosen; and a varying voltage will result. When working on these sets, it is best to remove the pack cover, and tighten these terminals with a heavy screwdriver, even though no trouble has been experienced here. If one of the 1½-volt terminals is open, it is not necessary, as a rule, to replace the power transformer or add an additional filament transformer; simply connect the leads, which ran to the open winding, to the other. Usually, enough current can be obtained in this manner to operate all '26 tubes properly. However, if the R.F. filaments are being heated from the audio winding, it will be necessary to change the biasing resistor. Remove the 1,800-ohm flexible resistor (Fig. 5) and replace it with the 500 ohm resistor used with the R.F. winding; since this resistor is now carrying the plate current of all four tubes, 1,800 ohms would put on them a bias much too high.

Adjusting the Sonora Motorboard

There have been sold many Sonora combination sets, using the Loftin-White amplifier and a special series-wound phonograph motor. The latter makes use of an unusual stopping arrangement, which sometimes gets out of order; it works in conjunction with the pickup arm. When the arm is swung away from the turntable, as far as it will go, the switch is closed, and the motor will function. At the end of each record, whether the eccentric groove is present or not, the table will turn a number of times and then stop; this is due to the opening of the switch and the application of the automatic brake lever. If the turntable does not stop when the record is finished, or if it stops before the record is ended, it will be necessary to remove the motor board. Disconnect all wires running to it; that is, the A.C. motor plug, the ground wire, and the three leads from the pickup to the connection strip at the rear of the cabinet. Lay the motor board in a convenient position, and measure the distance from the center of the turntable's spindle to the center of the mounting screw of the pickup arm. This should be exactly 9 inches; and the measurement must be made accurately, for a discrepancy of a fraction of an inch will cause one of the complaints above mentioned. To permit of adjustment, the mounting holes for all parts have purposely been made large. It will be necessary to check the alignment of the centers of lever arms and motors; these must be in a straight line—(M), (C), (P), (W) (See Fig. 6.) Loosen the screws, bring the points into a straight line and see that the centers of (M) and (W) are exactly 9.00 inches apart. It is important that the pin (P) shall slide freely along the long edge of the lever (L). The screws may then be tightened, and the motor board replaced and reconnected.

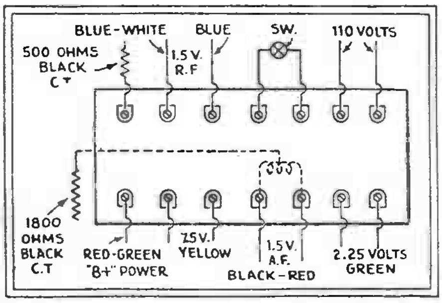

Fig. 5

You can switch tubes from one winding to another; but see that the biasing resistor has the proper value. (Freshman "2N.")

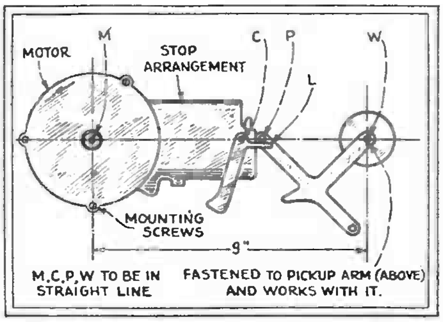

Fig. 6

The automatic stop of the Sonora phonograph combination must be correctly lined up, to stop the motor at the right time.

Give the Receiver Air!

Recently a discussion took place, among a group of Service Men, why screen-grid tubes "go west" much more frequently and quickly in some receivers than in others. The argument was advanced that the heating, and the ventilation of the tubes have much to do with this; that when they reach a certain temperature, their efficiency will be reduced and fading caused until the tubes cool to their normal temperature. After this, the cycle would be repeated.

With the idea of making a test, some of the worst offenders (such as the Colonial "32A.C", which has double shielding for the screen-grid tubes; the Fada "32, 44, 46" series, and others) were set up, and left on "life test" with sets of perfect tubes in each. It was considered that placement of the sets might have much to do in the case. Some of the test sets were placed in advantageous positions, to secure high ventilation, and others as they would be ordinarily in the home.

The tests were not carried on too scientifically but, after some weeks of trial, it was found that those which did not secure the greater degree of ventilation contained one or more fading tubes, and that effect did occur. The Colonial set which was operated with only the inner set of shield cans showed four perfect '24s, while the other contained two "faders." Each set of similar make was operated under the same filament voltages.

Which would suggest that, when installing a receiver, it might be well to have its ventilation in mind and that, if shields do not provide sufficient openings to dissipate the heat the tubes generate, holes should be made or enlarged.

Double Spot Tuning in Bosch 60

AN old adage, "History repeats itself," is suggested continually in the repair and servicing of radio receivers. Certain makes and models have definite points where the first weakness is most liable to appear; and the Service Man who knows these tendencies can do the quickest and best job. Some of the key positions of a number of well-known receivers have been found, in the writer's experience, as follows:

Bosch

In the Bosch "60 A. C.," a most remarkable condition may be found; on tuning for a given station, it may be found in two places, each ten kilocycles on the dial from its normal position. This condition will be accompanied by lack of volume, insensitivity, choking, and improper operation of the silent tuning meter. The trouble lies in a small (one-inch) black and white resistor, which is located directly under the second '24 socket from the left (looking from the rear of the chassis) and is connected in the detector's screen circuit. If this resistor is defective, it must be replaced with a one- or two-megohm leak.

In this model, as well as in the "58," when the local-distance switch is in "local" position, the aerial is disconnected, and a 500-ohm yellow carbon resistor is placed in series between the antenna tuning condenser and ground. If vibration causes the ends of this resistor to loosen and cause an "open," signal pickup in local position will be greatly decreased or lost entirely.

In both these models, hum or resonance will be caused by open circuits in the 1-mf. condensers connected between one side of the line and the chassis.

Brunswick

In the Brunswick "31 A C" filter-condenser block, the components seldom break down or short; but their opening results in abnormal hum; bridging the filter condensers successively with a unit of one or two microfarads will soon determine the section at fault. Erratic reception (that is, sudden loud bursts) can usually be traced to the contacts of the local-distance switch; the switch screws should be tightened and the blades bent until contact can be made only upon closing the switch.

In the "15" and "22" Brunswick models, resonance hum may be eliminated by removing the small (.00025-mf.) condenser which is soldered to the local-distance switch; it will be found also that the performance of the receiver has been much improved by this change. Cases of fading have been caused by short-circuiting of the small black, oblong bypass condensers located next to each UY socket. The symptoms are rapid changes in volume under vibration; and the condensers are easily checked by bridging them with ¼-mf. capacities. Inoperation, with lowered plate voltages, as often said before, may be caused by a short in the 1-mf. condenser across the filter output; this is identified by two green wires, emerging from the filter block assembly, and connected to the last two lugs of the terminal block.

Colonial

In the Colonial "33" and "34," the most common defect is found in the 121,000-ohm voltage divider; the carbon-strip wound resistor often will not carry the current. Failure of the 11,000-ohm section will result in lack of voltage on the R. F. plates, while if the 60,000-ohm section opens, there is no voltage on the screens. The 50,000-ohm center section usually gives little trouble; but the indication when it is open is oscillation, and R. F. screen and plate voltages higher than 90 and 200, respectively.

The 420-ohm center tapped resistor located between the two '45 sockets, and in the negative leg of the power supply, may be the cause of an inoperative receiver; the negative side of this resistor opens more frequently. To short this will give reception; but this expedient should be only temporary.

Occasionally, one of these models will be found to oscillate very weakly; aligning the set on the higher frequencies will give poor reception on the lower frequencies, and vice versa. This condition may be due to one or more open 0.2-mf. condensers, located beneath the condenser-gang shield; these are by-passes in the secondary returns of the first, second and detector stages. One terminal is soldered directly to each coil.

Distortion and lack of grid bias on the '45 amplifiers is seldom due to an open biasing resistor, in these models; it is much more likely to be found due to an open 100,000-ohm (green) carbon resistor, which connects from the center tap of the input push-pull transformer secondary to the chassis, and is mounted directly on the transformer (Fig. 1A).

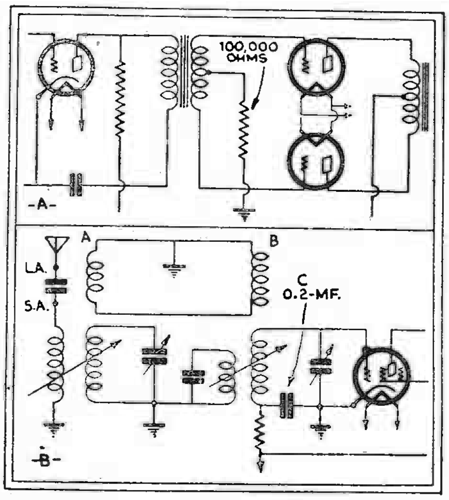

Fig. 1

Portions of the Colonial "33" and "34" circuit: above, grid resistor in the push-pull input; below, a coupling unit in the band-pass filter, outside the electrical system of the receiver.

It may, infrequently, be found that volume is good on all stations except those at the higher frequencies, although resistors and condensers test perfect; tube voltages are O.K., etc. The cause of this condition will probably be found in two small bobbin coils, which are mounted in the antenna and first R. F. units of the band-pass filter; but these are electrically unconnected to the circuit. The bottom shield must be removed, and a continuity test made of each coil (A and B, Fig. 1B). Since these are used to couple the tuning unit more effectively, an open in either coil will cause reduced volume; it will probably occur at the lug, from which the lead breaks away.

Stromberg-Carlson

Little trouble is experienced with the Stromberg-Carlson "10" and "11," except in certain instances; the most common troubles lie in an ineffective range control or volume control. Since some Service Men make a practice of using a ground as an aerial, the small (.015-mf.) range condenser is subjected to a stress for which it was not designed; it sometimes opens, and sometimes breaks down. In the first case, pulling the switch out has no result, and reception will be unchanged; in the second, the aerial is shorted directly to ground when the switch is in local position. (Fig. 2.)

Ineffectiveness of the volume control, when the set will operate at full volume without regard to the setting, may be caused by one of several defects; most frequently, by the 100,000-ohm (black) carbon resistor connected from the control-grid return of the first and third R. F. tubes and the arm of the potentiometer. Sometimes a shorted 0.3-mf. condenser will cause the same effect; these condensers are in the same unit, between chassis and the secondary return of the first and third tubes.

This condenser unit will be seen, on the under side of the chassis, between the first and second R. F. sockets; only two lugs are visible, each connecting to a condenser, while the can is common, being mounted on the chassis. The 100,000-ohm resistor is contained, with another resistor, in a bakelite mounting, located next to the condenser unit.

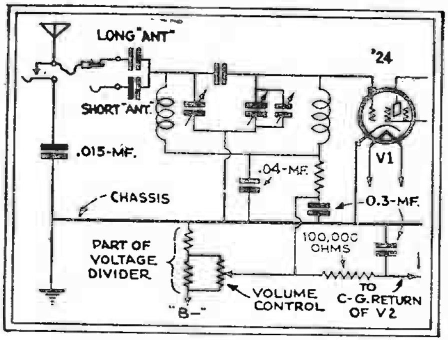

Fig. 2

Input of the Stromberg-Carlson "10" and "11," showing the "range" condenser and the connection of the volume control

Annoying fading, found lately in the Stromberg-Carlson "642" and "654," was due to the unit containing the detector's plate choke; the included condensers short intermittently to the metal can.

Sparton

On Sparton "737" and "740" models, the type-485 tubes may be the cause of hum and lack of control over volume; seven of these are used in the set. The number of shorted, loose-element and microphonic tubes of this type found upon installation is probably increased by the method of shipping them along with the set.

With the great number of sets of this make in use, service calls due to fading are increasing; the complaint is usually of "a continuous cutting in and out of volume."

So far, three types of causes have been found. The first is in a poor contact between the band-pass pre-selector unit and the R.F. amplifier proper, by a bayonet pin sliding into a special spring socket or clip; the spring must be tight, and the pin guided correctly into its receptacle.

The R.F. unit, with five stages of amplification and a detector, is untuned. The coils are wound on small wooden bobbins which are fastened both above and below the subpanel carrying the tube sockets; the wire is very fine and may readily snap at the soldering lug, or where it emerges from the hole. While a make-and-break connection may not interrupt reception altogether (since the primary and secondary are wound together, giving very close coupling), the intermittent increase and decrease of the signal transfer is very marked. Sometimes intermittent shorts of a coil cause similar complaints. The usual remedy is replacement; though sometimes the loose end can be fished out and resoldered into place.

A third trouble is less frequently experienced: if the nuts work loose from the bolts which ground together the units of these sets (by metal strips passing under them), intermittent connection is produced.

Victor

In the Victor five-circuit "Micro-Synchronous" chassis, used in the "57" and other models, failure or burnout of one of the many R.F. chokes may occur; these are used in the plate and screen-grid leads of the R.F. tubes. The temptation of the Service Man to restore operation by shorting the defective part should be resisted; for the removal of the choke makes possible circuit oscillation, which will ruin tone quality and make tuning difficult.

Before servicing Victor "RE-35," "RE-39" and "RE-57" receivers, it is good policy for the Service Man to equip himself with several carbon resistors and several R. F. chokes; seldom is any other part of these receivers the cause of complaint. The most common reason for lack of operation is an open detector plate resistor; this 500,000-ohm carbon resistor is located beneath the bakelite resistor bracket. Although the current flowing through it is never more than 0.4 milliampere the original resistor may be unable to carry the current; replacement with a 2-watt component is advisable.

When these receivers act peculiarly—become mushy and husky, and then clear up if the control-grid cap of the detector is touched—test the detector's screen-grid voltage. If there is none, then the 1¼-meg. carbon resistor, also mounted under the bakelite bracket, is open. This value is not very critical, and the substitution of a half- or a one-megohm leak will not noticeably affect the operation.

It is advisable to replace these units when open, with some standard unit which will stand up under the current. It is not advisable to short out these open chokes, as oscillation will be introduced, on most models.

On the vertically-mounted Victor and RCA "48" receivers, only two complaints have been noted often. When the volume rises and falls with the vibration of the set, the volume control will be found at fault; grasping the knob and rotating it back and forth will determine this. A new type of control is now being supplied for replacement in these models, and it is important that it should be used.

The other cause of complaint is an open secondary on an R. F. coil; invariably at the lug where the wire passes through the eyelet and is soldered to the lug. This break will cause similar rise and fall of volume.

SERVICING SPARTONS, BRUNSWICKS, AND MAJESTICS

A COMMON complaint on many Sparton model "600," "610," "620" and "737" (the same chassis is used in all these types) and "740" receivers (since the "595" output tube is the same as the "'50" tube) receivers is lack of control of volume. These models are similar to all late Sparton's except for an additional tuned R.F. stage located in the band pass tuner assembly as shown in Fig. 1.

At the base of the socket for this tube, beneath the shield, will be found a 0.2-mf. condenser, which is used to bypass the cathode bias resistor network of which the volume control, resistor R1, is a part. When this condenser unit becomes shorted, the set operates at full volume because the bias resistor is shorted. This same unit is often the cause of intermittent or fading reception, where it opens or short circuits.

In order to enable the installer or repairman easy access to the sets, the different units comprising the chassis are mounted on a board which slides back from the cabinet. The volume control is mounted on a metal panel which is fastened to this same board. When the board is pushed back into place, the panel is forced back about ¼-in., often shorting the volume control lugs to the R.F. amplifier assembly.

The manufacturers of Sparton receivers have been turning out two model "737" receivers. The only visual differences between the two lie in the chassis color, and the power transformer and push-pull input audio transformer design. One model is sprayed in gold while the other is colored black.

The "black" model employs a power transformer originally designed for their old "301" model, using two '81 rectifiers, and two '50 power tubes. The filament voltage has been cut down to five volts to heat the single '80 and the pair of 183 power tubes by means of resistors in each filament leg. The high voltage output has been decreased by the addition of a large 1200-ohm resistor which is located alongside the '80 rectifier.

The cause of many inoperative "black" receivers will be found in an open resistor labeled "1200 ohms." For some reason or other, this "301" transformer, designed for heavier use does not stand the gaff. Perhaps a hundred of these units have had to be replaced because of shorted primary or high-voltage-secondary windings. When "no filament" is obtained on the '80 or 183 tubes, look to open step-down resistors.

The audio transformer in the "black" job is a Pacent, and is so closely mounted to the 183 tube next to it that the tube cannot fit securely into its socket, being forced to one side. Another hole should be drilled in the metal chassis so that the transformer can be shifted to one side a bit.

In the Sparton 400 midget chassis series,

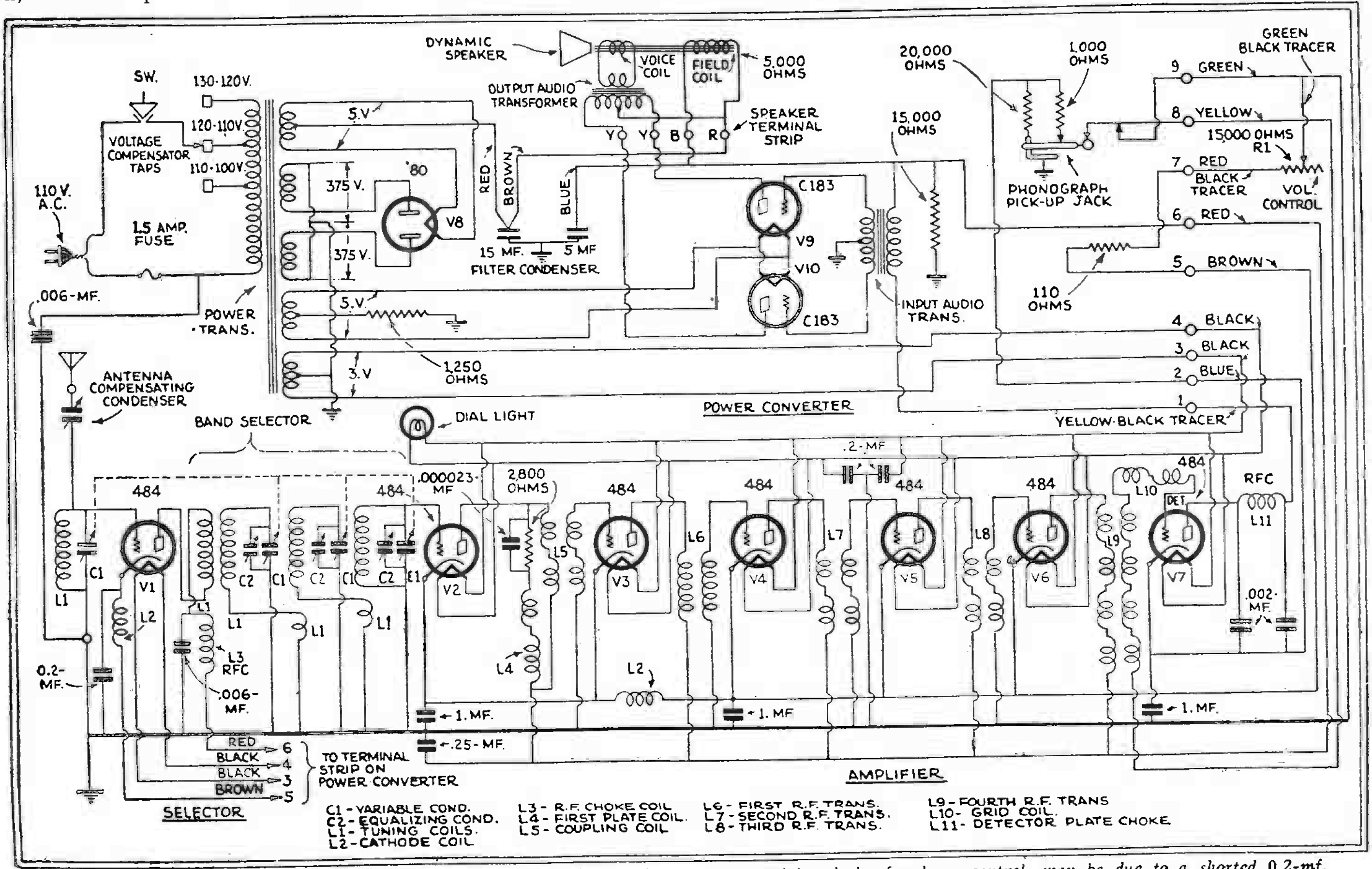

Fig. 1. The Sparton Models "600" "610" and "737" receivers. A common complaint, lack of volume control, may be due to a shorted 0.2-mf.

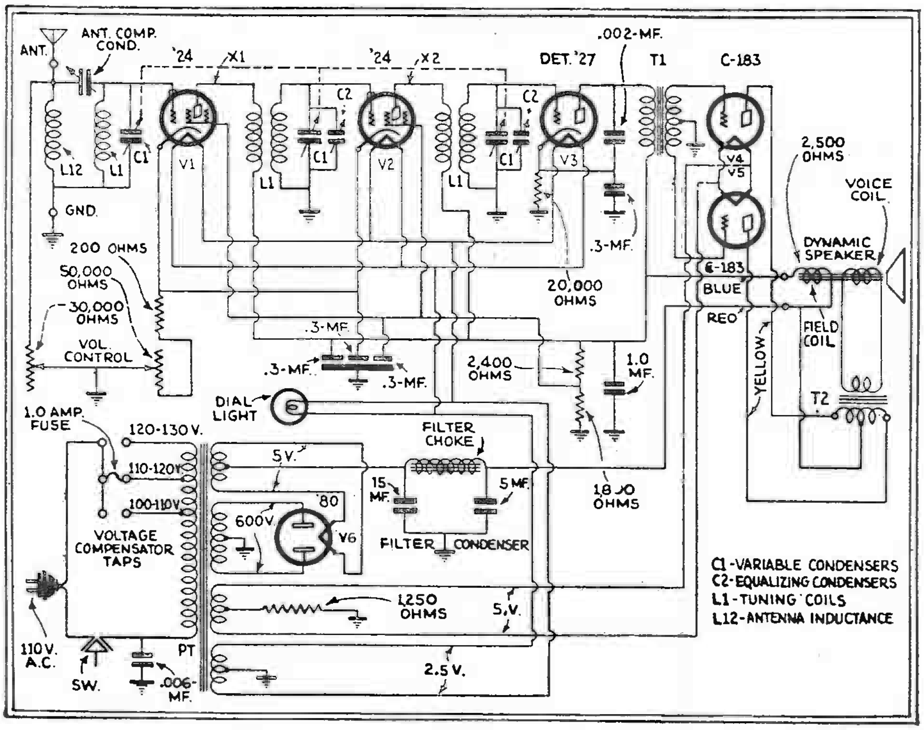

Fig. 2

Schematic diagram of the Sparton "400" receiver. Shielded plate leads X1 and X2 were replaced with heavily insulated, unshielded leads to prevent short-circuits to ground.

an annoying condition is often found that was at first difficult to trace. Recently one of these receivers was returned to a repair shop with an R.F. plate-to-chassis short. The several bypass condensers were checked but found perfect; as well as the common "B+" terminal located beneath the chassis, which is insulated from the chassis by means of two insulating washers that sometimes shift. All leads (in the R.F. circuits) were tested by unsoldering them from their respective lugs and terminals. It was not until this had been done that the short was located.

This set used red, shielded leads to connect the plates of the type '24 tubes to the R.F. coils. The insulation on these leads is poor and breaks down within the shield, causing the wire to short to the grounded shield. A heavy insulated, *unshielded* lead was installed to replace the defective shielded wire. These leads are indicated by X1 and X2, Fig. 2.

Noisy reception in these receivers has often been traced to dust and small foreign particles between the condenser-gang plates, which are very close together—thus making a condition such as this quite common.

The Brunswick models "14," "21" and "31" receivers employ a tuning-drive-cable arrangement that is far superior to many other systems—in which forcing the tuning knob beyond either end of the scale may snap the drive cable. This is impossible in the Brunswick receivers due to the use of a small friction gear over which the cord passes; turning the tuning knob beyond the tuning range only causing the gear to slip around. However, cases may be found where the knob can be turned without the consequent actuation of the condenser gang. Almost invariably, this is caused by a loose cord, which may be taken up by increasing the tension of the spring located on the side of the dial. The spring is attached to the free end of the drive cord on one end, and fastens to a screw on the other. This screw is in a slotted hole, permitting it to be shifted so as to increase or decrease the spring tension. After the unnecessary slack has been taken up, the screw may be tightened.

Noisy and intermittent reception on these models has often been caused by a defective local-distance switch, the blades of which become loose after some use. The remedy is usually found in replacement; though, tightening the screws holding the blades has sometimes cleared up the difficulty.

A large number of Bosch "28" and "29" receivers, lately, have showed up with the common complaint of "noisy reception." Several of these were taken to the repair shop to determine the cause of the trouble. The type '26 tubes were each, in turn, pulled out of the circuit starting with the 1st R.F. stage, but, with the exception of two sets, the noise continued. When the '27 detector tube was removed, about 75% of the noise disappeared in all except one case.

After a new and perfect first A.F. transformer had been installed in place of the one in the set, the noise cleared up in all except three sets. One had a very noisy carbon volume control that made a racket even though the control was not touched! When a new volume control was put in, that set was in perfect shape. The remaining two receivers caused quite a bit of trouble. The grid-leak and grid-condenser were changed with no change in results. Finally the detector plate 50,000 ohm "glastor" resistor was replaced, and the noisy condition cleared up. Some sets needed both the transformer and the resistor replacements, before the complaint was settled.

For sharp tuning in the first R.F. stage, these same models use a variometer that is often the source of varying volume, or "fading." Reception will be normal for a time and then drop in volume, necessitating a re-adjustment of the volume control. After several minutes, reception will become "normal" once more. Upon examination, a black lead will be disclosed, connected to one side of the stator of the variometer. This lead passes through a hole in the chassis and continues on to the other side. Vibration causes the metal chassis to bite through the insulation of the lead at the hole, for the lead is drawn quite taut, and causes the annoying condition of fading. A heavily insulated lead, additionally protected where it passes through the hole, should be used to replace the old lead.

A great deal has been spoken about the Majestic "60" series superheterodynes. The first batch of these sets that were placed upon the market were wired with some highly absorbent cotton covered leads. The slightest bit of moisture was enough to throw the set out of balance. Several resistors used were affected in the same way. In some sets the tuning meter would become inoperative; in others, very erratic. The main trouble however was a very weak, or even inoperative, receiver. These sets can be rewired according to the extensive, detailed data supplied by Grigsby-Grunow; or sent to the nearest distributor of Majestic receivers, who should make the necessary changes without charge.

Special Notes on the Zenith 50 Series

WHILE on the trail of the elusive hum some time ago, an effort was made to determine the cause and cure of this annoying condition, which is present in most of the Zenith "50" series receivers. Several sets were taken down for purposes of isolating or locating the fault of the complaint. The very first move was the substitution of power transformers with those of different manufacture, but this was of no help. Electrolytic condensers were changed and larger by-pass condensers were employed in the different circuits, all to no avail. Condensers were connected across the filter chokes in various tuned filter circuits. These changes in most cases reduced the hum a slight amount, but the result on the whole was not very satisfactory. However, one result was obtained, that of proving definitely that the trouble did not lie in the filter circuit of the pack.

This receiver utilizes two stages of push-pull audio amplification, which is preceded by a single '27 audio stage. The second stage uses '27 type tubes in push-pull. When the '24 detector was removed, the hum still remained, pointing to the audio stages as the only possible source of the complaint.

Different sized carbon resistors were connected or shunted across the grids of the second stage '27 tubes. Finally a 250,000 ohm resistor turned the trick. The hum was almost entirely "killed" with very little decrease in volume. In some sets it

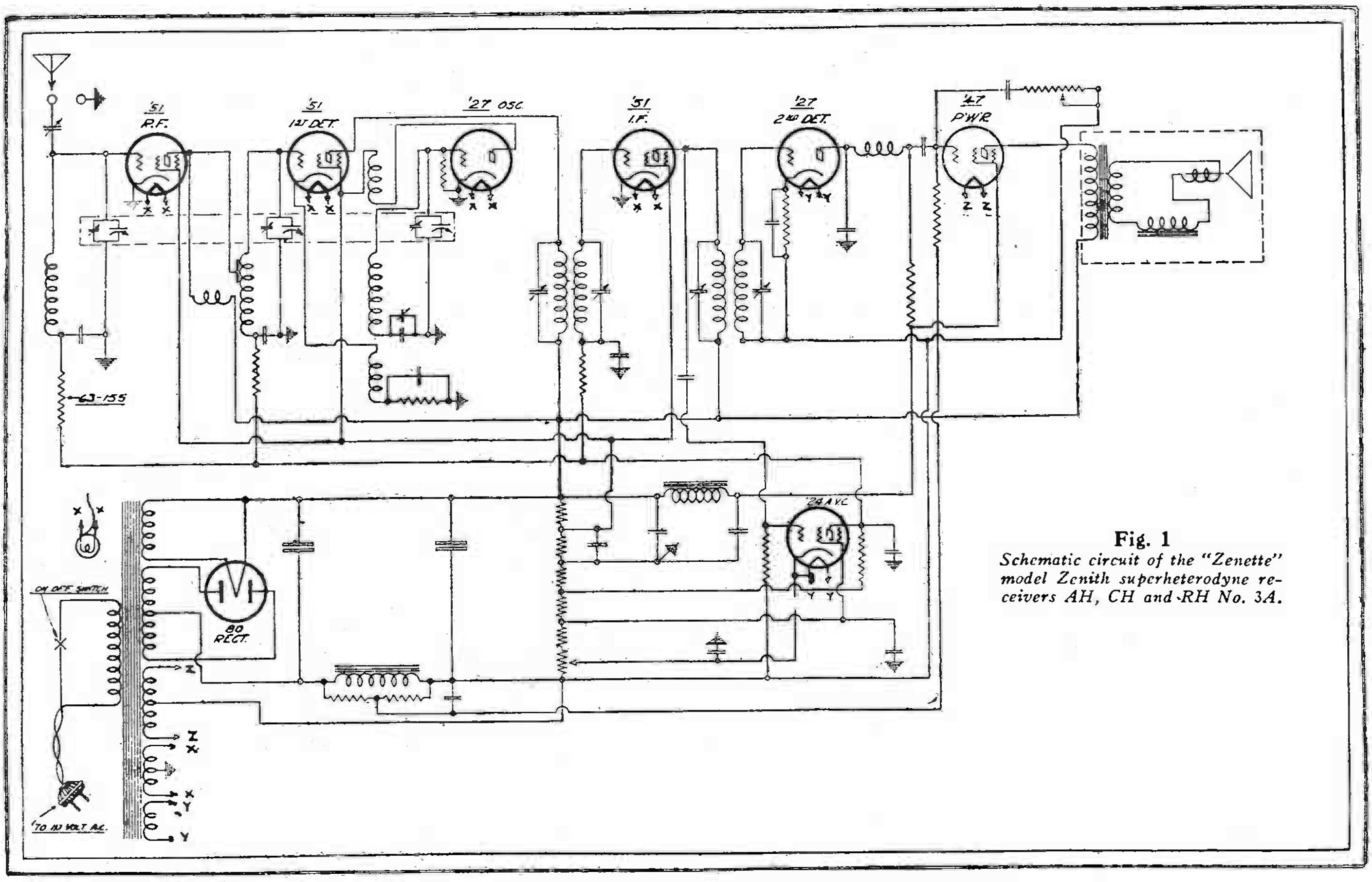

Fig. 1
Schematic circuit of the "Zenette" model Zenith superheterodyne receivers AH, CH and RH No. 3A.

was necessary to employ a 100,000 ohm resistor to obtain the same results. All steps taken in the elimination have purposely been set down so that hum in other receivers can be located in like manner.

Perhaps many Service Men have been confronted with a Majestic model "132" receiver that operated intermittently with some noise and fading. Especially when pressure was applied to the tuning knob did this complaint make itself known. The trouble was finally located in the rotor contact of the tuning condenser gang. The rotor of the gang is not electrically connected to the chassis but only relies upon a mechanical friction contact for its connection. To get at the trouble, the shield must be removed from the tuning gang. At the front end of the shaft, in back of the dial and directly outside the bath-tub will be seen the friction collar upon which the copper contact rides. The contact will be found to be corroded and most of its tension gone. This contact should be removed by loosening and taking out the two screws that hold it. Polish it with steel wool and clean well. The friction collar should then be taken off by loosening the set screw, and the side which the contact arm rides on should be thoroughly cleaned of all oil and polished with sandpaper or steel wool. Before the shield is replaced, use a pipe cleaner on all the plates of the variable condensers and make certain that the plates are not in too close proximity to each other, as they may short, a more than infrequent complaint with these sets.

Perhaps the most common trouble found in Majestic sets since the Model "90" series receivers were turned out, is in shorted transformer units. Several months ago, mention was made of a shorted phono-pickup input transformer. The short turned out to be nothing more than the connecting lug biting into the core of the transformer—beneath the cardboard terminal strip. Since that time many primaries of push-pull input transformers have been found shorted in the same manner.

It is not necessary to discard the supposedly "shorted" unit, but only to disregard the lug terminal. Unsolder the transformer lead that connects to the lug and connect it directly to the proper circuit lead. This can be done conveniently, as the transformer lead is not soldered to the underside of the lug but emerges a short distance from it, the lug being used only as a means for coupling the two leads. This explanation will be more clearly understood by reference to Fig. 3.

Great care should be exercised in the handling of the new Zenette superheterodyne receiver, Fig. 1. This set uses a pair of 6 mf. electrolytic condensers in such manner that a high voltage exists between the cans of the condensers. The field of the dynamic speaker is used as a choke in the negative return of the filter system and is also utilized to obtain grid bias for the pentode power tube. Consequently, the cans of the electrolytics are above ground potential and carry sufficient "wallop" to cause physical injury. Incidentally, several cases of fading have been reported on this set and where it has not been caused by a defective screen-grid tube or poor soldered connections, it has been traced to either or both of the 0.1-mf. small tubular by-pass condensers in the first-detector and intermediate frequency grid returns. The remedy is obvious.

Where these receivers are found to be insensitive on the high frequency end of the scale, it is necessary to rebalance the condenser gang, which contains two compensators. These should be aligned at 1500 and 600 kilocycles respectively. In conjunction with these adjustments, the oscillator trimmer may also be adjusted with good results. This condenser adjustment is located on the side of the chassis below the R.F. coil and oscillator tube. The adjustment should be made at the low end of the scale. If the volume control shaft should become grounded to the chassis, then no control will be obtained. Loosening the mounting nut and resetting the insulating fiber washer will correct this condition.

A great deal of the fading experienced with most electric receivers is due to faulty tubes, generally of the screen-grid heater type. With the use of the ordinary plug-in set analyzer, it is very difficult to detect a fading tube unless much time is spent. Only in rare cases, will the Service Man have the fortune of locating the offending tube while on the job only a few minutes. However, the possession of an A.C. tube tester will prove of invaluable assistance in determining the tube at fault in only a few moments. Of course, every man has his own methods and ideas upon the subject of testing tubes, but the following material has been subjected to innumerable tests.

The tube tester is plugged into the alternating current supply and placed in close proximity to the set, which has been turned or switched "on." The heated tube is placed into the tester and the control grid cap clipped into place. *At once,* the tube should be tested by pressing the proper buttons. If the tube is good it will pass the required milliampere reading and continue to hold that reading as the buttons are kept down. A bad tube will soon cause the meter needle to fall back, sometimes slowly and gradually and at other times in jumps of several milliamperes. After testing the tube, and the meter does not fall more than one milliampere in the 90 second test, it is almost a certainty that the tube under test is good.

However, the test is not yet completed. After all tubes have been tested and good ones replaced in the receiver which is put in operating condition, each tube should be given several successive sharp taps in order to determine the possible existence of loose elements. Many of these "loose element" tubes have been found which check perfectly on a tube checker or analyzer, yet cause the set to fade and sometimes become inoperative upon vibration. The addition of one of these compact A.C. tube checkers is highly recommended as a valuable adjunct to any service kit.

On Radiola "48" and Victor "14" receivers, the conditions may be met where one of the '45 amplifiers is ineffective, or where the removal of one '45 tube will clear up an otherwise muffled and distorted reproduction. These sets employ a modified audio design, different than those usually met in standard commercial receivers. A tapped high impedance audio choke acting as an auto transformer, and coupling condensers are utilized to more effectively couple the '24 detector to the '45 tubes in push-pull. In addition, two leaks, each 430,000 ohms, secure the necessary grid bias for proper operation of the '45 power amplifiers. Should one of the .025-mf. coupling condensers short, a very high plate current reading will be obtained on the '45 tube, with consequent distortion and poor quality. Likewise, if one of the 430,000 ohm leaks should open, the same effect will ensue. Most often, however, these coupling condensers open circuit, causing one '45 tube to become inoperative. When one of the leaks opens, repair is easily effected, for these carbon resistors are readily accessible.

A defective coupling condenser either shorted or open-circuited presents quite another problem, for these units are incorporated in the so-called (RCA) capacitor and coupling reactor pack. It stands without question, that the complete reactor pack can be changed, but this is unnecessary, though many of these units, most likely, have already been replaced. The only changes necessary are the addition of the new .025-mf. condenser to the grid circuit of the '45 stage containing the shorted condenser.

Two green wires emerge from the capacitor reactor block that go to the grids of the '45 tubes, as shown in Fig. 2. Place the new unit in series with the lead which comes from the defective unit (shorted) and that job is done. However, when either of the two coupling condensers open-circuits, the change is slightly more complicated. Here we must determine which of the two in the pack or block is open. This can be done by the discharge method, testing from one grid of the '45 to terminal No. 5 on the block, or the lump of solder located in one corner of the block between terminals Nos. 3 and 4. The new unit should be connected in series between No. 5 and the grid of one '45, or in series with the lump of solder to the grid of the other '45.

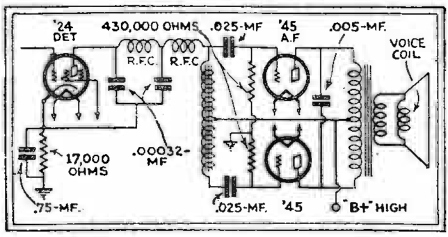

Fig. 2
Connections in RCA capacitor and reactor packs.

Distortion on Radiolas "80," "82" and "86" will be found in some cases to be caused by an open 60,000 ohm carbon resistance in series with the push-pull input secondary return. Almost all resistors used in Radiola and Victor sets use Wood's metal ends. When the proper value for a repair is not at hand, a temporary and usually a permanent job can be had by sweating the Wood's metal ends with the tip of a hot electric soldering iron. However, care should be exercised in applying the iron, for Wood's metal has a very low fusing point. The "open" usually occurs at the end of the resistor and sweating often does the trick of repair.

The same trouble found on several Peerless Couriers caused much aggravation to several Service Men. The receiver burned out the '80 rectifier as soon as the set was turned on. A dead short was found across the filter output. Each condenser was disconnected and given a charge-discharge test and each checked perfectly. After several hours of work, it was found that the condenser with the yellow lead emerging from the condenser block broke down under load. This same condenser was found to act the same way on several receivers.

For at least six months, Service Men were perplexed by the problem of fading in the Kennedy "632," in which volume would cut down to an audible whisper and, after a few moments, come back to normal before a test could be made to determine the cause. Several of these chasses were taken into the shop to undergo a "life test," and as soon as a set became inoperative, tests were made.

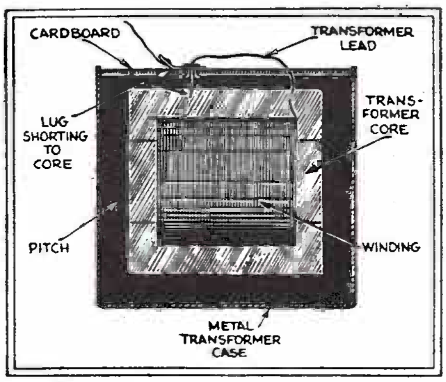

Fig. 3
Majestic "90" power transformer occasionally ground as shown.

For instance, in one case, the detector plate voltage was found almost nil, accompanied by an increase in other voltages. This was traced to a partial short in the detector's plate filter, (a combination which consisted of an R.F. choke and condenser assembly, similar to that used in the Stromberg-Carlson "641," "642," "652") one condenser being the apparent cause of the trouble; pressure on the sides of the case would clear the short, or bring it back. Instead of discarding the unit, the metal case of which was grounded, it was carefully taped and insulated, and external 002-mf. condensers were connected from either side of the choke to chassis.

In another case, the .06-mf. blocking condenser was found to open and close the circuit, causing fading; the remedy in this case was replacement. If a tone lower in pitch is more pleasing to the owner, a 0.1-mf. condenser may be substituted for the .06-mf.

This model incorporates a certain type of Jensen speaker, in which the voice coil is wound with a wire resembling aluminum; the flexible pigtails cannot be soldered, so the connection is obtained through a heavily-compressed mechanical contact. Vibration, loosening the contact, produces an open coil and fading, then sudden recovery. When the fact, that all voltages were correct and receiver parts in good order, pointed to a faulty speaker, this was replaced with another Jensen instrument of nearly the same characteristics.

Phono - Radio

THE increasing popularity of radio-phonograph combinations has tended to broaden the scope of radio Service Men. The new field opened up by the advent of radio-phono combinations, and home "Talkie" outfits has made it necessary for every man to have a closer working knowledge of the principles of electricity and sound. A wide acquaintance with audio amplifiers is no longer amiss in the servicing of these new outfits.

Perhaps the very first point that should be well known is the fact that distortion in record reproduction is not always caused by defective audio amplifiers or dynamic reproducers. A most usual cause of this complaint is improper speed of the turntable. Most Service Men know that the speed of the turntable should be seventy-eight revolutions per minute. For speed adjustment, some outfits supply a stroboscope, but the most common method is to insert a two-inch strip of paper about one inch between the record and turntable. *With the record playing* (pickup in position), the revolutions should be checked with a watch. When the speed is slow, more distortion results than when the rate is fast. However, for perfect reproduction, it is necessary that the phono speed be exact or as nearly so as possible.

In the centering of the armature of any magnetic pickup, *it is extremely important that the magnet be kept in contact with the pole pieces or some other piece of iron or steel,* should the magnet be removed for the necessary adjustment of the pickup. If the magnet is kept free for only a few moments, it is enough to impair and sometimes ruin the permeability and the effectiveness of the magnet as a pickup device. It is very simple to slide the magnet, keeping it engaged with the pole pieces, for ease in adjusting the armature. A weak magnet will cause weak volume and distortion.

Most pickups employ a strip of soft rubber as a centering device for the armature and also as a damper for too rapid vibration of the armature. When the pickup is kept inactive for some length of time, the rubber strip will harden and throw the armature off to one side, no matter how many times, an adjustment is made. The remedy in this case, is replacement of the rubber damper. A good phonograph record to use in testing the low frequency response of a magnetic pickup is Victor record No. 21121, which has notes below 60 cycles recorded on it.

Radiola Model "48"

When employing a magnetic pickup with the Radiola "48" receiver and similar Victor models, it is best to use a pickup with an input transformer coupled to the proper terminals on the terminal strip of the receiver. It occasionally happens, however, that an annoying hum will result while a record is being reproduced. This condition can be eliminated by shunting a 5000-ohm resistor across the phono input-transformer secondary.

In the new RCA phono-radio combination, records other than Victor will not operate the automatic record-changing device, due to the difference in record-rejecting grooves. The Victor records have an eccentric groove, while others have concentric grooves. However, provision for these other records has already been made.

By the addition of a new part, which can be obtained from the distributor, any record can be made to operate the record-changing device. The trip-arm that operates the stop switch should be removed from the mechanism. On this part will be found two holes already drilled to take the machine screws that hold the new part on the trip-arm. This part is slotted so that an adjustment can easily be made by sliding to the proper position. The two screws pass through the slot, through the drilled holes, and screw into the threaded strip that is supplied. The screws should not be firmly tightened until the trip-arm has been fastened into place. The part should be set, so that the stop switch operates at the proper time. The machine screws should then be tightened.

Brunswicks

The Brunswick Automatic phono-radio combination met with wide favor because of its low price and comparative simplicity. Certain precautions must be taken for proper installation and operation. The outfit is a heavy one but it is important that the cabinet stand on a level floor. Should the cabinet be tilted, the pickup arm will swing too far and start from a quarter to one-half inch from the beginning of the record. The loading compartment holds twenty records, and care should be taken that the records should not exceed that number and that each record be straight.

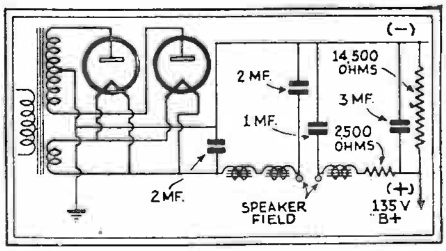

Fig. 1

Diagram of the Sonora model "A44" power unit. An open bleeder will increase all voltages.

A warped record will jam the mechanism and perhaps seriously injure its operation. The common troubles on model "42" are but few and much need not be said of them. Sometimes, after the mechanism has been started, the records start rejecting continuously. This condition is a usual sign of a jammed solenoid plunger. To straighten this trouble, it will be necessary to loosen the two screws holding the solenoid to the iron frame and re-center the solenoid to free the action of the plunger. On some occasions, the motor will operate but the changing mechanism does not. Here, the solenoid should be tested. Usually, in the latter symptom, the solenoid will be found burnt out.

When the motor stops after a few revolutions after the starting button has been pressed, look to the cycle switch beneath the gears.

This switch will cause the above complaint by failing to make proper contact. However, a shorted cycle switch will cause the condition where operation of the off-on switch will fail to stop the motor. Should the motor stall or lose power while changing records, it would be wise to clean the motor commutator with very fine sandpaper. These observations are the result of actual service and no trouble has been mentioned that has been found to happen only once.

Replacement procedure and explanation has not been attempted, for every Service Man can secure a copy of a manual describing fully the parts and operation and replacement of the mechanism.

Sonora Model "A44"

Recently, a Sonora model "A44," the schematic diagram of which appears in Fig. 1, caused a bit of annoyance. Upon the first service call, all the '27 tubes were found weak. The set appeared in all other respects to be in good order. A new set of tubes was placed into the set and it functioned as well as ever. About two weeks later, the same complaint of weak reception was received. Another call disclosed all the '27 tubes weak. The second Service Man did not know of the first report and suggested replacement of all the '27 tubes. This set uses six of these tubes. Upon being informed that the tubes were purchased only two weeks previously, a check was made on the receiver.

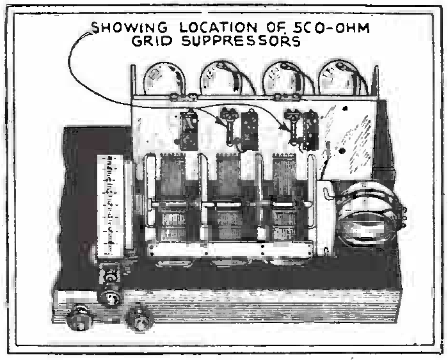

Fig. 2

Chassis layout of the Kolster K20 series showing the location of the grid suppressors.

The filament voltage was correct but the voltage impressed upon the plate of the '27's was about 350 volts. No doubt, this excessive voltage paralyzed the tubes. Even the detector tube which had about 225 volts on the plate was very weak and barely drew any plate current. The Service Man immediately checked a schematic circuit of the receiver to ascertain which portion of the set would be most likely at fault.

A glance at a diagram will disclose a resistor which acts as a bleeder and cuts the high voltage down to .135 volts for the R.F. and A.F. amplifier '27 tubes. This resistor should have had a resistance of 14,500 ohms but upon test showed a resistance of 25,000 ohms. Replacement was made with a 50-watt 15,000-ohm unit and the proper voltage was obtained. The tubes were replaced for the customer without charge and the job was done.

Kolster Models "K20," "K21," "K22," "K24," etc.

In the repair of Kolster "K20," "K21," "K22," "K24," etc., receivers, it is most important that grid suppressors of the same size be substituted for those that have burnt out. Failure to do this, especially when the replacement is of a lower value than the original resistor, will throw the set out of balance. To eliminate oscillation, the size of the grid suppressors should be increased. Too great a value will impair the sensitivity of the receiver and should be guarded against. The location of the grid suppressors is shown in Fig. 2.

Fada Model "43"

On several Fada "43" receivers, the condition of undue oscillation and distortion was reported. Analyzer socket tests showed no abnormal condition, so a series of tests was carried on to determine in what part of the circuit lay the cause for this complaint. As the oscillation generally ran hand in hand with distortion in these sets, it was conceded that the reason for the former complaint was the same as for the latter. This is fairly obvious.

A magnetic pickup was coupled to the grid of the first audio 227 and record reproduction attempted, which proved to be free

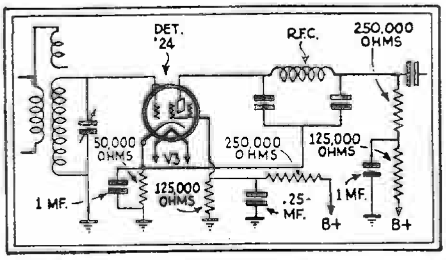

Fig. 3

Detail schematic of the Fada "43" detector unit. An open chassis-to-screen resistor caused distortion.

from any distortion. The same pickup was coupled to the detector 224 and again the amplifier used to reproduce the record. Here, however, noticeable distortion resulted. The detector circuit was checked and after close inspection, it was found that the gray carbon resistor connected from screen to chassis was not 125,000 ohms as listed on the circuit schematic, shown in Fig. 3, but was close to ¼ meg. When substitution was made with the proper size, proper reception and reproduction was had.

Rather peculiar about the whole affair was that detector screen-voltage was not decreased any noticeable amount when the lower value resistor was put in. However, lack of the proper resistor resulted in general detector unbalance.

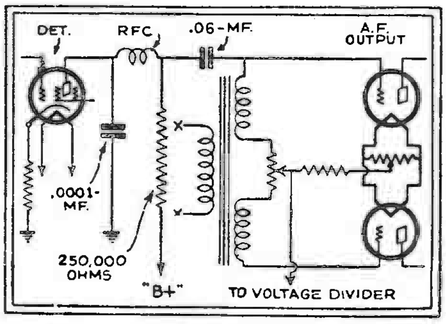

Fig. 3

Determining faulty transformers by using the circuit as an impedance-coupled stage.

Further Notes

During the past season, a great number of new radio receivers made their appearance. Almost every reputable manufacturer released at least one receiver employing the superheterodyne circuit, variable-mu and pentode tubes, tone control and automatic volume-control. Although these advanced features resulted in far better radio receivers, their use brought their attendant difficulties. On the other hand, many problems have arisen because of certain common failures of component parts.

Colonial Model 47

In the Colonial Model 47, a superheterodyne receiver, the condition of unstable operation accompanied with the complaint of poor tone at moderate volume has been found to be caused by the misplacement of the screen-grid tubes. Three variable-mu type '35 tubes are used in this receiver as well as one type '24 as a second-detector. When a '35 is placed in the second-detector stage, the above complaint will ensue. This tube will not function properly as a detector in a T.R.F. receiver, or second-detector in a superheterodyne, because of its electrical characteristics. The socket arrangement of the Colonial 47 is illustrated in Fig. 1.

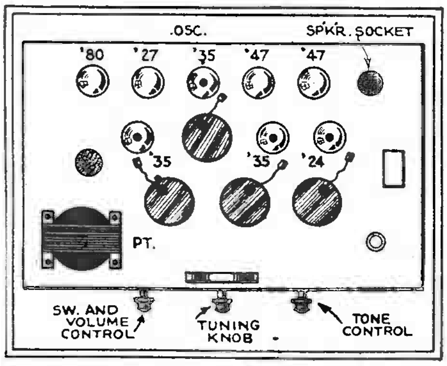

Fig. 1

Socket arrangement of the Colonial 47 receiver. Three variable-mu tubes are used.

Reception on this model is often marred by hum, slight in some cases, and in others quite disturbing. This condition is not caused by any defective part. Its presence can only be attributable to poor mechanical design, resulting in interstage coupling.

Stromberg-Carlson Models 25, 26

Some time ago, an interesting problem was presented by a Stromberg-Carlson Model 25, 26 receiver. The complaint was "intermittent reception." After the set had been in use for a few minutes, it would suddenly go "dead." When the line switch was snapped off and then on again, reception would be resumed. On other occasions, the receiver would stop and start up again without anyone having disturbed it in the least. A thorough check disclosed a lack of plate voltage on the screen-grid detector. The chassis was taken down in an attempt to locate the trouble.

The primary of the input push-pull audio transformer was tested but this winding proved O. K. (Besides, if the primary had been open, a voltage reading would have been obtained at the detector plate, because of the 250,000-ohm carbon resistor shunted across the winding as a loading device, since the plate impedance of the screen-grid tube as a detector is high.) The 40,000-ohm carbon resistor used to reduce the high voltage to that required by the detector, was suspected, but this also proved correct when a resistance measurement was made.

A "short" test made from detector plate to chassis produced only a very high resistance effect, apparently pointing to no trouble on this point. With the receiver turned on, voltage measurements were made from the "B+" side of the primary. This showed 20 volts, but the reading obtained from the high "B+" terminal of the voltage divider, compared with that on the voltage chart for this receiver, showed a discrepancy of about 40 volts. The 40,000-ohm detector series-resistor was unsoldered from the lug on the condenser block and the voltage jumped to slightly above normal.

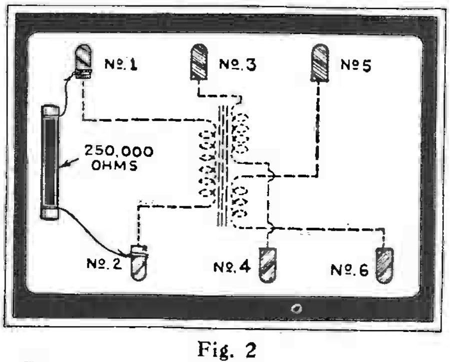

Fig. 2

The primary of the transformer shorted to ground under load, causing poor reception.

This lead to the conclusion that some part of the detector-plate circuit was shorting to the chassis or "B—," even though the "short" test did not indicate the defect. The resistor was replaced and the lead to the "B+" terminal of the input transformer, marked No. 1 in Fig. 2, was disconnected. The correct voltage was obtained at the wire; but as soon as it was placed back on the terminal, the voltage dropped to 20. These results pointed either to a shorting primary, or a leaky or otherwise faulty by-pass condenser (.0001-mf.) located within the R.F. choke housing.

To determine the guilty member, the lead from terminal No. 2 on the transformer was removed and the voltage found at this terminal was zero. To further check the unit, the primary was entirely disconnected, but the 250,000-ohm shunt resistor was left in the circuit. Although the required 200 volts was not impressed on the detector plate, a sufficient reading was obtained to warrant the assumption that the primary of the transformer shorted to either the core or the casing, in some way, *under load.* Similar failures in subsequent receivers of the same model were easily detected and a repair speedily effected by replacement of the transformer.

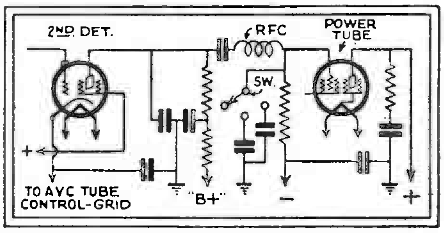

Fig. 4

The detector circuit showing the location of the RFC which caused trouble.

Many cases of noisy reception have been reported on the Stromberg-Carlson Models 25, 26. In most instances, the trouble has been traced to a noisy primary of the push-pull input A.F. transformer. This condition will evidence itself even with the detector tube removed. It seems that the unusually large primary winding, so made to match the high impedance of the screen-grid detector plate, has resulted in many breakdowns. Perhaps the best method for determining positively whether the primary is at fault is to disconnect the primary and use the 250,000-ohm shunt resistor in conjunction with a .06- or .1-mf. condenser connected as shown in Fig. 3. It is not advisable that this procedure be used as a permanent repair as the quality of reproduction will suffer considerably.

A frequent cause for an inoperative Stromberg-Carlson Model 25, 26 lies with the bolt that protrudes from the chassis, which bites into a section of the voltage divider. This bolt should be cut down or replaced with one that is shorter.

Atwater Kent Models 83, 85

Often, the complaint of poor tone, low volume, and little response when the tone control is set for bass reproduction, is received on the Atwater Kent Models 83 and 85. After a great deal of testing and checking, *made more difficult by the fact that the schematic diagrams were unavailable* (these circuits appear in the "OFFICIAL RADIO SERVICE MANUAL, VOL. II."—*Tech. Ed.*), the trouble was finally traced to an open choke in the pentode control-grid circuit. (This choke connects to one of the leads from the tone-control switch.) What role this choke plays is difficult to state for, when it was shorted out, the receiver performed as it had never done before. This portion of the Models 83 and 85 is illustrated in Fig. 4.

The alignment condensers of these two receivers are located on top of the coils, beneath the coil shields, and to attempt an adjustment of them would necessitate removal of the shields, a procedure that does not make for accuracy. As the shield cans are all of the same size, a duplicate may be secured for service purposes with several holes drilled in the top to permit the insertion of the adjusting screw-driver. When alignment is necessary, this shield can is to be substituted for the one ordinarily used.

Operating Methods for Service Men

ANOTHER Monday and it's starting off as usual with lots of service orders. I used to wonder why Monday was always a busy day with the radiotrician but I think it is easily explained by the fact that people have more time at home on Sunday and consequently notice the shortcomings of their radio.

Well, let's see if the tool bag and collection of gadgets are all here. Yes, everything is shipshape and the much-abused (but also much-used) test set is O.K. and ready to help me "Read 'em and Weep."

Brunswick "15"

Here's the first order; "Service Brunswick 15—cuts off." An early-morning "massage" on the owner's doorbell and the maid lets me in with the remark, "The radio is playing alright now but it cuts off sometimes." That information isn't very helpful, for a great many things could cause that trouble, but I begin a quiz of the maid.

You know, servicing radios is a bit of "Sherlock Holmes" stuff in analysis and deduction, and a chance remark of the set operator may be a clue that leads directly to the trouble which otherwise might take lots of valuable time to locate. This is a typical case for, in answer to one of my questions, the maid volunteers the information "that we make it come back on by wiggling the big tubes in their sockets."

"Ah!" I say, "That's simple." For previous experience has taught me a trick about that complaint. Plugging in my soldering iron, I remove the chassis. The detector is resistance coupled to a pair of parallel '45's. In this circuit, there is a detector-plate resistor that apparently has no coupling condenser to the parallel grids of the power tubes, but there is where the trick comes in. The coupling condenser is concealed under the fiber mounting-panel and the lead from this condenser is brought through this fiber and the end of the lead connected and hidden by a drop of solder on the plate-resistor soldering lug. Enough heat to make the solder at this junction run will remedy a bad connection and eliminate the complaint of "cutting off." In fact, I always heat this joint when working on the Brunswick 15 or 22 chassis.

Radiola "60"

And the next order reads, "RCA 60—lost its pep." As I hustle across the lawn in the early morning sunshine, I shoot an eager eye over the antenna installation. It is a clean-cut job and doesn't give any signs of trouble there. The owner is at home and points out that the set is dead until the volume is advanced all the way, and then it plays weakly.

A check of the tubes on an A.C. checker shows them to be normal. Plugging in the analyzer, I find low plate-voltage all over and the "M.A. test" in the plate circuit of each tube causes the needle to barely wiggle. A certain sign of something wrong in the voltage-distribution system. I suggest taking the set to the shop for careful analysis.

Later, at the shop, after failing to find a short in the filter or bypass condensers, I measure all resistors and check these readings with the values given in the schematic. The big, black, carbon resistor (bleeder) is supposed to be 20,000 ohms but tests only 3,000 ohms.

Replacement of this resistor with a high-wattage, wire-wound resistor of correct value secures a miraculous return to "peppy" performance in this set, and the customer is delighted with the small repair bill, as he has learned to dread power-pack repairs as expensive.

Next order says, "Owner refuses to pay for radio until fixed, complains of peculiar vibration or distortion on voice. You are fourth Service Man to be sent. FIX IT. Brunswick S31." Now that sounds bad. I find the owner at home and "sore as a boil" on the subject. He says, "You're the fourth man out here—hope you surprise me by really doing something."

I ask this man questions until he seems annoyed so I say, "Mr. X, I hope you will permit me to ask questions because I am earnestly trying to get to the bottom of this trouble and remedy it. And you know," I added, "my Company wants to please you and, besides, it will be to my credit to fix it. So please don't take the attitude that we are too dumb to realize that your satisfaction is of paramount importance."

He looks at me peculiarly and says, "I believe you *do* want to fix the darn thing, but all the other guys sent out here seem to think I'm unreasonable and a bit nutty." I laugh heartily and he manages to put on a weak smile, the first sign of good humor he has shown. Then and only then do I turn on the set.

I notice a slight rattle of the speaker cone but say nothing as I want this man to tell me what he hears. But he seems not to notice this. Then I switch to "distance" on the L-D switch (although we are tuned to a local station) and reduce the volume control. Instantly there is real distortion.

"That's it," the customer says excitedly, "hear it?" Then I explain that the set overloads and distorts when the signal input is too great, as it is with the switch on "distance" and the set tuned to a local. He instantly takes the attitude that I have proved him in the wrong and he emphatically denies using the switch incorrectly. Furthermore he gets sore again.

So I see that I have to "kid him along" some more. He is just dying to see someone plunge into the insides of that set so I decide to satisfy him at any cost. Suddenly, I say, "By Jove! I hear it now. That's the voice coil of the speaker rubbing the field magnet." And I proceed to rip loose wires, loosen bolts, screws, etc. He watches with fascinated interest as I show him how I center the voice-coil spider.

After I reassemble it, he says it sounds fine and is genuinely pleased. But I know (and I expect he realizes it, too) that when he turns his switch on "distance" and tunes in a local, he will hear his trouble again. But he hasn't complained again and he won't complain again. He'll be ashamed to. The boss complimented me on fixing this instrument—but I think it was a case of "fixing" the customer.

The next few calls are new sets that have failed because of bad tubes. I fix these in short order, but am careful to explain to the new owner in each instance that one or more tubes out of a new set are likely to prove defective in a few days, and that this does not mean that the radio is "burning out tubes too fast."

Crosley Showbox

And now here's a "pain in the neck." "Crosley Showbox you serviced yesterday still cuts off—complaint on your work—no charge." How I hate to see an order like that! Makes me want to crawl in a small hole and pull it in after me. The Boss always thinks the worst (carelessness on the Service Man's part) on such a call-back, and it mortifies me every time, although I know it's impossible to have a perfect batting average on radio service.

The day before, I had replaced an erratic '27 tube in this set and thought I had cured the complaint of cutting off. I take this set to the shop and flounder around some time on the wrong track. A thorough check shows no defective resistors, condensers, tubes, or bad connections until suddenly I discover a bad speaker-cable where the field-supply wires are shorted onto the output of the set (Dynacone speaker). I replace this cable and the set plays beautifully in the shop for hours.

Next day, before taking it back to the owner, I turn it on for final test—and it cuts off! While debating whether to smash it with a sledge hammer or throw it out the window, a bright idea comes to me. Examination shows that the tension spring on the rotor shaft of the tuning condenser is adjusted by a collar and set screw on the back of the shaft. Shaking the rotor shaft causes the set to cut off. I loosen this collar, clean the contact points, and then force the collar back against the tension spring and tighten the set screw. Then a drop of Nujol on the contact bearing, and the Crosley stays fixed this time.

More Notes

Sparton 210

I HAVE caught up with all outside jobs, but have plenty to do in the shop. The first machine to draw my attention was a Model 210 Sparton Midget, which performed well until it had heated thoroughly, and then it broke into oscillation. The usual check of voltages and a new set of tubes failed to show anything wrong. I then checked the resistor values with the set "cold" and also after it had thoroughly heated. Frequently resistors change values considerably after heating, and the voltage rises surprisingly. However, this set uses wire wound resistors of good quality that did not change appreciably.

Finally I checked the bypass condensers for open circuit, but they all gave a deflection on a D.C. meter. Then I began to add more capacity to the various points. The oscillation stopped immediately when a tenth microfarad condenser was placed so as to bypass the cathode bias resistor to ground. Although there was already a condenser in this position, evidently it was not quite sufficient and the set would break into oscillation on strong signals.

This experience taught me the value of having some method of measuring capacity so I determined to calibrate my A.C. voltmeter (Jewel pattern 199) for values commonly used in filter and bypass condensers. I measured the line voltage first and found it to be 118 volts. Then I took a number of condensers of known value and read the voltage with a condenser in series with the meter. The following values were obtained:

4 mf.	115 volts
3 mf.	112 volts
2 mf.	106 volts
1.5 mf.	98 volts
1.0 mf.	85 volts
.5 mf.	50 volts
.25 mf.	30 volts
.1 mf.	10 volts

These values were plotted on graph paper and the curve drawn with the aid of a French curve. (Both the graph paper and the French curve can be obtained at most five-and-ten stores). See Fig. 1.

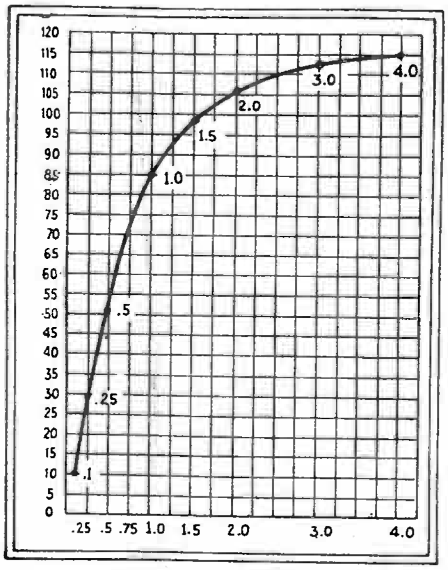

Fig. 1

Calibration curve of the A.C. voltmeter used in the Jewell 199 set tester for capacity measurements.

In the future when I have a set that is erratic and oscillates at irregular intervals, the first thing I shall check will be the bypass condenser values. (R.F. bias resistors and plate leads should have capacity bypasses of .1- to .25-mf. and screen-grid leads .5- to 2 mf.).

Majestic 20

The next set needing attention was a Model 20 Majestic. This set had a short in the plate circuit of the R.F. end. By the process of elimination this short was found in the second I.F. transformer. This transformer may be removed and replaced without taking off the bottom of this set entirely, which saves quite a bit of time, as much of the power pack, etc., is fastened to the bottom plate of the chassis. Simply remove the end section near this transformer and loosen the drive screws in the bottom section so that it may be pulled open a little. Take out the two screws holding the transformer and unsolder the four leads.

Invariably I have traced the short in this unit to the .1-mf. condenser bypassing the plate lead. To repair this unit cut the rivets holding the I.F. unit in the metal can and pull the leads out of the holes in the can. Carefully warm this can until the wax softens; then the assembly may be lifted out. The shorted condenser can then be cut out and a midget type bypass put in its place or it may be left out of the can and a larger size condenser put outside the can and under the chassis. Then the set is aligned with a 175 kc. oscillator.

Clarion Midget Model 40

The third number coming up for attention was a Clarion Model 40 Midget. This set behaved erratically when the volume control was moved. (Since then I have had several of this model with bad volume controls and they all seem to be affected differently according to what defect was in this unit. Hence it is well to check this unit when servicing this model.) This control is rated at 4,100 ohms and is used as a part of the voltage divider. The potentiometer arm is used to vary the bias on the grids of the variable-mu tubes. In substituting here it is well to use a value of resistance as close as possible to the value mentioned, but 5,000 ohms can be used. I found it a good idea to put a small resistor (100-200 ohms) between this unit and ground so that the voltage applied to the grids never goes to zero. See Fig. 2.

Audiola Jr.

The next "pain in the neck," was caused by an Audiola Jr. which failed to function at all. The circuit in this set is the prize puzzler of the past season, namely, direct-coupled. The resistors in this set have given me plenty of trouble and the first thing to check in this model is these resistors. In Fig. 3 a pictorial drawing shows the location of the different resistors and their value. In different sets I have found defective resistors of each value, but the one that goes bad most frequently is the 400-ohm section on the black unit. Notice the 50,000 ohm tap (green) used as a series resistor for the R.F. screens. I have cured several complaints of the set "having no pep and no volume" by cutting this resistor out and substituting one of lower value, thereby raising the screen-grid voltage.

Apex Midget

The last one on the bench is an Apex midget of the 26P series. Many complaints have been registered by customers about the volume control "jumping" from loud to soft or vice-versa. I determined to locate this trouble and brought this set to the shop for that purpose. All tests and visual examination show these units in good shape but they do justify a complaint that their regulation of volume is not smooth. So with a strong magnifying glass and a strong light on the unit I proceeded to play the set and watch what happened. Suddenly I found the explanation!

This volume control was wire-wound with a spring slider that made contact on the inside of the resistance circle. The magnifying glass showed that as the slider pushed around the resistance strip the turns of wire were loose and the slider pushed a number of turns together. This continual movement had worn out the enamel insulation between turns and the result was that as the slider pushed around it forced a number of turns together and shorted out an appreciably large amount of resistance suddenly. Replacement of this type with one having a carbon strip and smooth acting contact relieved this complaint. This volume control is rated at 8,000 ohms.

So finished a typical day in the shop.

ZENITH MODEL 52

THE writer was recently confronted with the problem of removing hum from a Zenith Model 52 radio. After checking the set over, it was decided that the cause of the trouble was in the electrolytic filter condenser. With the set turned on, each terminal of the condenser was momentarily shorted to the chassis by means of a metal screw driver. This procedure completely removed the hum. The same method was tried on sets of various other makes, with great success.

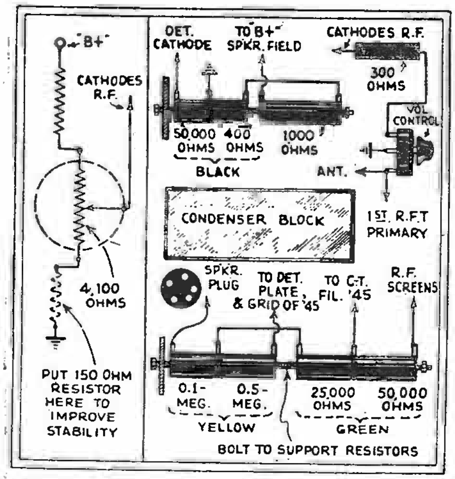

Fig. 2, left. *Diagram showing location of additional 150 ohm resistor.*

Fig. 3, right. *Diagram showing the location of the resistors in the Audiola Jr. receiver.*

SERVICING RCA-VICTOR'S

ALMOST every commercial receiver that has made its appearance recently has utilized the now very popular superheterodyne circuit. In discussing the common troubles and failures of some of the current models it will appear that, except in few instances, such defects have not been characteristic of the circuit, but on the other hand, may be traced to open-circuits, shorts, defective resistors and the like.

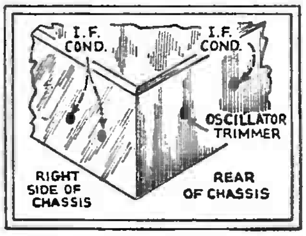

Fig. 5

Location of the trimmers in the Bosch 35 receiver.

RCA-Victor Radiola Models

A large number of RCA-Victor model R-11 receivers have been sold. In this model there have been two major causes for complaints; among others, that of fading, and very weak and distorted reception. Upon examination it will be found that when the set is switched "on," the receiver will function normally for a few minutes, after which it will slowly fade, at the same time becoming distorted. Should the set be turned off and then on, it will operate normally again for only a few minutes, when the same condition will result.

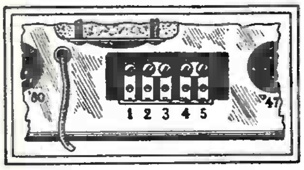

Fig. 3

Sketch showing the location of the terminal block.

This set employs an automatic volume-control tube, making necessary the use of a number of resistors of high value which, therefore, are very difficult to check with ordinary instruments at the disposal of the Service Man. Usually a faulty 5-megohm carbon leak in the A.V.C. circuit will be found as the cause of the fading. One of the pigtails of the resistor is connected to the grid terminal of the A.V.C. tube. Repair is effected only by replacement. The value of the unit has not proved to be critical, either a three or four megohm carbon resistor serving satisfactorily.

If a careful analysis is made of the schematic of this receiver, it will be noticed that the primary and secondary of the second I.F. transformer are electrically shielded from each other. The only means of energy transfer is secured by a third, smaller, "coupling" winding, inductively coupled to the primary, but directly connected to the secondary. As shown in Fig. 2, the amount of energy transfer depends upon the setting of the volume control, which shunts this coupling coil. When the coil open-circuits the condition of very weak distorted reproduction will be noted. Since the use of an analyzer will not disclose the defect, a continuity tester or ohmmeter must be resorted to. Remove the volume - control leads, or an erroneous result (or reading) will be obtained. In most instances, the open will be founa in the pigtail of the coil, which may easily be repaired.

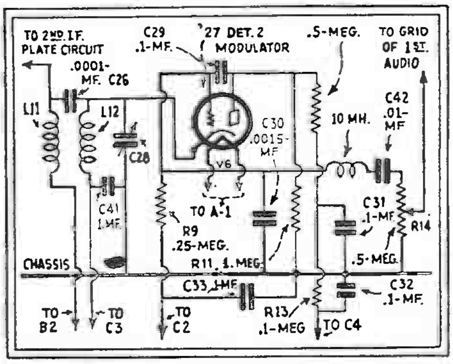

Fig. 4

Detail schematic of the Stromberg-Carlson model 22 second I.F. and detector stages.

Many of the RCA-Victor models R-50,R-55. and the more recent

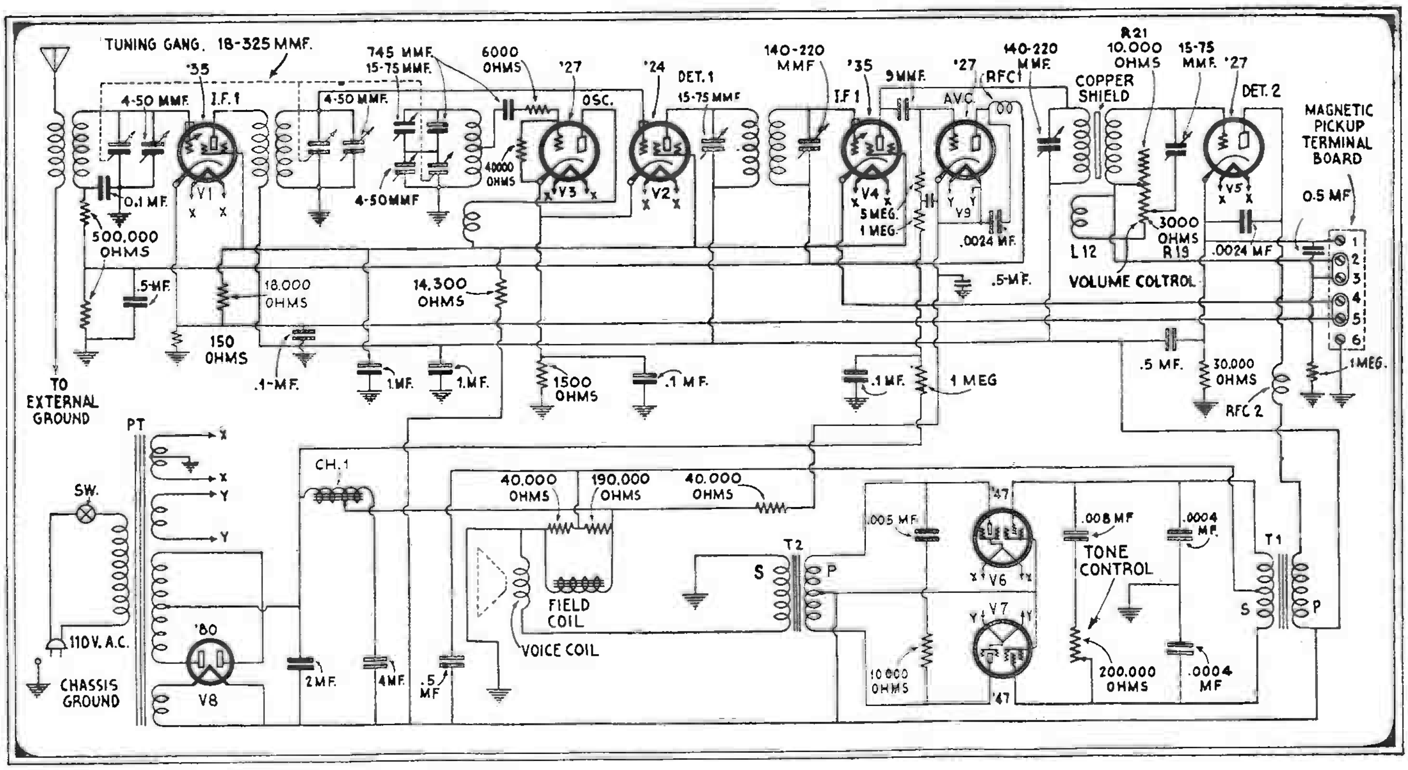

Fig. 2

Complete schematic circuit of the RCA-Victor R11 receiver. The transformer to the right of V9 has its primary and secondary shielded—coupling being effected via the coupling-coil L12.

model 99X, have given trouble owing to intermittent or no reception. Although the complaint has all the symptoms of an open voice coil, removing and re-inserting one or both of the pentodes will produce no click in the dynamic speaker. These chasses have a five-terminal strip, illustrated in Fig. 3, located in the rear of S.P.U., behind the reproducer. Due to vibration or other causes, the screws holding the connecting link across terminals 4 and 5 become loosened, which opens the voice-coil circuit causing the above complaint.

Another model, namely the 68 manufactured by the same company, presents a number of difficulties. This receiver is a radio-phono combination, with remote tuning. The remote control unit which is located in the front of the chassis is enclosed in a shield to service, which requires complete removal of the chassis. The most common troubles of the remote-control unit lie in the "off-on" switching mechanism, which is a relay composed of two coils, an armature and two contacts. The complaint will be that the set cannot be turned "on" or that it cannot be turned "off."

Normally, when the "on" button is pressed, the armature of the relay snaps to the right and engages two copper contacts, thereby closing the primary circuit. Due to the heavy current drain of the receiver, especially when the phonograph has been in operation, the arc (created by the engagement of the armature and the contacts) soon corrodes or burns away the ends of one or both of the contacts, *preventing the set from being switched "on."* On other occasions, the arc will cause the armature to spot-weld to the contacts, resulting in a condition where *the receiver cannot be switched "off."*

In some cases, where the contacts have not been burnt away and are only corroded and blackened, it is possible to clean the contacts with some very fine sandpaper or a magneto file; but in the majority of instances it will be necessary to replace the contacts.

Whenever this remote-control unit is serviced because of the foregoing failure, it is wise to connect across the two contacts a one or two mf. condenser, capable of working continuously at about 150 volts A.C., to absorb most of the arc when the switching takes place, thus avoiding future troubles.

Another service call concerning this model set may be a request to increase the length of the remote-tuning-unit cable, where the owner desires the unit placed at some distance from the receiver. The cables furnished for this extension work are obtainable in different lengths and are similar to those already used except in one detail. The terminals fanned out at one end of the extension cable *may not correspond to the fanned terminals at the other end.* In other words, right-side terminal No. 1, at one end, may be right side terminal No. 5, at the other. Every cable should be checked with some continuity device and marked before installation.

The pilot light used in the remote tuning unit is a miniature 2½V. bulb. When any of the buttons are pressed, the glow should dim, due to the method of obtaining current for the bulb. However, should a 6 V. bulb be substituted, then instead of the light dimming, it will brighten considerably, when any of the buttons are pressed. This results in much shorter life.

The Kennedy 62

Only one serious complaint has shown up in the Kennedy 62 combination long- and short-wave receiver. When the tuning control of the broadcast receiver is rocked, or moved from one side to the other, or up and down, intermittent reception will result. The same defect that causes this complaint is also the reason for an inoperative receiver. The tuning condenser gang is mounted on rubber supports for obvious reasons. The lead soldered to the first stator section not being very flexible soon snaps off its connecting lug, because of the rocking of the gang, resulting in the two complaints. It will be necessary to remove the gang shield to remedy the cause of this trouble. To minimize the possibility of future reoccurrences, this lead may be removed and one that is more flexible installed.

Stromberg-Carlson 22

One of the new Stromberg-Carlson models, the superheterodyne 22, perplexed several Service Men, recently.

The receiver was inoperative. A thorough check revealed an entire lack of plate voltage at the second I.F. stage, with correspondingly lowered voltages on other tubes. The 1. mf. bypass condenser proved perfect. The ohmmeter indicated a resistance of over 10,000 ohms from the B+ side of the last I.F. intermediate primary, to chassis; at the plate side of the same winding it showed a reading of only about 1000 ohms. When the schematic was consulted and the circuit traced, it was found that the only possible source of trouble was in a shorted .0001-mf. mica condenser, coupling the plate of the second I.F. tube to the secondary of the last I.F. transformer or cathode of the second detector. This proved to be the situation when the suspected unit was tested. It is located at the base of the transformer within the shield, which is situated directly above the phonograph jack; its electrical connection in the circuit is shown in the detail illustration, Fig. 4.

The Bosch 31

In the Bosch 31 superheterodyne, the closely-coupled last I.F. transformer has been causing considerable annoyance. Here, as has been found with the untuned R.F. coils in previous Sparton models, the primary and secondary are wound together to obtain a high degree of coupling. The secondary is wound with cotton-covered enamel wire, while the primary has only the enamel for insulation. Break-down of the insulation at some point terminates in a shorted unit, which must be replaced. This condition will be known by properly checking the unit with all leads removed, but may be deduced from a lack of plate voltage not attributable to any other cause.

Fada Models

Several errors have been made by Service Men when aligning Fada Models 45, 48 and 49 superheterodynes. These have occurred due to the fact that the locations of the different trimmers have not been known. The I.F. in these models is 175 kc. The oscillator trimmer should be adjusted at 600 kc., the gang compensators, at 1400 kc. The four I.F. tuning condensers in the 48 and 49 models are located in the rear of the chassis; but the oscillator trimmer is found between the pentode '47 and the type '35 tubes within the main shield housing. In the 45 model, however, the trimmers are located as shown in the sketch, Fig. 5.

Sparton, Majestic and Zenith

Noisy reception on Sparton Model 591 receivers has definitely been traced, in many instances, to a faulty first A.F. transformer. This unit is situated under the chassis baseboard with the first A.F. tube, which is inverted. It is best to replace the transformer, although a repair may be made by discarding the transformer and coupling the first A.F. tube to the detector by means of resistance coupling.

Many receivers, such as Majestic and Zenith, but especially Sparton models employing the band-selector, develop noisy tuning. As the condenser gang is rotated and tuned from broadcast band to broadcast band, the noise is heard. Examination will not reveal shorting plates. Cleaning all rotor friction contacts sometimes helps. However, the main reason for this trouble is due to tiny particles that peel from the plates and short to one another.

To eliminate this condition, all leads to the condenser sections should be disconnected and a high voltage applied to each section in turn. This voltage should be as high as possible and may be obtained from the receiver itself. All tubes but the rectifier should be withdrawn to raise the voltage. With the voltage impressed on each section, the gang should be rotated. Arcing at the shorted points will burn the particles and effectuate an efficient repair.

PHILCO MODEL 112X

A FEW of the early production of the model 112X Philco receivers had an input transformer with the letter "A" after the part number on the terminal board. These transformers should have a .0008-mf. condenser connected across the entire secondary. Later production models have the input transformer without the letter "A." These should be equipped with a 49,000 ohm resistor across the secondary.

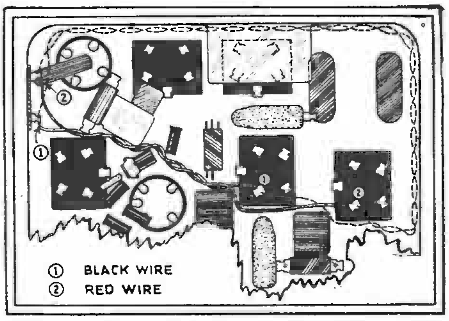

Fig. 4

Suggested changes in wiring of the Philco Model 112X.

On some of the first production model 112X receivers, the wires from the plates of the pentodes to the two lower terminals of the speaker socket in the chassis were wired as shown dotted in Fig. 4. This "dressing" tends to produce a high pitched whistle if the tubes are slightly unbalanced. This condition is readily eliminated, however, by changing the dressing of the wires as shown by the full lines in the same figure. All new production models are now wired in the same manner. If it is found necessary to make this change, be sure that the polarity of the wires after reconnection is the same as before. In present production, red and black wires are used, but in earlier models two red wires were used.

In some few cases in this model receiver, a slight whistle may be heard. This may be eliminated by moving the two plate wires away from the compensating condenser.

CROSLEY MODELS

IN most of the Crosley models, the various filament center-tap resistors are arranged in tiers. In damp weather these strips sometimes buckle, producing a short that causes a bad hum.

Many sets have the volume control connected as a potentiometer from B+ R.F. to ground. Carbon-strip resistors in this position soon become noisy. Only wire-wound resistors should be used.

Some sets have the chassis built in two parts. A faulty connection between these two parts will cause the set to stop operating.

When reproduction from phonograph pickups becomes bad, it is probable that the damping rubbers between the armature and the pole pieces have become hard. Replacing these with new rubber dampers will better the quality.

SERVICING THE REMLER "14"

QUITE a few of the first Remler "14's," which have given very satisfactory service for some time, are now beginning to require a little attention.

The accompanying illustrations will give the Service Man the data on the terminal board of the power transformer, as well as voltage readings, color code and tube positions of the entire receiver.

Figure 1 is a top view of the chassis; A, are the R.F. transformer shields; B, the aligning condensers; C, the neutralizing condensers; PT, the power transformer; and D, the shield over the tuning condensers.

Then the posts, two antenna and one ground, will be noted at the rear of the chassis.

Figure 2 is a complete wiring diagram of this popular receiver. The color code and the wiring positions of the terminals on the power transformer, as marked in Fig. 1, are as follows:

(1), Red, to A.C. switch and condenser block, .1-mf. condenser; (2), Black, to terminal of 8-mf. electrolytic condenser nearest transformer; also red lead to '80 filament; (3), Red, to the other side of the '80 filament; (4), Other side of A.C. line; (5), Yellow, to one plate of the rectifier; (6), Center tap of the '45's filament winding, with 2000-ohm resistor to 12 on terminal board, and a jumper connecting 12 to terminal 8, on the under side of the board; (7), Yellow, to other rectifier plate; (8) and (9), to filament winding of the '24's and '27; (10) and (11), to filament winding of the '45; (12), terminal used for anchoring the other end of the biasing resistor, bridged under the terminal board of the transformer to (8).

The color code, throughout the set, is as follows: rectifier filament, plate of power tube and speaker field, plate of R.F., and cathode A.F., red; filament '45, cathode '27, plates '24's, blue; filament of first A.F. tube, detector cathode, and speaker voice coil, black; screen-grid, the plate of first A.F., and the plate of the rectifier, yellow.

Average operating voltages (at a line potential of 115 volts) for the "14" are as follows: Filament potentials: V1, V2, V3, V4, 2.3 volts; V5, 2.4 volts; V6, 4.9 volts. Control-grid potentials: V1, V2, 6 volts; V3, 6.5 volts; V4, 7 volts; V5, 47 volts. Plate potentials: V1, V2, 167 volts; V3, 95 volts; V4, 110 volts; V5, 235 volts; V6, 400 volts. Screen-grid voltages: V1, V2, V3, 105 volts. (Note the extremely high value of S-G. voltage on V3; this figure is given also in the factory manual.)

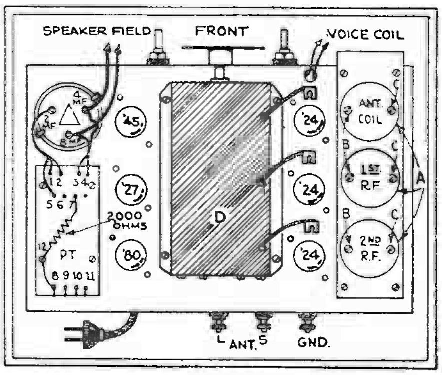

Fig. 1

Top view showing parts layout of the Remler "14". The P.T. connections have also been indicated.

SERVICING A RADIOLA

A MAN came to my shop one day and asked me if I thought I could fix his Radiola "46." I said that I might, so he told me to go ahead. When I arrived, his wife told me that if I thought that I couldn't fix it to say so, as she had already paid $10.80 for repairs and it did not work any better. The trouble was very low volume everywhere except at the extreme lower end of the dial. All the other Service Men had replaced a tube and the choke coil and said that the low volume was due to change of location, as the family had moved recently.

After an examination, I attributed the trouble to the balancing of the three tuned stages. By changing the balancing screws, I found that if I set the dial on some station such as KDKA, I could bring in the station with good volume but could not receive any other station with any volume.

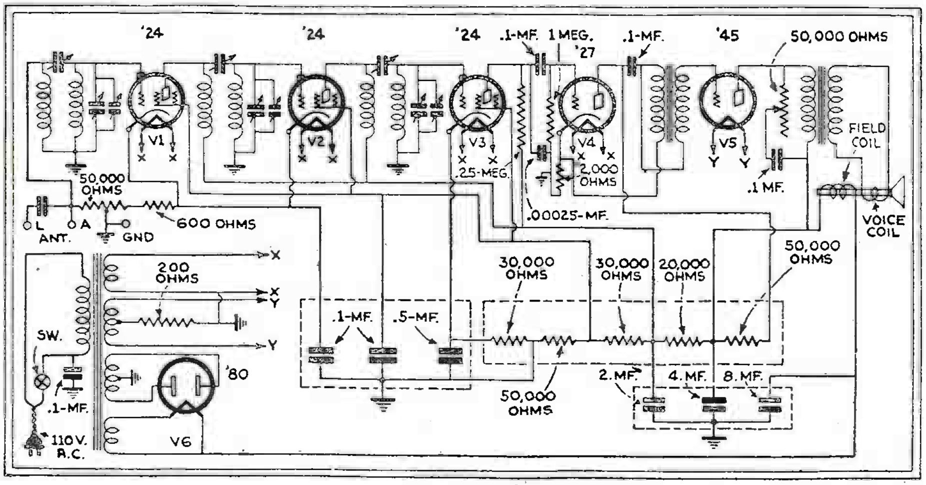

Fig. 2

The complete circuit diagram of the Remler "14". All resistor and fixed condenser values have been indicated on the diagram. The resistors and condensers that are enclosed by dotted lines are built as a single unit.

The detector stage seemed to be the offending one. As long as I set the dial on some weak station and then turned the balancing screw of the detector stage I could get the station perfectly. The screw had to be turned until it was very tight. After many trials and failures, I loosened the screws holding the stator plates and moved the whole section of stator plates slightly to one side. When the balancing screw was loosened and adjusted on some station I found that all of my troubles were over, for the set worked perfectly from one end of the dial to the other.

On this same model, if the station comes in better when the shield can is lifted slightly from its socket, it is a pretty sure sign that the set is out of balance. The balancing screws are located in the front of the chassis.

CROSLEY MODEL 124

IN servicing the new Crosley Model 124 receivers, considerable trouble has been encountered with the "biasing" of these new sets; the trouble usually showing up after 30 to 90 days of operation with high control-grid bias on the R.F. and I.F. tubes.

The biasing of all tubes, excepting the pentodes, is accomplished by resistors in the emitter circuits. The pentodes obtain their bias by returning their grids through the ground to a flexible resistor which connects to their filament center taps. The volume control varies the biasing resistance in the emitter circuits of the R.F. and I.F. amplifier tubes and also varies the resistance between antenna and ground.

The correct control-grid voltages on the R.F. and I.F. stages is 1.5 to 2.5 volts negative. Various ¼-watt resistors are used in these sets and it seems their value varies slightly after being placed in service. To overcome this, and also to "pep-up" these receivers, place a 400 to 750 ohm resistor on the volume control to ground, placing it on the opposite contact arm from the antenna and first R.F. coil.

Check all quarter-watt resistors very carefully, as they are a continual source of trouble. When touching the antenna post with the aerial lead and plenty of loud "clicks" are going through the speaker, and yet there is no reception, check your 2000 ohm flexible resistor across the oscillator-tube cathode to ground, as this is the usual trouble, being open.

PHILCO MODEL 70

WHEN the tone control on a Philco Model 70 receiver is turned to the right-hand position, that is, the modified tone position, the set will function properly; but, when turned to the left-hand position, the set will have a distorted tone something like a loud howl or a microphonic noise. In most instances, this noise will be noticeable even when the set is not tuned on a station. At first thought, the tone control was suspected, but glancing at the diagram, it can be seen that when the tone control is turned to the left-hand position, *it is not connected in the circuit.*

Referring to the diagram of Fig. 5, it can be seen that there is a phone condenser of .00025-mf.-capacity, identified by having a

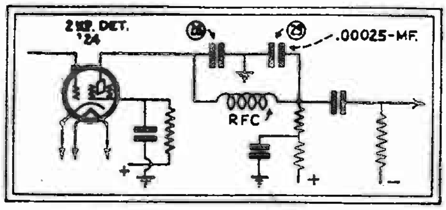

Fig. 5
The .00025-mf. condenser in the detector circuit causing the howl.

yellow dot on one side, connected to the plate lead of the second-detector next to the choke coil. Should this condenser become open or change in capacity, the above mentioned trouble will be noticeable in the receiver. Therefore, replacing this condenser with one having the correct value will remedy the trouble.

CROSLEY "BUDDY" AND "CHUM" MODELS

IN the Crosley "Buddy" and "Chum" receivers, the 10,000 ohm wire-wound resistor that furnishes voltage to the screens and R.F. plates may register continuity and still be open, if you make the test with a meter and battery.

If time is valuable, a 10,000 ohm carbon resistor can be shunted across the present wire-wound unit without taking the old one out, as it is braided to the chassis. But shunting a resistor across another is not to be practiced, unless the open one is certain never to make contact again while the receiver is in operation.

Brunswick A.C.-10—Columbia C-31

THE Brunswick A.C.-10 and Columbia C-31 are midget receivers of the same design, but placed in different cabinets. If you have a call on one of these receivers, and after taking analyzer readings no fault is revealed, but when the set is in operation you get just faint reception, you can look to the speaker for the trouble. A good way to tell where the speaker is defective is to remove it from the cabinet and, with the receiver in operation, press lightly on the cone with the fingers. If reception becomes normal, there is an open in the voice coil. This coil can be repaired, but extreme care must be used, since both the field coil and cone are braided to the speaker case.

It will be necessary to take a cold chisel and hammer, and knock off the braids holding the cone; which may then be repaired.

Servicing Majestics

WHEN new tubes are placed in the Majestic "70" series they may cause the set to oscillate on the high frequencies; this is natural, as the new Majestic tubes have a slightly lower grid-plate capacity than the set was originally balanced for. If a balancing wrench is handy this can be quickly remedied by backing up about an eighth of a turn on the three balancing condensers located between the R.F. and detector tubes. Even though this usually clears up the trouble it is *best* to use the regular balancing procedure.

When it is desired to have proof that a set is properly balanced, a simple system as outlined here is recommended. A roll of transparent gummed paper tape can be purchased at a music or stationery store, and can be used to make a dummy from a good tube by tearing off a short piece of tape and sticking it around one of the filament prongs of each of the R.F. tubes as it is being balanced out. This insures that the internal capacity of each tube has been balanced out and removes the hazard of the dummy tube having a different capacity from that of the tube to be used in the set.

In the Majestic "90" series it has been found that an aerial that is excessively long will cause oscillation, and sometimes a set that will not whistle without an aerial will do so with one. The remedy is to shorten the aerial.

The Majestic "52" series came out before the advent of the multi-mu tubes but circuit constants are such that the G-24 tubes can be replaced with the multi-mu G-51's and will show a vast improvement as to noise level and cross-talk. This change improves the set so that it compares favorably with the new model "21" series.

Numbers of Majestic superheterodynes have given trouble because the beat frequency oscillator would either work intermittently or refuse to work at all. It seems that the 150,000 ohm resistor from grid to ground is very important, and that the ones used for quite a while are subject to defects. To determine if the oscillator is working, remove the tube from that socket and note the difference in reception.

The tone of the superheterodyne will be distorted if the antenna coupling condenser is not adjusted correctly. On the "60" series this should be done with the aid of the meter on the front as the ear is ineffective against the automatic volume control. A "60" series volume control will have no effect if the A.V.C. tube will not pass current.

There is a simple method to test the filter pack condensers in the three different types of Majestic powerpacks. Each type can be identified by the number of connections or taps on it. The 9P6 has ten, the 8P6 has eleven, and both the 7P6 and 7BP6 have twelve. We are only interested in connections 1, 2, 3 and 4, Fig. A.

Disconnect the powerpack from the set and then turn it on so that the G-80 tube lights up. If there is a frying and popping in the condensers it shows that one was leaking and that the no-load voltage of the pack has broken it down. If the frying does not occur, then with a screwdriver short from No. 1 to No. 4. This should give a white breakdown flash. If it gives a red arc, it means that one or more condensers are open. After *leaving it on* for a minute or two, turn it off, and about fifteen seconds later test again from No. 1 to No. 4. There should be a white breakdown discharge. If not, it indicates that one of the condensers is shorted or leaking.

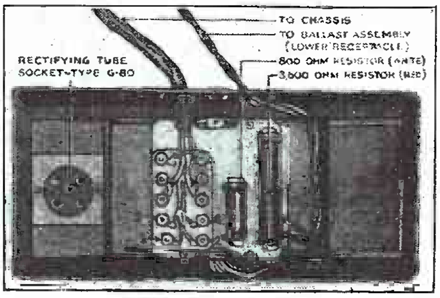

Fig. A
Power distribution plate in Majestic radio sets. Note the off-set position of terminal No. 1.

In the Majestic "90" series, trouble has been experienced with the .004 detector plate by-pass condenser. In nearly every case where they have broken down it will be noticed that two .002 condensers of like manufacture have been riveted together. In replacing, be sure to use two riveted together of different makes. It seems that they stand up better if that precaution is taken.

Philco Models

Lack of all "B" voltages in Philco Models 111 and 112 receivers may be due to various common causes and defects, which are easily found (if the Service Man knows where to look for them). One reason for this condition that is not so readily ascertained is an open section, or sections, of the 70-ohm center-tapped resistor connected in the negative return circuit of the high-voltage winding. This wire-wound resistor is located adjacent to the '80 socket, and is indicated in Fig. 1.

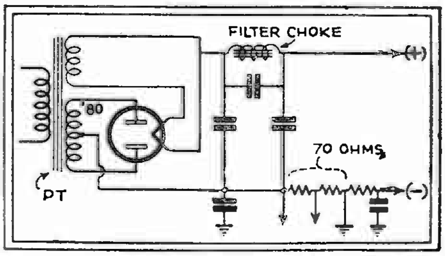

Fig. 1
Detail of the power unit of the Philco models 111 and 112 receivers.

The Philco 90 series is frequently serviced because of hum. The close proximity of the audio stages to the rectifier results in a certain amount of hum caused by coupling. The manufacturer has provided for this, by furnishing a shield plate *which must be inserted in its clips* between the pentode tube and the rectifier. For minimum hum, care should be exercised in selecting the pentode and first A.F. '27 to be used in the receiver. In most cases, slow-heating '27 tubes have been found to develop the least hum.

Bosch Models "48," "16," "17" and "J"

Often the complaint of weak reception will be had on the Bosch "48," "16," "17," and "J" models. The usual service procedure of many Service Men in isolating the cause of the complaint stands them in good stead in this particular case, because using a set analyzer will not disclose the trouble unless every test is made on that particular stage and every deviation from the normal heeded.

Many men use the aerial wire and start with the 1st R.F. to determine the stage that is inoperative, by touching the aerial wire to each screen-grid control-grid cap. With the set analyzer, an increased plate-current reading will be obtained as well as no control-grid voltage, a test which many men neglect. This is caused by an open 500-ohm carbon resistor in the control-grid cir-

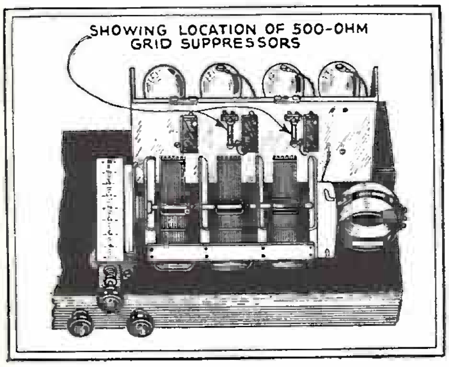

Fig. 2
Chassis layout of the Bosch 48 and 49 series showing the location of the grid suppressors.

cuit of either the 2nd or 3rd R.F. stage, and will cause a marked decrease in receiver sensitivity and selectivity. (Fig. 2.)

Stromberg-Carlson Models "19" and "20"

A stubborn case of hum in the new Stromberg-Carlson models "19" and "20" receivers recently caused some bewilderment on the part of several Service Men. Every circuit would check in proper manner. Condensers were checked for open circuit by bridging with others and by discharge test. The hum would appear and then disappear. It was finally traced to an open 3-ohm center-tap resistor located a few inches away from the first intermediate-frequency socket on the under side of the chassis. The open was most likely caused by the operation of the set without the several heater tubes in their proper respective sockets.

Servicing Stromberg-Carlson Receivers

In the older Stromberg-Carlson battery receivers (which include Models "501, "502," "601" and "602") very little trouble has been experienced with the chassis itself; although some trouble has been found in the various makes of equipment used, such as "A" and "B" eliminators. Very little trouble should be found with tubes in these models, since they are equipped with filament voltmeters which enables the customer to keep the tubes at the correct rating of 5 volts. Dirt on the volume and filament rheostats may cause a scratching sound when they are moved, and also may be a cause of voltage fluctuation in the filament circuit. This can be quickly repaired by cleaning with a piece of sandpaper, and wiping the wire clean. Microphonic tubes may be encountered; moving these about in different sockets will clear this trouble

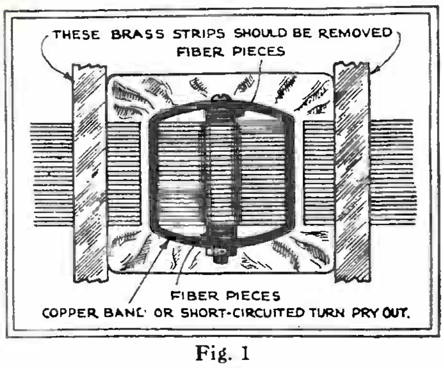

Fig. 1
In models lighting '01-A tubes from an eliminator, it may be necessary to operate on the "Siamese" filter choke.

In the later Models "633" and "634," which are equipped with A.C. power units to furnish direct current to the 201-A tubes, some trouble may be experienced with A.C. "hum" or ripple. These models use a Stromberg-Carlson cone speaker, and have a very low hum level when correctly adjusted. The power unit known as the "403-A" has a rheostat for hum control, located just above the loud-speaker jack in the front of the unit. All hum adjustments should be made with the power unit in its normal position with respect to the receiver. The antenna should be disconnected, or detuned, and the speaker brought close to the operator. The rheostat is then very carefully adjusted.

If adjusting the rheostat fails to lower the hum to a satisfactory degree, turn the receiver off, and with a 5/16 in. end wrench loosen the copper band's bolt. This copper band is a short-circuited turn around the "Siamese" choke coil. Pry the band out as far as possible, and insert between the band and the choke coil small pieces of fiber, which are cut with a slot which is "U" shaped, and straddle the bolt through the band. (See Fig. 1) Turn the receiver "on," and slide the copper band up and down; at the same time adjusting the hum-control rheostat until the minimum is found. Carefully tighten the nut holding the clamp until a better hum level is found. Two brass strips, placed across the top of the choke coil when shipped, should be removed. (Incidentally, remove your wrist watch when making these adjustments, as the strong magnetic field around the choke will magnetize it.) There is no danger of being shocked while making these adjustments to the copper band.

Dropping of the voltmeter hand in these models to zero, or one or two volts is an indication of one or both Tungar bulbs being burnt out or bad.

In the "635-636-638" Stromberg-Carlson A.C. models, the '27 tubes should be carefully matched; *i.e.*, for hum, particularly in the detector and first audio stages. Noisy tubes have been found to show up very plainly in these models, as do those which are microphonic. Socket springs should be kept clean by sliding the tube up and down in its socket.

These receivers employ a dual volume control: the first unit being a 10,000-ohm potentiometer controlling the amount of signal admitted to the radio-frequency amplifiers; and the second also a 10,000-ohm potentiometer, which regulates the amount of signal passed to the detector system. These two operate from the same control knob and when noisy may be cleaned by disassembling, and cleaning the contacts, roller, and resistance strip. Extreme care should be used in replacing them; in order that the two controls shall operate at the same time. This is done by loosening the nut holding the casing to its mounting bracket, and turning the volume control knob to its full *clockwise* position. Hold the knob in this position, and rotate the rear resistor casing to its *counter-clockwise* position. Without allowing the volume-control knob to turn tighten the nut holding the rear casing to its bracket. (Fig. 2).

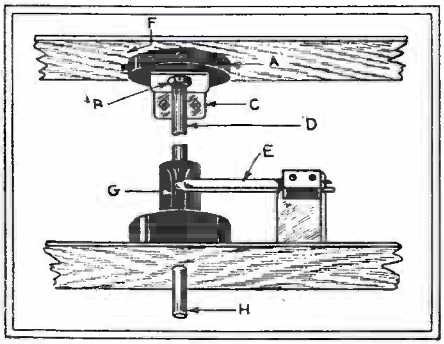

Fig. 2
A, rear volume control; B, hex. nut; C, mounting bracket; D, shaft; E, cam switch; G, cam. Turn casing F counter-clockwise, and control knob H clockwise.

This model is provided with an extra binding post marked "X" on the rear of the chassis for connection to the ground in cases of line noise. Controls for hum reduction are located on the rear of the chassis and should be very carefully balanced.

In the newer models, "642," "652," and "654," the chassis is the same, using three '24 tubes, one '27, one '45 amplifier, and one '80 rectifier. The "Model 641" is somewhat different in the audio system, being wired for use with a magnetic speaker only Care should be used in matching the '24 tubes, both for hum, and tone quality; the second stage of radio frequency being that in which a tube of normal characteristics should be used.

Noisy volume controls may be experienced which should be cleaned or, if badly worn, replaced.

If the dial seems to tighten after some months of use, so that it is very hard to turn, it should be taken apart. The chassis is removed from the cabinet, and the spring clip, and collar which clamps the dial, removed. The dial is then taken off by removing the three screws which hold it; this will give access to the shaft and mounting Three screws are removed which hold the shaft and mounting to the chassis. This assembly is carefully taken apart, wiping out the mounting and shaft; after which a little vaseline is put on the shaft, allowing it to turn freely in the mounting. It is then carefully assembled, being careful not to scratch the dial when replacing the spring. (See Fig. 3). This same trouble may also appear in the "Model 846" receiver, but not in the later Stromberg-Carlson receivers.

The "846" receiver is very sensitive; and great care should be used in balancing the tubes in these sets, in order to obtain the proper tone and sensitivity. The second stage of radio frequency and the automatic-volume control tubes are very important. These sets use a "tuning meter," which is

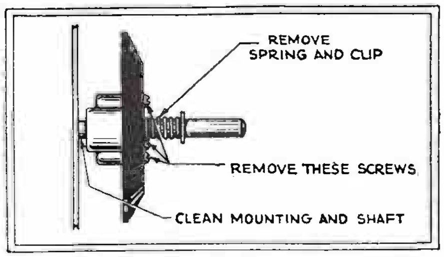

Fig. 3
Method of correcting undue tightness in the dial, in certain models where this may appear.

a milliammeter connected from the cathode biasing resistor for the second R.F. amplifier tube, and which reads the plate current for that tube. This same plate current is controlled by the control-grid bias; which is supplied by the automatic volume control, a '27 tube, which controls the bias of the control grids of the first and second R.F. tubes in accordance with the strength of the signal being received. It serves thus as an indicator to show exact tuning to the carrier wave, and enable one to use a "silent key" for tuning from one station to another. Care should be used in selecting the automatic-volume-control tube; as a tube with little or no emission will show little change in the needle pointer when tuning in a strong signal. Also, a tube with a very high emission will effect the sensitivity of the receiver. Care should also be shown in selecting the second stage '24 tube, in order to get the correct "swing" of the needle, and the best tone from these receivers. A.C. hum can be caused by a '45 tube weak or out, or by one side of the pilot light socket grounding to the frame, or chassis (Fig. 4).

The "Model 10" and "11" receivers are somewhat different from the other models; in that they employ a broad-band transformer, which couples the first and second R.F. circuits. A second "bi-resonator" circuit couples the second and third stages and a single-band transformer couples the third R.F. stage to the detector. This makes for sharper tuning, another feature being uniform quality and sharpness throughout the tuning range. This model uses a "range control" for local and distance reception. Provision is made in connection with this for long and short antennas, by a pin-and-jack arrangement on the rear of the chassis. Care should be used to get the correct setting for the antenna used. Tune in a weak signal on the high-frequency end of the dial; the position of the pin giving the loudest signal is correct, indicating resonance in the first tuned circuit. Provision for hum balance is provided on the rear of the chassis; the correct position is midway, but a milliammeter may be used in the '45 sockets to balance them together. The "Model 11" has a convertable cabinet in which a turntable and motor, together with a pickup, may be installed. Little trouble has been encountered here.

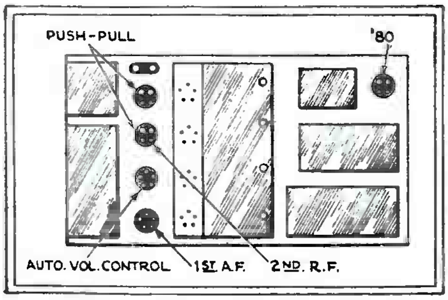

Fig. 4
Chassis layout of the "Model 846"

The "Model 12" and "14" receivers are alike, except that the latter contains the automatic phonograph. These sets employ the same radio-frequency system as the "10"; except for the addition of a '27 tube in the automatic-volume-control circuit and the "tuning meter" before mentioned, as well as an additional '80 tube to supply the speaker's field winding. The automatic-volume-control tube and the second-stage '24 should be carefully selected for proper tone and sensitivity.

Now a word about antennas for these sets; the writer has found that the proper selection of the aerial and ground systems to use with these receivers, in the locality in which they are to be installed, means a lot. Take everything into consideration, and then build the antenna system. It may mean a little extra work, and thought but it will be worth it.

The Sonora Specialist

SONORA receivers were extremely popular, and a great many of them are still in operation, presenting problems of servicing which are out of the ordinary in some ways. For this reason, the writer has combined all his experiences with the receivers of this make, to describe a thorough routine of service inspection and adjustment of a "Model 40" phonograph combination; although it is not to be supposed that all the troubles listed will be encountered in a single set.

The following list of complaints may be presented:

(1) Distortion on radio and phonograph, with lack of bass notes;

(2) Radio fades out, but can be brought back by snapping switch;

(3) Weak signals on the phonograph;

(4) Radio will occasionally start up a bubbling noise (motor-boating);

(5) Unevenness of sustained notes on phonograph recordings;

(6) Phonograph motor interferes with radio reception (brush-type motor);

(7) Noisy volume control on radio;

(8) Phonograph motor will stop before end of records;

(9) Oscillation on radio at 350 meters and 500 meters;

(10) Excessive hum.

A test of tubes may show that one of the

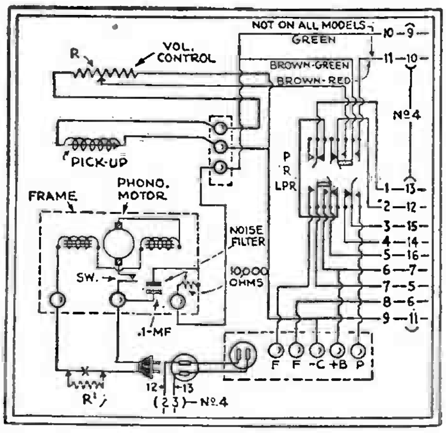

Phonograph unit of Sonora "Models 44," "46," and "40." Color code of tuner, all sets (below): 1 to 6, respectively: green; red-blk.; black; blk.-yellow, yellow, yellow-blk.

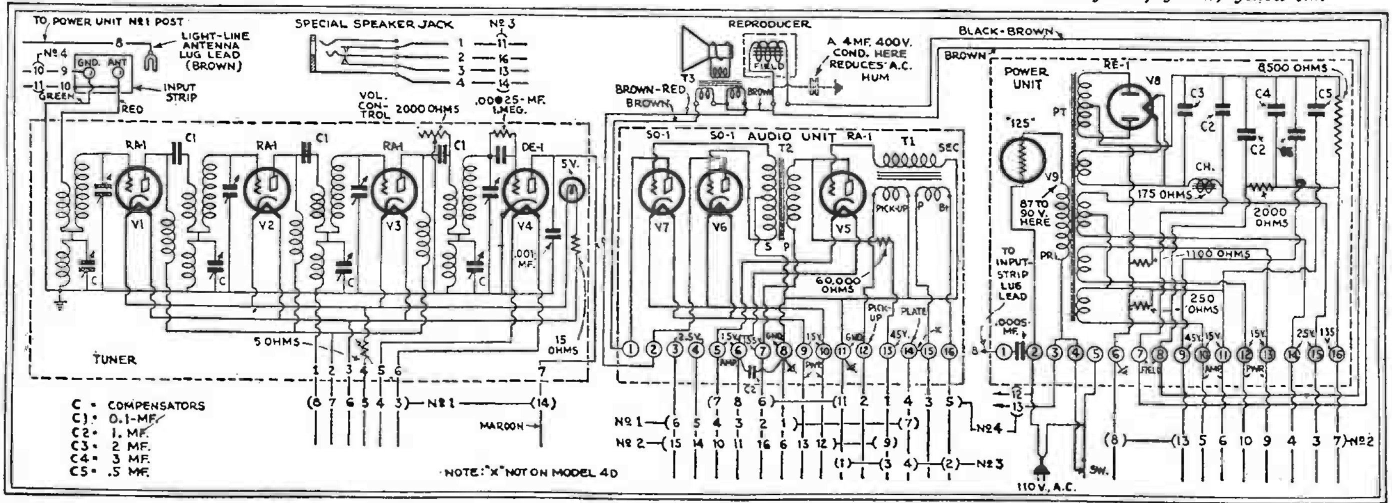

Fundamental arrangement of four Sonora receivers. "Model A-36" connects cables 1, 2, 3 between tuner, audio, power, and switching system units: "Models 44" and "46," cables 1, 2, 4, between tuner, audio, power, and phonograph (diagram at upper right) units: Model 20, cables 5, 6, between audio, power, and phonograph units. Resistor R is 15-ohm: R1, is only in D.C. sets; pickup is of "low impedance" type.

SO-1 push-pull power tubes is inoperative; so that the other receives an increased plate voltage and, with the lower current flow through the biasing resistor, lowered negative bias. The result will be that the plate current of the remaining tube will be too high; and this is one cause of the distortion, in radio or phonograph reproduction, listed as point No. 1.

Overhauling the Tuner

After replacing defective tubes a test for fading (No. 2) may be made. With the analyzer plug in one of the R. F. sockets, it is found that the plate current is increasing and the grid bias decreasing, while the signal is fading out.

The probability is that the 0.1-mf. coupling condenser (see below) between the plate of one R. F. amplifier and the grid of the next is leaking; this gives the grid a positive bias, and prevents the tube from functioning as an amplifier. These condensers are of the paper type, and subject to deterioration as a result of the heat of the tubes. It is advisable to replace all of them with the bakelite-encased, mica-dielectric type but, since each condenser is located under its tube socket, it will be necessary to take off the bottom of the tuner unit.

This may be pulled without disturbing the audio unit, by taking off the dial plate; but it is necessary also to disconnect the tuner's cable from the terminal strip behind the audio unit, and pull out the extreme left phonograph record rack to remove the bolt directly above the latter. This bolt holds the left side of the tuner; while the bolt at the right side is accessible from the rear of the cabinet, just above the reproducer.

After unsoldering the pilot-lamp leads, the tuner unit may be taken out. While replacing the coupling condensers, the opportunity is also obtained to tighten up the screws holding the neutralizing chokes to the chassis. These chokes, which are under the coil sockets, are part of the neutralizing system and must be properly grounded; or instability will result. The chokes under the tube sockets, on the other hand, are in the plate leads; if one opens, there will be a lack of voltage on its R. F. plate.

Before reassembling the tuner, the contact arm of the volume control should be cleaned and a little oil applied, to cure the noise complained of as No. 7.

A reversal of the antenna and ground leads will cause hum (No. 10) as well as oscillation at 350 and 500 meters (No. 9); but hum remaining after this is corrected may be cured with a one-microfarad condenser between terminals No. 6 and 8 on the strip behind the audio unit. This bypasses the grid-biasing resistor of the R.F. and first A.F. stages. Hum remaining after this may be attributed to a shorted air-gap in one of the filter chokes of the power pack.

If there is no voltage on the detector plate, the black 60,000-ohm resistor under the audio unit is open. In this chassis, the detector plate voltage is tapped off the plate of the first audio tube through this resistor, which serves also as an A.F. stabilizer.

Adjustments on the Phonograph

There are several possible causes for weak reproduction on the phonograph (No. 3) which will be taken up in this order.

The single-turn secondary of the output transformer (in the reproducer) is a copper band around the transformer. If corrosion causes high resistance, this band should be disconnected from the voice coil, and the contacts cleaned. This will restore sensitivity, particularly on the high frequencies.

If the cone is not centered properly, it is necessary to loosen the group of five bolts and readjust it.

The radio-phono switch points also provide a place where poor contact may be found. To attend to this, it is necessary to remove the motorboard. First take out the automatic spring holding the lid of the phono compartment; neglecting this will cause damage to the cabinet and to the mechanism. Disconnect the A.C. plug and the pickup leads from the rear of the cabinet.

The contacts are then cleaned with a small file, of the type used for automobile ignition work; the leaves are bent to increase the tension on the contacts. The phono volume control, which is a 15-ohm potentiometer across the pickup, is also sandpapered; since any imperfect contact will materially reduce phonograph volume.

Before replacing the motorboard, it is desirable to see that the filter unit on the A.C. line to the motor is in good condition. If the resistor is open, this will cause radio interference when the motor is running (if not to the set owner, at least to his neighbors—No. 6).

Before replacing the turntable, check up on the governor. Uneven running (No. 5) will give the optical illusion that the governor balls are square. To cure this, loosen the screws holding the governor springs and, holding the balls tight to the shaft, turn in the screws again. There is, at one end of the spring, an oval hole to take up slack.

If the governor shaft is held too tight in its bearings, it will be necessary to loosen the set-screw at one side of the outer bearing, and adjust the tension nut to allow about ¼-inch end play. The end spring will hold the shaft steady in operation.

Stopping before the end of the record (No. 8) is quickly cured. While the turntable is out, slack off on the three bolts holding the motor, and twist the motor assembly counter-clockwise. This will change the cut-off point of the automatic stop, and the records will play through to the end.

Since this last operation affects the speed of the turntable, it will become necessary now to readjust the speed to 78 revolutions per minute. If the speed indicator shows "Min." before the speed is sufficiently reduced, bend the brake-pad holder slightly toward the balance wheel. This will check the speed; and the indicator is again readjusted until the operation is correct.

Ballast Lamp a Guide

Trouble in the power pack may be indicated by a bright glow in the ballast tube; normally this tube gets hot, but glows only dimly, if at all. A short of any of the filter condensers will light this tube brightly; while a short in the primary of the power transformer will blow it out.

To localize trouble in the pack, disconnect leads No. 7 and 8 from the terminal strip of the pack; these connect to the field coil of the dynamic reproducer, which also serves as a filter choke. Then test the transformer, filter choke and condensers for shorts. See whether the pilot-lamp bracket is shorted to the housing of the tuner.

The tubes used are—with the exception of a 2.5-volt detector—of the Blue Sonora 15-volt filament type, with a separate heater connected to one side of the cathode; by which means they are able to employ UX tube bases, instead of UY. In the accompanying table, data for these tubes are shown. The RA-1 (general-purpose) type is equivalent to the Arcturus 15-volt type-48; the SO-1 (power amplifier) type to the Arcturus 15-volt type-40. Other tubes, used in Sonora models, the DE-1, RE-1, SO-2 and RE-2, corresponded respectively to the standard '27, '80, '50 and '81 types in general use. "Durasite" ballast tubes were used in two types; the "125" to drop line voltage from 110 to 85, at 0.75-ampere; and the "150" to do the same, under a load of 1.4 amps.

In addition to the "Model 40," the "30" and the "32" use the same chassis, but without phonograph attachment. Three other models were made by the same manufacturer—the "36" has '50 type power tubes, and an additional R.F. stage; while the "44" and "46" are phonograph combinations, in different cabinets. While the manufacture of the line has been discontinued, parts are still available; and tubes are available under different type numbers.

Average Tube Readings*

	R.F. "RA-1"	*Det. "DE-1"*	*A.F. "RA-1"*	*Power "SO-1"*
Filament, volts	15	2	15	15
Plate, volts	107	22	104	170
Plate, mills	4¾	1.2	4	12–23
Grid bias, volts....	4–6	0	4–6	36

**These values are for 110 volts A.C. on the line and 88 on the transformer primary.*

RECEIVER WATTAGE

WHEN the question is raised, what current does a receiver draw, it may be answered by actual measurement. This, however, involves a certain amount of trouble. The question, however, comes up when the customer asks about the expense of operation, or when the Service Man is selecting a voltage-regulating device for use between the receiver and the house-lighting receptacle.

A very simple approximation may be found, however, it is pointed out in a recent bulletin of the Clarostat Mfg. Co., by adding up the requirements of the tubes in the set. After making allowances for losses in the power unit and resistors, the requirements of each tube will run as follows:

Type	Watts	Type	Watts	Type	Watts
'12	10	'27	7	'10	17
'71	10	'24	7	'50	45
'26	5	'45	18	'80	15
		'81	15		

For instance, a receiver having three '24s, two '27s and a '45, with an '80 rectifier, thus adds up 68 watts; it is easily taken care of under any load by an automatic voltage regulator rated under 100 watts. Only a set incorporating a '50 tube, or push-pull, is apt to require a larger voltage regulator, of 150-watt rating.

Some Notes on Repairing "B" Power Units

MOST Service Men learn to adopt a certain individual procedure when testing a certain piece of apparatus or a certain type of unit. However, there is naturally a "shortest way"—one more convenient than others—which will save both the patience and the time of the professional man.

Repairing manufactured power units is not difficult if the parts are accessible. In most cases, even though the unit is enclosed in a metal case, the parts are mounted on a chassis; so that, when the case has been removed, the parts are easily reached and tested. In some few cases, of course, units are sealed in wax or pitch and it is advisable to return such a unit to the manufacturer for repairs.

Difficulties Encountered

The defects encountered in "B" power units may be classified into several groups; each group in turn being sub-divided according to the element causing the trouble.

The first defect is a low output voltage from the unit. This may be caused by the line-voltage being below normal; by a defective rectifier tube; a defect in the receiver, causing too much drain on the unit; a defect in the voltage divider; or a defective filter condenser.

The second principal defect is a loud hum in the set. This may be due also to a defective rectifier tube; or to an insufficient number of filter condensers, or a defect in one or more of them; a defect in one of the filter choke coils; a defective transformer; or, in some few cases, reduced line-voltage.

The third characteristic defect is total failure of the unit. This may be caused by poor design or by defective apparatus. Under poor design may be listed the use of incorrect parts as, for example, where the wrong type of rectifier tube is placed in the socket or even used for a time. The use of a condenser with a working voltage too low, for the surges encountered when turning the power off, is also a common cause of trouble. Under defective apparatus, may be listed any of the parts used to make up the complete unit; since a breakdown in any of the parts in the unit may cause complete failure. The connections must also be accounted for and, finally, the line-voltage must not be neglected.

This last point brings to mind a case encountered by the writer some time ago, in which a blown fuse necessitated a train ride of over an hour, in order to make a set operate again! Naturally, if the owner had used a little care, or if the circumstances had permitted the writer to question him by telephone, the trip would have been saved.

The outline of troubles given above is not complete, since each group includes a number of minor causes. It does, however, include the main points and those most likely to give trouble. For instance, suppose the trouble is insufficient output potential. (See Fig. 1.) This may be due to either low line-voltage; a defective rectifier tube; excessive current drain in the receiver, a defective transformer, choke or condenser; or an incorrect voltage divider. All of these causes of trouble are mentioned above.

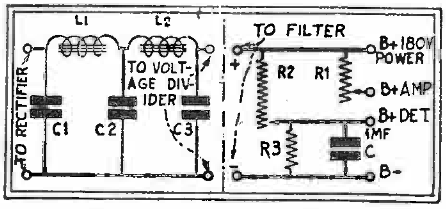

Fig. 2 Fig. 4

At the left, the fundamental filter circuit of most power units. At the right, a type of voltage-divider sometimes found.

Other sources of trouble may also be included in the outline above, as sub-entries. For example, if part of the secondary winding of the power transformer is short-circuited the output voltage is reduced; and the winding will therefore probably burn out, because of the excessive current flowing in the closed part of the winding.

If the rectifier tube is defective, the output will naturally be reduced or entirely lacking. In the filament type rectifier (such as the '80 tube shown) the rectifying action depends on the electron flow from the filament. If the filament is operated at an excessive voltage for a period of time, the electronic emission is rapidly reduced; and this causes a reduction in the output current and voltage.

Lack of Voltage or Hum

The design of the voltage divider is another important point with regards to the output voltage. If its resistance is too low, a great deal of the available current is lost as the "bleeder" current flow through this resistor; and the result might be insufficient current output for the set. If one of the filter condensers between the taps and the negative terminal ruptures, the resistance of the divider will be reduced; but, in this case, the trouble will be easily located by lack of voltage on the taps between the condenser and the negative end of the voltage divider.

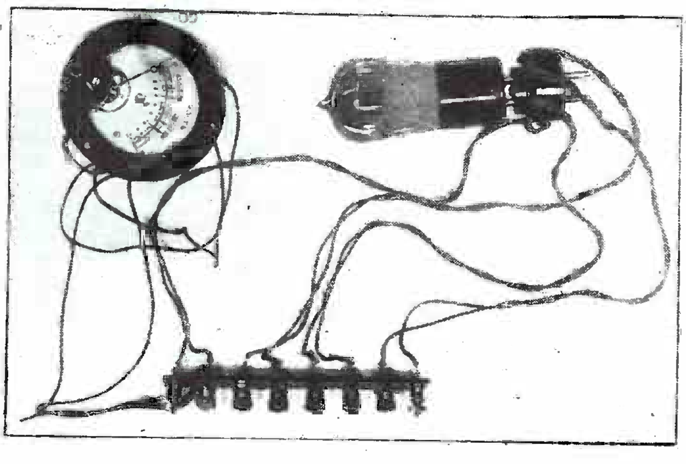

Fig. A

A simple apparatus which will be found very convenient for testing power units, giving the input and output voltages of the rectifier, as well as determining continuities. Leads from the terminals of the tube base and tube socket are taken separately to the binding posts; permitting the insertion of the meter in any circuit, as desired.

With respect to the second group of troubles, excessive hum may be caused by low line-voltage; because the rectifier can not operate correctly with the reduced input voltage. The hum may also be caused by a defective or short-circuited choke; for this piece of apparatus is the mainstay of the filter circuit. Lack of filter condensers will also cause a loud hum.

It is not necessary to go into further details about these troubles and how they are allied. We are all familiar with the faults; it is the remedy which is most needed. In order to illustrate the method used in locating a defect, we will consider another example.

Continuity Tests

Suppose we have a dead power unit to repair. There are a group of tests which may be used to locate the source of the trouble in a very short time. First, measure the line-voltage with a suitable A.C. voltmeter. If this is correct, or nearly so, test the continuity of the primary circuit of the power transformer. A battery and a voltmeter connected in series across the two prongs of the plug will show this very well and, in addition, indicate any defect in the power switch or wiring which completes the primary circuit. The power switch must be in the "On" position, of course. If, when we first examined the unit, the rectifier tube was warm or the filament lighted, this first test is unnecessary. In the filament type of rectifier, it is possible for the high-voltage winding, or one side of it, to burn out and the filament of the rectifier tube still to light. In this case, the continuity of the high-voltage winding must be checked.

This may be accomplished without removing any of the wires, by placing a plug similar to the base of an old tube in the socket of the power unit, and connecting wires to the grid and plate prongs. We will find further use for this plug, later. The conductivity between the two ends of the winding, and also between each end and the negative terminal of the power unit, in the case of the full-wave system, should be determined. It is possible for the negative lead to be open, while the continuity of the complete winding may not be affected.

There is one other test which must be made at the transformer. In the power units designed for the "BH" or cold-cathode type of rectifier tube, two condensers (known as buffer condensers) are connected across the sections of the secondary winding. In case one of these condensers breaks down, a continuity test will not indicate the trouble unless the condensers are disconnected from the circuit; since they are shunted by the secondary winding.

Fortunately, these condensers are usually quite accessible, being located close to the transformer; and the wires are connected directly to the terminals of the winding. After they have been disconnected, they may be tested in the usual manner with a "B" battery or other source of direct voltage. The battery is connected across the condenser for a moment, and then the condenser is short-circuited with a piece of wire. If a spark is evident when the condenser is shorted, it is in good condition. If a spark is observed when the battery is connected, the condenser is undoubtedly short-circuited. It is advisable to short-circuit the condenser in a rather dark place, so that the spark can be readily seen. This is more important with small condensers, of about 0.1-mf. or so; since their spark is not very large. Smaller condensers than this cannot be tested in this manner.

Testing the Filter System

We have now tested the unit (except for the rectifier tube) up to the filter section. If any defect is found, it is necessary to localize it by making tests of the particular part suspected. In other words, if one side of the power transformer's secondary winding appears to be open, tests should be made at the terminals or the wires coming directly from the transformer, in order to be certain that the trouble is not due to a defective connection.

The next section of the power unit is the filter. We are all familiar with the apparatus used in the conventional type of filter; hence a description is not required. Two tests are necessary for this part of the unit; tests for the continuity of the choke coils and tests for the condition of the filter condensers.

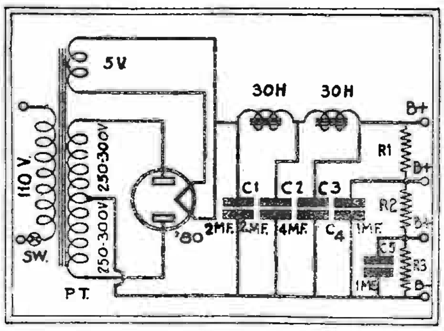

Fig. 1

The general layout of a power unit; values vary, but are generally in the order of those shown. Connections must be broken, to test the continuity of shunted condensers.

The choke coils may be tested by connecting the continuity tester that we used before (the "B" battery and voltmeter) between the cathode of the rectifier and the maximum output terminal of the unit. The correct terminals are the filament of the '80 type tube and the "plate" terminal on the tube socket for the "B—" rectifier. It will be noted that the reading on the meter is lower than when the two wires of the tester are connected directly together; this is due to the resistance of the chokes.

The filter condensers cannot be tested while connected to the power unit; because they are joined together. Also, they should be disconnected while testing the chokes, as a precaution in the event that one of them is defective. When testing the chokes the voltmeter and battery is connected across the terminals of each of the chokes individually.

In case they are enclosed in a single container, the center terminal is one end of each of the coils, and the other two terminals are the extreme ends. While making this test, it is well to make sure that one of the windings is not short-circuited to the core or the container. This test can be made with the continuity tester, by connecting one terminal to any bright metal part of the case and each end terminal, in turn. In case of defect, the complete unit must be discarded and replaced, unless the chokes are enclosed in separate containers.

Convenient Condenser Tests

Next, we test the filter condensers. We have already disconnected them from the unit, on the choke side. The easiest and most satisfactory way to test them is to connect a "B" battery, or other source of fairly high voltage, across the condenser for a moment; and then short-circuit the terminals of the condenser with a piece of wire as explained before. In case of doubt, it is advisable to try the test several times. (The battery should be connected for only a moment.) In most cases, all the filter condensers are enclosed in a single container. A common terminal is brought out, and connected to the center or end of the power-transformer winding, and also to the end of the voltage divider. This common terminal is used for testing each of the condensers.

If one of the condensers is short-circuited or ruptured, it may be possible to place another condenser in the power unit without removing the complete block. The capacity of the defective condenser may be approximated by noticing its position in the unit. (See Fig. 2.) The first condenser C1 usually has a capacity of 2 mf. The next, C2, is usually 2 mf.; and the third is seldom more than 4 mf. In many units condensers of about 1 mf. are connected between the negative terminal and the taps on the voltage divider. These condensers can be tested in the same manner.

The final section of the unit is the voltage divider. Dividers may be of different types. The first is a number of resistors connected in series, with taps at the connecting links; this is shown in Fig. 3. In this type of resistor unit, if one of the resistors near the negative end breaks down, the voltages at the higher (or rather more positive) taps will be excessive, and the taps on the negative side will not give any voltage reading. The defective resistor or connection can be located in this way, and may be either repaired or replaced.

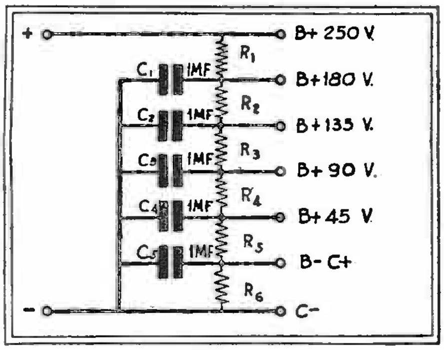

Fig. 3

The standard arrangement of a "B" voltage divider, whether the resistors are separate components, or represent only taps on one or two resistors. Values vary with the voltages desired and current drawn.

Voltage Divider Arrangements

The next type of divider is electrically similar to the first; but a single resistor is used, with taps at the required points. The method of finding the defect is the same as in the first case.

The third and last method is different in design; it uses several resistors of the variable type and a fixed resistor, connected as shown in Fig. 4. If the fixed resistor R3 breaks down, the voltage on the detector tap will be high. If either of the variable resistors breaks down, no voltage reading will be obtained. In testing any of the voltages of the power unit, a high-resistance voltmeter must be used. By "high resistance" we do not mean necessarily as high as 1000 ohms per volt, but at least 250 ohms for each volt on the scale.

If the trouble in the unit is excessive hum, a difficult set of tests must be made. In this case, the voltage is of little value; as the voltages may be correct, and the hum still be too prominent. If one of the filter chokes is short-circuited, the hum will be excessive. At this time, it might be well to point out that many power units do not contain two chokes. Some units use the field coil of a dynamic speaker as one of the chokes. If the wires to this coil become twisted, shorting the winding, the hum will be excessive and the volume of the set will be greatly reduced.

Rapid Testing Methods

In some cases, a reversed plug in the line will cause hum. Lack of correct grounds at the proper points will cause loud hum. The effect of the chokes on the set can be checked, by deliberately short-circuiting each of the filter chokes in turn. If the hum increases when they are short-circuited, they are in good condition and operating.

The condensers can be checked by disconnecting them from the set. If the hum increases they are working properly while, if no difference is noted, either the condenser is defective or it is not needed there and can be used to better advantage at some other point in the unit.

If the design of the power unit does not permit changes, external chokes and condensers may be added. In many cases, the operation of a power unit is improved very much by inserting an audio-frequency choke in series with the detector plate lead, with a by-pass condenser connected from the choke to the negative lead of the power unit. The condenser is connected on the side of the choke which leads to the set, as shown in Fig. 5.

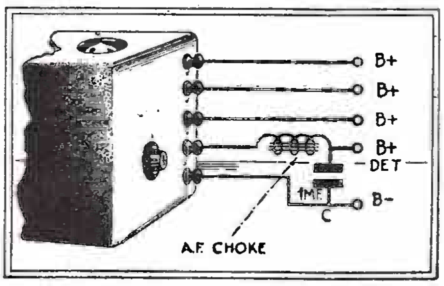

Fig. 5

Since this is the critical stage of a receiver it may be desirable to add additional filtration to a detector's power supply by connecting an external choke and condenser in series with the tap on the power unit.

Testing the Tubes

We have now accounted for all the apparatus used in the ordinary types of power unit. We have not yet considered the testing of tubes; but, since they are one of the most important parts of the unit, and one of the most frequent sources of trouble, we will consider them separately.

We mentioned the need of a test unit while checking the continuity of the windings of the power transformer, and suggested using a unit with the base of an old tube, so that we could reach the connections at the rectifier socket, without any difficulty. We will now elaborate on this simple unit, so that we can also use it for testing tubes. A socket of the ordinary UX type, made for sub-panel assembly, is mounted to the top of the tube base, after connecting short leads to each of the prongs of the base and the terminals of the socket.

Next, a terminal strip, with eight binding posts, is prepared; and the wires from the socket and base are connected to these terminals. The plate prong and terminal wires are connected to the first two posts, which are adjacent. Then the grid and the two filament circuits are treated in the same manner. Finally jumpers are connected across the corresponding posts.

In using the unit to test the continuity of transformer windings, it is merely placed in the socket of the rectifier tube; and the two ends of the winding are then available at the terminals of the unit, which correspond to the grid and plate for the units using the '80 type tube, and to the two filament terminals for the "BH" type.

When testing the rectifier tube, after the rest of the power unit has been found in good condition (either by making the necessary tests on the various parts or by replacing the rectifier to be sure that this is not the cause of failure) the A.C. input voltages to the tube are first measured with a suitable A.C. voltmeter; and then the D.C. output of the rectifier is checked with a suitable D.C. voltmeter.

The "BH"-type Rectifier

Suppose, for example, we consider a unit using a "BH"-type rectifier tube. The A.C. voltages of the power transformer's secondary winding are checked by placing the test unit in the rectifier socket and connecting the A.C. meter between each of the filament terminals on the binding-post strip and the negative output terminal of the power unit. When these voltages have been determined, the rectifier tube should be placed in the socket at the top of the test unit plug; and the D.C. output voltage measured with the D.C. meter. The jumper between the two terminals of the plate prong should first be removed, so that the rectifier is not connected to the filter and voltage divider. This is done to protect the tube being tested.

The D. C. output of the rectifier will be somewhat lower than the A.C. voltage; because of the voltage drop in this tube. The difference in the voltages, however, is not very great for good tubes. After the tube has been checked in this manner, it should be checked under load, by replacing the jumper on the "plate" binding posts of the test plug. The operation of the filter and voltage divider must be known before this is done. When making changes in the connections of the jumper or other wiring to the power unit, the power switch should be turned "off."

When testing the '80 type tube, the connection between the rectifier filament winding and the first filter choke must be removed; so that the rectifier is not connected to the filter when making the first voltage test. By removing the jumpers on each of the two anodes (plates) in turn, the operation of each side of the full-wave rectifier can be checked. This is done by removing the "F" jumpers for the "BH" type tube and the "G" and "P" jumpers for the '80 type tube. The output is reduced, of course, when only one side of the rectifier is used.

The test plug can be made as a complete unit by obtaining a combination A.C. and D.C. voltmeter with a suitable scale reading. This meter can then be mounted in a small box, with the eight binding posts, and fastened permanently to the test plug. See Fig. A.

* * *

MAJESTIC "9P6" CONDENSER PACK

WHEN testing the power pack in the Majestic "9P6," for shorts in the condenser bank, a reading will be obtained (in the earlier models) between the second and the fifth taps. This is due to a choke coil, which is mounted inside the condenser can, and connected between these two taps.

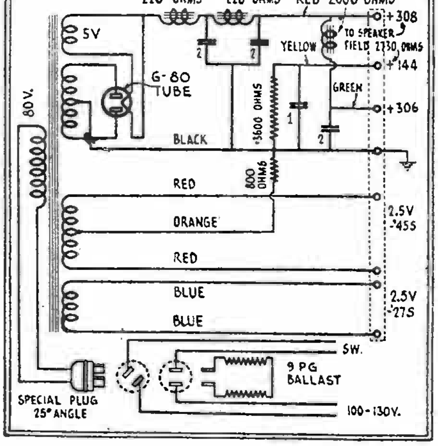

The schematic circuit of the earlier Majestic "9P6" power pack, showing the choke between detector and power-amplifier tap.

In the later models, this choke has been replaced by a resistor. In case of an open in this choke or resistor, there will be no plate voltage at the detector tap.

A CONVENIENT METHOD OF NEUTRALIZING

IT is not generally known that two tubes of similar characteristics have exactly equal grid-to-plate capacities. (Any difference that may exist is so small as to be difficult of measurement.)

This immediately suggests that, if we have a set employing, say, type '01A tubes, in the radio-frequency stages, we can use burnt-out '01A tubes, whose grid and plate elements are not shorted, as neutralizing capacities to take the place of a regular neutralizing condenser.

Referring to Fig. 3, it should be quite apparent that, if point 2 in the tuned circuit (at left) is the exact *electrical center* of the grid inductance, stability is obtained only when the value of the capacity C2 is exactly equal to the value of the inter-electrode capacity C1. In such a circuit arrangement a burnt-out tube V2 (of the same type as V1, and whose grid and plate electrodes are intact) will constitute an ideal neutralizing condenser C2 and will require no adjustments to achieve stability.

Use a socket, or solder the leads directly to the grid and plate prongs of V2—the "neutralizing tube."

(The exact position for tap 2 must be determined by experiment. It will be approximately at the mechanical center—as seen or measured.)

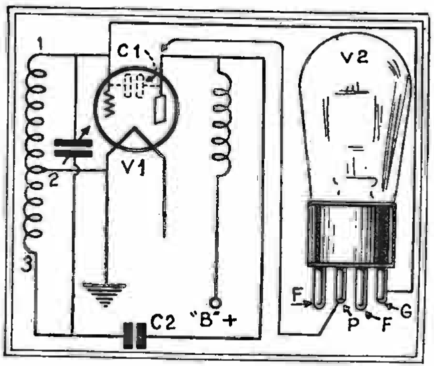

Fig. 3

The burnt-out tube at the right has the same capacity as V1, and therefore is an ideal neutralizing condenser.

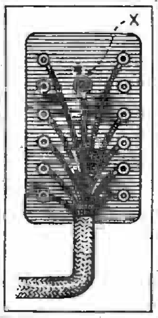

Fig. 1

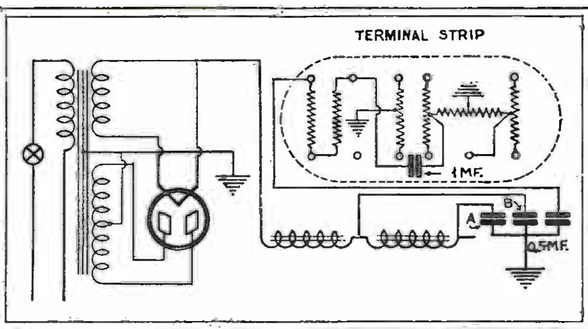

Fig. 2

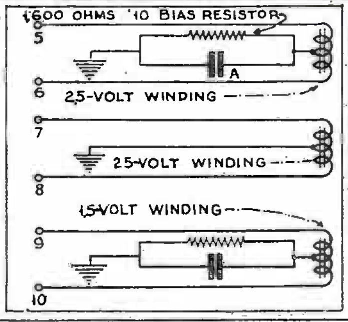

Fig. 3

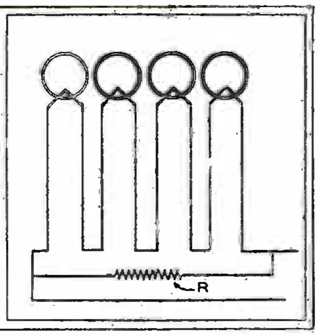

Fig. 4

At the left, a view of the terminal strip attached to many Atwater Kent power packs. Connections here should be tightened. In later models, the filter condensers A and B (Fig. 2) should be checked if an '80 goes out. In the Sterling pack, check the by-passes of the biasing resistors (Fig. 3). In a D.C., with tube filaments in series, excessive line-voltage conditions cause short tube life. A shunt resistor, as shown at the right, will safeguard them.

Service Hints on Some Popular Receivers

OFTEN a source of hum, in the Atwater Kent “36,” “37,” “38,” “40,” “42,” 44” and “52,” is a faulty connection between the bolts in the power pack and the terminal strip, especially that shown by X in Fig. 1. The connection may have been tight enough originally; but the heat of the transformer has caused the bakelite to expand enough to loosen our formerly good connection. It is advisable to go over all of them with a pair of pliers.

In the Atwater Kent “Model 37” the filter condensers, as shown as A and B in Fig. 2, may burn out; a symptom of this is overheating of the rectifier tube, due to the extra load which is imposed on it by the shorted condenser. In the new A. K. direct-current set, audio-feedback howl may occur; great care should be taken to see that the ’12A tubes in the detector and first audio sockets are non-microphonic. It is sometimes necessary to install a heavier howl-arrestor than the one regularly furnished.

When sets have been in use from nine months to a year, they may lose their pep. A few Service Men then resort to the method of lining up the condensers correctly; at the factory these were purposely set a bit out of line so that the set would be easier to stabilize. This is not noticed while the installation is new and at top-notch efficiency; but later becomes obvious.

If you find terrible hum when a station is tuned in, and excessive hum when the set is not in resonance, suspect an incorrect bias on an audio tube—especially in the Sterling power pack of a “Radiola 41.” The condenser A (Fig. 3) may have broken down. In an emergency, just clip one lead of the condenser; from a service standpoint, another must be installed.

The “Radiola 32” power pack has a 65-volt primary; the other 50 volts are dissipated by the 886-type ballast resistor. In the “Radiola 50,” the grid suppressors are 1000-ohm, as in the “17” and the “41.”

A loss of volume, and no distance, on the “Radiola 20,” accompanied by lack of response to the trimmers, indicates a bad connection to the rotors of the condensers. Some good pigtail wire will do the trick.

If a “Radiola 44” or “46” oscillates, and changing tubes does not help, see whether the stage shields are not loose. If they are, and tightening does not help, take the chassis and pack out of the cabinet, and place them at the same distance that they usually are separated. You will find on the front of the assembly three flat-head screws to adjust trimming condensers which may be used to stabilize the receiver.

Noise in “Model 72” and “92” Majestic may be due to thumb nuts which have been tightened only by hand, and have become loose on account of vibration caused by the fact that the dynamic is on the same shelf as the power pack.

Noise in a 1929 Eveready may be due to the looseness of the set screws on the variometer; if the set oscillates, look at the stage shields.

If the analyzer shows no plate voltage at the detector or first A.F. socket in a Temple “Model 8-60,” “8-80” or “8-90,” we know the transformer primary is burnt-out. This is the second terminal strip from the left (with the set upside down and back facing us). The same is true of the screen-grid models. All of these models with a serial number under 7500 have the pilot light across the ’27 filament leads; if you will change it to take current from the ’45 leads, you will stop a noticeable flicker.

The usual call on a D.C. Temple is to replace the ’71A tubes, which burn out very quickly under excess line-voltage. A cheap method of overcoming this is to put a 400-ohm grid suppressor R across the filaments, which are four in series, as shown in Fig. 4. This will cause a small voltage drop.

In the Colonial “31DC,” the burning out of the condenser which is in series with ground will make the “on-and-off” switch useless. As long as the line plug is in the wall socket, the set will operate if this condenser is shorted. To verify this, disconnect the ground, and the set will stop. Slide the set out, turn it on its back, and disconnect the assembly of three condensers at the farthest left (with back of set toward you.)

KOLSTER AND SPARTON SETS

FADING in a Kolster “Model 6-K” set, complicated with noise similar to static, was in a recent case traced to the volume control. Without any alteration of its setting, even local stations would fade and then come back on with great volume. The volume control, which in this model is a filament resistor in series with the 26-type tubes, had been cleaned and tightened about six weeks before to deal with this condition.

The second time, after cleaning all parts of the control with alcohol, as I had done before, I thinly coated them (even the resistance wire!) with Nujol. Since then this trouble has not been experienced again. The grating sound caused by moving the resistor arm is eliminated also.

As to the excess noises, I suspected the audio transformers, and replaced them. This did not eliminate the noise; so I tested the power pack. On temporarily shorting the resistor between the detector tap and “B+90” I found it stopped entirely. This indicated that the noise was in this unit, and it was accordingly replaced.

In the same model, I found a set which could not be turned off entirely. The tubes would dim, but would not go out. Even turning off the house switch would not entirely stop the flow of current; though detaching the ground wire, or reversing the plug would do so. The latter, however, was obviously improper, because the polarity had been marked before this trouble developed.

On testing the set switch, I found the little cone-shaped plunger was shorting to the frame, thus completing the primary circuit through the pilot-light wires to ground. A new Cutler-Hammer switch cured the trouble

Some months ago, I received a call to service a late Sparton A.C. set which would not give sufficient volume on distant stations. It had been returned to the distributor, who pronounced it O.K. The owner was advised by one of my customers to get in touch with me. I checked the antenna installation and set, and found voltages and tubes good. At our shop, the receiver was found to work as it had done at the owner’s home; that is, with no volume on distance.

The condensers were checked for synchronization, and found satisfactory. On connecting the aerial to the R.F. amplifier input, signals came in loudly, but unselectively. This pointed to the tuning assembly. The inductances were tested, and found all right; but an ohmmeter showed a reading on the second condenser. Going along the insulation between rotor and stator on one side of the instrument with the test prongs, I found the approximate location of the leakage, but no discoloration. The condenser assembly was then put into an oven, and baked at a moderate heat for a couple of hours; after which a test showed no leakage, and the receiver worked wonderfully after being reassembled. The owner was delighted with this result, which seems to be permanent; he is again sold on his set, and also on our service.

I would like to say, at this time, that we wrote the manufacturers of Sparton for service manuals, and they informed us that these are supplied only to their authorized dealers. I believe that cooperation with Service Men by sending such data would not only help to give better satisfaction to the customer, but also aid the manufacturer in his effort to secure more sales.

VICTOR SETS—'24 DETECTORS

IT is undesirable to operate the Victor R-32 or R-45 with a ground connection to the aerial post; this throws 110 volts across the condenser bank, which it is apt to damage. On these sets, the volume control may be treated with oil, instead of sandpaper, if it becomes noisy.

When replacing a speaker cone in the Victor models, if the centering-screw washer is flat, replace it with one of the new-style washers with turned up edges. The older washers wear through the cone much more quickly with their sharper edges.

When checking these sets without meters, it is well to inspect the terminal connections of the Jones plug to see that a soldered connection is not loose. Turning the tone control too far down will cut down the volume, as well as supply a deeper bass.

On '24 type screen-grid tubes, loose caps have defied discovery during trouble shooting for poor volume; these connections may be faulty on new tubes.

In the new Sonora screen-grid models, every '24 tube will not work satisfactorily as a detector. Try each of the '24 tubes in this socket, in turn, before looking further for trouble. There will be a noticeable improvement in the reception when the best detector is found, enough to make this trouble worth while. The other tubes will work well enough as amplifiers.

The simplest things cause the most trouble. This was impressed upon me when I found that the antenna line in one Sonora 9-tube console set (of 1929 model) was cut through where it passed under the chassis—thus grounding the signals and shutting out all reception. Several Service Men had been up to investigate this receiver; they tested it with meters, took it to the shop for a week, and could find nothing wrong. I doubt if I would have found it so easily if I had not asked the owner when the set was serviced, and heard about my predecessors. I then came to the conclusion that the circuit must be all right and the trouble exterior.

SOME TROUBLES AND CURES

ABOUT fifty per cent of our radio trouble shooting is undertaken at the request of set owners who have paid professional radio men without having their troubles corrected. Here are five such cases we have encountered.

An A.C. console, bought by mail, which developed a tinny rattle, apparently in the chassis, had a speaker suspended from the grill opening by a single screw, and its vibrating frame was not in contact with the front of the console. Additional woodscrews took out the metallic ring; and a good clear tone was obtained.

On a similar job, lack of volume was reported at times, with only one station available. At other times, normal service; circuit and tubes tested O. K. The trouble was found in a '26 tube with a loose element.

A buzzing interference noise was ascribed to a universal motor in a beauty parlor near by. However, a 43-plate variable condenser, in series with the ground lead (inserted at a venture) took out all this noise without affecting volume. This was an A.C. job.

Baffling, persistent crackling in a speaker resembled static. It was finally associated with the fluctuating brilliancy of the dial light. This lamp was loose in its socket, and its vibration produced the crackles.

Fluctuating volume in an excellent new receiver was not associated with anything in the set. An A.C. meter in a wall plug led to the discovery that a house wire was loose from the contact screw of the wall receptacle, and the contact was affected by the vibration of refrigerating machinery near by.

We can make more money with steadier work, at ordinary electrical wiring. We have approached dealers a number of times, after listening to their complaints about inability to obtain satisfactory help, with the proposition to undertake their combined service and installation work. But we could never get as many as two to agree. There are too many dealers operating radio as a side line.

CONDENSER REPLACEMENTS

WHEN you find a Majestic or Atwater Kent with a shorted or open condenser in the power pack, do you put in a new condenser bank? It lists for $17.50 in the Majestic; and in most Atwater Kent models there is no provision for replacing the bank, the idea being to send back the whole pack. Usually the customer talks of buying a new receiver—of some other make.

It is better practice for the Service Man to repair the old set—both from the standpoint of profit and of the customer's good will. However, this must be done at a reasonable cost.

You do not have to open the Majestic condenser bank; here is the secret. Under the rectifier socket there is space enough for two 2-mf. condensers of certain makes—such as the Tobe "300" series. The highest load is 220 volts, and a rating of 300 is probably safe. The value of the defective condenser may be determined; if a 3-mf. section is out, use a 2-mf. and a 1-mf. replacement in parallel. It is a simple matter to cut out the ruptured section and connect the new condenser in its stead. Do not operate the pack without a normal load; the voltage then rises to 400!

In the Atwater Kent Model 40, the transformer, chokes and condenser are sealed in a sheet iron container, just a bit too formidable for the best can opener. The condensers and speaker choke are in the end opposite the rectifier socket. After determining that the condensers are at fault, remove the pack from the set and take off the terminal board on top. Procure a hammer and a six-inch cold chisel; wedge the latter between the base and sides of the pack at the condenser end, and use the hammer. The base is spot-welded to the sides of the can; cut the spots until the base is loose. Double it back upon itself and, with a piece of 2 x 2 for a punch, drive out the right-hand section of the pack from the bottom. Before you drive it clear out, cut any wires that do not break readily; they are on the top side just underneath the wax. With a small hammer crack the wax off the choke and condensers; it will be a sorry-looking mess. That funny-looking hedgehog affair is the speaker choke; save it.

It is possible to salvage part of the condensers; but not advisable, especially if you batter them badly in removal.

There are two alternatives: obtain a condenser-and-choke unit, for some of the later models of the "40," which were made with these components in a removable can, and with the same wiring code; or replace the condensers with others of suitable values. I have found these suitable: first filter condenser connected to the green lead with yellow tracer and the ground, 1-mf.; second, to green wire and ground, 1-mf.; third filter condenser, to red wire and ground, 2-mf. The by-passes on the detector and the first audio resistors are 0.5-mf.; the latter to the center tap of the 1½-volt winding. The

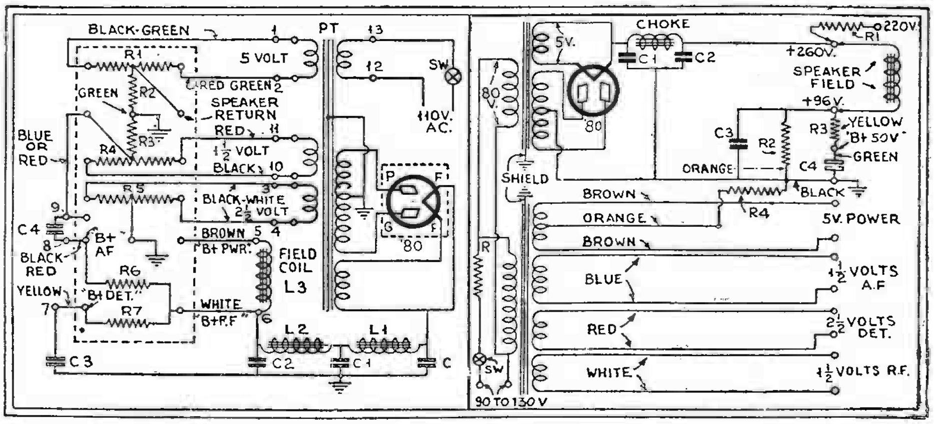

At the left, the A.K. "Model 40" power pack; there are minor changes in the units of the 37, 38, 42, 44, and 52, and the color code is not the same in all. At the right, the Majestic "7BP6:" C1, 2 mf.; C2, 3 mf.; C3, 3 mf.; C4, 2 mf. In the "7P6-7P3" they are respectively 2, 6, 2 and 2 mf.; in the "7BP3," 3, 4, 3 and 3. R1 is 1000 ohms, and the speaker field resistance is 2730 ohms.

speaker choke connects between the red lead above mentioned and the second terminal at the right (rear).

If the first audio or the detector by-pass is damaged, disconnect it at the terminal board and place a small by-pass condenser in the top of the pack to replace it.

SERVICING THE ATWATER KENT

IF the tone is distorted, and the volume bad, the plate voltages are low and the grid voltages high, on an Atwater Kent screen-grid model, a thorough checking of the "C" bias on the power tube will show an open in this biasing resistor, which should be replaced.

Recently a set of this model was brought in for repair; there was no voltage on the plate of the first A.F. tube. The continuity of the plate circuit was correct; a reading from the ground to the plate indicated that the cathode circuit was open. It was found that the nut holding the first A.F. biasing resistor to the frame was loose; and tightening it did the trick.

On several screen-grid sets, there was an absence of plate voltage on the '27s; though other sockets gave proper readings. On tracing the red wire from the rectifier, a drop of solder was found touching the frame of the set, near the group of three resistors.

A screen-grid set suddenly and irregularly cut its volume. We concluded that poor ground connections throughout the set were causing the trouble. After removing the R.F. coil shields, and tightening the bolt holding the solder lug to which one side of the R.F. coil is connected, the defect was remedied. If a "Model 55" or "60" cuts off all signals when the "Local-Distance" switch is in one position, and performs properly on the other, check the plate voltage to the first R.F. socket for an open circuit. You may find a poor solder connection on the primary of the second R.F. transformer, where the coil-winding ends are soldered to the rivet eyelets of the coil form.

The "Distance" switch condenser consists of two enamelled wires, about eight inches long, twisted together and encased in a rubber insulating tube. One of the pair is soldered to the switch and the other, at the opposite end, to a by-pass condenser terminal.

A dynamic reproducer was found to operate satisfactorily until a little volume was used; then it would stop. A break in the voice coil was found, and soldering this remedied the trouble.

On several A. K. sets employing magnetic speakers, choking was noticed on both vocal and instrumental reproduction. This was traced to the speaker filter condenser (the plate voltage on the last A.F. tube had fallen to 100 volts) and replacing this remedied the trouble.

NOTES ON VICTOR MODELS

IN Victor "R32" and "R.E. 45" receivers, hum is quite often caused by the "Radio-Phono" transfer switch. Tighten the two screws that hold the contact springs and insulation together.

A soft centre in the cone of the dynamic speaker causes a snapping noise on loud signals. It is generally necessary to replace the cone; although in some cases a round piece of adhesive tape, stuck over the weak center, overcomes the trouble.

A good method to center the cone is: remove the speaker from the baffle board, leaving the cable plugged into the power pack, set turned on. Loosen the screw in the center of cone. Remove first R.F. '26 tube to prevent signal coming through; then turn "Hum Control," on rear of power pack, to extreme left. Tighten center screw, and test by running your finger lightly around cone, near the rim. A uniform buzz should be heard on all sides. If tone varies, loosen screw, press slightly on one side, and retighten. Readjust hum control.

The leads to the record volume-control on "R.E. 45's" are held by screws, which often loosen, causing intermittent record reproduction. The loose lugs sometimes short, killing the phonograph section, or shorting it to full volume.

Ball or cage types of aerials are usually noisy on these sets, and it is best to change to single-wire aerials where interference is bad, or signals are weak.

SERVICING CROSLEY MODELS

ANY Service Man who has had occasion to service a number of Crosley screen-grid sets knows the inconvenience of partially disassembling the chassis in order to clean the antenna switch. This part, on the earlier models, was certain to give trouble periodically. However by mixing two teaspoons of Nujol with a small bottle of Vaseline, and placing this on all parts of the switch, the trouble will be remedied and will not return for a long time. If you will use a pipe cleaner, one end of which is liberally coated with this mixture, and insert it through one of the small holes in the bottom of the chassis beneath this antenna switch, you will find that the switch may be lubricated without even removing the chassis from the cabinet. Use a flashlight in order to see properly.

Crosleys, particularly the "Showbox" models, give some difficulty with poor connections to the rotor of the condenser gang. This may be remedied by loosening the set screws in the thick washer at the rear of the condenser gang, removing this and the other washers, and cleaning them thoroughly. Sandpaper them until bright and lubricate them with the Nujol-Vaseline composition.

If the socket prongs on these same sets become tarnished or corroded, giving poor contact with the tube prongs, this is easily cured by putting the same composition on the tube prongs; then insert the tube into the socket and work it around a little to spread this material.

In the case of late Crosley models, as well as sets of some other makes using '45 power tubes, a peculiar sound similar to motor-boating is frequently caused by gassy "45" tubes. Replace one or both of them and the trouble will stop.

Another peculiar thing I have found several times; the bolts holding down the base of the dynamic speaker, because of irregularities in the surface of the wood beneath the base, had drawn the speaker frame out of shape and caused the voice coil to rub. Slightly loosening one or two of the bolts allowed it to return to normal.

NEW VICTOR MODELS

IN the new Victor models, the "35" and others there is no variable hum adjuster. If there is abnormal hum, inspect the '45 center-tap resistor (R15) which is immediately underneath the '45 sockets. The '24 center-tap (R11) is underneath the terminal connection board; each has a resistance of 55 ohms. Bad detector and A.F. tubes, and open connection to ground will cause hum. Watch the 0.1-mf. condensers in the chassis.

If there are no voltages in the set, inspect the fuse. It is located in a small box on the left of the amplifier, looking from the back, and is of the 1½-ampere auto type.

The adjusting screws for the tuning condensers are found underneath the small circular plate, which is screwed to the cast-iron plate on the chassis. There are five sets of five screws, one set for each condenser, and one adjusting screw for each frequency.

The long narrow rectangular cover on the right side of the amplifier contains the terminal strip, the connections of which are shown A cable leads into this box. All screw-terminal connections should be tight, or trouble will occur.

In the phonograph models, there is occasionally a case where the motor refuses to start. In nine times out of ten, it is because the switch beside the motor is not making contact. This switch has a long thin arm, and one end rests upon a stud or finger near the front of the set. This statement also applies to last year's models.

This writer has lately completed the designing of a new, complete set analyzer. It embodies the new copper-oxide-rectifier meter; has six voltage and six milliammeter and ammeter ranges, controlled by a single switch. There is an ohmmeter of three ranges, an A.C.-operated tube tester with an oscillation-testing feature, and a modern R.F. oscillator. This oscillator will work at five frequencies in the broadcast band, and at the low frequencies for use with the modern superheterodynes.

VICTOR SERVICE NOTES

ONE of the most constant sources of trouble, that I have found in the old-model Victors, is the breaking of leads to the voice coil on the dynamic. The diaphragm of this speaker is held around the edges with very thin rubber, and the diaphragm moves further than in other speakers of this type. This trouble can be located very easily; there is no sound whatever from the speaker, although the tubes light. If these leads are lengthened with some flexible wire, the trouble will not occur again for some while.

One of my customers, who owned a Victor, complained that, while in the daytime he could not get the stations he used to, at night he could hear hardly at all. Upon examination I found a weak '80. In the daytime the light-line voltage was high and, though the tube was weak, it gave some current; but at night, when the load on the line increased, there was not enough voltage to work the set properly, causing the trouble mentioned.

On this model, there is a tone control

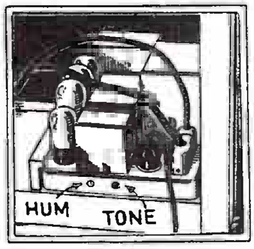

Fig. 3
In recent Victor models, a tone control is mounted in the pack, so that the Service Man can adjust the set to his customer's ears.

on the power pack. I find that many of my customers do not know this, and I instruct them in the method of using it; this helps to get their service call.

The Victors that are equipped with phonograph often need servicing. If the reproduction sounds low and faint, the trouble may be located in the pickup. The armature, which is supposed to move freely, sometimes gets out of line, and sticks to the side of the magnet or touches it frequently. By resetting the screws, found in the head of the pickup, this trouble can be cured. In one other case, where there was no sound at all, the trouble was located in the volume control; the operator had turned the control too far, and it had lodged between the two stops and remained there.

KYLECTRON "K-70"

ABOUT 75% of the Kylectron "K-70" sets, manufactured by the United Reproducers Corp., which I have been called upon to service, have been troubled with a short in the .08-mf. condenser coupling the first A.F. '27 with the grids of the '45 tubes. When a replacement condenser is lacking, a speedy and oftentimes permanent repair can be effected by utilizing the unused primary of the push-pull transformer, the secondary of which acts as a grid coupling choke.

To do this, remove the defective condenser from the circuit, and break the plate connection of the '27 tube at the 20,000-ohm resistor. Then, connect one end of the unused primary to the plate and the other end to this resistor.

Many of my customers have said that this method of coupling the circuits gives a better tone to the set. Personally, I cannot tell any difference; but who am I to disagree with the customer?

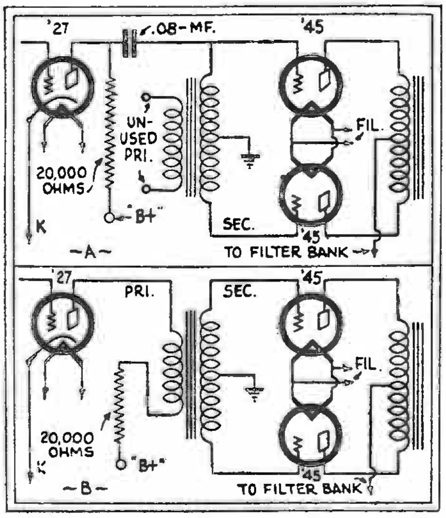

The resistance-impedance coupling in the Kylectron uses a push-pull transformer's secondary as a choke. A repair restores the original purpose of the transformer's primary.

A HOT AERIAL—OZARKAS

ONE morning a service call was received from a man who wanted to know if we could fix a radio that had caught fire inside the cabinet. I thought that fire inside a battery set was unusual; so I immediately went to his home. He lived alone, in one room, and the aerial of bare wire was strung about the place on porcelain nail-knobs; an A.C. extension cord, from a light fixture in the center of the room, was supported by one of the knobs. The "B" eliminator was turned on and off at the light socket and, each time, the cord was moved a little until the insulation was frayed. On the night of the fire the A.C. cord had touched the bare aerial wire and shorted to ground through the set; and the first radio-frequency coil started to burn before the fuse in the building blew out.

An Ozarka "89 A.C." had a hum above the usual level, and other Service Men had found no success in reducing it; so the owner had packed the chassis to return it to the manufacturer. After agreeing to charge nothing if the hum was not reduced, we tried by-passing, chokes, filtering, etc., with no luck. Finally, we removed a terminal strip, to trace the leads, and found a 28,000-ohm resistor connected to the 1.5-volt center tap but no lead from the other side. Putting a wire on it, we tried ground and other connections; when it was connected to the first-audio and radio-frequency "B+" terminal, the hum almost disappeared without decrease in set volume. The owner was well pleased.

Heater elements of the electric-bowl type make good A.C. current ballasts for reducing motor current drain. They pass about 6 amps.

ALL AMERICAN-MOHAWK "C6"

WHILE there were comparatively few of these receivers put into circulation there are enough, perhaps, to warrant a few words of explanation to any readers who might be called upon to service one.

The R.F. end is simple enough and contains no unusual features; but, by glancing at the accompanying diagram, one can easily see how much trouble and inconvenience the audio circuit might cause the Service Man if its connections were not anticipated or understood.

It will be noted that the output transformer is of special design, containing an additional secondary winding which supplies to the grid of tube "B" signal energy in proper phase relation to that of tube "A."

Also note that, while to remove tube "A" will make the system inoperative, to remove tube "B" will not stop tube "A" from passing the signal on to the speaker.

Should it become necessary, for any reason, to remove or replace the output transformer, care should be taken to see that the various leads are connected as indicated in the diagram. The colors refer to a small tracer, woven among the strands of wire making up the leads of the several windings. Failure to observe these precautions will result in greatly reduced volume and poor tone quality.

The writer ran across one of these sets wherein the output tubes were connected in parallel; which serves to remind us that, in the event of failure of the original transformer, one of the more conventional components of proper characteristics, may be substituted, if the former type is unobtainable.

OSCILLATION IN BOSCH '28

THE trouble, to start with, was oscillation of the radio-frequency amplifier. I went through the usual procedure in neutralizing; but when I had finished the radio-frequency amplifier would still oscillate in the middle of the dial scale. It was perfectly neutralized on both high and low frequencies but in the middle it whistled merrily. Upon close examination it was found that the oscillations were in the detector circuit, and not in the radio-frequency amplifier, as at first believed.

This was an entirely different matter and the detector circuit was subjected to close scrutiny. It seemed funny that the detector should oscillate, because there was no feed-back or regenerative circuit.

As the diagram shows, the detector plate by-pass condenser C is on the audio transformer side of the radio-frequency choke and therein lies the whole trouble. This particular choke happened to be just right, so far as inductance was concerned, to act as a tuned plate coil and cause the detector to oscillate in the middle of the broadcast band.

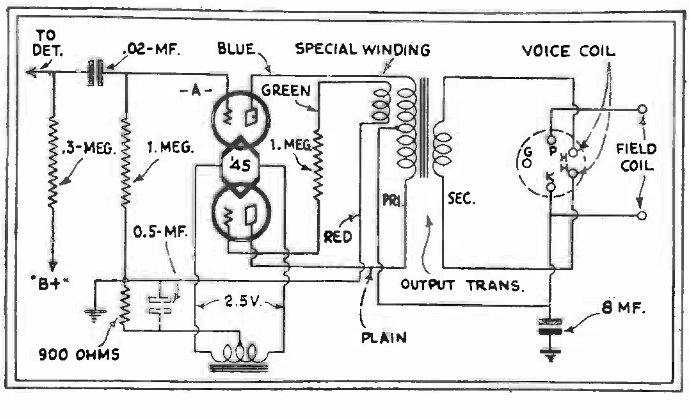

The unusual output arrangement of the Lyric "C6" receiver comprises two power tubes which are not truly in push-pull, but have a similar effect. Compare with the Museum audio amplifier on page 675. (The lower '45 is tube "B" in the text.)

The solution is simple, once the trouble has been found. By connecting a .00025- or a .0005-mf. fixed condenser C1 from plate to ground on the detector tube, the choke is taken from the radio-frequency circuit and the oscillation stops. The additional capacity will not affect the tone quality enough to be noticeable. The dotted lines on the sketch show where the additional capacity is tied into the circuit.

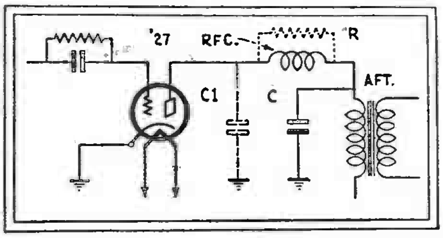

It is always good practice to let the output R.F. component get back to ground as soon as possible. (Resistor R appears in the service manuals of the Bosch "28".)

SOME SET PECULIARITIES

OTHER Service Men may be interested in these few kinks: In replacing the dial-drive cable on a Majestic, the gang is removed from the chassis by unsoldering five wires and taking out the three bolts in the bottom of the gang. The dial assembly comes with it; it is then easy to put on the cable.

In Fada models "50" and "70," trouble may be found from open grid suppressors of the wire-wound type. If they are replaced with carbon resistors, the trouble is remedied.

Noisy volume controls, in Victor "R-32" and "RE-45" may be made smooth by rubbing the resistance wire with a pencil eraser, or putting vaseline on the wire itself.

Some Majestic models become noisy, or cut off while in operation, as if the aerial were broken. Look for wires coming unsoldered from the R.F. bypass condensers in the chassis.

MAJESTIC SETS

THE Majestic "70-72" series, exceedingly popular two years ago, has now arrived for its share of service by the independent Service Man. This article is written with the thought of saving him much time in locating the most common faults found in these receivers.

First, we will take the speaker. Assuming that the two power tubes are evenly balanced, and that a flat, buzzing signal is emitted, the following will usually be found: grit between the polepiece and the voice coil: the sealed edge of the cone partially open; the voice coil off center at the apex; or the small tabs holding the voice coil to the cone may have loosened.

We have had several receivers of this model in our shops, with no filament voltages in the radio-frequency and detector stages; as a rule, the cause was found to be pitch oozing out of the transformer and causing a high-resistance joint at the filament lugs. This is remedied by using a hot soldering iron on the terminals and boiling out the pitch; which may be wiped off with a rag and a new joint made.

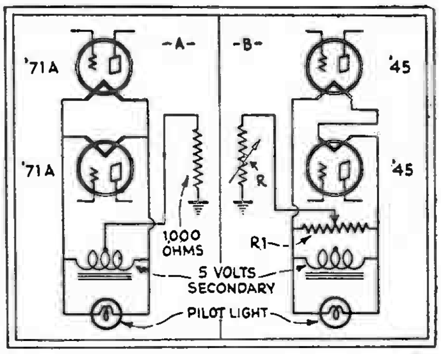

The combination of series-filament tubes in push-pull is not completely balanced; but the circuit tends to equalize the effect of differing grid biases.

REWIRING MAJESTIC SETS

MUCH has been said and written about extra dividends for the Service Man. There is, in many a home, a set which is giving the owner a good deal of satisfaction but is not up to date; among these will be found the Majestic "70, 71, 72" series. This model used '71A tubes in push-pull; usually the quality of reproduction is not faultless. It is a simple task to rewire the last push-pull stage so that the filaments are in series; a pair of '45 tubes may then be employed. The winding will supply sufficient current to operate these tubes satisfactorily.

The biasing resistor for this stage is located in the pack; it may be replaced, at R, by a "Type C" Electrad resistor, which may be adjusted until the tubes get the proper bias. The resistance value will depend upon the plate voltage available: if the voltage is about 200, place 35 to 40 volts on the grid; if it is above 220, 45 to 50 volts will be needed. Line voltages and the efficiency of the rectifier vary in different sets.

IMPROVING A.K. "35"

THE volume of an Atwater Kent "Model 35" can be increased over two hundred percent by installing an antenna coupling transformer of the type used in the "Model 42" or "44." Remove the antenna choke and the antenna binding post; then cut off part of the spring contact to the grid prong of the first R. F. socket so that, when the antenna post is replaced, there will be no connection between it and the grid of the first R. F. tube. The antenna coupling transformer is connected between the grid of this tube and the ground, with the center tap going to the antenna post. The transformer can be mounted under the first variable condenser by drilling a hole through the metal subpanel and bringing the two leads through the holes left by the choke coil.

With this arrangement this set will work very well as an automobile set, if the plates of the R. F. stages are changed over to the "B+" lead of the last audio and given 135 volts. This increased voltage is necessary to compensate for the small antenna used.

If there is any complaint of this set being broad on the low frequencies, be sure that the variable plates of the condensers are meshing properly.

CANADIAN SERVICE NOTES

WHEN it is necessary to "pull" a DeForest Crosley "Serenata" model (two-volt) chassis, it looks as if many wires have to be unsoldered. Not so. Unship the filament switch and rheostat at the lower right of the cabinet and also the "local-distance" switch at the rear. Disconnect the filament voltmeter at the bottom of the cabinet and pull the wires through the speaker supports. Disconnect the speaker by removing the screws through the lugs on the wires; and all the loose wiring can now be pulled through the hole under the chassis in the cabinet shelf. The hole is just big enough to pass the rheostat and switches. While it may look quicker to unsolder the wires it should be remembered that, if the chassis is being taken to the shop, it is still necessary to remove the rheostat and switches and that they will have to be soldered up again at the test bench.

As not much information is available on the Mercury "Super Ten" Superheterodynes the following may be useful.

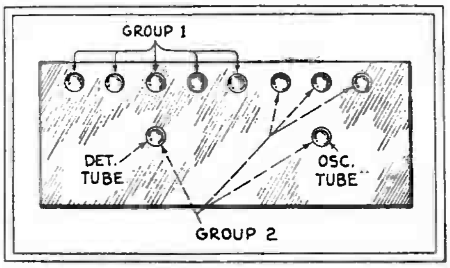

Fig. 6
The Mercury "Super-Ten" has two series circuits of 1.1-volt "N" tubes, working from a 6-volt battery.

These models employ ten "N" tubes in series-parallel to operate from a six-volt filament battery; the two groups are shown in Fig. 6. Total filament current is 0.5-amp. Complaints of intermittent reception from owners of these receivers have been found due to the loosening of the bolts holding the fixed condensers in the intermediate amplifier unit, no lock washers having been used here by the manufacturer. This slackening up allows the gear to short on the copper case. No trouble will be experienced when re-assembling this unit; as all the coils and condensers comprising the five stages are of fixed value. There is nothing to adjust.

A HINT OR TWO ON PHILCOS

SERVICE Men have, no doubt, had trouble in locating the cause of very weak reception of all but strong local stations on Philco "Neutrodyne-Plus" sets where, upon checking the set with a set of analyzer, all voltages with the exception of the grid bias voltage on the first R.F. tube were O.K. The first R.F. tube showing no grid bias, and the second and third R.F. showing grid bias (whereas all tubes get their bias through the same source), tells us that there is an open in the secondary of the first R.F. circuit. A continuity test of the secondary shows it closed; this

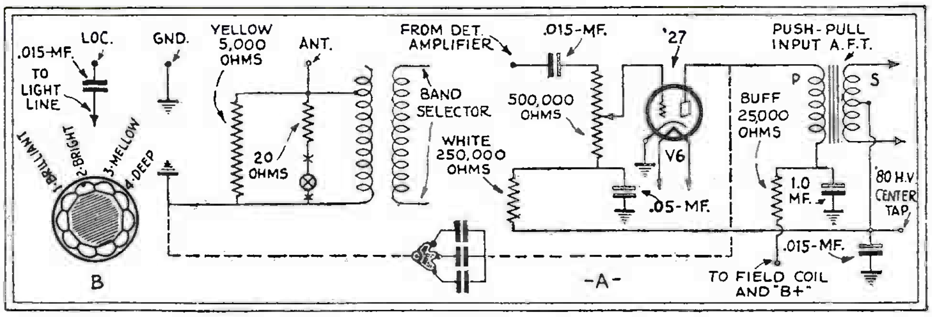

Fig. 2
The Philco tone control may be introduced into an earlier model conveniently, wherever the "local-distance" switch may be dispensed with to provide a place for panel mounting.

leaves only the range control, which is a small variable compensator across the first tuning condenser and functions as a "local-distance" switch when turned all the way to the left. Examine the range-control spring for an open from the stator to the spring. If the spring does not make contact to the stator, when not in "local" position, no grid bias is applied to the first R.F. tube; and the set will not bring in anything but strong locals. In most cases tension can be restored to the spring by bending with a pair of duckbill pliers, or install a new range control (Philco Part No. 3133).

When cases of oscillation in the Philco N-P sets cannot be cured by neutralizing, the trouble is usually caused by an open R.F. plate condenser in the plate resistor-condenser cartridge. The easiest way to test this is to remove the grounding screws and lift the cartridges so the condenser of the unit is not grounded and test the condenser with an A.C. voltmeter in series with the light-line. Open condenser will show up by not giving a reading. If a Philco part is not available, an .05-mf. condenser can be shunted from ground to the resistor-condenser terminal. Reground all resistor-condenser cartridges, replace bottom pan and re-neutralize the set; and you will find the oscillation is cured.

Upon investigating some complaints of noise in Philco "Models 95-96-76-111-77," where the volume was fairly loud, it was found that the primary of the R.F. transformers was the cause of the trouble. The primary is a small coil inserted inside the bakelite tubing at the bottom of the transformer (meaning the end away from the bracket) and is wound with very fine wire. In nearly all cases, it has been found that this fine wire has been broken and only lies against the terminal. When the volume is turned up, the vibration of the speaker causes this wire to make and break contact; resulting in a very disagreeable noise at the speaker. In cases where the wire has broken at the outside terminal of the primary spool, it is only necessary to unwind one turn of wire and then connect and solder to the terminal; leaving a little slack so the wire won't break again. If the break is at the inside terminal, it will be necessary to install a new R.F. transformer unless the end of the broken wire is long enough to resolder.

The tone control used on the "96-111" series can easily be installed on the "Model 95" by doing away with the "local-distance" switch. Cut off the wires leading from it at the small 20-ohm resistor which is located on the antenna coil; then remove the switch. To install the tone control, bend the lip on the chassis (which held the "L-D" switch) forward to allow the shaft to enter hole in lip. After entering shaft in hole, bend lip back to original position and fasten tone control in position. Run a wire from the terminal on the tone control, to plate of first A.F. tube, and installation is finished. The tone control is Philco part No. 4037A, and is only 65 cents list price.

OLD MODELS—AND BAD TUBES

IN an Atwater Kent early model electric set that is dead, when no plate voltage shows on the detector tube, it is probably due to the phone condenser which is connected from plate to ground; this is either shorted or leaky. Remedy by replacing. The first diagnosis is, naturally, the resistor in the power pack or the primary of the first audio transformer.

In an old model Steinite series-filament receiver, that would not tune above 30 on the dials, the trouble was traced to a short-circuit in the third variable condenser. (This short was in the bearing, and not in the plates touching.) This resulted in the last tube on the chassis being cold. The remedy was to rewind the primary just like the original, and find and correct the short-circuit.

In the Sparton "Model 89A" a baffling problem presented itself in that the volume control was of no effect. The control was not at fault, but a tube was found with a leak between the heater and the cathode. This often happens in new tubes, and a wise Service Man will check very carefully on this item first.

In using a set analyzer remove the tube very carefully, so as not to jar it in any way, and insert in the analyzer; if the tube is jarred the leak may not show up. Perhaps the better way is to remove one tube at a time from the radio-frequency can, and try the volume control with the set analyzer plugged into one of the sockets. When the leaky tube is located the volume control will function; and you will see that the plate current can be controlled from zero to about six or seven ma. (Never have more than one tube out of the circuit at any one time; otherwise a damaged tube may result.)

A Starck old-model electric set would not tune anything with the aerial and ground connected in the proper way. This was found to be due to a short-circuited primary on the first radio-frequency transformer, and remedied by rewinding or replacing the transformer.

Many fading problems may be traced to a cracked filament in a '27 detector tube; watch this tube and you will see it light up and then go out when it gets hot.

Also, fading and weak reception may be traced to the lightning arrestor's being shorted or a broken connection at the terminal. Moral, test this first when a set lacks volume or, especially, if it will not tune on the higher wavelengths.

A resonance hum on push-pull output is not always coming in on the power lines and, often, you will find one of the power push-pull tubes out; this manifests itself by a decided hum when the receiver is tuned to one of the low wavelength stations. See that the tubes are both working.

"GLORITONE" MIDGET

BEFORE trying to balance any midget receiver, see that the ground is good and that the tubes are O.K.; this is especially true of the "Gloritone 26P" shown in the diagram. If this cannot be balanced after checking ground and tubes, look to the bypass condensers in the block. Replacing the 0.4-mf. unit bypassing the cathodes with a higher capacity may produce an improvement. This chassis differs from the "26" only in the changes necessary to use a '47 pentode instead of the '45 power tube.

In the Majestic "Model 20" chassis (used in the "21," "22," and "23" receiver) calls

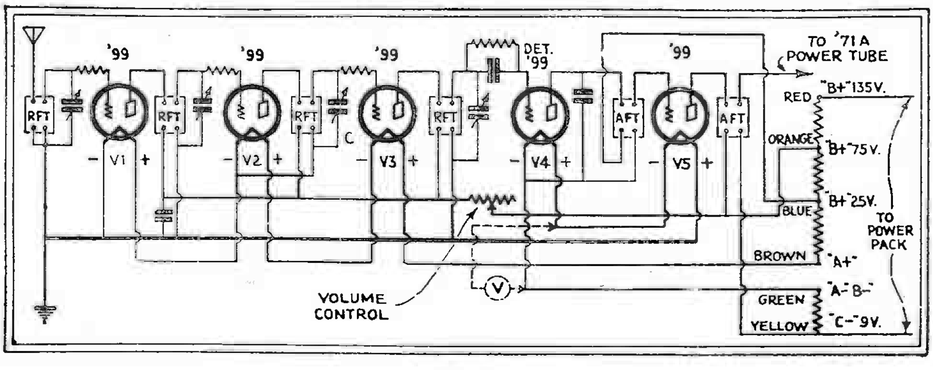

Fig. 1
This diagram of the tuner of an old Steinite model ("991," "992," "993") shows the series-filament arrangement.

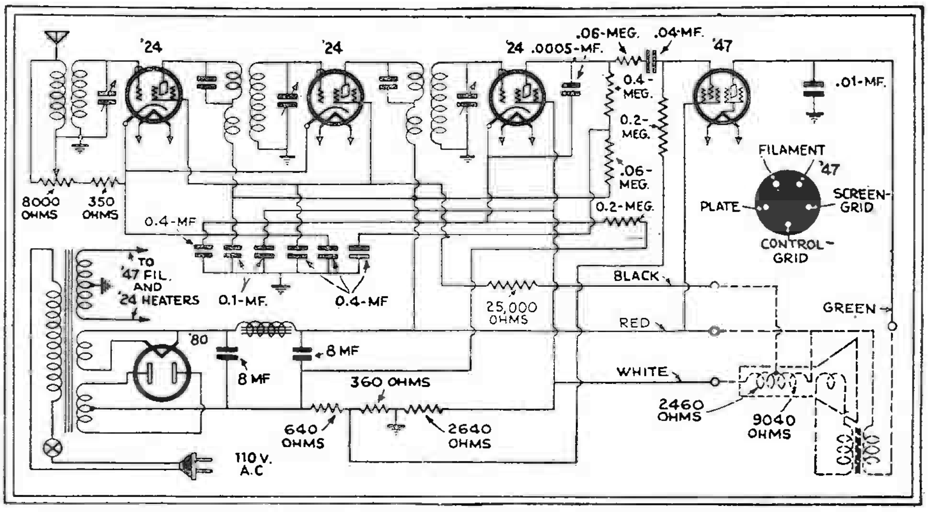

Circuit of the "26P" Gloritone, manufactured by the U. S. Radio and Television Corp. This is a midget using the new '47 pentode, the socket connections of which are shown in detail as they appear from above.

have been due to a defect in the one-microfarad condenser across the 275-volt filter output. (*This unit is attached to the red connection, nearest the rear, in the assembly at the right end of the chassis.*) Since several parts are fastened to the bottom, it is necessary to remove the few screws holding the ends to the chassis, and take these out, to get at the defect. If the set owner is unwilling to bear the cost of complete replacement, since many good parts are housed with the defective condenser, mount a cased or uncased component external to the unit.

If a lack of plate voltage is shown on the detector of an Atwater Kent "Model 37" (or "38") application of the iron to both ends of the metallized resistor may effect a repair.

A SHUNTED DIVIDER

SOME fellow Service Man may be saved some of the grief that I experienced with a Majestic "20" which came into the shop dead. I replaced the second detector's cathode resistor, and the set performed beautifully at low volume; but when the volume control was advanced, the distortion was terrible.

The analyzer showed a screen-grid voltage of 42. After about half a day, I found that a small piece of wire was imbedded in the pitch on the voltage divider, between the 90-volt tap and the center-tap of the '45 filaments. Removing this cleared up the trouble.

When disassembling this chassis, remove the end plates first; you will then see how many leads have to be unsoldered before pulling the bottom pan.

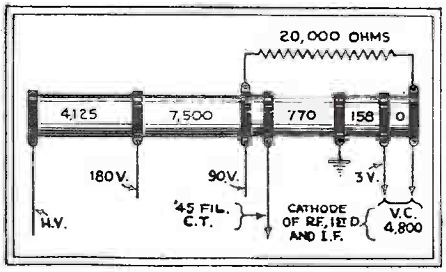

Voltage divider of the Majestic "20."

A PHILCO ADAPTATION

DURING these rather trying times, the Service Man may make himself an honest dollar with the following stratagem; the use of which, however, is limited to battery sets using the UX- or UV-199 type of tube, and the "AB" Philco eliminator controlled by a relay switch. In this case it is assumed that the 4-volt storage battery is losing its ampere hour capacity; and the owner does not wish to spend seven or eight dollars for a new one, but is willing to spend some money to keep the set working a little longer until he can trade it in for a new one.

Permanently close the relay-switch circuits, which control both the battery-charging secondary and the plate-voltage supply secondary. Do not bother the filament relay coil circuit. Next, break the 110-volt primary circuit at some point on the line cord, and connect the opened terminals to the former plate relay switch contacts; in such a way that, when the set filament switch is closed, the 110-volt primary circuit is closed and both the battery charger and plate supply are in action together. Thus, the battery acts mainly as an electrolytic filter, and as such has a much longer life.

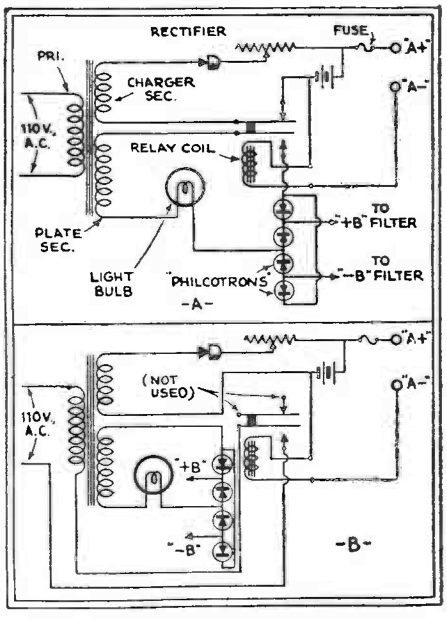

Above, the original Philco circuit, with charger circuit closed and "B" lead open.

I used the same idea for several years on my Pressley '01A-type superheterodyne, with a Brach relay switch which had both the charger plug and the B eliminator plug inserted in its "B-Supply" receptacle. I used a Balkite 3 amp charger. There was very little hum present due to the fact that only one stage of audio was plugged in. However, the hum is not particularly objectionable even with two audio stages as used on the average receiver.

THE OVEN TEST

A BREMER-TULLY "Model 8-20A" set had been returned to the factory, and to several Service Men; and I had worked on it several times before. It would run about two hours and then shut off; there was then no detector plate current. This trouble was not experienced when the chassis was out of the cabinet; it would run perfectly under test for days. All readings were perfect. Finally, I found a fault in the plate coil; but when it was taken out, it again tested O.K.

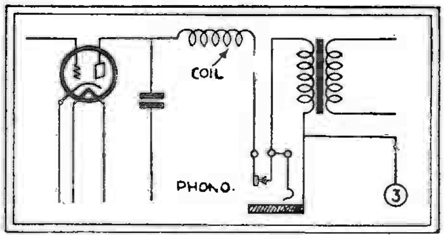

I then decided that heating caused the trouble; I placed the coil in the oven and, when it was hot, I tested again and found it open. I then discovered that the fine wire was broken in the soldered joint; when it became heated, the connection opened. I hope that no other Service Man will have as much trouble as I did to find the source of similar trouble.

ATWATER-KENT CONDENSERS

IF the condenser of the audio output filter in Atwater Kent models, such as the "38" and "40," becomes shorted, choky signals and burning-out of the '71 output tube, or its 1800-ohm bias resistor may result. A continuity test will show a short from the inside speaker binding post to the plate of the output tube socket.

A repair may be made, without dismounting the chassis, by removing the cover of the pack; unsoldering the green wire with yellow tracer (second from the left) from bottom terminal strip; and connecting a new condenser in series with the shorted unit. There is room in the pack for a larger and better component; and a higher capacity will measurably increase the low-frequency response, especially with a dynamic speaker. It is wise to turn the lug under the speaker binding post, and solder it to the plate prong of the 71's socket; thus eliminating possibility of trouble from the old condenser.

SERVICING RADIOLAS

IN repairing various types of R.C.A. Radiolas, I learned my greatest lesson on a "21." This set oscillated very badly, even after checking the tubes and testing with new tubes in both screen-grid stages. I removed the shields and, in doing so, the control-grid connection of one of the screen-grid tubes touched something—and the three '71As lit up and in unison departed "this here life"! It was lucky that removal of the '22s was necessary before the shields could be lifted, or I would have been one sick boy. As things were, I was sick enough.

After cleaning the shields and doing everything possible to remove the oscillation, as directed in the R.C.A. service notes, my work was for nothing. The set still produced oscillations all over the dial; to be honest with you, I believe that after all my work it was worse than ever.

At last I conceived the bright idea of moving the regenerative coil (in the detector circuit) a short distance from its mounting by the use of several cardboard washers and, at last, I ascertained the happy medium between oscillation and loss of sensitivity.

The variable condensers on the "R21" and other R. C. A. sets are very fine for obtaining maximum sensitivity and real aligning; inasmuch as they have on the rotor split outside plates which can be bent just as you want. You can have your condensers match at every degree of the dial.

Again, I was called on a service job by a customer who had just purchased a new Radiola "46," which would not produce any signals whatsoever. In my hurry I forgot that I was out of '24s; and I arrived at the customer's home to find a '24 tube with a short from screen-grid to filament. An odd short, isn't it? To give him operation for the evening, I replaced the tubes in their respective sockets, except that for the first stage which I left vacant. I connected the aerial to the control-grid cap of the second R. F. tube. This is not a good idea for operation, for any length of time; the voltage runs a little higher when one tube is removed, no matter how well the filament transformer is designed. Resistances in the circuit play funny pranks.

On a call to check interference in an "R80," I found a '24 tube with elements that shorted at times. Walking across the floor would start it, and it seemed to keep up the noise for a considerable period of time. The cause of this noise was not as easy to discern as it sounds; and I believe that a Service Man should tap the tubes as a first test for interference in this type of set.

IMPROVING RECEIVER OPERATION

THOSE service men who wish to improve the operation of the seven tube Federal Orthosonic receiver at a very low cost, may make the changes outlined below which resulted in a decided improvement in operation over that received prior to making the change.

This receiver uses the BA Raytheon tube for rectification, and consequently the slightest change in line voltage manifests itself in corresponding changes of the filament voltages and current of the '01A tubes whose filaments are connected in series. By substituting two '80 tubes for the Raytheon as shown in the diagram of Fig. 2, the hum experienced with the old mode of connections entirely disappeared and excellent stability of operation was secured.

The five volt winding for the pilot lamp is used to supply the filament of the '80's and there is sufficient room in the power unit to house the two new tubes. The cost of the additional parts necessary for the change is negligible compared to the increased satisfaction secured.

Incidentally, if a small coil, tapped in the center, that will match the tuning condenser is used in the first stage instead of the loop, and is connected to a short aerial, an increase in the selectivity and distance received will be noted.

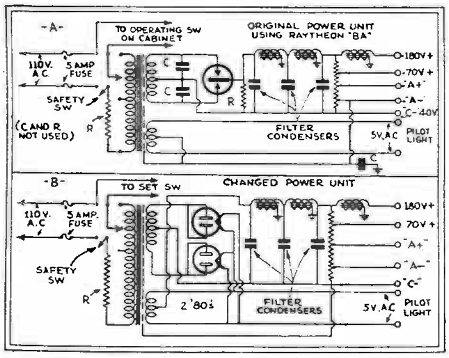

Fig. 2

By replacing the BA Raytheon with two '80's, the operation of the Federal Orthosonic receiver is much improved. The three condensers marked C and the resistor R, which are used in the original circuit, are not needed after the unit has been rewired as shown.

"ZENITH 16E"

I WAS called in lately to service a Zenith "16E" which was performing unsatisfactorily. The set, after a few minutes' operation, would stop playing and start to hum. A few of the locals could still be received, but with a very blurred tone. After a few minutes of tube testing, I found a defective '26 tube in the first audio stage, and thought that I had finished then and there; but more was to come. The owner complained that several '26 tubes had burned out in the first two audio stages, and that, quite often, several of the filament circuits would not light. Furthermore, since the visit of the last Service Man, the performance of the set had not been quite up to standard.

An examination of the set revealed that the filament voltage of the '26 tubes used in the first and second audio stages was 1.65; which was obviously too high. The plate voltage of the '27 detector tube was 150, about that of the R.F. and A.F. amplifiers. The other defect was uncovered by moving the plug from the power pack sidewise in its chassis receptacle; this caused the tube filaments either to grow dimmer, to grow brighter, or to go out, according to the position of the plug.

I learned from the owner that the previous service man had discovered a defective 1-megohm resistor in the detector plate circuit and, instead of replacing it, had merely shorted it out of the circuit. The insertion of a new resistor in this circuit brought the plate voltage down to the normal 50, used in the grid-leak system of detection.

The 1.65 filament voltage of the two audio tubes was cut down to 1.45 by the insertion of 3½ inches of No. 22 German silver wire in each leg of the filament circuit of these two tubes. Current is furnished to these tubes from the same transformer tap that supplies the '27 with current. However, the resistance wire used to cut the voltage down to the proper potential for the '26 tubes was insufficient; hence the addition of the extra wire.

My method of guaranteeing constant filament current to all circuits was tedious but effective. I soldered six four-inch pieces of wire to the filament terminals of the chassis receptacle, and did the same to the corresponding terminals of the plug from the power pack. I then tied together each pair of the corresponding wires and taped them. Soldering the connections might have made a better contact; but it would have been inconvenient, in case the set had to be moved.

The set has worked well since and the customer is satisfied. A lot of work, but a good result.

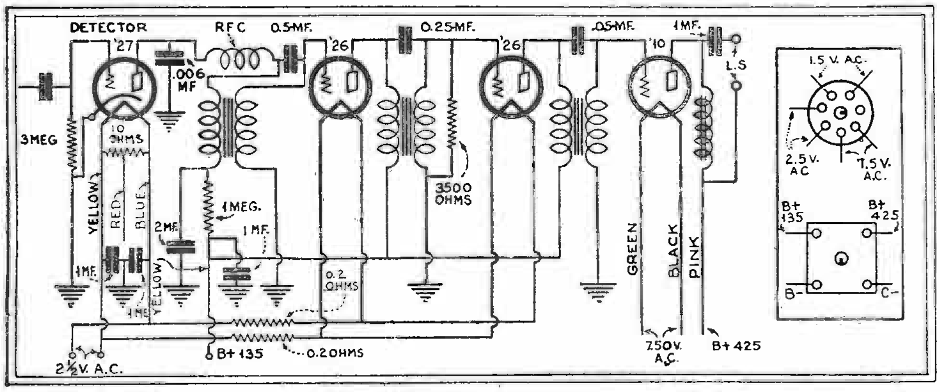

Fig. 5

Above, the schematic of the detector and audio circuits of the Zenith "16E" in which the '26 filaments are fed from the detector 2.5-volt winding. At the right, the arrangements of the plugs connecting the chassis with the power pack of this model.

REPAIRING CONES

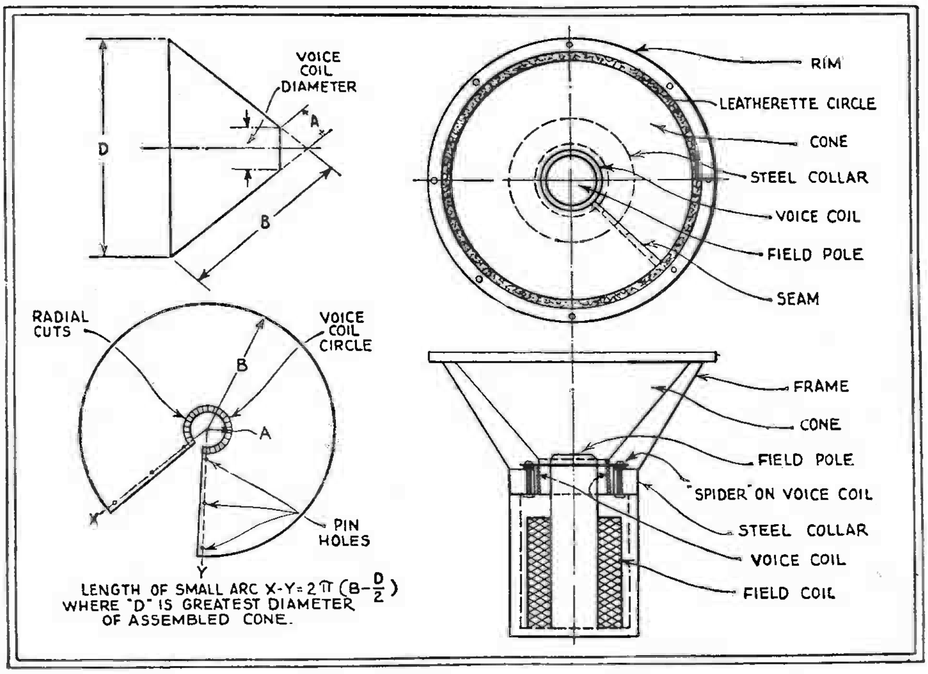

Fig. 1, upper right. *The old cone is cut from the leatherette which holds it to the frame.*

Fig. 2, lower right. *Cross-section of the speaker showing the location of the spider.*

Fig. 3, left. *The old cone flattened out which may be used as a template. The upper sketch aids in illustrating how the cone openings may be calculated.*

THE Service Man will now and then have a set to repair in which the cone of the speaker, or even the voice coil, has been damaged. In many cases, he may find that he cannot get the cone without sending to the manufacturer. Or the manufacturer may insist on doing the repair job himself. Either situation means loss of time and profit, and possibly a dissatisfied client. Yet a bit of ingenuity will get around many of these service calls if the repairman will follow the procedure outlined below.

Doubtless, many Service Men have tried to lay out patterns for cones, only to find on assembling that the cone was a bit larger or smaller in some dimension, rendering it useless. The method as outlined will reproduce the cone exactly, if it has no corrugations or other features impossible to produce with a sheet of flat paper, scissors and cement.

Paper of the same quality as that used in the cone may be bought at the stationery store in the size 2 by 3 feet for twenty cents or less. In cones ten inches or larger of the dynamic type, the use of a heavier paper tends to accentuate the low frequencies. For smaller sized dynamic cones, the use of heavier paper merely means more difficulty in handling.

The cone which is to be duplicated should be separated from the rest of the speaker as intact as possible. A sharp knife or razor blade will usually suffice to open the joint between the cone and the leatherette rim which usually holds it to the frame; this is illustrated in Fig. 1. A bit of ether applied with a small brush will help to soften joints in which the "dope" has become too crusty for the knife to cut. It will probably be necessary to remove the fiber "spiders" which center the voice coil around the field pole, as shown in Fig. 2. Note carefully their positions on the coil by a scratch or measurement, as well as the point of attachment of the coil itself to the small end of the cone. The seam of the cone must be opened before it can be stretched out flat to make a pattern. Before this is done, however, the seam must be "pinholed."

That is, in order to reassemble the new cone pattern accurately, a small pinhole is made in each end of the seam and a third midway between them, all, of course, on the seam as shown in Fig. 3. The seam may now be opened, care being taken not to mutilate either the edges of the seam or the pinholes. Use a bit of ether if the seam proves obstinate.

When spread out absolutely flat, the cone now looks as shown in Fig. 3. Usually, a small flange on the cone (used to fasten on the voice coil) is so saturated with "dope," that any attempt to flatten it will result in cracking off the flange, which should be allowed to stick up.

Marking the New Paper

The new sheet of paper should be placed on a flat wooden surface and the old cone placed on top of the sheet, and both flattened out by the application of heavy objects such as flatirons, plate glass, etc. There are now six pinholes, 3 in each edge. Through each of these, pass a thumb tack straight down through the new sheet and into the wood. With a sharp, soft pencil, the outlines of the cone may be traced, supplying, where necessary, any of the outline obliterated by the razor blade.

The small inner circle should be traced *very carefully* as the fitting of the voice coil depends on its accuracy. In addition, a third circle of a radius about 3/16-in. less is traced by a compass inside this one, in order to make the flange, if one is required. When the outline is complete, the thumb tacks are removed and the pattern cut out with sharp scissors (small surgical scissors are very good) *on the line.*

It may be impossible to trace the voice-coil circle accurately due to raggedness of the surface. In this case, draw in a circle using a compass with a radius a hair's breadth larger than that of the voice-coil circle, as measured on the flattened pattern. If the pinholes on the seam have been made in a straight line, it will only be necessary to extend the lines passing through the pinholes till they meet. This point marks the center if the lines have been accurately drawn. Otherwise, locate the center point by trial, using the compass.

To make the flange on the small end of the cone, a series of radial cuts must be made in the pattern, reaching just beyond the voice-coil circle. The square stubs so produced are now bent so as just to include the pencil line of the circle in the bend, allowing in this way for the width of the paper which makes the flange. A perfect fit is thus assured the voice coil.

After collodion cement is applied to the seam edges, these are put together to make coincide the pinholes through which thumb tacks are passed into a flat board. The seam is thus held tightly against the board until dry. When dry, the cone should be placed on a flat surface, large diameter downward, and a small book placed on top of the cone until the paper sets.

The Voice-Coil Tube

To make a voice coil, the paper used must have straight edges, an absolutely even surface and uniform quality. The two-inch paper used in adding machines fills the bill in all particulars and is just wide enough.

The paper must be wound on a form of some kind. In many cases the pole of the speaker field can be used. Where this is possible, experimentally wind this paper ribbon tightly upon the pole until it takes up nearly half the space between the pole and the steel collar surrounding it. The diameter of the paper ribbon is then that of the voice coil to be made. We say "nearly half the space," because room must be allowed for the voice-coil wire.

Now, slide the paper tube off the pole piece and unwind it *from the inside* until just two layers of paper are left to form the tube. Nick the paper at this point and then unwind the rest of the tube. Cut the paper straight across at the point where nicked. These two pieces give us the exact dimensions for cutting two new strips which are wrapped carefully around the pole in the proper order; first the "filler" strip and then the "coil" strip, using thin cement in strategic places to keep each from unwinding. Of course, cement must not be put between the separate strips.

While the paper is on the mandrel or pole piece the second time, the wire can be wound on the form according to the position and number of turns of the old voice coil. The same numbered wire or a close approximation to it should, of course, be used. Extra wire should be allowed for leads to the proper terminals within the speaker.

Collodion lightly applied to the coil ends will keep the wire from unwinding and rattling. (Collodion applied over the entire surface of the voice coil tends to flake loose and produce buzzes at high frequencies, and should therefore be applied sparingly.) If too long, the voice-coil form must, of course, be cut down and can be quite easily done with small surgical scissors. The winding helps the form to retain its circular shape but the real secret lies in making the joints of the core-form neatly and with a minimum of cement or "dope." The form may be dipped in hot paraffin which serves further to stiffen the coil and protect it against moisture.

Reassembly

The sequence of reassembling will differ according to the type of speaker so that this must be left to the judgment of the repairman. Certain general requisites apply to all speakers, however. The cone and voice coil must be centered with regard to frame and field pole, and the latter must not touch the coil. The leads from the voice coil must be "doped" onto the cone and "spiders" to prevent vibration, since even a half-inch of loose lead-wire may introduce an unpleasant buzz.

The problem of repairing cones is one that does not seem to receive much attention. While Service Men in large cities may be in a position to obtain replacements in a relatively short time, those located in the more sparsely settled sections of the country must develop methods of their own to effect speedy repairs.

ELECTROLYSIS IN TRANSFORMERS

I WAS called recently to repair a set, which I went over with a tester of standard make. No faults were located. The batteries were new, and the set checked all right. Signals, however, were very weak.

I found that the audio transformer was leaking to the core, when I disconnected the "C" battery; as I then noted a spark. A very careful examination of the transformer followed; I took it apart carefully and noted a deposit of copper on the iron core. I unwound the primary, starting next to the core, and found the first layer of wire eaten away. I soaked in hot, distilled water a piece of the fiber insulation that was wound around the core, and found that it contained acid. This was the cause of the trouble.

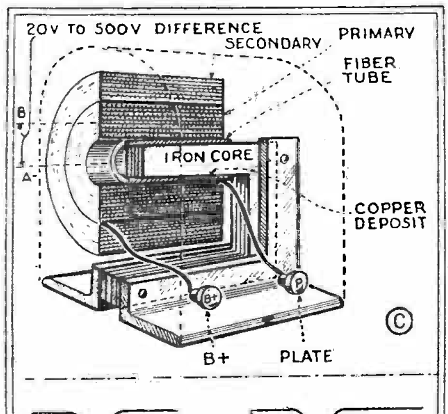

In place of grounding the core of an A.F. transformer, as at A, Mr. Link connects it to "B+" as at B. In a transformer which he dissected, electrolysis was apparent from primary to core, as at C.

Since the fiber contained acid, and the core was grounded to the metal sub-panel, while the "B+" was hooked to the end of the primary winding next the core, electrolysis had taken place, and deposited the copper on the iron core.

A good way to eliminate such trouble is to insulate the transformer from the metal sub-panel, and connect the "B+" wire to the core, as well as to the "B+" terminal of the primary. This places both at the same potential and stops electrolysis.

REPAIRING MAGNETIC SPEAKERS

THE independent Service Man, who is called upon to repair all kinds of sets, is likely to have among his customers many who are still using cone- or horn-type loud speakers, of the designs popular a few years back. Most of these were intended for use with sets with low output current, being wound with 40-gauge wire; and an open or burnt-out coil is a common difficulty. You may consider such speakers obsolete; but to tell the owner of one, "Your speaker is not worth repairing," does not add to your profit or prestige. In fact, satisfying the customer with a prompt and economical repair job is just the kind of work that is likely to cause him to recommend you to his friends.

At first, it might appear too troublesome a job to be worth bothering with; but, with the improvised device shown in the sketch, I have found it to be a comparatively simple operation. It is also a profitable one; since a job for which your customer will readily pay $1.50 or $2.50 can be done in about thirty minutes. The winding of the coil itself requires only about five minutes. The wire costs nothing; since it can be obtained from the secondary of a defunct audio transformer.

Of course, speakers of too old a type, having a unit built like a headphone, are not worth bothering with; but the ones in most common use are usually of the balanced-armature type (Baldwin, Utah, etc.) which are quite easy to repair. These have a single coil wound on a bakelite or fiber bobbin. After removing this from the unit, a wood plug is fitted to the hole as shown; and a small rod is passed through the plug and held in the chuck of the hand drill, as shown. The bobbin need not be centered exactly.

The audio coil used to supply the wire is also mounted on a wooden core and a large brad in each end serves as a shaft. This coil is heavy and should be centered as nearly as possible; however, mounting it on a vertical axis avoids most of the trouble due to any lack of balance. This also allows the paper between the layers of wire to drop out of its own accord. The sketch tells most of the story.

There seems to be a "knack" in winding such delicate wire without breaking it; but this is easily acquired, and after that the job is surprisingly simple.

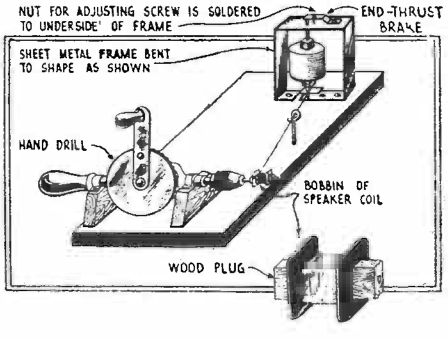

I undertook the first job of this kind to avoid the delay due to sending the unit to the factory for repair; but have found it to be a very desirable side line to other service work.

CORDLESS SOLDERING IRON

WHEN one is using an electric soldering iron, especially in wiring radio sets the cord of the iron is usually in the way; yet at times it is not long enough.

To prevent this annoyance, the connection shown in the sketch was used; it is very simple to rig up. A standard 110-volt socket is set into the top of the bench, by cutting a hole to fit. A flat metal-plate cover is set over this hole, to prevent dirt from falling in; a spring should be used on this cover, so that it will close automatically.

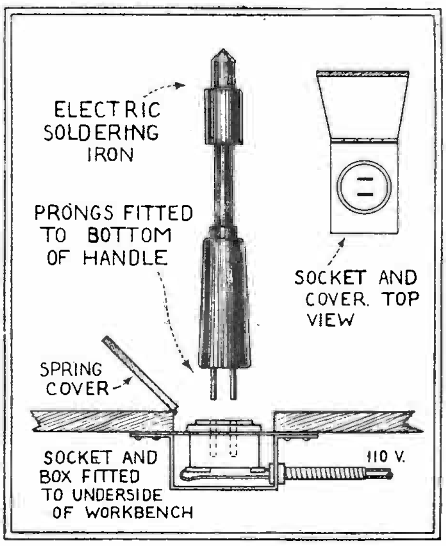

Fig. 3

By inserting the soldering iron into a fixed socket to keep it hot, it may be used without a cord.

Into the handle of the soldering iron, two prongs are fitted and connected to the terminals of the wires.

For heating, the soldering iron is set upright into the socket; and when needed for use, it is pulled out and brought to the work. Where continuous work is necessary two irons may be used. The heat will be retained in the iron for some time.

CHAPTER XIII

Commercial Receiver Diagrams

In this Chapter, Forming the Bulk of the Book, are Included Not Only the Various Commercial Diagrams, But Also Exhaustive Data Collected From the Service Manuals Published by the Various Manufacturers.

ALL-AMERICAN MOHAWK CORP.

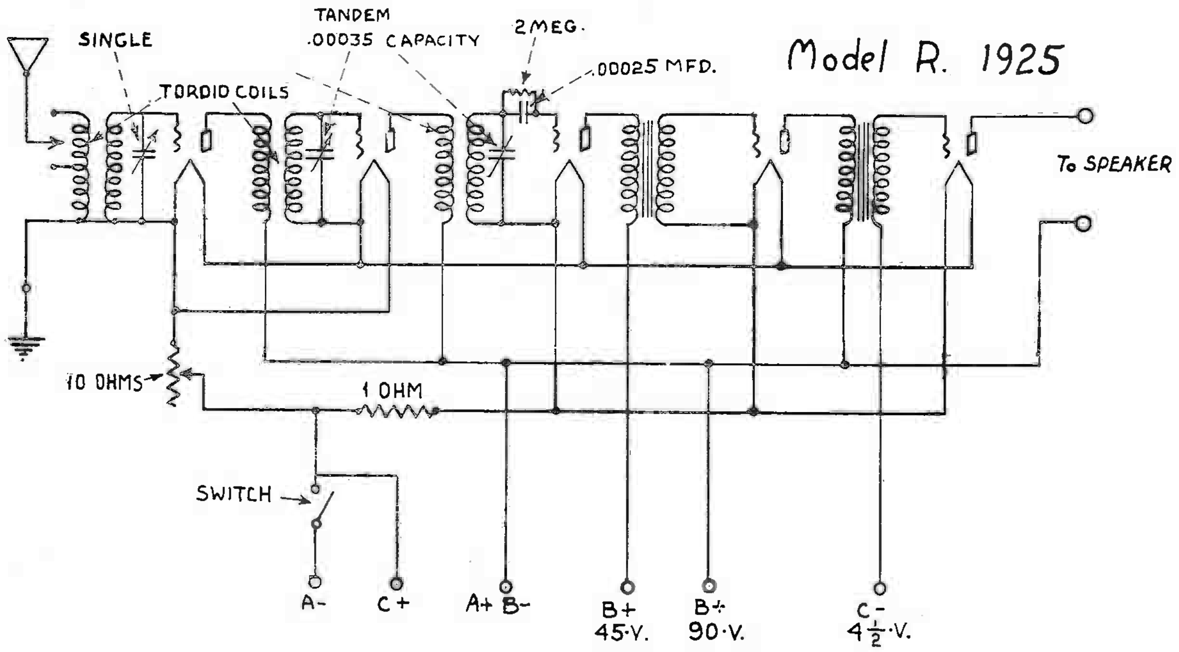

Model R. 1925

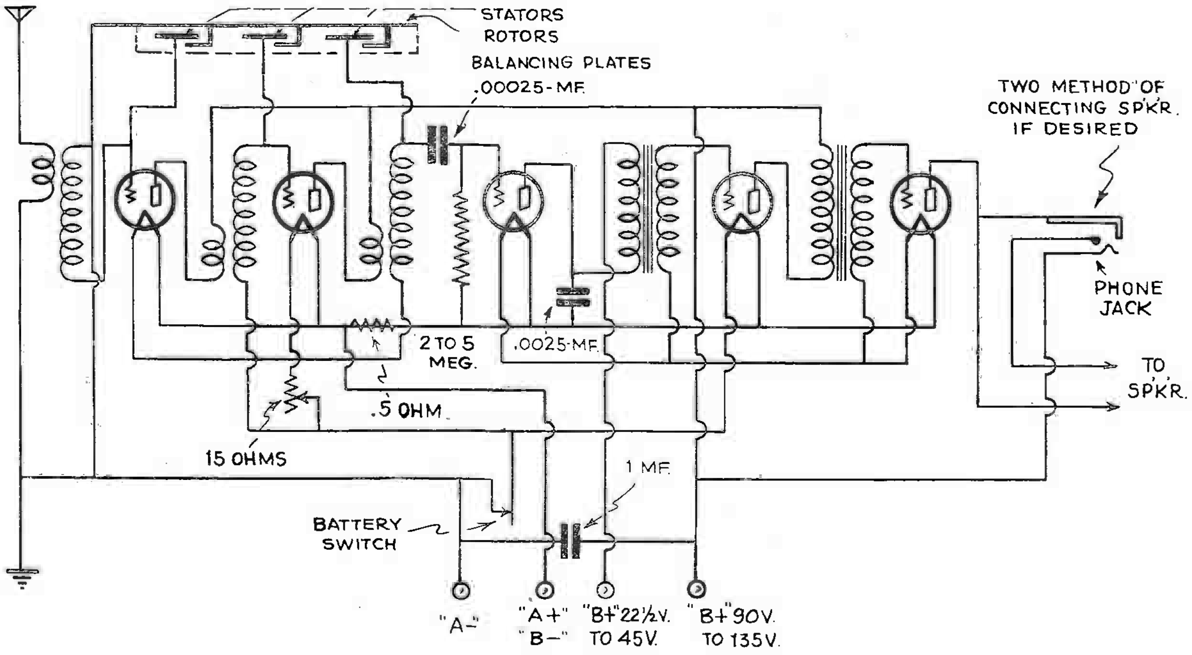

CHIEFTAIN BATTERY OPERATED ~ 1925

ALL-AMERICAN MOHAWK CORP.

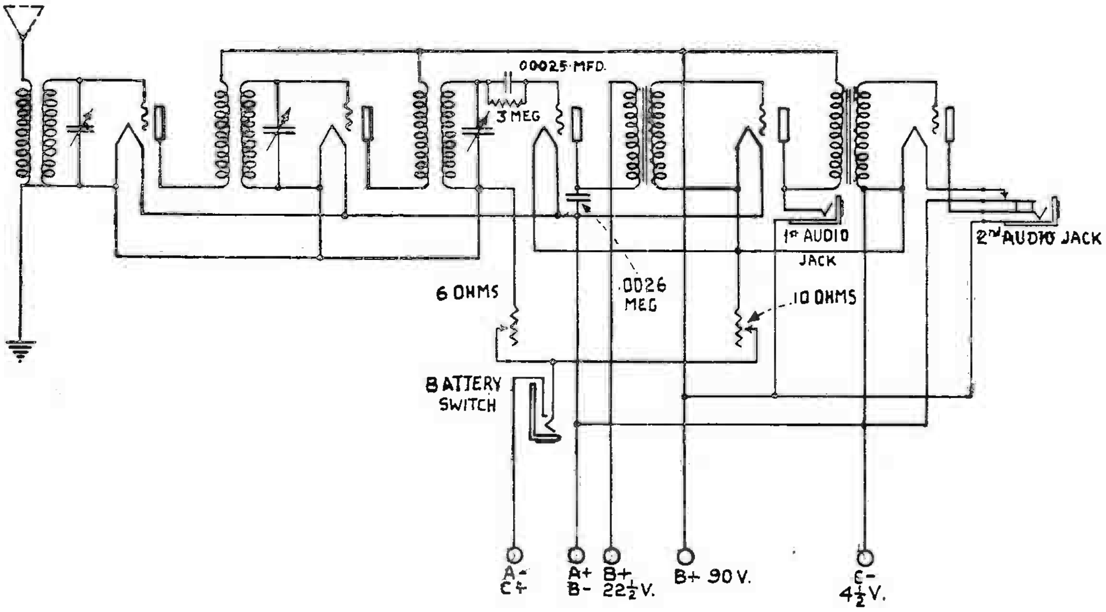

5 TUBE VA CIRCUIT 1925-26

COLOR CODE AND BATTERY HOOKUP.

GREEN- A-
RED - A +
WHITE CONN. TO RED = B -
SLATE- B+22½ OR 45 V.
BLUE - B+67½ OR 90 V.
PINK - 90.135 OR 180 V.
BLACK- C- 4½ V.
BROWN- C -4½.9.22½ OR 45 V.
YELLOW CONN. TO GREEN C+

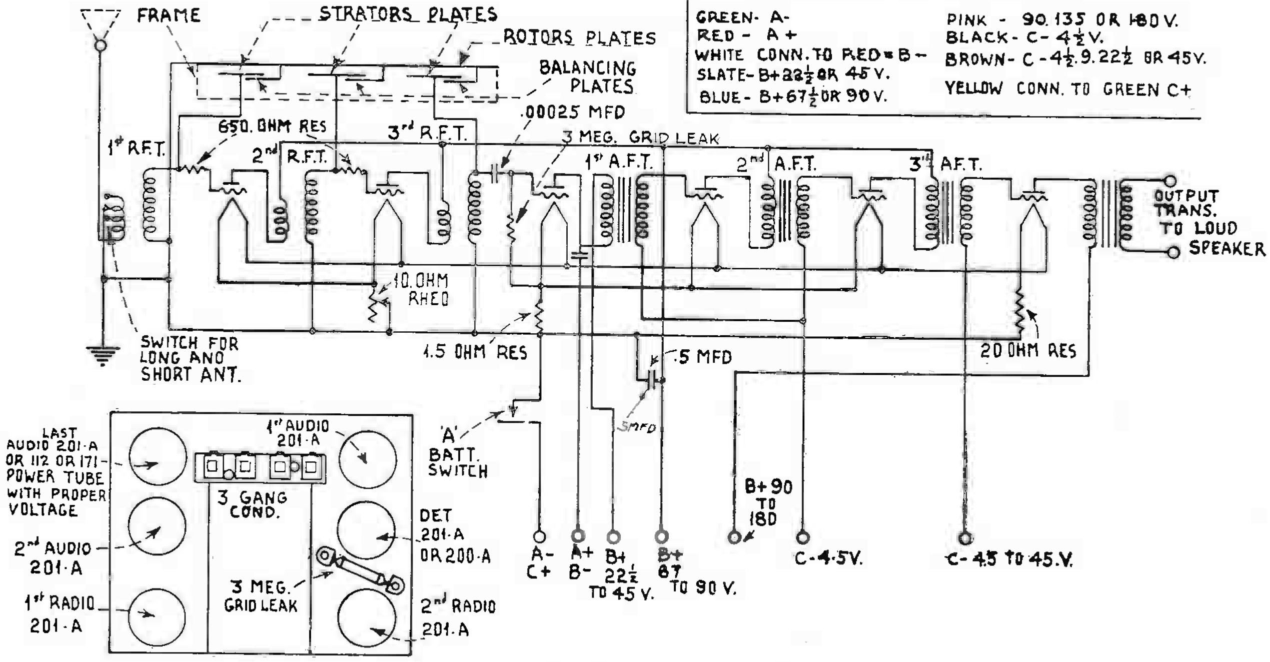

SCHEMATIC CIRCUIT of MOHAWK SET
BATTERY NAVAJO - 1926

ALL-AMERICAN MOHAWK CORP.

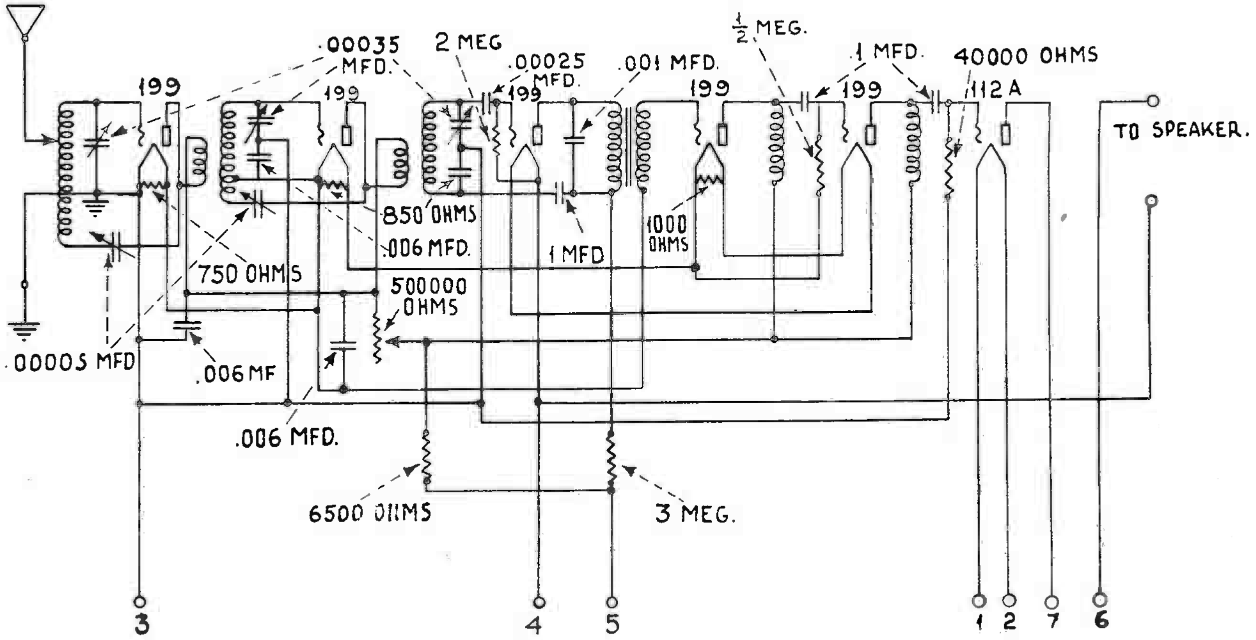

6TUBE ALL ELECTRIC 1926
SEXTETTE MODEL.

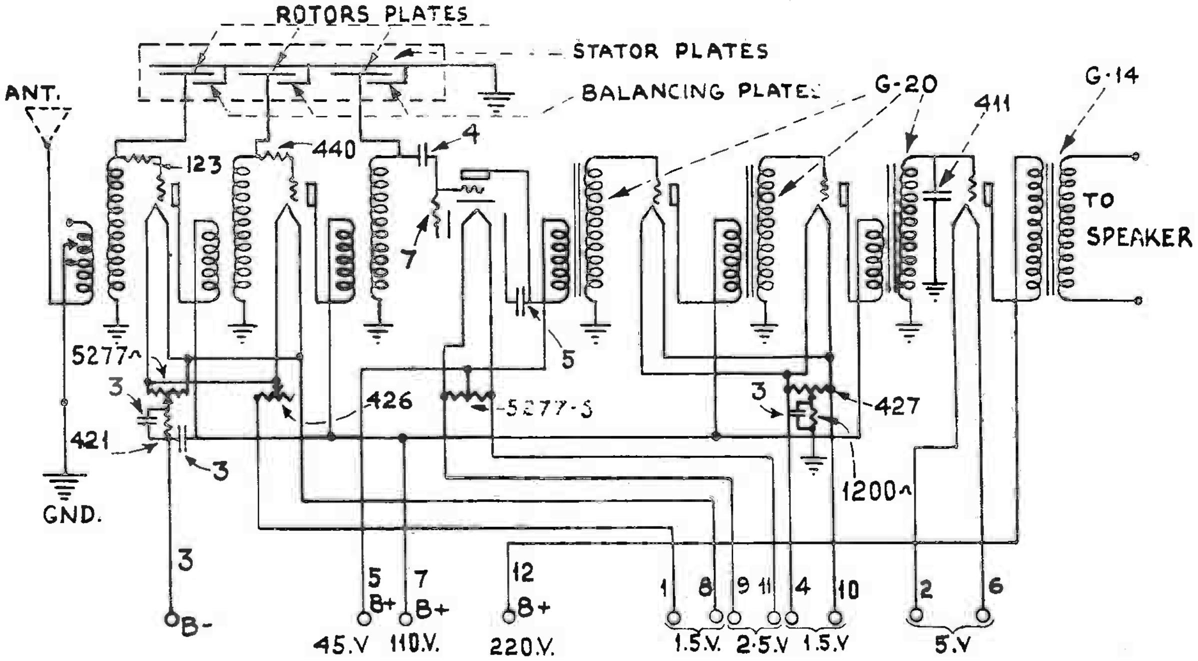

CIRCUIT OF MOHAWK SET -1926-
(ALL ELECTRIC)

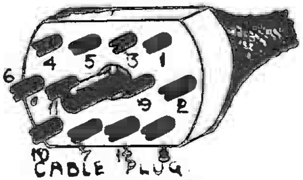

CABLE PLUG.

ALL-AMERICAN MOHAWK CORP.

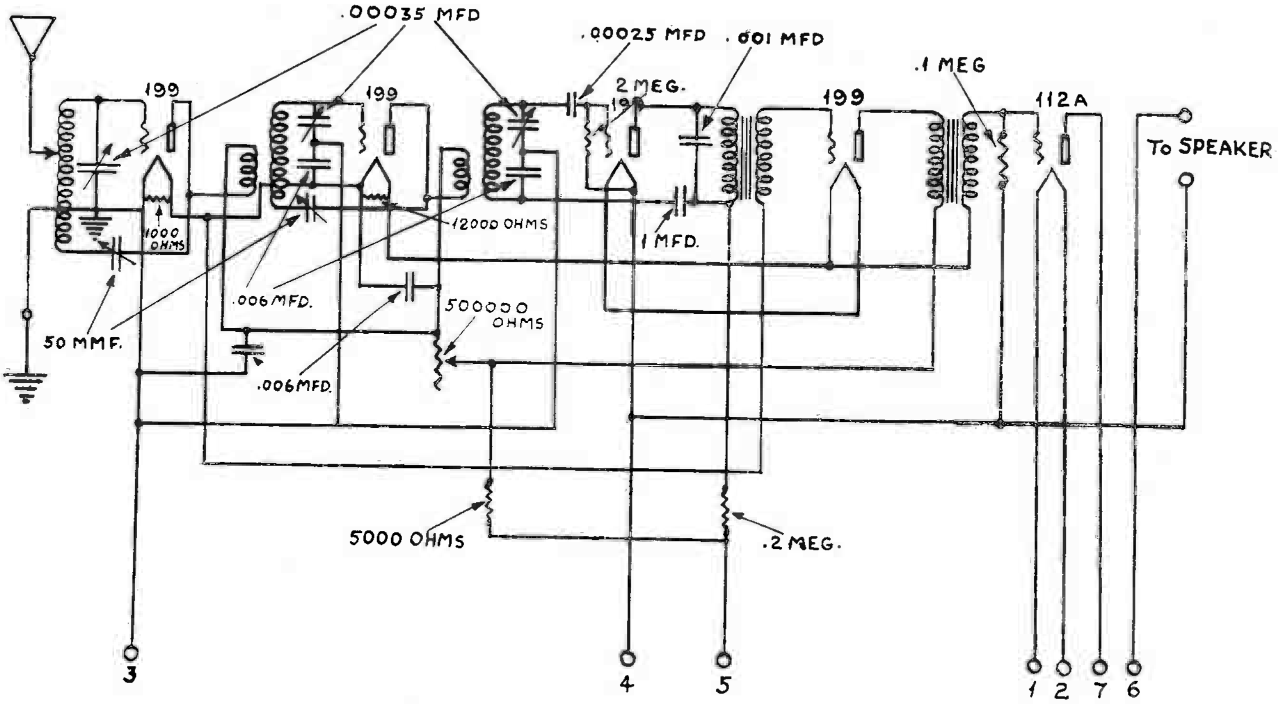

5 TUBE ALL ELECTRIC - 1926.
MODEL -115

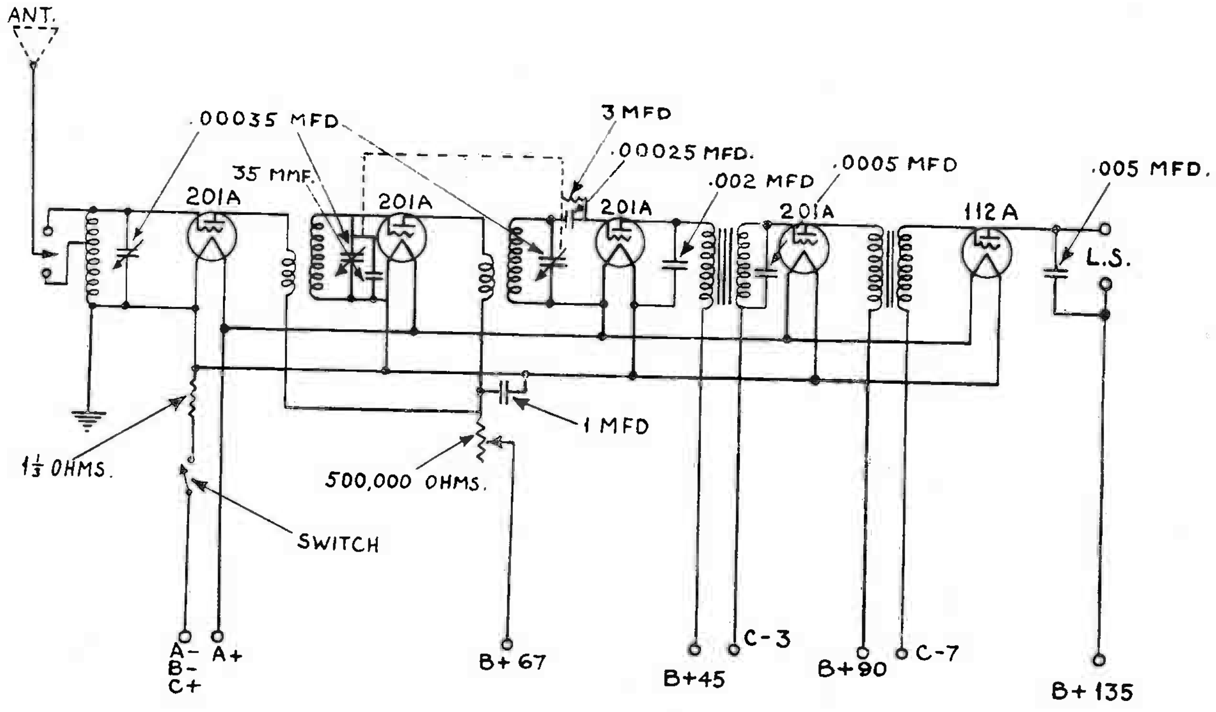

5 TUBE ALL AMERICAN BATTERY SET.
MODEL 115 - 1926-27.

ALL-AMERICAN MOHAWK CORP.

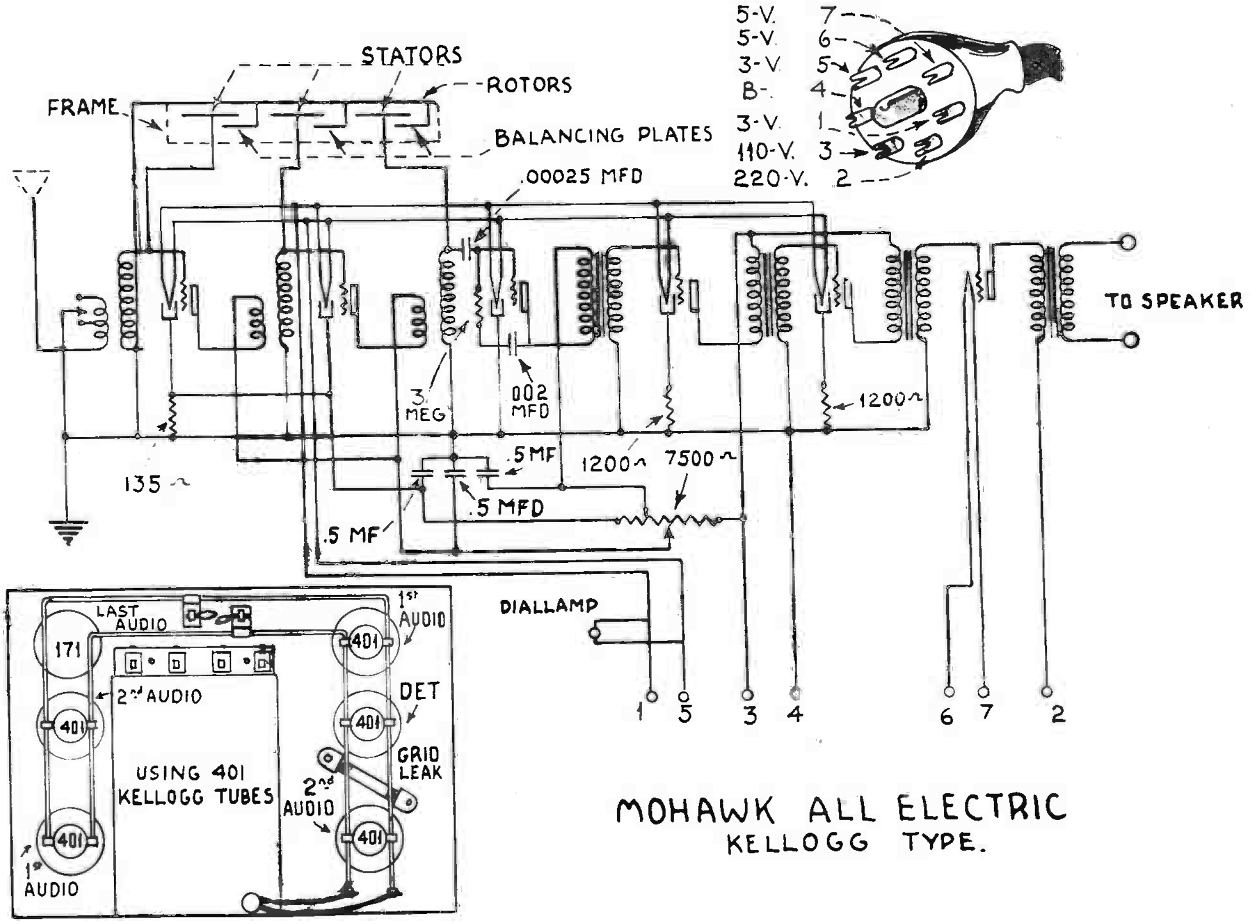

MOHAWK ALL ELECTRIC
KELLOGG TYPE.

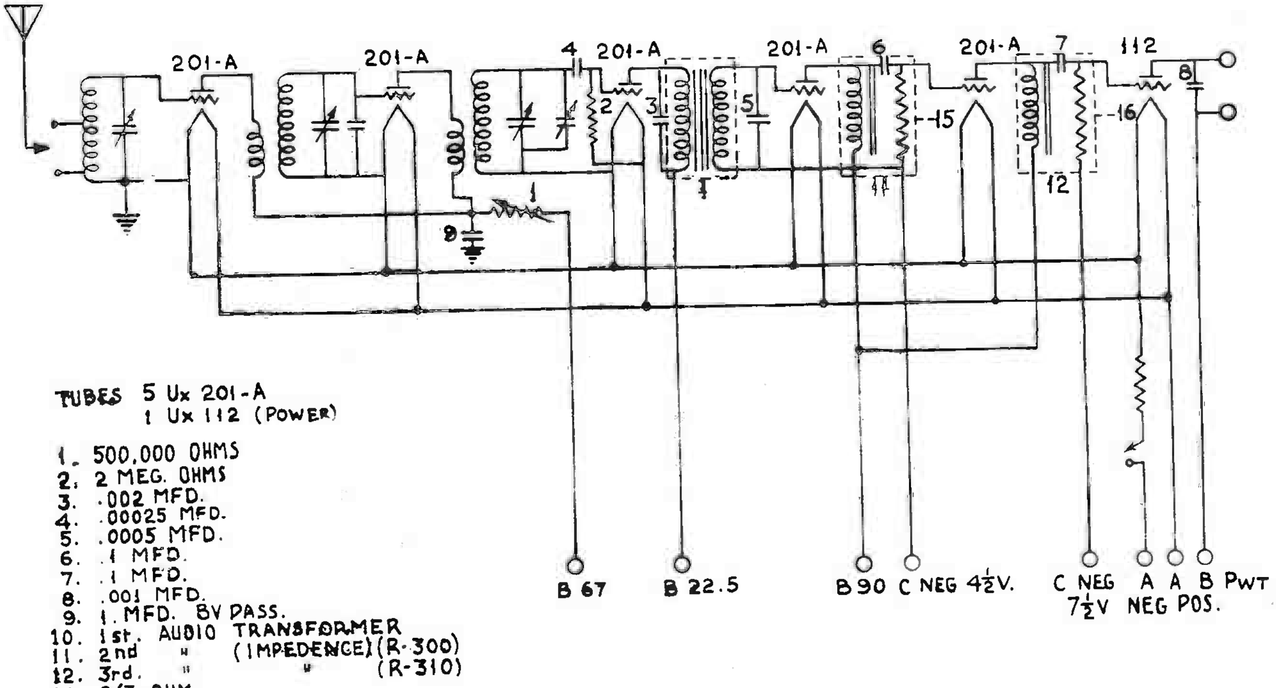

TUBES 5 Ux 201-A
1 Ux 112 (POWER)

1. 500,000 OHMS
2. 2 MEG. OHMS
3. .002 MFD.
4. .00025 MFD.
5. .0005 MFD.
6. .1 MFD.
7. .1 MFD.
8. .001 MFD.
9. 1. MFD. BY PASS.
10. 1st. AUDIO TRANSFORMER
11. 2nd " (IMPEDENCE) (R-300)
12. 3rd. " " (R-310)
14. 2/3 OHM.
15 ½ MEG. OHM.
16. 40,000 OHMS.

1926 CIRCUIT DIAGRAM OF 6 TUBE BATTERY OPERATED RECEIVER. 1927

ALL-AMERICAN MOHAWK CORP.

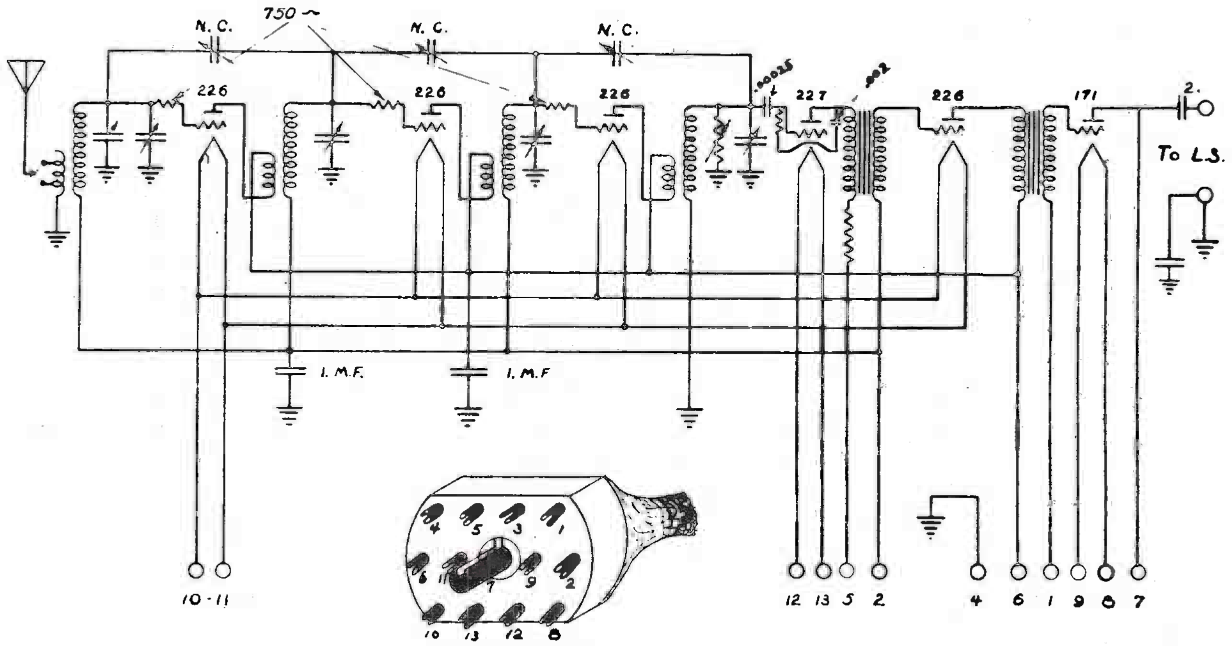

CABLE PLUG.

CIRCUIT DIAGRAM OF '27-'28
6 TUBE A. C. REC. (SIMPLIFIED) *77

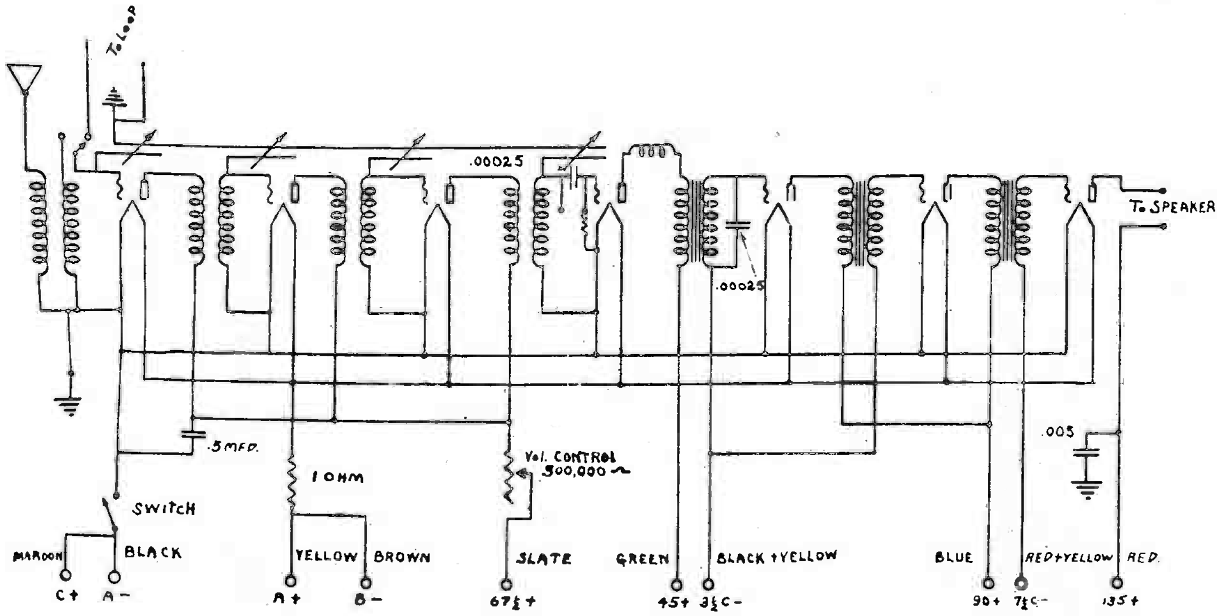

7 TUBE BATTERY OPERATED
1927 FORTE, LORRAINE AND SOVEREIGN 1928

ALL-AMERICAN MOHAWK CORP.

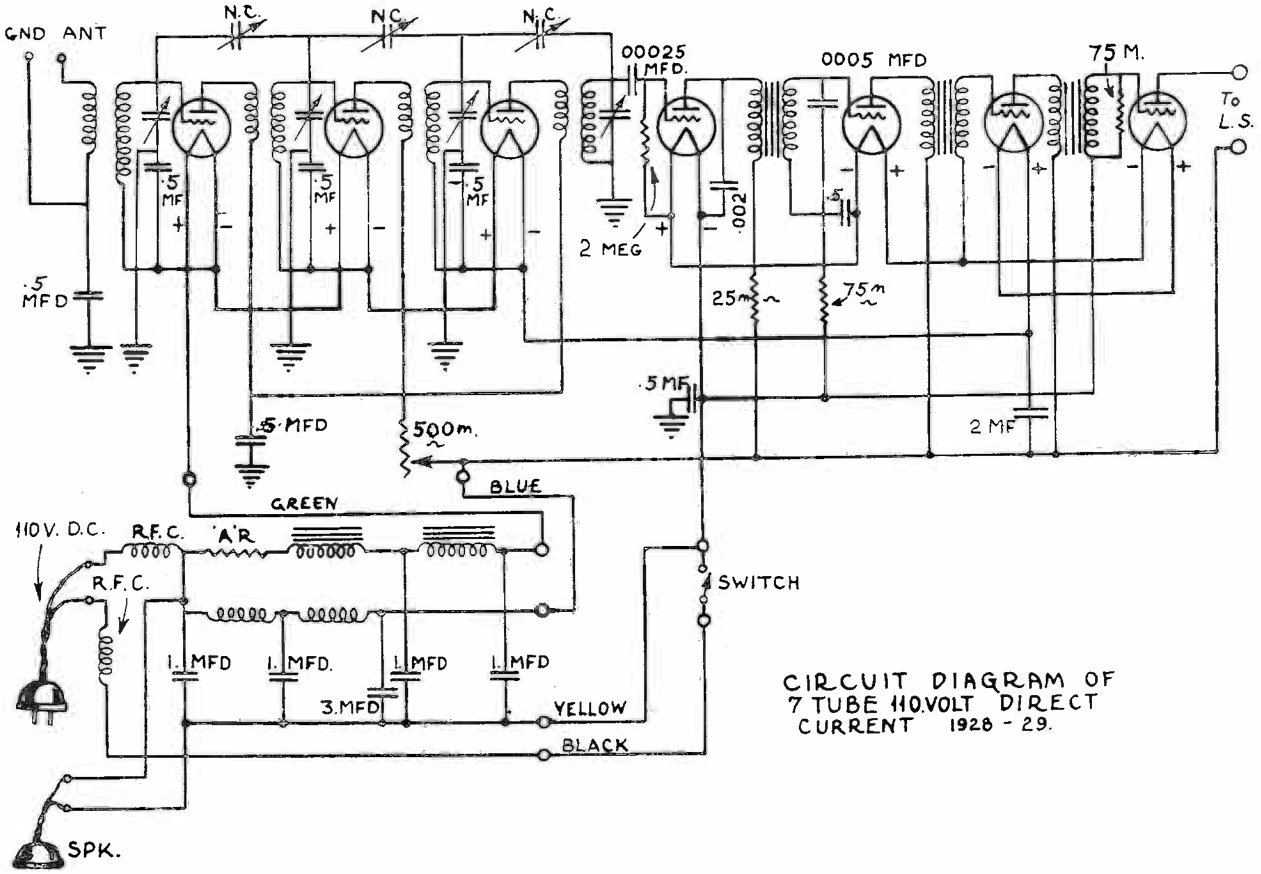

CIRCUIT DIAGRAM OF 7 TUBE 110.VOLT DIRECT CURRENT 1928 - 29.

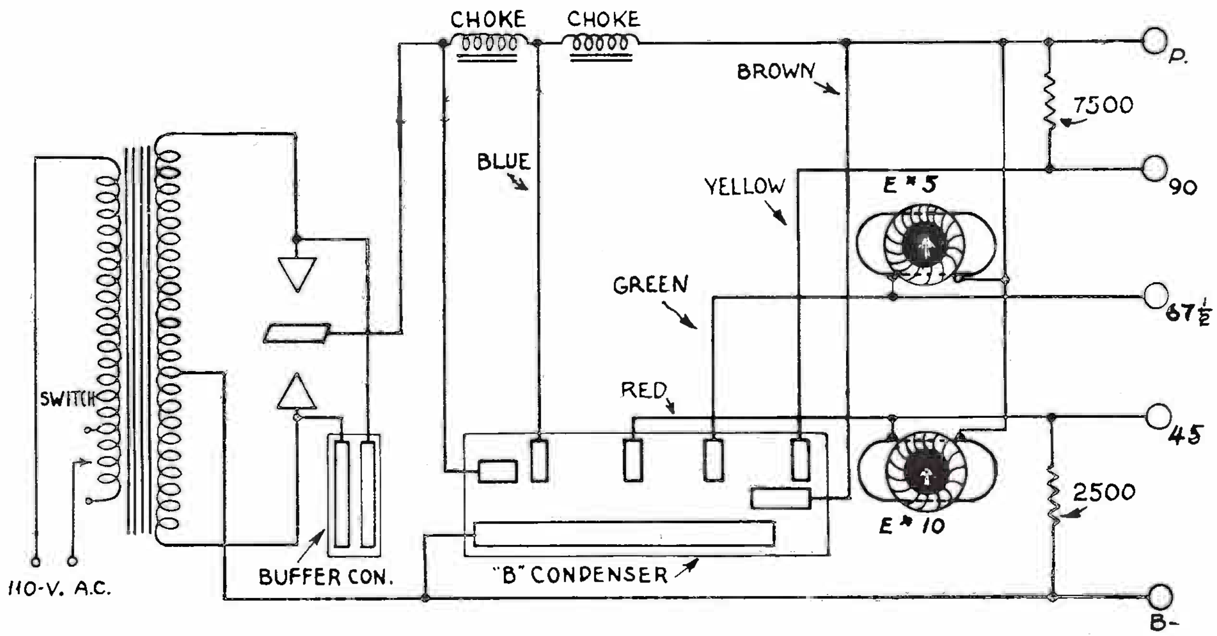

CONSTANT B" ELIMINATOR type A1, A3, A4.

ALL-AMERICAN MOHAWK CORP.

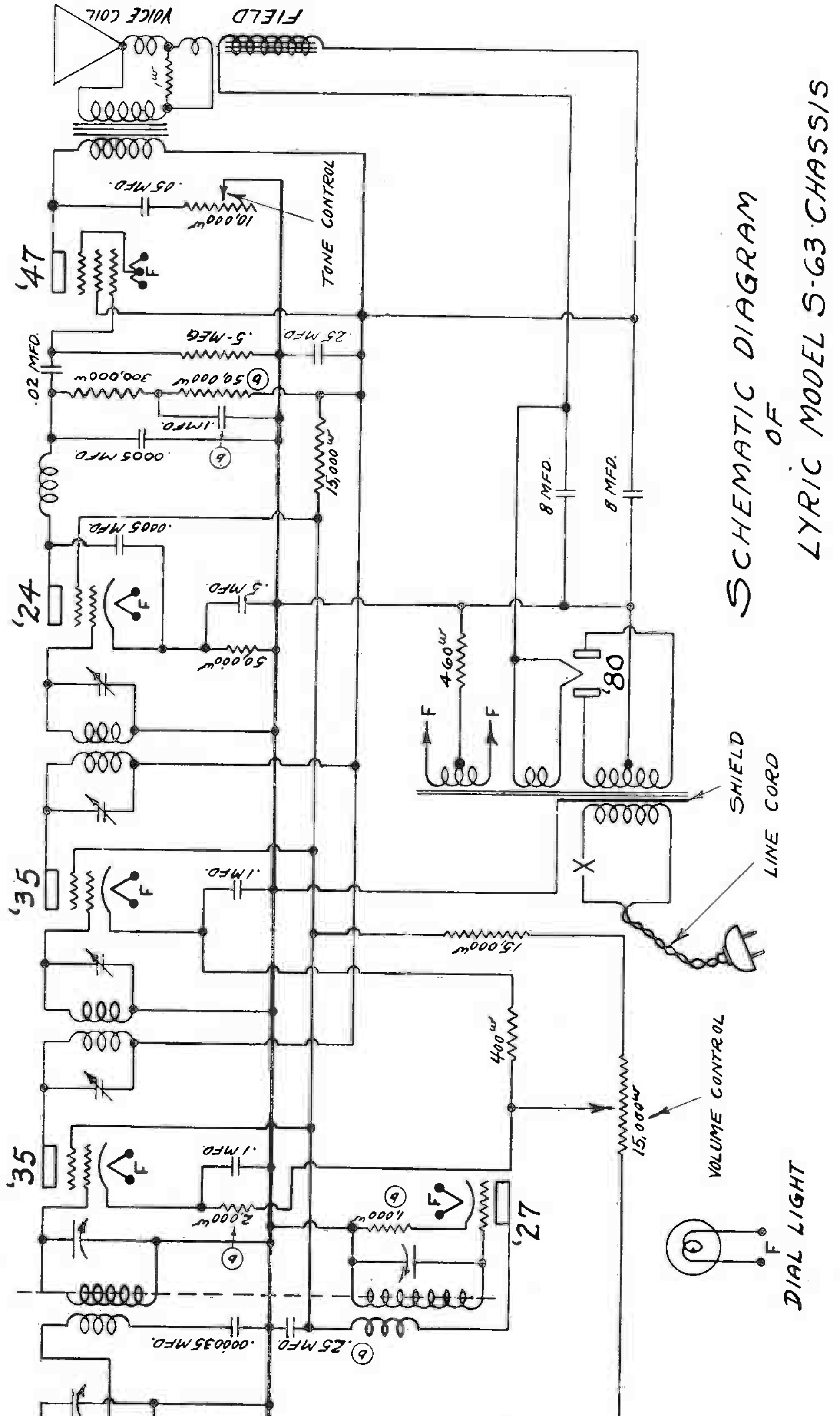

SCHEMATIC DIAGRAM OF LYRIC MODEL S-63 CHASSIS

ALL-AMERICAN MOHAWK CORP.

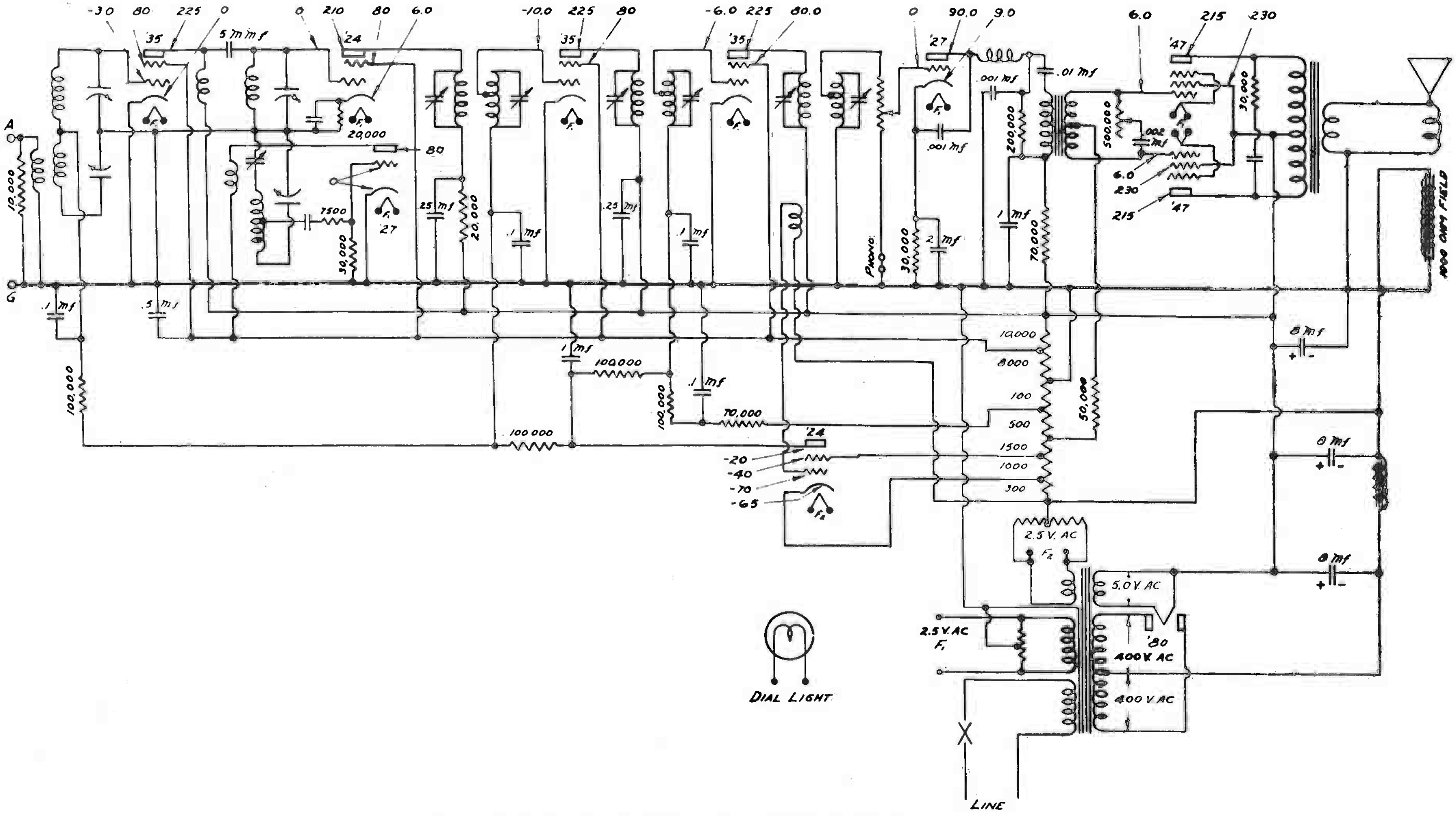

SCHEMATIC DIAGRAM OF LYRIC MODEL S-10 CHASSIS

ALL-AMERICAN MOHAWK CORP.

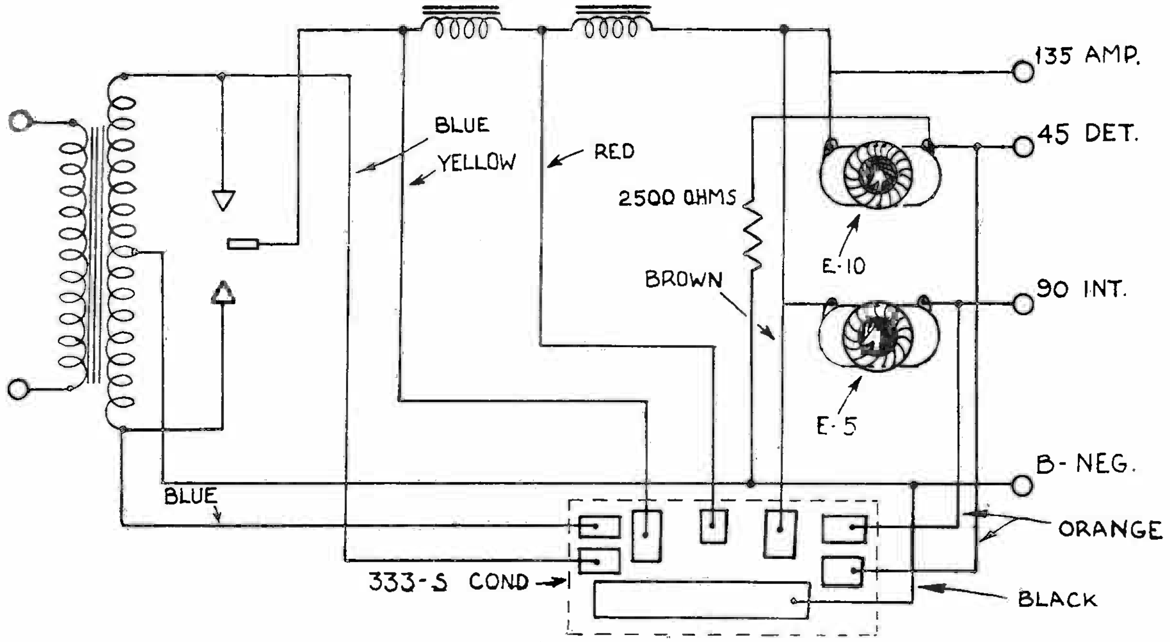

"B" ELIMINATOR TYPE A8 -1926-

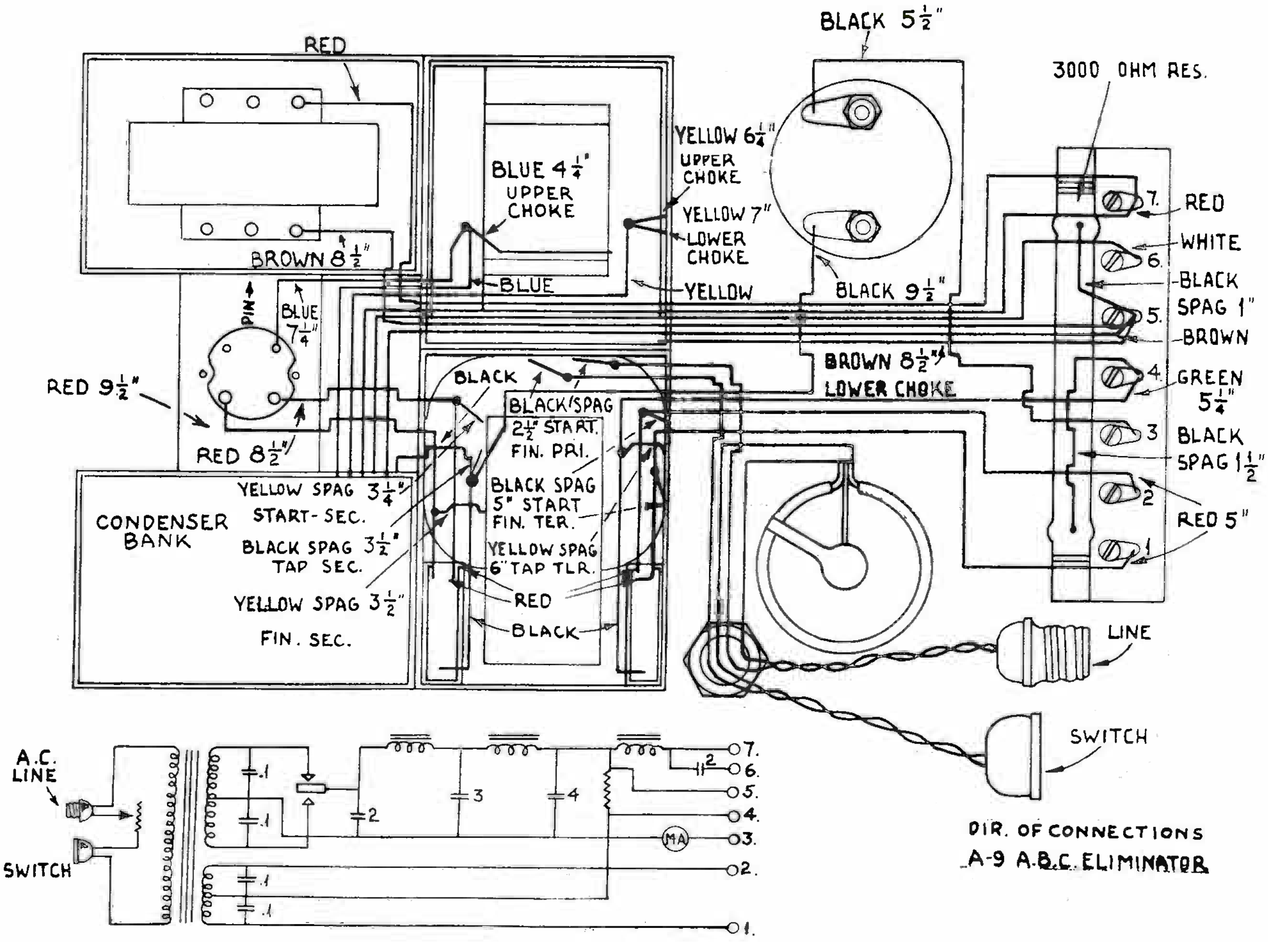

DIR. OF CONNECTIONS A-9 A.B.C. ELIMINATOR

ALL-AMERICAN MOHAWK CORP.

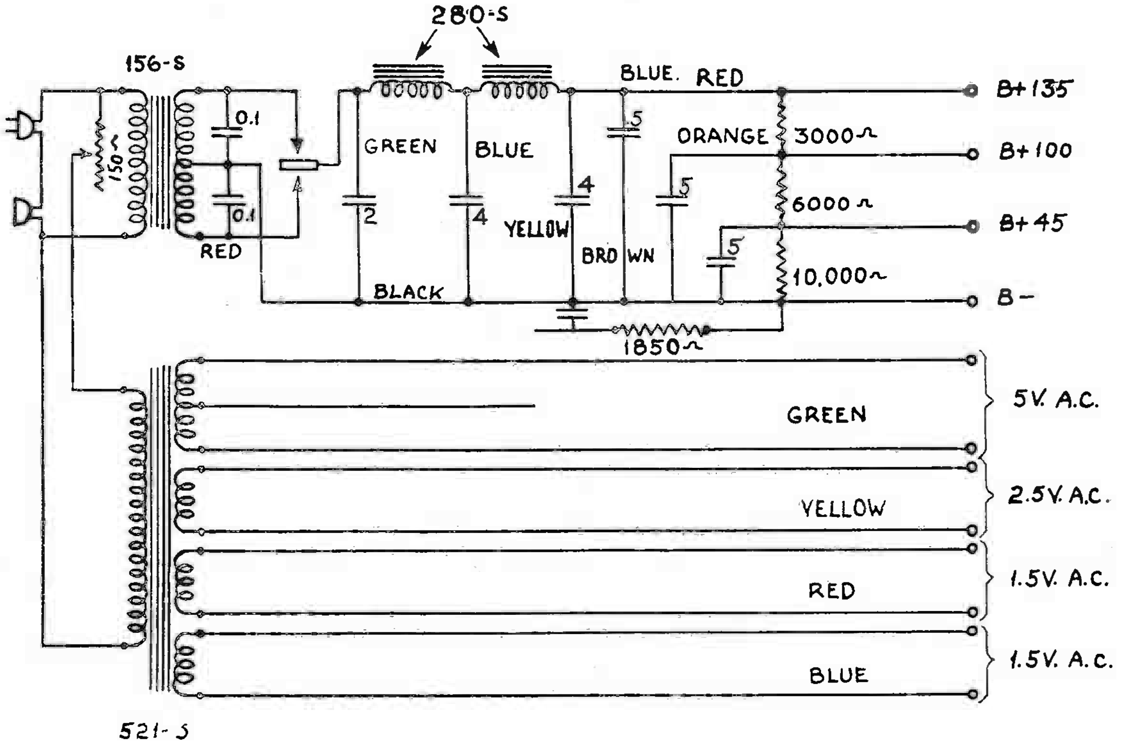

A-10 MOHAWK ELIMINATOR

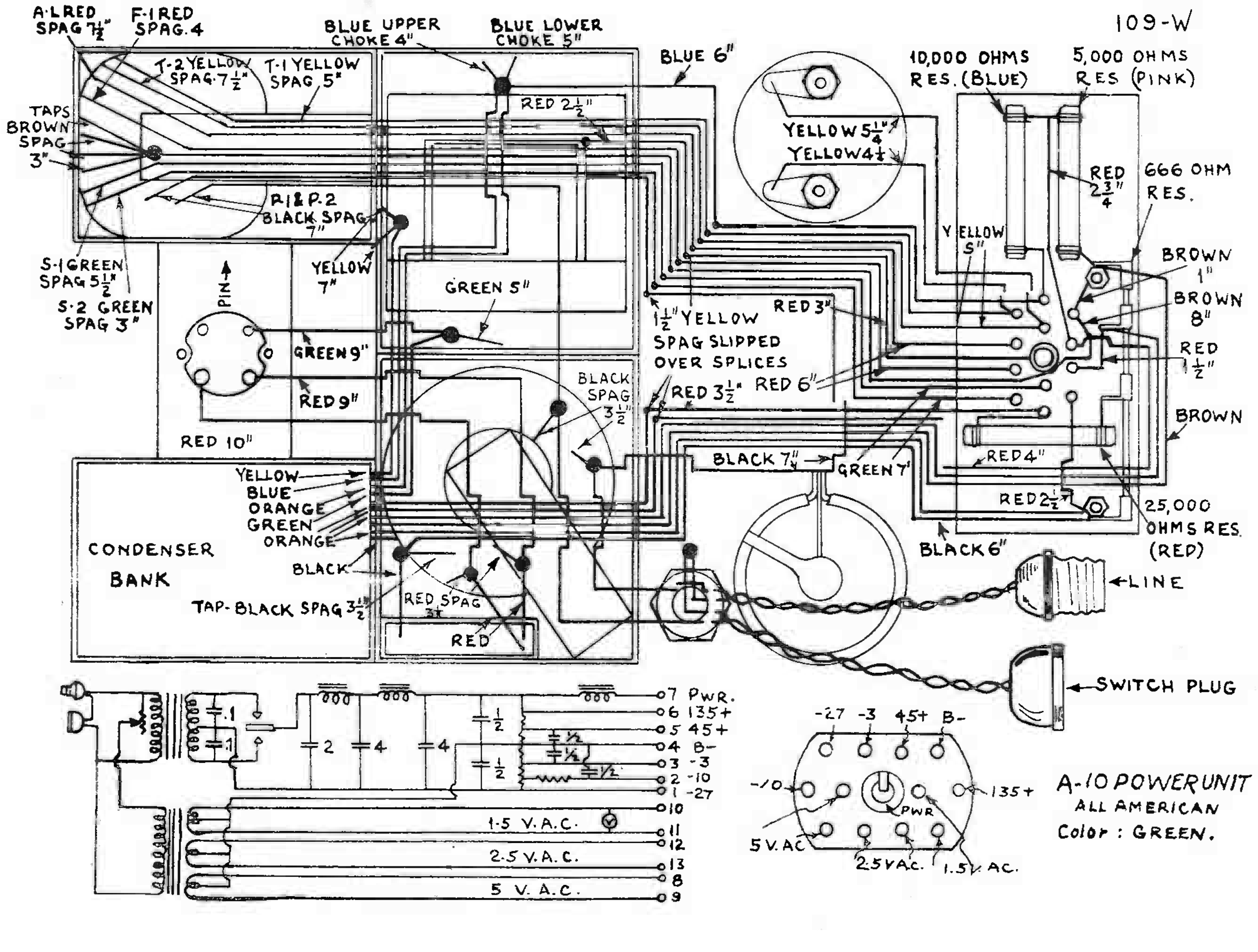

A-10 POWER UNIT
ALL AMERICAN
Color: GREEN.

ALL-AMERICAN MOHAWK CORP.

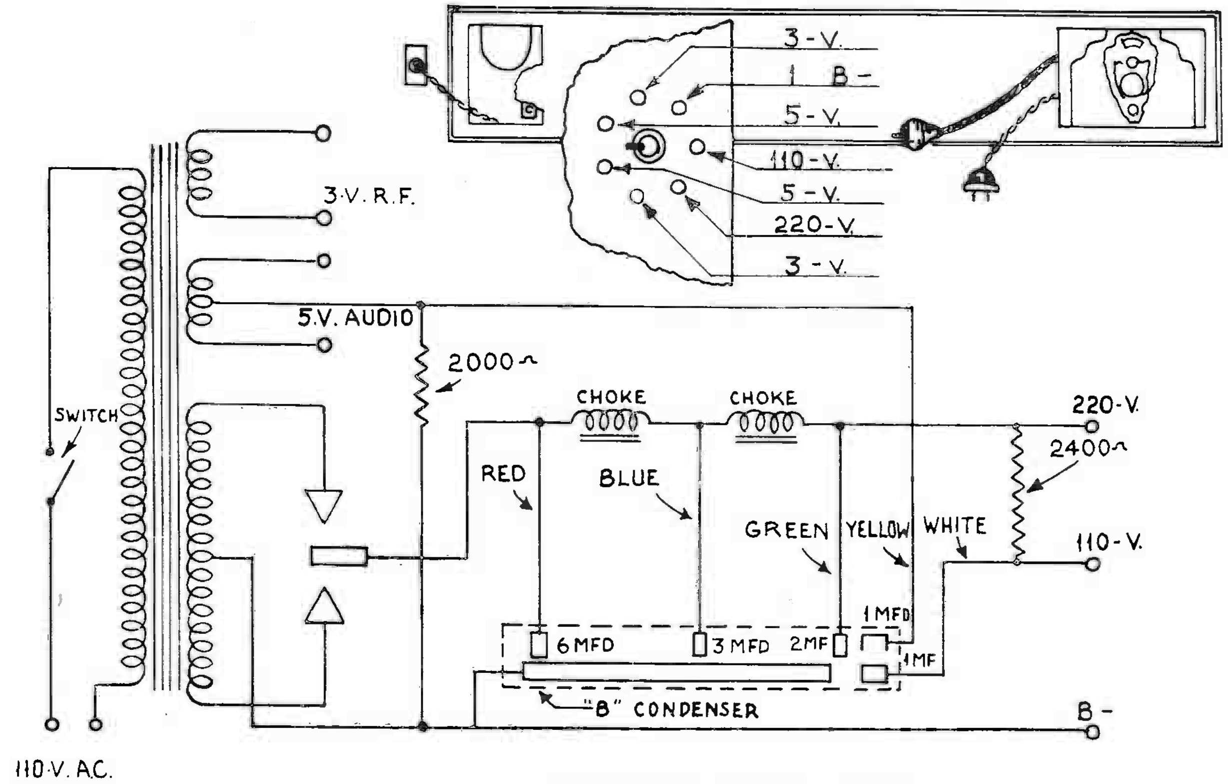

7 CONTACT POWER PACK for Mohawk 226
WITH NEW TYPE CONDENSER

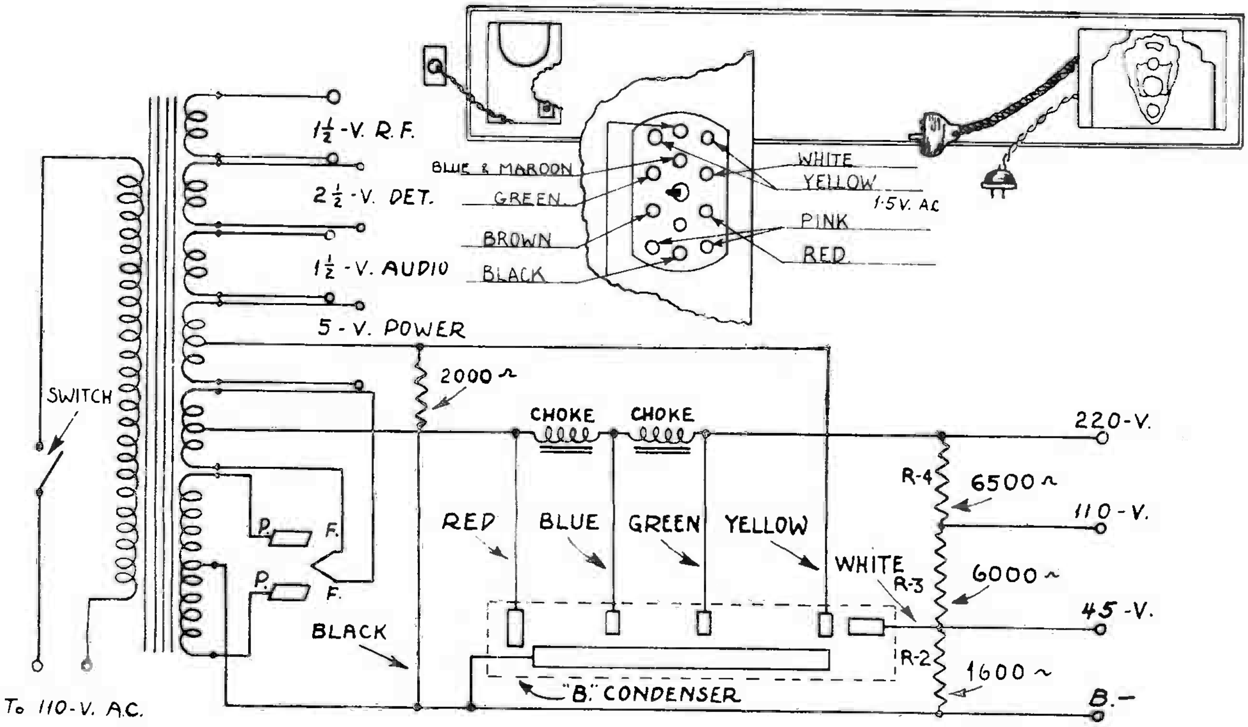

12 CONTACT POWER PACK for Mohawk 226
WITH NEW TYPE CONDENSER.

AUDIOLA RADIO CO.

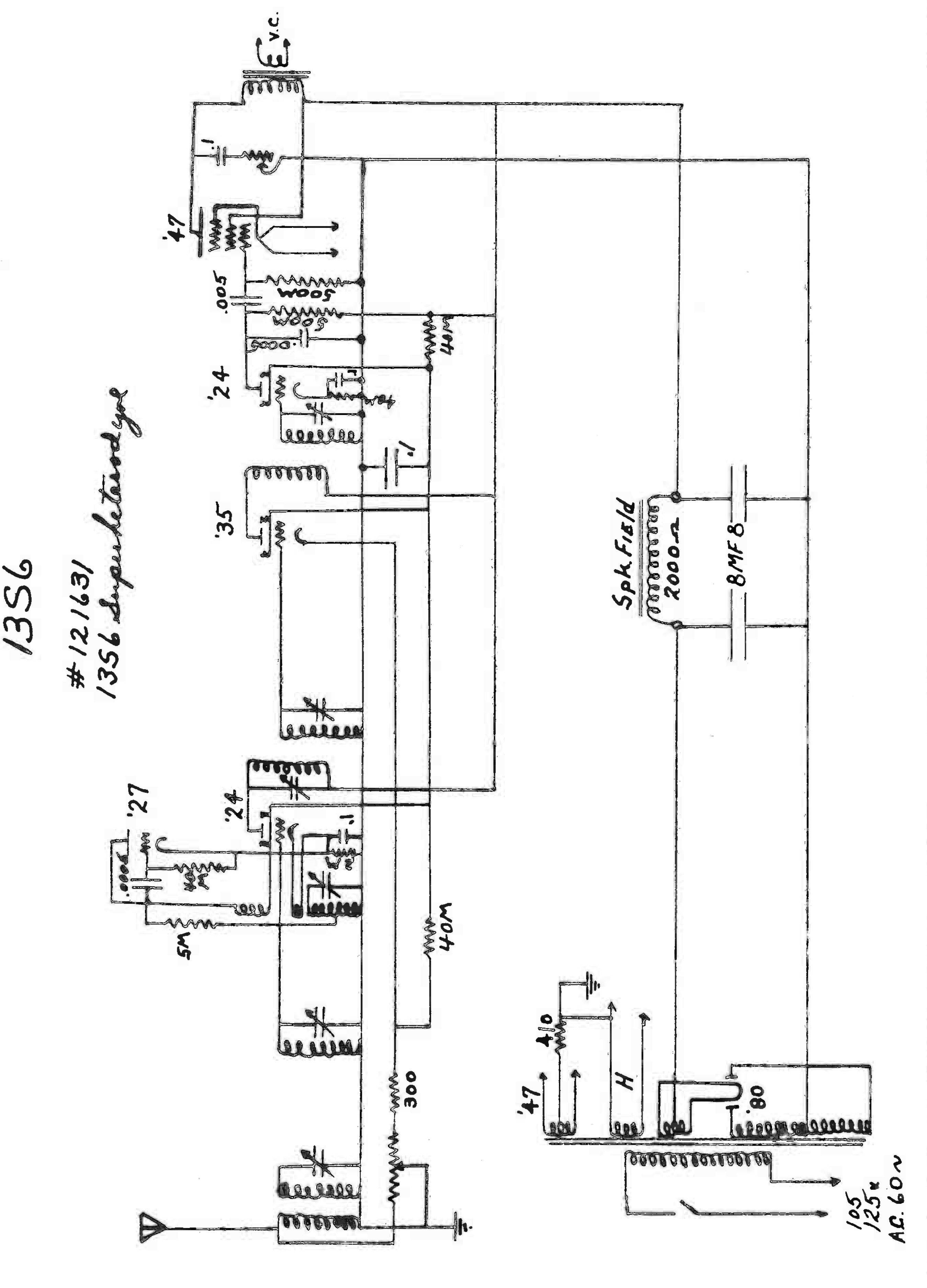

AUDIOLA RADIO CO.

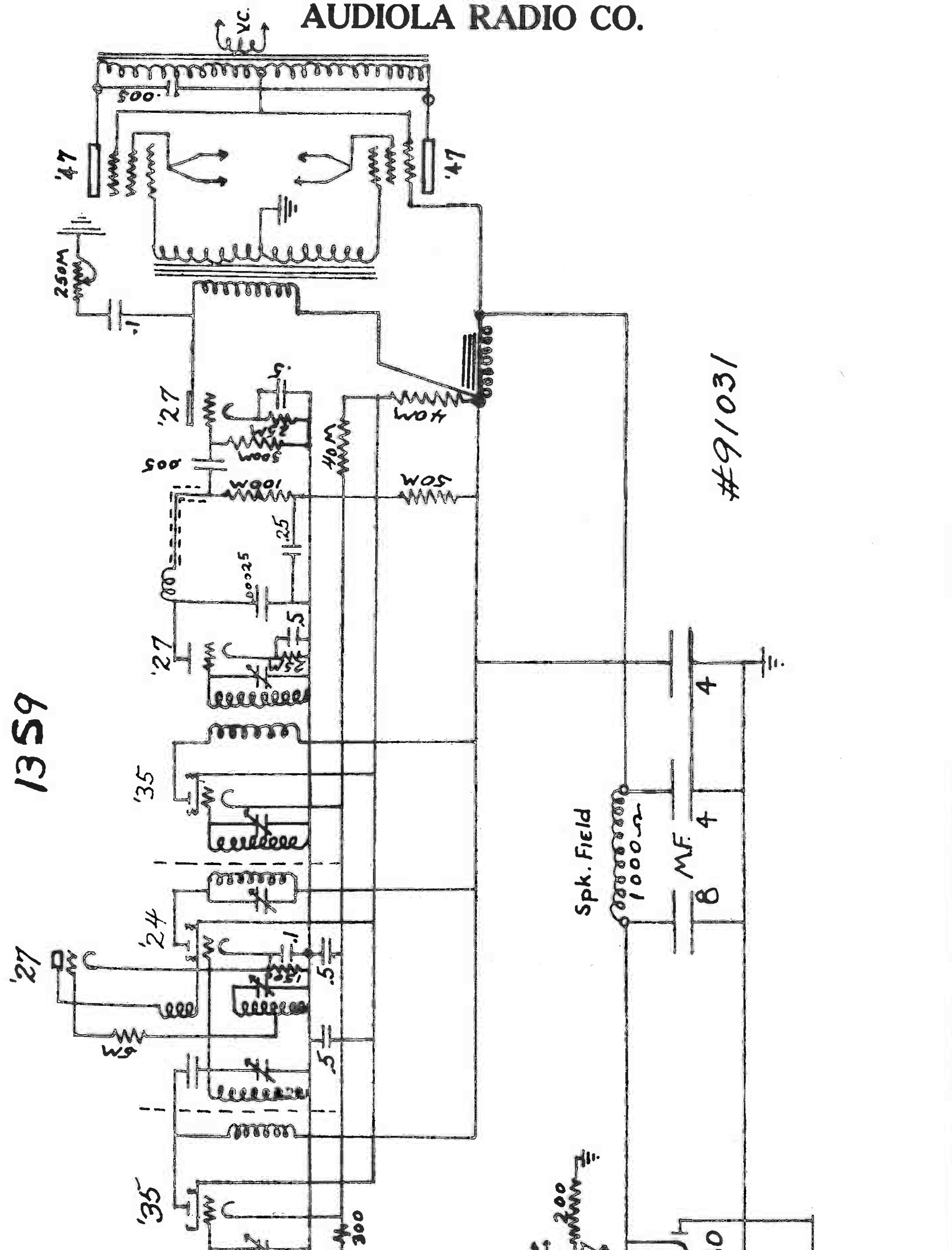

AUDIOLA RADIO CO.

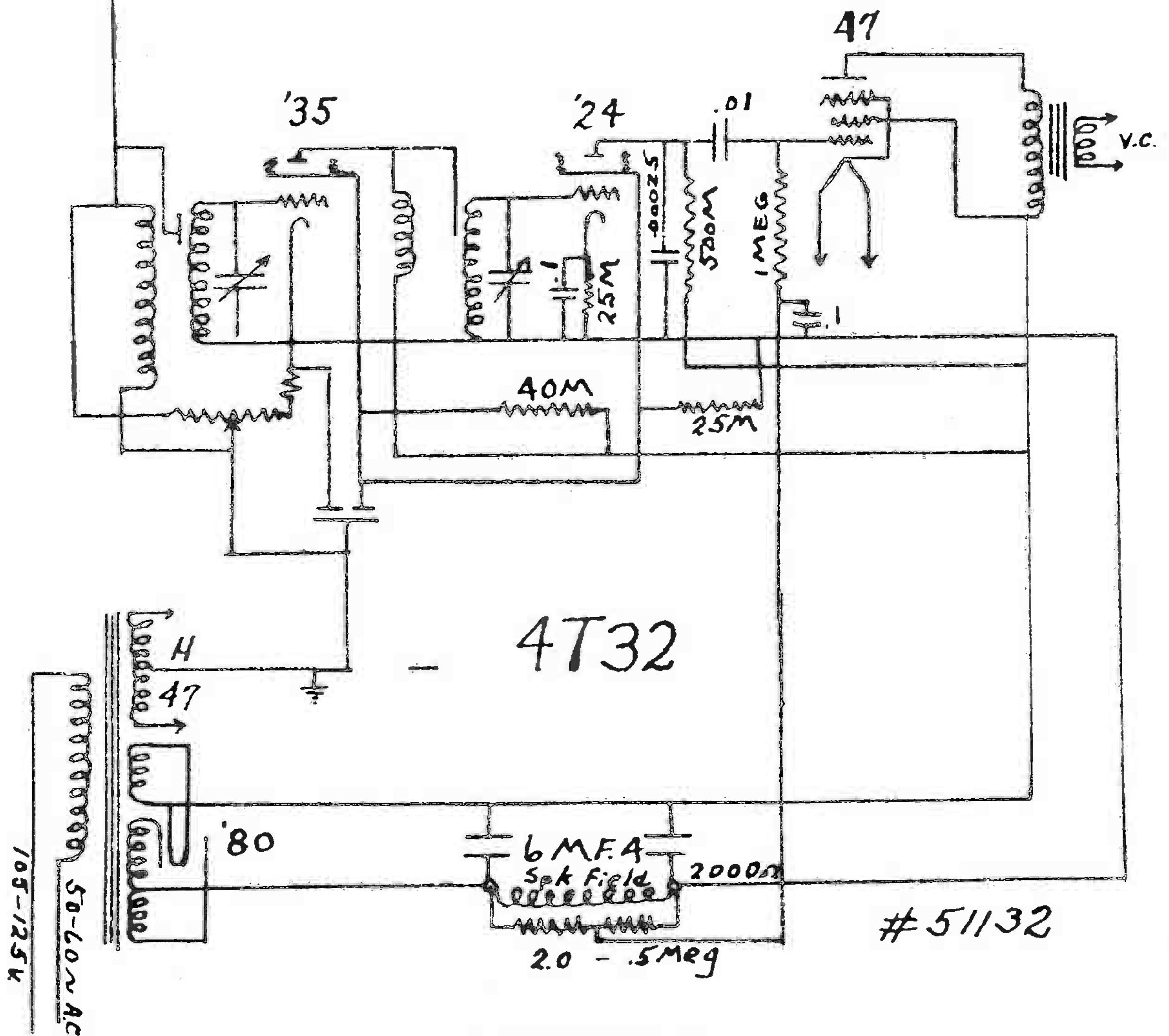

23T5SW

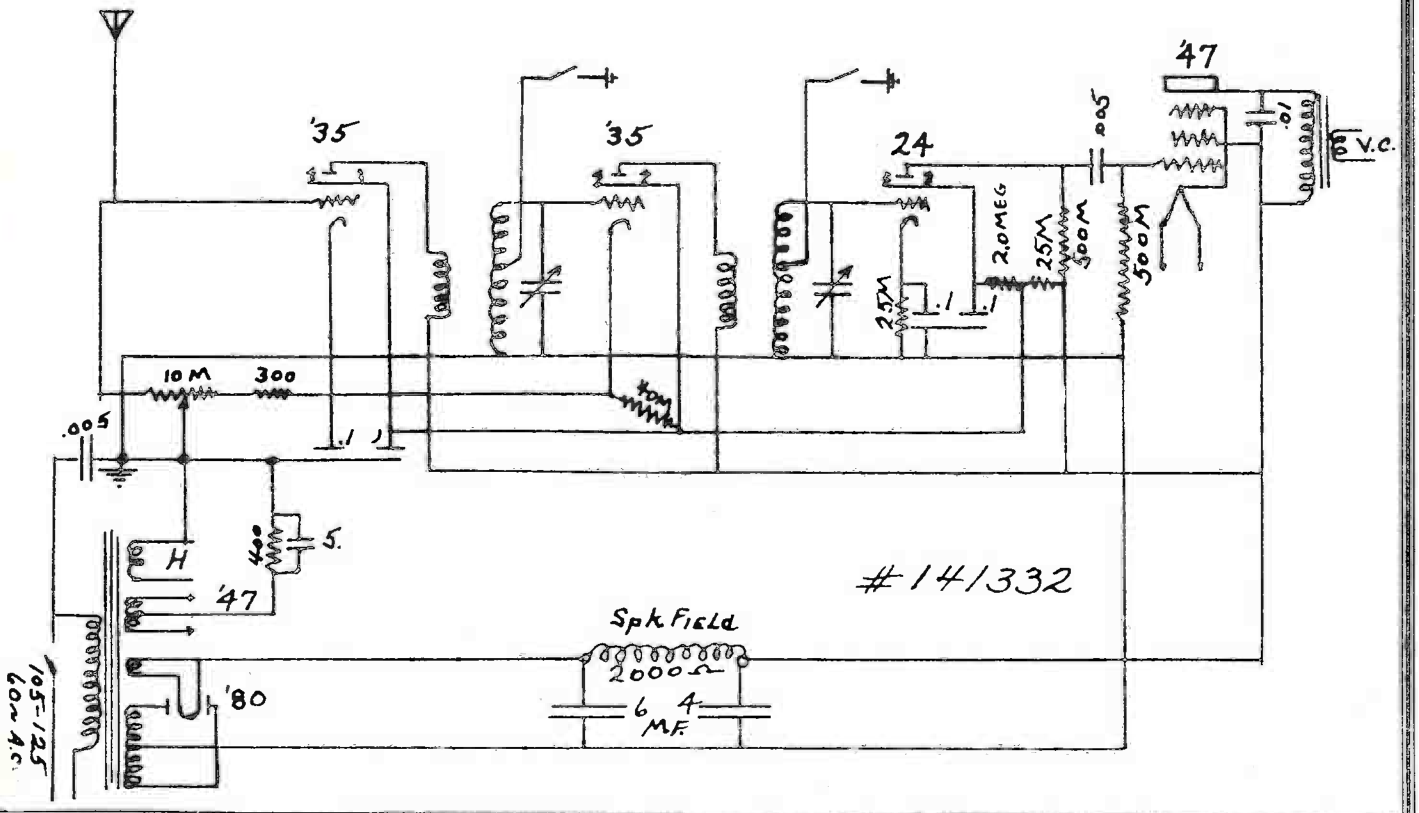

AUDIOLA RADIO CO.

23S8

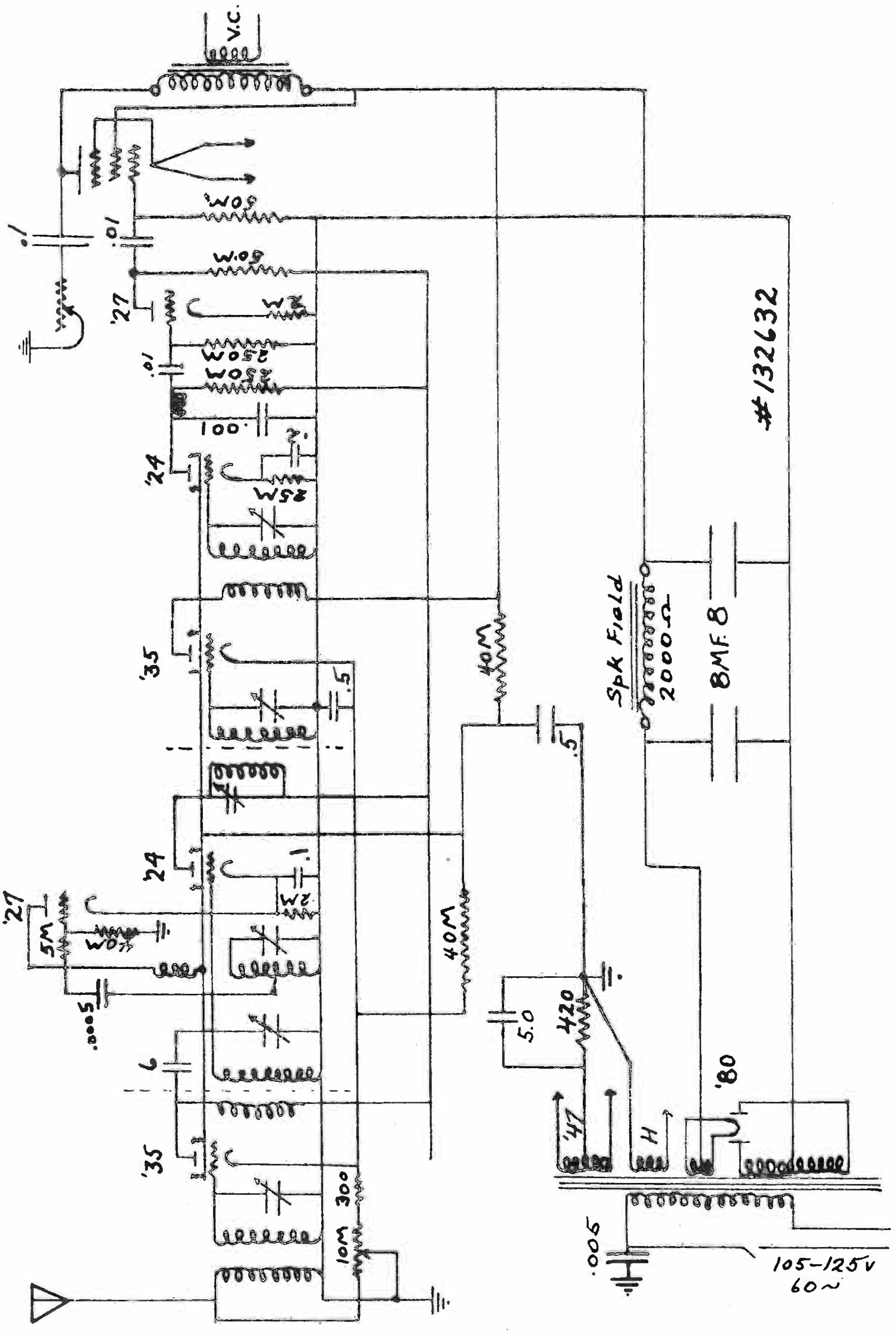

AUDIOLA RADIO CO.

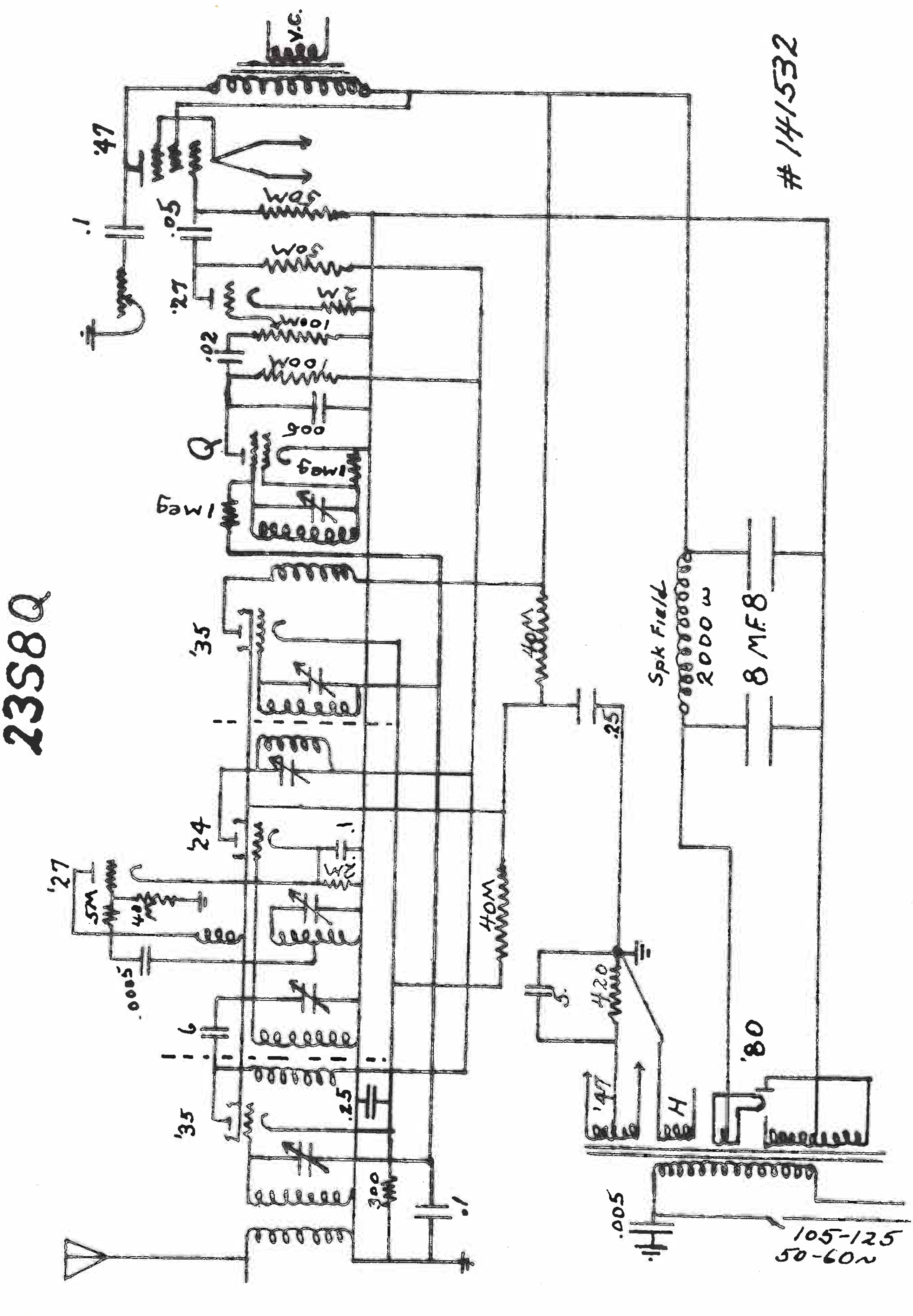

AUDIOLA RADIO CO.

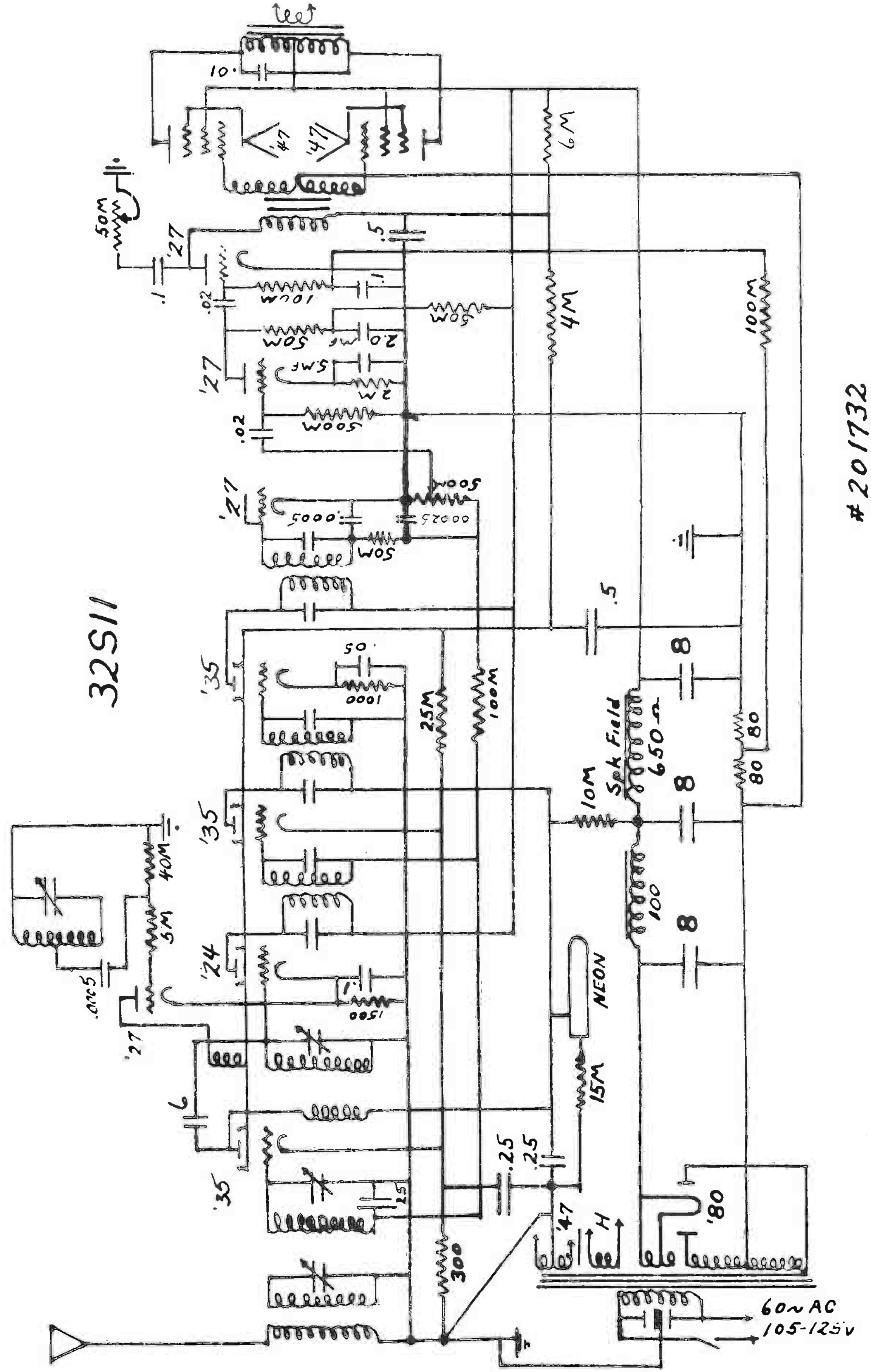

AUDIOLA RADIO CO.

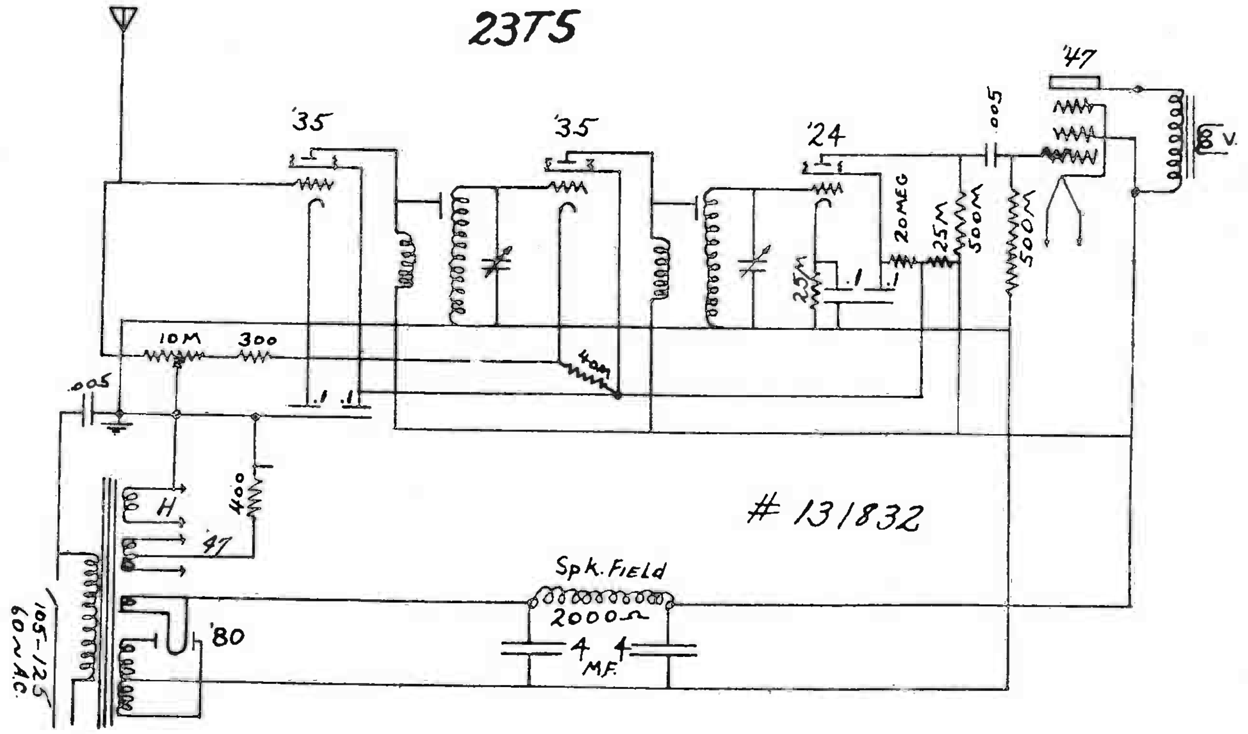

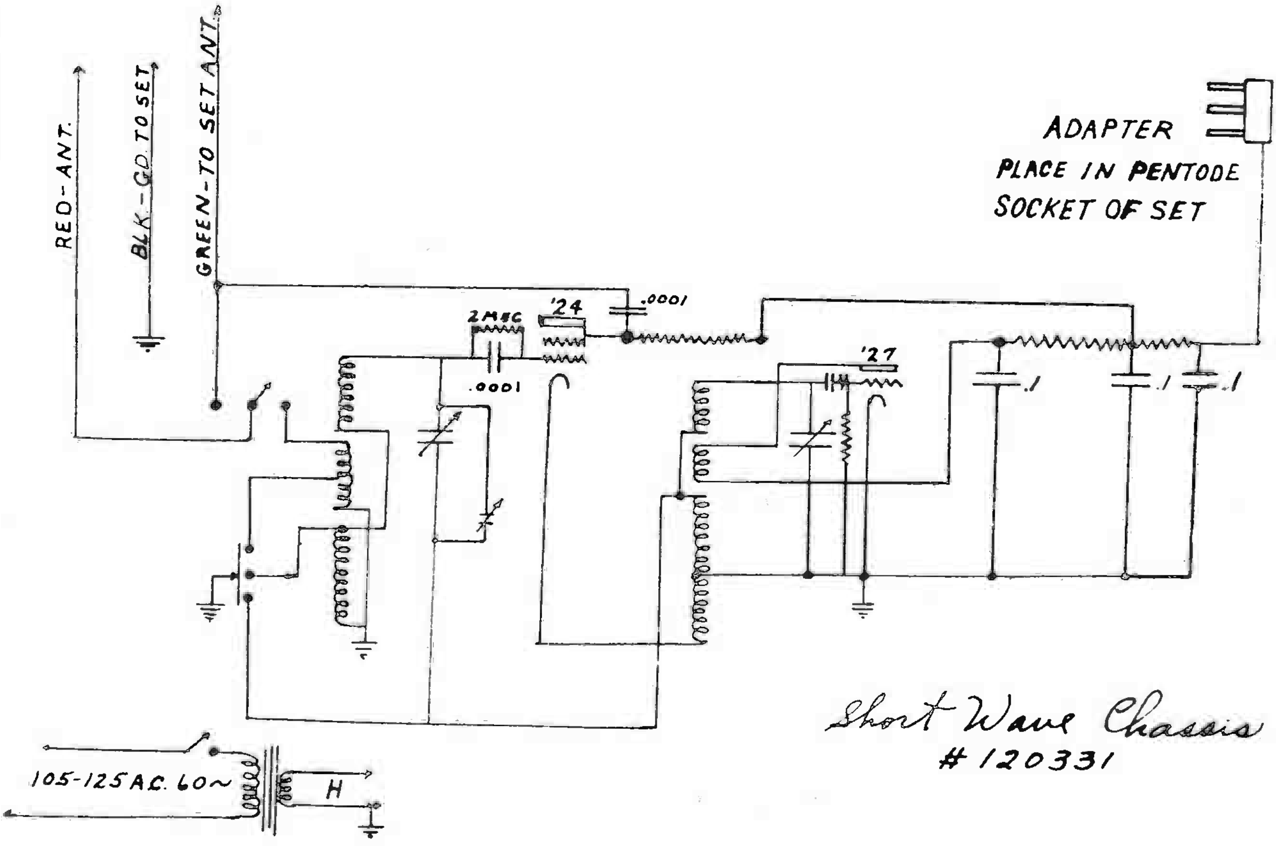

BALKEIT RADIO CO.

C_1 - .1 MFD. COND. - 200 VOLT.
C_2 - DUAL COND.: 1/10 MFD. SEC. 200V. - 1/4 MFD. SEC. 300V.
C_3 - .1 MFD. COND.
C_4 - .004 MFD.
C_5 - DUAL 6 MFD.

R_1 - 300 OHM 1/2 WATT.
R_2 - 15,000 OHM VOLUME CONTROL.
R_3 - 100,000 OHM 1/2 WATT.
R_4 - 800 " " "
R_5 - 500,000 " " "
R_6 - 29,000 OHMS TAPPED AT 14,000 OHMS. 1½ WATTS PER SEC.
R_7 - 30,000 OHMS - 1/2 WATT.
R_8 - 10,000 OHMS TO 1 MEGOHM TONE CONTROL.
R_9 - 20 OHM C.T.
R_{10} - 20 OHM C.T.
R_{11} - 700 OHM - 1 WATT.

L_1 - ANTENNA COIL.
L_2 - R.F. COIL.
L_3 - OSC. COIL.
I.F. - INTERMEDIATE FREQUENCY TRANSFORMER ASSEMBLY.

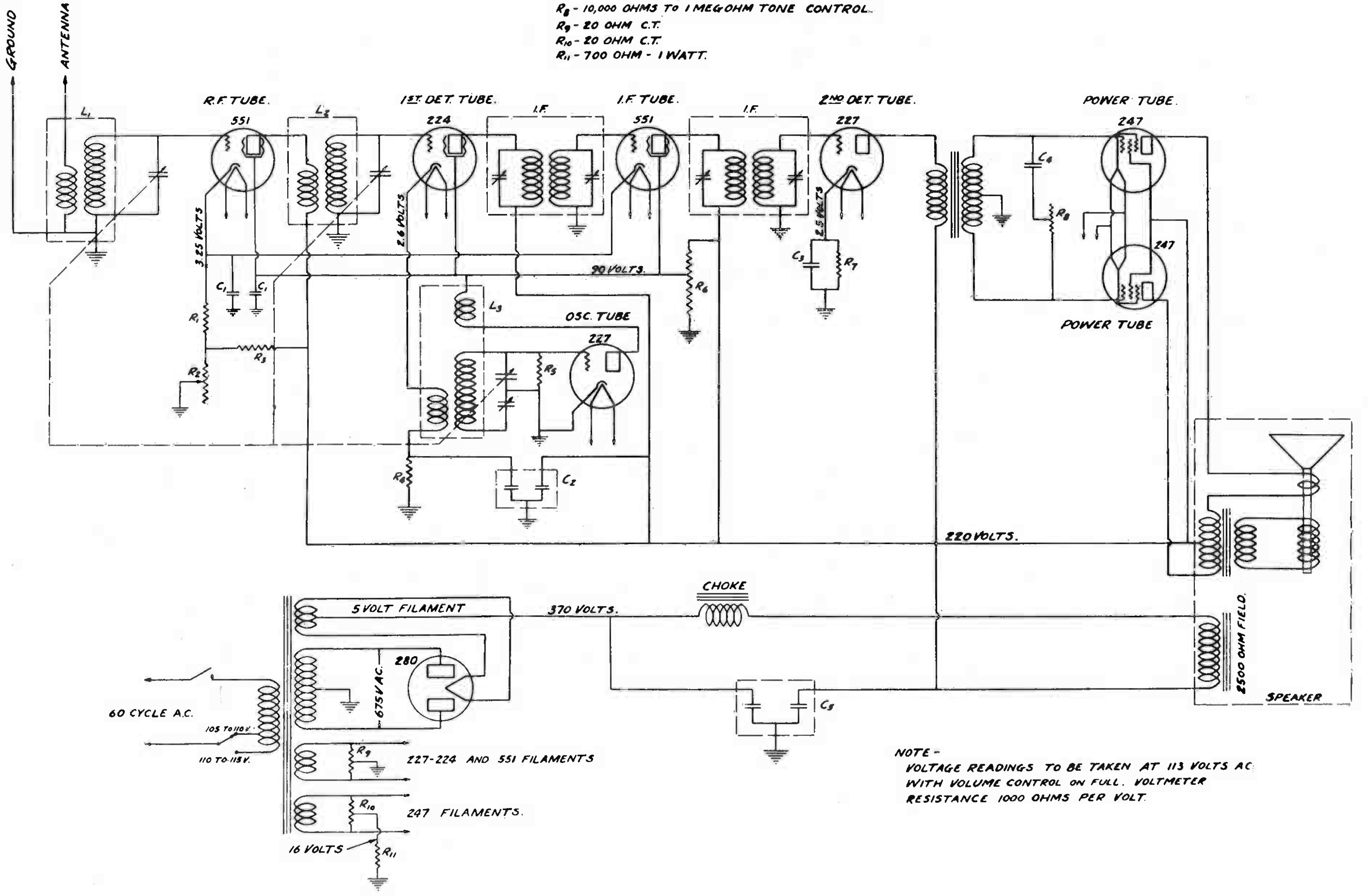

NOTE -
VOLTAGE READINGS TO BE TAKEN AT 113 VOLTS AC WITH VOLUME CONTROL ON FULL. VOLTMETER RESISTANCE 1000 OHMS PER VOLT.

BALKEIT RADIO CO.

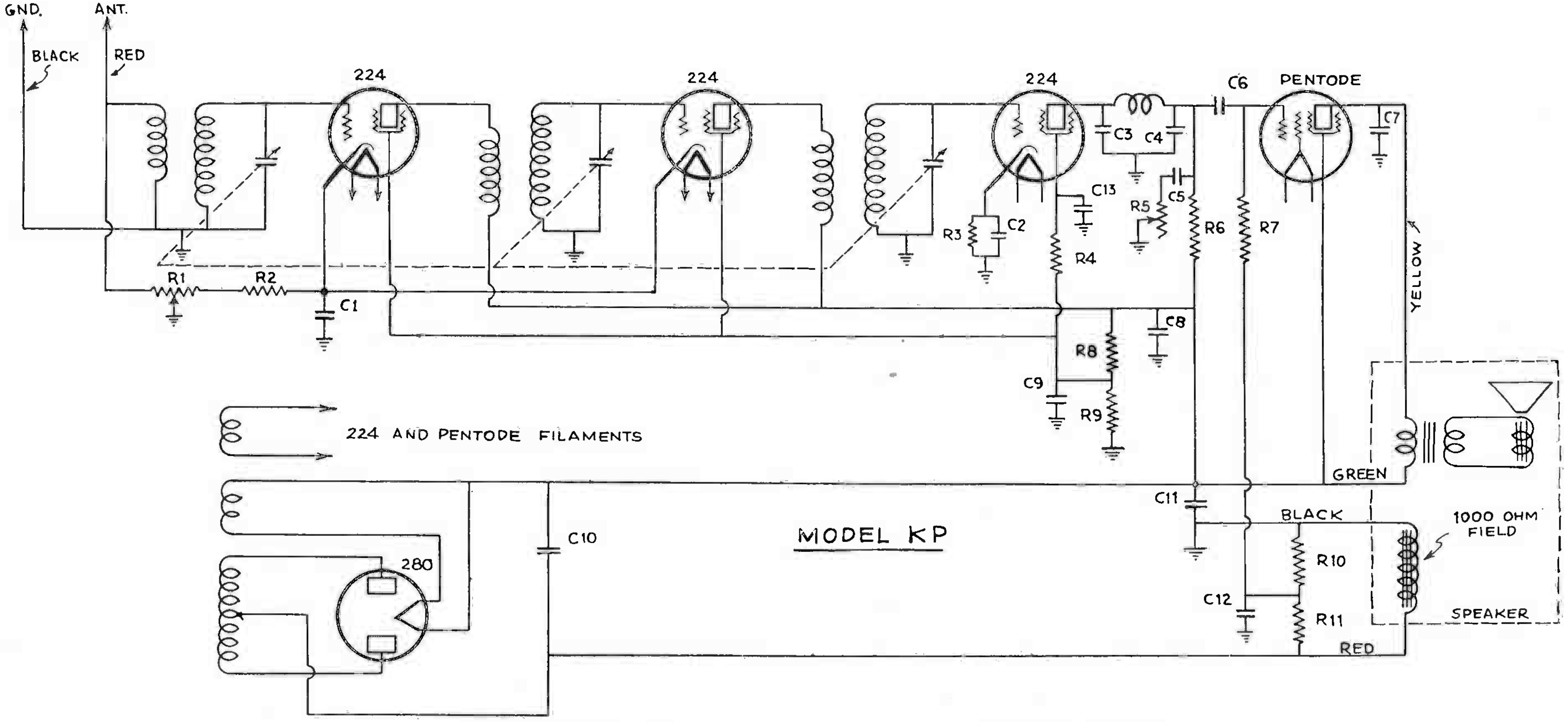

~CONDENSER CAPACITIES~

C1 = .1-MF.
C2 = .1-MF.
C3 = .0005-MF.
C4 = .0005-MF.
C5 = .005-MF.
C6 = .006-MF.
C7 = .005-MF.
C8 = .25-MF.
C9 = .1-MF.
C10 = 8 MF.
C11 = 8 MF.
C12 = .1-MF.
C13 = .1-MF.

~RESISTOR VALUES~

R1 = 15,000 OHM VOLUME CONTROL
R2 = 425 OHMS
R3 = 25,000 OHMS
R4 = 0.25-MEG.
R5 = 1 MEG. TONE CONTROL
R6 = 0.25-MEG.
R7 = 1 MEG.
R8 = 0.1-MEG.
R9 = 0.25-MEG.
R10 = 0.1-MEG.
R11 = 0.5-MEG.

BALKEIT RADIO CO.

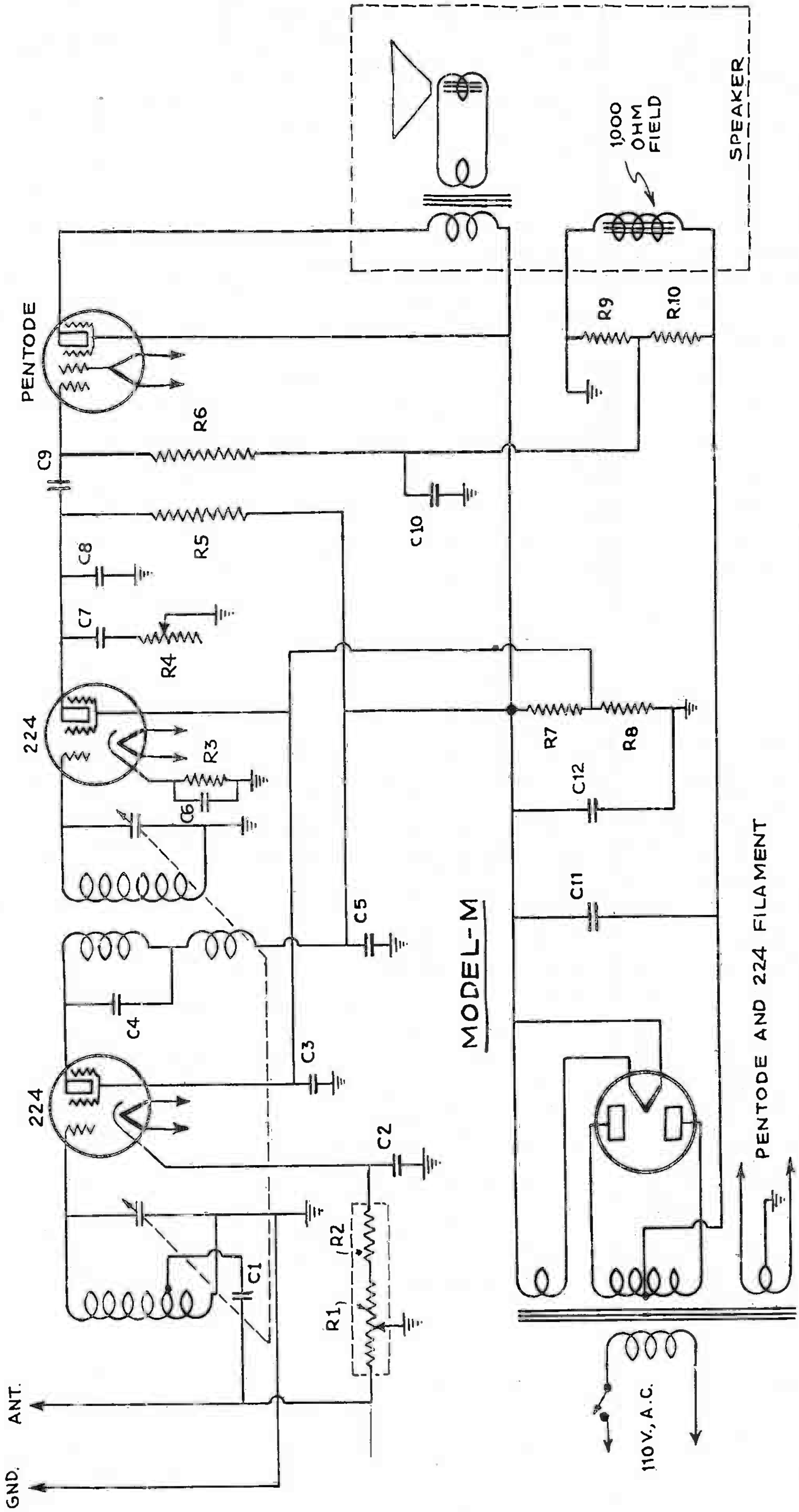

~ RESISTOR VALUES ~
R1 = 15,000 OHM VOLUME CONTROL
R2 = 300 OHM (IN SAME CASE AS VOL. CONTROL
R3 = 25,000 OHMS.
R4 = 1 MEG. TONE CONTROL
R5 = 0.25-MEG.
R6 = 1 MEG.
R7 = 0.1-MEG.
R8 = 0.25-MEG.
R9 = 0.1-MEG.
R10 = 0.5-MEG.

~ CONDENSER CAPACITIES ~
C1 = .0005 MF.
C2 = .1-MF.
C3 = .1-MF.
C4 = .000035-MF.
C5 = .25-MF.
C6 = .1-MF.
R7 = .0005-MF.
R8 = .0005-MF.
C9 = .005-MF.
C10 = .1-MF.
C11 = 8 MF.
C12 = 8 MF.

BROWNING DRAKE CORP.

MODEL JR.

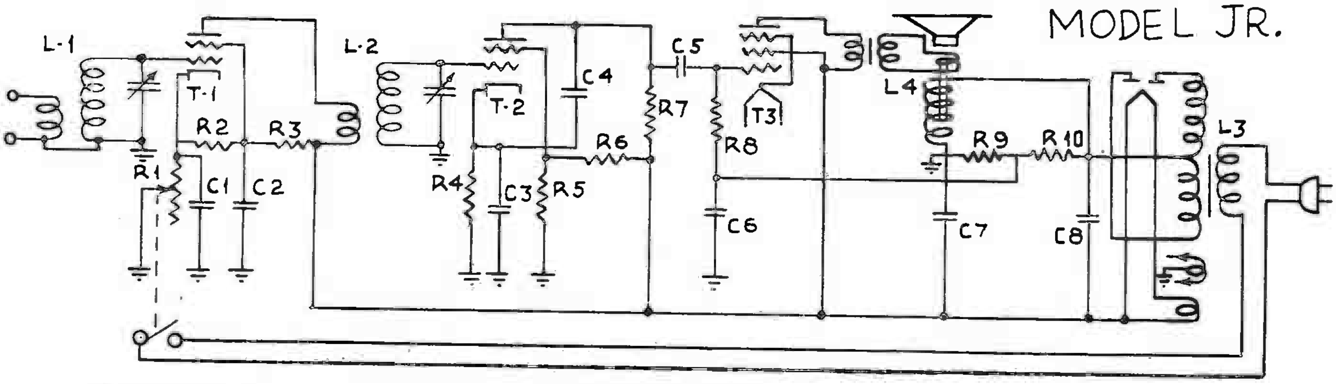

RESISTORS

	DWG. 205 VOL CONTR.
R1 - 10,000 OHM	
R2 - 40,000	331
R3 - 40,000	331
R4 - 50,000	331
R5 - .1 MEG	304
R6 - 2	304
R7 - .25	304
R8 - 2	304
R9 - .1	304
R10 - .5	304

CONDENSERS

C1 -	.1 MF	200V	N.I.
C2 -	.01		M
C3 -	.1	200	N.I.
C4 -	.00025		M
C5 -	.01		M
C6 -	.1	200	N.I.
C7 -	8		E1.
C8 -	8		.E1.

COILS

L1- ANT DWG 194
L2- INT. "
L3 - P.T. RAD.COMB.2
L4- SPKR.-2500 w
FIELD 7000 w
INPUT.

TUBES

T1 - 235
T2 - 224
T3 - 247
T4 - 280

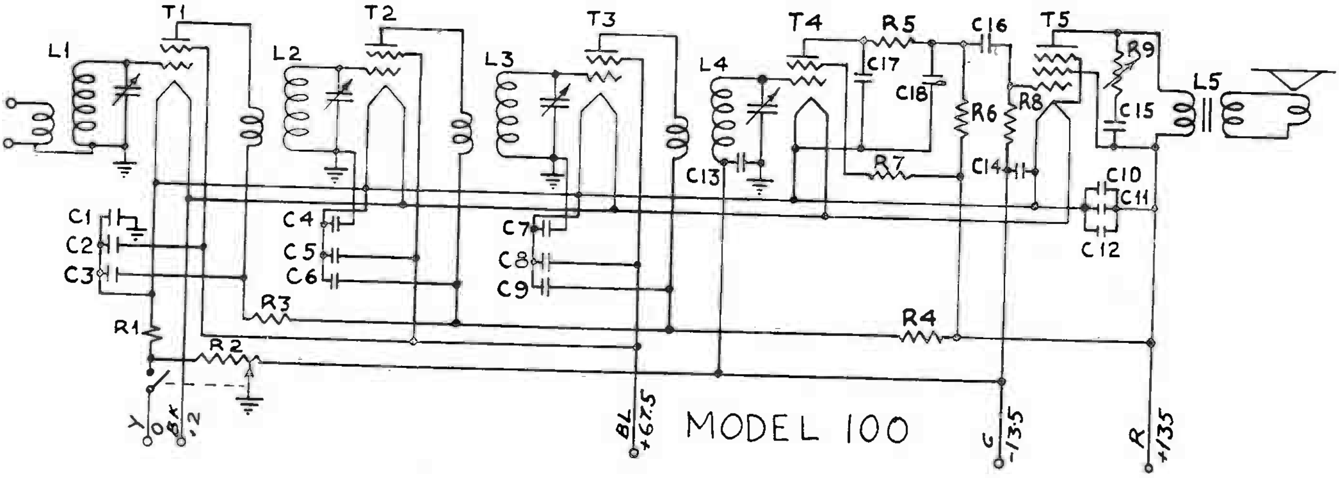

MODEL 100

CONDENSERS

1. 3x.1 MF
2. SK 5-25
3.
4.
5. "
6.
7.
8. "
9.
10
11 "
12
13. .1 MF TUB.
14. "
15. "
16 .01 MIDG
17. .00025 MIDG
18. "

COILS

1. DWG 194 ANT.
2. DWG. 194 INT.
3. "
4. "
5. SPKR. OUTP.

TUBES

1. 232
2. "
3. "
4. "
5. 233

RESISTORS

1. 1 OHM ADJUSTABLE
2. VOL.CONTR. DWG 205 ITEM A
3 2000 OHM
4 "
5. 20,000 OHM
6. .25 MEG.
7. 2 MEG.
8 "
9. TONE CONTR. DWG. 205 ITEM B.

BROWNING DRAKE CORP.

CONDENSERS

1	3x .1 MF		10.	.1	TUB.
2	BLOCK		11.	.1	TUB.
3	DWG#		12	8	ELEC.
4	.5 MF	DWG#169 REV.D	13.	8	ELEC.
5	.1		14.	.01	MIDG
6	.2		15.	.01	MIDG
7.	.00025	MIDG.	16.	.1	TUB
8.	.00025	.MIDG.			
9.	.01	MIDG.			

RESISTORS

1.	VOL. CONTR. DWG#205		10.	.15 MEG	304
2.	100000 OHM	331	11.	1 MEG	304
3.	20000	331	12.	3000	331 Ⓒ
4.	90000	331	13.	.25 MEG	304 Ⓐ
5.	50000	331	14.	3000	331 Ⓑ
6.	20000	331	15.	.15 MEG	Ⓕ
7.	.5 MEG.	304 Ⓔ			
8.	TONE CONTR. DWG#205				
9.	2 MEG	304			

COILS

1. ANTENNA DWG#223
2 INTERSTAGE RF DWG#223
3. INTERMD'TE D.J. TYPE S
4. "
5. OSCILLATOR DWG#223
6. SPEAKER
7. POWER A.E.CO T-348-A.

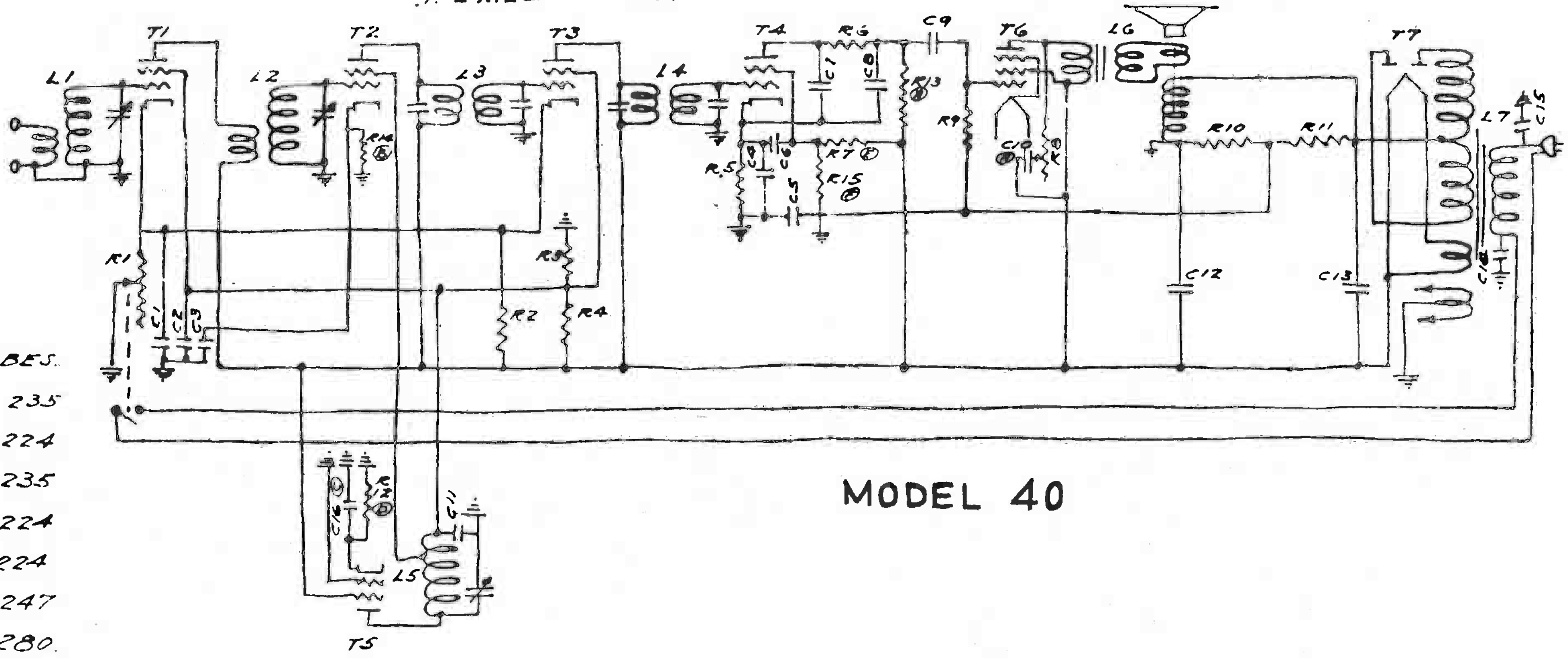

TUBES.

1.	235
2.	224
3.	235
4.	224
5.	224
6.	247
7.	280.

MODEL 40

BROWNING DRAKE CORP.

MODEL 54

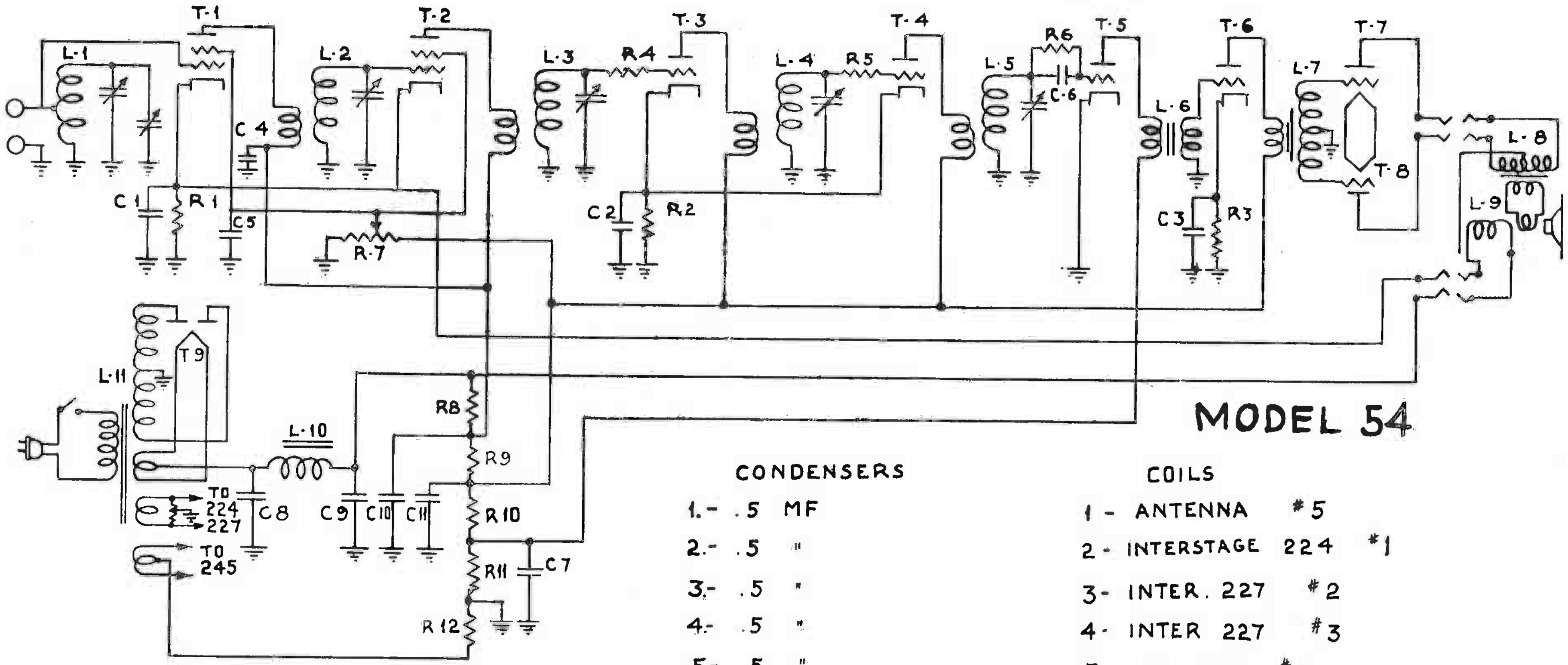

CONDENSERS

1.- .5 MF
2.- .5 "
3.- .5 "
4.- .5 "
5.- 5 "
6.- .00025 MF
7.- 1 MF
8. } ELECTROLYTIC
9. } FOUR 8 MF
10 } SECTIONS
11.}

COILS

1 - ANTENNA #5
2 - INTERSTAGE 224 #1
3 - INTER. 227 #2
4 - INTER 227 #3
5 - DETECTOR #4
6 - FIRST AUDIO
7 - P. P. AUDIO
8 - SPKR. OUTPUT
9 - SPKR. FIELD. 7500 OHM
10 - CHOKE
11 - POWER TRANS.

TUBES

1 - 224
2 - 224
3 - 227
4 - 227
5 - 227
6 - 227
7 - 245
8 - 245
9 - 280

RESISTORS

1 - 90 OHM
2 - 1000 OHM
3 - 2000 OHM
4 - 2000 OHM
5 - 2000 OHM
6 - 3 MEG.
7 - VOL CONTROL 10.000 OHM

VOLTAGE DIVIDER
8 2600 OHMS
9 3900 "
10 3450 "
11 4500 "
12 850 "
(W.L. TYPE "C" 15300 OHMS)

BROWNING DRAKE CORP.

RESISTORS

R1-VOLUME CONTROL DWG. 205 ITEM A
R2 - 10,000 331
R3 - 5000 304
R4 - 50.000 331
R5 - 20.000 331
R6 - 50.000 331
R7 - 50.000 304
R-8 - 2 MEG. 304
R9 - 100,000 304
R10 - .25 MEG 304
R11 - 2. MEG 304
R12 - TONE CONTROL DWG. 205 ITEM B
R13 - .15 MEG 304
R14 - 1. MEG 304
R15 - 5 000 331
R16 - 50.000 304

TUBES

T1 - 235 RF
T2 - 224 OSC
T3 - 224 1ST DET
T4 - 235 IF
T5 - 224 2ND DET
T6 - 247 OUT.
T7 - 280 RECT

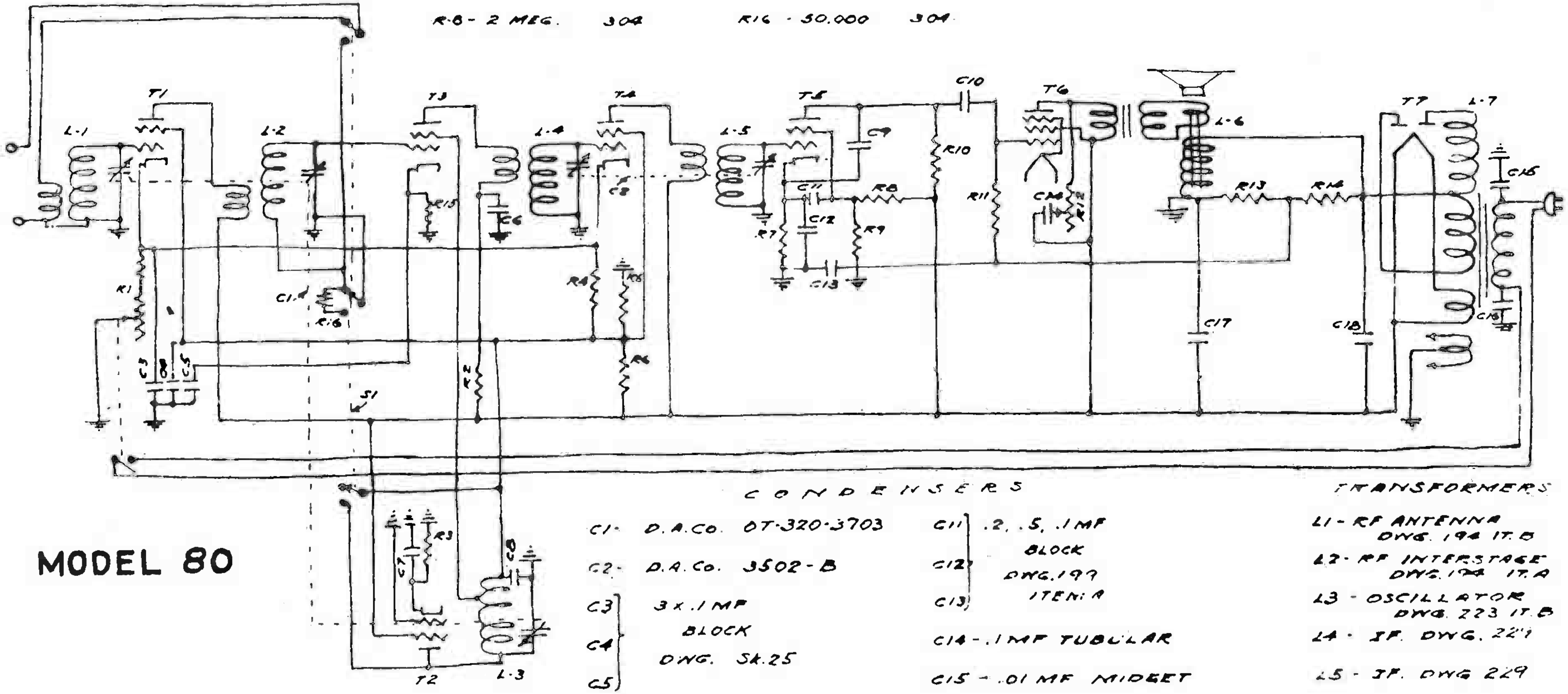

MODEL 80

CONDENSERS

C1 - D.A.Co. 0T-320-3703
C2 - D.A.Co. 3502-B
C3, C4, C5 - 3 x .1 MF BLOCK DWG. SK.25
C6 - .1 MF TUBULAR
C7 - .1 MF "
C8 - .1 MF "
C9 - .00025 MF MIDGET
C10 - .01 MF "
C11, C12, C13 - .2, .5, .1 MF BLOCK DWG. 197 ITEM A
C14 - .1 MF TUBULAR
C15 - .01 MF MIDGET
C16 - .01 MF MIDGET
C17 - 8. MF ELECTROLYTIC
C18 - 8 MF "

TRANSFORMERS

L1 - RF ANTENNA DWG. 194 IT. B
L2 - RF INTERSTAGE DWG. 194 IT. A
L3 - OSCILLATOR DWG. 223 IT. B
L4 - IF. DWG. 229
L5 - IF. DWG 229
L6 - SPEAKER R.Co. FP 2500
L7 - POWER A.E.Co. T-348-A

S1 - TRANSFER SWITCH C.R.Co. Y-33

BROWNING DRAKE CORP.

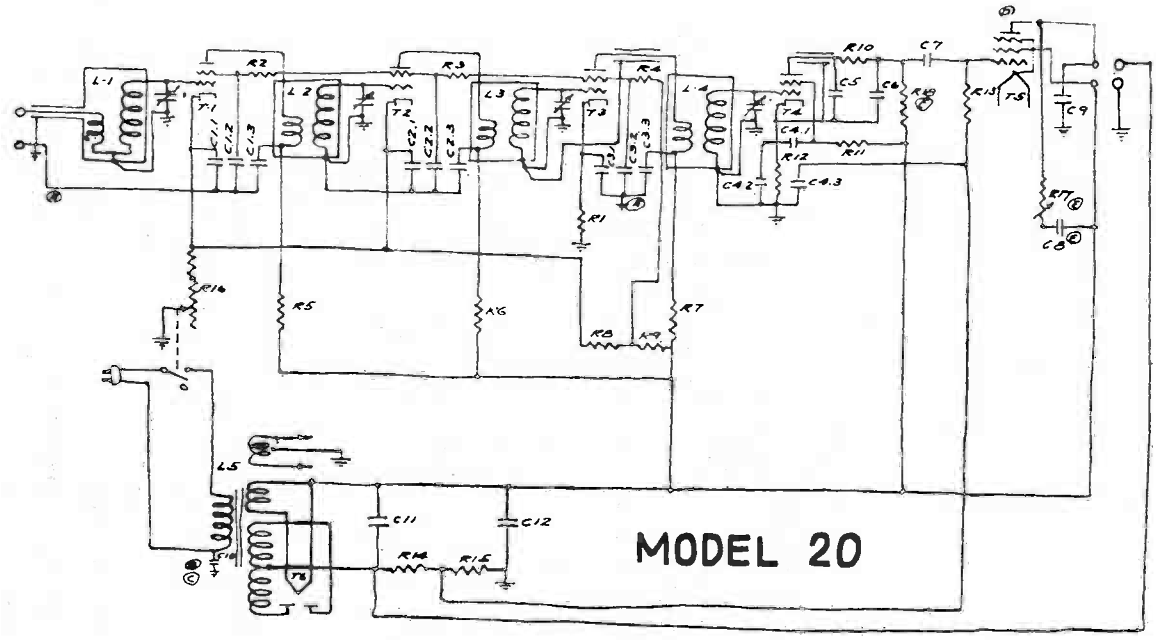

RESISTORS

1.						
1.	2000	ohms	type	304	8	volts
2.	10,000	"	"	304	10	"
3.	"	"	"	"	"	"
4.	"	"	"	"	"	"
5.	20,000	"	"	304	50	"
6.	"	"	"	"	"	"
7.	"	"	"	"	"	"
8.	40,000	"	"	331	80	"
9.	50,000	"	"	331	80	"
10.	20,000	"	"	304	50	"
11.	2 Meg.		"	304	10	"
12.	50,000	ohm	"	304	10	"
13.	2 Meg.		"	304	10	"
14.	.5	"	"	304	10	"
15.	.1	"	"	304	10	"
16.	Vol. Contr.		Dwg. No.	205		
17.	Tone Contr.		Dwg. No.	205		
18.	.25 Meg.			304		

CONDENSERS

1.1	.61 MF	.5	MF.	200	volt
1.2		.1	"	200	"
1.3		.01	"	300	"
2.1	.61 MF			"	
2.2					
2.3					
3.1	.61 MF				
3.2				"	
3.3					
4.1	18	.2	Mf	200	volt
4.2		.5	"	200	"
4.3		.1	"	200	"
5.		.00025	MF		
6.		"	"		
7.		.01	"		
8.		.1	Tub.		
9.		.01	"		
10.		.01	"		
11.		8	Mf Elec.		
12.		8	" "		

TUBES

1	224
2	"
3	"
4	"
5	247
6	280

BULOVA CLOCK CO.

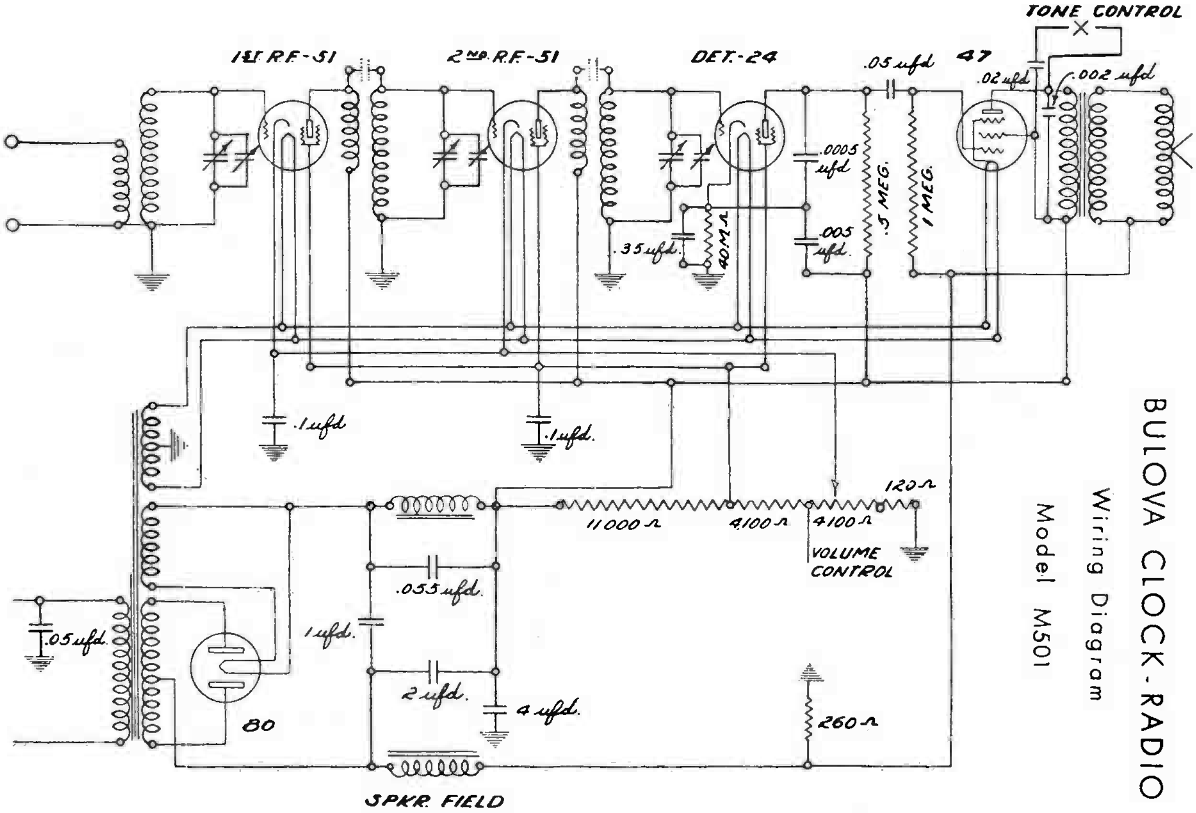

BULOVA CLOCK-RADIO
Wiring Diagram
Model M501

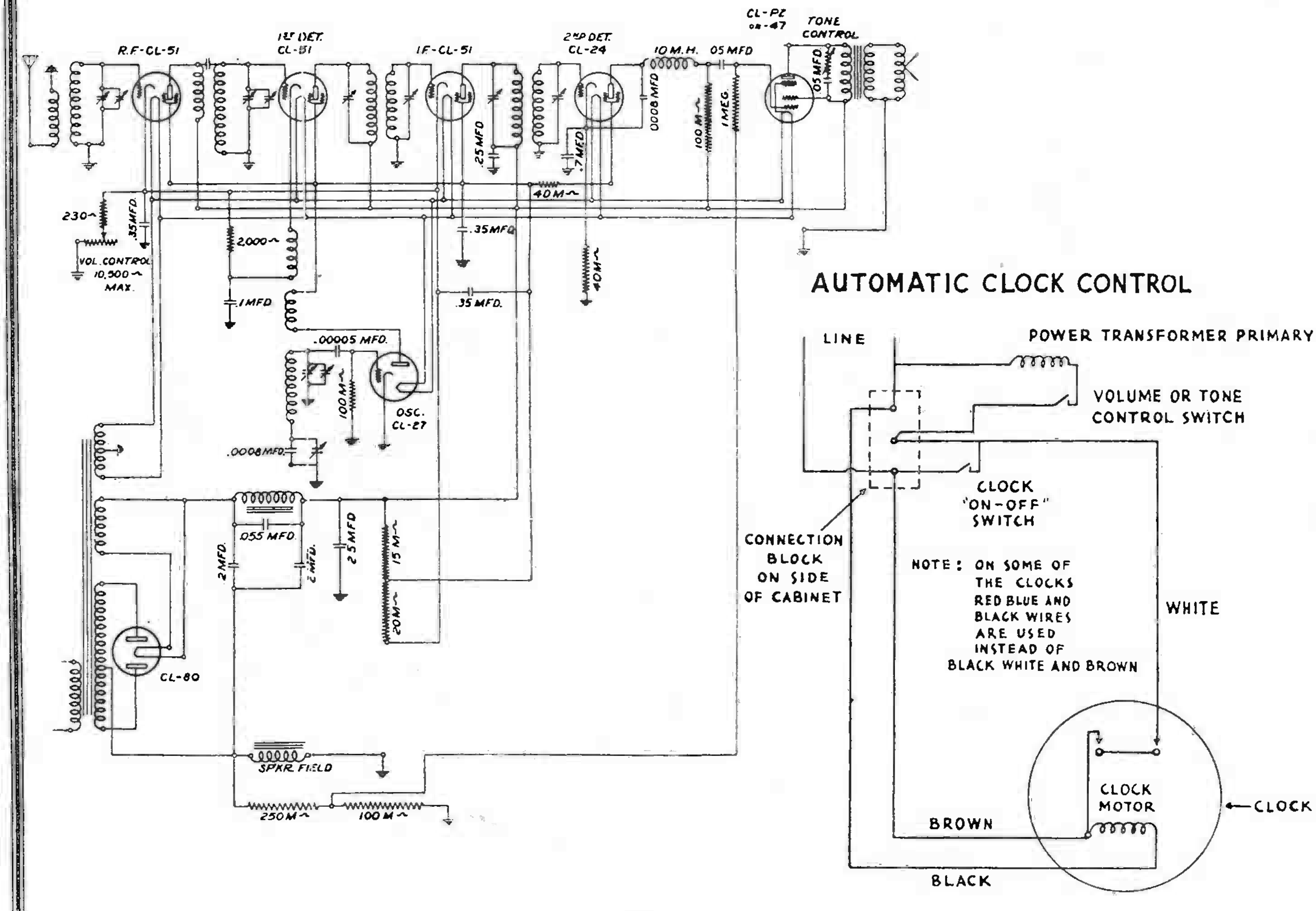

NOTE: ON SOME OF THE CLOCKS RED BLUE AND BLACK WIRES ARE USED INSTEAD OF BLACK WHITE AND BROWN

Bulova Clock Radio—Model M-701

BULOVA CLOCK CO.

Model C751

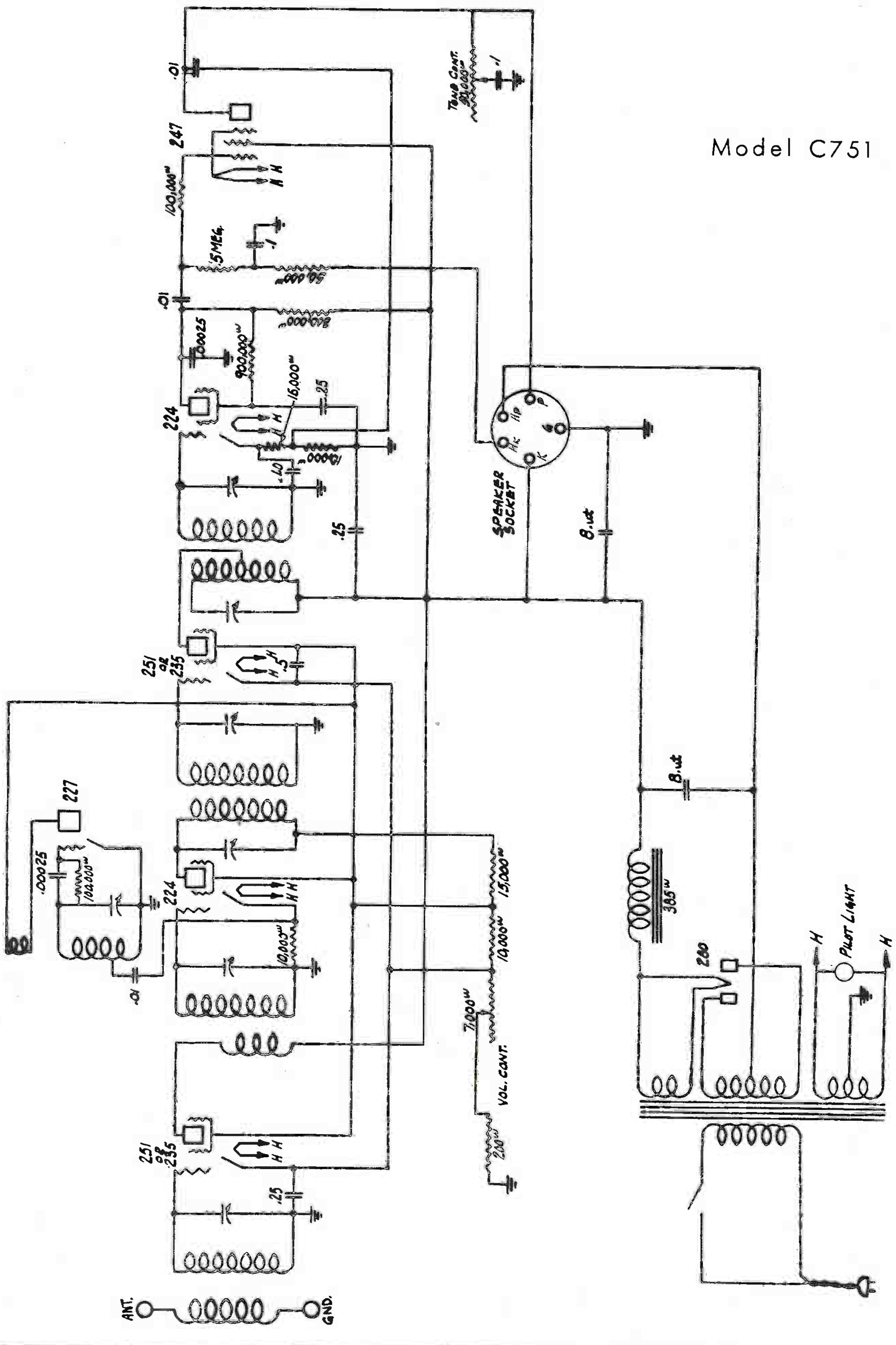

CANADIAN MARCONI CO.

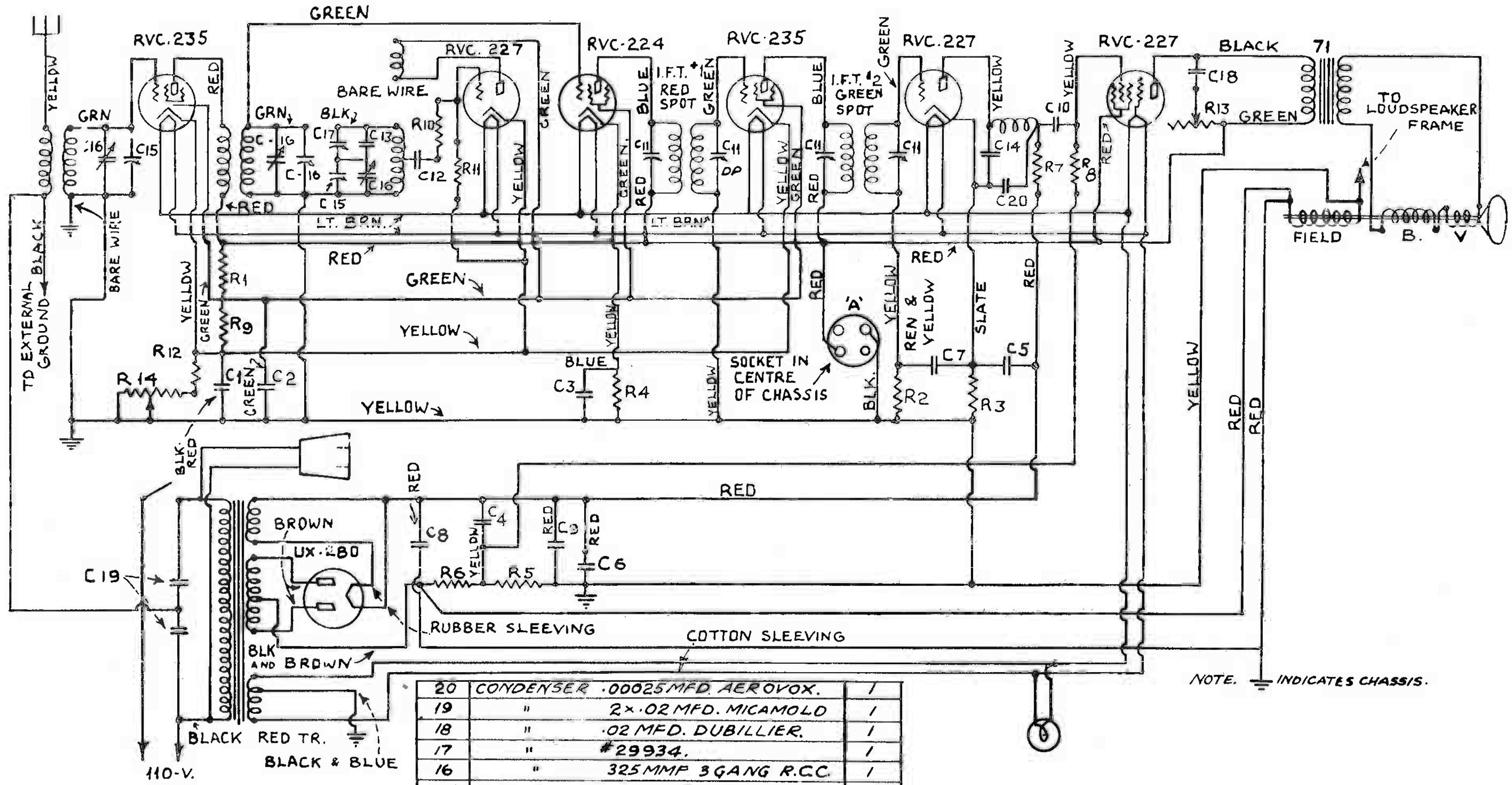

20	CONDENSER ·00025 MFD. AEROVOX.	1
19	" 2×·02 MFD. MICAMOLD	1
18	" ·02 MFD. DUBILLIER.	1
17	" #29934.	1
16	" 325 MMF 3 GANG R.C.C.	1
15	" TRIMMER. 3 GANG R.C.C.	1
14	" ·0025 MFD. DUBILLIER.	1
13	" 680 MMF. "	1
12	" 750 MMF "	1
11	" MARCONI #29888.	4
10	" ·02 MFD. AEROVOX.	1
9	" 8 MFD. MERSHON. ELECTROLYTIC	1
8	" 6 MFD. MERSHON. "	1
7	" 0.05 MFD.	1
6	" 0.5 MFD.	1
5	" 0·5 MFD.	1
4	" 0·5 MFD. HYDRA.	1
3	" 0·1 MFD.	1
2	" 1 MFD.	1
1	" 0·5 MFD.	1
CONDENSERS		

14	RESISTOR. 4500ω EBY.
13	RESISTOR. HALF MEG. ELECTRAD.
12	RESISTOR. 150ω DURHAM. TYPE MF4-2
11	RESISTOR 40000ω DURHAM TYPE MF4-2
10	RESISTOR 6000ω DURHAM TYPE MF4-2
9	RESISTOR. 8000ω DURHAM TYPE MF4-2
8	RESISTOR 100,000ω DURHAM TYPE MF4½-2
7	RESISTOR 100,000ω DURHAM TYPE MF4½-2
6	RESISTOR 350,000ω DURHAM TYPE MF4-2
5	RESISTOR 40,000ω DURHAM TYPE MF4-2
4	RESISTOR 10.000ω DURHAM TYPE MF4-2
3	RESISTOR 30.000ω DURHAM TYPE MF4-2
2	RESISTOR. 1000.000ω DURHAM TYPE MF4-2
1	RESISTOR. 16000ω A.B. TYPE 'F'
RESISTANCES.	

26 S.W.

26 SIMILAR EXCEPT FOR LEADS TO S.W. CONVERTER OMITTED.

CANADIAN MARCONI CO.

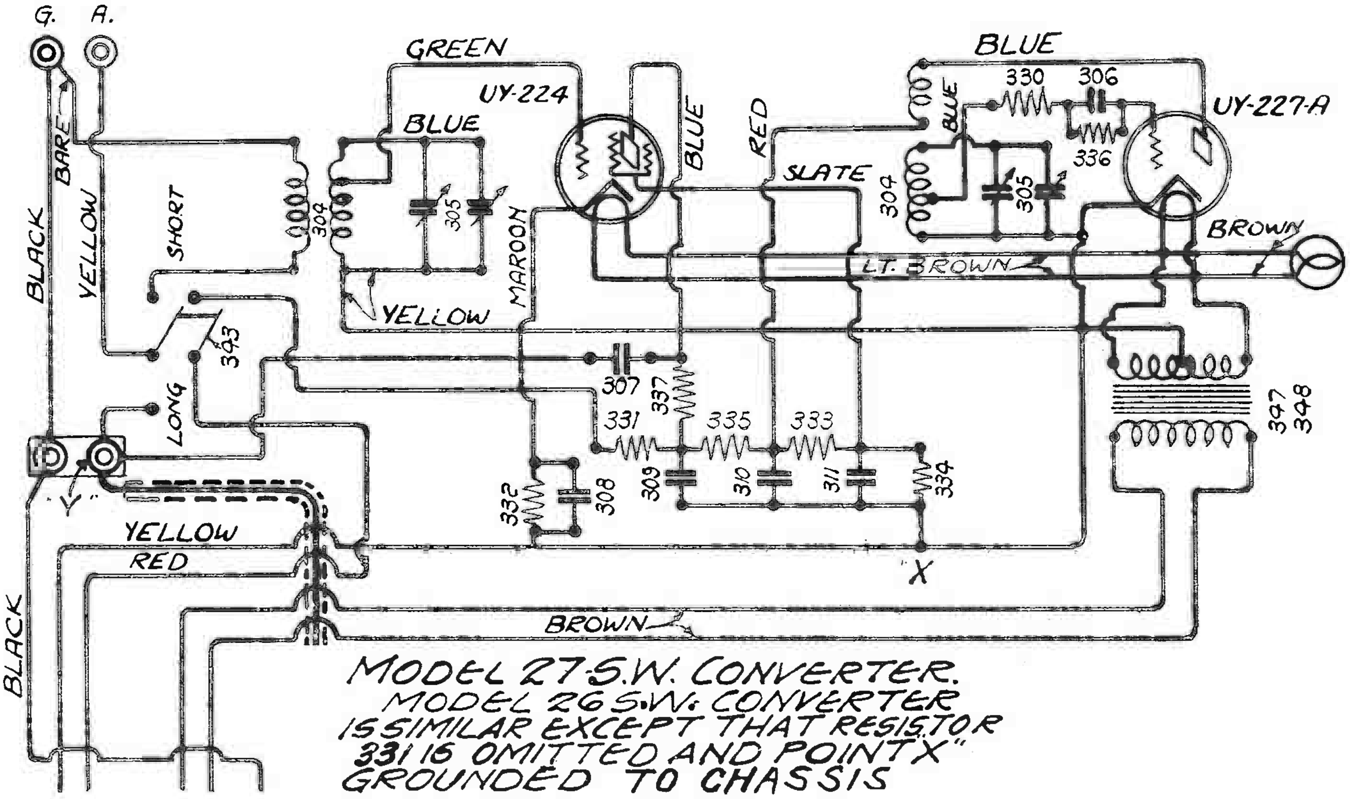

MODEL 27-S.W. CONVERTER.
MODEL 26 S.W. CONVERTER
IS SIMILAR EXCEPT THAT RESISTOR
331 IS OMITTED AND POINT "X"
GROUNDED TO CHASSIS

PARTS LIST FOR MODEL 26-S.W. AND 27-S.W. CONVERTER UNITS

No.	ARTICLE	Ref. No.	Price
301	Bracket for Pilot Lamp	30796	.15
302	Chassis M. 26 S.W. Converter, Less valves	30622	25.00
303	Chassis M. 27 S.W. Converter, Less valves	30622	25.00
304	Coil Detector Oscillator	30846	3.50
305	Condenser 2 Gang	30821	6.00
306	" .0001 Mf. +or — 10% Aerovox	1460	.50
307	" .00025 Mf. + or — 10% Aerovox	1460	.50
308	" .1 Mf. Dubilier 300v-706-3079		.50
309	" .1 Mf. Dubilier 300v-706-3079		.50
310	" .1 Mf. Dubilier 300v-706-3079		.50
311	" .1 Mf. Dubilier 300v-706-3079		.50
312	Cushion Rubber for rail	31880	.10
313	Cushion Rubber strip double	31865	.10
314	Cushion-Rubber strip Single	31866	.10
315	Dial Ass'y.	30982	1.25
316	Dial Only	30781	.90
317	Eyelets for Dial USMC.	200 Doz.	.05
318	Eyelets for No. 325 and 326 Stimpson	A611 Doz.	.10
319	Insulator strip (M27 SW Only)	31869	.05
320	Label valve position	30983	.05
321	Lead and Plug (Male) 110 volts	30858	.50
322	Lead and plug (4 Prong) "B" Volts	30859	.60
323	Plug cap 110 volts for No. 321 Halebro Cap No. 45		.10
324	Pluf 4 prong for No. 322 Eby 2010		.50
325	Plate, metal, double for No. 313	31863	.15
326	Plate metal, single for No. 314	31864	.15
327	Rail	30822	.40
328	Receptacle ass'y for pilot lamp	30860	.50
329	Resistor Ass'y. (Items 332, 333, 334, 336 and 337)	30786	
330	" .75 Ohms Durham MF.4½-2		.50
331	" 4,000 " (27 converter only)	MF- 4-2	.50
332	" 5,000 " Durham	MF-4½-2	.50
333	" 6,000 " "	MF- 4-2	.50
334	" 6,000 " "	MF- 4-2	.50
335	" 15,000 " "	MF- 4-2	.50
336	" 15,000 " "	MF-4½-2	.50
337	" 250,000 " "	MF-4½-2	.50
338	Shield, bottom cover	30824	1.25
339	Socket, 4 prong	29858	.50
340	Socket, 5 prong	29857	.60
341	Spacer, thick for No. 314	31867	.10
342	Spacer, thin for No. 313	31868	.10
343	Switch, change-over	30823	2.00
344	Terminal plate ass'y.	30957	.40
345	Terminal "A" Eby Spring type		.25
346	Terminal "G" Eby Spring type		.25
347	Transformer filament 25 cycle	30658	3.00
348	Transformer filament 60 cycle	30659	2.50

PARTS LIST FOR MODEL 26 S.W. CHASSIS

No.	ARTICLE	Ref. No.	Price
351	Cabinet	30966	50.00
352	Chassis, 26-S.W. (Less valves)	30621	60.00
353	Connector, Female, Halebro Cord connector Female No. 45		.75
354	Condenser .1Mf. Sprague Rolled Paper wire leads		.50
355	Condenser, Electrolyte 6 Mf. Mershon 6 Mf.		2.50
356	Condenser, Electrolyte 8 Mf. Mershon 8 Mf.		2.50
357	Knob ⅞" KBC R. 37-B		.40
358	Label, Paper 25 Cycle	30665	.05
359	Label, Paper 60 Cycle	30666	.05
360	Label, Metal 25 Cycle	30660	.20
361	Label, Metal 60 Cycle	30661	.20
362	Lead Ass'y. with female connector	30728	1.25
363	Plaque for dial	30871	.60
364	Plaue for switch	30711	.50
365	Resistor 29,000 Ohms Durham Mf.4½-2		.50
366	Resistor 140,000 Ohms (Replaces No. 276) Durham Mf. 4-2		.50
367	Resistor 1,000,000 Ohms (Replaces No. 278) Durham Mf. 4-2		.50

All other chassis parts are the same as Model 26, except as noted below.

NOTE the following changes for **Model 26 S.W.** and recent **Model 26.**

228	Condenser 8 Mf. replaced by No. 355 6 Mf.		2.50
229	Condenser 6 Mf. replaced by No. 356 8 Mf.		2.50
276	Resistor 40,000 Ohms replaced by No. 366 140,000 Ohms		.50
278	Resistor 350,000 Ohms, replaced by No. 367 1,000,000		.50
365	Resistor 29,000 Ohms added		.50
354	Condenser .1 Mf. added		.50
214	Receptacle Ass'y. change in price	30076	.50

CANADIAN MARCONI CO.

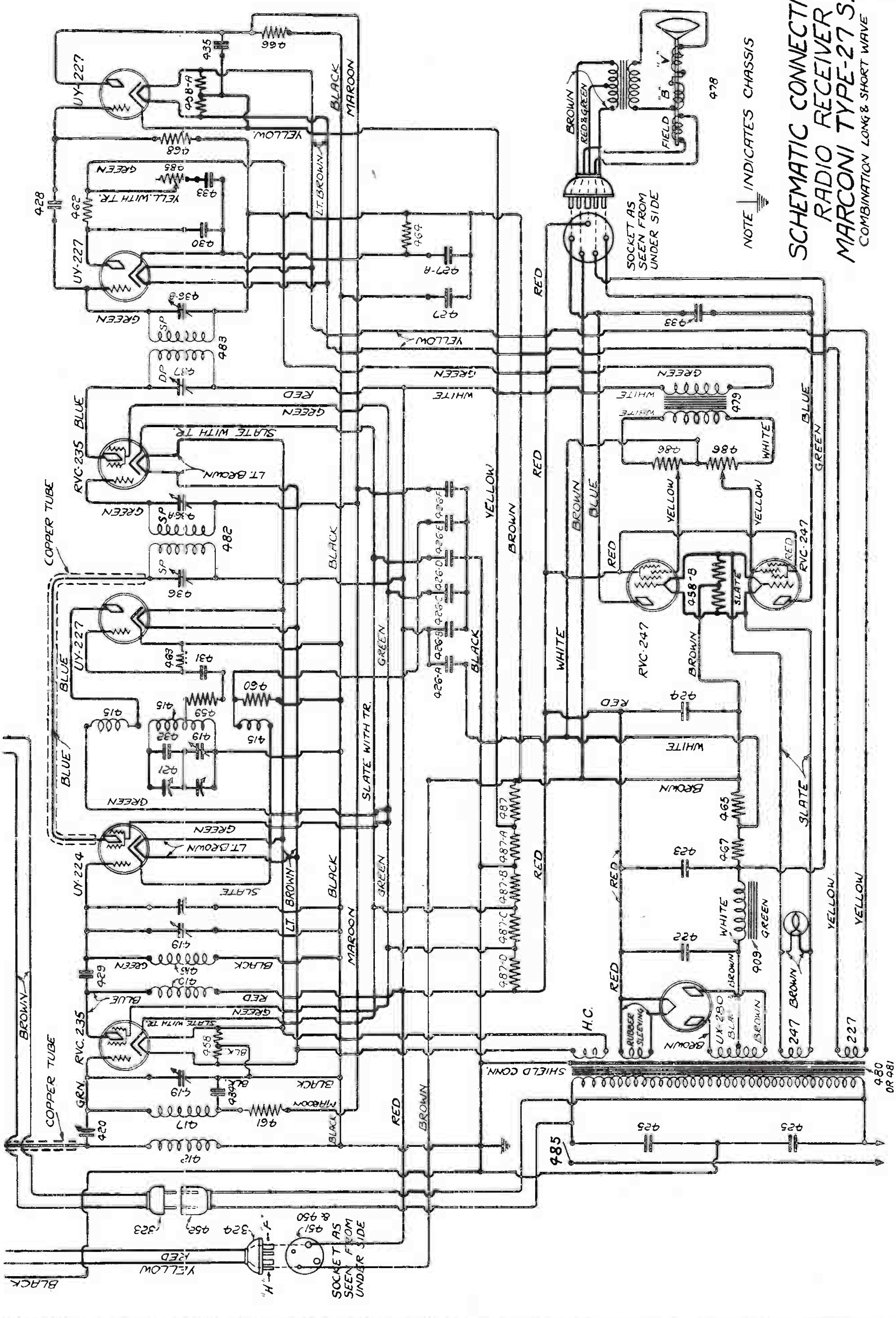

SCHEMATIC CONNECTIONS
RADIO RECEIVER
MARCONI TYPE-27 S.W.
COMBINATION LONG & SHORT WAVE

2153

NOTE ⏚ INDICATES CHASSIS

CANADIAN MARCONI COMPANY

CANADIAN MARCONI CO.

PARTS LIST FOR MODEL 27-S.W. CHASSIS

No.	ARTICLE	Ref. No.	Price
401	Bracket for Pilot Lamp	30646	$ .15
402	Bushing, rubber large	29890	.10
403	Bushing, rubber small	21926	.10
404	Cabinet	30973	65.00
405	Can. Valve Shielding	29832	.15
406	Can. base for Shielding	29831	.10
407	Cap, grid connector	UCF60161	.05
408	Chassis Assy. less valves	28993	90.00
409	Choke, filter	30613	5.00
410	Choke, Ass'y. R.F.	30580	.70
411	Choke, R.F. only	30603	.50
412	Coil Ass'y. Antenna	30579	1.50
413	Coil only Antenna	30567	1.00
414	Coil Ass'y. Oscillator with condenser	30725	2.00
415	Coil only Oscillator	30583	1.50
416	Coil Detector	30582	3.00
417	Coil R.F.	30581	1.50
418	Clamp, speaker plug	31339	.15
419	Condenser, tuning 3 gang	30754	10.00
420	“ Aerial adjusting 50 MMF.	29934	.60
421	“ Adjustable 600 K.C. tracking 100 MMF.	30477	.60
422	Condenser, Filter 8 Mf. 500 Volt Mershon	S-8-60067	2.75
423	“ Filter 6 Mf. 450 Volt Mershon	S-6-60064	2.50
424	Condenser, Filter 4 Mf. 450 Volt Mershon	S-4-60061	2.25
425	Condenser, Line filter, 2x.02 MF. Micamold	30337	1.25
426-A to F.	Condenser, Bypass 6 x .3 Mf. Hydra	30457	2.00
427	Condenser 1 Mf.	30458	1.50
427-A	“ .35 MF.		
428	“ 10.5 MMF. + or — 2%	32715	.60
429	“ 10.5 MMF. + or — 10% Dubilier	702	.50
430	“ 250 MMF. Aerovox	1460	.50
431	“ 750 MMF. + or — 10% “	1460	.50
432	“ 810 MMF. + or — 2% Dubilier	702	1.00
433	“ .004 MF. + or — 10% “	706-3013	.50
434	“ .02 MF. “	706-3066	.50
435	“ .04 MF. + or — 10% “	706-3070	.50
436-A-B	“ Adjustable 0-70 Mmf.	30480	.60
437	“ Adjustable 70-140 Mmf.	30467	.60
438	Cushion, Rubber for rail	29815	.10
439	Dial assy.	30698	.75
440	Dial only	30476	.15
441	Drive assy.	29861	.75
442	Knob with set screw 1⅛" KBC R. 37B	30082	.40
443	Knob with set screw 1" “ “	30083	.40
444	Knob with set screw ⅞" “ “		.40
445	Label-paper 25 cycle	30986	.05
446	Label-paper 60 cycle	30985	.05
447	Label, Metal rating 25 cycle	30809	.10
448	Label, Metal rating 60 cycle	30810	.10
449	Lead with 3 way plug 110 volt	30075	1.00
450	Lead with connector	31614	1.25
451	Plug 3 way Halebro		.50
452	Plug connector Female Halebro Cord conn.		.75
453	Pilot Lamp socket assy.	32700	.50
454	Plaque, large	30039	.80
455	Plaque, small	30871	.60
456	Plaque for switch	30711	.50
457	Rail	30723	.40
458-A-B	Resistor 20 Ohm center tap, Carter Mfg. Type		.50
459	Resistor 5,000 Ohms ½ Watt Durham Mf.	4½-2.	.50
460	“ 10,000 “ “ “	“	.50
461	“ 15,000 “ “ “	“	.50
462	“ 25,000 “ “ “	“	.50
463	“ 40,000 “ “ “	“	.50
464	“ 50,000 “ “ “	“	.50
465	“ 140,000 “ “ “	“	.50
466	“ 250,000 “ “ “	“	.50
467	“ 350,000 “ “ “	“	.50
468	“ 1,000,000 “ “ “	“	.50
469	Shield, bottom cover	30726	.50
470	“ case for Det. Coil	30641	.50
471	Shield case for Osc. and R.F. Coils	26161	.25
472	“ base for Det. Osc. and R.F. Coils	30573	.15
473	“ for tuning condenser	30575	.40
474	“ for filter condenser	30600	.60
475	Socket 4 Prong	29858	.50
476	Socket 5 Prong	29857	.60
477	Spindle, drive	29860	.15
478	Speaker with transformer, cord and plug	30662	15.00
479	Transformer Audio	30399	5.00
480	“ Power 25 cycle	30612	18.00
481	“ Power 60 cycle	30615	15.00
482	“ I.F. No. 1 Green spot	30464	3.50
483	“ I.F. No. 2 Yellow spot	30465	3.50
484	“ Output, on speaker		5.00
485	Tone control with switch	30481	2.00
486	Volume control	30482	1.50
487	Voltage divider 733 ohms	30627	2.00
487-A	“ “ 3400 “		
487-B	“ “ 83 “		
487-C	“ “ 6500 “		
487-D	“ “ 3900 “		

CANADIAN MARCONI CO.

MODEL 31 - 31 SW

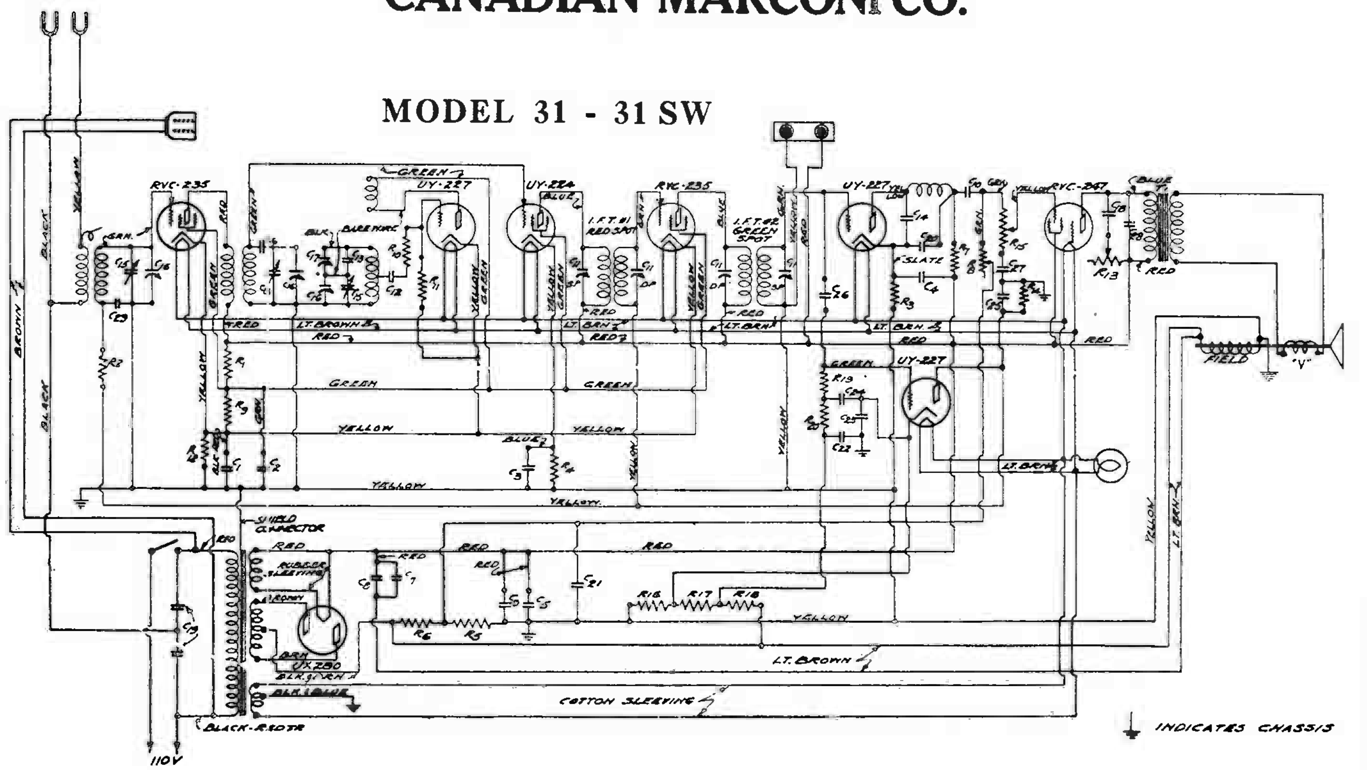

CONDENSERS

Ref.	Part No.	Capacity	Type No.	List Price
C-1	701	0.5 mf	32864	4.00
C-2		1 mf		
C-3		0.1 mf		
C-4		0.5 mf		
C-5		0.5 mf		
C-6	702	.04 mf + or — 2%	200 vt. Tubular	.50
C-7	703	8 mf	Electrolytic	2.50
C-8	703	8 mf	"	2.50
C-9	704	6 mf	"	2.50
C-10	705	0.02 Mf	Aerovox Moulded	.50
C-11	706		I.F. Trimmer No. 29888	
C-12	707	750 mmf	"Toothpick"	.50
C-13	708	800 mmf + or — 2%	"	.50
C-14	709	0.0025 mf	"	.50
C-15	710	380 mmf	"	.50
C-16			Trimmer	
C-17	711		600 KC Trimmer No. 29934	.60
C-18	712	.1 mf	Tubular	.50
C-19	713	2x.02 mf	30337	1.25
C-20	714	.00025 mf	Polymet Moulded	.50
C-21	715	.04 mf	Tubular	.50
C-22	712	.1 mf	"	.50
C-23	712	.1 mf	"	.50
C-24	712	.1 mf	"	.50
C-25	715	.04 mf	"	.50
C-26	716	25 mmf	"Toothpick"	.50
C-27	717	.25 mf	Tubular	.50
C-28	718	.004 mf	"	.50
C-29	715	.04 mf	"	.50

RESISTORS

Ref	Part No.	Resistance	Type	List Price
R-1	720	16,000 Ohms	Durham, MR6	.75
R-2	721	25,000 "	" MF 4½-2	.50
R-3	722	30,000 "	" MF 4 -2	.50
R-4	723	10,000 "	" MF 4 -2	.50
R-5	724	40,000 "	" MF 4 -2	.50
R-6	725	350,000 "	" MF 4 -2	.50
R-7	726	100,000 "	" MF 4½-2	.50
R-8	775	200,000 "	Potentiometer No. 33127	1.25
R-9	727	8,000 "	Durham, MF 4 -2	.50
R-10	728	6,000 "	" MF 4 -2	.50
R-11	729	40,000 "	" MF 4½-2	.50
R-12	730	150 "	" MF 4½-2	.50
R-13	794	100,000 "	Tone Control No. 33304	1.50
R-14	731	1.5 Meg "	Durham, MF 4½-2	.50
R-15	795	800,000 "	Volume control No. 33149	2.00
R-16	732	500,000 "	Durham, MF 4½-2	.50
R-17	733	120,000 "	" MF 4½-2	.50
R-18	726	100,000 "	" MF 4½-2	.50
R-19	734	2 Meg "	" MF 4½-2	.50
R-20	735	1 Meg "	" MF 4½-2	.50

VOLTAGE READINGS FOR MODEL 31

Position	Type	Plate Volts	Plate Current	Screen Volts	Grid Volts	Heater Volts A.C.
R. F.	235-A	235	3	55	Nil	2.5
1st. Det.	224	225	.25	55	4.5	2.5
Oscillator	227-A	55	2.5	—	2.5	2.5
I. F.	235-A	235	2.5	55	2.	2.5
2nd Det.	227-A	110	.5	—	16	2.5
A.V.C.	227-A	12	Nil	—	Nil.	2.5
Power	247	225	22	235	7	2.5
Rect.	280	360-AC	25	—	—	4.8

CANADIAN MARCONI CO.

MODEL 31-SW CONVERTER

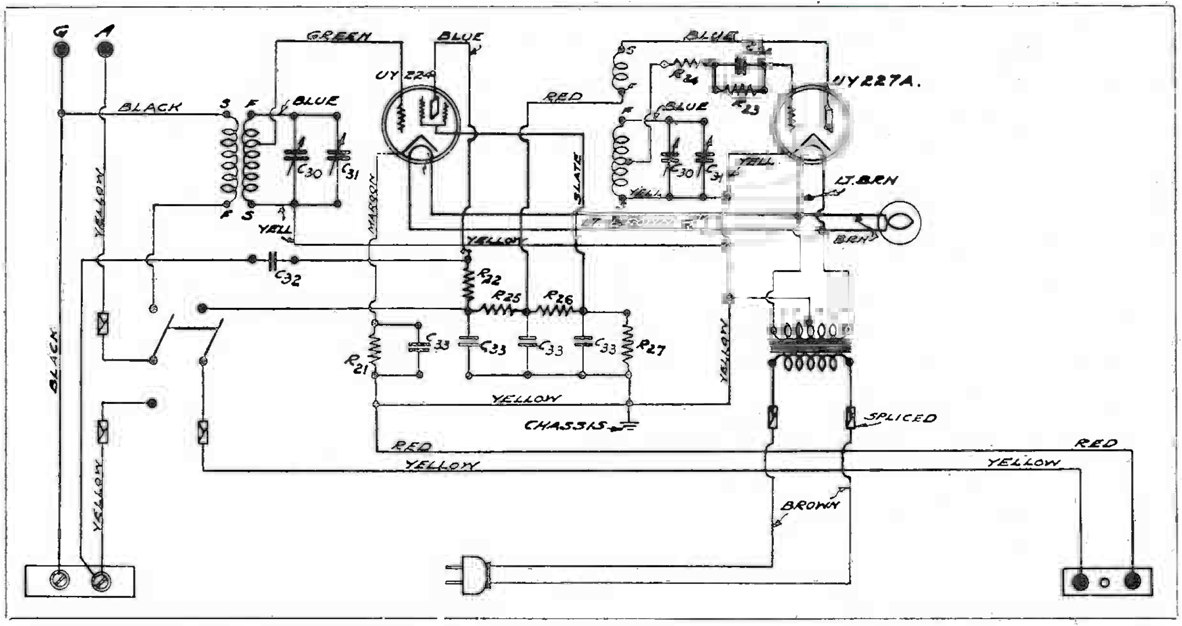

CONDENSERS

Ref.	Part No.	Capacity	Type	List Price
C-30	801	160 Mmf.	2 Gang R.C.C.	**$6.00**
C-31			Trimmer	
C-32	802	.00025 Mf.	Moulded NM 1273	**.50**
C-33	803	.1 Mf.	Tubular 706	**.50**
C-34	804	.0001 Mf.	Moulded NM 1270	**.50**

RESISTORS

Ref.	Part No.	Resistance	Type	List Price
R-21	805	5,000 Ohms	Durham MF 4½—2	**.50**
R-22	806	250,000 "	" "	**.50**
R-23	807	15,000 "	" "	**.50**
R-24	808	75 "	" "	**.50**
R-25	809	15,000 "	" 2 watt	**.75**
R-26	810	6.000 "	" MF 4 —2	**.50**
R-27	810	6,000 "	" "	**.50**

VOLTAGE READINGS

Position	Type	Plate Volts	Plate Current	Screen Volts	Grid Volts	Heater Volts AC.
Det.	UY-224	82	1	32	2.5	2.4
Osc.	UY-227-A	65	5.5	—	0	2.4

CONTINUITY TESTS, MODELS 31 and 31-SW CHASSIS
RESISTANCE TO CHASSIS

Socket	Plate	Screen	Grid	Cathode
R.F.	12000*	8150	1.5 Meg.	150
1st. D.	12000*	8150	0	10,000
Osc.	8150	—	40,000	150
I. F.	12000*	8150	0	150
2nd D.	124000	—	90	30,000
A.V.C.	1.5 meg	—	3 meg	200,000
Pen.	12000*	12000*	200,000§	—
Rect.	2500			24,000

CONVERTER UNIT

Det.	280,000	6,000	0	5,000
Osc.	12,000	—	15,000	0

See that NEG. terminal of ohmmeter is connected to chassis.
*This reading will vary with the voltage of the ohmmeter.
§This reading will vary with position of Volume and Hum controls.

CANADIAN MARCONI CO.

MODEL 32

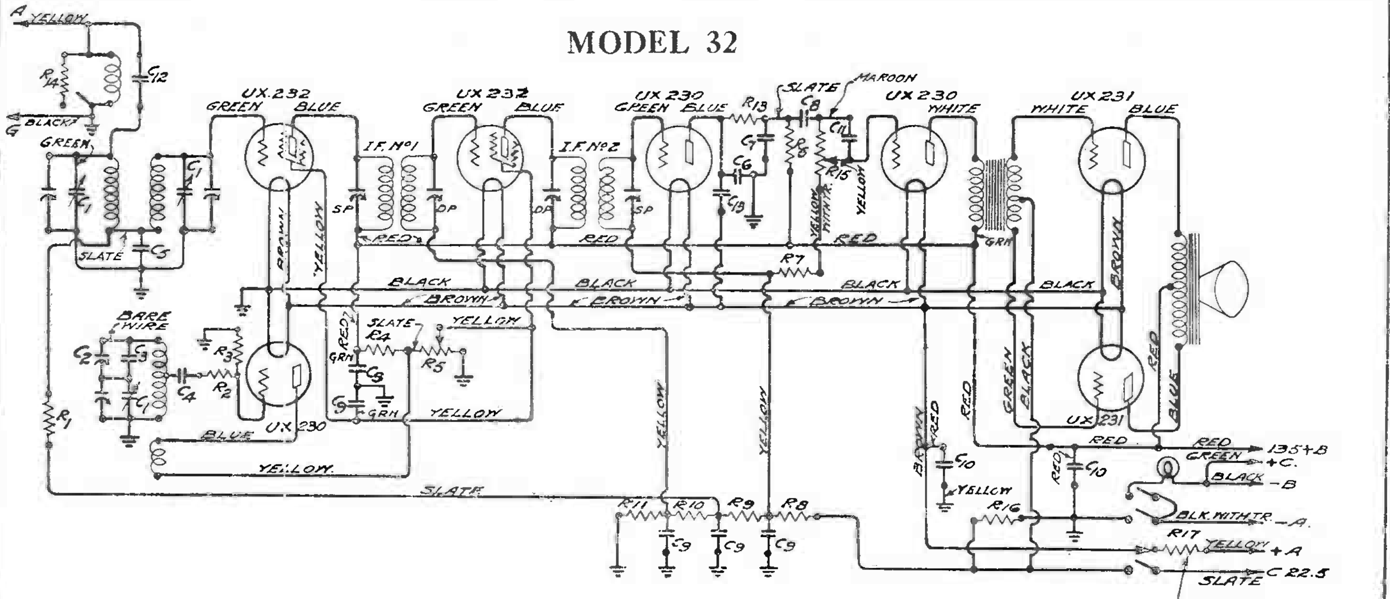

SCHEMATIC CONNECTIONS
RADIO RECEIVER
MARCONI - TYPE 32

CANADIAN MARCONI COMPANY

2217

RESISTORS FOR MODEL 32

Ref.	Part No.	Resistance	Type	List Price
R-1	915	15,000 Ohms	Durham, MF 4½-2	.50
R-2	916	4,000 "	" MF 4½-2	.50
R-3	917	30,000 "	" MF 4½-2	.50
R-4	918	10,000 "	" MF 4½-2	.50
R-5	995	50,000 "	Vol. Control No. 33114	1.50
R-6	919	100,000 "	Durham, MF 4½-2	.50
R-7	919	100,000 "	" MF 4½-2	.50
R-8	918	10,000 "	" MF 4½-2	.50
R-9	920	6,000 "	" MF 4½-2	.50
R-10	921	2,500 "	" MF 4½-2	.50
R-11	922	3,000 "	" MF 4½-2	.50
R-13	915	15,000 "	" MF 4½-2	.50
R-14	923	11.5 "	No. 33 Nichrom	.50
R-15	991	800,000 "	Tone Control No. 33387	1.50
R-16	924	17,000 "	Durham, MF 4½-2	.50
R-17	925	.52 "	External, with lead No. 33814	.80

CONDENSERS FOR MODEL 32

Ref.	Part No.	Capacity	Type	List Price
C-1	901	380 Mmf.	3 Gang	10.00
C-2	902	75 Mmf.	600 K.C. Trimmer No. 29934	.60
C-3	903	850 Mmf.+Or—2%	"Toothpick"	.50
C-4	904	750 Mmf.	"	.50
C-5	905	.01 Mf.	Tubular	.50
C-6	906	.001 Mf.	Moulded SM 1257	.50
C-7	907	.00025 Mf.	" SM 1253	.50
C-8	909	.02 Mf.	" 1460	.50
C-9 C-10	910	5 x .3 Mf. 2 x 1 Mf.	Bypass block No. 33116	3.00
C-11	911	.0005 Mf.	Moulded SM 1256	.50
C-12	912	20 Mmf.+Or—5%	Marconi No. 33828	.75
C-12a	912a	20 Mmf.	Same as No. 912 but not adjusted. No. 30881	.50
C-13	906	.001 Mf.	Moulded SM 1257	.50

VOLTAGE READINGS

Position	Type	Plate Volts	Plate Current	Screen Volts	Grid Volts
1st. Det.	U.X. 232	125	0	65	1.1
Osc.	U.X. 230	64	4	—	0
I.F.	U.X. 232	125	2	65	2.2
2nd. Det.	U.X. 230	65	.15	—	11.
1st. A.F.	U.X. 230	120	.2	—	2.
Power	U.X. 231	109	5.	—	21.

The above readings taken with new "B" and "C" Batteries. Due to the high resistance in some of the circuits, the above readings will vary with different meters.

CANADIAN WESTINGHOUSE CO.

Westinghouse Universal Tube Tester Operating Instructions

Warning Re Power Switch—Those responsible for the operation of the Tube Tester should be CAUTIONED to never leave the Tester with the power switched on. This is to avoid the possibility of anyone not familiar with the Tester, placing a "dud" tube in the testing socket and blowing a fuse.

The Operation of the Westinghouse Tube Tester consists of three individual steps. The first is the Filament Intact and Short Test. This test is made in one of the first three sockets marked, "Short Test UX", "Short Test UY", and "Short Test Pentode".

Each tube must be Short Tested before making the actual operation test. The 230, 232 and 201-C Tubes must be Short Tested with the adapter provided otherwise, due to a building up of Emission Current, they are liable to burn out. With this adapter the filament voltage is greatly reduced and consequently the "Filament Intact" sign will hardly be discernible. All four prong tubes are placed in the "Short Test UX" socket, five prong in the "Short Test UY" socket and Pentode Tubes such as the 233, 238 and 247 in the "Short Test Pentode" socket.

If the tube has a top cap the lead with the top clip "K" must be attached to it.

If the tube passes the Short Test O.K., it is indicated by **only** the words "Filament Intact" appearing on the glass panel "C". Short circuits between elements are indicated on the same panel.

On passing the Short Test the tube is placed in one of the "Preheater" sockets if it is of the cathode type such as 224, 227 or 235, and heated for at least one minute.

Filament type tubes, 247, 245, 280, 112A, etc., do not require preheating but may be placed directly in their own particular socket and a reading taken on one of the two large milliammeters.

Tubes showing a small reading are read on the 0-20 meter "M" while those having a large reading are read on the 0-100 meter "R". These meters are normally protected by shunts to decrease the flow of current until it is seen that it is safe to take accurate readings. If the meter does not read higher than the red line on the scale, push the button immediately below the meter and note the reading. A tube that causes the meter to read higher than the red line is defective and should be immediately removed.

A second reading is taken with the test push button "P" pressed down. This reading is taken on the same meter as the first and again the push button immediately below the meter should be pressed to secure correct reading if pointer does not pass red line. If the difference between the first and second readings is the same as, or greater than the figure given on the card identifying the socket, the tube is O.K., if not, the tube is unsatisfactory and should be rejected.

The following is the actual procedure of testing a UY-224 tube:

1—Plug tester in any 105-125 volt, 25-133 cycle line and throw switch "S" to left.

2—Set voltmeter "V" needle on red line by means of knob "A".

3—Plug 224 tube in socket marked "Short Test UY" and fasten top clip "K".

4—If tube does not show any shorts and the words "Filament Intact" appear, place the tube in socket marked "Preheater".

5—After one minute of heating place tube in socket marked "UY-224" and attach top clip "L".

6—Observe milliammeter "M". If pointer does not read higher than the red line, press the button "Q" and note reading. Let us say it is 5.7. Release button "Q".

7—Press push button "P".

8—Observe milliammeter "M". If the pointer does not read higher than the red line, press the button "O" and note this second reading. Let us say it is 11.9.

9—Difference between two readings is 6.2

10—This is greater than the figure 5.3 marked on card. Therefore tube is O.K.

There are only two exceptions to the above and these are the UX-280 and UX-281 rectifier tubes. When testing the UX-281 only the first reading on the 0-100 milliammeter "R" is taken and it must be the same or greater than the figure on the card.

The UX-280 test consists of reading the plate current in each plate circuit—this is shown on the two small milliammeters marked "N" and "O". Each reading should be the same or higher than the value given on the card. A good tube will show about the same value on each meter but if these values should differ by more than ten milliamperes it is quite likely that the tube may give trouble from hum, etc., and it should be rejected.

Each of the large milliammeters are protected by fuses which are accessible by removing the rear cover. It may happen that some peculiar condition or short will occur which may not show up on the Short Test end and then when this tube is placed in its own socket one of these fuses will blow. A tube of this type should be immediately scrapped and a new fuse of the same capacity as the one removed should be inserted.

Extra fuses are supplied with this Tester and additional fuses may be obtained at very low cost at any time.

ALWAYS REMEMBER:

1. **That a tube which does not pass short test should not be tested further.**
2. **That the Voltmeter Needle must be on the Red Line.**
3. **To place tube carefully in correct socket only.**
4. **Do not press push button "Q" or "T" immediately below large meters if the pointer reads higher than the Red Line on the meter scale.**
5. **Not to test for shorts after preheating unless tube has cooled for five minutes.**
6. **One, Two or Three tubes may be preheated at once, but only one tube may be tested at one time. As soon as tested remove tube from socket.**

ADAPTERS USED WITH CANADIAN WESTINGHOUSE UNIVERSAL TUBE TESTER

(1) Short Test Adapter for 230, 232 and UX-201C. Standard equipment of tube tester. Style number H-25508.

(2) UV-201A Base to UX Socket. Naald Cat. 967. List Price (U.S.) $1.00. Order from Alden Mfg. Co., Brockton, Mass.

(3) WD-11 Base to UX-Socket. Naald Cat. 968. List Price (U.S.) $1.25. Order from Alden Mfg. Co., Brockton, Mass.

(4) UV-199 Base to UX Socket. Naald Cat. 429. List Price (U.S.) $0.75. Order from Alden Mfg. Co., Brockton, Mass.

(5) Rogers or Cardon (Sparton) Adapter. Obtain from Canadian Westinghouse Co. Service Dept. (nearest branch) S. No. H-25510 net price $2.00 To use—place tube in adapter, connect clip leads to heater terminals of tube and insert adapter in socket.

(6) Raytheon Adapter, obtain from Canadian Westinghouse Co. Service Dept. S. No. H-25521. Net Price $2.00. Note—when this adapter is received use it to test a good Raytheon tube and note meter reading. Then remove the cap of the adapter and move the large contact prong over to the hole in the adapter now occupied only by a small screw. Place screw in former position of large prong. Test the same tube again and leave the large prong in the position in the adapter which gives most nearly equal readings of the two small meters. This is to compensate for variations in tube testers.

(7) Northern (Western) Electric Type 215-A Tube (Peanut) adapter. Naald Cat. 972. List Price (U.S.A.) $1.25 Order from Alden Mfg. Co.

LIST OF OTHER MANUFACTURERS TUBES WHICH MAY BE REPLACED BY WESTINGHOUSE RADIOTRONS

C-484 or C-485—Replace with UY-227. Use enough UY-227 Radiotrons in set to drop heater voltage on UY-227 tubes to 2.5 volts approx.

C-585—Replace with UX-250.

C-182 or C-182B—Replace with UX-171A. If there are two tubes in the receiver replace both at the same time.

551—Replace with 235.

CANADIAN WESTINGHOUSE CO.

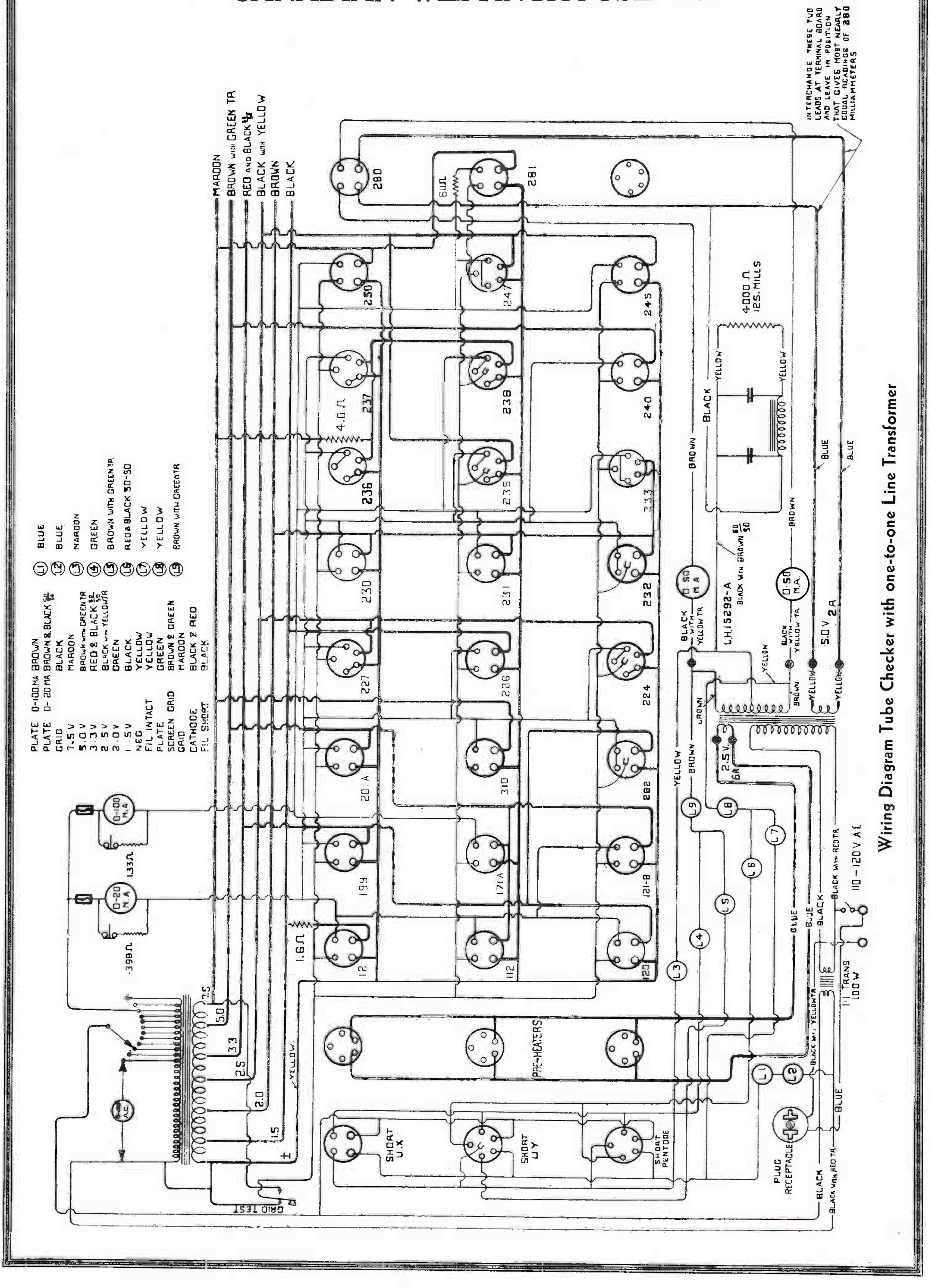

Wiring Diagram Tube Checker with one-to-one Line Transformer

CANADIAN WESTINGHOUSE CO.

RADIO SERVICE OSCILLATOR

Style No. H25405

(1) —THEORETICAL CIRCUIT.

The circuit diagram is shown in Figure 2. It will be seen that the transformer (T) has two secondary windings. One secondary supplies the filament current to the oscillator radiotron No. 1. The other secondary supplies the filament current to radiotrons No. 1 and No. 2 which are used as half wave rectifiers. This filament heating transformer is also centre-tapped to provide a third connection necessary for the rectifier circuit. It will be seen that the rectifier circuit is as follows:

When the upper end of the line transformer is on the positive half of the applied alternating voltage current will flow through rectifier radiotron No. 2 from plate to filament, and will flow through the plate circuit of the oscillator radiotron No. 1, returning through the grid bias resistor (R1) to the centre tap of the line transformer. On the other half of the alternating voltage wave the action is the same but the rectifier radiotron No. 3 passes current through the oscillator radiotron plate circuit instead of radiotron No. 2.

The oscillator plate current flowing through the resistor (R1) creates a voltage drop across this resistance. As the grid of the oscillator radiotron is connected through the oscillator coil to the negative end of the resistance (R1) and the filament of the oscillator radiotron is connected to the positive end of this resistor, a negative grid bias is applied to the oscillator radiotron.

The condenser C3 is a filter condenser, which is connected to the centre tap of the line transformer and to the filaments of the rectifier radiotrons. This filter condenser, therefore is, connected across the output of the rectifier circuit and will serve to smooth out the ripple in the rectified current. If this condenser were large enough the plate voltage on the oscillator radiotron would be a constant direct voltage. However C3, is made considerably smaller than required to give direct voltage and only partially smooths out the ripple in the rectified output. Enough ripple is left in the oscillator plate voltage that this voltage may vary from 30% higher than the average oscillator plate voltage to 30% lower. This is the condition required to give 30% modulation of the oscillator output. Due to the fact that a full wave rectifier circuit is used there will be two peaks to the oscillator plate voltage each cycle of the alternating current supply. Thus, if the power supply to the oscillator is 60 cycles the modulation frequency will be 120 cycles, and of course various harmonics of 120 cycles will also appear.

The oscillator circuit itself is of the conventional inductive feed-back type. A pick-up winding with one connection is wound on the same tube with the oscillator coil winding. This pick-up winding is used with a coupling loop or clip lead to transfer the output of the oscillator to the radio set to be adjusted.

The oscillator is completely shielded and radio frequency filters are located on the A.C. supply line to prevent stray radio frequency energy being radiated by the oscillator. These R.F. filters consist of two 1000 ohm carbon resistors, placed one in series with each A.C. supply lead just where they enter the oscillator assembly. Across the primary of the line transformer, are two .1 mfd. condensers with the centre tap connected to the metal frame.

Additional R.F. filtering for the A.C. supply line is secured by using a small Tobe-Deutchmann Filterette or Dubilier line filter of similar construction. When the Filterette is used, the oscillator line plug should be placed into the Filterette and the third wire of the oscillator line cord should be connected to the binding post on the Filterette. This additional filtering is only essential when it is desired to secure a very weak signal from the oscillator, as in the case of adjusting a very sensitive receiver which has incorporated an automatic volume control. These Filterettes are supplied as standard equipment.

The oscillator may be used with the coupling lead clipped on to some point of the radio receiver, or it may be inductively coupled to the radio receiver dummy antenna by means of the loop on the coupling lead. The attenuator to which the coupling lead is fastened consists only of a bakelite rod with a wire through the centre. This bakelite rod is pushed in or out of a brass tube, which is connected to the coupling winding on the oscillator coil. The brass tube and wire in the bakelite rod form a very small condenser which may be used to control the output of the oscillator over a very wide range. When the bakelite rod is inserted all the way in the brass tube a direct connection is made between the brass tube and the coupling lead, giving a very strong signal which may be used for neutralizing.

(2)—ELECTRICAL CONSTRUCTION.

The filament heating transformer used is a standard push-pull output choke coil with two additional windings wound on top of the standard coil to secure 1.8 volts, .06 amperes, for the filament of the oscillator radiotron, and 3.2 volts, .06 amperes to light the filaments of the two rectifier radiotrons which are connected in series for convenience. The details of the filament heating transformer are as follows:

CANADIAN WESTINGHOUSE CO.

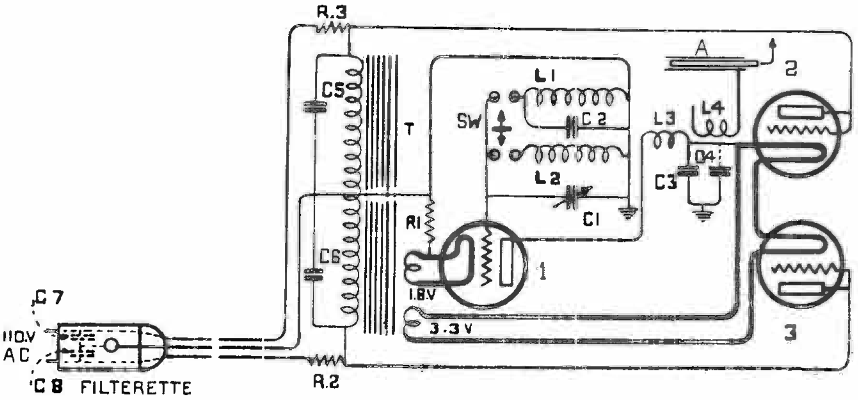

Fig. 2. Schematic Diagram

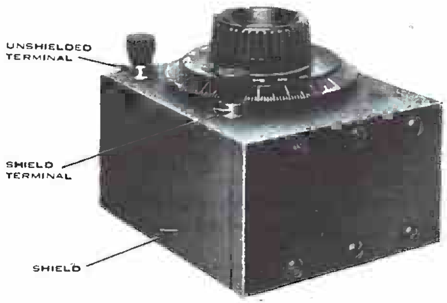

Fig. 3. Single Shielded Variable Condenser

Radio Service Oscillator

STYLE No. H-25405

Key to Circuit Diagram

R1—Grid Bias Resistor. 3000 ohms.
R2 and R3—Line Filter Resistor, 1000 ohms.
L1—I.F. Winding of Oscillator Coil.
L2—R.F. Winding of Oscillator Coil.
L3—Feed-back Winding of Oscillator Coil.
L4—Pick-up Winding of Oscillator Coil.
C1—Variable Condenser .00035 Mfd.
C2—I.F. Shunt Condenser Fixed 100 Mmf.
C3—Filter Condenser (60 cycle) 0.1 Mfd.
C4—Extra Filter Condenser (25 cycle only) 0.1 Mfd.
C5 and C6—Line Filter Condensers 0.1 Mfd.
C7 and C8—Filterette Condensers.
T—Line Transformers.
SW—S.P.S.T. I.F.-R.F. Switch
A.—Attenuator—Brass Sleeve, Bakelite Plunger and Coupling Lead.
Radiotron No. 1 Oscillator—Westinghouse 230.
Radiotrons Nos. 2 and 3 Rectifiers—Westinghouse 230's

The primary consists of 8000 turns of No. 40 enamelled copper wire. The 3.2 volt secondary consists of 335 turns of No. 29 enamelled copper wire. The 1.8 volt secondary consists of 201 turns of No. 29 enamelled copper wire. Standard silicon steel audio transformer punchings are used to give a core area of about ¼ of 1 square inch cross section.

The radiotrons used are all of the 230 type. This tube is used on account of its extreme ruggedness, its low filament consumption and its ability to operate on widely varying voltages. The radiotron 230 in the oscillator circuit used will operate with a filament voltage anywhere from 1.5 to 2.2 V and still give satisfactory service and life. One radiotron is used as an oscillator, the other two are used as rectifiers by connecting the grid and plate of each tube together.

The value of the fixed filter condenser, C3, is .1 mfd. When the oscillator is going to be used mainly on 25 cycle the condenser C4, which is another .1 mfd. condenser, is connected across condenser C3 to increase its capacity to .2 mfd. The value of the condenser used at this point in the circuit is not critical, as whether the extra condenser C4 is connected in the circuit or not, the service oscillator may be operated from either 25 or 60 cycle, the only difference being that the percentage modulation will not be the same.

With the oscillator removed from the box and the metal shield removed from the top of the oscillator it will be noted that there are two by-pass condensers located beside the tuning condenser, and oscillator coil. One of these by-pass condensers has its two terminals connected to the two sides of the primary of the line transformer. Its third connection is its frame, which is connected to the shield. The other by-pass condenser is of the same type, but on 60 cycle only one terminal is connected. On 25 cycle both terminals are connected together. This is the only difference between the 25 and 60 cycle oscillators.

Both the R.F. and I.F. oscillator frequencies are controlled by the same 4″ bakelite dial. The R.F. range is from 1500 kilocycles to 550 kilocycles. The I.F. range is approximately 130 to 220 kilocycles. The oscillator coil is of special construction, using the same "tickler" or "feed-back" coil for both the I.F. and R.F. circuits. Similarly a common output or coupling coil is used. The complete coil is mounted in an aluminum shield.

(3)—MECHANICAL CONSTRUCTION

Figure No. 6 shows the general mechanical details of the oscillator. All of the parts are assembled on a sheet metal frame with all wiring and small parts on the upper side of this frame. This frame is secured to a metal panel. This complete assembly is supported in the container by two pivots and the wooden cover. To remove the assembly in order to replace a radiotron, it is merely necessary to open the lid and the whole assembly will pivot from the front around the two pivot screws and when in an upright position the assembly may be removed entirely from the metal container.

CANADIAN WESTINGHOUSE CO.

All metal parts available from the outside without removing the top cover, which is screwed down, are insulated from the oscillator proper, consequently there is absolutely no danger of receiving even a slight electrical shock while operating the oscillator.

Use of Radio Service Oscillator

(1)—ADDITIONAL EQUIPMENT REQUIRED.

For performing the various adjustments described hereafter, the following additional pieces of equipment will be required.

(a) **Dummy Antenna.** The purpose of the dummy antenna is to simulate the electrical characteristics of the average broadcast receiver antenna. That is, the dummy antenna should possess inductance, capacity and resistance, the same as an ordinary antenna but should have no pickup ability. By means of this dummy antenna the desired signal from the local oscillator may be fed into the radio receiver and extraneous signals from local broadcasting stations or electrical interference eliminated during the period of the test. The electrical characteristics of such a dummy antenna should be 25 microhenries inductance, 25 ohms resistance and 200 micro-microfarads capacity.

A simple dummy antenna of convenient design is illustrated in Figure No. 8. The dummy antenna shown is wound with resistance wire on a micarta tube, the winding serving both as a resistance and an inductance. If resistance wire is not available to wind the coil, it may be wound with the same size copper wire and a resistor added in series. This resistor should be non-inductive, and may be mounted inside the micarta tube. One-half of a standard 60 ohm filament centre-tapped resistor is quite satisfactory. A dummy antenna of this type is supplied with each oscillator.

(b) **Coupling Lead.** When it is desired to feed a signal of varying strength from the oscillator into the radio set, a coupling lead should be used. This coupling lead should consist of approximately 4 ft. of flexible insulated wire with a blind coil of three or four turns on the end. This blind coil should be formed by making a loop of three or four turns of the same insulated wire, leaving the actual end of the wire unconnected. This loop should be about 2½" in diameter and should be held in shape by means of tape or string and covered with shellac.

(c) **Clip Lead** When it is desired to feed a very strong signal from the oscillator into some portion of the radio set under test a clip lead should be used. This lead consists of approximately thirty inches of flexible insulated wire, having a Pee-Wee clip on the end.

For convenience the coupling lead and the clip lead may be combined in one as is done in the case of the leads supplied with Radio Service Oscillator, S. No. 25405.

(d) **Neutralizing Screw Driver.** Except where the screws of the adjustable trimming, neutralizing, compensating condensers, etc., are at ground potential, (these screws are at ground potential when they make a metallic contact to the metal frame of the radio set), a special neutralizing screw driver is required. On most Westinghouse sets standard slot-headed screws are used in the adjustable condensers. The screw driver illustrated in Figure 10 is therefore the type that is required. In a few Westinghouse sets a special hexagon head unslotted screw is used in the adjustable condensers. In this case a special bakelite or fibre hexagon socket wrench should be used.

(e) **Output Meters.** Any of the standard forms of output meters may be used with Radio Service Oscillator S No. H-25405. It is more convenient however as a rule for the service man to use the ordinary A.C. voltmeter that is included in most set testers. In receiving sets using dynamic speakers having output transformers with a step down ratio of approximately 20 to 1, the 4 volt scale of the meter in common use serves excellently as an output meter when connected across the terminals of the loud speaker cone coil. The lead from the cone coil terminals to the cone coil may be left connected or disconnected, as desired. In other radio sets not having step down transformers of ratio approximately 20 to 1, the ten or fifteen volt scale of the A.C. voltmeter in common use may be used. In this case the connection should be made across the loud speaker input terminals or across the primary of the output transformer of the radio set under test and a very weak signal used.

(f) **Balancing Ring.** In lining up the gang condensers of most radio frequency sets, it is useful to have a balancing ring of the type illustrated in Figure 9. The purpose of the balacing ring is as follows:

If the balancing ring is placed so that the ring is around one of the radio frequency coils, or the ring is flat against the end of the coil, it will act as a short circuited turn and decrease the inducatance of the coil. By using the ring in this way, as described further on, a check may be made to see whether one of the gang condenser sections needs to be decreased in capacity.

(g) **Dummy Radiotron.** For neutralizing purposes a dummy radiotron will be required. This consists of a standard radiotron of the type normally used in the radio set being neutralized, but having one filament or heater prong cut off. A burnt-out or shorted radiotron should not be used for this purpose.

CANADIAN WESTINGHOUSE CO.

(h) **Shielded Single Variable Condenser.** For proper adjustment of the gang condensers and trimming condensers of superheterodynes, an external variable condenser is required. This condenser should be fairly well shielded, it should have a low minimum capacity and a maximum capacity of 350 mmf. In use it is connected by means of two flexible leads about 12" long in the circuit of the radio set being adjusted to replace the oscillator gang condenser, to make the tuning of the gang condenser independent of the tuning of the local oscillator in the superheterodyne. A typical condenser is illustrated in Figure. 3.

(2)—I.F. CALIBRATION OF OSCILLATOR S. NO. H-25405.

In making adjustments to superheterodyne receivers it is essential that the frequency of the service oscillator be accurately known. Even with the best of material and construction, oscillators will shift their frequency and a periodic check is both desirable and necessary.

The I.F. range of radio service oscillator, S. No. H25405, is approximately 130 kilocycles to 220 kilocycles. For the range from 168 to 182 kilocycles, a separate adjustable dial indicator is provided on the service oscillator. This indicator is shown in Figure 7.

To adjust this indicator in calibrating the I.F. range of the oscillator, it is merely necessary to slacken the retaining screw, move the bakelite strip on which the indicator line is marked and while holding it in the desired position, tighten the retaining screw. The oscillator is so designed that when the adjustable indicator is in the correct position the figure 70 on the dial corresponds to a setting of 170 kilocycles; the figure 71, 171 kilocycles, etc. This applies accurately over the range from 168 to 182 kilocycles.

To check the calibration of the I.F. range of the service oscillator, it is merely necessary to check its fourth harmonic against a station operating at that harmonic frequency. To do this, tune in broadcasting station WLW operating at 700 K.C. on any radio receiver. The station should be tuned in accurately. Then with the service oscillator switch in the I.F. position, and the oscillator coupled sufficiently to the receiver antenna to be heard, tune the service oscillator to a position around 75 (175 K.C.) until the point is located where the oscillator note is heard coming in along with the WLW program. As the oscillator is tuned towards this point a high pitched heterodyne whistle or beat note will be heard. Continuing the adjustment this beat note becomes lower pitched and practically inaudible. Continuing the adjustment still further the beat note rises in pitch until it again becomes inaudible. At the centre point where the beat note is of lowest pitch, leave the service oscillator dial set and adjust the movable dial indicator until the white line corresponds exactly with the number 75 on the service oscillator dial. At this point the fourth harmonic of the service oscillator is at the same frequency as the station WLW. The fundamental service oscillator frequency is therefore one-fourth of the station frequency or 175 K.C. This is a sufficient check on the I.F. range of the service oscillator from 168 to 182 kilocycles.

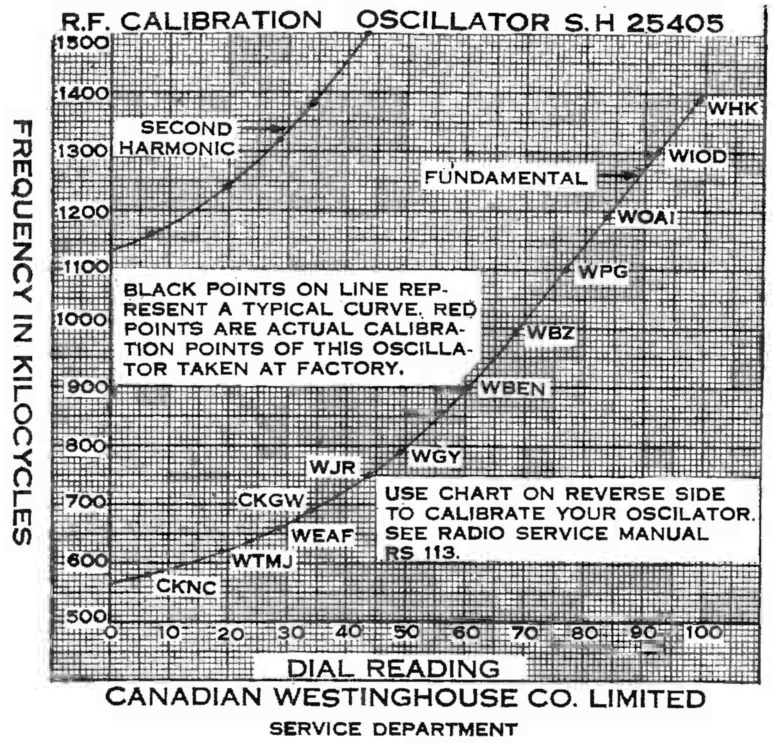

Fig. 4. Oscillator R.F. Calibration Curve (copied from card enclosed with each oscillator)

CANADIAN WESTINGHOUSE CO.

If station WLW is out of range of the service man's locality, any of the following broadcast stations may be used, but instead of using the point 75 on the service oscillator dial, the following points should be used in calibrating.

KFEQ, KPO, or WPTF on 680 K.C., set indicator at 70 on dial.

CFAC, or CKGW on 690 K.C. set indicator at 72.5 on dial.

KMPC or WOR on 710 K.C., set indicator at 77.5 on dial.

WGN or WLIB on 720 K.C., set indicator at 80 on dial.

(3)—R.F. CALIBRATION OF OSCILLATORS STYLE NO. H-25405.

The R.F. oscillator may be calibrated in the same manner as the I.F. oscillator with the exception that its fundamental frequency should beat against numerous broadcasting stations and a curve be plotted so that all frequencies will be known. Such a curve is shown in Figure 4. A step by step procedure for making such a calibration follows:

1. Tune in a station with the receiver at the high frequency end of the scale.

2. Place the oscillator to be calibrated in operation and couple it to the antenna system of the receiver.

3. Adjust the dial of the oscillator until its signal is heard at maximum intensity in the receiver or zero beat is obtained with the broadcasting station. Note the reading of this position on the oscillator dial and plot this position on the chart shown in Figure 5. The vertical divisions represent frequency and the horizontal divisions, the oscillator scale readings.

4. Now repeat this procedure at a station slightly lower in frequency and plot this point on the chart.

5. As many stations as possible, tuned in at various positions throughout the dial scale, should be checked by this method, and after all points have been located on the chart, the points should be connected by means of a line. This line will represent the calibration of the oscillator.

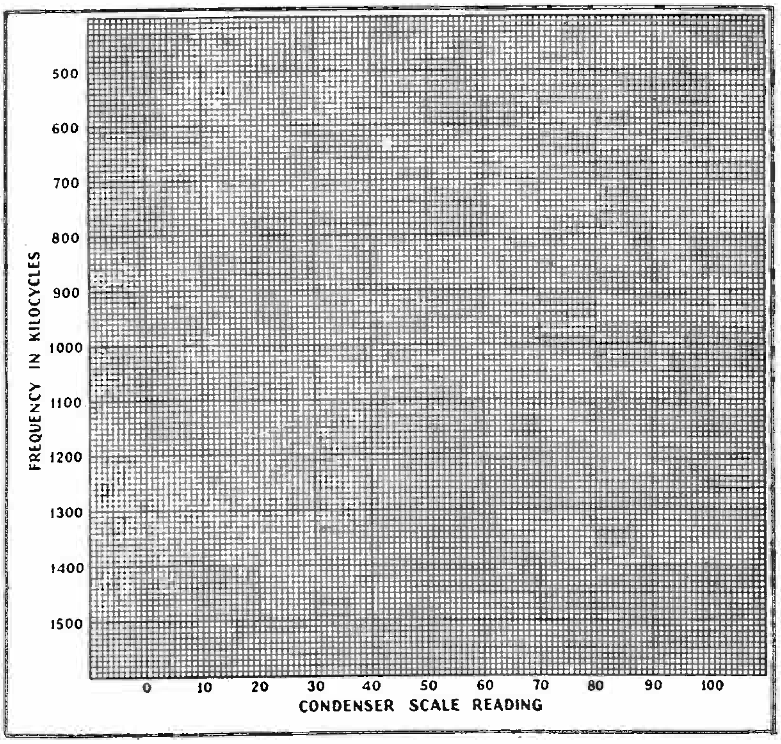

Fig. 5. Chart for Plotting R.F. Oscillator Calibration Curve

(4)—ADJUSTMENTS TO RADIO FREQUENCY RECEIVERS.

Radio Service Oscillator S. No. H-25405 may be used to make the following adjustments to radio frequency receivers—R.F. line-up or trimming condensers, gang tuning condensers, dial scale calibration, compensating condensers and neutralizing condensers. Not all radio frequency receivers require all of the above adjustments. In this respect radio frequency receivers may be divided into the following classifications:

CANADIAN WESTINGHOUSE CO.

(a) Receivers which have gang tuning condensers, R.F. line-up condensers, no compensating or neutralizing condensers and no calibration or only approximate calibration of the selector dial. Some typical receivers in this class are the Radiola 16, Radiola 17, Radiola 44, Radiola 46, Radiola 47, Radiola 21, Radiola 22, Westinghouse Model 6 tube A.C. 1927-28, Westinghouse Model 16, Westinghouse Model 70, Westinghouse Model 71, Westinghouse Model 61, Westinghouse Model 81 and Westinghouse Model 80.

The following are the complete adjustments to line up a receiver in classification (a):

Line up gang condenser and R.F. line-up condensers as given in Part II, Section 7. If the receiver breaks into oscillation at any point on the dial and this oscillation cannot be traced to any other cause, such as an open by-pass condenser, or defective radiotrons, the gang condensers should be put sufficiently out of balance at that point of the dial to be non-oscillating, but not sufficiently so as to decrease the sensitivity appreciably.

It should be noted that with many receivers in this classification, oscillation may be caused by dirt or oxidation on the spring wiping contacts of the gang condenser. This is particularly true of sets that have been out of service for some time. As a rule it may be cleared up by rotating the selector dial back and forth completely a number of times or sand-papering the contacts. Another cause of oscillation of receivers in this classification is the position of the flexible leads to the control grids. Oscillation may in many cases be cured by re-adjusting the positions of these leads.

Where the dial scale is approximately calibrated, the scale may be moved in its mounting to be in its most nearly correct position, after the gang condenser has been lined up.

(b) Receivers which have gang tuning condensers, R.F. line-up condensers, compensating condensers and no calibration or only approximate calibration of the selector dial:

Some typical receivers in this class are the Radiola 18, Radiola 33, Westinghouse 6-tube A.C., 1928-29 Model, the Westinghouse 6-tube battery operated, 1928-29 Model, and the Westinghouse Model 69. The following are the complete adjustments to line up a receiver in this classification:

If the receiver is in an oscillating or insensitive condition, adjust the compensating condensers, as given in Part II, Section 5. The gang condensers and R.F. line-up condensers, then should be adjusted as given in Part II, Section 7. If oscillation occurs again during the lining up process, the compensators should again be adjusted and the lining up continued. If the dial scale is approximately calibrated, the scale may then be moved on its mounting to be in its most nearly correct position.

(c) Receivers which have gang tuning condensers, R.F. line-up condensers, neutralizing condensers and no calibration or only approximate calibration of the selector dial. Some typical receivers in this class are the Radiola 20, the Westinghouse Model 55, Westinghouse Model 55-A, Westinghouse Model 56, Westinghouse Model 57 and the Westinghouse Model 58.

The following are the complete adjustments to line up a receiver in classification (c). If the receiver is in an oscillating condition, adjust the neutralizing condensers as given in Part II, Section 6, then line up the gang condensers and R.F. line-up condensers as given in Part II, Section 7. If the receiver breaks into oscillation at any point of this procedure, correct this oscillation condition by a fresh adjustment of the neutralizing condensers as before. The last adjustment must always be on the gang condensers and R.F. line-up condensers.

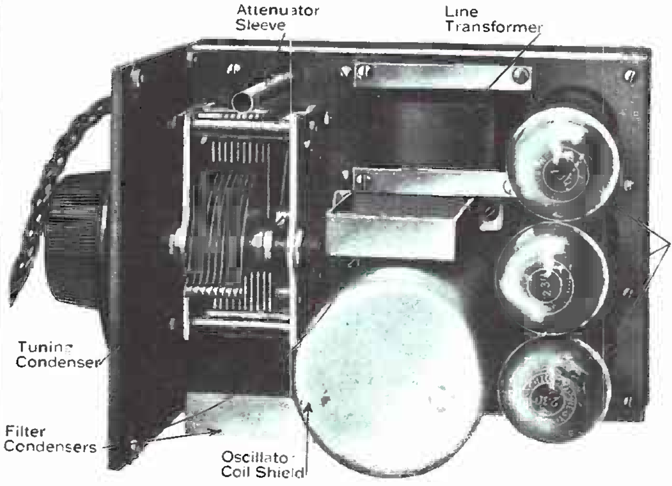

Fig. 6. Interior View of Oscillator

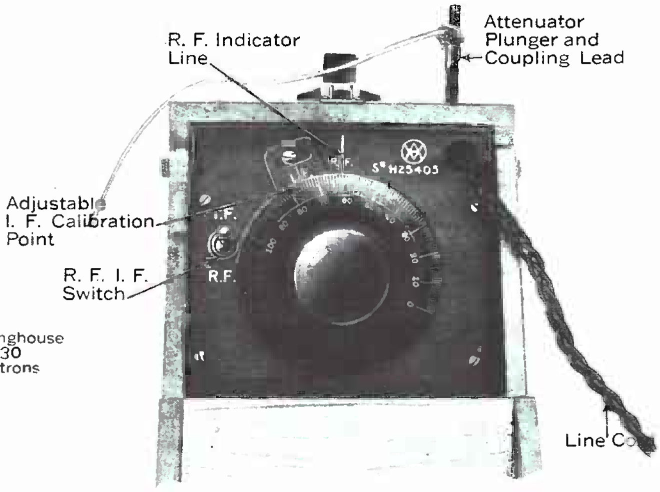

Fig. 7. Oscillator Ready for Use

CANADIAN WESTINGHOUSE CO.

In the case of all the typical receivers mentioned above as being in classification (c) it should be noted that the R.F. line-up condensers are controlled by knobs on the front panel of the receivers and are adjusted each time a station is tuned in. Thus in lining up the gang condensers it is only necessary to see that the condensers are sufficiently aligned that the trimming condensers do not tune off scale on any station in the broadcast range.

(d) Receivers which have gang tuning condensers, R.F. line-up condensers, no compensating or neutralizing condensers and accurate calibration of the selector dial. Some typical receivers in this class are: the Radiola 48, the Westinghouse Radio WR-4, and the Radiola 42.

The following adjustments are necessary to line up a receiver in classification (d). Line up gang condensers and R.F. line-up condensers at the correct calibration points as given in Part II, Section 8. If the receiver breaks into oscillation at any point on the dial and this oscillation cannot be traced, to any other cause such as an open by-pass condenser or defective radiotron, the gang condensers should be put sufficiently out of balance at that point of the dial to be non-oscillating, but not sufficiently out of balance so as to decrease the sensitivity appreciably.

(5) ADJUSTING COMPENSATING CONDENSERS.

In some Westinghouse radio sets compensating condensers are used to provide a fixed amount of re-generation or feed-back to increase the sensitivity of the receiver. In order to adjust compensating condensers, it is necessary to increase the capacity to the largest amount possible without going past the critical point where oscillation sets in. A step by step procedure is as follows:

(a) Place the radio set and the service oscillator in operating condition. This arrangement is illustrated in Figure No. 11 (though it is not necessary to use an output meter for this adjustment).

(b) Set the RF.—IF switch of the service oscillator to the RF. position and the tuning dial to 1500 KC. position.

(c) With the volume control on the radio set set at maximums position, tune in the service oscillator signal, and adjust the service oscillator so that a comparatively weak signal is heard in the loud speaker.

(d) Tighten the adjusting screw of the compensating condenser. As this is done the sound in the loud speaker will increase until a point is reached where a sudden "plop" is heard and the set goes into oscillation and becomes either dead or squeals. The compensation condenser should then be turned back approximately ¼ of a turn from the point where oscillation sets in.

(e) If more than one compensating condenser is incorporated in the set, they should all be adjusted in the same manner. As a rule it makes no difference which compensating condenser is adjusted first.

(f) After this adjustment the radio set should be operated over the full range of frequencies with the volume control set at maximum position to see if oscillation occurs at any other point on the dial. If oscillation occurs at any point, the compensating condenser or condensers should be turned back until oscillation ceases.

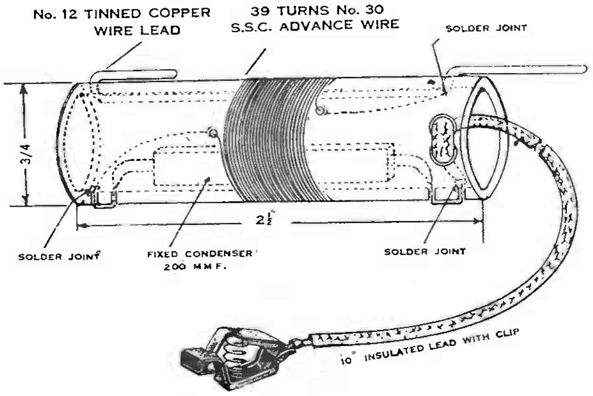

Fig. 8. Dummy Antenna

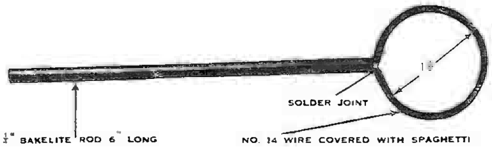

Fig. 9. Balancing Ring

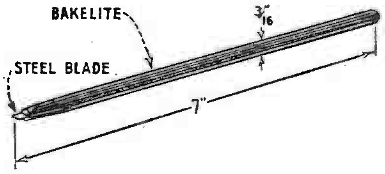

Fig. 10. Dimensions of Non-metallic Screw Driver

(6) ADJUSTMENT OF NEUTRALIZING CONDENSERS (R.F. Sets).

The purpose of neutralizing a radio frequency or intermediate frequency amplifier stage is to create a balanced condition between the coils and condensers of the stage and prevent the stage from oscillating.

The following is the procedure for adjusting the neutralizing condensers on a stage of radio frequency amplification.

(a) Place the radio set in operation and tune in a very strong station or signal from service oscillator at around 1400 K.C.

(b) Remove the radiotron from the stage to be neutralized and insert in its place the dummy radiotron.

CANADIAN WESTINGHOUSE CO.

(c) Disconnect the loud speaker and connect a pair of head phones to the output of the receiver.

(d) Adjust the neutralizing condenser associated with the particular stage under test until the sound in the head phones reaches a zero or minimum point. This stage is now correctly neutralized and if the dummy radiotron is removed leaving the socket empty, the sound in the phones should be considerably increased. This serves as a check on the neutralizing procedure.

If more than one stage of radio frequency amplification requires to be neutralized, the same procedure should be followed on each stage, starting with the first stage.

(7) ALIGNMENT OF GANG TUNING CONDENSERS (R.F. Sets).

In testing the electrical alignment of gang tuning condensers it is in general necessary to have means for causing the following conditions:

(a) A decrease in the capacity of the gang condenser section being checked.

(b) An increase in the capacity of the gang condenser section being checked.

(c) A decrease in the inductance of the tuning coil associated with the gang condenser section being checked.

The capacity of any gang condenser section may be increased at any dial setting by pressing the outside condenser plates together to decrease the distance between the outside stator and rotor plates. This squeezing may be performed by means of a gentle pressure with the insulated end of a neutralizing screw driver in which case the change in capacity is only temperary unless heavy pressure is applied. This method of increasing the capacity may be applied at any point over the tuning range of the gang condensers, but will not have much effect at the higher frequency setting when the gang condenser plates are almost entirely out of mesh. Similarly by spreading the outer plates the capacity may be decreased at any setting. It is customary with most radio sets to have a small trimming condenser that forms a part of each gang condenser section for alignment at the high frequency end of the scale. This trimming condenser is variable by means of an adjusting screw; turning the screw one way increasing the capacity and turning the other way decreasing the capacity. The inductance of any tuning coil may be decreased by placing the balance ring flat against the end of the coil.

In some radio sets it is important that the gang condenser sections be all aligned over the entire range of the receiver. In other radio sets the alignment of the gang condenser is only critical at the higher frequency setting.

A step by step procedure to align a gang condenser follows:

(a) Place the receiver in operation and feed into it a weak signal from the service oscillator using dummy antenna, coupling lead and output meter as illustrated in Figure No. 11.

(b) Using a signal at the high frequency end of the receiver range tune the receiver to the service oscillator and adjust the strength of the signal until a convenient reading is obtained on the output meter. This should usually be about the centre of the meter scale.

(c) Temporarily increase the capacity of each gang condenser section in turn.

(d) Temporarily decrease the inductance of the coil associated with each section of the gang condenser in turn (or decrease the capacity of each gang condenser section in turn).

(e) If increasing the capacity temporarily on any gang condenser section causes the meter needle to swing upwards the capacity of that particular gang condenser section at that particular dial setting should be increased permanently. This should be done carefully so as not to short-circuit the gang condenser plates.

(f) If decreasing the inductance of any coil associated with any of the gang condenser sections causes the meter needle to swing upwards one of the outer plates of the gang condenser section associated with this coil should be spread outwards to decrease the capacity of that condenser at that particular point on the dial.

(g) Adjust the service oscillator to successively lower frequency points over the range of the receiver and tune in a comparatively weak signal.

(h) Adjust each gang condenser capacity in turn to give maximum reading on the ouput meter.

(i) Check previous adjustments at high and low points and if lack of sensitivity or selectivity is experienced at any intermediate point on the dial, repeat the same procedure at that point of the dial as carried out at the low frequency end of the dial, tuning the service oscillator to suit.

(8) CALIBRATION OF GANG TUNING CONDENSERS (R.F. Sets).

In adjusting the calibration of the station selector, of a radio receiver, designed to be accurately calibrated, proceed as follows:

(a) Place the receiver in operation and feed into it a weak signal from the oscillator, using dummy antenna, coupling leads and output meter as illustrated in Figure 11.

(b) Set the oscillator at 1500 kilocycles and tune the receiver to the oscillator. Note whether the receiver dial reads higher or lower than the service oscillator and also the distance the receiver is off calibration at this point. Repeat this procedure at four or five other settings between 1500 and 550 kilocycles, noting whether the scale is off calibration by the same distance at all points. If the dial

CANADIAN WESTINGHOUSE CO.

scale is off calibration by a constant distance at all points, adjust the dial scale on its mounting, the pilot lamp on its bracket, or the position of the dial pointer to correct this. If the receiver dial at all positions reads higher than it should, adjust the position of the dial scale, pilot lamp or dial scale indicator so that the dial scale is in its most nearly correct position. Similarly if the dial reads lower than the service oscillator at all positions on the dial, adjust the receiver dial, pilot lamp or dial indicator to place the dial in its most nearly correct position.

(c) If after the following adjustments it is necessary to align the gang condensers, or the dial scale is off calibration, by more than the permissible amount, continue the adjustment as follows:

(d) Adjust the R.F. line-up and gang tuning condensers as in Section 7 above, at a number of points over the broadcast range, except that the station selector of the receiver, instead of being tuned in each case to pick up the service oscillator signal, should be set at the same kilocycle point on the receiver dial as the frequency to which the radio service oscillator is tuned. It may not be practicable to have the calibration of the selector dial exact at all points. In general it will be satisfactory if the dial readings are correct within ten kilocycles at the various points.

As a rule it will be necessary to remove the receiver unit from the cabinet to make this adjustment. In many sets the selector dial indicator is secured to the cabinet. In this case it will be necessary to use, in this adjustment, a temporary dial indicator so placed as indicate the same readings of the selector dial when the receiver unit is out of the cabinet as the regular selector dial indicator does when the receiver is in the cabinet.

If the end plates of the gang condenser section are not slotted, it is unimportant as to what points on the receiver dial are used in calibrating, except that the adjustment to the R.F. line-up condensers should be carried out at approximately 1500 kilocycles and the other frequencies used should be separated approximately evenly over the selector dial. If the end plates of the gang condenser sections are divided into vanes by a number of slots, it is important to use as calibration frequency first 1500 kilocycles for the adjustment of the R.F. line-up condensers; second that frequency where the first set of vanes are totally in mesh with the stationary plates of the gang condenser; third, that frequency at which the first and second sets of vanes are in mesh; fourth, that frequency at which the first, second and third sets of vanes are in mesh, etc.

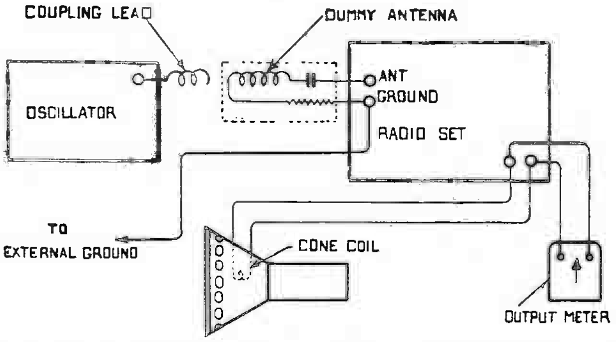

Fig. 11. Hook-up of Service Oscillator, Dummy Antenna, Output Meter and Radio Receiver

(9) ADJUSTMENTS TO SUPERHETERODYNE RECEIVERS.

Superheterodyne receivers have a greater number of circuits that may require adjustment with the aid of Radio Service Oscillators S. No. H-25405 than ordinary R.F. sets. These adjustments are as follows:

Intermediate frequency adjustments.
R.F. circuit adjustments including first detector.
Oscillator circuit adjustment.

In all cases of such adjustments to superheterodyne receivers the intermediate frequency adjustment should be made first and the R.F. and oscillator adjustments afterwards, except where only a slight adjustment of R.F. neutralizing or compensating condensers is required.

The I.F. adjustments of superheterodyne receivers may be divided into the three following classifications:

(a) I.F. transformers with secondary tuning condensers and neutralizing condensers. Receivers in this classification generally have two I.F. transformers with secondary tuning condensers and neutralizing condensers and a third I.F. transformer feeding into the second detector which has one or two secondary tuning condensers and no neutralizing condenser. Some typical receivers in this class are the following:

The Radiolas 60, 62, 64, 66, 67. The Westinghouse Models 89, 99, 99-A, 90 and 110. Receivers in this classification should be tuned and neutralized as given in Part II, Section 10. In the case of the Radiolas 60, 62 and 64, these adjustments should be carried out at 180 kilocycles, the Radiolas 66 and 67 at 175 K.C. The Westinghouse Models 89, 99, 99A, 90 and 110 are nominally rated at 175 K.C. but best results will usually be secured with Radio Service Oscillator S. No. H-25405, by adjusting these receivers at 171 K.C.

CANADIAN WESTINGHOUSE CO.

(b) I.F. transformers which have both primary and secondary tuning condensers and no neutralizing condensers, and which have the I.F. primary and secondary tuning condensers adjusted to give a peaked characteristic with maximum amplification. Some typical receivers in this classification are the Radiola Superette and the Westinghouse Model 801. Receivers in this classification should be adjusted as given in Part II, Section 11. Adjustments to the Radiola Superette should be carried out at 175 K.C. The Westinghouse Model 801 is nominally rated at 175 K.C. but best results will be usually secured with oscillator S. No. H-25405, if adjustments are carried out at 178 K.C.

(c) I.F. transformers which have both primary and secondary tuning condensers. Some I.F. transformers in the receiver are usually adjusted for a peaked characteristic with maximum amplification and some adjusted to have a flat top characteristic, and best tone quality. Some typical receivers in this classification are the Radiolas 80, 82, and 86, the Westinghouse Models WR-5, WR-6, WR-7, and WR-8, the Westinghouse Model 101. Adjustment of receivers in this classification should be carried on as given in Part II, Section 12. The adjustment to the following should be centered at 175 K.C. Radiolas 80, 82, and 86, Westinghouse Models WR-5, WR-6, WR-7 and WR-8. The Westinghouse Model 101 is nominally rated at 175 K.C. but best results will usually be secured with Oscillator S. No. H-25405 if the adjustment is centered at 178 K.C.

(d) I.F. transformers which do not require any adjustment. Some typical receivers in this classification are the Radiola Second Harmonic Superheterodyne, the Radiola Super-VIII, the Radiolas 26, 24, 25, 28, 30, 30-A, 32 and the Westinghouse Model 8.

The receiver oscillator circuit and R.F. circuit adjustments of superheterodynes should be carried out simultaneously. The adjustments are described in Part II, Section 13.

(10) ADJUSTING I.F. TRANSFORMERS.

(See Classification (a) Part II, Section 9).

Adjustments to I.F. transformers in this classification consist of two parts: tuning and neutralizing. If the I.F. transformers are in an oscillating condition, the neutralizing procedure should be followed out first. This will only give a rough adjustment and it is then necessary to follow the tuning procedure, then neutralize more accurately and finally go through the tuning procedure for an accurate adjustment. If the I.F. transformers are not in an oscillating condition it is simply necessary to tune, then neutralize, and then retune the I.F. transformers according to the following procedure:

Tuning: (a) Place the receiver in operation with the radiotron removed from the oscillator socket of the receiver.

(b) Place the service oscillator in operation with the R.F.—I.F. switch in the I.F. position and set the tuning dial to deliver the correct output frequency. (See Part II, Section 9).

(c) Use the hook-up illustrated in Figure 11, except that the dummy antenna may or may not be used and the coupling lead should be placed adjacent to the first detector coil in the receiver assembly. (or clipped to the control grid contact of the first detector).

(d) Adjust the tuning condenser of each intermediate frequency transformer in turn to secure the maximum reading on the output meter. Should oscillation occur at any time while adjusting the intermediate frequency transformers, the neutralizing procedure should be carried out before going further.

Neutralizing: The neutralizing condensers in the I.F. transformers of a superheterodyne receiver may be adjusted in exactly the same way as given for R.F. neutralizing condensers in Part II, Section 6. It is, however, usually more convenient to follow out the procedure below when the transformers are being tuned as well as neutralized.

(a) By means of the clip lead, feed a very strong signal from the service oscillator on to the control grid of the first detector radiotron of the receiver.

(b) Leave the service oscillator at the same point used in tuning the I.F. stages.

(c) Remove the radiotron from the oscillator socket of the receiver and leave this socket empty during the following procedure.

(d) Remove the radiotron from the first I.F. stage and insert a dummy radiotron.

(e) While listening to the output of the receiver with a pair of headphones, adjust the neutralizing condenser of the first intermediate frequency stage until the signal becomes a minimum. The other stages of intermediate frequency amplification should be neutralized in a similar manner, though it may be necessary to move the clip lead from the grid of the first detector radiotron to the grid of the tube preceding the stage to be neutralized.

Short-Cut Method of Adjusting I.F. Transformers: A short-cut in the adjustment of the intermediate frequency transformer except in cases where it is definitely known that the intermediate frequency transformers have been badly tampered with is to proceed as before but instead of tuning the test oscillator to 175 K.C. tune the oscillator to give maximum signal at the initial setting of the intermediate frequency transformers. Leave the test oscillator set at this position and tune the intermediate frequency transformers according to the regular procedure. This method results in aligning the intermediate frequency transformers with minimum adjustment and with minimum resulting adjustment to the oscillator trimming condensers.

CANADIAN WESTINGHOUSE CO.

(11) ADJUSTING I.F. TRANSFORMERS.

(See Classification (b), Part II, Section 9).

The following procedure should be used in adjusting I.F. transformers coming within this classification:

(a) Place the receiver in operation with the radiotron removed from the oscillator socket of the receiver.

(b) Place the service oscillator in operation with the R.F.—I.F. switch in the I.F. position and set the service oscillator tuning dial to deliver the correct output frequency.

(c) Use the hook-up illustrated in Figure 11 except that the dummy antenna may or may not be used and the coupling lead should be clipped to the control grid of the first detector radiotron.

(d) Adjust the primary and secondary tuning condensers of each I.F. transformer in turn to secure the maximum reading in the output meter in each case. Go through these adjustments a second time as a slight re-adjustment may be necessary.

(12) ADJUSTMENT OF I.F. TUNING CONDENSERS.

(See Classification (c) Part II, Section 9).

The first I.F. transformer—usually has its two windings very loosely coupled, which makes possible very sharp tuning of this first I.F. stage unless the "Quiet Tuning or "Local–Distant" switch is in the "on" position and resistance is added to the circuit. The other two transformers have their windings closely coupled—overcoupled—so that a flat top effect is obtained in the tuning curve. The reason for discussing the I.F. curve is that this type of coupling has a bearing on the method to be used for lining up the I.F. transformers. The second and third transformers being over-coupled, their tuning condensers are adjusted until a plus or minus equal frequency shift of the I.F. oscillator frequency will give the same ouput and a flat top effect is obtained on the tuning curve. This is not the adjustment of the condensers that will give a maximum output and is a different procedure from that used in previous super-heterodyne receivers. The first transformer being loosely coupled the tuning condensers are adjusted for maximum output.

A detailed procedure for making these adjustments follows:

(a) Place the set in such a position that access to all mechanism is obtained. Place the receiver in normal operation with the volume control at maximum and then remove the oscillator tube. Make sure a good ground connection has been made.

(b) Connect output meter in circuit. (See Fig. 11).

(c) Place the oscillator in operation and connect the coupling lead to the control grid connection of the first detector Radiotron. If excessive output is obtained reduce the oscillator output to cause an indication in the output meter without causing the needle to go beyond the scale.

(d) Now adjust the secondary and primary tuning condensers of the third, second and first I.F. transformers until maximum output is obtained.

(e) Shift the coupling lead to the control grid connection of the second I.F. Radiotron. Adjust the oscillator output until a suitable reading is obtained in the output meter. Then adjust the secondary and the primary of the third I.F. transformer until a maximum reading is obtained in the output meter. After obtaining maximum output we know the two windings are closely adjusted to the same frequency. Now they must be readjusted until a flat top effect is obtained in the tuning curve. The flat portion should be at least 5 K.C. wide and generally will not exceed 7 K.C. in width. The method of doing this is to shift the oscillator frequency back and forth from 171 K.C. to 179 K.C. and noting, when the condensers are adjusted, that no appreciable change in output reading is obtained from 172.5 K.C. to 177.5 K.C. Also the drop in output should be the same at 171 K.C. and 179 K.C. This indicates that the flat top is centered at 175 K.C. The usual method to obtain this characteristic is, after adjusting to maximum output, to adjust the capacity of the secondary condenser until the flat top effect is obtained. It will probably not be centered at 175. K.C. It is, however, easy to shift its center point by increasing each condenser slightly to shift it to a lower frequency or decreasing both condensers slightly to increase its frequency. To make this adjustment the first time will be somewhat difficult, but after a little experience it is equally as easy as other superheterodyne adjustments.

(f) After adjusting the third I.F. transformer, shift the coupling lead to the control grid connection of the 1st I.F. Radiotron and adjust the oscillator output so that too great an indication is not obtained in the output meter.

(g) Now adjust the secondary and primary condensers until maximum output is obtained. Then readjust in the same manner as with the third transformer until a flat top effect is obtained. This may not be quite as broad as the third transformer.

(h) Place the "Quiet Tuning (or "Local-Distant) switch in the "off" position. Then shift the coupling lead to the control grid connection of the first detector. Now adjust the oscillator output

CANADIAN WESTINGHOUSE CO.

until the meter reading is not excessive and then adjust the secondary and primary of the 1st I.F. transformer condensers until maximum output is obtained. This transformer tunes very sharply and no further adjustments are necessary.

In the case of the Westinghouse Model 101, the service oscillator frequency should be shifted back and forth from 174 to 182 K.C. and the output meter should give no appreciable change in reading from 175.5 K.C. to 180.5 K.C., also the drop in output should be the same at 174. K.C. as at 182. K.C. This indicates that the flat top is centered at 178 K.C.

(13) R.F. AND OSCILLATOR ADJUSTMENTS OF SUPERHETERODYNE RECEIVERS

The following procedure is recommended for performing these adjustments:—

(a) Place the receiver and service oscillator in operation using dummy antenna, coupling lead and output meter as illustrated in Figure 11.

(b) Unsolder the leads connected to the stator of the oscillator gang condenser section. Connect the lead from the grounded or shielded side of the external variable condenser (see Part II, Section 1) to the receiver assembly frame. Bring a lead from the other binding post of the external variable condenser and leave it not connected but adjacent to the leads formerly connected to the oscillator gang condenser section. Place a small battery clip on the end of the leads which were formerly connected to the oscillator gang condenser section so that these leads (or lead) may be clipped to their original position on the gang condenser or to the ungrounded lead from the external condenser.

(c) Connect the above mentioned clip to the ungrounded lead from the external variable condenser. The station selector knob now tunes the R.F. stages of the receiver independently of the receiver oscillator circuit, the receiver oscillator circuit being now tuned by the external variable condenser.

It should be noted that connection of the external variable condenser is not necessary in the case of older type sets which have a separate control for the oscillator tuning condenser. Some typical receivers which have these separate control for the oscillator tuning condenser are the Radiola Second Harmonic Superheterodyne, the Radiolas 26, 24, Super-VIII, 25, 28, 30, 30A, 32 and the Westinghouse Model 8.

(d) Now that the radio frequency and oscillator circuits of the receiver have been isolated from each other, the adjustment of the R.F. neutralizing condensers, R.F. compensating condensers, R.F. gang condensers sections or station selector calibration may be carried out in exactly the same manner as for an ordinary R.F. set. (See Part II, Section 4). It will be necessary when tuning the station selector to also tune the external variable condenser, each time to give maximum output. The following receivers should have their R.F. adjustments made as given in Classification (a), Part II, Section 4—Radiolas 28, 30. The following receivers should be adjusted according to Classification (b) Part II, Section 4—Radiolas 60, 62, 64, 67, 66, Westinghouse Models 89, 90, 99, 99A, and 110. The following receivers should have R.F. adjustments made as given in Classification (c), Part II, Section 4—Radiolas 30-A, 32, and Westinghouse Model 8. The following receivers should have their R.F. adjustments made as given in Classification (d), Part II, Section 4—the Radiolas 80, 82, and 86, the Westinghouse Models WR-5, WR-6, WR-7, WR-8, 101 and 801.

It should be noted that if while making the above R.F. adjustments a bad oscillation condition is encountered, the receiver oscillating over the entire broadcast range, the oscillation is probably due to the I.F. stages and not the R.F. stages. If the oscillation extends only over a part of the broadcast range it is probably due to the R.F. circuits. In either case the oscillation should be stopped before proceeding with the R.F. adjustment.

This completes the R.F. adjustment of the superheterodyne type of receiver and the oscillator circuit adjustments should be made as described below to maintain the correct frequency difference between the R.F. and oscillator circuits over the entire receiver range.

(e) Set the service oscillator to 1500 K.C. and adjust the external variable condenser and the station selector of the receiver to give maximum reading in the output meter. Leaving the gang condenser set in this position, move the clip from the external condenser lead to the stator of the oscillator gang condenser section. Now adjust the trimming condenser on the oscillator gang condenser section to secure a maximum reading in the output meter.

(f) Remove the clip from the oscillator gang condenser section and clip on to the lead from the external condenser. Set the service oscillator to the next lower frequency used previously in the line-up of the R.F. gang condenser sections. Adjust both the station selector and the external variable condenser to give maximum reading in the output meter. Place the clip lead back on the oscillator gang condenser section stator and adjust the capacity of the oscillator gang condenser section at that point by squeezing or spreading the outside plates to secure a maximum reading in the output meter. If it is necessary to move the gang condenser from its setting while bending the condenser plate always return it to its previous setting and check its capacity before going on to the next position.

(g) Repeat the same procedure as in (f) at the other frequency points at which the R.F. gang condenser sections were aligned.

CANADIAN WESTINGHOUSE CO.

(h) The above procedure may be applied to any superheterodyne receiver with gang condenser control, but in the case where adjustable series and shunt tuning condensers are incorporated in the receiver to line up the oscillator circuit it is usually preferable to modify this procedure slightly. No. attempt should be made to line up the oscillator circuit at 1500 K.C. Adjustments should be made to the oscillator shunt trimming condenser at 1400 K.C. and the oscillator series trimming condenser at 600 K.C. similar to that described above in (f) as being done at 1500 K.C. The intermediate points between 1400 and 600 K.C. of the oscillator gang condenser section should be adjusted as in (g) above. Some typical receivers incorporating both oscillator series and shunt trimming condensers are the following.

Radiolas 60, 62, 64, 66, 67, 80, 82, 86, Westinghouse Models WR-5, WR-6, WR-7, WR-8, 89, 90, 99, 99A, and 110.

(14) ADJUSTMENTS TO RECEIVERS WHICH HAVE AUTOMATIC VOLUME CONTROLS.

In most R.F. receivers and also superheterodyne receivers it is quite permissible to adjust the volume control during the adjusting procedure in order to secure a more convenient reading on the output meter. Exceptions to this rule are adjustments to neutralizing or compensating condensers, which should always be carried out with the receiver volume control at its maximum position.

In the case of radio receivers which have an automatic volume control feature incorporated it is essential that all adjustments be carried out with the receiver manual volume control at its maximum position and the service oscillator supplying a very weak signal (except in the case of the neutralizing adjustment when a strong signal is required). This is necessary to prevent the automatic volume control from holding the output meter reading constant in spite of the adjustments that are being made. Other than this, adjustments to receivers incorporating an automatic volume control may be carried out in exactly the same manner as other sets.

Model 61

ELECTRICAL DESCRIPTION OF CIRCUIT

A unit type of construction is used on Model 61; that is, the receiver and power parts are all built into a single unit, see Figures 3 and 4. Numerous advantages are present in this type of construction. Individual shields are placed over each, so that a very complete system of shielding is present.

Examining the circuits we find the following functions taking place. See Figure 2.

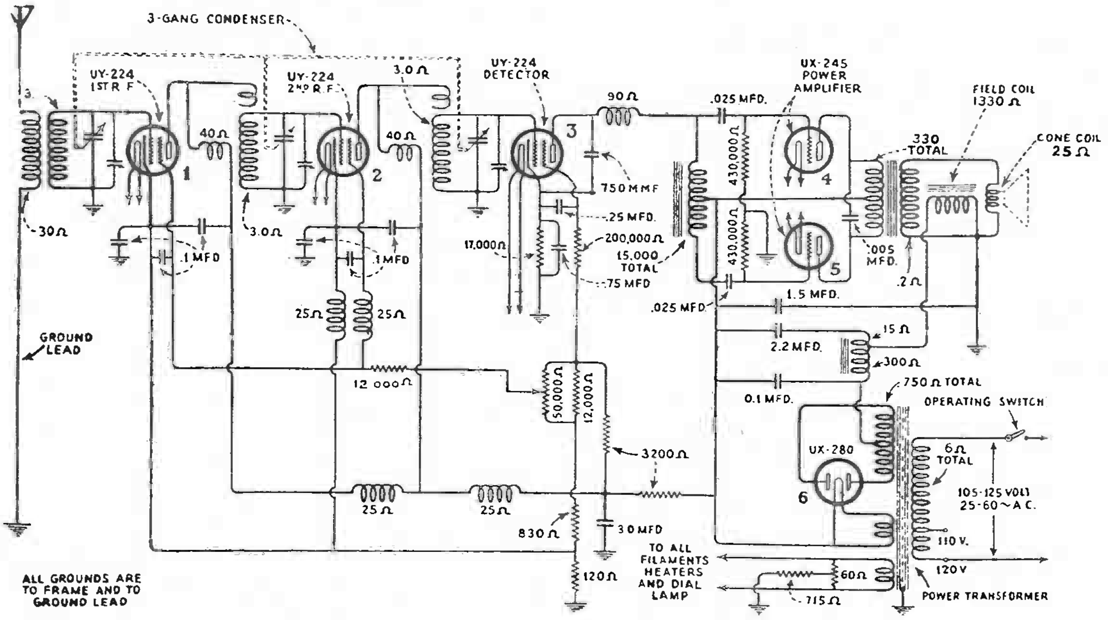

Fig. 2—Schematic Circuit Diagram

The secondary of the antenna R.F. transformer is connected to the grid circuit of the first R.F. Radiotron UY-224, which is tuned by the first unit of the gang condenser. The plate circuit of this tube contains a high impedance coil located inside the grid coil of the second R.F. transformer. This plate coil is of the correct impedance to match the UY-224 and is at right angles to

CANADIAN WESTINGHOUSE CO.

the grid coil in which it is located. This is done so that the inductive coupling between these circuits is at a minimum. A single turn at one end of the grid coil is connected to the plate of the UY-224 and provides capacitive coupling between the circuits.

The reason for using capacitive instead of inductive coupling is due to the fact that the primaries of the R.F. transformer resonate at about 350 K.C. with receiver capacitance and tend to increase the sensitivity at the low end of the range. Capacitive coupling has less reactance to high frequencies than to low frequencies, thereby increasing the effective coupling at the high frequency end. A combination of the two gives about an equal gain throughout the tuning range.

The following R.F. circuit functions in the same manner as the one already described. The screen grid voltage of these two Radiotrons is varied by means of the volume control. This action gives a positive control of volume without distortion.

The detector circuit functions as a biased-grid, power detector operating at a high plate voltage so that an output sufficient to swing the two Radiotrons UX 245 to maximum output is obtained. The detector tube is operated at 250 volts plate potential and 10 volts negative grid bias.

As the detector is a Radiotron UY-224 and must therefore work into a high impedance, a transformer would not be suitable for coupling it to the grid circuit of two Radiotrons UX-245. Impedance coupling is therefore used, one-half of a tapped reactor being in the plate circuit of the detector. This reactor is of quite high impedance and functions as an auto transformer. Two coupling condensers are used to pass the A.C. component of the detector output to the grid of the Radiotrons UX-245. Two high resistance units are used so that the proper grid bias may also be impressed on these tubes.

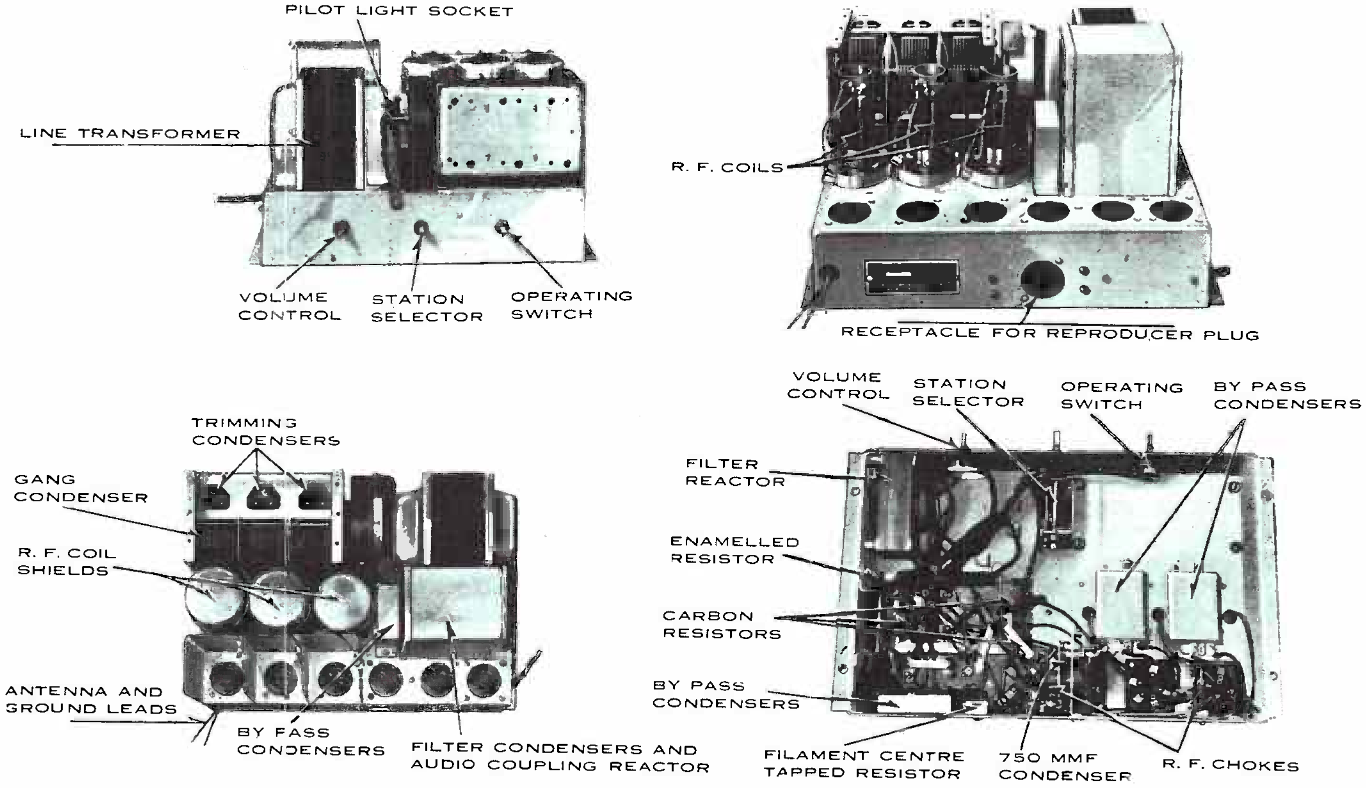

Fig. 3—Various views of chassis, showing parts

The output of the Radiotrons UX-245 is coupled to the cone coil of the electro-dynamic speaker through a center-tapped primary, step-down transformer.

A full wave rectifying circuit employing Radiotron UX-280 is used to provide the direct current voltages necessary for plate and grid supply to all Radiotrons and also for field current supply to the electro-dynamic loudspeaker. The filter circuit is of the type employed in the Super-Heterodyne models with the exception that a .1 mfd. condenser is used to by-pass any high frequency ripple that may be present in the rectified output. An explanation of the action of this filter follows.

Figure No. 2 shows the first stage of the filter having two condensers and a tapped reactor. The condensers function in the usual manner, acting as reservoirs to hold the current from one impulse to the next. The tapped reactor functions somewhat differently from the usual manner however. The D.C. current flows through one section of it, the other section being connected to a

CANADIAN WESTINGHOUSE CO.

condenser. However, an A.C. voltage is present across the other section due to its transformer action similar to an auto transformer. This voltage is 180 degrees out of phase with the ripple voltage across the second condenser and to a large extent cancels out all ripple flowing from the tap to succeeding circuits. This results in the output of this section filter being substantially free from ripple. The field of the reproducer unit is connected in series with this output and further removes the slight ripple voltage remaining. The condensers are of ample capacity for proper filtering.

(4) JERKY ACTION OF STATION SELECTOR

Should operation of the station selector be stiff or jerky, a little oil dropped on each condenser bearing will effectively remedy this condition. When experiencing this trouble it is also well to check the cable tension spring to make sure that suitable tension is being applied to the condenser drive cable.

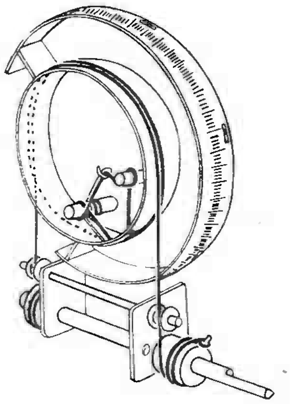

Fig. 6—Drive cord arrangement

Part II. Service Data

(1) ANTENNA SYSTEM FAILURES

A grating noise may be caused by a poor lead-in connection to the antenna, or the antenna touching some metallic surface such as the edge of a tin roof, drain pipe, etc. By disconnecting and shorting the antenna and ground leads the service man can soon determine whether the cause of complaint is within or external to the receiver and plan his service work accordingly.

(2) RADIOTRON SOCKETS AND PRONGS

The tube sockets used in this set are of an improved type having a large contact surface and should require a minimum of service work. In order to get best results, however, the tube prongs should be periodically cleaned, as dirty Radiotron prongs may cause noisy operation. Fine sandpaper may be used to clean them so as to insure a good contact surface. The use of emery cloth or steel wool is not recommended. Before re-inserting the Radiotrons in their sockets wipe the prongs and bases carefully to make certain that all particles of sand are removed.

(3) BROKEN CONDENSER DRIVE CORD

The gang condenser is driven from the station selector knob by means of a cord arrangement that also functions as a vernier control. This cord is of rugged construction and a spring is used to maintain an even tension at all times. Should the cord become disengaged from the drum or a new cord be required, follow the arrangement indicated in Figure 6 for the correct position of the cord on the drum, otherwise the cord length will be incorrect or the stops on the shaft will engage at the wrong time.

If a standard replacement drive cord is not available one may be improvised from a length of rugged fish cord. If this is done it should be noted that the completed length of the drive cord from the extreme end of the loops should be 32½″.

(4) ALIGNMENT OF GANG CONDENSER

Three small adjustable condensers connected in parallel to the main tuning condensers are provided to line up the circuits at the high frequency end of the scale and also to allow a line up that will cause the dial to read correctly at the high frequency end. A need for re-adjustment of these condensers is indicated by insensitivity of the receiver not due to other causes.

The gang condenser may be aligned according to the general instructions given in Service Manual Section No. RS-105 covering the use of Radio Service Oscillator S No. H-23618. In general it will not be necessary to make any other adjustment for alignment than to adjust the three small condensers. The design of this set follows the present tendency in manufacture to have the radio frequency circuit very close to oscillation at the low frequency end of the scale. In

CANADIAN WESTINGHOUSE CO.

manufacture the gang condenser is aligned all over the scale sufficiently close to give good selectivity and sensitivity but not aligned sufficiently accurately to cause oscillation.

In general this adjustment is not as critical as the former method of accurate alignment of gang condensers over the entire scale. If however oscillation occurs at the low frequency end of the scale and the set still has normal sensitivity or better the gang condenser plates may be adjusted slightly to prevent oscillation. This should not be done however unless it is definitely found that oscillation is not due to tubes, poor contact of tube or RF shield or other causes.

To adjust the gang condenser in this way it is necessary to remove the shield from the gang condenser, make a slight adjustment in or out of the outside rotor plate of one gang condenser at the low frequency end of the scale, the set should then be operated to note whether the condition of oscillation has been corrected, if not a slight additional adjustment should be made in a similar manner and continued on one or the other of the gang condensers until the condition disappears and the sensitivity of the set is still normal.

If the sensitivity of the set when the RF line-up condensers are adjusted at the high frequency end is normal at the high frequency end but weak at the low frequency end a similar method should be used to line up the gang condensers at the low frequency end until sufficient sensitivity without oscillation is secured. The gang condenser outside rotor plates are slotted so as to facilitate this adjustment.

A special socket wrench is available under S No. H-23714 for making adjustments to the line-up condensers.

(5) RECENTERING REPRODUCER CONE.

(A).—In Midget Model 61.

1. Remove the reproducer assembly from the cabinet.
2. Slacken the four screws that hold the field coil assembly to the reproducer frame.
3. Take three or more strips of thin card (an ordinary visiting card has approximately the right thickness) about ten thousandths of an inch thick ¼ inch wide and 2 or 3 inches long.
4. Insert these strips of card lengthwise at equal distances apart between the aluminum ring of the cone and the iron core.
6. Tighten the four field coil mounting screws and remove the cardboard strips.
7. Check the operation of the speaker by testing it before returning it to the cabinet.

In most cases this adjustment can be made from the rear of the set without removing the reproducer from the cabinet. In this case as before the field coil mounting screws are slackened and the position of the field coil adjusted by trial until the cone vibrates freely.

(B).—Consolette Model 61.

1. Remove the reproducer assembly.
2. Remove the nuts, screws, and lock washers that hold the metal ring and cone in place.
3. Slacken the cone centering screw.
4. Place three pieces of cardboard the thickness of a visiting card and approximately 1½ inches by ¼ inches in size, in the space between the inside of the cone coil and the pole piece.
5. Tighten the cone centering screw.
6. Remove the pieces of card and check the operation of the speaker before returning it to the cabinet.

(6) SERVICE DATA CHART

The following Service Data Chart gives the cause and remedy of the most common indications of a defective receiver. If following the suggestions in this chart does not remedy any trouble that occurs, then the Voltage Reading Service Data Chart should be used to isolate the trouble. See Part III, Section 3.

Before making any tests or repairs, check the conditions of all the Radiotrons. A defective tube can be the cause of practically any indication that might be observed.

CANADIAN WESTINGHOUSE CO.

SERVICE DATA CHART

Indication	Cause	Remedy
No Reception	No current at Outlet	Turn line current "On"
	Defective Operating Switch	Repair or replace operating switch.
	Open cone or field coil in reproducer	Repair or replace defective part in reproducer unit.
	Defective parts in chassis	Test by means of voltage readings or continuity tests and repair or replace any defective parts.
Low Volume	Poor antenna system	Install antenna system as suggested on instruction book
	Shorted field coil in reproducer unit	Repair any defect in reproducer
	R.F. stages not properly aligned	Realign circuits as suggested in Part II, Sections 4 and 5.
	Defective parts in chassis	Test by means of voltage readings or continuity test and repair or replace any defective parts.
Poor Quality	Receiver not properly tuned	Tune in station properly
	Receiver improperly aligned	Align receiver properly as given in Part II, Sections 4 and 5.
	Defective coupling reactor	Replace coupling reactor unit.
	Defective coupling condenser	Replace coupling condenser.
	Defective output transformer	Repair or replace output transformer.
Audio Howl	Shipping blocks not removed	Remove shipping blocks
	Defective cushion supports	Replace any defective support. The receiver assembly should not be rigidly mounted to the cabinet
	Oscillation	R.F. oscillation will cause a whistle or howl when a signal is tuned in. Remove the cause of oscillation.
	By-pass condenser not properly mounted causing poor connection to frame	Check all by-pass condensers and make sure they are mounted securely to chassis frame.
	Open by-pass condenser	Repair or replace any open by-pass condenser.
	Broadcasting station heterodyne	This is caused by transmitting stations and is no fault of the receiver.
Oscillation	Poor ground	Connect set to good ground.
	Shields not in place	Make sure all shields are tightly in their proper positions.
	Open or shorted by-pass condenser	Replace any defective condenser or repair any poor connections.
	Radiotron	A defective Radiotron UY-224 may cause oscillation and should be replaced by one known to be in good operating condition.
	Screen grid resistor	Make sure screen grid resistor is 16,000 ohms.
Hum	Defective Radiotron UX-280	Replace defective Radiotron
	Shorted field coil	Repair or replace field coil.
	Grounded heater lead	Remove the cause of any grounds
	Loose laminations in filter reactor	Tighten filter reactor clamping screw.
	Shorted by-pass condenser from C4 to ground.	Replace defective condenser.
Nois Volume Control	Poor contact of arm	Work contact arm back and forth several times. If trouble does not clear up, replace volume control.

Part III. Electrical Tests

(1) VOLTAGE SUPPLY SYSTEM

Figure 7 illustrates the schematic diagram of the voltage supply system together with the values of the various resistors.

(2) VOLTAGE READINGS AT RADIOTRON SOCKETS

The following voltages taken at each Radiotron socket with the receiver in operating condition should prove of value when checking with test sets such as a Weston Model 547, Type 3, or others giving similar readings. The plate currents shown are not necessarily accurate for each tube, as the circuits will oscillate. Small variations of voltages will be caused by different tubes and line voltages. Therefore, the following values must be taken as approximately those that will be found under varying conditions. Figure 8 shows a simplified schematic circuit diagram. The numbers in Column 1 indicate the tube socket numbers shown in Figure 9.

(3) VOLTAGE READING SERVICE DATA CHART

The service data chart on page 14 provides a means of diagnosing trouble from socket voltage readings taken with any of the usual set analyzers.

CANADIAN WESTINGHOUSE CO.

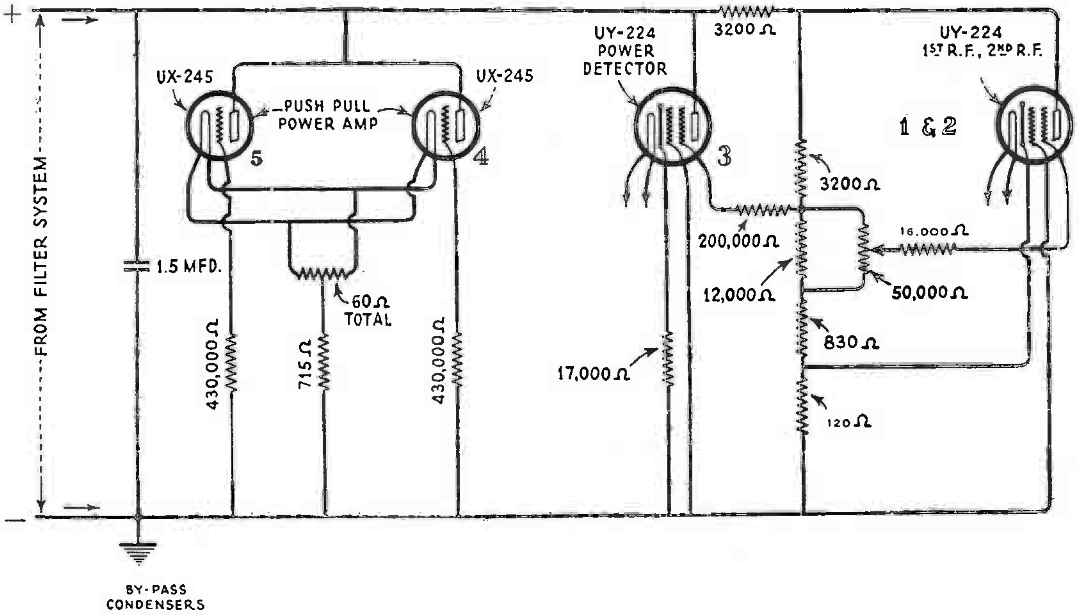

Fig. 7—Schematic circuit of diagram of voltage supply system

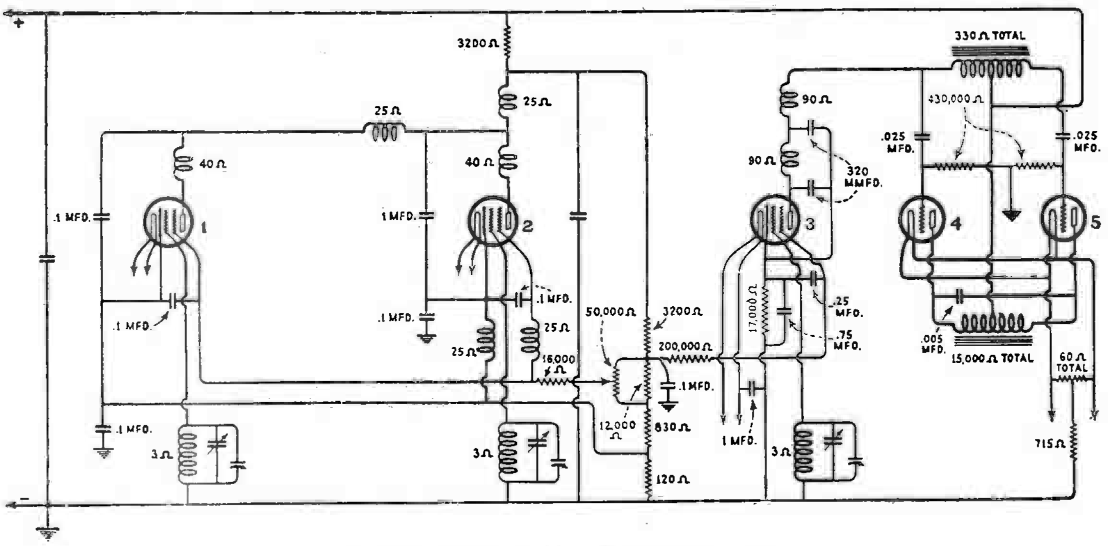

Fig. 8—Simplified schematic circuit diagram

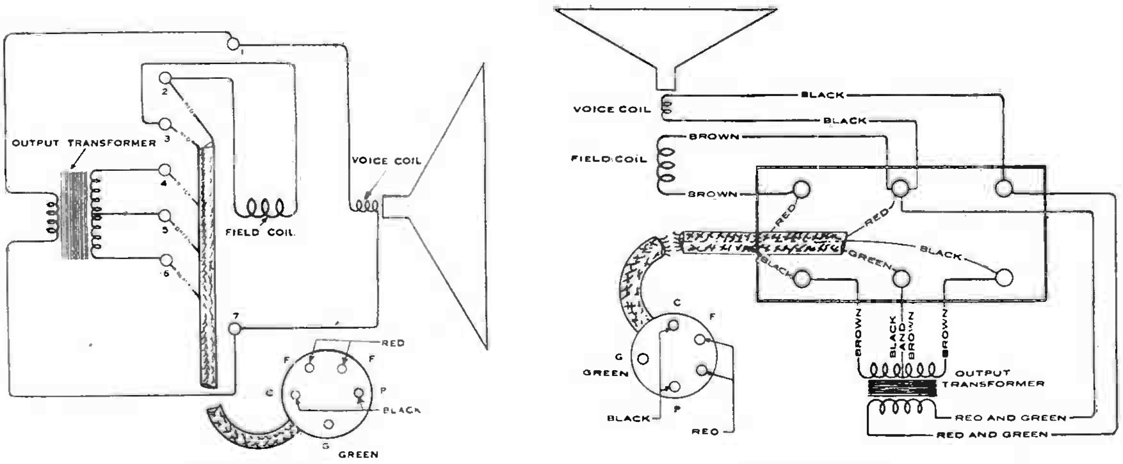

(A) Midget

(B) Consolette

Fig. 10—Internal Connections of Reproducer

CANADIAN WESTINGHOUSE CO.

(4) CONTINUITY TESTS

The following tests will show complete continuity for the receiver assembly of this instrument. Disconnect the antenna and ground leads, and the A.C. supply cord at its outlet.

A pair of headphones with at least 4½ volts in series, or a voltmeter with sufficient battery to give a good deflection when connected across the battery terminals, should be used in making these tests.

VOLTAGE READING SERVICE DATA CHART

Volume Control at Maximum

VOLTAGE CHARACTERISTICS	TUBE 1 1st R.F.				TUBE 2 2nd R.F.				TUBE 3 DETECTOR				TUBE 4 POWER A.F.			TUBE 5 POWER A.F			Cause of Incorrect Reading
	C.G. Volts	S.G. Volts	Plate Volts	Plate M.A.	C.G. Volts	S.G. Volts	Plate Volts	Plate M.A.	C.G. Volts	S.G. Volts	Plate Volts	Plate M.A.	Grid Volts	Plate Volts	Plate M.A.	Grid Volts	Plate Volts	Plate M.A.	
Normal	3·0	95	180	3·0	3·3	95	180	3·0	4·5	27	240	0	6·0	210	27	6·0	210	27	
No. C.G. Voltage on Tube No. 1	0	80	150	6·0	....	....	....	....	....	....	....	....	....	....	....	....	....	....	Open Secondary of 1st R.F. Transformer
No. C. G. Voltage on Tube No. 2	....	....	....	....	0	75	150	5·5	....	....	....	....	....	....	....	....	....	....	Open Secondary of 2nd R.F. Transformer
No C.G. Voltage on Tube No. 3	....	....	....	....	....	....	....	....	0	18	200	1·0	....	....	....	....	....	....	Open Secondary of 3rd R.F. Transformer
No Plate Voltage on Tube No. 1	2·5	80	0	0	....	....	....	....	....	....	....	....	....	....	....	....	....	....	Open Primary of 2nd R.F. Transformer
No Plate Voltage on Tube No. 2	....	....	....	....	2·5	75	0	0	....	....	....	....	....	....	....	....	....	....	Open Primary of 3rd R.F. Transformer
No Plate Voltage on Tube No. 3	....	....	....	....	....	....	....	....	3·5*	18*	0	0	....	....	....	....	....	....	Open Coupling Reactor or Detector R.F. Choke
No Plate Voltage on Tube No. 4	....	....	....	....	....	....	....	....	....	....	....	....	2·0	0	0	5·0	210	45	Open Primary of Output Transformer
No Plate Voltage on Tube No. 5	....	....	....	....	....	....	....	....	....	....	....	....	5·0	210	45	2·0	0	0	Open Primary of Output Transformer
No S.G. Voltage on Tube No. 2	2·5	100	155	4·5	2·5	0	165	0	4·0	60	240	0	....	....	....	....	....	....	Open S.G. R.F. Choke
No Voltages on Tube No. 2	2·5	80	170	3·0	18*	0	0	0	4·0	60	240	0	....	....	....	....	....	....	Open R.F. Choke Connected to Cathode of Tube No. 2
No Plate Voltages on Plates Nos. 1 and 2	2·1	60	0	0	2·1	60	0	0	10	60	240	0	....	....	....	....	....	....	Open R.F. Plate Supply Choke
No C.G. Voltages on Tubes Nos. 1 and 2	0	80	150	4·5	0	75	150	4·5	30	8·0	195	1·5	....	....	....	....	....	....	Shorted 0.1 Mfd. Condenser from Cathode No. 1 to Ground
No C.G. Voltages on Tubes Nos. 1 and 2	0·4	75	150	3·5	0	80	155	4·5	30	2·0	185	1·5	....	....	....	....	....	....	Shorted 0.1 Mfd. Condenser from Cathode No. 2 to Ground
No S.G. Voltages on Tubes Nos. 1 and 2	2·5	0	180	0	2·5	0	180	0	....	....	....	....	....	....	....	....	....	....	Shorted 0.1 Mfd. Condenser from S.G. No. 1 or 2 to Cathode
No Plate Voltages on Tubes Nos. 1 and 2	7·0	1·0	0	0	8·0	0	0	0	0	1·0	175	0	....	....	....	....	....	....	Shorted 0.1 Mfd. Condenser from Plate No. 2 to Cathode
No Plate Voltages on Tubes Nos. 1 and 2	7·0	1·0	0	0	7·0	1·0	0	0	0	1·0	175	0	....	....	....	....	....	....	Shorted 0.1 Mfd. Condenser from Plate No. 1 to Cathode
No C.G. Voltage on Tube No. 3	....	....	....	....	....	....	....	....	0	8·0	220	2·0	....	....	....	....	....	....	Shorted 0.75 Mfd. Condenser across Detector Bias Resistor
No S.G. Voltage on Tube No. 3	....	....	....	....	....	....	....	....	12	0	220	0·5	....	....	....	....	....	....	Shorted 0.25 Mfd. Condenser from S.G. to Cathode Tube No. 3
No C.G. or S.G. Voltages on Tubes Nos. 1 and 2	0	0	110	0	0	0	110	0	0	0	200	0	....	....	....	....	....	....	Shorted 0.1 Mfd. Condenser from Ground to Volume Control
Low Plate and S.G. Voltages on Tubes Nos. 1, 2 and 3	1·2	38	80	0·8	1·4	30	80	1·5	4·5	9	105	0·5	0	115	58	0	115	58	Shorted 0.1 Mfd. Condenser from Ground to No. 3 Heater
No Voltages on Tube No. 3	2·8	60	170	0·75	2·8	60	165	3·8	20T	0	0	0	....	....	....	....	....	....	Open 17,000-Ohm Resistor
No S.G. Voltage or Plate M.A. on Tube No. 3	2·5	80	165	2·0	3·0	60	165	3·8	5·5	0	220	0	....	....	....	....	....	....	Open 200,000-Ohm Resistor
High C.G. and Low S.G. Volts on Tube No. 3	....	....	....	....	....	....	....	....	19	24	210	1·25	....	....	....	....	....	....	Open 12,000-Ohm Resistor Across Volume Control
No Voltages on Tubes Nos. 1 and 2	0	0	0	0	0	0	0	0	0	0	260	0	....	....	....	....	....	....	Open 3,200-Ohm Section of Voltage Dividing Resistor
No C.G. or S.G. Voltages on Tubes Nos. 1, 2 and 3	0	0	265	0	0	0	265	0	0	0	260	0	....	....	....	....	....	....	Open 3,200-Ohm S.G. Supply Resistor
High C.G. Voltages on Tube No. 3	2·6	65	170	1·1	2·8	60	165	4·0	16	50	210	1.2	....	....	....	....	....	....	Open S.G. Voltage Section of Volume Control
High C.G. Voltage on Tube No. 3	2·0	80	190	2·2	3·6	75	180	5·8	20	70	205	1·3	....	....	....	....	....	....	Open 830-Ohm Section of Voltage Dividing Resistor
Very High C.G. Voltage on Tubes Nos. 1, and 2	255*	0	0	0	255*	0	0	0	16	145	245	1·0	....	....	....	....	....	....	Open 120-Ohm Section of Voltage Dividing Resistor
No S.G. Voltage on Tubes Nos 1 and 2	1·8	0	195	0	1·8	0	195	0	7·4	85	230	0·5	....	....	....	....	....	....	Open Volume Control Arm or 12,000-Ohm Resistor
High Plate Current on Tube No. 4	....	....	....	....	....	....	....	....	....	....	....	....	0	150	70	6·0	150	0	Open 430,000-Ohm Resistor
High Plate Current on Tube No. 5	....	....	....	....	....	....	....	....	....	....	....	....	6·0	150	0	0	150	70	Open 430,000-Ohm Resistor
High Plate Current on Tube No.4	....	....	....	....	....	....	....	....	....	....	....	....	+43	70	85	-8·0	80	0	Shorted .025 Mfd. Condenser
High Plate Current on Tube No. 5	....	....	....	....	....	....	....	....	....	....	....	....	-8	80	0	+43	70	85	Shorted .025 Mfd. Condenser

*Caused by meter connection. No voltage present in operation.

CANADIAN WESTINGHOUSE CO.

The resistance of the various circuits are shown in the column titled "Correct Effect" Checking the resistance of the circuits adds an additional check on their correct functioning. This may be done by means of a direct reading "Ohmmeter," a resistance bridge, the voltmeter-ammeter method or the method suggested in previous Service Notes.

Radiotron socket numbers used in making these tests are shown in Figure 9. The schematic diagram, Figure 2, gives the values of the parts of the various circuits. Figure 8, the simplified schematic circuit diagram, is useful when making these tests.

Terminals	Correct Effect	Incorrect Effect	
		Indication	Caused By
Ant. lead to Ground lead	Closed (30 ohms)	Open	Open antenna coil.
C1 to Ground	Closed (120 ohms)	Open	Open 120-ohm section of voltage divider resistor.
		Short	Shorted 0.1 mfd. condenser from C1 to Ground
		Closed (21 ohms)	Shorted 0.1 mfd. condenser from C3 to Ground.
CG1 to Ground	Closed (3 ohms)	Open	Open secondary of 1st R.F. transformer
		Short	Shorted 1st tuning or line-up condenser.
SG1 to C1, (Vol. Cont. at "Min".—	Closed (16,830 ohms)	Open	Open 16,000-ohm resistor or 830-ohm section of voltage divider resistor.
		Short	Shorted 0.1 mfd. condenser from SG1 to C1.
		Closed (50 ohms)	Short 0.1 mfd. condenser from SG3 to C3.
P1 to Ground	Closed (14,000) ohms)	Open	Open primary of 2d R.F. transformer R.F. choke, 3,200-ohm resistor, 12,000-ohm resistor and volume control, 830-ohm or 120-ohm section of voltage divider.
		Closed (160 ohms)	Shorted 0.1 mfd. condenser from C1 to plate supply.
		Closed (210 ohms)	Shorted 0.1 mfd. condenser from C3 to plate supply
		(Closed (54,240 ohms)	Open 12,000-ohm resistor across volume control.
		Closed (16,240 ohms)	Open volume control.
		Closed (90 ohms)	Shorted 1.0 mfd. condenser.
SG2 to SG1	Closed (25 ohms)	Open	Open R.F. Choke.
C2 to C1	Closed (25 ohms)	Open	Open R.F. Choke
P2 to P1	Closed (105 ohms)	Open	Open primary of 3d or 4th R.F. transformer or R.F. Choke.

*This may be higher on some sets due to the volume control arm not covering the full range of the resistance unit.

RADIOTRON SOCKET VOLTAGES—120-VOLT LINE

Tube No.	Cathode or Filament to Control Grid-Volts D.C.	Cathode to Screen Grid Volts D.C.	Cathode or Filament to Plate Volts D.C.	Plate Current M.A.	Screen Grid Current M.A.	Heater or Filament Volts
			Volume Control at Maximum			
1	—3.0	+95	180	3.0	0.9	2.3
2	—3.0	+95	180	3.0	0.8	2.3
3	—4.5	+27	240	0	0	2.3
4	*—6.0	—	210	27.0	—	2.5
5	*—6.0	—	210	27.0	—	2.5
			Volume Control at Minimum			
1	—2.0	+ 0	220	0	0	2.3
2	—2.0	+ 0	220	0	0	2.3
3	—6.0	+33	250	0	0	2.3
4	*—6.0	—	225	30.0	—	2.5
5	*—6.0	—	225	30.0	—	2.5

*Not true reading due to resistor in circuit.

CANADIAN WESTINGHOUSE CO.

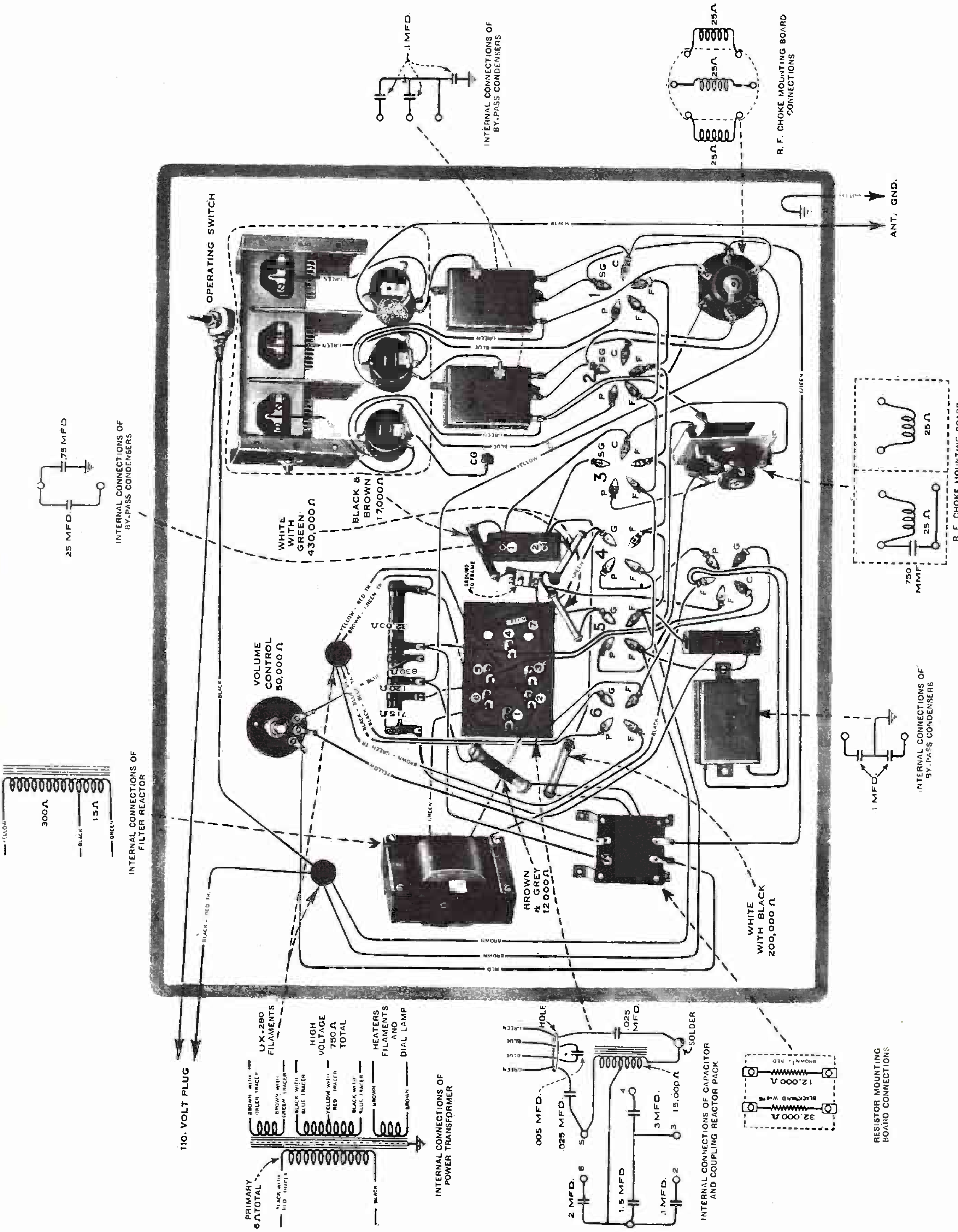

Fig. 9—Layout and Complete Wiring Diagram.

CANADIAN WESTINGHOUSE CO.

CONTINUITY TESTS—*Continued*

Terminals	Correct Effect	Incorrect Effect	
		Indication	Caused By
G5 to Ground	Closed (430,000 ohms)	Open	Open 430,000-ohm resistor.
G4 to Ground	Closed (430,000 ohms	Open	Open 430,000-ohm resistor
P5 to P4	Closed (330 ohms)	Open	Open primary of output transformer
		Short	Shorted .005 mfd. condenser.
Across secondary of output transformer (cone coil disconnected)	Closed (.2 ohms)	Open	Open secondary of output transformer
Across cone Coil (Output transformer disconnected)	Closed (2.5 ohms)	Open	Open cone coil
G6 to P6	Closed (750 ohms)	Open	Open high voltage winding of power transformer
G6 or P6 to Ground	Closed (2115 ohms)	Open	Open high voltage winding of power transformer, filter reactor or reproducer field coil.
Across F6 contacts	Closed Short	Open	Open UX-280 filament winding
Either side of filament contacts of sockets 1, 2, 3, 4, or 5	Closed (745 ohms)	Open	Open 60-ohm center tapped resistor or 715-ohm bias resistor
		Short	Shorted 0.1 mfd. condenser from heater to ground of Socket No. 3
Across AC.. input plug	Closed (6 ohms)	Open	Open primary of power transformer
Either F6 to Ground	Closed (17,350 ohms)	Open	Open either 3,200-ohm resistor, 12,000-ohm resistor and volume control, 830-or 120-ohm section of voltage divider.
		Closed (57,350 ohms)	Open 12,000-ohm resistor across volume control.
		Closed (19,350 ohms)	Open volume control.
		Closed (3,200 ohms)	Shorted 1.0 mfd. condenser
		Closed (1,345 ohms)	Shorted 2.0 mfd. condenser
		Closed (1,630 ohms)	Shorted .1 mfd. condenser
		Short	Shorted 1.5 mfd. filter condenser.
C2 to Ground	Closed (145 ohms)	Open	Open R.F. choke or 120-ohm section of voltage divider.
		Short	Short 0.1 mfd. condenser from C3 to ground.
		Closed (21 ohms)	Short 0.1 mfd. condenser from C1 to Ground.
SG1 to F6 (Vol. Cont. in Max. Position)	Closed (22,400 ohms)	Open	Open 3,200-ohm resistor or 160,00 ohm resistor.

CONTINUITY TESTS—*Continued*

Terminals	Correct Effect	Incorrect Effect	
		Indication	Caused By
CG2 to Ground	Closed (3 ohms)	Open	Open secondary of 3d R.F. transformer
		Short	Shorted 3d tuning or line-up condenser.
SG2 to C2 (Vol. Cont. at "Min")	Closed (16,880 ohms)	Open	Open cathode or S.G. choke, 16,000-ohm resistor or 830-ohm section of voltage divider resistor.
		Short	Shorted 0.1 mfd. condenser from C3 to SG3.
		Closed (50 ohms)	Shorted 0.1 mfd. condenser from C1 to SG1.
SG2 to centre tap on volume control	Closed (16,025 ohms)	Open	Open R.F. choke or 16,000-ohm resistor.
P2 to Ground	Closed (13,940 ohms)	Open	Open primary of 4th R.F. transformer, R.F. choke, 3,200-ohm resistor and volume control, 830-ohm or 120-ohm section of voltage divider.
		Closed (185 ohms)	Shorted 0.1 mfd. condenser from C3 to plate supply or from C1 to plate supply.
		Closed (54,215 ohms)	Open 12,000-ohm resistor across volume control.
		Closed (16,215 ohms)	Open volume control.
		Closed (65 ohms)	Shorted 1.0 mfd. condenser.
C3 to Ground	Closed (17,000 ohms)	Open	Open 17,000-ohm resistor.
		Short	Shorted 0.75 mfd. condenser across 17,000-ohm resistor.
CG3 to Ground	Closed (3 ohms)	Open	Open secondary of 4th R.F. transformer
		Short	Shorted 4th tuning or line-up condenser
SG3 to SG1 (Vol. Cont. at "Max.")	Closed (216,000 ohms	Open	Open 200,000-ohm or 16,000-ohm resistor.
C3 to P3	Closed (41,707 ohms)	Short	Shorted 750 mfd. condenser.
SG1 to P3 (Vol. Cont. at "Max".)	Closed 30080 ohms)	Open	Open R.F. choke, coupling reactor, either 3,200-ohm resistor or 16,000 ohm resistor.
P3 to either F6	Closed (7,680 ohms)	Open	Open R.F. choke, or one-half of coupling reactor.
P3 to G 5	Open	Closed 180 ohms)	Shorted .025 mfd. coupling condenser
P3 to G4	Open	Closed (15,180 ohms)	Shorted .025 mfd. condenser.

CANADIAN WESTINGHOUSE CO.

Model 71 & 81

ELECTRICAL DESCRIPTION OF CIRCUIT

A unit type of construction is used on Model 71; that is, the receiver and power parts are all built into a single unit. Numerous advantages are present in this type of construction. The gang condenser is mounted on one side of a center plate in a vertical position. The coils and Radiotron sockets are directly opposite on the other side of the center plate. This makes the leads from the sockets to the coils and to the gang condenser very short. Individual shields are placed over each Radiotron and coil and individual compartments over each unit of the gang condenser so that a very complete system of shielding is present. The heater type tubes are mounted in a horizontal position and the filament type in a vertical position. Mounting the heater type tubes in a horizontal position has no detrimental effect on their life, as the elements are rigid and held in place. However, it is important to mount the filament type tubes in a vertical position, as the elements may sag and short if mounted horizontally.

Examining the circuits we find the following functions taking place. See Figure 2.

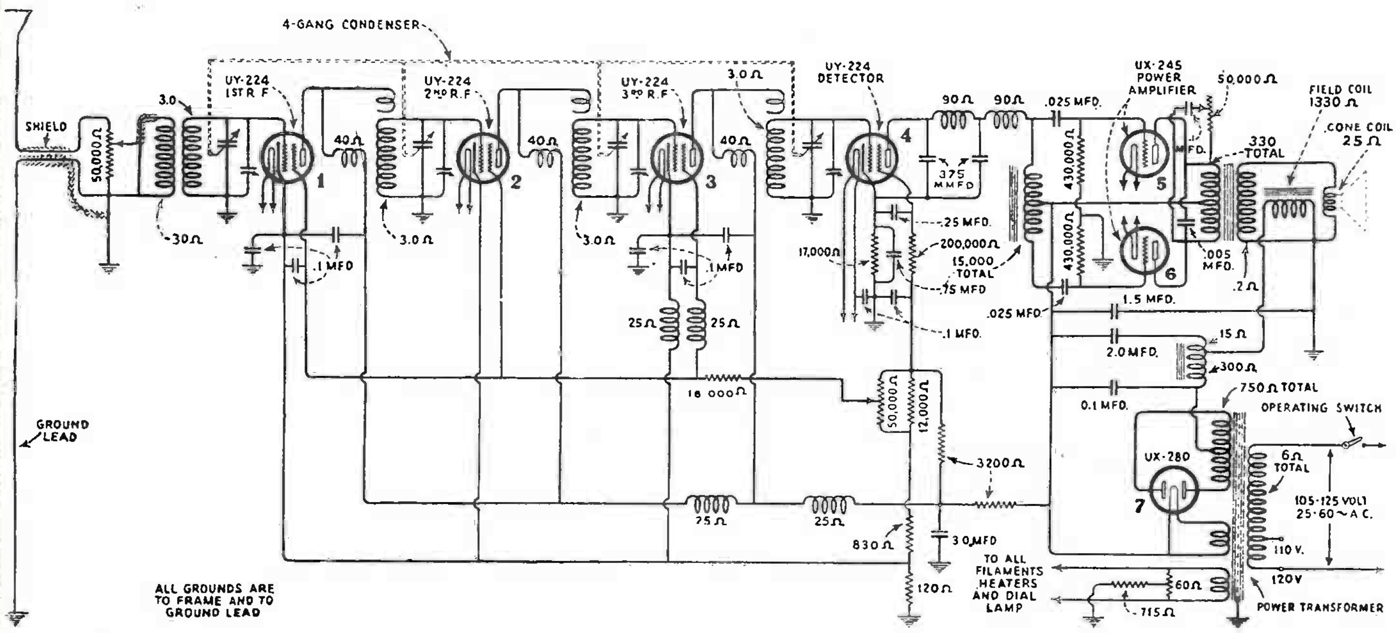

Fig. 2—Schematic Circuit Diagram

The antenna and ground are connected to each side of a 50,000-ohm potentiometer. The moving contact of the potentiometer is connected to one side of the primary of the first R.F. transformer, the other side being connected to ground. The action of this potentiometer constitutes one-half the action of the volume control, the other half being discussed later. The secondary of the R.F. transformer is connected to the grid circuit of the first R.F. Radiotron UY-224, which is tuned by the first unit of the gang condenser. The plate circuit of this tube contains a high impedance coil located inside the grid coil of the second R.F. transformer. This plate coil is of the correct impedance to match the UY-224 and is at right angles to the grid coil in which it is located. This is done so that the inductive coupling between these circuits is at a minimum. A single turn at one end of the grid coil is connected to the plate of the UY-224 and provides capacitive coupling between the circuits.

The reason for using capacitive instead of inductive coupling is due to the fact that the primaries of the R.F. transformer resonate at about 350 K.C. with receiver capacitance and tend to increase the sensitivity at the low end of the range. Capacitive coupling has less reactance to high frequencies than to low frequencies, thereby increasing the effective coupling at the high frequency end. A combination of the two gives about an equal gain throughout the tuning range.

The following two R.F. circuits function in the same manner as the one already described. The screen grid voltage of these three Radiotrons is varied by means of the second section of the volume control. This action occurring simultaneously with the variation of input voltage to the first tube gives a positive control of volume without distortion.

The detector circuit functions as a biased-grid, power detector operating at a high plate votage so that an output sufficient to swing the two Radiotrons UX 245 to maximum output is obtained. The detector tube is operated at 250 volts plate potential and 10 volts negative grid bias.

CANADIAN WESTINGHOUSE CO.

As the detector is a Radiotron UY-224 and must therefore work into a high impedance, a transformer would not be suitable for coupling it to the grid circuit of two Radiotrons UX-245. Impedance coupling is therefore used, one-half of a tapped reactor being in the plate circuit of the detector. This reactor is of quite high impedance and functions as an auto transformer. Two coupling condensers are used to pass the A.C. component of the detector output to the grid of the Radiotrons UX-245. Two high resistance units are used so that the proper grid bias may also be impressed on these tubes.

The output of the Radiotrons UX-245 is coupled to the cone coil of the electro-dynamic speaker through a center-tapped primary, step-down transformer.

A full wave rectifying circuit employing Radiotron UX-280 is used to provide the direct current voltages necessary for plate and grid supply to all Radiotrons and also for field current supply to the electro-dynamic loudspeaker. The filter circuit is of the type employed in the Super-Heterodyne models with the exception that a .1 mfd. condenser is used to by-pass any high frequency ripple that may be present in the rectified output. An explanation of the action of this filter follows.

Figure No. 2 shows the first stage of the filter having two condensers and a tapped reactor. The condensers function in the usual manner, acting as reservoirs to hold the current from one impulse to the next. The tapped reactor functions somewhat differently from the usual manner however. The D.C. current flows through one section of it, the other section being connected to a condenser. However, an A.C. voltage is present across the other section due to its transformer action similar to an auto transformer. This voltage is 180 degrees out of phase with the ripple voltage across the second condenser and to a large extent cancels out all ripple flowing from the tap to succeeding circuits. This results in the output of this section filter being substantially free from ripple. The field of the reproducer unit is connected in series with this output and further removes the slight ripple voltage remaining. The condensers are of ample capacity for proper filtering.

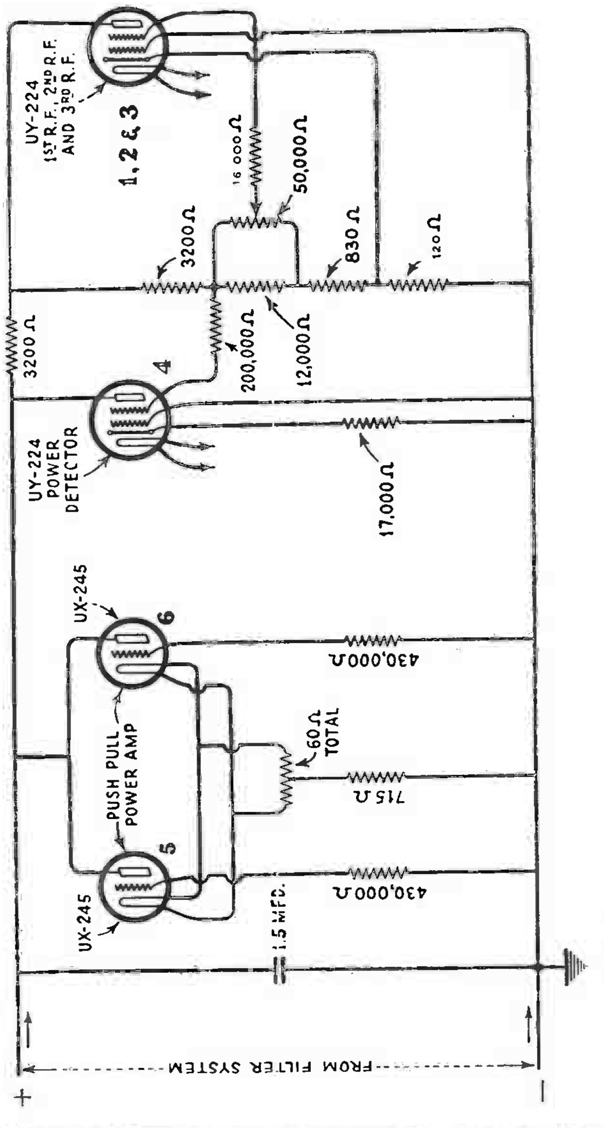

Schematic circuit of diagram of voltage supply system

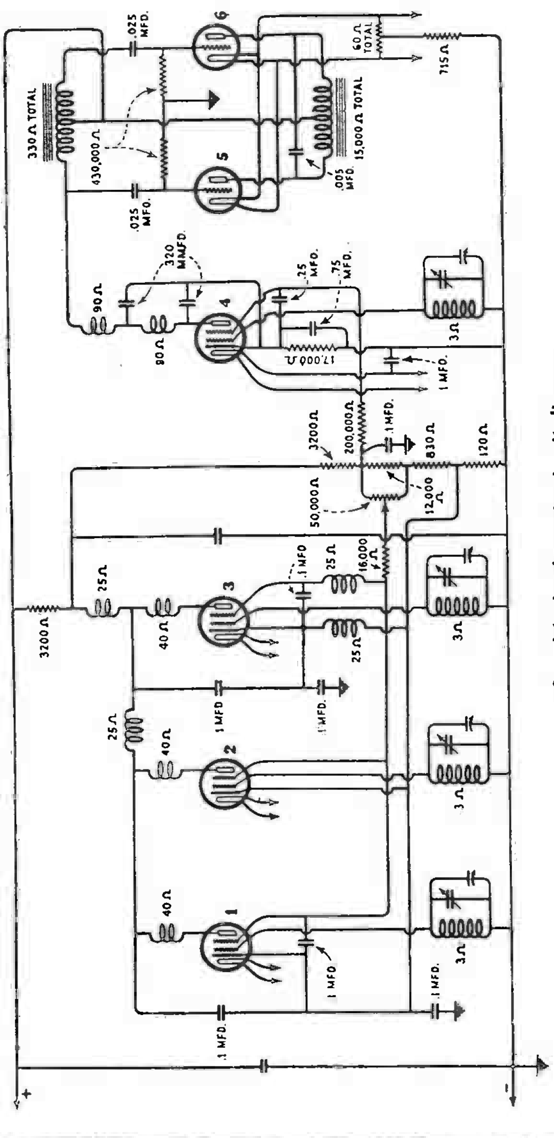

Simplified schematic circuit diagram

CANADIAN WESTINGHOUSE CO.

VOLTAGE READING SERVICE DATA CHARGE

Volume Control at Maximum

VOLTAGE CHARACTERISTICS	TUBE 1 1st R.F.				TUBE 2 2nd R.F.				TUBE 3 3rd R.F.				TUBE 4 DETECTOR				TUBE 6 POWER A.F.			TUBE 5 POWER A.F.			Cause of Incorrect Reading
	C.G. Volts	S.G. Volts	Plate Volts	Plate M.A.	C.G. Volts	S.G. Volts	Plate Volts	Plate M.A.	C.G. Volts	S.G. Volts	Plate Volts	Plate M.A.	C.G. Volts	S.G. Volts	Plate Volts	Plate M.A.	Grid Volts	Plate Volts	Plate M.A.	Grid Volts	Plate Volts	Plate M.A.	
Normal	3·0	95	180	3·0	3·3	95	180	3·0	3·3	95	180	3·0	7·5	23	210	1·0	6·0	210	27	6·0	210	27	
No. C.G. Voltage on Tube No. 1	0	80	150	6·0	....	....	....	....	....	....	....	....	....	....	....	....	....	....	....	....	....	....	Open Secondary of 1st R.F. Transformer
No. C. G. Voltage on Tube No. 2	....	....	....	....	0	80	150	6·0	....	....	....	....	....	....	....	....	....	....	....	....	....	....	Open Secondary of 2nd. R.F Transformer
No. C. G. Voltage on Tube No. 3	....	....	....	....	....	....	....	....	0	75	150	5·5	....	....	....	....	....	....	....	....	....	....	Open Secondary of 3rd R.F. Transformer
No C.G. Voltage on Tube No. 4	....	....	....	....	....	....	....	....	....	....	....	....	0	15	190	1·5	....	....	....	....	....	....	Open Secondary of 4th R.F. Transformer
No Plate Voltage on Tube No. 1	2·5	80	0	0	....	....	....	....	....	....	....	....	....	....	....	....	....	....	....	....	....	....	Open Primary of 2nd R.F. Transformer
No Plate Voltage on Tube No. 2	....	....	....	....	2·5	80	0	0	....	....	....	....	....	....	....	....	....	....	....	....	....	....	Open Primary of 3rd R.F. Transformer
No Plate Voltage on Tube No. 3	....	....	....	....	....	....	....	....	2·5	75	0	0	....	....	....	....	....	....	....	....	....	....	Open Primary of 4th R.F. Transformer
No Plate Voltage on Tube No. 4	....	....	....	....	....	....	....	....	....	....	....	....	3·5*	18*	0	0	....	....	....	....	....	....	Open Coupling Reactor or Detector R.F. Choke
No Plate Voltage on Tube No. 5	....	....	....	....	....	....	....	....	....	....	....	....	....	....	....	....	2·0	0	0	5·0	210	45	Open Primary of Output Transformer
No Plate Voltage on Tube No. 6	....	....	....	....	....	....	....	....	....	....	....	....	....	....	....	....	5·0	210	45	2·0	0	0	Open Primary of Output Transformer
No Plate Voltage on Tubes Nos. 1 and 2	2·3	60	0	0	2·0	60	0	0	2·0	60	175	1·5	6·0	12	175	1·5	....	....	....	....	....	....	Open R.F. Plate Supply Choke
No S.G. Voltage on Tube No. 3	2·5	100	155	4·5	2·5	100	155	4·5	2·5	0	165	0	6·5	60	210	1·0	....	....	....	....	....	....	Open S.G. R.F. Choke
No Voltages on Tube No. 3	2·5	80	170	3·0	2·5	100	165	5·0	18*	0	0	0	6·5	60	220	0·5	....	....	....	....	....	....	Open R.F. Choke Connected to Cathode of Tube No. 3
No Plate Voltages on Plates Nos. 1, 2 and 3	2·1	60	0	0	2·1	60	0	0	2·1	60	0	0	10	60	220	0·5	....	....	....	....	....	....	Open R.F. Plate Supply Choke
No C.G. Voltages on Tubes Nos. 1, 2 and 3	0	80	150	4·5	0	65	160	3·5	0	75	150	4·5	30	8·0	195	1·5	....	....	....	....	....	....	Shorted 0.1 Mfd. Condenser from Cathode No. 1 to Ground
No C.G. Voltages on Tubes Nos. 1, 2 and 3	0·4	75	150	3·5	0·4	70	160	3·0	0	80	155	4·5	30	2·0	185	1·5	....	....	....	....	....	....	Shorted 0.1 Mfd. Condenser from Cathode No. 3 to Ground
No S.G. Voltages on Tubes Nos. 1, 2 and 3	2·5	0	180	0	2·5	0	180	0	2·5	0	180	0	....	....	....	....	....	....	....	....	....	....	Shorted 0.1 Mfd. Condenser from S.G. No. 1 or 3 to Cathode
No Plate Voltages on Tubes Nos. 1, 2 and 3	7·0	1·0	0	0	7·5	1·0	0	0	8·0	0	0	0	0	1·0	175	0	....	....	....	....	....	....	Shorted 0.1 Mfd. Condenser from Plate No. 3 to Cathode
No Plate Voltages on Tubes Nos. 1, 2 and 3	7·0	1·0	0	0	7·0	1·0	0	0	7·0	1·0	0	0	0	1·0	175	0	....	....	....	....	....	....	Shorted 0.1 Mfd. Condenser from Plate No. 1 to Cathode
No C.G. Voltage on Tube No. 4	....	....	....	....	....	....	....	....	....	....	....	....	0	8·0	220	2·0	....	....	....	....	....	....	Shorted 0.75 Mfd. Condenser across Detector Bias Resistor
No S.G. Voltage on Tube No. 4	....	....	....	....	....	....	....	....	....	....	....	....	12	0	220	0·5	....	....	....	....	....	....	Shorted 0.25 Mfd. Condenser from S.G. to Cathode Tube No. 4
No C.G. or S.G. Voltages on Tubes Nos. 1, 2 and 3	0	0	110	0	0	0	110	0	0	0	110	0	0	0	200	0	....	....	....	....	....	....	Shorted 0.1 Mfd. Condenser from Ground to Volume Control
Low Plate and S.G. Voltages on Tubes Nos. 1, 2, 3, and 4	1·2	38	80	0·8	1·5	38	82	·8	1·4	30	80	1·5	4·5	9	105	0·5	0	115	58	0	115	58	Shorted 0.1 Mfd. Condenser from Ground to No. 4 Heater
No Voltages on Tube No. 4	2·8	60	170	0·75	3·0	50	160	1·4	2·8	60	165	3·8	20T	0	0	0	....	....	....	....	....	....	Open 17,000-Ohm Resistor
No S.G. Voltage or Plate M.A. on Tube No. 4	2·5	80	165	2·0	2·8	90	165	2·5	3·0	60	165	3·8	5·5	0	220	0	....	....	....	....	....	....	Open 200,000-Ohm Resistor
High C.G. and Low S.G. Volts on Tube No. 4	....	....	....	....	....	....	....	....	....	....	....	....	19	24	210	1·25	....	....	....	....	....	....	Open 12,000-Ohm Resistor Across Volume Control
No Voltages on Tubes Nos. 1, 2 and 3	0	0	0	0	0	0	0	0	0	0	0	0	0	0	260	0	....	....	....	....	....	....	Open 3,200-Ohm Section of Voltage Dividing Resistor
No C.G. or S.G. Voltages on Tubes Nos. 1, 2, 3 and 4	0	0	265	0	0	0	265	0	0	0	265	0	0	0	260	0	....	....	....	....	....	....	Open 3,200-Ohm S.G. Supply Resistor
High C.G. Voltages on Tube No. 4	2·6	65	170	1·1	2·6	83	165	2·5	2·8	60	165	4·0	16	50	210	1.2	....	....	....	....	....	....	Open S.G. Voltage Section of Volume Control
High C.G. Voltage on Tube No. 4	2·0	80	190	2·2	2·2	100	183	4·0	3·6	75	180	5·8	20	70	205	1·3	....	....	....	....	....	....	Open 830-Ohm Section of Voltage Dividing Resistor
Very High C.G. Voltage on Tubes Nos. 1, 2, and 3	255*	0	0	0	255*	0	0	0	255*	0	0	0	16	145	245	1·0	....	....	....	....	....	....	Open 120-Ohm Section of Voltage Dividing Resistor
No S.G. Voltage on Tubes Nos. 1, 2 and 3	1·8	0	195	0	1·8	0	195	0	1·8	0	195	0	7·4	85	230	0·5	....	....	....	....	....	....	Open Volume Control Arm or 12,000-Ohm Resistor
High Plate Current on Tube No. 5	....	....	....	....	....	....	....	....	....	....	....	....	....	....	....	....	0	150	70	6·0	150	0	Open 430,000-Ohm Resistor
High Plate Current on Tube No. 6	....	....	....	....	....	....	....	....	....	....	....	....	....	....	....	....	6·0	150	0	0	150	70	Open 430,000-Ohm Resistor
High Plate Current on Tube No. 5	....	....	....	....	....	....	....	....	....	....	....	....	....	....	....	....	+43	70	85	-8·0	80	0	Shorted .025 Mfd. Condenser
High Plate Current on Tube No. 6	....	....	....	....	....	....	....	....	....	....	....	....	....	....	....	....	-8	80	0	+43	70	85	Shorted .025 Mfd. Condenser

**Caused by meter connection. No voltage present in operation.*

CANADIAN WESTINGHOUSE CO.

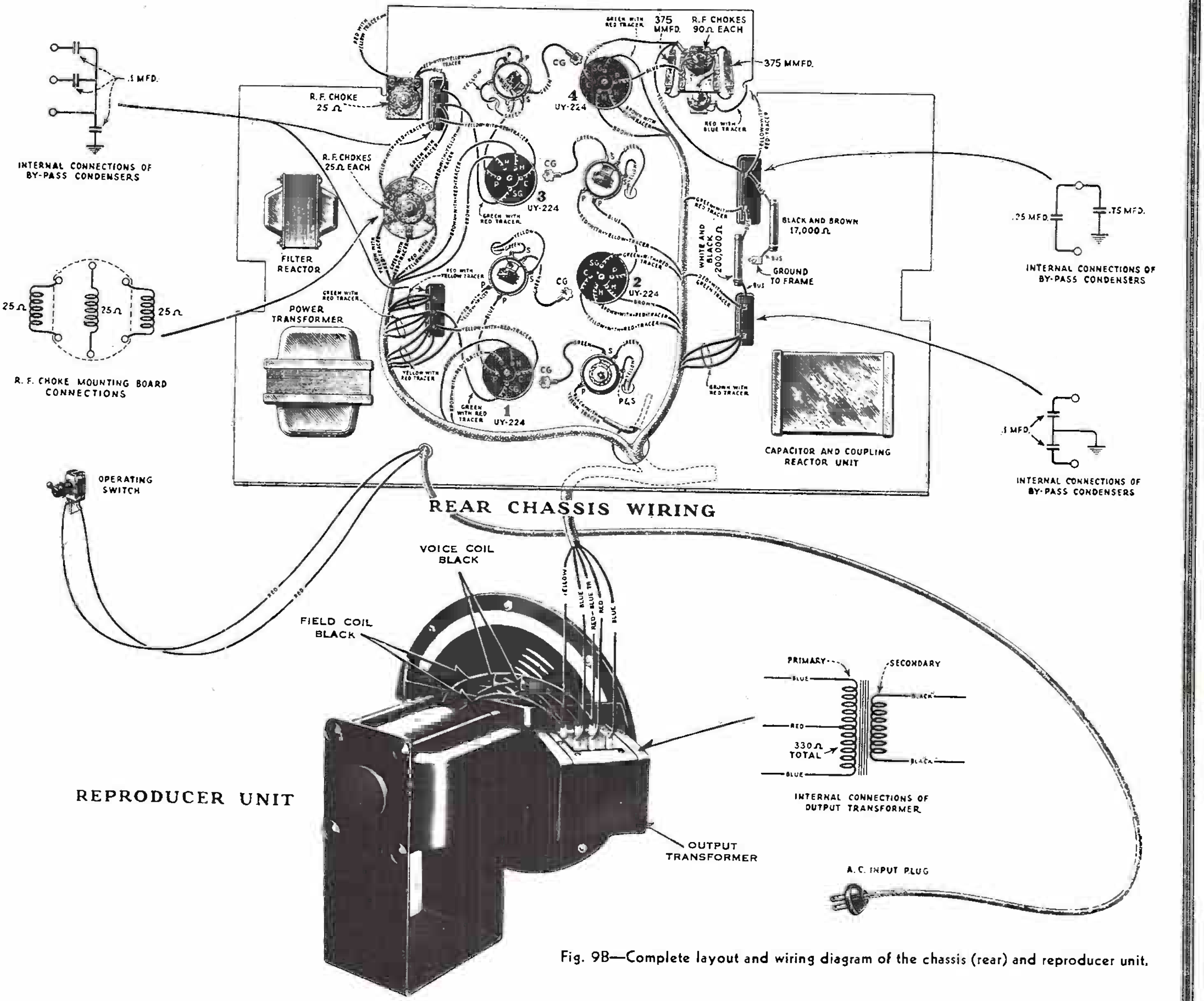

Fig. 9B—Complete layout and wiring diagram of the chassis (rear) and reproducer unit.

RADIOTRON SOCKET VOLTAGES—120-VOLT LINE

Tube No.	Cathode or Filament to Control Grid-Volts D.C.	Cathode to Screen Grid Volts D.C.	Cathode or Filament to Plate Volts D.C.	Plate Current M.A.	Screen Grid Current M.A.	Heater or Filament Volts
			Volume Control at Maximum			
1	—3.0	+95	180	3.0	0.9	2.3
2	—3.3	+95	180	3.0	0.7	2.3
3	—3.3	+95	180	3.0	0.8	2.3
4	—7.5	+23	210	1.0	0.3	2.3
5	*—6.0	—	210	27.0	—	2.3
6	*—6.0	—	210	27.0	—	2.3
			Volume Control at Minimum			
1	—2.0	+ 0	220	0	0	2.3
2	—2.2	+ 0	220	0	0	2.3
3	—2.2	+ 0	220	0	0	2.3
4	—8.4	+27	210	1.5	0.4	2.3
5	*—6.0	—	225	30.0	—	2.3
6	*—6.0	—	225	30.0	—	2.3

*Not true reading due to resistor in circuit.

CANADIAN WESTINGHOUSE CO.

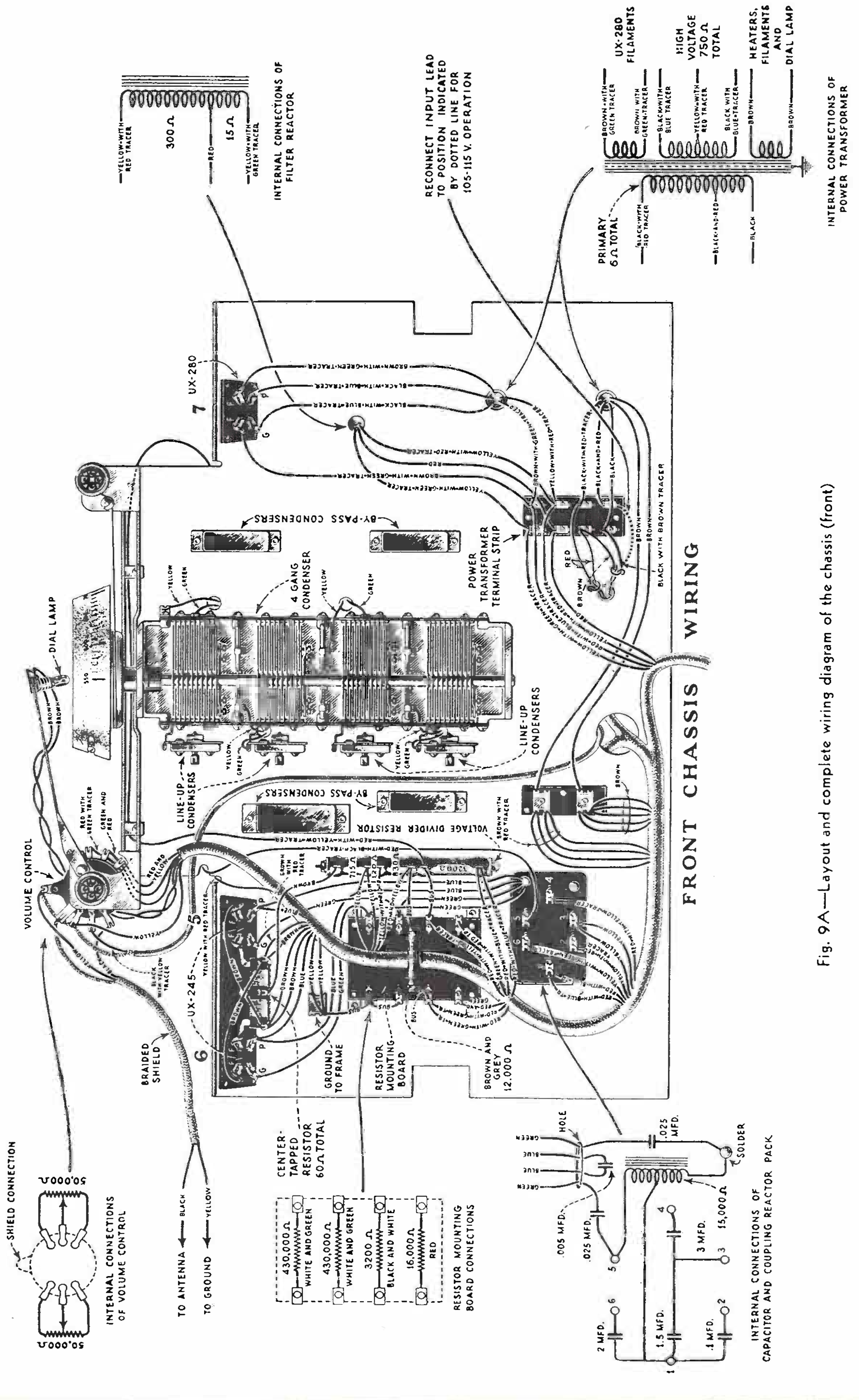

Fig. 9A—Layout and complete wiring diagram of the chassis (front)

CANADIAN WESTINGHOUSE CO.

(4) CONTINUITY TESTS

The following tests will show complete continuity for the receiver assembly of this instrument. Disconnect the antenna and ground leads, and the A.C. supply cord at its outlet.

A pair of headphones with at least 4½ volts in series, or a voltmeter with sufficient battery to give a good deflection when connected across the battery terminals, should be used in making these tests.

The resistance of the various circuits are shown in the column titled "Correct Effect". Checking the resistance of the circuits adds an additional check on their correct functioning. This may be done by means of a direct reading "Ohmmeter," a resistance bridge, the voltmeter-ammeter method or the method suggested in previous Service Notes.

Radiotron socket numbers used in making these tests are shown in Figures 9A and 9B. The schematic diagram, Figure 2, gives the values of the parts of the various circuits. Figure 8, the simplified schematic circuit diagram, is useful when making these tests.

Terminals	Correct Effect	Incorrect Effect	
		Indication	Caused By
Ant. lead to Ground lead (Vol. Cont. at "Min".)	Closed (50,000 ohms)	Open	Open section of volume control.
Ant. lead to ground lead (Vol. Cont. at "Max")	Closed (50,000 ohms)*	Closed (50,000 ohms)	Open primary of 1st R.F. transformer
C1 to Ground	Closed (120 ohms)	Open Short Closed (21 ohms)	Open 120-ohm section of voltage divider resistor. Shorted 0.1 mfd. condenser from C1 to Ground Shorted 0.1 mfd. condenser from C3 to Ground.
CG1 to Ground	Closed (3 ohms)	Open Short	Open secondary of 1st R.F. transformer Shorted 1st tuning or line-up condenser.
SG1 to C1, (Vol. Cont. at "Min".	Closed (16,830 ohms)	Open Short Closed (50 ohms)	Open 16,000-ohm resistor or 830-ohm section of voltage divider resistor. Shorted 0.1 mfd. condenser from SG1 to C1. Short 0.1 mfd. condenser from SG3 to C3.
SG1 tg SG2	Closed	Open	Open connection
C1 to C2	Closed	Open	Open connection
P1 to P2	Closed (80 ohms)	Open	Open primary of 2d or 3d R.F transformers or connections
P1 to Ground	Closed (14,000) ohms)	Open Closed (160 ohms) Closed (210 ohms) (Closed (54,240 ohms) Closed (16,240 ohms) Closed (90 ohms)	Open primary of 2d R.F. transformer R.F. choke, 3,200-ohm resistor, 12,000-ohm resistor and volume control, 830-ohm or 120-ohm section of voltage divider. Shorted 0.1 mfd. condenser from C1 to plate supply. Shorted 0.1 mfd. condenser from C3 to plate supply Open 12,000-ohm resistor across volvolume control. Open volume control. Shorted 1.0 mfd. condenser.
C2 to Ground	Closed* (120 ohms)	Open Short Closed (21 ohms)	Open 120-ohm section of voltage divider resistor. Shorted 0.1 mfd. condenser from C1 to Ground Shorted 0.1 mfd. condenser from C3 to Ground.
CG2 to Ground	Closed (3 ohms)	Open Short	Open secondary of 2d R.F. transformer Shorted 2d tuning or line-up Cond.
SG2 to C2 (Vol. Cont. at "Min".)	Closed (16,830 ohms)	Open Short Closed (50 ohms)	Open 16,000-ohm resistor or 830-ohms section of voltage divider resistor. Shorted 0.1 mfd. condenser from SG1 to C1. Shorted 0.1 mfd. condenser from SG3 to C3.
SG2 to SG3	Closed (25 ohms)	Open	Open R.F. Choke.
C2 to C3	Closed (25 ohms)	Open	Open R.F. Choke
P2 to P3	Closed (105 ohms)	Open	Open primary of 3d or 4th R.F. transformer or R.F. Choke.
P2 to Ground	Closed (14,000 ohms)	Open Closed (160 ohms) Closed (210 ohms) Closed (54,240 ohms) Closed (16,240 ohms) Closed (90 ohms)	Open primary of 3d R.F. transformer, R.F. Choke, 3.200-ohm resistor, 12,000-ohm resistor and volume control, 830-ohm or 120-ohm section of voltage divider. Shorted 0.1 mfd. condenser from C1 to plate supply. Shorted 0.1 mfd. condenser from C3 to plate supply. Open 12,000-ohm resistor across volume control. Open volume control. Shorted 1.0 mfd. condenser.
C3 to Ground	Closed (155 ohms)	Open Short Closed (21 ohms)	Open R.F. choke or 120-ohm section of voltage divider. Short 0.1 mfd. condenser from C3 to ground. Short 0.1 mfd. condenser from C1 to Ground.
CG3 to Ground	Closed (3 ohms)	Open Short	Open secondary of 3d R.F. transformer Shorted 3d tuning or line-up condenser.

*This may be higher on some sets due to the volume control arm not covering the full range of the resistance mit.

Terminals	Correct Effect	Incorrect Effect	
		Indication	Caused By
C4 to Ground	Closed (17,000 ohms)	Open Short	Open 17,000-ohm resistor. Shorted 0.75 mfd. condenser across 17,000-ohm resistor.
CG4 to Ground	Closed (3 ohms)	Open Short.	Open secondary of 4th R.F. transformer Shorted 4th tuning or line-up condenser
SG4 to SG2 (Vol. Cont. at "Max.")	Closed (216,000 ohms	Open	Open 200,000-ohm or 16,000-ohm resistor.
C4 to P4	Closed (41,707 ohms)	Short	Shorted 375 mmfd. condenser.
SG2 to P4 (Vol. Cont. at "Max".)	Closed 30080 ohms)	Open	Open R.F. choke, coupling reactor, either 3,200-ohm resistor or 16,000 ohm resistor.
P4 to either F7	Closed (7,680 ohms)	Open	Open R.F. choke, or one-half of coupling reactor.
P4 to G 5	Open	Closed 180 ohms)	Shorted .025 mfd. coupling condenser
P4 to G6	Open	Closed (15.180 ohms)	Shorted .025 mfd. condenser.
G5 to Ground	Closed (430,000 ohms)	Open	Open 430,000-ohm resistor.
G6 to Ground	Closed (430,000 ohms	Open	Open 430,000-ohm resistor
P5 to P6	Closed (330 ohms)	Open Short	Open primary of output transformer Shorted .005 mfd. condenser.
Across secondary of output transformer (cone coil disconnected)	Closed (.2 ohms)	Open	Open secondary of output transformer
Across cone Coil (Output transformer disconnected)	Closed (2.5 ohms)	Open	Open cone coil
SG3 to C3 (Vol. Cont. at "Min")	Closed (16,880 ohms)	Open Short Closed (50 ohms)	Open cathode or S.G. choke, 16,000-ohm resistor or 830-ohm section of voltage divider resistor. Shorted 0.1 mfd. condenser from C3 to SG3. Shorted 0.1 mfd. condenser from C1 to SG1.
SG3 to Terminal No. 2	Closed (16,025 ohms)	Open	Open R.F. choke or 16,000-ohm resistor.
P3 to Ground	Closed (13,940 ohms)	Open Closed (185 ohms) Closed (54,215 ohms) Closed (16,215 ohms) Closed (65 ohms)	Open primary of 4th R.F. transformer, R.F. choke, 3.200-ohm resistor and volume control, 830-ohm or 120-ohm section of voltage divider. Shorted 0.1 mfd. condenser from C3 to plate supply or from C1 to plate supply. Open 12,000-ohm resistor across volyume control. Open volume control. Shorted 1.0 mfd. condenser.
G7 to P7	Closed (750 ohms)	Open	Open high voltage winding of power transformer
G7 or P7 to Ground	Closed (2115 ohms)	Open	Open high voltage winding of power transformer, filter reactor or reproducer field coil.
Across F7 contacts	Closed Short	Open	Open UX-280 filament winding
Either side of filament contacts of sockets 1, 2, 3, 4, 5, or 6	Closed (745 ohms)	Open Short	Open 60-ohm center tapped resistor or 715-ohm bias resistor Shorted 0.1 mfd. condenser from heater to ground of Socket No. 4
Across AC.. input plug	Closed (6 ohms)	Open	Open primary of power transformer
Either F7 to Ground	Closed (17,350 ohms)	Open Closed (57,350 ohms) Closed (19,350 ohms) Closed (3,200 ohms) Closed (1,345 ohms) Closed (1,630 ohms) Short	Open either 3,200-ohm resistor, 12,000-ohm resistor and volume control, 830-or 120-ohm section of voltage divider. Open 12,000-ohm resistor across volume control. Open volume control. Shorted 1.0 mfd. condenser Shorted 2.0 mfd. condenser Shorted .1 mfd. condenser Shorted 1.5 mfd. filter condenser.
SG2 to F7 (Vol. Cont. in Max. Position)	Closed (22,400 ohms)	Open	Open 3,200-ohm resistor or 160,00 ohm resistor.

CANADIAN WESTINGHOUSE CO.

MODEL 101

THIS instrument is a ten-tube A.C. operated screen grid super-heterodyne radio receiver. Included in the same cabinet is an improved dynamic type reproducer unit which, together with the receiver, gives a quality of reproduction closely approaching the original. A feature of this set is the calibrated kilocycle dial. This dial is accurate as to the divisions on the scale and a station will always be received at its correct kilocycle marking on the dial. This greatly facilitates the location of stations of known frequency even though they have not been previously received.

One Westinghouse Radiotron UY-224 functions as an automatic volume control for the receiver. The manual volume control is used to set a definite level for the volume of sound from the reproducer unit and the automatic volume control radiotron maintains this output from the reeproducer unit practically constant. This feature compensates for the greater part of the "fading" encountered when listening to other than nearby stations. It also eliminates the necessity for constant re-adjustment of the manual volume control when tuning from one station to another and limits the volume of any burst of noise from some nearby source of electrical interference. One feature of the automatic volume control action that some times appears rather objectionable to the customer until he becomes accustomed to it, is the fact that while tuning between stations the static or electrical interference may rise in volume until it equals the intensity of sound that the manual control is set for. In tuning a station the station selector should be adjusted to the center of the signal where the signal proper is loudest and the interfering noises at minimum volume.

To minimize this objectionable noise between stations a "Quiet Tuning" Switch is provided. The normal position of this switch is at the "on" position. That is, turned to the extreme left. At this position the sensitivity of the receiver is greatly reduced though still sufficient for ordinary reception. The selectivity is decreased and the fidelity is better. With the switch at the "off" position, that is, turned to the extreme right, the sensitivity is greatly increased while the selectivity is increased to such a degree that a somewhat noticeable loss of the high frequency parts of the broadcast programmes occurs. Where interference is encountered on a particular station the switch should be turned to the right after the signal has been tuned in.

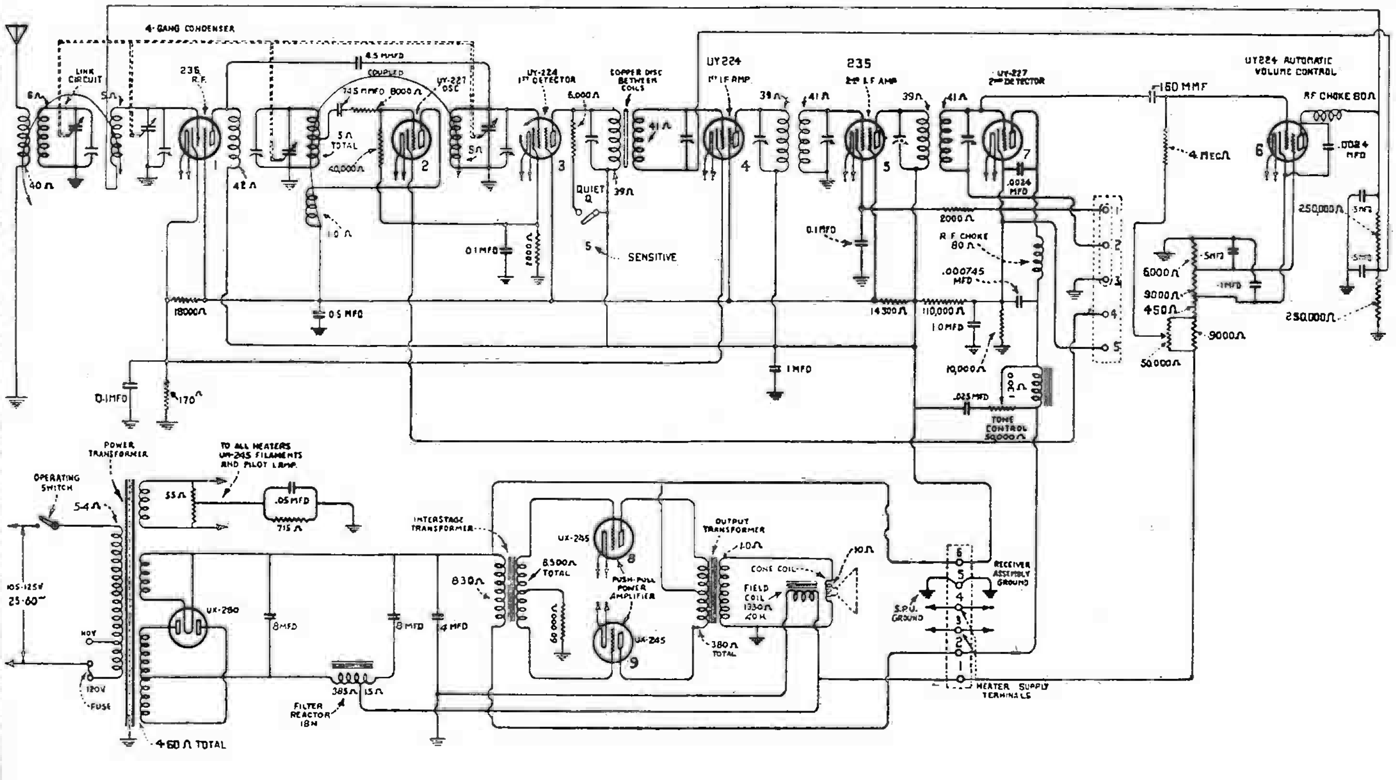

Fig. 2.—Schematic Circuit Diagram.

The Receiver Assembly schematic diagram is shown in Figure 2. Starting from the antenna circuit and following through each stage we find the following action taking place.

The antenna is coupled to a tuned link circuit by means of a high inductance concentrated coil connected from antenna to ground. The inductance is of a sufficient value that variations in the antenna system have but little effect on the tuning circuit.

The tuned circuit consists of a coil and condenser which tunes exactly with the tuned R.F. and first detector. The purpose of this circuit is to eliminate any cross modulation from stations to which the set is not tuned, or heterodyne whistles as far as possible, and to improve the selectivity of the receiver. There is no amplification gain in this circuit, it being merely a selection circuit.

A tuned Radio Frequency stage follows which uses a Westinghouse Radiotron 235. This stage gives about the same amplification as that obtained from two R.F. stages of an average good receiver. The output of this stage is coupled capacitively to the grid ciruit of the first detector or mixing tube by means of a small condenser. The plate circuit of the R.F. stage has a high inductance coil which provides a high impedance, into which it is necessary to have the tube work in order to get good amplification.

At this point the oscillator should be considered as its output is coupled also to the grid coil of the first detector. Its output, however, is inductively instead of capacitively coupled to this circuit. This is a tuned grid circuit oscillator using a Westinghouse Radiotron UY-227 and having a closely coupled plate coil, with sufficient feed back to provide stable operation. The grid circuit is tuned by a special section of the gang condenser, having less capacity than the other three sections, and by an oscillator coil which has considerably less inductance than the other radio frequency coils. The plates of the oscillator gang condenser section are so shaped that with the associated oscillator coil the frequency of the oscillations set up in this local circuit is always 175 kilocycles higher than the frequency to which the radio frequency circuits are tuned.

The next circuit to examine is the first detector. The circuit is tuned by means of one of the gang condensers to the frequency of the incoming signal. In the grid circuit there is present the incoming signal and the oscillator signal, the latter being at a 175 K.C. difference from the former. The first detector is biased so as to operate as a plate rectification detector and its purpose is to extract the difference or beat frequency, produced by combining the signal and oscillator frequencies. The beat frequency—175 K.C.—appears in the plate circuit of the first detector which is accurately tuned to 175 K.C. The tube used as a first detector is Westinghouse Radiotron UY-224.

The next two circuits are the first and second intermediate frequency stages which give a very high degree of amplification. The grid and plate circuits of both stages, as well as the plate circuit of the first detector and the grid circuit of the second detector are tuned to 175 kilocycles. A Westinghouse Radiotron UY-224 is used in the first intermediate stage and a Westinghouse Radiotron 235 in the second.

The second detector is a high-plate voltage, grid-biased type detector which gives sufficient output to drive two Westinghouse Radiotrons UX-245 connected in push-pull without an intermediate audio stage. The purpose of the second detector is to extract the audio frequency component of the R.F. signal which represents the voice or musical modulations produced in the studio of the broadcasting station. The audio component is extracted and used to drive the power tubes while the R.F. current is by-passed and not used any further.

The Westinghouse Radiotron 235 used in the radio frequency stage is of particular interest. This radiotron is similar in appearance and general characteristics to Radiotron UY-224. It has, however, considerably different characteristics as regards its operation with various amounts of grid bias. Over a comparatively narrow range of applied signal voltages, Radiotron UY-224 functions as a distortionless amplifier. If, however, this narrow range of voltages is exceeded by the application of a strong signal, distortion will occur. This is particularly noticeable when listening to a signal of only moderate strength on a broadcast channel, adjacent to a powerful local broadcast station. In this case, even though there are sufficient radio frequency stages to prevent the local broadcast signal from reaching the grid of the detector tube, the local signal may penetrate through one or two tuned circuits as far as the grid of the first radio frequency radiotron. If the first R.F. stage radiotron is a UY-224, it may be overloaded by the local signal, even when it is tuned to a more distant station on an adjacent channel. This overloading has the effect of allowing the local signal to distort the desired signal. The desired signal is then passed on in the usual manner in this distorted form and no amount of selectivity in further stages will eliminate this distortion. Radiotron 235 is designed to overcome this condition. It will operate at a distortionless radio frequency amplifier over a far wider range of signal voltages. Consequently the distortion of a desired signal by a nearby local signal (ordinarily called cross-modulation) does not occur. This characteristic also enables the variable grid bias method of volume control to be used.

The automatic volume control which is described in more detail in the discussion of the voltage supply system, consists of one Westinghouse Radiotron UY-224 the control grid of which is connected to the grid of the second detector through a small fixed condenser. In the plate circuit of this radiotron are two resistances. The voltage across these resistances is used as part of the grid bias voltage of the radio frequency and first intermediate frequency radiotrons. If, however, the intensity of the received signal increases, this increases the signal voltage on the grid of the second detector and the grid of the automatic volume control radiotron. This increase serves to increase the direct current flowing through the resistors in the plate circuit and increases the voltage drop across these resistors. This voltage, which is a part of the grid bias of the radio frequency and first intermediate frequency radiotrons, increases the grid bias on the latter two radiotrons and decreases their amplifying ability. This reaction of the signal intensity on the sensitivity of the receiver is such that the signal passed on to the audio amplifiers is almost constant.

The "Quiet Tuning" Switch which is described in the introduction acts when in the "on" position, to connect a 6000 ohm resistor across the primary of the first intermediate frequency transformer. This,

CANADIAN WESTINGHOUSE CO.

of course, decreases the sensitivity and selectivity of the receiver. The decrease in selectivity, however, eliminates the slight amount of "side-band cutting" which occurs when the switch is in the "off" position.

The tone control used is womehwat different from the ordinary type. It consists of a 50,000 ohm potentiometer, a 025 mfd. fixed condenser and a small audio frequency choke. These are connected in the second detector plate circuit as indicatsd in Figure 2.

With the control on at the extreme "right" position, the reactor is shorted and the full amount of the resistance is placed in series with the condenser thus giving the normal fidelity of the receiver. As the potentiometer arm is moved toward the extreme "left" position the choke and condenser both become effective and thus reduce the high frequency output of the receiver. The amount of this reduction is dependent on the position of the potentiometer arm operated by the tone control knob.

Service Data

(1) ANTENNA SYSTEM FAILURES.

A grating noise may be caused by a poor lead-in connection to the antenna, or the antenna touching some metallic surface such as the edge of a tin roof, drain pipe, etc. By disconnecting the antenna and ground leads the service man can soon determine whether the cause of complaint is within or external to the receiver and plan his service work accordingly.

(2) RADIOTRON SOCKETS AND PRONGS.

The tube sockets used in this set are of an improved type having a large contact surface and should require a minimum of service work. In order to get best results however, the tube prongs should be periodically cleaned, as dirty Radiotron prongs may cause noisy operation. Fine sandpaper may be used to clean them so as to insure a good contact surface. The use of emery cloth or steel wool is not recommended. Before re-inserting the Radiotrons in their sockets wipe the prongs and base carefully to make certain that all particles of sand are removed.

(3) BROKEN CONDENSER DRIVE CORD.

The gang condenser is driven from the station selector knob by means of a cord arrangement that also functions as a vernier control. This cord is of rugged construction and a spring is used to maintain an even tension at all times. Should the cord become disengaged from the drum or a new cord be required follow the arrangement indicated in Figure 4 for the correct position of the cord on the drum, otherwise the cord length will be incorrect or the stops on the shaft will engage at the wrong time. Cord length overall is 32¼ inches.

(4) EXCESSIVE HUM.

Excessive hum may be caused by:

(a) Defective Radiotron UX-280. Replace with one in known good condition.

(b) Defective filter reactor. A filter reactor with shorted turns, or one in which the center-tap has become open will cause hum in the loudspeaker.

(c) Open filter condenser. An open of any of the filter condensers will cause a hum to develop.

(d) Defective field coil in reproducer unit. As the field coil of the reproducer is a part of the rectifier filter, shorted turns or a grounded coil may cause hum. Any defective part must be repaired or replaced.

(e) Grounded or shorted by-pass condensers. Test all condensers and replace any condenser found defective.

(f) Defective center tapped resistance. A short of one section or an open in this resistance will cause a loud hum.

(g) Grounded filament lead. This may occur at the S.P.U. terminal strip due to the screw that holds the cover in place touching one filament lead.

(5) ACOUSTIC HOWL.

Acoustic howl may be caused by:

(a) Failure to remove shipping blocks. See Part I, Section 8 of this book.

(b) Defective rubber cushions. If the cushions on which the receiver chassis is supported have become aged or hardened, they should be replaced.

(c) Any defect in the support of the chassis that prevents it from being entirely supported by rubber may cause acoustic howl.

CANADIAN WESTINGHOUSE CO.

(d) Microphonic detector tube. A microphonic tube, while rare, in the detector socket may cause a howl. The remedy is to replace the tube or use it in another socket.

(6) LOW VOLUME.

Low volume may be caused by:

(a) Defective Radiotrons. Try interchanging all Radiotrons with others known to be in good condition.

(b) Poor antenna system. Install antenna as suggested in Part I, Section 1.

(c) Receiver not properly aligned. First—Replace the oscillator tube. Second—Adjust I.F. tuning condensers, and gang condenser as described in Part II, Section 10 and 11.

(d) Defective A.F. transformer. The A.F. transformers, the internal connections of which are shown in Figure 12, are in a metal container. All coils should be tested for continuity and if other defects are considered likely, the coils should be measured for D.C. resistance. Shorted turns may be disclosed by substituting an entirely new unit for the one in use.

(e) Low voltages from S.P.U. Measure all voltages and if low, replace tube (Radiotron UX-280), or any defective parts that are causing low voltages in S.P.U. Refer to Part III, Section 2.

(f) Open shorts, or grounds in receiver assembly. Test with continuity tests and make any repair or replacement necessary.

(g) Shorted field coil in reproducer unit. Any defect that reduces the strength of the magnetic field of the reproducer unit will reduce the output of the receiver. Check the current (85 M.A.) in the field and the voltage drop (110 volts) across it. An open field coil will cause the receiver to be inoperative.

(7) DISTORTED REPRODUCTION.

(Not due to failure in reproducer unit)

Distorted reproduction may be caused by any of the following:

(a) Radiotrons. A defective Radiotron will cause distortion and can be defective even though it lights. Defects other than heater or filament failures are checked only by substitution with a tube of known quality or by testing the tube.

(b) Defective A.F. transformers. An open in the secondary of the input transformer or shorted turns in any winding may cause distortion. Test by means of continuity or resistance measurement tests and make replacement if necessary.

(c) Oscillation in receiver assembly. Oscillation in the receiver assembly other than that of the oscillator will cause distortion to be experienced when tuning in a station. This distortion will be accompanied by a whistle when the station is tuned in. To remedy trouble of this character, refer to Part II, Section 9.

(d) Receiver improperly aligned. Improper alignment of the receiver in addition to affecting its sensitivity and selectivity, will cause distortion of any signal received. Realign the receiver as described in Part II, Sections 10 and 11.

(e) Incorrect tuning. If the receiver is not accurately tuned to the station being received, distortion will result. Follow the instructions given on the instructions accompanying each set when tuning.

(f) Heterodyne between stations too close in frequency. This is no defect in the receiver and, therefore, cannot be remedied except by shifting the frequencies of the transmitters.

(g) Strong local station. Turn "Quiet Tuning" switch to the left. Check R.F. and first I.F. tubes. Shorten antenna. Place a switch in antenna lead.

(h) Open by-pass condensers or connections. Any failure that will cause a by-pass condenser not to function will result in distortion. Repair or replace any such defect.

(i) Defect in Receiver Assembly or S.P.U. Check by means of continuity tests and make any replacement necessary.

(8) AUDIO HOWL

Audio howl may be caused by:

(a) Stations too close in frequency. This is a fault of the broadcasting stations and no fault of the receiver. Such a howl will be picked up on any type of receiver.

(b) Open by-pass condensers. An open of any of the by-pass condensers may cause an audio howl.

(c) Receiver Oscillation. An oscillating receiver will give a whistle when a station is tuned in. Apply the remedies suggested in Part II, Section 9.

(d) Defective Radiotrons in push-pull or detector stage. A defective Radiotron in the push-pull or detector stage may cause the receiver to develop a howl. Replace any defective Radiotron.

(e) Vibrating elements in the receiver Radiotrons. A gradually developed howl may be due to the loudspeaker causing the receiver Radiotron elements to vibrate. Apply the remedies given in Part II, Section 5.

(9) OSCILLATION.

Oscillation in the R.F. or I.F. stages may be due to:

(a) Failure of shielding of Radiotrons UY-224 or 235, or their control grid leads not in place. Make sure all shielding and leads are as originally intended. Any failure should be repaired.

(b) Open by-pass condensers in receiver assembly. Test and make any repair or replacement necessary.

(c) Lead from by-pass condenser not properly connected. A separate lead is brought out of the by-pass condenser case for the ground connection to the condenser that is connected to R.F. and I.F. plate voltage supply leads. While the condenser is still electrically in the circuit, If this lead is not connected, oscillation in the intermediate stages will result.

(d) Defective Radiotron UY-224 or 235 . A defective Radiotron UY-224 may cause oscillation and should be replaced by a Radiotron known to be in good operating condition.

(10) ADJUSTMENT OF I.F. TUNING CONDENSERS.

The first I.F. transformer—the one in the copper container—has its two windings very loosely coupled, this condition being further accentuated by having a copper shield placed between each winding, which makes possible very sharp tuning of this first I.F. stage unless the "Quiet Tuning" switch is in the "on" position and resistance is added to the circuit. The other two transformers have their windings closely coupled—overcoupled—so that a flat top effect is obtained in the tuning curve. The reason for discussing the I.F. curve is that this type of coupling has a bearing on the method to be used for lining up the I.F. transformers. The second and third transformers being over-coupled, their tuning condensers are adjusted until a plus or minus equal frequency shift of the I.F. oscillator frequency will give the same output and a flat top effect is obtained on the tuning curve. This is not the adjustment of the condensers that will give a maximum output and is a different procedure from that used in previous super-heterodyne receivers. The first transformers being loosely coupled the tuning condensers are adjusted for maximum output.

A detailed procedure for making these adjustments follows:

A modulated R.F. oscillator giving a signal at 175 K.C. and having a vernier condenser for shifting this frequency from 171 K.C. to 179 K.C. is necessary for aligning the I.F. stages of this set. The General Radio Co's. type 360 oscillator gives this frequency variation, but calibration of these secondary points must be made on instruments purchased prior to June 1, 1930. On these earlier models and on the older General Radio Type 320 oscillators to which the 175 K.C. frequency has been added, the General Radio Co. will add such calibrations, together with a 600 K.C. and 1400 K.C. calibration, at a nominal cost.

Westinghouse dealers will be able to secure a new AC operated Radio Service Oscillator (Style No. H25405) early in August 1931. This oscillator is recommended for the following adjustments.

A non-metallic screw driver ¼-inch in diameter is also necessary for making these adjustments. With the necessary equipment at hand, proceed as follows:

(a) Place the set in such a position that access to all mechanism is obtained. Place the receiver in normal operation with the volume control at maximum and then remove the oscillator tube. (Socket No. 2). Make sure a good ground connection has been made.

(b) Connect output meter in circuit. The meter leads of the Type 320 oscillator should be connected in series with lead No. 1 of the S.P.U. terminal strip. The output meter used on the Type 360 oscillator should be substituted for the cone coil of the reproducer unit and the switch on the oscillator set at "Dynamic."

(c) Place the oscillator in operation at 175 K.C. and connect the coupling lead to the control grid connection of the first detector Radiotron—(Socket No. 3). If excessive output is obtained reduce the oscillator output to cause an indication in the output meter without causing the needle to go beyond the scale.

(d) Now adjust the secondary and primary tuning condensers of the third, second and first I.F. transformers until maximum output is obtained.

CANADIAN WESTINGHOUSE CO.

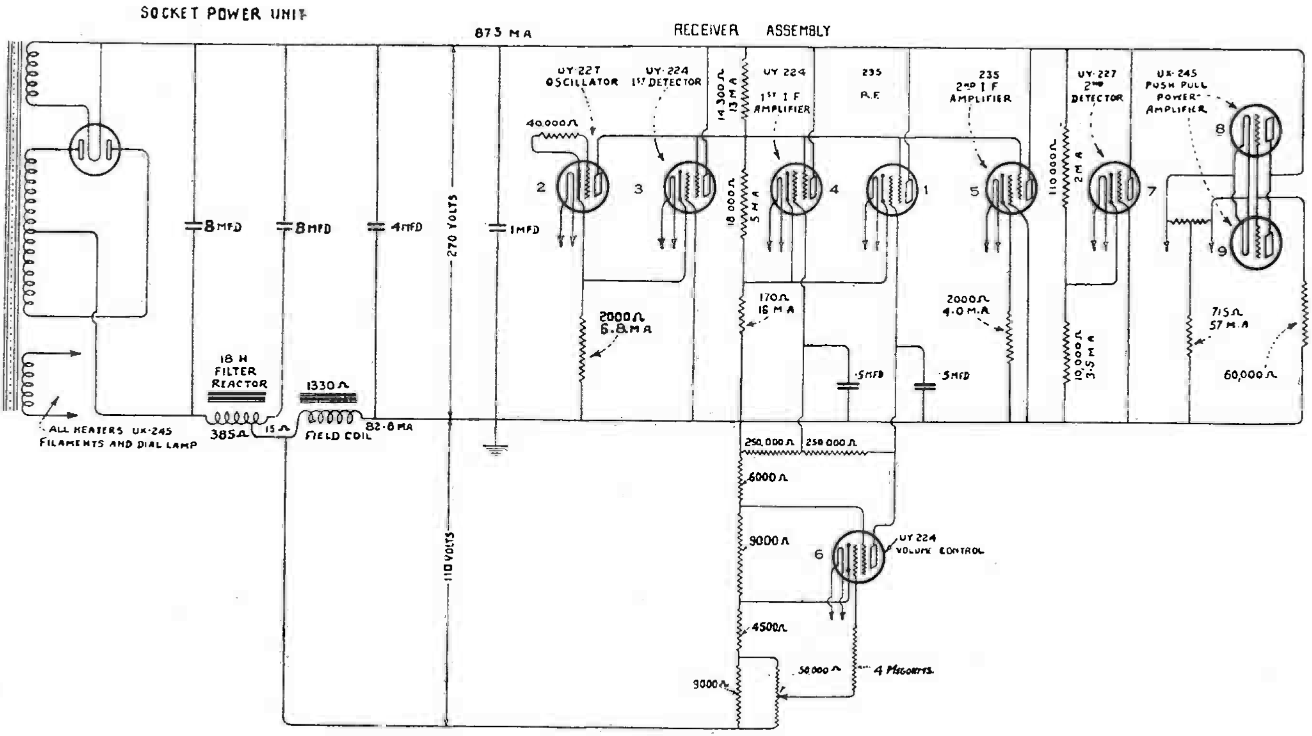

Fig. 8.—Voltage supply circuit

(e) Shift the coupling lead to the control grid connection of the second I.F. Radiotron (Socket No. 5). Adjust the oscillator output until a suitable reading is obtained in the output meter. Then adjust the secondary and the primary (See Figure 7) of the third I.F. transformer until a maximum reading is obtained in the output meter. After obtaining maximum output we know the two windings are closely adjusted to the same frequency. Now they must be readjusted until a flat top effect is obtained in the tuning curve. The flat portion should be at least 5 K.C. wide and generally will not exceed 7 K.C. in width. The method of doing this is to shift the oscillator frequency back and forth from 171 K.C. to 179 K.C. and noting, when the condensers are adjusted , that no appreciable change in output reading is obtained from 172.5 K.C. to 177.5 K.C. Also the drop in output should be the same at 171 K.C. and 179 K.C. This indicates that the flat top is centered at 175 K.C. The usual method to obtain this characteristic is, after adjusting to maximum output, to adjust the capacity of the secondary condenser until the flat top effect is obtained. It will probably not be centered at 175 K.C. It is, however, easy to shift its center point by increasing each condenser slightly to shift it to a lower frequency or decreasing both condensers slightly to increase its frequency. To make this adjustment the first time will be somewhat difficult, but after a little experience it is equally as easy as other super-heterodyne adjustments.

(f) After adjusting the third I.F. transormer, shift the coupling lead to the control grid connection of the 1st I.F. Radiotron and adjust the oscillator output so that too great an indication is not obtained in the output meter.

(g) Now adjust the secondary and primary condensers until maximum output is obtained. Then readjust in the same manner as with the third transformer until a flat top effect is obtained. This may not be quite as broad as the third transformer.

(h) Place the "Quiet Tuning" Switch in the "off" position. Then shift the coupling lead to the control grid connection of the first detector (Socket No. 3). Now adjust the oscillator output until the meter reading is not excessive and then adjust the secondary and primary of the 1st I.F. transformer condensers until maximum output is obtained. This transformer tunes very sharply and no further adjustments are necessary.

This completes the I.F. tuning adjustments and when so made, the set will perform at maximum efficiency. However, it is best at this point to check the gang condenser adjustments. The correct method of making this adjustment is given in Part II, Section 11.

(11) LINE-UP ADJUSTMENTS OF GANG CONDENSER.

The gang condenser used is of sturdy construction and little difficulty is apt to be encountered due to the gang condenser coming out of alignment but when adjustment is necessary the five vanes provided on the end plate of each section allow the gang condenser to be accurately aligned at six different test frequencies resulting in a practically perfect alignment over the broadcast range.

CANADIAN WESTINGHOUSE CO.

The following apparatus will be required.

1. A calibrated modulated oscillator covering the broadcast range.

2. A standard output meter of any one of the various types.

3. A dummy antenna either a standard General Radio type or the type illustrated in Radio Service Manual Section No. RS-103 on Westinghouse Models 90 and 110.

4. A small 4-40 socket wrench similar to that listed in Radio Renewal Parts Data under S No. H-23714 (or non-metallic screw driver).

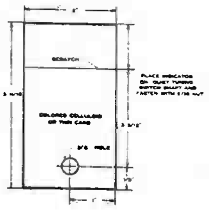

Fig. 9—Dial Indicator

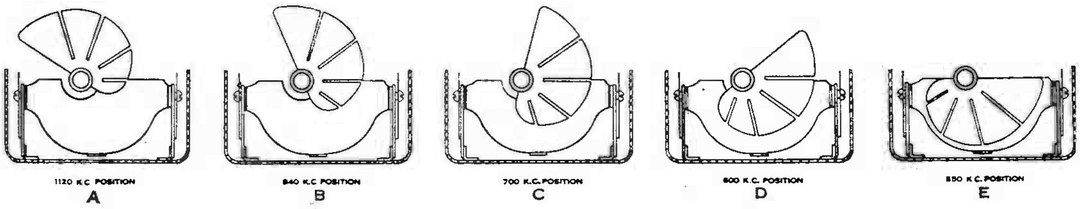

Fig. 10—Gang Condenser Adjustment Positions.

5. A single variable condenser having a maximum capacity of .0003 mfd. capacity or greater. This condenser should preferably have a metal shield or case and also should have a fairly low minimum capacity.

Proceed as follows:

(a) Remove the receiver assembly from the cabinet and place it in operation with the dummy antenna connected across the antenna and ground binding posts. The regular antenna should be disconnected but the receiver should be properly grounded. Turn the volume control to maximum and leave it there during the following adjustments:

(b) Connect the output meter in the standard manner to measure the output from the receiver.

(c) Place the modulated oscillator in operation and whenever necessary during the following adjustments adjust the coupling or output of the oscillator to give a readable deflection of the output meter without forcing it off scale.

(d) Place a dial indicator as illustrated in Figure 9 on the receiver assembly.

(e) Set the modulated oscillator at 1500 kilocycle and tune in the signal on the receiver. Note the number of kilocycles difference in reading between the modulated oscillator and the receiver dialing. Repeat this at the following five kilocycle settings of the modulated oscillator, 1300, 970, 750, 625, 550. Also note whether the receiver dial is off calibration by a constant distance at the six points. If there is a constant difference of calibration over the entire range or if all the differences between the modulated oscillator setting and the receiver dial setting are the same way (that is, if the oscillator kilocycle readings are either all higher or all lower than the corresponding receiver dial readings) adjust the position of the dial scale on the dial assembly or pilot lamp bracket to reduce the difference in modulated oscillator and receiver dial readings to a minimum value. If necessary to reduce the maximum difference in reading between the modulated oscillator and receiver dial adjust the dial scale until at some points the modulated oscillator frequency is higher than the receiver dial and at other points lower than the receiver dial.

(f) Unsolder the lead connected to the stator of the oscillator gang condenser section. Connect a lead from the grounded or shielded side of the external variable condenser to the receiver assembly frame. Bring a lead from the other binding post of the external variable condenser and leave it not connected but adjacent to the lead formerly connected to the oscillator gang condenser section. Place a small battery clip on the end of the lead which was formerly connected to the oscillator gang condenser section so that this lead may be clipped to its original position on the gang condenser or to the ungrounded lead from the external condenser.

(g) Connect the above mentioned clip to the ungrounded lead from the external variable condenser.

(h) Set the modulated oscillator and receiver dial both to 1500 kilocycles. Adjust the external variable condenser to give maximum reading of the output meter. If necessary increase the modulated oscillator coupling or output to secure a reading in the output meter. With the socket wrench adjust the trimming condensers on the first, second and fourth gang condenser sections to give maximum reading in the output meter.

(i) Leaving the gang condenser set in its last position move the clip from the external condenser lead to the stator of the oscillator gang condenser section. Adjust the trimming condenser on the third gang condenser section to secure a maximum reading in the output meter.

(j) Remove the clip from the third gang condenser section and clip on to the lead from the ex-

CANADIAN WESTINGHOUSE CO.

ternal condenser. Set both the modulated oscillator and the receiver dial to 1300 kilocycles. The first vane of the end plate of the gang condenser will now be in mesh with the stator plates. Adjust the first vane on gang condenser sections one, two and four to secure a maximum reading in the output meter, squeezing the vane in or out as may be required. If necessary to move the gang condenser away from the 1300 kilocycle setting return to the 1300 kilocycle setting and check the adjustments before proceeding further. Now leaving the gang condenser set at 1300 kilocycles place the clip lead on the third gang condenser stator and adjust the first vane on the oscillator gang condenser section to secure a maximum reading in the output meter.

(k) Follow the same procedure at 970 kilocycles, 750 kilocycles, 620 kilocycles and 550 kilocycles adjusting the second, third, fourth and fifth sets of vanes. It is not absolutely necessary, of course, to have the receiver dial scale calibrated exactly. In many cases it will be found easier to allow a tolerance of 10 kilocycles in the accuracy of the dial setting. After going through the complete adjustment once it is advisable to start at the beginning and recheck as the later adjustments may have upset the earlier ones.

(l) After all adjustments have been completed disconnect the external variable condenser and resolder the lead to the oscillator gang condenser section. If after placing the receiver assembly in the cabinet the calibration is not correct it may be found that the dial screen on the cabinet or the pilot lamp bracket will require slight adjustments.

(12) CENTERING CONE OF REPRODUCER UNIT.

To properly centre a new cone or one out of centre use the following procedure:

(1) Remove the socket power unit and reproducer from cabinet.

(2) Loosen centre screw of cone but do not remove it.

(3) Insert three carboard strips about the thickness of a visiting card 1½ x¼ in size through the centre web of the cone into the space between the pole pieces and the cone (Figure 14). This will give the cone coil the same clearance on all sides of the pole piece.

(4) Tighten the centre screw holding the web of the cone and remove the three strips. The cone is now properly centred.

(5) Test and if O.K. replace in cabinet.

(13) AUTOMATIC VOLUME CONTROL NOT WORKING PROPERLY.

If when the manual volume control is turned from maximum to minimum the output of the receiver does not decrease from maximum to zero there is some defect in the automatic volume control circuit. If the manual control has no effect whatsoever and the volume stays at maximum the automatic volume control radiotron may be defective or there may be an open or short of any of the component parts associated with the A.V.C. radiotron. Check with continuity test, Part III Section 5.

If the manual volume control only partially controls the volume of the received signal look for a defective A.V.C. radiotron, defective Radiotron 235 in the R.F. stage or defective UY-224 in the first I.F. stage. Also check to see if the Radiotron 235 in the second I.F. stage has been incorrectly interchanged with the Radiotron UY-224 in the first I.F. stage.

If the manual control operates satisfactorily but the receiver does not automatically compensate for "fading" look for an open circuited 160 mmf. coupling condenser.

Electrical Tests

(1) VOLTAGE SUPPLY SYSTEM.

Figure 8 illustrates the schematic diagram showing the voltage supply system and the values of current flowing in the different circuits, together with the values of the various resistors. It will be noted that the series method of voltages supply is used almost entirely, keeping the current drain on the rectifier tube at a minimum value.

Figure 8 also shows clearly the action of the automatic volume control. To operate the automatic control, approximately 100 volts is necessary. This voltage must be of such nature that the point of plate supply to the A.V.C. radiotron, is at the same potential as the minimum bias on the radiotrons whose grid voltages are controlled by the A.V.C., also the cathode of the A.V.C. radiotron, should be negative with respect to its plate. This is accomplished in the receiver, by utilizing the 110 volt drop across the field coil of the reproducer unit, which is connected in series with the negative D.C. supply lead. A voltage divider system is used across the field coil, consisting of 2—9,000 ohm 1—6,000 ohm and 1—450 ohm resistors, to secure the proper voltages for the operation of the A.V.C. radiotrons. It will be noted that the voltage from plate to cathode of the A.V.C. radiotron is derived from the voltage drop across the 6,000 and one 9,000 ohm resistors. The screen grid voltage for the A.V.C. is derived from the drop across one of the 9,000 ohm resistors. In series with the plate of the A.V.C.

CANADIAN WESTINGHOUSE CO.

there are two, 250,000 ohm resistors. The voltage drop across these resistors, will, of course, depend on the amount of current flowing through the plate circuit of the A.V.C. Referring to the Westinghouse Radiotron 235 in the R.F. stage, it will be noted that the control grid voltage for this radiotron, is secured from the voltage drop across the 170 ohm resistor, plus the voltage drop across both of the 250,000 ohm resistors. When no current is flowing through the plate circuit of the A.V.C. radiotron, the control grid voltage of the Westinghouse Radiotron 235 in the R.F. stage, consists only of the drop across the 170 ohm resistor, which is approximately 2½ volts. The control grid voltage for the Westinghouse UY-224, in the first intermediate frequency stage is derived in a similar manner, but consists only of the voltage drop across the 170 ohm resistor, plus the drop across one of the 250,000 ohm resistors. By means of a 50,000 ohm potentiometer, shunted across one of the 9,000 ohm resistors in the A.V.C. voltage divider system, the control grid of the A.V.C. radiotron is made more or less negative with respect to its cathode. This 50,000 ohm resistor forms the manual volume control.

When the manual volume control is set at any given point, there is normally a certain amount of voltage impressed between the control grid and cathode of the A.V.C. radiotron. This allows a certain amount of current to flow in the plate circuit of the radiotron and causes a definite amount of voltage drop across the 250,000 ohm resistors in the plate circuit. This adds a definite amount of bias voltage to the control grids of the radio frequency and first intermediate frequency amplifier radiotron.

The control grid of the A.V.C. radiotron is connected through a 160 mmf. condenser to the grid of the second detector radiotron. This condenser is not shown in Figure 8, but is shown in Figure 2.

When signal is tuned in, there is impressed on the second detector, a variable voltage corresponding to the received signal. This voltage, is applied to the 160 mmf. condenser on the control grid of the A.V.C. radiotron. (The four megohm resistor in the control grid circuit of the A.V.C. radiotron, serves to prevent this signal voltage being short circuited through the voltage divider system of the A.V.C.) The application of this signal voltage to the control grid of the A.V.C. radiotron, causes an increase in its plate current, a corresponding increase in the voltage drop across the two, 250,000 ohm resistors and a corresponding increase in the control grid voltages of the radio frequency and first intermediate frequency radiotrons. This increase in control grid voltages, of course, decreases the sensitivity of the receiver and decreases the magnitude of the signal voltage on the second detector grid. This reaction between signal voltage and receiver sensitivity is such that, while an actual increase in signal voltage on the grid of the second detector occurs when the received signal increases only a slight increase is necessary to cause a large decrease in receiver sensitivity. This increase in signal voltage on the second detector is so small that it is practically negligible and the signal appears to be almost constant in amplitude.

The reverse effect applies when the signal decreases in strength.

It should also be noted that the A.V.C. acts on the intermediate frequency signal voltage, which corresponds to the broadcast carrier signal voltage. It does not act on the audio frequency voltage and consequently has no appreciable tendency to "flatten out" the variations in the received program from loud to soft, where such variations are a natural part of the broadcast program.

It should further be noted that the two .5 mfd. condensers, acting as radio frequency by-passes across the two 250,000 ohm resistors are sufficiently large, that when once charged up to a certain voltage it takes them an appreciable fraction of a second to discharge their voltage, when the current through the 250,000 ohm resistors changes. This gives a slight time lag to the operation of the automatic volume control. This time lag is of assistance when tuning from one signal to another. While listening to one signal, the sensitivity of the receiver is naturally decreased due to the action of the A.V.C. If, now, the station selector is rotated quickly to the other signal desired, the sensitivity of the receiver has not time to rise between stations and the noise between stations is not so objectionable. This time lag, however, is not sufficient to allow any appreciable amount of "fading".

(2) VOLTAGE READINGS AT TERMINAL STRIP.

The following voltages are taken at the S.P.U. terminal strip with a D.C. and A.C. voltmeter. The D.C. meter should have a resistance of at least 1000 ohms per volt. Line voltage 120, fuse at 120-volt position, volume control at maximum.

Terminals	Volts
4 to 3	2.5 A.C.
1 to 5	110 D.C.
5 to 6	270 D.C.

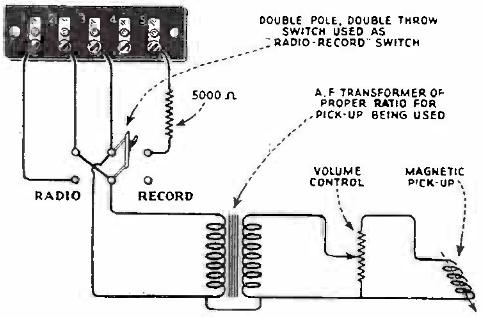

Fig. 5.—Magnetic Pick-up Connections.

CANADIAN WESTINGHOUSE CO.

(3)—METER READING SERVICE DATA CHART

ANTENNA AND GROUND SHORTED VOLUME CONTROL AT MAXIMUM QUIET TUNING SWITCH AT RIGHT—TONE CONTROL AT LEFT

VOLTAGE CHARACTERISTIC	TUBE 1 (R.F.)				TUBE 2 (osc)		TUBE 3 (1st DET)				TUBE 4 (I.F.)				TUBE 5 (I.F.)				TUBE 6 A.V.C.		TUBE 7 (2nd DET)			TUBE 8 (A.F.)			TUBE 9 (A.F.)			CAUSE OF INCORRECT READINGS
	C.G. Volts	S.G. Volts	Plate Volts	Plate M.A.	Plate Volts	Plate M.A.	C.G. Volts	S.G. Volts	Plate Volts	Plate M.A.	C.G. Volts	S.G. Volts	Plate Volts	Plate M.A.	C.G. Volts	S.G. Volts	Plate Volts	Plate M.A.	S.G. Volts	Plate M.A.	Grid Volts	Plate Volts	Plate M.A.	Grid Volts	Plate Volts	Plate M.A.	Gruid Volts	Plate Volts	Plate M.A.	
1 NORMAL	0	90	270	7·0	80	6·5	9·5	90	270	0	0	100	275	2·5	6·0	85	270	3·8	35	20	25	245	0	23	235	26	23	235	26	
2 High grid bias on tubes 1 and 3 (see also 33, 36, 37 & 41)	4·5	100	270	0	70	6·0	7·0	85	250	0	2	90	270	0					30	0										Open volume control
3 No C.G. voltage on R.F. tube (C.G. clip has no effect)	0	85	245	7·5																										Open grid coil of R.F. transformer
4 No plate voltage on R.F. tube	0	70	0	0																										Open plate winding of R.F. tube
5 High S.G. voltage	0	120	245	8·0	70	6·5	8·0	95	230	0	·5	120	250	3·0	6·5	90	240	3·5												Open 18,000-ohm resistor
6 No C.G. voltage on tube 3							0	70	235	4·0																				Open grid coil of 1st detector
7 No C.G. voltage on tube 4 (C.G. clip has no effect)											0	85	240	5·0																Open secondary of 1st I.F. transformer
8 No C.G. voltage on tube 5															0	65	230	5·0												Open secondary of 2nd I.F. transformer
9 No grid voltage on tube 7																			40	18	0	110	10							Open secondary of 3rd I.F. transformer
10 High S.G. voltage and no Osc. volts or M.A.	0	100	250	7·0	0	0	4·0	100	250	2·0	1·0	110	250	2·5	7·0	85	245	3·5												Open Osc. plate coil
11 No plate volts or M.A. on tube 3							4·0	90	0	0																				Open primary of 1st I.F. transformer
12 No plate volts or M.A. on tube 4											0	90	0	0																Open primary of 2nd I.F. transformer
13 No plate volts or M.A. on tube 5															5·0	80	0	0												Open primary of 3rd I.F. transformer
14 No plate volts or M.A. on tube 7																					16	0	0							Open 2nd Det. R.F. choke or primary of input trans.
15 No Osc. or 1st Det. plate volts or M.A.	0	110	250	7·5	0	0	8·0	0	0	0	·9	110	250	2·0	8·0	95	245	3·5												Open 2000-ohm Osc. and 1st Det. bias resistor
16 No voltages on tube 5															‡7·5	0	0	0												Open 2000-ohm 2nd I.F. bias resistor
17 No plate volts and high grid volts on tube 7																					185	0	0							Open 10,000-ohm 2nd Det. bias resistor
18 High 2nd Det. plate M.A.																					22	225	1·5							Open 110,000-ohm resistor
19 No S.G. volts on tubes 1, 2, 3, 4, & 5; high 2nd Det volts	0	0	300	0	0	0	0	0	300	0	0	0	300	0	0	0	300	0			27	275	·5							Open 14,300-ohm resistor
20 No C.G. or S.G. volts on tubes 1, 2, 3, 4 and 5	0	0	285	0	0	0	0	0	270	0	0	0	270	0	0	0	270	0												Shorted .5 mfd. condenser from S.G. supply to ground
21 No C.G. volts on tube 3					35	2·0	0	40	125	2·0																				Shorted .1 mfd. condenser from cathodes 2 and 3 to ground
22 No C.G. volts on tube 5															0	78	250	7·0												Shorted .1 mfd. condenser from cathode 5 to ground
23 All voltages low; no grid volts on tube 7	0	70	225	4·2	60	4·5	7·0	70	225	0	·3	80	225	1·7	4·0	65	220	2·5			0	170	24							Shorted 1.0 mfd. condenser from cathode 7 to ground
24 High grid and no plate volts on tube 7															4·0	60	225	·5			200	0	0							Shorted .0024 mfd. or 745 mmf.condenser from plate to cathode tube 7
25 Low voltages; no grid volts on tubes 9 and 8															1·8	45	120	1·0			10	110	0	0	125	50	0	125	50	Shorted .05 mfd. condenser across 715-ohm bias resistor
26 High voltages on tube 7																					38	340	1·0	140	180	1·0	140	180	1·0	Open 715-ohm or 60,000-ohm grid resistor in S.P.U.
27 High grid volts on tubes 9 and 8																								40	235	30	40	235	30	Shorted 60.000-ohm resistor
28 High plate current on tube 8																					20	180	0	0	135	75	26	155	0	Open one-half secondary of inter-stage transformer
29 High plate current on tube 9																					20	180	0	26	155	0	0	135	75	Open one-half secondary of inter-stage transformer
30 No plate voltage on tube 8																					28	260	0	27	0	0	27	280	38	Open one-half primary of output transformer
31 No plate voltage on tube 9																					28	260	0	27	280	38	27	0	0	Open one-half primary of output transformer
32 Low plate volts tube 7 (varies with tone control)																					22	190	0							Open tone control inductor
33 Very high grid bias on tube 1	20	95	275	0							2·0	100	275	0					35	0										Shorted .0024 mfd. condenser tube 6
34 No plate volts tube 6	0	80	250	5·0							·7	90	275	2·0					40	0										Open R.F. choke tube 6 or 250,000 ohm resistor
35 High plate volts tube 6	0	80	250	5·0							2·5	70	250	4·5					40	30										Shorted .5 mfd. condenser common point of 250,000 ohm resistors
36 Very high plate volts tube 6	2·5	80	250	5·0							·8	80	265	1·0					40	70										Shorted .5 mfd. condenser across 250,000 ohm resistors
37 Low plate volts tube 6	5·0	95	275	·2							1·5	9·5	275	0					45	12										Shorted .5 mfd. condenser across 6000 ohm resistor
38 No plate or S.G. volts tube 6	0	85	275	5·0							·5	90	270	2·0					0	0										Shorted .1 mfd. condenser across 9000 ohm resistor or open 450 ohm
39 Low S.G. volts tube 6	0	80	250	5·0							0	85	250	2·0					15	0										Open 9000 ohm resistor across volume control
40 Very high S.G. volts tube 6	3·0	95	275	0							2·0	95	275	0					100	0										Open 9000 ohm resistor 86 to S.G. 6
41 No S.G. volts tube 6	0	80	260	5·0							0	85	265	2·0					0	30										Open 6000 ohm resistor

CANADIAN WESTINGHOUSE CO.

(4) METER READINGS AT RADIOTRON SOCKETS.

The following readings taken at each radiotron socket with the receiver in operating condition should prove of value when checking with test sets such as the Weston Model 547 or others giving similar reading. The plate currents are not necessarily accurate for each tube as the cable in the test set will cause some circuits to oscillate due to its added capacity. Small variations of voltages will be caused by different tubes and line voltages. Considerable variation of some of the voltages will also be caused by a varying amount of received signal. Where two sets of readings are given the first reading is taken with the volume control at minimum setting. The second reading with the volume control at maximum setting, the "Quiet Tuning" switch at the "off" position and the antenna and ground binding posts short-circuited. The readings given are taken with 120 volts line voltage and the line fuse in the 120 volt position. The numbers in the first column indicate the tube socket numbers

Tube No.	Cathode or Filament to Control Grid Volts, D.C.		Cathode to Screen Grid Volts, D.C.		Cathode or Filament to Plate Volts, D.C.		Plate Current M.A.		Heater or Filament Volts	Screen Grid Current M.A.	
1	— 4.0*	0*	105	90	275	270	1.0	7.0	2.35	0	0.5
2	— 0	0	......	......	85	80	7.5	6.5	2.35	......	......
3	— 9.5	— 9.5	95	90	275	270	0	0	2.35	0	0
4	— 1.5*	0*	105	100	290	275	0	2.5	2.35	0	0.5
5	— 7.5	— 6.0	95	85	280	270	3.8	3.8	2.35	1.0	0.8
6	— 0*	0*	30	35	0*	20*	0	0	2.35	0.2	0
7	—25	—25	......	......	275	245	0	0	2.35	......	......
8 or 9	—25*	—23*	......	......	245	235	29	26	2.35	......	......

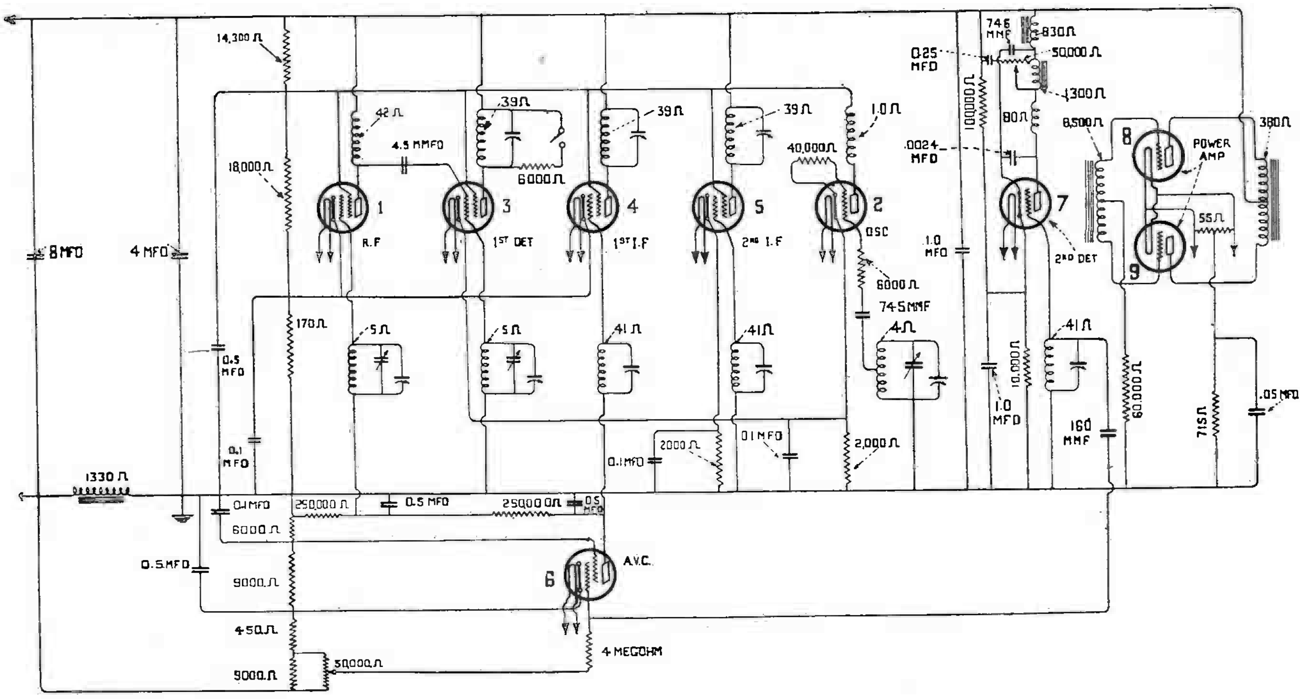

Fig. 11.—Continuity schematic diagram.

(5) CONTINUITY TEST.

The following tests will show complete continuity for the receiver assembly and socket power unit of this instrument. Disconnect the antenna and ground leads; the cable connections at the terminal strip of the S.P.U., and the A.C. supply cord at its outlet.

A pair of headphones with at least 4½ volts in series; or a voltmeter with sufficient battery to give a good deflection when connected across the battery terminals should be used in making these tests.

The resistance of the various circuits are shown in the column titled "Correct Effect". Checking the resistance of the circuits adds an additional check on their correct functioning. This may be done by means of a direct reading "Ohmmeter", a resistance bridge, the voltmeter ammeter method .

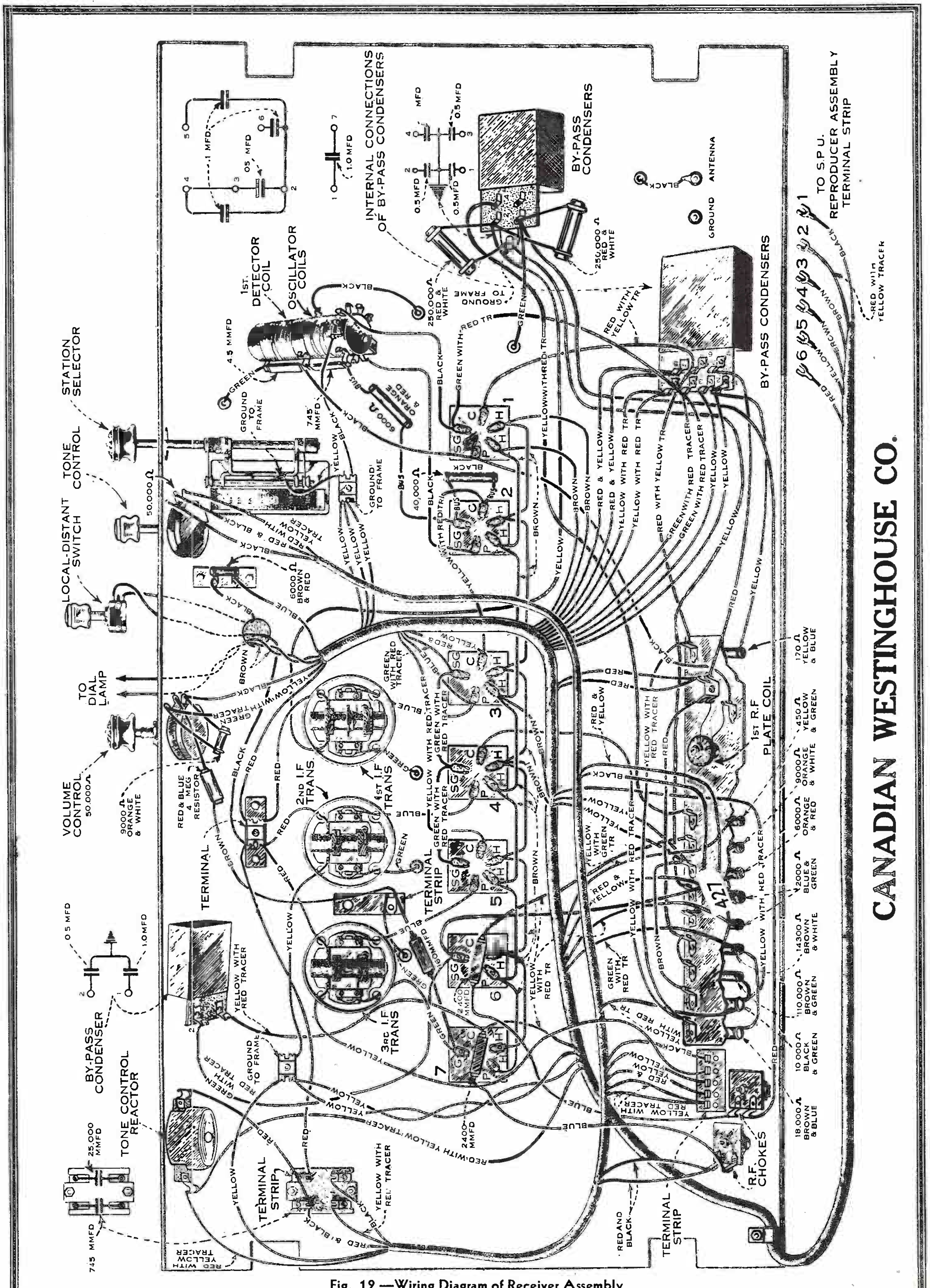

Fig. 12.—Wiring Diagram of Receiver Assembly

CANADIAN WESTINGHOUSE CO.

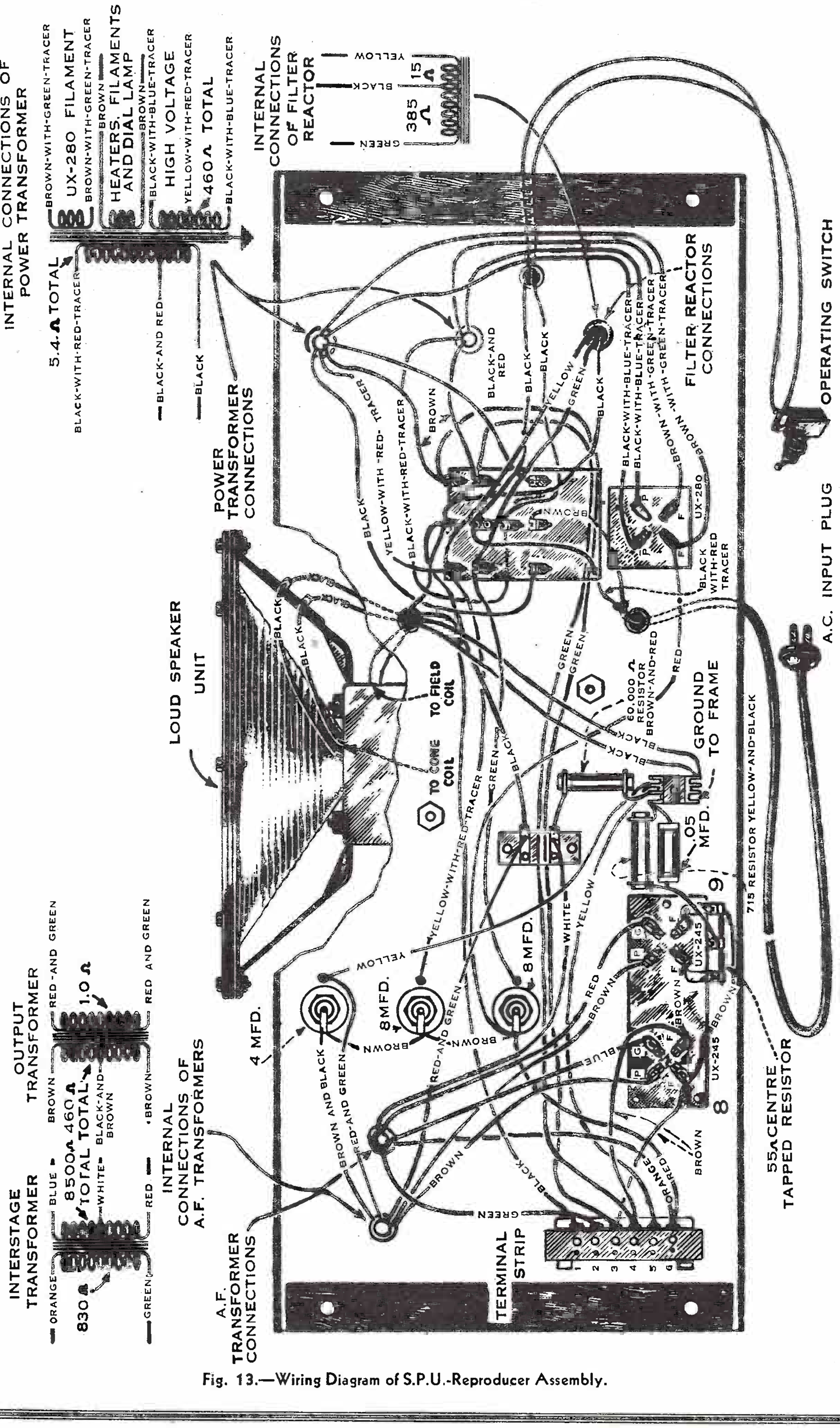

Fig. 13.—Wiring Diagram of S.P.U.-Reproducer Assembly.

CANADIAN WESTINGHOUSE CO.

RECEIVER ASSEMBLY CONTINUITY TESTS.

Terminals	Correct Effect	Incorrect Effect	
		Indication	Caused By
Ant. to Ground	Closed (40 ohms)	Open	Open antenna coupling coil
Stator tuning condenser No. 1 (See Figure 7) to Ground	Closed (5 ohms)	Open Short	Open link circuit coil Shorted link circuit tuning or trimming condenser
C1 and C4 to Ground	Closed (170 ohms)	Open Short	Open 170 ohm resistor Shorted .1 mfd. condenser
CG1 to Ground	Closed (500,000 ohms)	Open Short	Open R.F. grid coil or 250,000 ohm resistor Shorted .5 mfd. condenser
SG1, 3, 4, and 5 to Ground	Closed (16,000 ohms)	134,000 ohms 18,200 ohms 8,000 ohms Short	Open 170 or 18,000 ohm resistor Open 14,300, 110,000 or 10,000 ohm resistor Shorted 1.0 mfd. condenser Shorted .5 mfd. condenser.
P1 to Lug No. 6	Closed (42 ohms)	Open	Open R.F. plate coil
G2 to Ground	Closed (42,000 ohms)	(5,200 ohms) 40,000 ohms Open Short	Shorted 720 mmfd. condenser Shorted .1 mfd condenser Open 40,000 or 2000 phm resistor Grounded 6000 or 40,000 ohm resistor
P2 to SG1	Closed (1 ohm)	Open	Open oscillator plate coil
C2 and C3 to Ground	Closed (2000 ohms)	Open Short	Open 2000 ohm resistor Shorted .1 mfd. condenser
P3 to Lug No. 6	Closed (39 ohms)	Open Short	Open primary of 1st I.F. transformer Shorted 1st I.F. primary tuning condenser
CG4 to Ground	Closed (25000 ohms)	Open 41 ohms	Open secondary of 1st I.F. transformer or resistor Shorted .5 mfd. condenser
P4 to Lug 6	Closed (39 ohms)	Open Short	Open primary of 2nd I.F. transformer Shorted 2nd I.F. transformer tuning condenser
CG5 to Ground	Closed (41 ohms)	Open Short	Open secondary of 2nd I.F. transformer Shorted 2nd I.F. transformer tuning condenser
C5 to Ground	Closed (2000 ohms)	Open Short	Open 2000 ohm resistor Shorted .1 mfd. condenser
P5 to Lug No. 6	Closed (39 ohms)	Open Short	Open primary of 3rd I.F. transformer Shorted 3rd I.F. transformer primary tuning condenser

(6) TESTING FILTER AND BY-PASS CONDENSERS.

The by-pass condensers are in metal containers. The internal wiring diagram is shown in Figures 12 and 13.

The condensers can best be tested by charging them with approximately 200 volts D.C. and then noting their ability to hold the charge. After charging, short circuiting the condenser terminals with a screwdriver should produce a flash, the size of the flash depending on the capacity of the condenser and the voltage used for charging. A condenser that will not hold its charge, or a choke that clicks open is defective and requires replacement of the entire unit.

The electrolytic condensers can best be tested by measuring their leakage current with a low range milliammeter. To make this test disconnect the receiver from the line, first making sure that the voltage across terminals 4 to 5 of the S.P.U. is normal. Then remove all radiotrons except UX-280 and UX-245's. Connect the milliammeter in series with each electrolytic condenser in turn, by removing all wires from one terminal of the condenser and bridging the gap with the milliammeter. Short circuit the terminals of the milliammeter with a screw driver or equivalent while turning the operating switch "on". This supplies approximately 400 volt D.C. of correct polarity to the filter condensers. The leakage current of the 8 and 4 microfarad condensers should not be greater than 2 milliamperes and 1 milliampere respectively.

(7) CHECKING RESISTANCE VALUES.

The values of the various resistance units in this receiver are shown in the schematic diagrams Figures 2 and 11. When testing a receiver for defects the various values of resistance should be checked. This may be done by a resistance bridge; the voltmeter-ammeter method, or by the following method.

CANADIAN WESTINGHOUSE CO.

RECEIVER ASSEMBLY CONTINUITY TESTS—Continued

Terminals	Correct Effect	Incorrect Effect	
		Indication	Caused by
G7 to Ground	Closed (41 ohms)	Open	Open secondary of 3rd I.F. transformer or link on terminal board
C7 to P7	Open	Closed	Shorted .0024 mfd. condenser
P7 to Lug No. 2 (Tone control at "right")	Closed (1100 ohms)	Open	Open R.F. choke coil
Lug No. 4 to one heater contact of all sockets. Remove dial lamp)	Closed	Open	Open heater connection
Lug No. 3 to other heater contact of all sockets. (Remove dial lamp)	Closed	Open	Open heater connection
CG6 to Ground Vol. Control at "Min"	Closed 4 megs	Open Short	Open 4 meg. resistor Shorted 160 mmf. condenser.
C6 to Ground	Closed 15,000 ohms	Open 6,000 Short	Open 6,000 or 9,000 ohm resistor Shorted .5 mfd. condenser Shorted .1 mfd. condenser
SG6 to Ground	Closed 6,000 ohms	Open Short	Open 6000 ohm resistor Shorted .5 mfd. condenser
P6 to Ground	Closed 500,000 ohms	Open 250,000 ohms 80 ohms Short	Open R.F. choke or 250,000 ohm resistor Shorted .5 mfd. condenser Shorted .5 mfd. condenser Shorted .0024 mfd. condenser
Lug No. 1 to Ground	Closed 23,100 ohms	Open 8,100 ohms 17,100 ohms	Open 6000, 9000 or 450 ohm resistor Shorted .1 mfd. condenser Shorted .5 mfd. condenser

S.P.U. REPRODUCER CONTINUITY TESTS

(Disconnect all electrolytic condensers before making these tests)

Across filament contacts of sockets 8 or 9	Closed (0.5 ohms)	Open 55 ohms	Open filament winding and center tapped resistor Open filament winding
Either filament contact of sockets 8 or 9 to Ground	Closed (715 ohm)	Open Short	Open UX-245 grid bias resistor Shorted .05 mfd. condenser
G8 to G9	Closed (8,500 ohms)	Open	Open secondary of push-pull input transformer
G8 or G9 to Ground	Closed (64,300 ohms)	Open	Open secondary of push-pull input transformer or 60,000 ohm resistor
Terminal 2 to Terminal 6	Closed (830 ohms)	Open	Open primary of push-pull input transformer
P8 to P9	Closed (380 ohms)	Open	Open primary of output transformer
P8 or P9 to Terminal No. 6	Closed (190 ohms)	Open	Open primary of output transformer or center tap connection
Across cone coil (unsolder leads)	Closed (10 ohms)	Open	Open cone coil
Across output leads to terminal strip (cone coil disconnected)	Closed (1.0 ohms)	Open	Open secondary of output transformer
Across UX-280 filament contacts	Closed	Open	Open UX-280 filament winding
P to P of UX-280 socket	Closed (460 ohms)	Open	Open high voltages winding of power transformer
Either P of UX-280 socket to Ground	Closed (2000 ohms)	Open	Open high voltage winding of power transformer, filter reactor or field of reproducer unit
Across A.C. input plug	Closed (5.4 ohms) (Operating switch "on")	Open	Open primary of power transformer or fuse

CANADIAN WESTINGHOUSE CO.

(8) CALIBRATION OF R.F. AND I. F. OSCILLATORS.

In servicing this receiver it is essential that the frequency of the I.F. and R.F. oscillator used for making adjustments be accurately known. Even with the best of material and construction oscillators will shift their frequency and a periodic check is both desirable and necessary.

For resistances of low value, 5000 ohms or less, use a voltmeter having a resistance not greater than 100 ohms per volt. For high values of resistance use a meter of 1000 ohms or more per volt. The Weston Meters, Type 301 or 280, each have a resistance of 62 ohms per volt and are satisfactory for the low values. Use sufficient battery to give a good deflection on the meter, for example, a 45-volt "B" battery for a 0-50 volt meter. Take two readings, one of the battery alone, and one of the battery with the unknown resistance in series. Then apply the following formula.

$$\left\{ \frac{\text{Reading obtained of battery alone}}{\text{Reading obtained with resistance in series}} - 1 \right\} \begin{array}{l}\text{Resistance}\\ \text{of Meter}\end{array} = \begin{array}{l}\text{Unknown}\\ \text{Resistance}\end{array}$$

SERVICE DATA CHART

Before using the following Service Data Chart, when experiencing no reception, low volume, poor quality, noisy or intermittent reception, howling and fading, first look for defective tubes, or a poor antenna system. If imperfect operation is not due to these causes the "Service Data Chart" should be consulted for further detailed causes. Reference to the text should be made for further details.

Indication	Cause	Remedy
No Reception	No current at outlet	Turn line current "On"
	Defective operating switch	Repair or replace operating switch
	Blown fuse	Repair cause of blown fuse and replace
	Defective parts in S.P.U.	Test and repair any defective parts
	Defective parts in receiver assembly	Test and repair any defective parts
	Open field coil of reproducer	Repair or replace open field coil
	Open cone coil of reproducer	Replace defective cone
Low Volume	Low voltage from S.P.U.	Repair any cause of low voltage
	Defective socket power unit	Repair or replace any defective part in S.P.U.
	Defective receiver assembly	Repair or replace any defect in receiver assembly
	Poor antenna system	Install antenna system as suggested on instruction card
	I.F. transformers not properly aligned	Align I.F. transformers correctly
	Gang condensers not properly aligned	Align gang condenser correctly
	Shorted field coil of reproducer unit	Repair any defect in reproducer
A.V.C. does not hold volume constant.	160 mmf condenser open	Replace condenser
Manual volume control does not control	Defective A.V.C. UY-224	Replace UY-224
	I.F. radiotrons in wrong sockets	Locate radiotrons correctly
	Defect in A.V.C. circuit	Check with continuity test and correct
	Defective volume control	Replace volume control
Poor Quality	Receiver not properly tuned	Tune receiver correctly when receiving stations
	Defective A.F. transformer	Replace defective transformer
	Defective tone control parts	Replace defective tone control parts
	Receiver improperly aligned	Align receiver correctly
	Defective or grounded 60,000-ohm resistor in S.P.U.	Replace defective resistor or repair ground
Howling	Shipping blocks not removed	Remove shipping blocks from receiver assembly
	Defective rubber cushions	Replace any aged or hardened rubber cushions
	Radiotrons	Check radiotrons used in detector and push-pull sockets
Hum	Defective radiotron UX-280	Replace defective radiotron
	Defective part in S.P.U.	Replace defective part
	Grounded heater lead	Repair any ground in heater leads
	Defective field coil	Repair or replace field coil
Dial reads incorrectly	Dial screen not in position	Readjust dial screen at low frequency end of scale
	Dial lamp bracket bent	Bend dial lamp bracket back to normal
	Set not properly aligned	Align set correctly
	Oscillator used for aligning not calibrated correctly	Calibrate oscillator accurately

CANADIAN WESTINGHOUSE CO.

An easy way to check the frequency of the I.F. oscillator is to check its fourth harmonic against the station operating at that harmonic frequency. In the case of the 175 K.C. oscillator used for this receiver the broadcasting station operating on this fourth harmonic frequency would be W.L.W. operating at 700 K.C. The check is best made by tuning in the station accurately on a radio receiver and then setting the oscillator in operation coupled to the receiver antenna sufficiently so that it will be heard. As the I.F. oscillator is adjusted a squeal or beat note will be heard, as the fourth harmonic approaches or recedes from the frequency of W.L.W. Adjust the oscillator until this heterodyne or beat note is at its lowest pitch (or zero heat). At this point both the transmitting station and the harmonic of the oscillator are at the same frequency. The oscillator will then be set at 175 K.C.

An interesting point in connection with this check is that the eighth harmonic of 175 K.C. is 1400 K.C. This check on the I.F. frequency will therefore serve as an additional check on the 1400 K.C. position by tuning in this harmonic on a receiver.

R.F. Oscillators

The R.F. oscillator may be calibrated in the same manner as the I.F. oscillator with the exception that its fundamental frequency should beat against numerous broadcasting stations and a curve be plotted so that all frequencies will be known. Such a curve is shown in Figure 15. A step by step procedure for making such a calibration folllows:

1. Tune in a station with the receiver at the high frequency end of the scale.

2. Place the oscillator to be calibrated in operation and couple it to the antenna system of the receiver.

3. Adjust the dial of the oscillator until its signal is heard at maximum intensity in the receiver or zero beat is obtained with the broadcasting station. Note the reading of this position on the oscillator dial and plot this position on the chart shown in Figure 16. The vertical divisions represent frequency and the horizontal divisions, the oscillator scale readings.

4. Now repeat this procedure at a station slightly lower in frequency and plot this point on the chart.

5. As many stations as possible, tuned in at various positions throughout the dial scale, should be checked by this method, and after all points have been located on the chart, the points should be connected by means of a line. This line will represent the calibration of the oscillator.

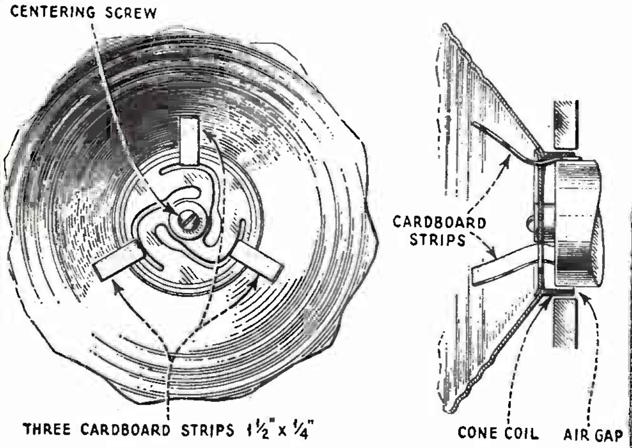

Fig. 14.—Centering Cone.

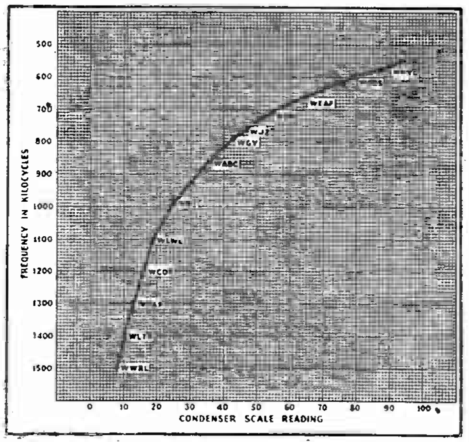

Fig. 15.—R.F. Oscillator Calibration Curve.

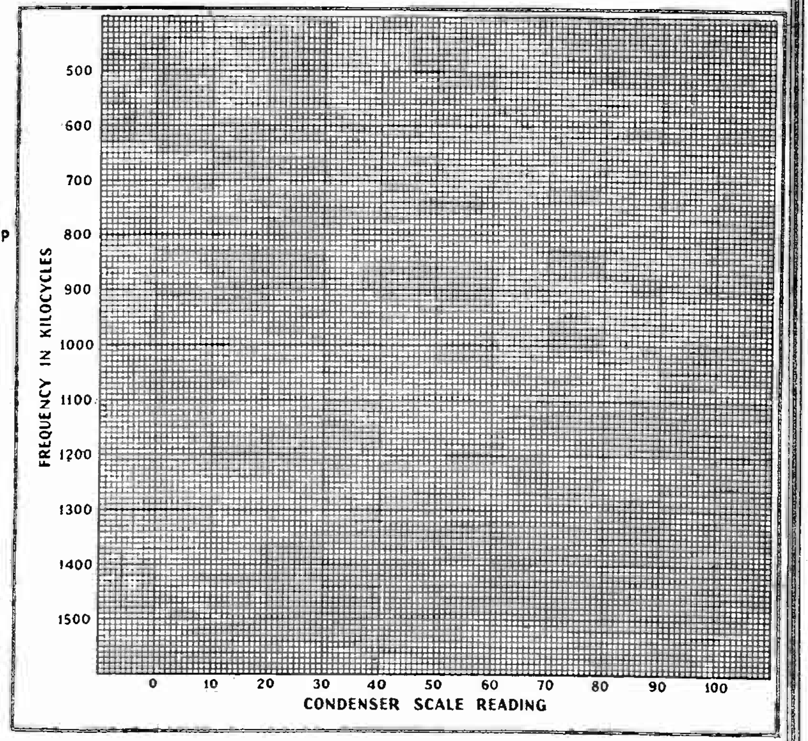

Fig. 16.—Chart For Plotting R.F. Oscillator Calibration Curve.

CANADIAN WESTINGHOUSE CO.

Westinghouse Model 801 is a compact radio receiver employing the super-heterodyne circuit. The inherent sensitivity, selectivity and tone quality of the super-heterodyne is a feature of this receiver. The unit type of construction is used (both S.P.U. and receiver assembly incorporated in the same chassis) which together with the reproducer unit results in a compact receiver of excellent performance. The entire mechanism is enclosed in a cabinet of pleasing design. Figure 2 shows a rear interior view.

Two Westinghouse Radiotrons UY-227, two Westinghouse Radiotrons 235, two Westinghouse Radiotrons UX-245, one Westinghouse Radiotron UY-224 and one Westinghouse Radiotron UX-280 are used. The Radiotrons are shipped in their respective sockets.

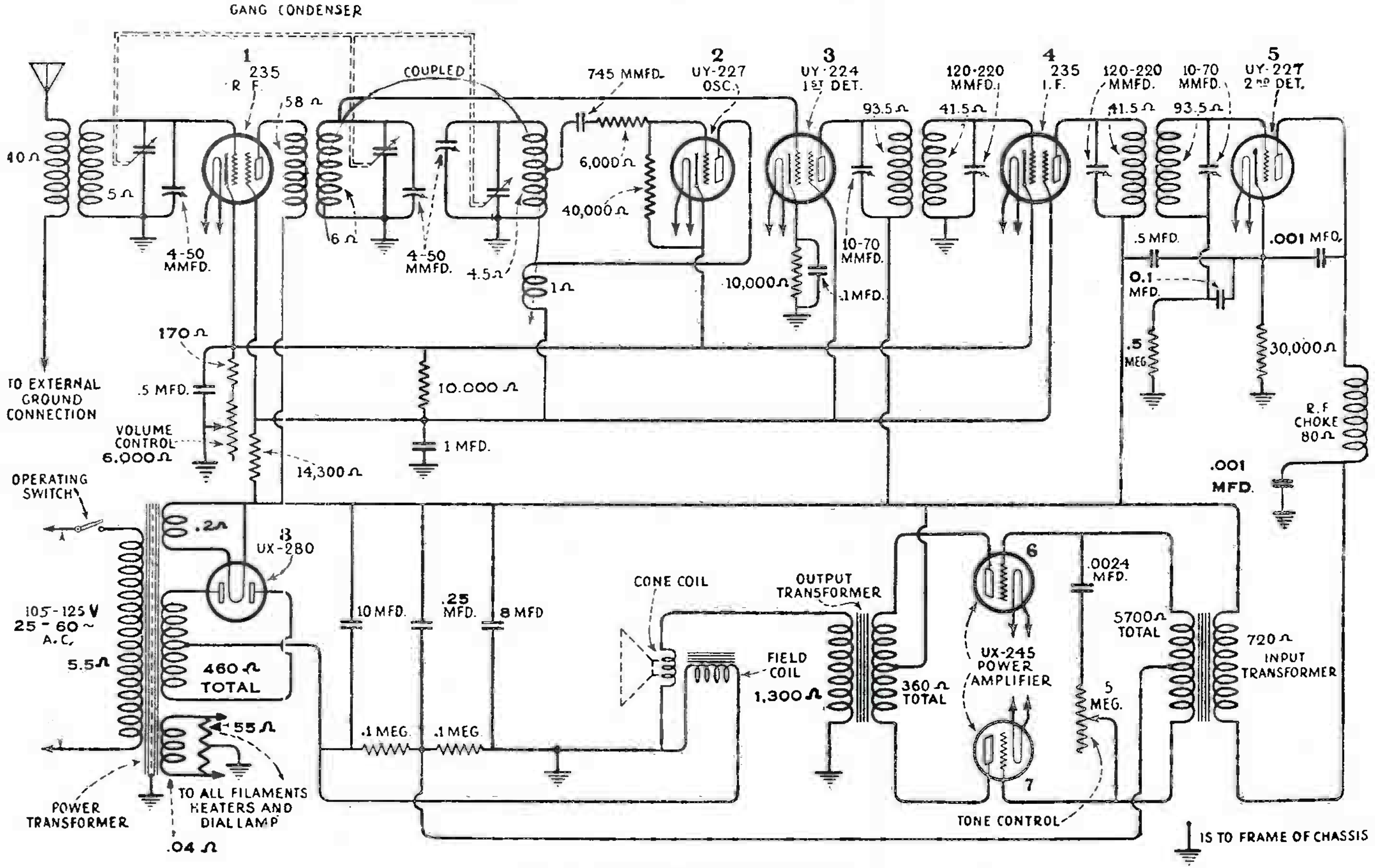

Fig. 3 Schematic Circuit Diagram

ELECTRICAL DESCRIPTION OF CIRCUIT

The schematic diagram is shown in Figure 3. Starting from the antenna circuit, we find the following action taking place in the various stages.

The antenna is coupled to the grid coil of the R. F. stage by means of a high inductance coil connected from antenna to ground. This inductance has a sufficiently high value so that variations in the antenna system have but little effect on the tuning of the adjacent circuit.

The Westinghouse Radiotron 235 used in the R.F. and I.F. stages is of particular interest. This radiotron is similar in appearance and general characteristics to Radiotron UY-224. It has, however, considerably different characteristics as regards its operation with various amounts of grid bias. Over a comparatively narrow range of applied signal voltage Radiotron UY-224 functions as a distortionless amplifier. If, however, this narrow range of voltages is exceeded by the application of a strong signal, distortion will occur. This is particularly noticeable when listening to a signal of only moderate strength on a broadcast channel, adjacent to a powerful local broadcast station. In this case, even though there are sufficient radio frequency stages to prevent the local broadcast signal from reaching the grid of the detector tube, the local signal may penetrate through one or two tuned circuits as far as the grid of the first radio frequency radiotron. If the first R.F. stage radiotron is a UY-224, it may be overloaded by the local signal, even when it is tuned to a more distant station on an adjacent channel. This overloading has the effect of allowing the local signal to distort the desired signal. The desired signal is then passed on in the usual manner in this distorted form and no amount of selectivity in further stages will eliminate this distortion. Radiotron 235 is designed to overcome this condition. It will operate as a distortionless radio frequency amplifier over a far wider range of signal voltages. Consequently the distortion of a desired signal by a nearby local signal (ordinarily called cross-modulation)

CANADIAN WESTINGHOUSE CO.

does not occur. This characteristic also enables the variable grid bias method of volume control to be used.

At this point the oscillator should be considered as its output is also inductively coupled to the grid coil of the first detector. This is a tuned grid circuit oscillator using a Westinghouse Radiotron UY-227 and having a closely coupled plate coil, with sufficient feed back to provide stable operation. The grid circuit is tuned by a special section of the gang condenser, having less capacity than the other three sections, and by an oscillator coil which has considerably less inductance than the other radio frequency coils. The plates of the oscillator gang condenser section are so shaped that with the associated oscillator coil the frequency of the oscillations set up in this local circuit is always 175 kilocycles higher than the frequency to which the radio frequency circuits are tuned.

The next circuit to examine is the first detector. The circuit is tuned by means of one of the gang condensers to the frequency of the incoming signal. In the grid circuit there is present the incoming signal and the oscillator signal, the latter being at a 175 K.C. difference from the former. The first detector is biased so as to operate as a plate rectification detector and its purpose is to extract the difference or beat frequency, produced by combining the signal and oscillator frequencies. The beat frequency—175 K.C.—appears in the plate circuit of the first detector which is accurately tuned to 175 K.C. The tube used as a first detector is Westinghouse Radiotron UY-224.

The next circuit is the intermediate frequency stage which gives a very high degree of amplification. The grid and plate circuits of this stage, as well as the plate circuit of the first detector and the grid circuit of the second detector are tuned to 175 kilocycles. A Westinghouse Radiotron 235 is used in the intermediate stage.

The second detector is a high-plate voltage, grid-biased type detector which gives sufficient output to drive two Westinghouse Radiotrons UX-245 connected in push-pull without an intermediate audio stage. The purpose of the second detector is to extract the audio frequency component of the R.F. signal which represents the voice or musical modulations produced in the studio of the broadcasting station. The audio component is extracted and used to drive the power tubes while the R.F. current is by-passed and not used any further.

A filter circuit consisting of a 0.1 mfd. condenser and 0.5 megohm resistor is used in the second detector grid circuit. This further reduces the small A.C. hum voltages present in the detector stage.

The power stage comprises two Westinghouse Radiotrons UX-245 connected in push-pull. These tubes give a large undistorted output which is delivered to the cone coil of the dynamic type loudspeaker by means of a center-tapped primary step-down transformer connected in the plate circuit of the Radiotrons UX-245. The primary impedance is of a value to match the plate impedance of the two tubes, and the secondary of a value that matches the cone coil of the reproducer unit. Thus the full output of the two Radiotrons UX-245 is efficiently applied to the loudspeaker.

The rectifier is a Radiotron UX-280 which provides a full wave rectifying device of ample capacity for providing all plate and grid voltages used in the receiver and power amplifier, as well as power for

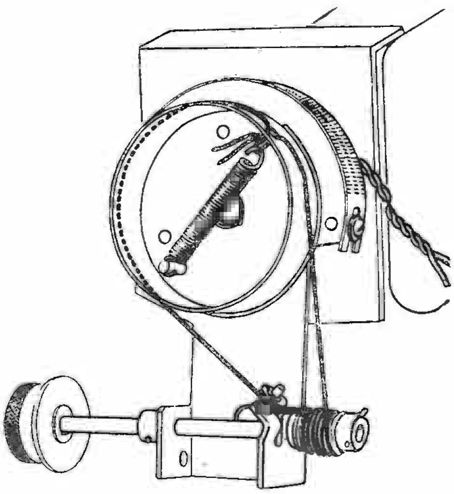

Fig. 5 Condenser Drive

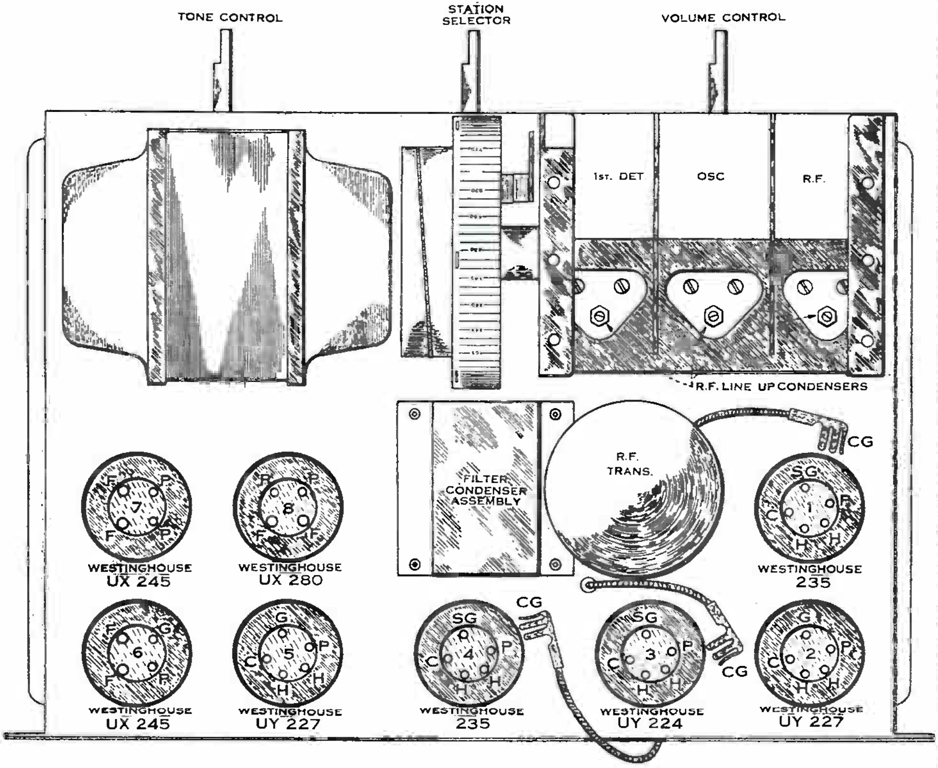

Fig. 6 R.F. Line-up Condensers and Tube Locations

CANADIAN WESTINGHOUSE CO.

the field of the reproducer unit. A specially designed filter system removes all ripple from the D.C. output of the rectifier. This results in a receiver having no A.C. hum or extraneous noise other than that picked up in the antenna system.

The filtering system used is of the "brute force" type, using large electrolytic condensers and two reactor coils. The second reactor coil is also the field coil of the reproducer unit. As the electrolytic type of condensers offer an appreciable impedance to the radio frequency current which must be by-passed through the voltage supply system, an additional one microfarad paper condenser is connected across the high voltage plate supply.

A tone control, consisting of a 0.0024 mfd. condenser in series with a 5 megohm variable resistor connected across the two grids of Radiotrons UX-245 is incorporated in this stage. The tone control functions to reduce the high frequency output as the resistance is reduced. At the extreme low position, the condenser and secondary of the A.F. transformer resonate at a low frequency and thereby further accentuate the bass response, thus partially compensating for the lack of a large speaker baffle surface.

(3) METER READINGS AT RADIOTRON SOCKETS.

The following readings taken at each radiotron socket with the receiver in operating condition should prove of value when checking with test sets such as the Weston Model 547 or others giving similar reading. The plate currents are not necessarily accurate for each tube as the cable in the test set will cause some circuits to oscillate due to its added capacity. Small variations of voltages will be caused by different tubes and line voltages. Considerable variation of some of the voltages will also be caused by a varying amount of received signal. Where two sets of readings are given the first reading is taken with the volume control at minimum setting. The second reading with the volume control at maximum setting, and the antenna and ground short-circuited. The readings given are taken with 120 volts line voltage. The numbers in the first column indicate the tube socket numbers shown in Figure 6.

Tube No.	Cathode or Filament to Control Grid Volts, D.C.		Cathode to Screen Grid Volts, D.C.		Cathode or Filament to Plate Volts, D.C.		Plate Current M.A.		Heater or Filament Volts	Screen Grid Current M.A.	
1	—40	— 3.5	63	70	235	275	0	3.8	2.35	0	0.7**
2	0	0	....	....	65	70	4.0	5.0	2.35	0	....
3	— 7 0	— 4.5	115	70	275	270	0.1	0.3	2.35	0	0
4	—40	— 3.5	63	70	235	275	0	4.5	2.35	0	0.7**
5	—17	—16.0	....	....	250	240	0.4	0.4	2.35	....	....
6 or 7	—35*	—35*	....	....	235	245	28	28	2.35	....	....

*Not true reading due to resistance in circuit.

**This reading may be + or — depending on age of tube.

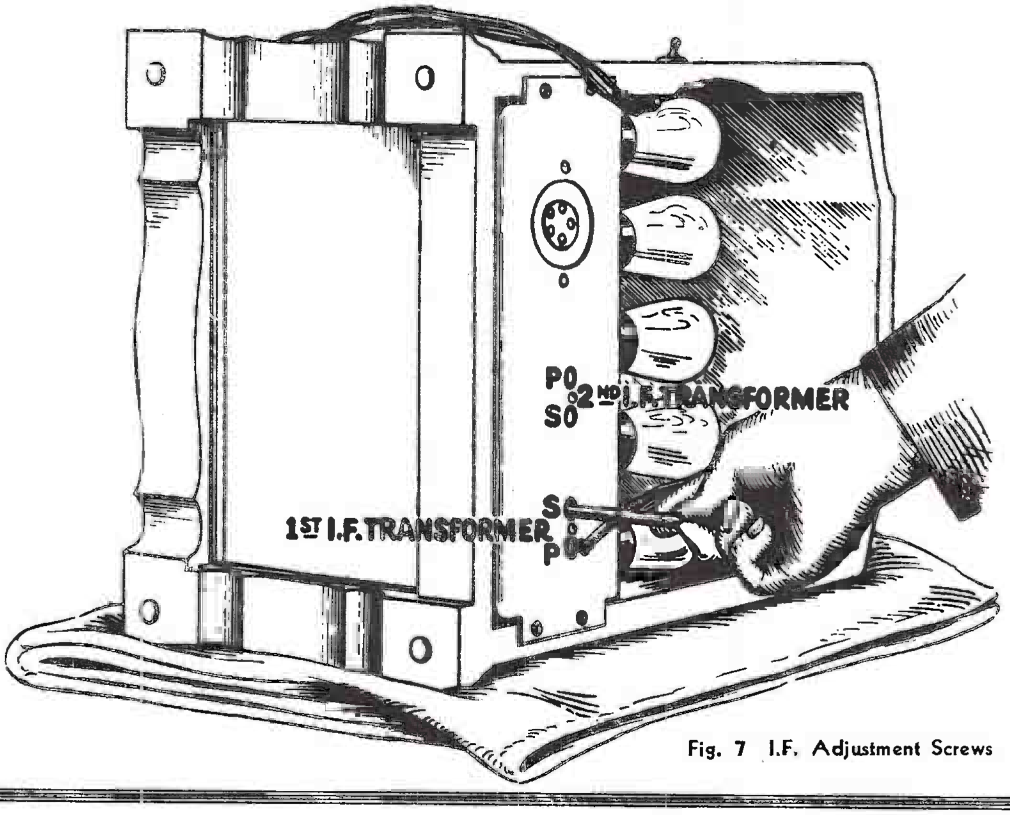

Fig. 7 I.F. Adjustment Screws

CANADIAN WESTINGHOUSE CO.

Meter Reading Service Data Chart

VOLUME CONTROL AT MAXIMUM ANTENNA AND GROUND SHORTED

VOLTAGE CHARACTERISTICS	1 R.F.				2 OSC.			3 1st DET.				4 I.F.				5 2nd DET.			6 PWR.A.F.			7 PWR. A.F.			CAUSE OF INCORRECT READING
	C.G. Volts	S.G. Volts	Plate Volts	Plate M.A.	Grid Volts	Plate Volts	Plate Volts	C.G. Volts	S.G. Volts	Plate Volts	Plate M.A.	C.G. Volts	S.G. Volts	Plate Volts	Plate M.A.	Grid Volts	Plate Volts	Plate M.A.	Grid Volts	Plate Volts	Plate M.A.	Grid Volts	Plate Volts	Plate M.A.	
NORMAL	3.5	70	240	3.8	0	70	5.0	5.0	70	270	0.3	3.5	70	240	5.0	17	240	0.5	35	245	28	35	245	28	
No C.G. Voltage on Tube No. 1	0	70	240	9.0																					Open Secondary of R.F. Transformer
No. C. G. Voltage on Tube No. 3								0	70	270	1.5														Open 1st Det. Grid Coil
No. C. G. Voltage on Tube No. 4												0	70	240	9.0										Open Secondary of 1st I.F. Transformer
No. C. G. and Low Plate Voltage on Tube No. 5																0	165	4.0							Open Sec. of 2nd I.F. Trans or 0.5 Meg. Res.
Low Voltages on All Tubes	2.0	25	180	2.0	0	45	3.0	3.0	25	170	0	2.0	25	180	3.0	10	160	0.4	0	165	100	40	180	0	Open One-Half Secondary of Interstage Transformer
Low Voltages on All Tubes	2.0	25	180	2.0	0	45	3.0	3.0	25	170	0	2.0	25	180	3.0	10	160	0.4	40	180	0	0	165	100	Open One-Half Secondary of Interstage Transformer
No Voltages on Tube No. 2					0	0	0																		Cpen Oscillator Plate Coil
No. Plate Voltage on Tube No. 1	3.5	60	0	0																					Open R.F Plate Coil
No Plate Voltage on Tube No. 3								4.0	70	0	0														Open Primary of 1s' I.F. Transformer
No Plate Voltage on Tube No. 4												3.5	60	0	0										Open Primary of 2nd I.F. Transformer
No Voltages on Tube No. 5																0	0	0							Open R.F. Choke or Primary of Input Transformer
No Plate Voltage on Tube No. 6																			20	0	0				Open One-Half Primary of Output Transformer
No Plate Voltage on Tube No. 7																						20	0	0	Open One-Half Primary of Output Transformer
No C. G. Voltage on Tubes Nos. 1 and 4	0	70	240	9.0								0	70	240	9.0										Shorted 0.5 Mfd. Condenser
No. C. G. Voltage on Tube No. 3								0	70	240	4.0														Shorted 0.1 Mfd. Condenser
No C. G. or S. G. Voltages on Tubes Nos 1, 2, 3 or 4	0	0	240	0	0	0	0	0	0	270	0	0	0	240	0										Shorted 1.0 Mfd. Condenser
Low Voltages on All Tubes	0.5	35	50	0.6	0	12	0.5	1.0	15	50	0	0.5	15	55	0.5	2.0	50	0	0	40	65	0	40	65	Shorted .25 Mfd. Condenser
No C. G. Voltages on Tube No. 5																0	180	30							Shorted 0.5 Mfd. Condenser
Low Plate Voltage on Tube No. 5																0	60	1.5							Shorted 0.1 Mfd. Condenser
No Plate Voltage on Tube No. 5																25	0	0							Shorted .001 Mfd. Condenser
Low Plate M.A. on Tubes Nos. 6 and 7																			50	260	10.0	50	260	10.0	Shorted 100,000 Ohm Resistor
Low Voltages on All Tubes	1.5	38	135	1.5	0	35	2.0	2.0	30	130	0	1.5	35	140	2.0	6.0	120	0.25	0	125	55	0	125	55	Shorted 100,000 Ohm Resistor
High C. G. Voltage on Tubes Nos. 1 and 4	200	0	0	0	0	0	0	20	200	275	0	200	0	0	0										Open Volume Control or 170 Ohm Resistor
High S. G. Voltages	4.5	120	275	7.5	0	100	12	14	120	275	1.0	4.5	100	275	6.0										Open 10,000 Ohm Resistor
No C. G. or S. G. Voltage on Tubes Nos. 1, 2, 3, and 4	0	0	250	0	0	0	0	0	0	240	0	0	0	250	0										Open 14,300 Ohm Resistor
No Voltages on Tube No. 3								0	0	0	0														Open 10,000 Ohm Resistor
No Plate Voltage on Tube No. 5																14	0	0							Cpen 30,000 Ohm Resistor

CANADIAN WESTINGHOUSE CO.

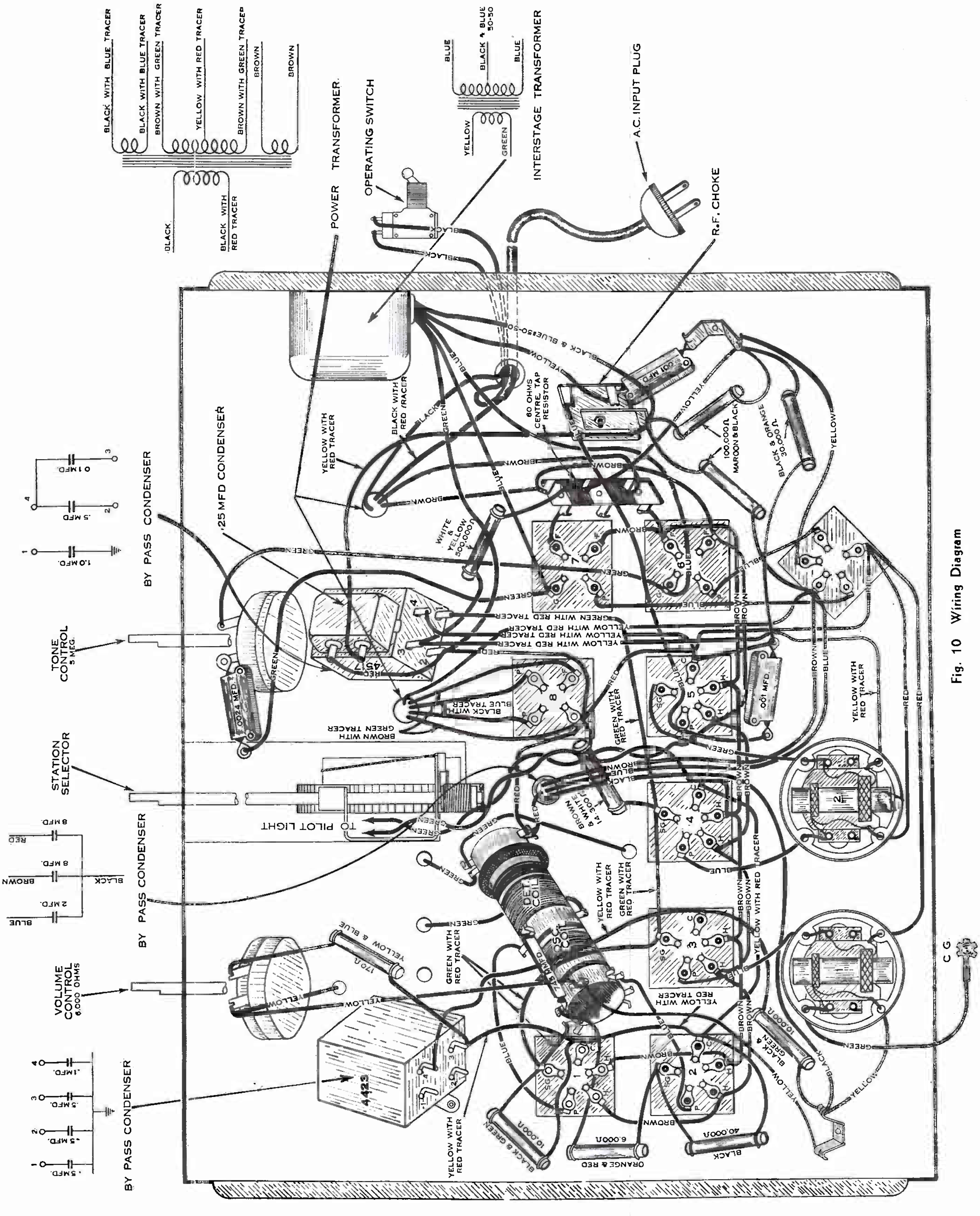

Fig. 10 Wiring Diagram

CANADIAN WESTINGHOUSE CO.

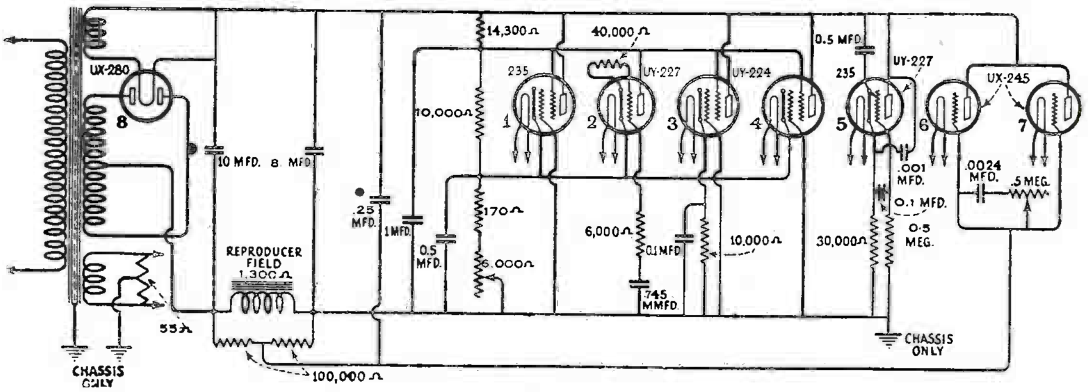

Fig. 8 Schematic Diagram of Voltage Supply System

Continuity Tests

VOLUME CONTROL AT MAXIMUM

DISCONNECT 8 MFD. AND 10 MFD. CONDENSERS BEFORE MAKING FOLLOWING TESTS

Terminals	Correct Effect	Incorrect Effect	
		Indication	Caused By
Antenna lead to ground lead	Closed (40 ohms)	Open	Open antenna coupling coil
C1, 2 or 4 to Gnd. (Vol. Cont. at "Minimum")	Closed (6170 ohms)	Open Short	Open 170 ohm resistor or volume control Shorted .5 mfd. condenser
C1, 2 or 4 to Gnd. (Vol. Cont. at "Maximum")	Closed (170 ohms)	Open Short	Open volume control or 170 ohm resistor Shorted .5 mfd. condenser
CG1 to Gnd	Closed (5 ohms)	Open Short	Open grid coil of R.F. tube Shorted tuning or line-up condenser
SG 1, 3, 4, or P2 to Gnd.	Closed (10170 ohms)	Open Short	Open 10,000 ohm or 170 ohm resistor Shorted 1 mfd. condenser
P1 to Gnd.	Closed (24528 ohms)	Open 58 ohms 14,358 ohms	Open R.F. plate coil, 14300 ohm resistor, 10,000 ohm resistor or 170 ohm resistor. Shorted 8.0 mfd. condenser Shorted 1 mfd. condenser
CG2 to C2	Closed (40,000 ohms)	Open	Open 40,000 ohm resistor.
C3 to Gnd.	Closed (10,000 ohms)	Open Short	Open 10,000 ohm resistor Shorted .1 mfd. condenser
CG3 to Gnd.	Closed (6.0 ohms)	Open Short	Open 1st detector grid coil Shorted 1st detector tuning or line-up condenser
P3 to Gnd.	Closed (24,564 ohms)	Open 24,470 ohms 93.5 ohms 14,393.5 ohms	Open primary of 1st I.F. transformer, 14,300 ohm resistor, 10,000 ohm resistor or 170 ohm resistor. Shorted primary tuning condenser of 1st I.F. transformer. Shorted 8 mfd. condenser Shorted 1 mfd. condenser
CG4 to Gnd.	Closed (41.5 ohms)	Open Short	Open secondary of 1st I.F. transformer Shorted secondary tuning condenser of 1st I.F. transformer.
P4 to Gnd.	Closed (24,512 ohms)	Open 24,470 ohms 41.5 ohms 14,341.5 ohms	Open primary of 2nd I.F. transformer, 14,300 ohm resistor, 10,000 ohm resistor or 170 ohm resistor. Shorted primary tuning condenser of 2nd I.F. transformer Shorted 8 mfd. condenser Shorted 1 mfd. condenser

CANADIAN WESTINGHOUSE CO.

Continuity Tests—Continued

Terminals	Correct Effect	Incorredct Effect	
		Indication	Caused By
C5 to Gnd	Closed (30,000 ohms)	Open	Open 30,000 ohm resistor
C5 to CG5	Closed (530,094 ohms)	Open 94 ohms	Open 30,000 ohm resister or 0.5 meg resister or I.F. secondary. Shorted 0.1 mfd. condenser.
C5 to P5	Closed (55,270 ohms)	Open Short	Open R.F. choke or interstage transformer. Shorted .001 mfd. condenser.
CG5 to Gnd.	Closed (0.5 meg.)	Open Closed (30,000 ohms)	Open 0.5 meg. resistor Shorted 0.1 mfd.
P5 to Gnd.	Closed (25,270 ohms)	Open 800 ohms 15,100 ohms	Open R.F. choke, primary of A.F. transformer, 14,300 ohm resistor, 10,000 ohm resistor or 170 ohm resistor. Shorted 8 mfd. condenser Shorted 1 mfd. condenser
G6 to G7	Closed (5700 ohms)	Open Short	Open secondary of interstage transformer Shorted .0024 mfd. condenser
P6 to P7	Closed (360 ohms)	Open	Open primary of output transformer
P8 to P8	Closed (460 ohms)	Open	Open UX-280 plate winding of power transformer
P8 to Gnd.	Closed (1530 ohms)	Open	Open field coil of reproducer or UX-280 plate winding
Across A.C. input plug	Closed (5.5 ohms)	Open	Open primary of power transformer

(6) MAGNETIC PICK-UP CONNECTION.

No provision has been made on Westinghouse Model 801 for connection of a magnetic pick-up. If it is desired to utilize the excellent tonal qualities of this receiver in connection with a magnetic pick-up to reproduce recorded selections, the following parts will be required:

A UY to UY adapter. This should be of the type resembling a radiotron tube base having five contacts to receive the five prongs from a UY-227 radiotron and five prongs to engage the contacts of a UY socket. The prongs should be connected to their corresponding contacts except that a flexible lead should be brought out from the grid contact and another flexible lead from the grid prong. The cathode prong should be connected to the cathode contact and a flexible lead should be brought out from the cathode prong. The magnetic pick-up with its associated volume control and appropriate audio transformer should be connected to these two leads from the grid prong and grid contact, these leads going to the secondary of the audio coupling transformer. The lead from the cathode prong should be connected to one end of a 5000 ohm carbon resistance. The other end of this resistance should be grounded to the frame of the receiver.

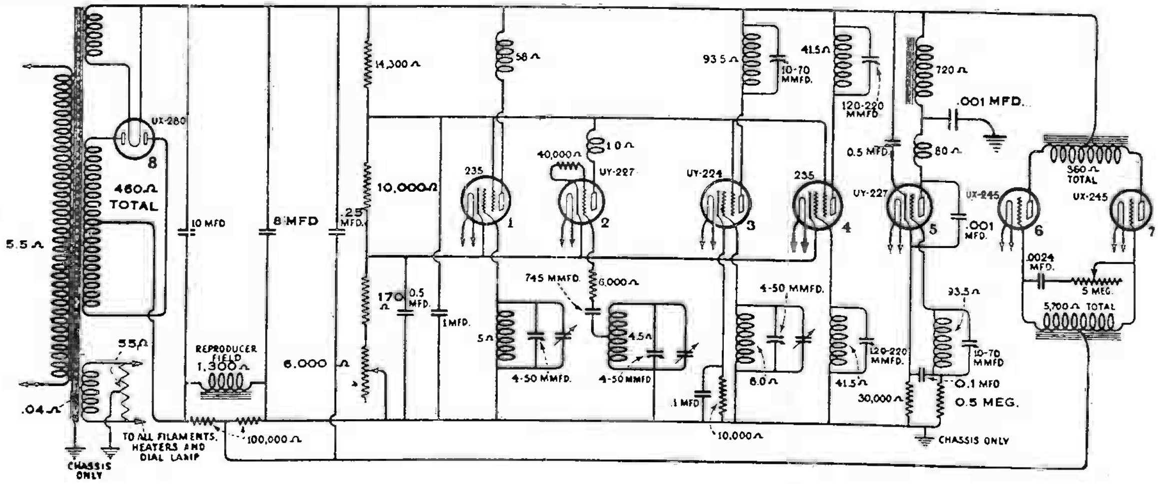

Fig. 9 Continuity Schematic Diagram

CAPEHART CORP.

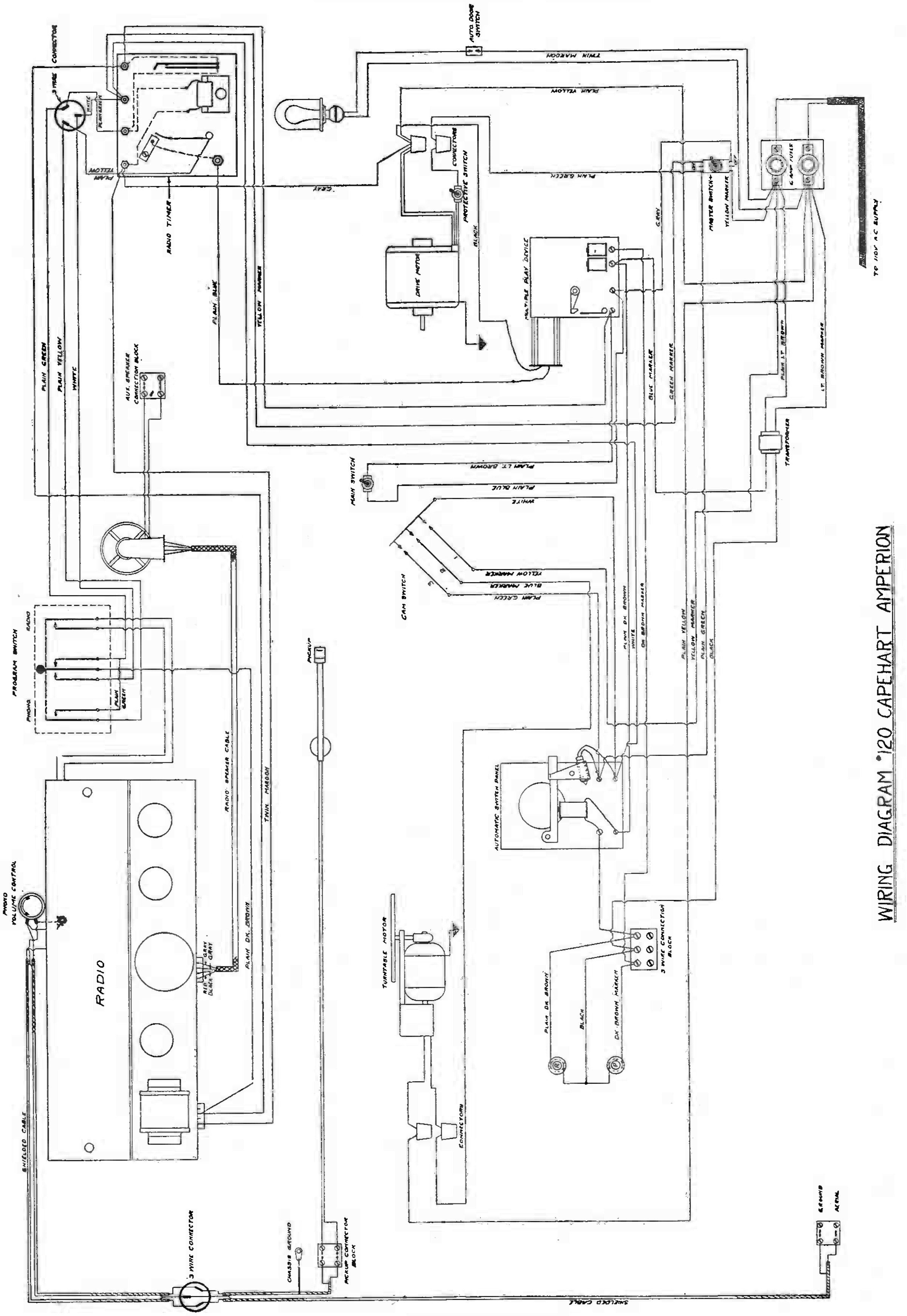

Model 120½

The Model 120½ Amperion is identical with the Model 120 with the addition of two 250 push-pull tubes as a third stage to give power for handling from one to three additional speakers.

An additional 280 tube is required as rectifier.

CAPEHART CORP

Model 140

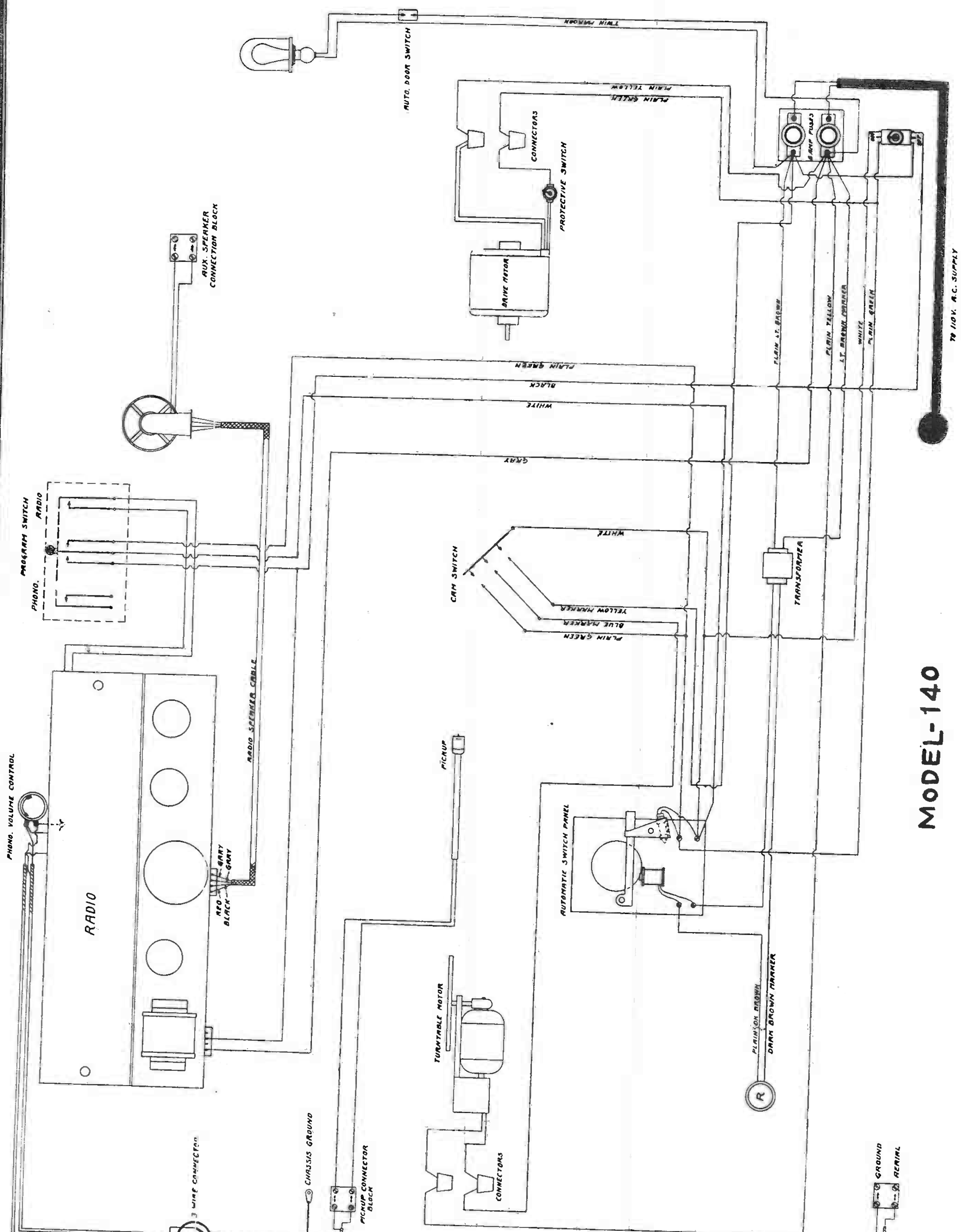

CAPEHART CORP.

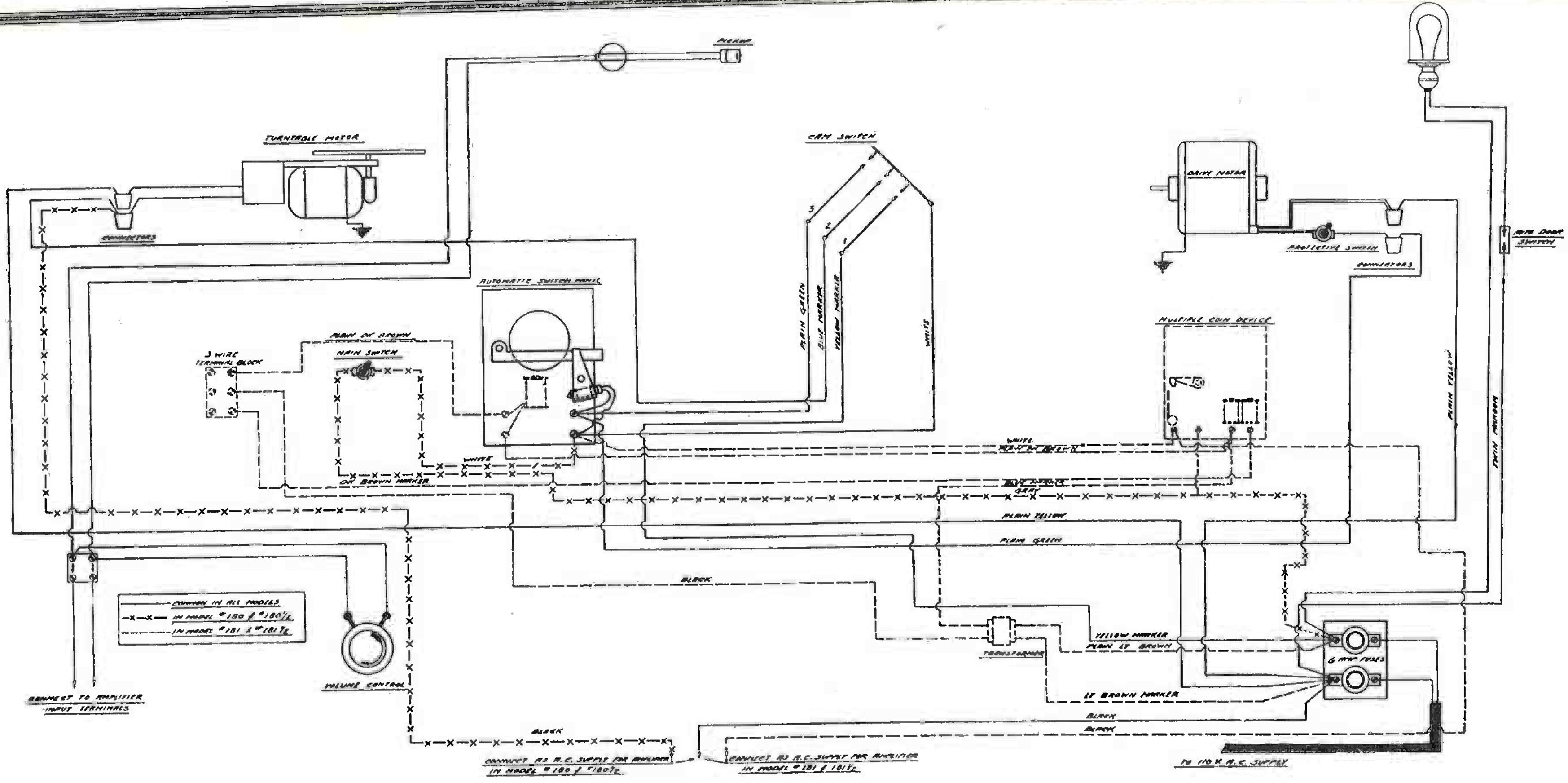

WIRING DIAGRAM #180—#180½—#181—#181½. CAPEHART AMPERION

Model 181½

The Model 181½ Amperion is identical with the Model 181 with exception that it is supplied with a three stage amplifier utilizing one 227 tube in each of the first and second stages and two 250 push-pull tubes as a third and output stage.

Two 281 tubes are required as rectifiers.

This amplifier requires a choke coil and output transformer, the output transformer distributing music for the various speakers.

This amplifier is designed to operate one to four speakers at extreme undistorted volume.

The above mentioned speakers may be operated from the Model 181½ and in addition to that, Capehart No. 500 auxiliary speakers may also be operated from the Model 181½.

CAPEHART CORP.

Models 181-181½

INSTRUCTIONS FOR SETTING UP FOR OPERATION

After the instrument is unpacked, care should be taken to remove each and every bond which is shown by a small red tag and is used in tying the instrument for packing and shipment.

The instrument is shipped with the record changing device in what is termed as the automatic stop position. Therefore after the above mentioned bonds are removed and before the instrument is connected to the source of electrical supply, the records should be loaded into the record magazine.

CARE must be exercised in loading records into the magazine, being certain that each and every record has an automatic change groove extending from the end of the music groove toward the center of the record.

The automatic change groove may be either of the two conventional types, known as the oscillating and the spiral.

The one in the record magazine is of the oscillating type while on the turntable is a record of the spiral type.

FAILURE TO PLACE RECORDS IN THE INSTRUMENT WITH AUTOMATIC CHANGE GROOVES ON BOTH SIDES WILL RESULT IN THE INSTRUMENT NOT AUTOMATICALLY CHANGING RECORDS WHEN THAT PARTICULAR RECORD HAS BEEN PLAYED.

The Capehart Amperion will play between ten and fourteen standard ten-inch double-faced records and the records should be loaded into the magazine to a height that allows the top record to come between the upper and lower holes on each side of the record magazine.

After the record magazine has been properly loaded, center a record over the spindle on the turntable and before placing a needle in the pickup, connect the instrument to the proper electrical source of supply which must be 110V alternating current at the cycles specified on the specification tag mounted on the back of the cabinet.

This equipment may be had to operate on either 110V 50-60 cycles A.C., 110V 40 cycles A.C., or 110V 25-30 cycles A.C.

However, the same instrument will not operate on any two of these currents nor will it operate on direct current except through the use of a rotary converter.

Then turn the main-switch which is located on the inside right end of the cabinet to the ON position, at which time the tone arm will automatically come back to the playing position just over the edge of the records and the pickup will automatically be lowered to the record.

A needle may be inserted in the pickup at this time and let down gently by hand, allowing the point of the needle to come into contact with the music groove on the record, at which time reproduction will be heard providing the volume control, which is located on the inside right end of the cabinet, is not turned as far to the left as possible.

Each time a needle is placed in the pickup it should be let down gently by hand, allowing the point of the needle to come into contact with the music groove on the record and by the time the record has finished playing, the needle point will have become shaped to fit the music groove, thereby eliminating the possibility of the needle sliding across the record.

The Model 180 Amperion is equipped withth a three stage amplifier utilizing one 227 tube on each of the first and second stages and two push-pull 245 tubes in the third and output stage.

One 280 tube is required as rectifier.

This amplifier requires a 245 output transformer which distributes the music from the amplifier for the various speakers.

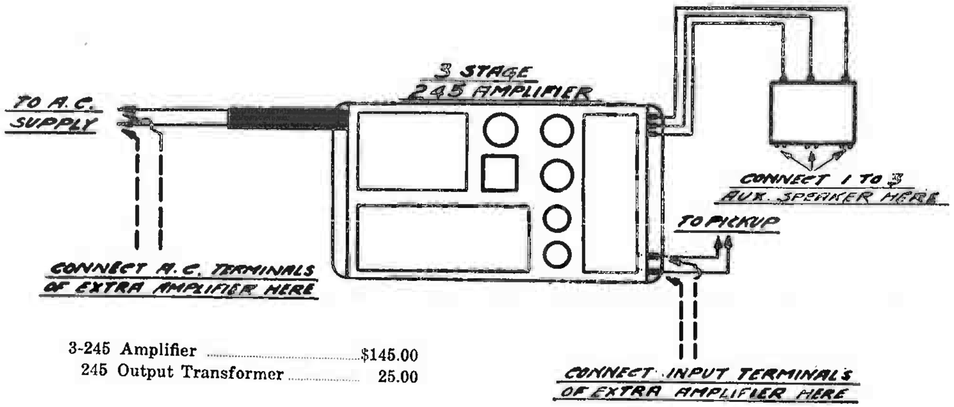

3-245 Amplifier	$145.00
245 Output Transformer	25.00

The amplifier is designed to operate one to three Capehart auxiliary speakers of the No. 300, 325, 350 or 375 type.

If you prefer, you may make a baffle of standard building celotex from two to three feet square, cutting on 8-in. hole exactly in the center of the celotex and mounting a Capehart No. 300 speaker unit behind the celotex, making a concealed music installation.

This is quite often desirable as light drapes or a special grill of your own design may be mounted over the front side of the baffle or the baffle may be mounted entirely out of sight.

CROSLEY RADIO CORP.

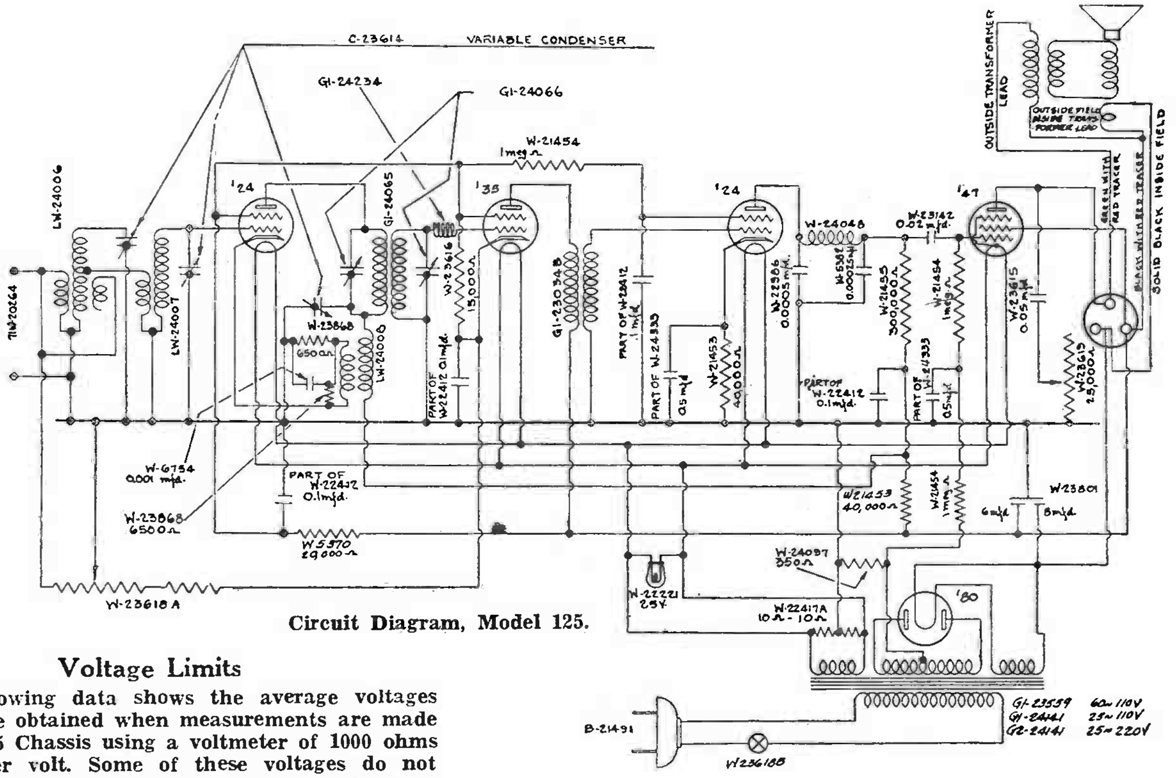

Circuit Diagram, Model 125.

Voltage Limits

The following data shows the average voltages which will be obtained when measurements are made on Model 125 Chassis using a voltmeter of 1000 ohms resistance per volt. Some of these voltages do not represent actual voltages present at the tube elements. A typical example of this is the grid voltage of the pentode tube, which is actually about 16 volts, but only shows about 1 volt when measured in this way.

Screen Grid Voltages

Pentode	200 to 230
I. F.	75 to 95
1st Det.	75 to 95
2nd Det.	15 to 25 (250V scale), 3-8 (50V scale)

Plate Voltages

Pentode	200 to 230
I. F.	200 to 230
1st Det.	160 to 180
2nd Det.	75 to 90 (250V scale), 20-30 (50V scale)

Control Grid Voltages

Pentode	0.5 to 1.5
I. F.	1.5 to 2.5 (20-30 vol. cont. off)
1st Det.	5.5 to 7.5
2nd Det.	4.0 to 6.0

Filament Voltages

All tubes but rectifier	2.3 to 2.5
Rectifier tube	4.6 to 5.0

Voltage Limits, Model 7

The following tube voltages are the approximate values which should be obtained with tubes in place and receiver connected to a 117½ volt line, using a voltmeter of about 1000 ohms resistance per volt.

Filament Voltages	
Buffer, Oscillator, and Detector Tubes	2.2 to 2.6
Rectifier tube	4.3 to 4.9
Plate Voltages	
Buffer Tube	160 to 190
Oscillator tube	155 to 185
Detector Tube	140 to 160
Grid Voltages	
Buffer Tube	2 to 4
Oscillator Tube	9 to 13
Detector tube	6 to 10
Screen Grid Voltages	
Buffer and Detector tubes	55 to 75

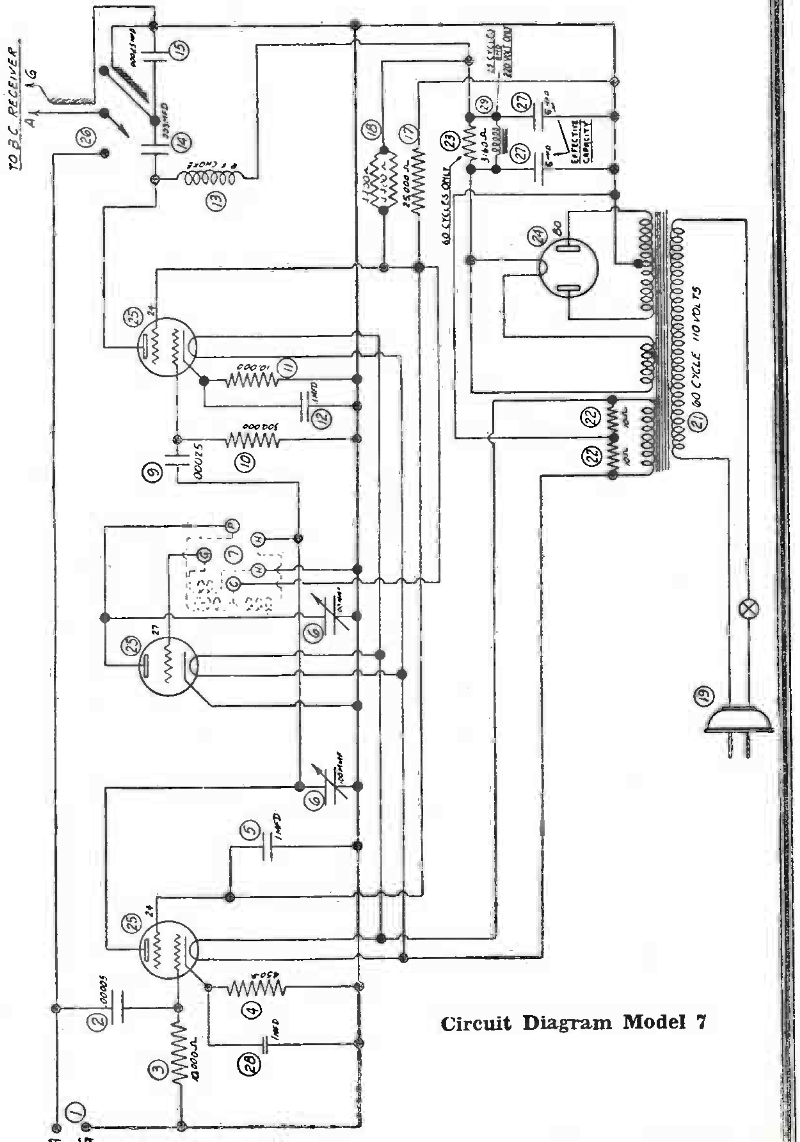

Circuit Diagram Model 7

CROSLEY RADIO CORP.

MODELS 27 and 28

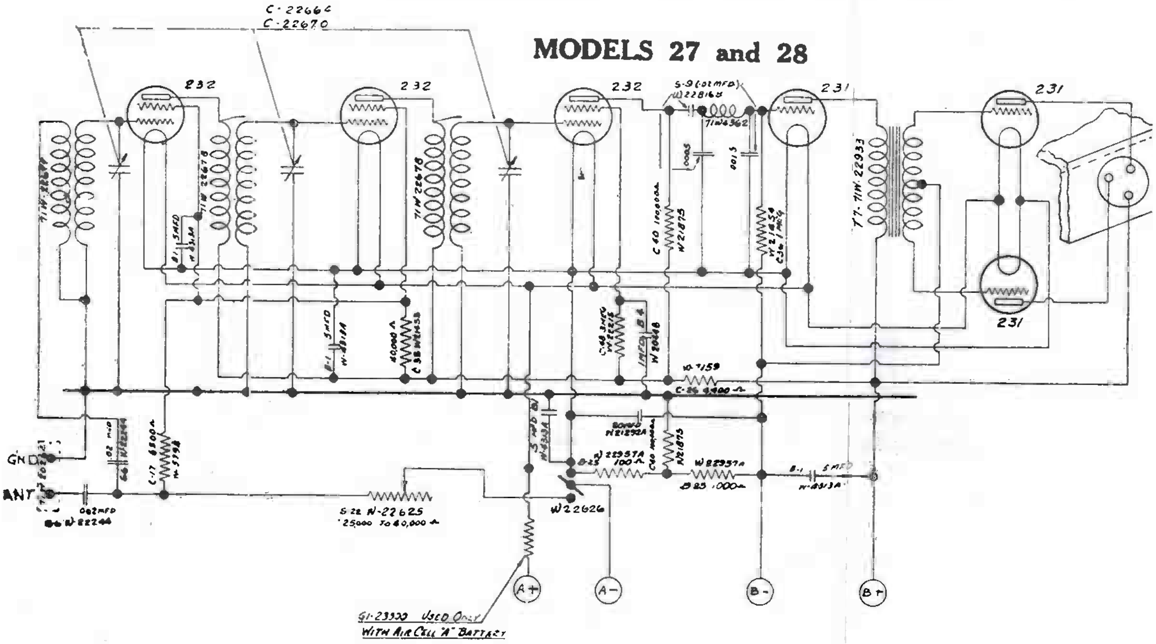

Voltage Limits Model 28.

The following are the approximate voltages which should be measured at the sockets with tubes in place, speaker connected, and fresh batteries, using a high-resistance voltmeter (600 ohms or more per volt).

Filament Voltages		
All tubes	1.8 to	2.0
Plate Voltages		
R. F. tubes	120 to	140
Detector tube	50 to	65
First A. F. tube	125 to	160
Output tubes	130 to	160
Control Grid Voltages		
R. F. and detector tubes	2 to	3.5
First A. F. and output tubes	20 to	28
Screen Grid Voltages		
R. F. tubes	55 to	70
Detector tubes	15 to	22
Plate Current		
R. F. tubes	0.0022 to	0.0025
First A. F.	0.005 to	0.0065
Output tubes	0.007 to	0.0085
Screen Grid Current		
R. F. tubes	0.00055 to	0.0007

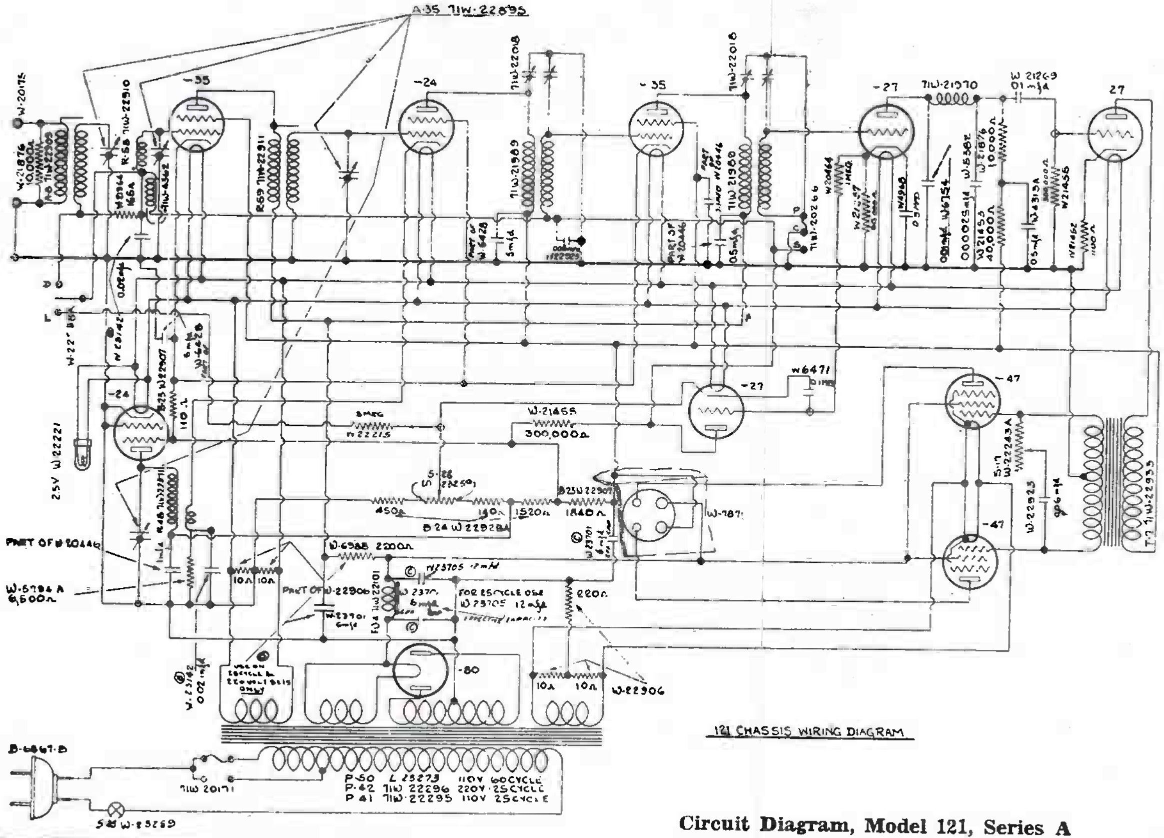

Circuit Diagram, Model 121, Series A

CROSLEY RADIO CORP.

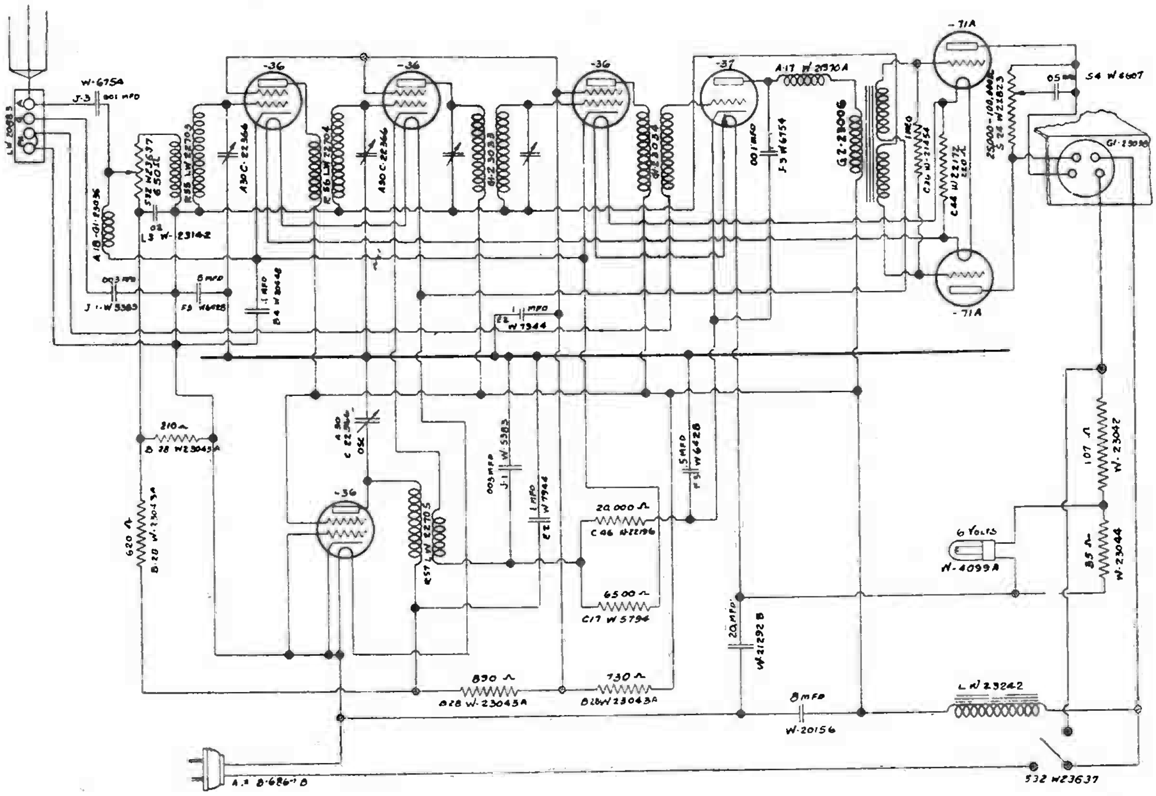

Circuit Diagram, Model 126

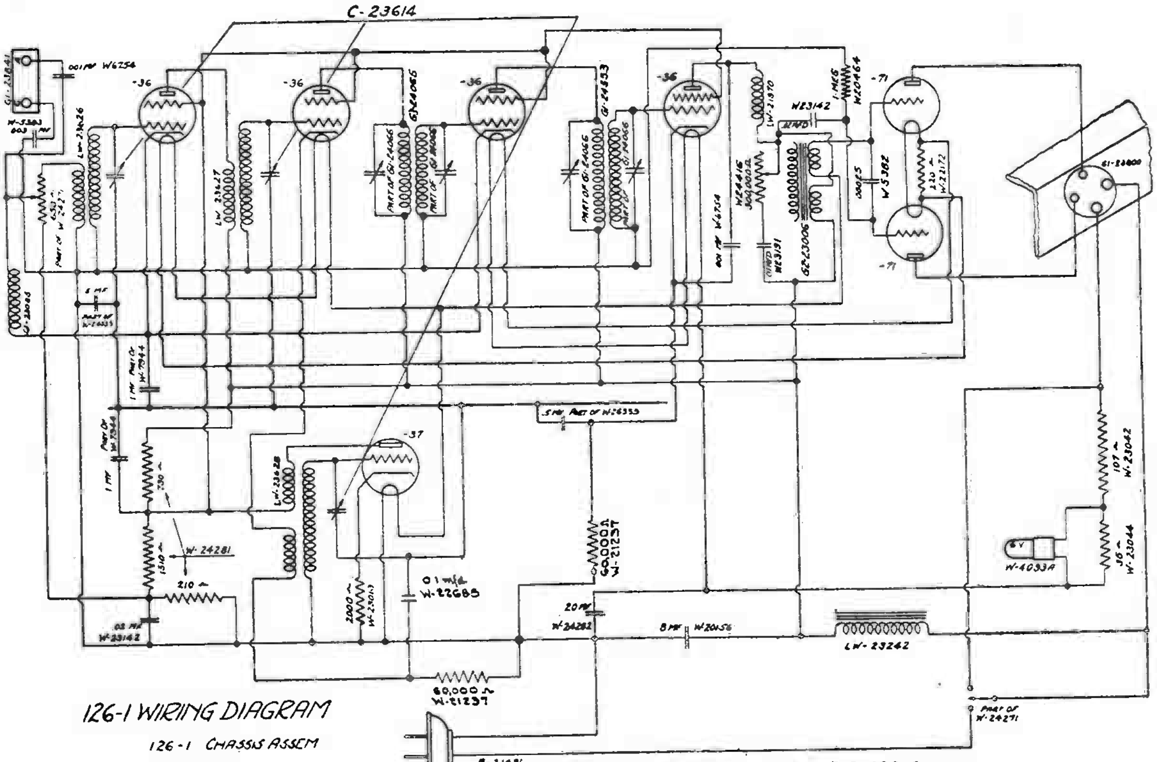

Circuit Diagram, Model 126-1

CROSLEY RADIO CORP.

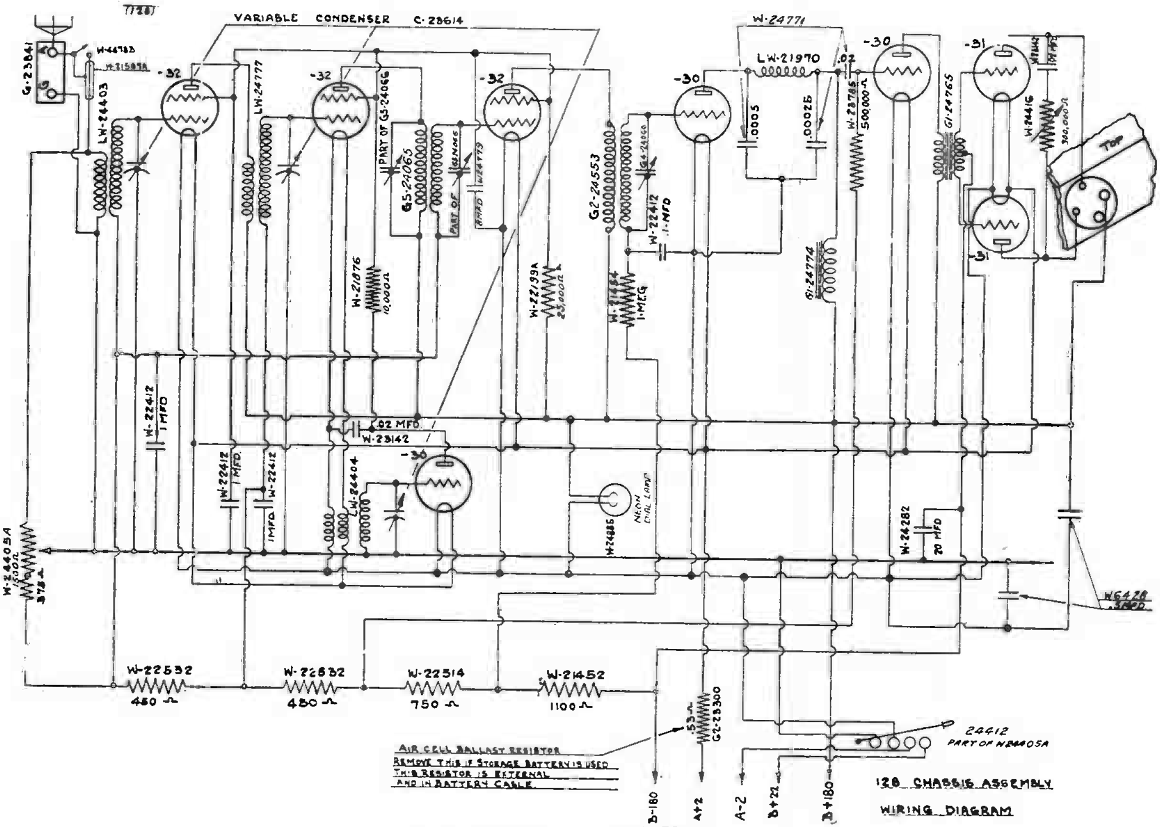

Circuit Diagram, Model 128

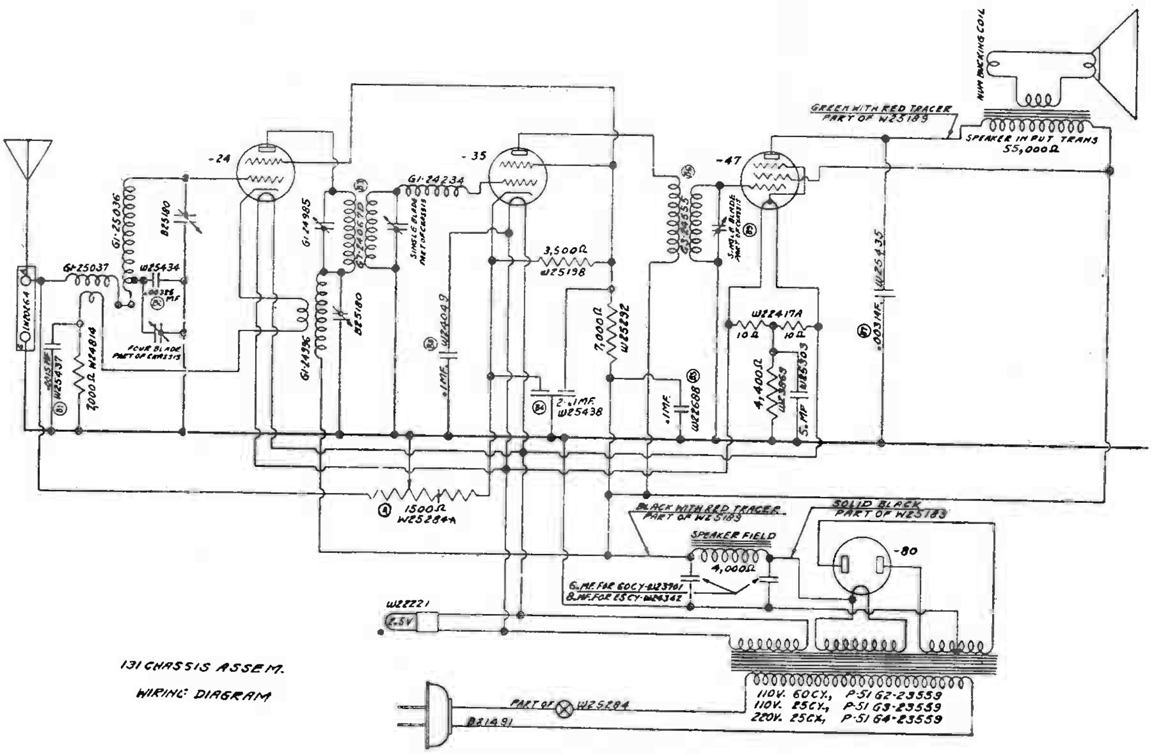

Circuit Diagram, Model 131

CROSLEY RADIO CORP.

Model 127

Specifications

Model 127 is a compact, ten tube superheterodyne chassis. It is for operation from A. C. house-lighting circuits, and may be obtained for 110 volt 25 to 50 cycle, 110 volt 60 cycle, or 220 volt 25 to 60 cycle circuits.

The tubes used are as follows: a -35 or -51 radio-frequency amplifier, a-35 or -51 first detector (-24 tubes were used for the first detectors in the earlier chasses of this series, a -27 oscillator, a -35 or -51 first intermediate-frequency amplifier, a -24 second intermediate-frequency amplifier, a -27 diode second detector and automatic volume control tube, a -27 audio-frequency amplifier, two PZ or -47 pentode push-pull output tubes, and a -80 rectifier.

This receiver has automatic volume control, and a tuning meter to increase the ease of accurate tuning.

Installation Notes

The sensitivity of this receiver is about the same as that of Model 121-1. It may, therefore, be used with an antenna of moderate size.

When installing the receiver, make sure that the tubes are in their proper sockets as shown on the connection diagram in the instructions, being particularly careful to see that the -24, and -35 or -51 tubes are not interchanged.

Three phonograph terminals, marked "P", "C", and "S", are provided for use with Crosley phonograph pick-ups. Before connecting a phonograph pick-up, cut the wire between terminals "P" and "C". If the phonograph pick-up is later disconnected, these terminals should be wired together again.

Circuit

The general features of superheterodyne circuits are discussed in Crosley Service Bulletin No. 1, March 15, 1931, to which one should refer for such information.

The chassis incorporates one stage of tuned radio-frequency amplification, followed by a double tuned circuit feeding into the first detector, two stages of intermediate-frequency amplification, a second detector, a first audio amplifier stage, and a push-pull audio output stage. The second detector is of the diode type, and acts also as an automatic volume control tube.

The antenna coil and the interstage coil between the R. F. stage and the tuned selector circuit are connected so as to introduce a certain amount of capacity coupling as well as inductive coupling, as in previous Crosley Models.

Tuning Condensers

There are four units in the tuning condenser gang, one of which is shunted across the input to the R. F. tube, another of which is across the secondary of the interstage coil in the selector circuit between the R. F. and first detector tubes, a third of which is shunted across the input of the first detector tube, and the fourth of which is in the oscillator circuit.

Tuning of I. F. Stages

The primaries and secondaries of the intermediate frequency transformers between the first detector and first I. F. tubes, and between the first and second I. F. tubes are tuned by adjustable aligning condensers. An untuned intermediate-frequency transformer is used between the second I. F. stage and the second detector.

Audio Coupling

The diode detector is resistance coupled to the first audio tube, the coupling resistor serving as a volume control. From the detector grid, the coupling circuit continues through a 0.02 m. f. coupling condenser to phonograph terminal "C", whence it continues through a strap between terminals "C" and "P", not shown in the diagram, and from terminal "P" to one end of the volume control resistor, the other end of this resistor being grounded. Since the emitter of the second detector is also grounded, this completes the detector circuit. The variable contact on the volume control resistor is connected to the grid of the first audio tube, and the grounded side of the volume control resistor is connected to the first audio emitter through a 1650 ohm cathode bias resistor.

The first audio stage is coupled to the push-pull pentode output by means of a push-pull audio transformer.

Tone Control

The tone control consists of a variable resistor and a condenser connected in series between the operating grids of the two pentode output tubes. A 500,000 ohm fixed resistor is also connected between these grids.

Transformer and Filter System

The power transformer has three secondaries, one for the filament of the rectifier tube, a second for the filaments of the other tubes, and a third for the high-voltage supply. The ends of the high-voltage secondary are connected to the two plates of the rectifier tube, so as to obtain full-wave rectification.

From the rectifier filament, the high-voltage side of the plate supply circuit proceeds first to a filter system consisting of a filter choke and two filter condensers, one of 6 m.f. and the other of 12 m.f. capacity, and then continues to the speaker socket. At this point, a branch of the circuit proceeds through a 6500 ohm resistor to the screen grids of the pentode output tubes.

Speaker Connections

The speaker connections are shown in Figure 2. Inside the speaker, the positive plate supply circuit branches, one branch going to a middle tap of the output transformer and thence through the transformer primary to the plates of the pentode output tubes, and the other branch going through the speaker field and

CROSLEY RADIO CORP.

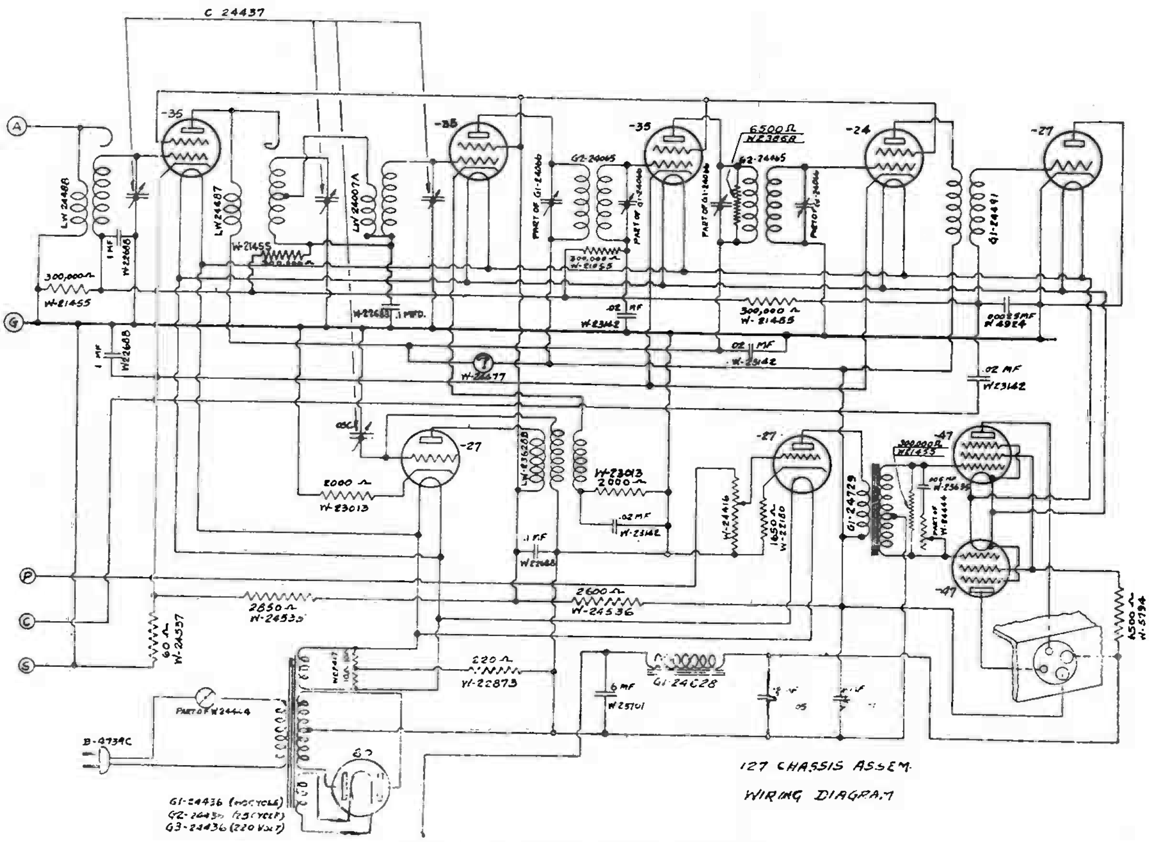

Fig. 1.—Circuit Diagram, Model 127.

thence back to the receiver. Another 6 mfd. filter condenser is connected from this point to ground.

Plate Supply Circuit

After returning to the chassis, one branch of the plate supply circuit goes directly through the primaries of the intermediate-frequency transformers to the plates of the first detector and second I. F. tubes, through the primary of the audio transformer to the plate of the first audio tube, through the tuning meter and the primary of the interstage coil to the plate of the R. F. tube, and through the tuning meter and the primary of the second tuned intermediate-frequency transformer to the plate of the first I. F. tube. A second branch of the circuit goes through a 2600 ohm screen series resistor to the screen grids of R. F., I. F., and first detector tubes, and through the oscillator coil to the plate of the oscillator tube.

From the screen series resistor, the circuit continues through a 2850 ohm screen shunt resistor to the emitters of the radio-frequency and I. F. tubes. The emitters of these tubes are connected to the chassis through a 60 ohm bias resistor.

Biasing

Biasing of the first detector tube is accomplished by connecting the emitter to the chassis, after it has passed through one of the oscillator coils, through a 2000 ohm biasing resistor. This biasing resistor is shunted by a 0.02 m.f. by-pass condenser.

The oscillator tube is biased by a 2000 ohm cathode resistor in the circuit between the emitter and ground.

Biasing of the pentode output tube is accomplished by a 220 ohm biasing resistor connected between a center tap of a 20 ohm resistor, shunted across the filaments, and ground. The center of the audio transformer secondary is connected to ground.

Grid Return Circuits

The grid circuit of the oscillator tube returns to ground. The grid circuit of the second I. F. tube is connected to the chassis. The grid circuit of the R. F. first detector, first I. F., and second detector tubes are connected to the chassis through 300,000 ohm isolating resistors and a 60,000 ohm control shunt resistor.

By-Pass Condensers

By-pass condensers of 0.1 m.f. capacity are connected between the R. F. grid circuit and ground, the first detector grid circuit and ground, and between the oscillator plate circuit and ground. By-pass condensers of 0.2 m.f. capacity are connected from the first I. F. grid circuit to chassis and from the first I. F. plate circuit to chassis. A 0.00025 m.f. condenser is connected from the second detector grid circuit to the chassis. The 0.02 m.f. condenser in the circuit to the "C" phonograph terminal is an audio coupling condenser, as previously described.

Type -24 Detector in Early Chasses

Earlier series of this chassis used a -24 type first detector tube. Connections were the same throughout, except in the tuned selector cir-

CROSLEY RADIO CORP.

cuits between the R. F. and the first detector. The grid circuit of the first detector was connected directly to the chassis, instead of through the 300,000 ohm isolating resistor and 0.1 m.f. by-pass condenser shown on the diagram. The lower end of the interstage coil secondary, coupled to the R. F. plate circuit, was connected directly to the chassis, instead of to the grid circuit of the second detector as indicated here.

Alignment of Tuning Condensers and Intermediate Frequency Amplifier

To align the tuning condensers, the same procedure should be followed as outlined in Service Bulletin No. A-2 for Model 122, except that there are three, instead of two, condensers in addition to the oscillator condenser to be aligned.

Follow the procedure outlined in the same bulletin for aligning the intermediate amplifier transformers, adjusting all four aligning condensers, one at a time.

Hum Adjustment

With properly matched output tubes, the hum level of this chassis is very low. The audio transformer shield may be rotated, after loosening the three hold-down screws, and so adjusted that the hum is reduced to a minimum. This adjustment is made at the factory and should not have to be made in the field unless it is necessary in servicing the receiver to loosen or remove the audio transformer shield. If the receiver hums, try other tubes in the output before attempting to adjust the transformer shield.

Voltage Limits

To be measured with tubes in place, speaker connected, and line voltage of 117½ (235 for 220 volt receivers). Measure plate and grid voltages with a high-resistance D. C. voltmeter (600 ohms or more per volt) from plate or grid socket contact to emitter contact. Use a low-range A. C. meter to measure filament voltages.

Filament Voltages	
All tubes but rectifier	2.3 to 2.5
Rectifier tube	4.6 to 5.0
Plate Voltages	
All tubes but second detector and pentodes	170 to 200
Second detector	0
Pentode output tubes	270 to 300
Screen Grid Voltages	
All screen grid tubes but pentodes	75 to 95
Pentode output tubes	230 to 250
Control Grid Voltages	
R. F. and I. F. amplifiers	2 5 to 3.5
First detector	6 to 10
Oscillator	8 to 12
First A. F. amplifier	8 to 12
Pentode output tubes	14 to 18

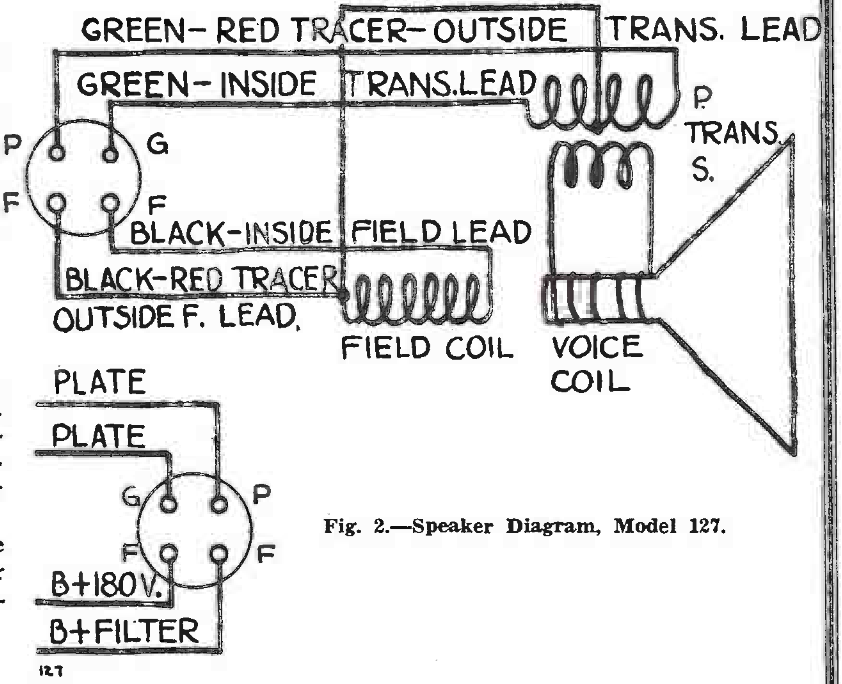

Fig. 2.—Speaker Diagram, Model 127.

Qty.	Parts No.	Description	List Price Each
1	D-24442A	Chassis	.80
1	G1-23800	Four Prong Socket (Spk.)	.15
1	G2-23800	Five Prong Socket ('24)	.15
3	G3-23800	Five Prong Socket ('27)	.15
3	G4-23800	Five Prong Socket ('35)	.15
2	G5-23800	Five Prong Socket ('47)	.15
1	G6-23800	Four Prong Socket ('80)	.15
1	G1-23629	Cond. Brkt. Assy.	.05
1	LW-20266C	Terminal Board (P. C. S.)	.15
1	LW-20264D	Terminal Board (A & G)	.10
1	G1-24393	Junction Block	.05
1	LB-24446	R. F. Coil Group Assy.	3.75
1	LW-24488	Antenna Coil Assy.	.60
1	LW-24487	Interstage Coil Assy.	.80
1	LW-23628B	Oscillator Coil Assy.	.75
1	LW-24007A	Coupling Coil Assy.	.75
4	LW-22374	Shield Assy.	.15
1	W-24447	Mounting Plate	.10
1	C-24437	Variable Condenser	5.50
2	G2-23623	Tube Connection Assy.	.05
1	W-22221	Dial Lamp	.15
1	C-24440	Bottom	.15
1	LW-23600	Light Bracket Assy.	.15
1	G1-23686	Dial Drive Assy.	.50
1	G1-24436	Power Transformer (60 Cy. 110 V.)	5.00
	G2-24436	Power Transformer (25 Cy. 110 V.)	6.50
	G3-24436	Power Transformer (25 Cy. 220 V.)	6.50
2	LW-22362	Tube Shield Assy.	.15
2	G2-24065	I. F. Coil Assy.	.60
2	G1-24066	I. F. Condenser Assy.	.30
1	G1-24491	I. F. Coil	.30
1	W-24416	Volume Control	.70
1	W-24444	Tone Control & Switch	1.00
1	B-4739C	Cable	.30
1	W-24511	Shield	.05
1	W-24477A	Panel Meter	2.00
1	G1-24628	Filter Choke Assy.	1.25
1	W-24476A	Meter Bracket	.05
1	G1-24729	A. F. Transformer	2.00
		RESISTANCES	
1	W-22417	(10-10) Ohms	.15
1	W-22180	1650 Ohms	.25
1	W-22873	220 Ohms	.25
1	W-24537	60 Ohms	.25
1	W-24535	2850 Ohms	.25
1	W-24536	2600 Ohms	.25
1	W-5704	6500 Ohms	.25
1	W-23868	6500 Ohms	.25
2	W-23013	2000 Ohms	.25
5	W-21455	300,000 Ohms	.25
		CONDENSERS	
2	W-23701	6 Mfd.	1.00
1	W-23705	12 Mfd.	1.25
1	W-4924	.00025 Mfd.	.25
1	W-23635	.006 Mfd.	.25
4	W-23142	.02 Mfd.	.25
4	W-22088	.1 Mfd.	.25
		SHIPPING LIST	
1	C-24452A	Tube & Cond. Shield	.25
1	LB-21932C	Tennaboard Assy.	.15
2	W-22300	Knob	.15
1	W-24556	Knob	.15
	LC-24484	301M Speaker (Magnavox)	8.50
	LC-22982B	304J Speaker (Jensen)	10.00
	L-24461	1Q Cabinet Assembly	8.00
	L-24462	I. T. Cabinet Assembly	36.50

CROSLEY RADIO CORP.

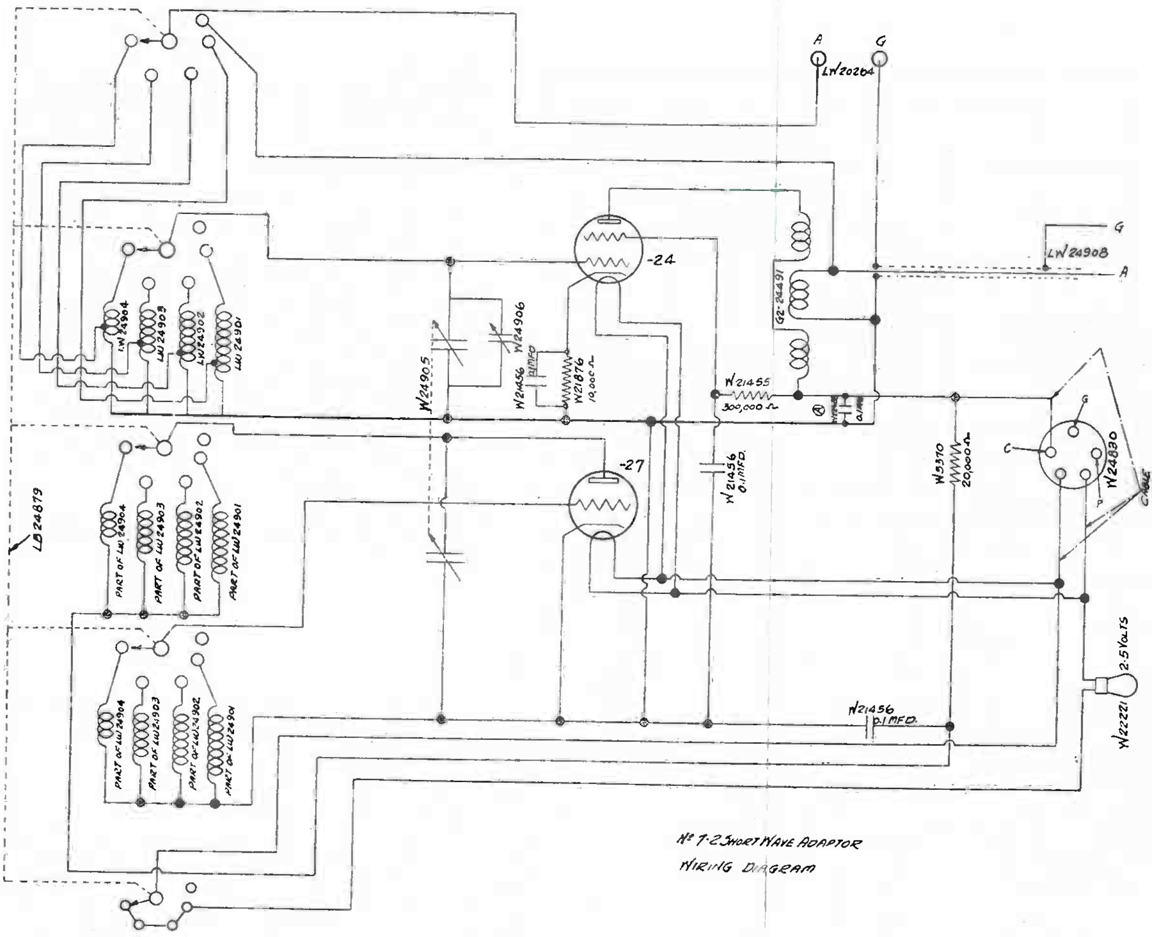

Circuit Diagram, Model 7-2

Model 7-1

Model 7-1 is a short-wave converter similar in general operation to Model 7, which has been described previously, but incorporating one less tube and having a tuned antenna circuit.

The tubes are as follows: a -24 first detector, a -27 oscillator, and a -80 rectifier.

Two sets of frequency range coils are required, one for the antenna circuit and one for the oscillator circuit. The antenna coils have four prongs and the oscillator coils five prongs. The frequency ranges obtainable with these pairs of coils are given in the instructions accompanying the receiver.

Model 7-2

This is a short wave adapter without a power pact which obtains its power from the broadcast receiver. Instead of plug-in frequency change coils, the desired frequency range being obtained by choosing the proper switch setting. There are five switch positions, four of which are for short-wave reception, and the fifth for operating the ordinary broadcast receiver.

Two tubes are used, a -27 oscillator and a -24 detector.

The adapter is for use only with receivers having pentode output tubes. On the end of the adapter power cable is a plug. One of the pentode output tubes is removed from the receiver, the adapter power cable plug is inserted in the pentode socket, and the pentode tube is inserted in the plug.

The tuning condensers are operated by a single dial.

The tube voltages depend to a certain extent upon the receiver with which the adapter is used. It is therefore not practicable to give them here.

Voltage Limits, Model 7-1

The following tube voltages are the approximate values which should be obtained with tubes in place and receiver connected to a 117½ volt line, using a voltmeter of 1000 ohms resistance per volt.

Filament Voltages	
Detector and oscillator tubes	2.3 to 2.7
Rectifier tube	4.5 to 5.5
Plate Voltages	
Detector tube	150 to 190
Oscillator tube	90 to 110
Grid Voltages	
Detector tube	3 to 5
Screen-Grid Voltage	
Detector tube	85 to 105

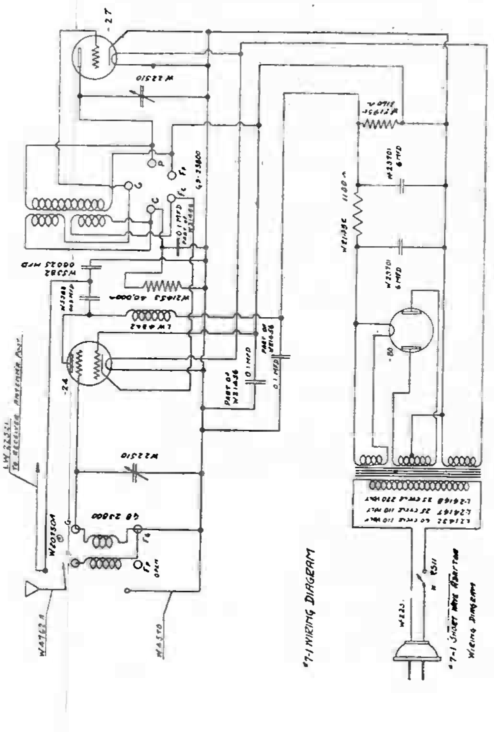

Circuit Diagram, Model 7-1

DE FOREST CROSLEY, Ltd.

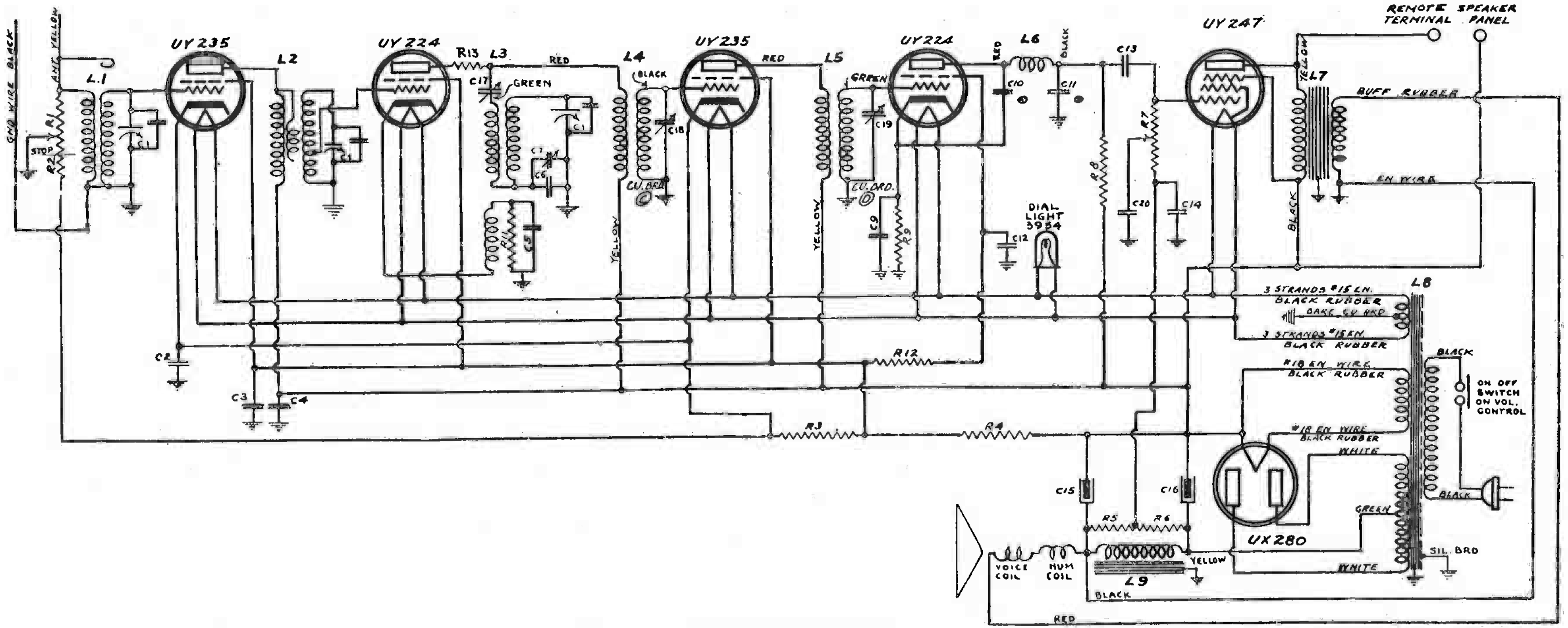

ILLUSTRATION 5.
TYPES 500 - 501 CHASSIS—CIRCUIT DIAGRAM.

Symbol	Description	Part No.
C1	Tuning Condenser Gang (3)	5286
C2	.05 Mfd. R. F. cathode by-pass condenser	5240
C3	1.0 Mfd. R. F. screen by-pass condenser	5299
C4	.05 Mfd. R. F. plate by-pass condenser	5302
C5	.0005 Mfd. Osc. cathode by-pass condenser	5321
C6	.00065 Mfd. Osc. padding condenser	5368
C7	Osc. var. padding condenser	5370
C9	.75 Mfd. Det. cathode by-pass condenser	5307
C10	.0005 Mfd. Det. plate by-pass condenser	5336
C11	.0005 Mfd. Det. plate by-pass condenser	5336
*C11	.00025 Mfd. Det. plate by-pass condenser	1496
C12	.1 Mfd. Det. screen by-pass condenser	5360
C13	.05 Mfd. A. F. coupling condenser	5302
C14	.1 Mfd. A. F. bias by-pass condenser.	5315
C15	8.0 Mfd. Electrolytic filter condenser	4560
C16	8.0 Mfd. Electrolytic filter condenser	4560
C17	I. F. aligning condenser	See L4-5
C18	I. F. aligning condenser	
C19	I. F. aligning condenser	
C20	.007 Mfd. Tone control condenser	5314
L1	Antenna coupling transformer	5417
L2	R. F. interstage transformer	5416
L3	R. F. oscillator transformer	5462
L4	I. F. interstage transformer	5365
L5	I. F. interstage transformer	5366
L6	R. F. detector plate choke	5332
L7	A. F. output transformer	5338
L8	Power transformer (Universal)	5335
L9	Speaker field coil (pot)	5397
**R1	10,000 ohm Vol. cont. resistor	6003
**R2	157 ohm Min. bias resistor	6003
R3	21,600 ohm Voltage dividing resistor	5295
R4	21,000 ohm Voltage dividing resistor	5296
R5	158,000 ohm Voltage dividing resistor (bias)	5297
R6	1,000,000 ohm Voltage dividing resistor (bias)	5298
R7	400,000 ohm Tone cont. resistor	5300
R8	350,000 ohm Det. plate resistor	5334
R9	35,000 ohm Det. bias resistor	5301
R11	7,700 ohm Osc. bias resistor	5303
R12	250,000 ohm Det. screen resistor	5304
R13	1,000 ohm Osc. plate resistor	5888

* Used in 500 chassis of "Ballad" console in place of C11 Part No. 5336.

** First releases used wire wound vol. control R1, Part No. 5364 and separate min. bias resistor R2, Part No. 5313. (See Illustration 3). Later releases use R1-2 combined in vol. control assembly Part No. 6003.

DE FOREST CROSLEY, Ltd.

Observed Voltage and Current Readings*

(Type 500 and 501 Chassis)

235 R. F. AMPLIFIER (1550-540 kc.)			
Heater Volts	(Ef)	(a)	2.2 a.c.
Plate Volts	(Ep)	(a)	225-250
Plate Current	(Ip)	(a) (c)	0.10-7 mils
Screen Grid Volts	(Esg)	(a)	75-80
Screen Grid Current	(Isg)	(a)	Not more than 1/3 of Ip
Control Grid Volts	(Ecg)	(a) (c)	3-45
Cathode Volts	(Ek)	(a) (c) (b)	3-45
224 AUTODYNE (Det.-Osc.)			
Heater Volts	(Ef)	(a)	2.2 a.c.
Plate Volts	(Ep)	(a)	225-250
Plate Current	(Ip)	(a)	0.5-0.6 mils
Screen Grid Volts	(Esg)	(a)	75-80
Screen Grid Current	(Isg)	(a)	0.1-0.125 mils
Control Grid Volts	(Ecg)	(a) (c)	10-16
Cathode Volts	(Ek)	(a) (b)	5-10
235 I. F. AMPLIFIER (175 kc.)			
Heater Volts	(Ef)	(a)	2.2 a.c.
Plate Volts	(Ep)	(a)	225-250
Plate Current	(Ip)	(a) (c)	0.10-7 mils
Screen Grid Volts	(Esg)	(a)	75-80
Screen Grid Current	(Isg)	(a)	Not more than 1/3 of Ip
Control Grid Volts	(Ecg)	(a) (c)	3-45
Cathode Volts	(Ek)	(a) (b) (c)	3-45
224 DETECTOR (2nd-175 kc.)			
Heater Volts	(Ef)	(a)	2.2 a.c.
Plate Volts	(Ep)	(a) (g)	90-100
Plate Current	(Ip)	(a)	0.25-0.45 mils
Screen Grid Volts	(Esg)	(a) (h)	60-75
Screen Grid Current	(Isg)	(a)	Not more than 1/3 of Ip
Control Grid Volts	(Ecg)	(a)	10-14
Cathode Volts	(Ek)	(a) (b)	10-14
247 OUTPUT AMPLIFIER (Pentode)			
Filament Volts	(Ef)	(a)	2.2 a.c.
Plate Volts	(Ep)	(a)	200-225
Plate Current	(Ip)	(a)	35-40 mils
Screen Volts	(Esg)	(a)	225-250
Screen Current	(Isg)	(a)	5-10 mils
Control Grid Volts	(Ecg)	(a) (d)	Indication only
280 RECTIFIER			
Filament Volts	(Ef)	(a)	4.3-4.7 a.c.
Plate Volts	(Ep)	(e)	300-325 a.c.
Plate Current	(Ip)	(a) (f)	25-30 mils
PRIMARY DRAIN			
120 Volts 25 Cycles		(c)	63 Watts
120 Volts 60 Cycles		(c)	56 Watts

* *IMPORTANT*: The following table is in explanation of symbols preceding voltage and current figures.

Because of the variation in the methods of obtaining readings with all types of analyzers at present available, care must be exercised in comparing values given against actual observations. Values of plate, screen and grid voltage supplied are measured from plate, screen and grid to cathode or filament. Under this condition the use of cathode biasing resistances makes the voltage drop across this resistance additive to the actual plate or screen voltages. These observed values are for reference only and small variations are in order. *The line voltage should wherever possible be held at 120. The volume control should be set for maximum.* For all D. C. readings use only a high resistance meter (1000 ohms per volt).

(a) Read with tube in analyzer and analyzer adapter in tube socket of chassis.
(b) Read as positive (+) cathode volts.
(c) Varies with setting of volume control.
(d) Actually 16.5 volts. Value of R7 will not allow reading at socket. Use plate voltage current as indication of correct control grid voltage.
(e) Read between each plate pin of UX 280 and "yellow" speaker lead. (All tubes in position and operating).
(f) Each plate of UX 280 — making total of 50-60 mils.
(g) Actually 165 volts. Drop across R8 due to meter load reduces to observed value.
(h) Actually 80.5 volts. Drop across R12 due to meter load reduces to observed value.

DE FOREST CROSLEY, Ltd.

Data on the Types 500 and 501 Chassis—Cont'd.

REMOVING ASSEMBLIES

The following suggestions are given when adjustments necessitate removal of some assemblies. Always remove tubes, disconnect speaker and remove chassis base shield as first operation.

POWER TRANSFORMER (L8)

(1) Place chassis "bottom up" on bench.
(2) Note position and code of lead wires.
(3) Unsolder (do not cut) lead wires from points of contact.
(4) Using heavy pliers, straighten clamping lugs.
(5) Turn chassis "top up" and pry transformer assembly loose.

When installing new assembly ensure that clamping lugs hold unit securely to chassis.

GANG CONDENSER (C1)

(1) Remove tuning drive assembly.
(2) Remove dial scale assembly.
(3) Unsolder and disconnect stator plate leads at R. F. transformer lugs.
(4) Dismount dial light assembly.
(5) Back out and remove gang mounting screws.
(6) Drop gang assembly down out of position.

Always check alignment after re-installing new gang or original assembly.

DIAL SCALE AND DRIVE

(1) Lay rule across face of dial scale frame bisecting gang shaft. Draw a line with crayon. This will assist in re-locating dial.
(2) Slacken off nut of tuning drive.
(3) Slacken off set screws in dial scale collar.
(4) Remove dial scale assembly.
(5) Remove tuning drive assembly.

The pressure between rubber on drive and the scale assembly may be increased or decreased as desired, either to take care of wear or to obtain desired amount of tuning stiffness.

FILTER CONDENSERS (C15-16)

(1) Remove small terminal nut and lift terminal lugs out of position. (Do not disconnect leads).
(2) Remove large clamping nut and locking washer.
(3) Lift condenser out of position.

As C16 is insulated from chassis, the insulating and contact washers must be carefully replaced when remounting condenser assembly.

OUTPUT TRANSFORMER (L7)

(1) Note positions and color code of leads.
(2) Unsolder (do not cut) lead wires from points of contact.
(3) Slack off and remove mounting screws.
(4) Lift assembly out of position.

INT. FREQUENCY TRANSFORMERS (L4-5)

(1) Unsolder clips from control grid leads.
(2) Lift and straighten shield lugs.
(3) Remove shield.
(4) Unsolder and disconnect lead wires from nearest point of contact.
(5) Back out and remove assembly mounting screws.
(6) Lift transformer assembly out of position.

Re-alignment is absolutely essential following installation of a new transformer assembly.

RADIO FREQUENCY TRANSFORMERS (L1-2-3)

(1) Unsolder clips from control grid leads.
(2) Lift and straighten shield lugs.
(3) Remove shield.
(4) Unsolder (do not cut) lead wires at lugs.
(5) Remove mounting nuts.
(6) Lift transformer assembly out of position.

Re-alignment is essential following change of any or all R. F. transformer assemblies.

VOLUME CONTROL (R1-2)

(1) Unsolder leads to volume control.
(2) Unsolder and disconnect switch leads at terminal panel.
(3) Back off and remove clamping nut.
(4) Lift volume control assembly out of position.

Fishpaper insulator under volume control assembly should always be in place to guard against accidental grounding of terminal lugs.

BY-PASS ASSEMBLIES AND SOCKETS (RIVETTED)

Certain of the by-pass condensers are rivetted to chassis. The rivets may be cut out with a No. 18 twist drill allowing removal of assemblies. Replacement units may be remounted by means of small nuts and bolts or drive screws. Tube sockets are also removed in same manner.

TONE CONTROL (R7)

Use the method covered under heading "Volume Control" (R1-2).

DIAL LIGHT ASSEMBLY

(1) Unsolder and disconnect lead wires at socket lugs.
(2) Remove bulb.
(3) Back out and remove mounting screw.
(4) Lift assembly out of position.

Be careful of accidental grounds on dial light circuit which may drop filament volts throughout chassis and cause power transformer to overheat.

COLOR CODE ASSEMBLY LEADS

The following identification of assembly lead wires and points of connection will serve to augment that shown in circuit illustration and also gives alternative coding used in some chassis. Alternative coding shown in parenthesis thus:—(copper braid).

ITEM	CODED	CONNECTS TO
INPUT LEADS		
Antenna	Yellow	Lug on L1 with dark blue volume control lead.
Ground	Black	Ground lug on chassis with lug of L1.
VOLUME CONTROL (R1-2) AND SWITCH (2nd Release. No. 6003)		
Left lug	Light Blue	Cathode contacts of R. F. and I. F. sockets with lead of C2.
Center lug	Black	Ground lug on chassis with lead of C2.
Right lug	Dark Blue	Lug on L1 with ant. yellow lead.

ITEM	CODED	CONNECTS TO
VOLUME CONTROL (R1) AND SWITCH (1st Release. No. 5364)		
Left lug	Similar to foregoing except that lugs point towards top of chassis instead of bottom. Also blue wire from left lug connects to R2.	
Center lug		
Right lug		
SCREEN BY-PASS COND. (C3)		
Lead	Green	Screen terminal of R. F. sockets.
Container	—	Chassis.
PLATE BY-PASS COND. (C4)		
Lead	Tin. Copper	Grounded lug on chassis.
Lead	Tin. Copper	Primary lug of L2 with red lead from C15.

DE FOREST CROSLEY, Ltd.

DATA ON THE TYPES 500 and 501 CHASSIS

ITEM	CODED	CONNECTS TO
I. F. TRANSFORMER (L4)		
Lead (Sec.)	Black (Blue)	Control grid clip for 235 I. F. amplifier.
Lead (Pri.)	Red (White)	Terminal assembly with R13.
Lead	Green	Primary lug on L3.
Lead (Pri.)	Yellow spaghetti	Lug on C15.
I. F. TRANSFORMER (L5)		
Lead (Sec.)	Green (Blue)	Control grid clip for 224 - 2nd detector.
Lead (Pri.)	Red spaghetti	Plate terminal of 235 I. F. amplifier socket.
Lead (Pri.)	Yellow spaghetti	Lug on C15.
R. F. CHOKE (L6)		
Lead	Red (Black)	Plate terminal of 224 - 2nd detector socket.
Lead	Black (White)	Terminal of R8.
CATHODE BY-PASS COND. (C9)		
Lead	Black	Cathode terminal of 224 - 2nd detector socket with R9.
Container	—	Chassis.
SCREEN BY-PASS COND. (C12)		
Lead	Tin. Copper	Screen terminal of 224 - 2nd detector socket with R12.
Lead	Tin. Copper	Grounded lug on chassis with grounded lug of L2.

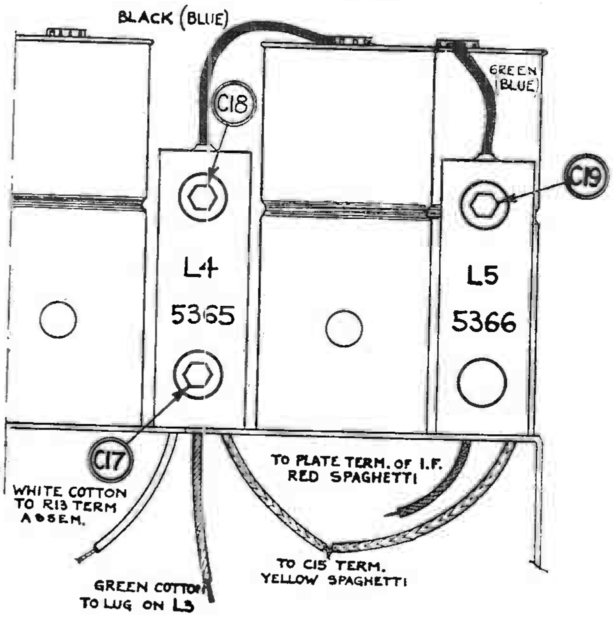

ILLUSTRATION 6.

Showing Color Code of I. F. Transformer Assemblies L4-5.

ITEM	CODED	CONNECTS TO
OUTPUT TRANSFORMER (L7)		
Lead (Pri.)	Yellow	Plate terminal of 247 socket with lead to ext. speaker terminal.
Lead (Pri.)	Black	Screen terminal of 247 socket with red (B+) lead.
Lead (Sec.)	Buff rubber	Terminal lug on chassis with red (blue) speaker lead.
Lead (Sec.)	En. Copper	Grounded lug on chassis with black speaker lead.
POWER TRANSFORMER (L8)		
Lead (Pri.)	Black	Terminal panel lug with line cord lead.
Lead (Pri.)	Black	Terminal panel lug with switch lead.
Lead (Fil. 280)	Black rubber No. 18 En. Copper	Filament terminal of 280 socket.
Lead (Fil. 280)	Black rubber No. 18 En. Copper	Filament terminal of 280 socket.
Lead (Fil. 247 etc.)	Black rubber, 3-No. 18 En. Copper	Filament terminal of 247 socket.
Lead (Fil. 247 etc.)	Black rubber, 3-No. 18 En. Copper	Filament terminal of 247 socket.
Lead (H. V. Sec.)	White (Yellow)	Plate terminal of 280 socket.
Lead (H. V. Sec.)	White (Yellow)	Plate terminal of 280 socket.
Lead (Tap. Sec.)	Green	Container terminal of C16 with R6.
Braid (Shield)	Tinned	Grounded lug on chassis.
Braid (Tap 247)	Copper (Tinned)	Grounded lug on chassis.
TONE CONTROL (R7)		
Left lug	White (with C14)	Junction of R5-6.
Center lug	—	C20.
Right lug	White	Grid terminal of 247 socket.
SPEAKER (L9). See Illustration 16.		
Lead (field)	Yellow	Yellow chassis lead.
Terminal (on frame, junction of field and hum coils)	—	Black chassis lead.
Terminal (insulated)	Red (Blue)	Chassis lead.

COLOR CODE RESISTORS

A standard color code for determination of resistor value has recently been introduced. For ease of identification, all fixed resistors used in the 500 and 501 chassis are listed together with value, symbol and code.

		CODED		
Value	*Symbol*	*Body*	*Tip*	*Dot*
21,600 ohms	R3	Red	Brown	Orange
21,000 "	R4	Red	Brown	Orange
158,000 "	R5	Brown	Blue	Yellow
1,000,000 "	R6	Brown	Black	Green
350,000 "	R8	Orange	Green	Green
35,000 "	R9	Orange	Green	Yellow
7,700 "	R11	Mauve	Mauve	Red
250,000 "	R12	Red	Green	Yellow
1,000 "	R13	Brown	Black	Red

DE FOREST CROSLEY, Ltd.

CONTINUITY AND RESISTANCE TESTS---TYPES 500 and 501 CHASSIS

Continuity tests should be made with an accurate ohmmeter. Unless otherwise specified volume control should be set as for maximum signal. Always connect negative (–) lead of ohmmeter to chassis when testing. Failure to observe this may result in improper (variable) readings due to leakage through electrolytic filter condensers. The symbol "*" indicates readings obtained by variation of the volume control.

TEST BETWEEN	PARTS TESTED	APPROX. RESISTANCE	INCORRECT READING INDICATES	PROBABLE CONDITION OF RECEPTION
Antenna (Yellow) and Ground (Black) leads.	Primary of L1	*5 ohms	Higher resistance—open primary L1	Weak and hissy—Poor volume control action.
Control grid clips of R. F. and Autodyne stages and chassis	Secondary of L1 and L2	Zero	No reading—open sec. of L1 or 2	Weak and hissy—no aligning peak that stage.
Plate contacts of R. F. and Autodyne sockets	Primaries of L2 and 4	170 ohms	No reading—open prim. of L2 or 4	Inoperative.
Plate contacts of R. F. and Autodyne sockets and chassis	Primaries of L2 and 4. Also C4 and 16	60,000 ohms	70 ohm reading—shorted C16 or —shorted C4 0-60 ohms—grounded primaries of L2, 4	280 overheats and low plate volts all stages. Inoperative.
Screen contacts of R. F. Autodyne and I. F. sockets and chassis	C3, R3	*22000-30000 ohms	Zero ohms—shorted C3 No reading—open R3 or wiring	No screen volts, inoperative. Inoperative—no screen volts.
Cathode contacts of R. F. and I. F. sockets and chassis	C2, R2 and 1	*10000-250 ohms	Zero ohms—shorted C2 or grounded R2 No reading—open R1 or 2	Poor volume control action. Inoperative.
Cathode contact of Autodyne socket and chassis	Cathode winding of L3, R11 and C5	7700 ohms	Zero ohms—shorted C5 or grounded R11 No reading—open R11 or cathode winding of L3	Weak and distorted. Inoperative.
Grid clips of I. F. and 2nd detector and chassis	Secondaries of L4 and 5	110 ohms	Zero ohms—shorted C18 or 19 No reading—open secondaries L4 or 5	Inoperative. Inoperative.
Cathode contact of 2nd detector socket and chassis	R9 and C9	35000 ohms	Zero ohms—shorted C9 No reading—open R9	Distortion. Weak and hum.
Screen contact of 2nd detector socket and chassis	R12 and C12	Infinity (Ind. only)	Zero ohms—shorted C12 No reading—open R12	No screen volts—weak. No screen volts—inoperative.
Plate contact of 2nd detector socket and chassis	C10, 11 and L6	Infinity (Indication only)	No reading—open L6 or R8 Zero ohms—shorted C10, 11 or grounded L6	No plate volts—inoperative. Low or no plate volts—weak or inoperative.
Plate contact of 2nd detector and grid contact of 247 socket	C13	Slight kick only	Zero ohms—shorted C13 No indication—open C13	Inoperative-excessive plate current 247 Weak—no lows reproduced.
Grid contact of 247 socket and chassis.	R7 and C20 C14	Infinity	If reading obtained as tone control varied—shorted C20 or grounded R7. If C14 shorted	Distorted—overloads easily. Excessive hum and no bias 247. Also excessive plate current 247. Inoperative—no volts plate 247.
Extension speaker terminals	Primary of L7	5000 ohms	No reading—open primary of L7	Tube will not light.
Heater contacts of all sockets (except 280)	Fil. secondary of L8	Zero	No reading any socket—open wiring No reading all sockets—open winding secondary of L8	Tubes will not light (235-224-247 and dial light).
Heater contacts of any socket (except 280) and chassis	Center tap of fil. secondary	Zero	No reading—open center tap	Hum—distortion.
Filament contacts 280 socket	280 fil. secondary of L8	Zero	No reading—open winding.	280 will not light.

DE FOREST CROSLEY, Ltd.

Data on the Types 500 and 501 Chassis—Cont'd.

TEST BETWEEN	PARTS TESTED	APPROX. RESISTANCE	INCORRECT READING INDICATES	PROBABLE CONDITION OF RECEPTION
Filament contact 280 socket and chassis	280 fil. secondary of L8, R4, 3, 1 also C3	*50000 ohms	Zero ohms—grounded winding 21000 ohms—R4 grounded or C3 shorted	280 gets red hot. Weak—280 overheats.
Each plate contact 280socket and yellow speaker lead	High volt. sec. of L8	200 ohms	Lower reading—shorted turns H. V. secondary of L8	Hum—power transformer (L8). Overheats—excessive watts.
Either plate contact 280 socket and chassis (Yellow speaker lead disconnected)	High volt sec. of L8	Infinity	Any reading indicates ground on H. V. secondary of L8	Inoperative—L8 overheats.
Black and yellow leads Field Coil of speaker (Chassis leads disconnected)	L9	1700 ohms	No reading—open field coil Lower reading—shorted turns L9	Inoperative. Weak—speaker distorts.
Black and Red chassis leads to speaker (Speaker disconnected)	Secondary of L7	Zero	No reading—open secondary L7	Inoperative or very weak.
Terminals of speaker (Disconnect from chassis)	Voice and hum coils	Zero	No reading—open hum or voice coil windings	Inoperative or very weak probably hum.
Contacts of line cord plug. (Operate on-off switch on vol. control)	Switch and primary of L8	10 ohms	No reading—open primary or switch. Lower reading—shorted primary turns	Inoperative. L8 will overheat. Excessive watts.

CONTINUITY TEST---VOLTAGE DISTRIBUTION CIRCUITS

TEST BETWEEN	PARTS TESTED	APPROX. RESISTANCE	INCORRECT READING INDICATES	PROBABLE CONDITION OF RECEPTION
Fil. contact 280 socket and chassis ground lead (volume control at minimum)	All resistors, condensers, and transformers in "B" supply circuits	52000 ohms	0 ohms—shorted C16 0 ohms—shorted C15 0 ohms—grounded ext. speaker terminal (B+ end) 0 ohms—shorted C4 70 ohms—grounded prim. L2 (Plate end) 130 ohms—grounded C17 (Plate end) 130 ohms—grounded L4 (Plate end) 140 ohms—grounded prim. L5 (Plate end) 550 ohms—grounded prim. L7 (Plate end) 550 ohms—grounded ext. speaker terminal (Plate end) 1100 ohms—grounded R13 (Plate end) 20000 ohms—shorted C3 39000 ohms—grounded R3 (Low end) 39000 ohms—shorted C2 40000 ohms—shorted C11 40000 ohms—grounded L6 40000 ohms—shorted C10 45000 ohms—shorted C12 45000 ohms—grounded R12 (High end)	

DE FOREST CROSLEY, Ltd.

Observed Voltage and Current Readings*

(Types 840, 850 and 853 Chassis)

235 — R. F. AMPLIFIER (1550-540 kc.)			
Heater Volts	(Ef)	(a)	2.2 a.c.
Plate Volts	(Ep)	(a)	170
Plate Current	(Ip)	(a) (c)	0.5-6 mils
Screen Grid Volts	(Esg)	(a)	75-80
Screen Grid Current	(Isg)	(a)	1.1-1.5 mils
Control Grid Volts	(Ecg)	(a) (c)	3-45
Cathode Volts	(Ek)	(a) (b) (c)	3-45
224 — AUTODYNE (Det.-Osc.)			
Heater Volts	(Ef)	(a)	2.2 a.c.
Plate Volts	(Ep)	(a)	170
Plate Current	(Ip)	(a)	0.5-0.8 mils
Screen Grid Volts	(Esg)	(a)	75-80
Screen Grid Current	(Isg)	(a)	0.1-0.125 mils
Control Grid Volts	(Ecg)	(a) (c)	4-8
Cathode Volts	(Ek)	(a) (b)	4-8
235 — I. F. AMPLIFIER (175 kc.)			
Heater Volts	(Ef)	(a)	2.2 a.c.
Plate Volts	(Ep)	(a)	170
Plate Current	(Ip)	(a) (c)	0.4-5 mils
Screen Grid Volts	(Esg)	(a)	75-80
Screen Grid Current	(Isg)	(a)	1.0-1.2 mils
Control Grid Volts	(Ecg)	(a)	3-45
Cathode Volts	(Ek)	(a) (b) (c)	3-45
227 — DETECTOR (2nd - 175 kc.)			
Heater Volts	(Ef)	(a)	2.2 a.c.
Plate Volts	(Ep)	(a)	60
Plate Current	(Ip)	(a)	5-6 mils
Grid Volts	(Eg)	(a)	Indication only
Cathode Volts	(Ek)	(a) (b)	0
227 — A. F. AMPLIFIER			
Heater Volts	(Ef)	(a)	2.2 a.c.
Plate Volts	(Ep)	(a)	80
Plate Current	(Ip)	(a)	3-5 mils
Grid Volts	(Eg)	(a) (d)	Indication only
Cathode Volts	(Ek)	(a) (b)	5-6
245 — OUTPUT AMPLIFIERS			
Filament Volts	(Ef)	(a)	2.2 a.c.
Plate Volts	(Ep)	(a)	230-250
Plate Current	(Ip)	(a)	25-40 mils
Grid Volts	(Eg)	(a)	40-45
280 — RECTIFIER			
Filament Volts	(Ef)	(a)	4.5-5 a.c.
Plate Volts	(Ep)	(e)	325-350 a.c.
Plate Current	(Ip)	(a) (f)	35-45 mils
PRIMARY DRAIN			
120 volts — 25 cycles	(Does not include clock)	(c)	103-108 watts
120 volts — 60 cycles	(Does not include clock)	(c)	98-103 watts
CLOCK DRAIN (853)			
120 volts — 25 cycles	("Carillon")		2 watts
120 volts — 60 cycles	("Carillon")		2 watts

IMPORTANT: The following table is in explanation of symbols preceding voltage and current figures.

* Because of the variation in the methods of obtaining readings with all types of analyzers at present available, care must be exercised in comparing values given against actual observations. Values of plate, screen and grid voltage supplied are measured from plate, screen and grid to cathode or filament. Under this condition the use of cathode biasing resistances makes the voltage drop across this resistance additive to the actual plate or screen voltages. These observed values are for reference only and small variations are in order. *The line voltage should wherever possible be held at 120. The volume control should be set for maximum.* For all D.C. readings use only a high resistance meter (1000 ohms per volt).

(a) Read with tube in analyzer and analyzer adapter in tube socket of chassis.
(b) Read as positive (+) cathode volts.
(c) Varies with setting of volume control.
(d) Actually 5.6 volts. Value of R5 will not allow reading at socket. Use plate current as indication of correct grid voltage.
(e) Read between each plate pin of UX 280 and chassis. (All tubes in position and operating).
(f) Each plate of UX 280 — making total of 70-90 mils.

DE FOREST CROSLEY, Ltd.

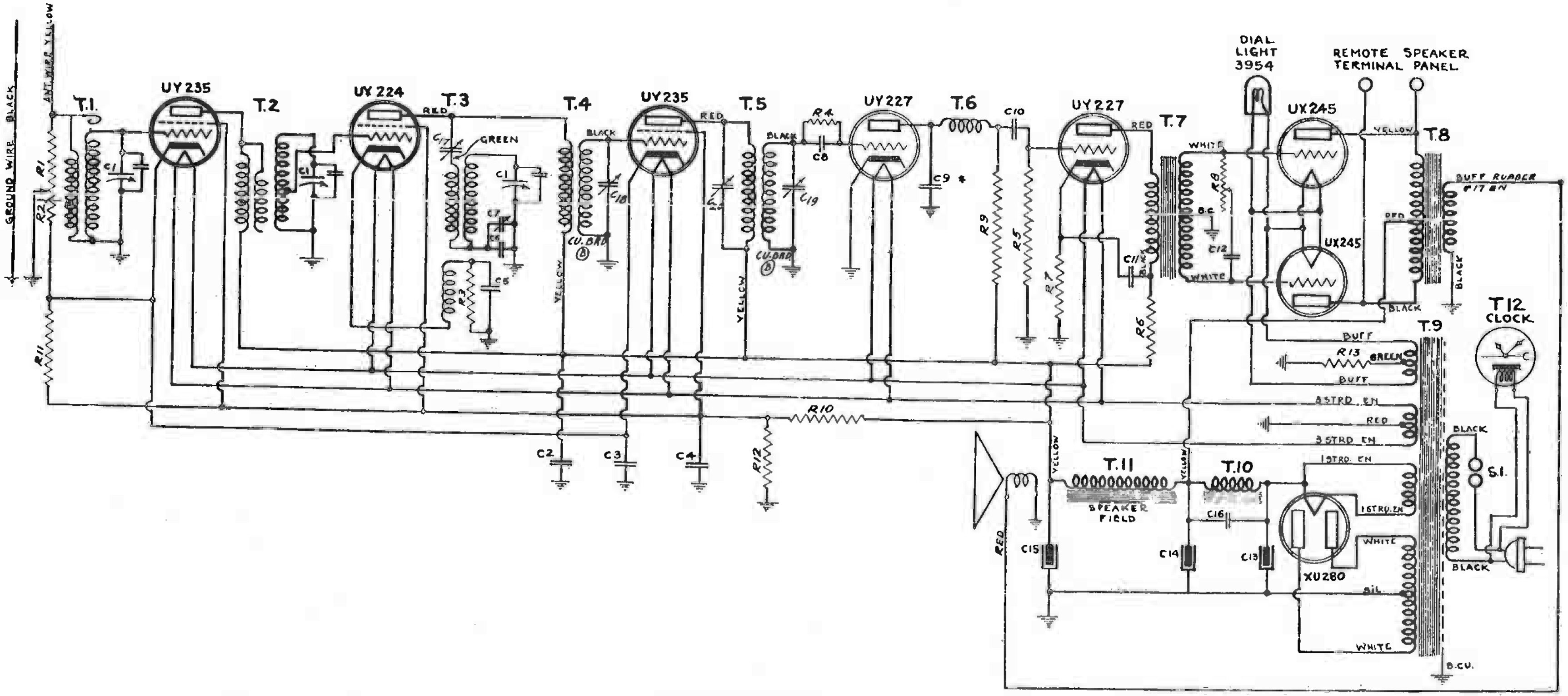

ILLUSTRATION 13.
TYPES 840 - 850 - 853 CHASSIS.
CIRCUIT DIAGRAM.

SYMBOL	DESCRIPTION	PART NO.
C1	Tuning Condenser Gang (3)	5410
C2	.25 Mfd. R.F. plate by-pass condenser	5919
C3	.05 Mfd. R.F. cathode by-pass condenser	5865
C4	.05 Mfd. R.F. screen by-pass condenser	5865
C5	.0005 Mfd. Osc. cathode by-pass condenser	5321
C6	.00065 Mfd. Osc. padding condenser	5368
C7	.0001 Mfd. Osc. var. padding condenser	5845
C8	.0001 Mfd. Det. grid condenser	5866
*C9	.0015 Mfd. Det. plate by-pass condenser	5835
C9	.01 Mfd. Det. plate by-pass condenser	5837
C10	.05 Mfd. A. F. coupling condenser	5836
C11	.25 Mfd. A. F. filter condenser	5868
C12	.002 Mfd. Tone control condenser	3992
C13	8.0 Mfd. Electrolytic filter condenser	4560
C14	8.0 Mfd. Electrolytic filter condenser	4560

SYMBOL	DESCRIPTION	PART NO.
C15	8.0 Mfd. Electrolytic filter condenser	5878
C16	.5 Mfd. filter condenser	5884
**R1	10,000 ohm Vol. Cont. resistor	6004
**R2	157 ohm. Min. bias resistor	6004
R3	7,700 ohm Osc. bias resistor	5854
R4	1,250,000 ohm Det. grid leak resistor	5840
R5	500,000 ohm A. F. grid leak resistor	5841
R6	18,000 ohm A. F. filter resistor	5861
R7	1,250 ohm A. F. bias resistor	5862
R8	1,500,000 ohm Tone Cont. resistor	5863
R9	20,000 ohm Det. plate resistor	5860
R10	4,700 ohm Voltage dividing resistor	5867
R11	15,500 ohm Voltage dividing resistor	5857
R12	8,100 ohm Bleeder resistor	5870
R13	800 ohm Output bias resistor	3572

SYMBOL	DESCRIPTION	PART NO.
S1	"On-off" switch (part of vol. cont.)	6004
T1	Antenna coupling transformer	5417
T2	R. F. interstage transformer	5416
T3	R. F. oscillator transformer	5462
T4	I. F. interstage transformer	5365
T5	I. F. interstage transformer	5852
T6	R. F. detector plate choke	5332
T7	A. F. input transformer	5855
T8	A. F. output transformer	5847
T9	Power transformer (Universal)	5843
T10	Filter choke	5876
T11	Speaker field coil (pot)	5476
***T12	Clock field winding (25 cycle) 15053 (60 cycle) 15020.	

* Used in 850-853 chassis of "Rhapsody" - "Carillon" consoles in place of C9 Part No. 5837.

** First releases used wire wound vol. control R1, Part No. 5882 and separate min. bias resistor R2, Part No. 5313. (See Illustration 11). Later releases use R1-2 combined in vol. control assembly Part No. 6004.

*** Used on 853 chassis of "Carillon" model only.

DE FOREST CROSLEY, Ltd.

Data on the Types 840, 850 and 853 Chassis—Cont'd

REMOVING ASSEMBLIES

The majority of assemblies are mounted by methods similar to those used in the types 500 and 501 chassis. See references below.

Always remove tubes, disconnect speaker and remove chassis base shield as first operation.

POWER TRANSFORMER (T9)

See details "Power Transformer" Page 12.

GANG CONDENSER (C1)

See details "Gang Condenser" Page 12.

DIAL SCALE AND DRIVE

See details on Page 12.

FILTER CONDENSERS (C13-15)

See details on Page 12.

FILTER CONDENSER (C14)

(1) Remove small terminal nut and lift terminal lugs out of position. (Do not unsolder leads).

(2) Back out two screws which tighten clamping band.

(3) Pull condenser out of position from top of chassis. (Do not remove fish paper liner).

OUTPUT TRANSFORMER (T8)

See details on Page 12.

INPUT TRANSFORMER (T7)

(1) Note points of contact and color code of leads.

(2) Unsolder lead wires (do not cut) from points of contact.

(3) Remove the four mounting screws.

(4) Lift assembly out of position.

NOTE:—It may be found more convenient to dismount assembly before unsoldering connections. When mounting replacement unit make connections first.

INT. FREQUENCY TRANSFORMERS (T4-5)

See details on Page 12.

FILTER CHOKE (T10)

(1) Dismount gang condenser assembly C1.

(2) Unsolder and disconnect choke leads from terminal of 280 socket and C14.

(3) Remove two hex. nuts from mounting screws and lift assembly out of position.

NOTE:—Complete alignment (R. F. and I. F.) is essential following any adjustment to gang condenser C1.

RADIO FREQUENCY TRANSFORMERS (T1-2)

See details Page 12.

OSC. TRANSFORMER (T3)

(1) Dismount padding condenser assembly C7.

(2) Remove hex. nuts from shield mounting screws.

(3) Remove shield.

(4) Unsolder and disconnect lead wires from transformer lugs.

(5) Remove hex. nuts from transformer mounting screws.

(6) Lift transformer assembly out of position.

Alignment of R. F. and I. F. stages is necessary following this adjustment.

OSC. PADDING CONDENSER (C7)

(1) Remove hex. mounting nuts which clamp bracket to T8.

(2) Unsolder and disconnect leads if assembly is to be completely removed.

Alignment of R. F. stages is necessary following this adjustment.

VOLUME CONTROL (R1-2)

See details Page 12.

RIVETTED ASSEMBLIES (Sockets, R7, 10, 13, etc.)

Certain condenser, resistor and socket assemblies are rivetted to chassis. The rivets may be cut out with a No. 18 twist drill. Replacements may be held in position by means of small nuts and bolts or drive screws.

TONE CONTROL (R8)

See details Page 12.

DIAL LIGHT ASSEMBLY

See details on Page 12.

DE FOREST CROSLEY, Ltd.

Data on the Types 840, 850 and 853 Chassis—Cont'd

COLOR CODE ASSEMBLY LEADS

Identification of assembly lead wires and points of connection may be determined from the following details. Alternative coding wherever used shown in parenthesis, thus —(copper braid).

ITEM	CODED	CONNECTS TO
I. F. TRANSFORMER (T5)		
Lead (Prim.)	White (Red)	Plate terminal of 235—I. F. amplifier socket.
Lead (Prim.)	Yellow	Lug. of C15
Lead (Sec.)	Blue (Black)	Lug of C8 and R4.
R. F. CHOKE (T6)		
Lead	Black	Plate terminal of 227—2nd detector socket.
Lead	White	Terminal of R9-C10.
INPUT TRANSFORMER (T7)		
Lead (Sec.)	White	Grid terminal of one 245—output socket.
Lead (Sec.)	White	Grid terminal of other 245—output socket.
Lead (Sec. Tap)	Copper Braid	Ground lug on T7 frame.
Lead (Prim.)	Red	Plate terminal of 227—A. F. amplifier socket.
Lead (Prim.)	Black	Lug on C11 with R6.

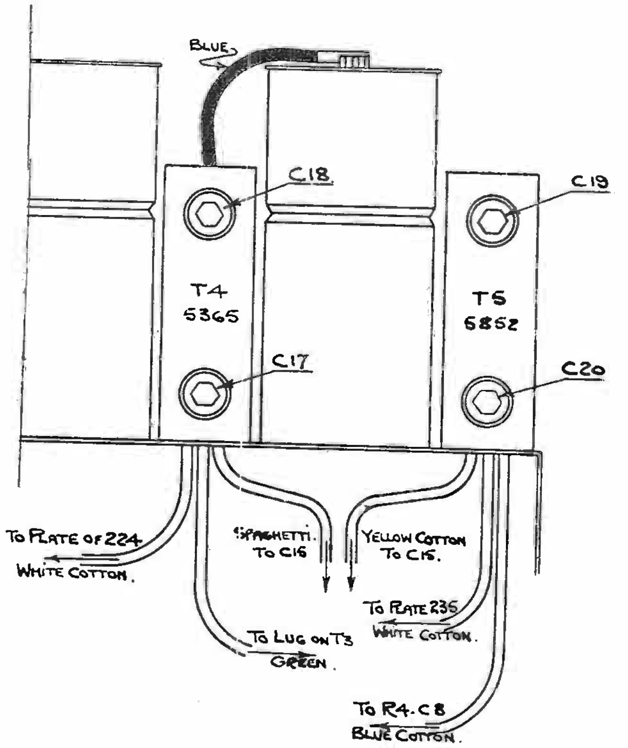

ILLUSTRATION 14.
Showing Color Code of I. F. Transformer Assemblies T4-5.

ITEM	CODED	CONNECTS TO
OUTPUT TRANSFORMER (T8)		
Lead (Prim.)	Yellow	Plate terminal of one 245—output socket.
Lead (Prim.)	Black	Plate terminal of other 245—output socket.
Lead (Prim. Tap)	Red	Lug of C14.
Lead (Sec.)	Buff rubber	Terminal lug (insulated) on chassis with red speaker lead.
Lead (Sec.)	Enamelled	Grounded lug on chassis with black speaker lead.
FILTER CONDENSER (C16)		
Lead	Black	Lug on C13.
Lead	Black	Lug on C14.

ITEM	CODED	CONNECTS TO
SPEAKER (T11)		
Lead (Field)	Yellow	Yellow lead from chassis.
Lead (Field)	Yellow (Black)	Yellow lead from chassis.
Terminal	(Grounded)	Black lead from chassis.
Terminal	(Ungrounded)	Red lead from chassis.
INPUT LEADS		
Antenna	Yellow	Lug on T1 with blue volume control lead.
Ground	Black	Ground lug on chassis with lug on T1.
VOLUME CONTROL (R1-2) AND SWITCH (2nd Release No. 6004)		
Left lug	Blue	Cathode contacts of R. F. and I. F. sockets with C3.
Center lug	Black	Grounded lug on chassis with C3.
Right lug	Blue	Lug on T1 with ant. yellow lead.
VOLUME CONTROL (R1) AND SWITCH (1st Release No. 5882)		
Left lug Center lug Right lug	Similar to above excepting that lugs point towards top of chassis instead of bottom. Also blue wire from left lug connects to R2.	
PLATE BY-PASS COND. (C2)		
Lead	Red	Primary lug of T2 with red lead from C15.
Container		Chassis.
I. F. TRANSFORMER (T4)		
Lead (Prim.)	White (Red)	Plate terminal of 224 autodyne socket.
Lead (Prim.)	Yellow Spaghetti	Lug of C15.
Lead (Sec.)	Blue (Black)	Control grid clip of 235 I. F. amplifier.
Lead	Green	Primary lug of T3.
POWER TRANSFORMER (T9)		
Lead (Fil. 245's)	Buff rubber	Fil. terminal of 245—output sockets.
Lead (Fil. 245's)	Buff rubber	Fil. terminal of 245—output sockets.
Lead (C. T. 245's)	Green	Underground lug of R13.
Lead (Fil. 227 etc.)	Black rubber, 3-No. 18 En. Copper	Heater terminal 227—A. F. socket.
Lead (Fil. 227 etc.)	Black rubber, 3-No. 18 En. Copper	Heater terminal 227—A. F. socket.
Lead (C. T. 227 etc.)	Red	Grounded lug on chassis near tone control.
Lead (Fil. 280)	Black rubber, 1-No. 18 En. Copper	Fil. terminal of 280—rectifier socket.
Lead (Fil. 280)	Black rubber, 1-No. 18 En. Copper	Fil. terminal of 280—rectifier socket.
Lead (H. V. Sec.)	White	Plate terminal 280—rectifier socket.
Lead (H. V. Sec.)	White	Plate terminal 280—rectifier socket
Lead (C. T. Sec.)	Silver braid	Grounded lug on chassis near tone control.
Lead (Shield)	Copper braid	Grounded lug on chassis near tone control.
Lead (Primary)	Black	Terminal panel lug with one line cord lead.
Lead (Primary)	Black	Terminal panel lug with one lead of S1.

COLOR CODE RESISTORS

		Coded		
Value	*Symbol*	*Body*	*Tip*	*Dot*
7,700 ohms	R3	Mauve	Mauve	Red (M)
1,250,000 "	R4	Brown	Orange	Blue (M)
500,000 "	R5	Green	Black	Yellow (M)
18,000 "	R6	Brown	Gray	Orange
1,250 "	R7	Metal Candohm		
20,000 "	R9	Red	Black	Orange
4,700 "	R10	Metal Candohm		
15,500 "	R11	Brown	Green	Orange
8,100 "	R12	Gray	Brown	Red
800 "	R13	Metal Candohm		

Candohm resistors are not coded. (M) indicates midget carbon unit.

DE FOREST CROSLEY, Ltd.

CONTINUITY AND RESISTANCE TESTS---TYPES 840, 850 and 853 CHASSIS

Continuity tests should be made with an accurate ohmmeter. Unless otherwise specified volume control should be set as for maximum signal. Always connect negative (–) lead of ohmmeter to chassis when testing. Failure to observe this may result in improper (variable) readings due to leakage through electrolytic filter condensers. The symbol "*" indicates readings obtained by variation of the volume control.

TEST BETWEEN	PARTS TESTED	APPROX. RESISTANCE	INCORRECT READING INDICATES	PROBABLE CONDITION OF RECEPTION
Antenna (Yellow) and ground (Black) leads	Primary of T1 and R1	*5-40 ohms	5-10000 ohms—open Primary T1 40 ohms—open vol. control	Weak and hissy—Poor vol. control action. No vol. control action.
Control grid clips of R.F. and Autodyne stages and chassis	Secondaries of T1 and T2	Zero	No reading—open secondary of T1 or 2	Weak and hissy—No aligning peak R.F. stage. If T2 open chassis will be dead.
Plate contacts of R.F. and Autodyne sockets	Primaries of T2 and 4	170 ohms	No reading—open primary of T2 or 4.	Inoperative—No plate voltage R.F. or Autodyne stage.
Plate contacts of R.F., I.F., and Autodyne sockets and chassis	Primaries of T2, 4 and 5. Also C2, 4 and 15	*10000 ohms	5000 ohm reading—shorted C4 70 ohm reading—shorted C2 or 15 0-200 ohm reading—grounded prim. of T2, 4 or 5.	Very weak or inoperative—plate volts low. Inoperative—280 overheats—no plate volts. Inoperative.
Screen contacts of R.F., I.F., and Autodyne sockets and chassis	C4, R10, 11, 12	*5000-6000 ohms	26000 ohm reading—open R12 0 ohms—shorted C4	Screen volts high—unstaple. Inoperative—no screen volts.
Cathode contacts of R.F. and I.F. sockets and chassis	R1, 2 and C3	*170-7000 ohms	0 ohms—shorted C3	No control of volume.
Cathode contact of Autodyne socket and chassis	Cathode winding of T3, R3, C5	7700 ohms	0 ohms—shorted C5 or grounded cathode winding of T3. No reading—open winding or open R3	Inoperative—no plate volts. " —low or no bias. " —high bias—no plate volts
Grid contact of 2nd det. socket and chassis	Sec. of T5, C8	Infinity (1.25 megs.)	110 ohms—shorted C8 If no indication of circuit—open sec. of T5 or R4	Distorts—overloads easily. Weak—distorts—grid loads.
Cathode contacts of 2nd det. socket and chassis	Cathode ground	0 ohms	No reading—open indication	Weak—overloads easily.
Plate contact of 2nd det. socket and chassis	C9, 15, 4, R9, 10, 12 also T6	30000 ohms	No reading—open T6, R9, 10 or 12 0 ohms—shorted C9 or grounded T6 23000 ohms—shorted C4 0 ohms—shorted C15 37000 ohms—R12 open or high resist.	Inoperative if T6 or R9 open. " —no det. plate volts. " —no screen volts R.F. and I.F. Inoperative—280 overheats. Unstaple in R.F.
Plate contact of 2nd det. and grid contact of A.F. socket	C10	Infinity	Any reading—shorted C10	Inoperative—high plate current A.F. tube.
Grid contact of A.F. socket and chassis	R5, C10	Indication only (500,000 ohms)	25000 ohms—shorted C10 No indication—open R5	Inoperative. Distorts—overloads easily.
Plate contact of A.F. socket and chassis	Prim. of T7, R6, C11	30000 ohms	No reading—open prim. T7, open R6, 10 or 12 2800 ohms—shorted C11 1500 ohms—grounded C11	Inoperative—open T7 or R6 no plate volts A.F. tube. Inoperative—high bias A.F. stage. " —no plate volts A.F. stage
Cathode contact of A.F. socket and chassis	R7 and C11	1250 ohms	0 ohms—grounded C11 or R7	Distorts badly—high plate current.
Grid contacts of output sockets and chassis	Sec. of T7	4500 and 5500 ohms	No reading—open section of secondary of T7	Weak and distorted.

DE FOREST CROSLEY, Ltd.

TEST BETWEEN	PARTS TESTED	APPROX. RESIST.	INCORRECT READING INDICATES	PROBABLE CONDITION OF RECEPTION
Grid contacts of output sockets	Sec. of T7, R8 and C12. (Vary tone trol)	10000 ohms	No reading—open secondary 1700-10000 ohms varying with tone control—shorted C12 6500-10000 ohms varying with tone control—grounded tone control.	Weak and distorted. Tone control reduces volume to a low level when varied. Weak—bad audio quality.
Plate contacts of output sockets and chassis (T11 disconnected)	Prim. sections of T8 T10, C13, 14 and 16	Infinity (Slight indication only)	No indication—open prim. section T8 350 ohm—grounded T10 or shorted C13 150 ohm—shorted C14 (Above readings might also indicate grounded C16 or ground on 280 fil. winding of T9)	No plate volts—poor quality. 280 overheats—inoperative. 280 overheats—inoperative.
Filament contacts output sockets and chassis	Fil. (245) winding of T9, dial light circuit and R13	800 ohms	0 ohms—grounded ext. speaker terminals 0 ohms—ground on dial light Circuit—ground on high end of R13 or fil. winding grounding.	Inoperative or weak. High plate current on 245's. Bad distortion and high hum level.
Plate contacts 280 socket and chassis	Plate (H.V.) winding of T9	150 and 170 ohms (each side)	No reading—open winding that section Low reading—shorted turns that section	Low voltage—high hum level. Low voltage—hum—T9 overheats.
Filament contacts 280 socket and chassis (T11 disconnected)	(See "Plate Contacts of Output Sockets and Chassis")			
Contacts of attachment plug (S1 "Off") (853 only)	T12	3300 ohms 530 ohms	(25 cycle) No reading (60 cycle) Open clock circuit.	Clock will not operate.
Contacts of attachment plug (operate S1)	Primary of T9	10 ohms	No reading—open switch or winding	Inoperative—no fil. or plate volts.
Contacts of attachment plug and chassis (operate S1)	Primary of T9	Infinity	Any reading—grounded primary of T9.	Dangerous if ground lead removed—may blow fuses.
"Red" speaker lead and chassis (Disconnect from speaker)	Secondary of T8	Zero	No reading—open sec. of T8	Very weak—just audible.
Speaker field lead wires (Disconnect from chassis leads)	T11	2500 ohms	No reading—open field winding	Inoperative—no plate volts any stage except output tubes.
Voice coil terminals of speaker (Disconnect "red" and "black" leads)	Voice coil winding	Zero	No reading—open voice coil.	Very weak—just audible.

CONTINUITY TESTS—VOLTAGE DISTRIBUTION CIRCUITS

Filament 280 socket to chassis ground lead (Vol. control at minimum)	All resistors, condensers and transformers in "B" supply circuit	13,025 ohms	0 ohms—C16 grounded (High end) 0 ohms—T10 grounded (High end) 0 ohms—C13 shorted 200 ohms—T10 grounded (Low end) 200 ohms—T11 grounded (High end) 200 ohms—C16 grounded (Low end) 200 ohms—C14 shorted 350 ohms—Prim. of T8 grounded 2850 ohms—T11 grounded (Low end) 2900 ohms—C2 shorted 2900 ohms—C15 shorted 3000 ohms—Prim. of T2, 4 or 5 grounded 7500 ohms—C4 shorted 7500 ohms—R12 grounded (High end) 7500 ohms—R10 grounded (High end) 7500 ohms—R11 grounded (High end) 8500 ohms—R10 shorted 9400 ohms—C11 grounded 9500 ohms—C9 shorted 9500 ohms—T6 grounded 9500 ohms—Prim. of T7 grounded 9600 ohms—C11 shorted 12025 ohms—C3 shorted 12025 ohms—R11 grounded (Low end) 12025 ohms—R1, 2 grounded (High end) 30000 ohms—R12 open	

DE FOREST CROSLEY, Ltd.

ADJUSTMENTS D9, 10 SPEAKERS

The majority of dynamic speaker failures irrespective of type or manufacture are due to such conditions as the collection of dust in the voice coil assemblies or "off center" voice coils. Ordinary fluff and dust, such as collects on any article of household furniture, may appear harmless and sufficiently light in weight so as to be negligible in its collection on pole pieces and voice coil.

Unfortunately, however, it may contain metallic particles which, being of a ferrous nature, will be attracted to the pole pieces by the influence of the magnetic field that is present during periods of operation. An accumulation of these small metallic particles, over a period of time, may seriously interfere with the free action of the voice coil, as it moves in and out with a piston-like action, between the necessarily small openings of the pole piece gap.

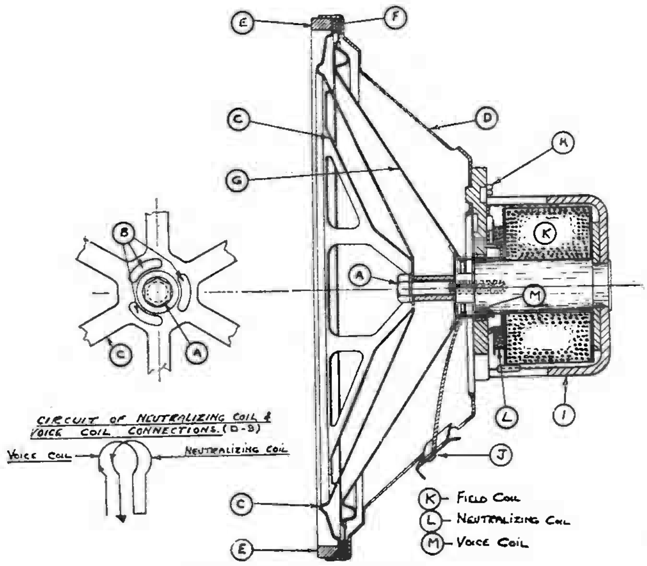

ILLUSTRATION 15.
DETAILS OF SPEAKER ADJUSTMENT.

Such speakers are usually classified as "fuzzy" in tone and may clear up or gradually become worse after continued operation.

A second condition of speaker failure is one that may be caused by mechanical damage through jars or shocks. Its characteristics are rather obvious and well defined. This type of failure is usually termed "raspy" or "blurred" and is due to the voice coil being "off center." Especially is the unsatisfactory reproduction of such units noticeable at low levels of volume and at the lower or "bass" frequencies. At times such "off center" conditions appear to introduce into the reproduction a decided ripple very much akin to modulation hum. At high levels of volume in some cases the unit may be very raspy and in others noticeable rasps or distortion may be entirely absent.

Occasionally a unit may be encountered which introduces "rattles" or "buzziness" in the reproduction. Such undesirable effects may be due to vibration of the cone surfaces, loose voice coil leads or to a loose turn of wire on the voice coil assembly. A visual inspection of these parts will usually determine the cause of the "buzz" or "rattle."

Having discussed the various types of speaker failures, the purpose of the following paragraphs is to show the adjustment methods which should be used to overcome these defects.

DISMANTLING UNITS

In following out operations for dismantling speakers refer to Illustration 15 for identification of parts referred to by symbols. Proceed as follows:—

(1) Unsolder field, voice coil and hum coil (D9 only) leads from terminal lugs (J).

(2) Remove carefully the pasteboard baffle ring (E).

(3) Using a 7/16" (or 15/32") hexagon "T" wrench carefully loosen and remove cap screw (A) and washer. (See "Parts List").

(4) Using a screw driver blade pry loose clamp grill (C) and remove.

(5) Remove cone ring (F) if present.

(6) Carefully lift cone assembly (G) out of position.

(7) Remove additional cone rings (F) if present.

(8) Turn speaker face down on bench and remove pot clamping screws (H) (if present).

(9) Holding cone frame (D) securely with one hand pull up pot assembly (I) with slight twisting motion.

NOTE:—In the type D9 speaker (500-501 chassis) a hum neutralizing coil is present in pot assembly with field coil. The poling of this is important. If improperly positioned it will not perform its function. Always note its position and lead connections before dismounting and disconnecting. Also during assembly of speaker the slots (B) in clamp grill should coincide as regards placing, with similar slots in voice coil spider.

CLEANING UNITS

If air under pressure is readily available the cleaning out of dust particles becomes somewhat simplified as an operation. Often, however, this facility is not accessible and an alternative method, using the blower attachment of any good vacuum cleaner is recommended.

Apply the air first of all around the outside of the voice coil (through frame openings) and finish by blowing out the inside of the voice coil from the front of speaker (through clamp grill openings). During the blowing out operation move the cone backwards and forwards by applying light pressure to its surfaces with the fingers. This will tend to free any particles which may be lodged between voice coil and pole pieces.

ADJUSTING UNITS

This operation is important and must be carefully carried out to secure results. Standard gauges for this adjustment are available (See "Parts List") or as alternative feeler gauges or fish paper of the correct thickness, (.010-10/1000 of an inch) may be used.

(1) Slacken off slightly the cap screw (A). Do not remove.

(2) Free the cone assembly (G) by slight pressure of the fingertips.

(3) Insert gauge (or gauges) through openings (B) pressing well down past lower edge of voice coil.

(4) Move cone assembly (G) up and down slightly to allow it to find centering position.

(5) Tighten down cap screw (A) securely. Do not force.

(6) Carefully remove gauge (or gauges).

NOTE:—If the voice coil has been warped or squeezed out of round, it will be impossible to secure proper centering. Under such conditions the cone-voice coil assembly (G) should be replaced.

DE FOREST CROSLEY, Ltd.

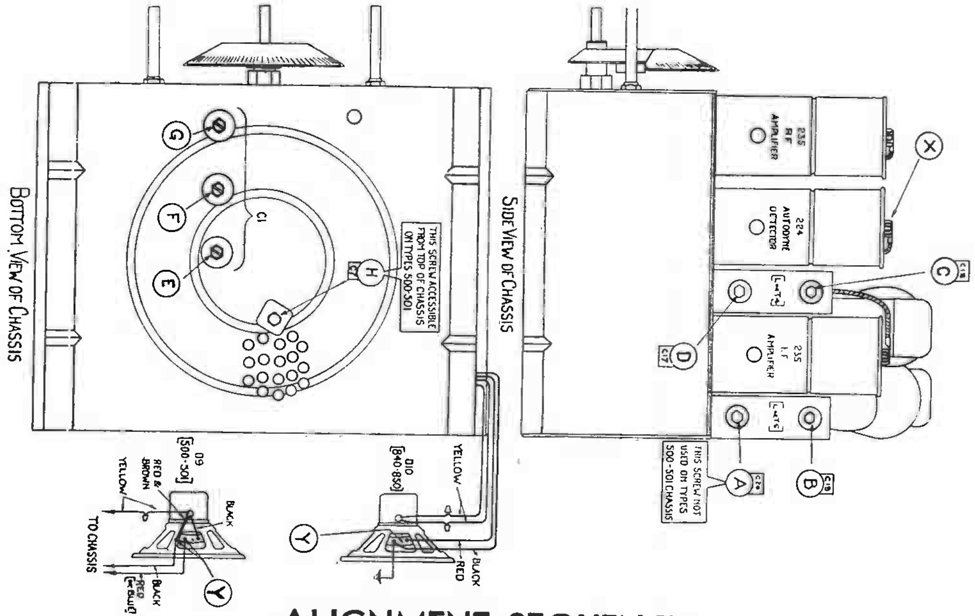

ALIGNMENT SEQUENCE

(Types 500-501-840-850-853 Chassis.)

It is essential, of course, in aligning the above mentioned chassis to have available a calibrated service oscillator capable of producing an audible signal at points throughout the broadcast band as well as at *175 kilocycles,* which is the frequency of the intermediate frequency stages.

The following is the recommended method of making alignment adjustments on the 500, 501, 840, 850 and 853 chassis and should be closely adhered to, to avoid the probability of misalignment.

(1) Connect the output meter across the voice coil terminals of the speaker. These terminate at two lugs on the speaker frame to which the chassis leads are attached. See Symbol "Y" in Illustration.

(2) Connect oscillator output lead to control grid cap of autodyne tube at point indicated by "X" in Illustration. Control grid lead should be left in position on tube. Connect shield of oscillator lead to chassis ground.

(3) Set receiver tuning at point near *550 kilocycles* which is entirely free from interference or incoming signals.

(4) Place set in operation and set volume control at maximum.

(5) Adjust service oscillator to *175 kilocycles* (exactly) and place in operation.

(6) Align adjusting screws "A", "B", "C" and "D" in that order for maximum reading on output meter. *

(7) Connect oscillator output lead to antenna wire of chassis.

(8) Adjust both receiver and oscillator in tune at *1400 kilocycles.* If difficulty is encountered in securing sufficient attenuation with service oscillator output control directly connected to antenna lead, a 100,000 ohm resistance connected in series with antenna lead will reduce the signal sufficiently.

(9) Adjust autodyne trimming condenser indicated by symbol "E" in Illustration. This condenser peaks at a point approximately three-quarters of minimum capacity setting, (i.e., the adjusting screw turned almost "full out").

(10) Align adjusting screws "F" and "G" in that order for maximum reading on output meter. "F" is the R.F. stage trimming or aligning condenser and "G" is a similar unit for adjusting the antenna stage.

(11) Adjust service oscillator and receiver in tune at *600 kilocycles.* Adjust the padding condenser "H" for maximum indication on output meter.* The tuning condenser should be varied slightly while peaking this padding condenser (H). If the gang condenser is left stationary a false peak will be obtained and the receiver will be weak at or near *550 kilocycles.*

* Always have service oscillator output at lowest possible value, which will give readable indication on output meter. When aligning I. F. stages, if sufficient attenuation is not available on service oscillator output control, the volume control of the receiver may be reduced slightly. When aligning at broadcast frequencies lack of sufficient attenuation in service oscillator output control can be overcome by inserting 100,000 ohm resistance in series between oscillator and antenna lead of receiver. As an alternative to this, the antenna lead of the receiver may be wound around the oscillator output lead instead of directly connected to it thus giving a capacitive coupling.

DELCO APPLIANCE CORP.

2 V. RECEIVER RB-B & RA-B

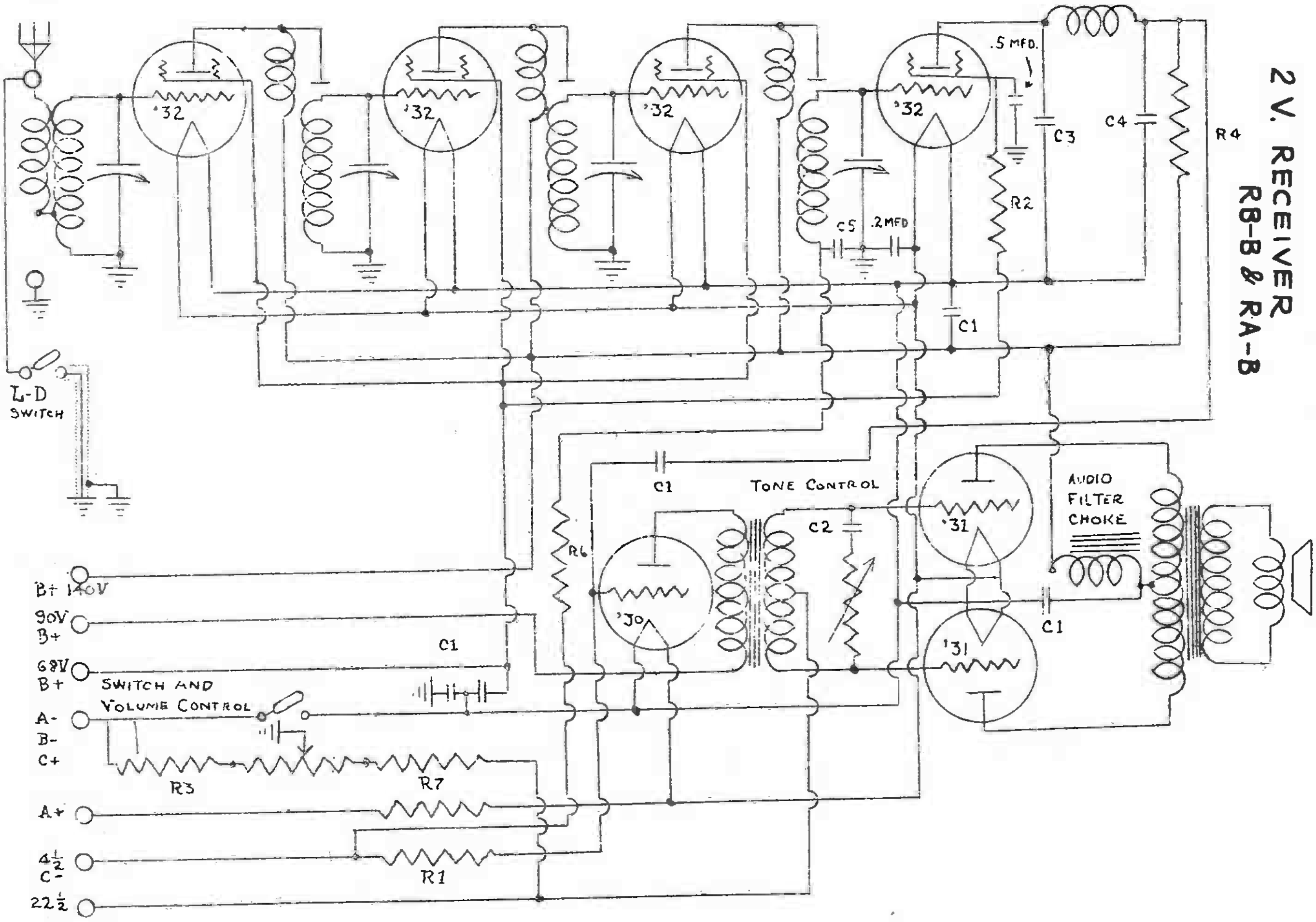

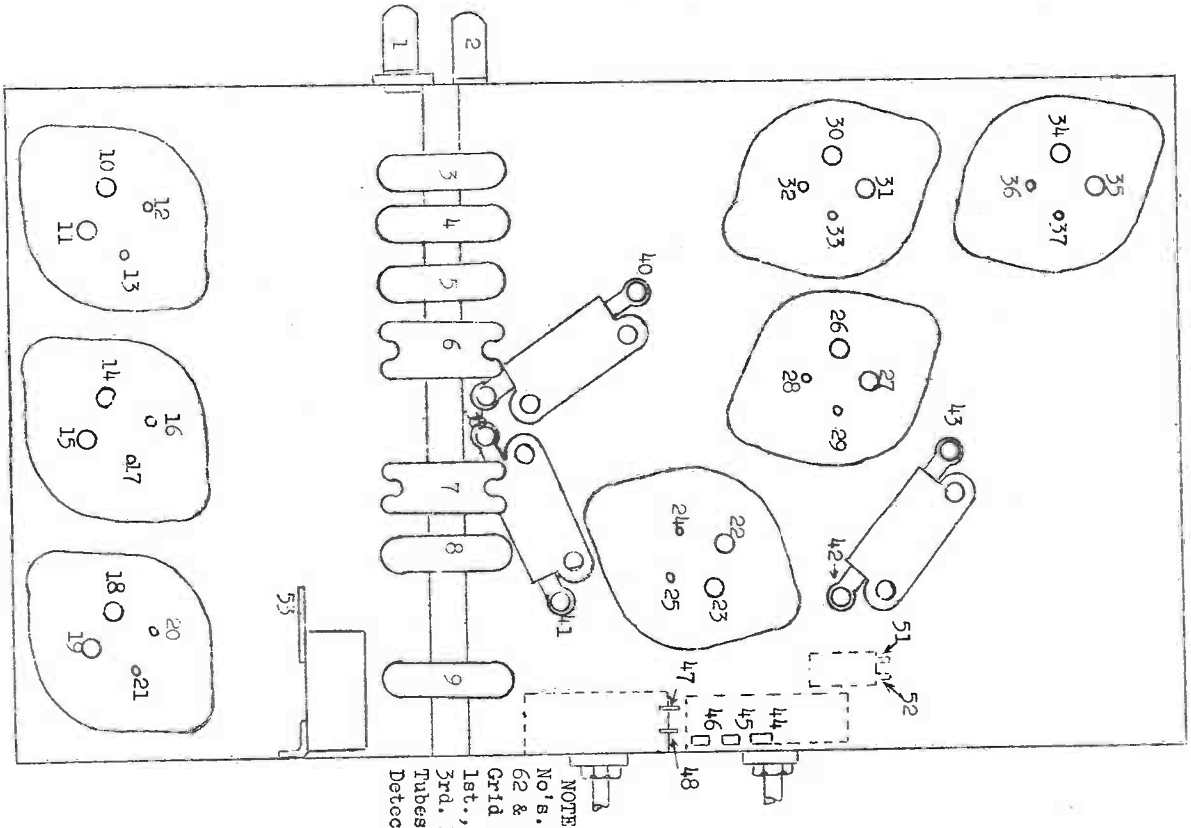

NOTE:
No's. 60, 61,
62 & 63 are
Grid Caps of
1st., 2nd., &
3rd. R.F.
Tubes and
Detector Tube

DELCO APPLIANCE CORP.

RB-B & RA-B

CIRCUIT

DESCRIPTION

The receiver comprises four capacity coupled, tuned R. F. Circuits, using four type 232 Screen Grid Tubes, three as R. F. Amplifiers and one as a power detector: a first audio stage of resistance coupled amplification, using a type 230 tube; and a last audio stage consisting of two type 231 tubes in push-pull amplification.

An output push-pull transformer mounted on the speaker frame, is used to match the impedance of the voice of the magnetic speaker to output of the power tubes. The volume control regulates the grid potential. The tone control consists of a fixed condenser and a variable resistor connected in series between the grid terminals of the two Type 231 tube sockets.

A fixed 200,000 ohm resistor is connected across the 22½ volt "C" battery to drain it gradually so that the "B" battery can be operated to a lower voltage without distortion. A part of this 200,000 Ohms is used to obtain the grid potential for the volume control.

A local and long distance switch is used which short circuits the primary of the antenna coil when in the "Local" position.

TABLE OF RESISTORS AND CONDENSERS:

RESISTORS

No.	Body	End	Band	Resistance
R 1	Red	Black	Green	2,000,000
R 2	Green	Black	Yellow	500,000
R 3	Brown	Green	Yellow	150,000
R 4	Brown	Black		100,000
R 5	Red	Green	Orange	25,000
R 6	Brown	Black	Orange	10,000
R 7	Lead from Terminal Strip to Det. Fil.			.75

CONDENSERS

Number	Capacity
C-1	1-.25-.1-.1-.01
C-2	.002
C-3	.0005
C-4	.0001
C-5	.1

Capacities of C-1 Condenser are arranged as follows:

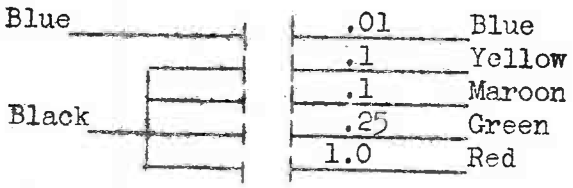

Electrical Tests

TESTING WITH SET ANALYZER:

The following chart shows the approximate readings that should be obtained with any of the more reliable makes of Set Analyzers:

Type of Tube	Position of Tube	"A" Fil. Volts	"B" Plate Volts	"C" Control Grid Volts	Screen Volts	Normal Plate MA	Grid Change
230	1st A.F.	2	90	2	72	2	2.5
231	2nd A.F.	2	135	2	72	2	2.5
231	2nd A.F.	2	135	2	72	2	2.5
232	Detector	2	10	1	35	.2	.1
232	1st R.F.	2	143	..	..	2	3.5
232	2nd R.F.	2	143	19	..	5	20
232	3rd R.F.	2	143	19	..	5	20

NOTE:

Readings obtained with Set Analyzers will vary with different instrument with variations in battery voltages; and with different tubes. Therefore, the readings shown above are only average. Each service man should compile a chart similar to the one above, using his own set analyzer, and a receiver that is known to be in proper condition.

Each Service man located in a battery set district, should have available a Type A-600 "A" battery to be used for making tests on 2 volt chassis, so that it will not be necessary for the owner of a set to return the battery with the chassis for service.

If no Type A-600 battery is available for testing, use two cells of a lead plate storage battery with a rheostat to keep the voltage below 2.6 volts. When making tests, this rheostat should be adjusted to give 2.4 volts at the terminals of the battery cable, outside the chassis.

TROUBLE CHART AND CONTINUITY TESTS:

Before making continuity tests with an "open test" meter, be sure that the battery cable is completely disconnected from the batteries, and remove all tubes from the chassis.

If no voltage is obtained in sockets in the same circuit when making the set analyzer tests, check the battery cable for open circuits by testing between the following points:

Battery End of Cable	Contact No. In Chassis
Red Wire	6
Black, Red Tracer	5
Maroon Wire	7
Black, Yellow Tracer	9
Yellow Wire	3
Black and Green	4
Black, Green Tracer	8

Electrical Tests

Trouble Indicated by Set Analyzer	Make Tests From	To	Correct Reading	Probable Cause of Trouble if Incorrect Reading is Obtained
No. "A" Volts at any socket	22	6	Full Scale (Switch on)	Open Battery Switch
	51	52	Zero (Switch Off)	Shorted Battery Switch
No. "A" Volts at R.F. Sockets	9	10	Full Scale	Open Wiring
	9	14	Full Scale	Open Wiring
	9	18	Full Scale	Open Wiring
	3	11	Full Scale	Open Wiring
	3	15	Full Scale	Open Wiring
	3	19	Full Scale	Open Wiring

No. "A" Volts at Detector Socket	9	22	Full Scale	Open Wiring
	3	23	Full Scale	Open Wiring
No. "A" Volts at A.F. Sockets	9	34	Full Scale	Open Wiring
	9	26	Full Scale	Open Wiring
	9	30	Full Scale	Open Wiring
	3	35	Full Scale	Open Wiring
	3	27	Full Scale	Open Wiring
	3	31	Full Scale	Open Wiring
No. "B" Volts at R.F. Sockets	6	12	Full Scale	Open R.F. Choke or Wiring
	6	16	Full Scale	Open R.F. Choke or Wiring
	6	20	Full Scale	Open R.F. Choke or Wiring
No. "B" Volts at Detector Socket	6	25	Slight Deflection	Open Detector Plate Choke; R-4 Resistor or Wiring
No. "B" Volts at	5	29	¾ Scale	Open or shorted Primary of Input Transformer or Wiring
R.F. Sockets	6	33	¾ Scale	Open or shorted Audio Filter Choke, Pri. of Output Transformer, or Wiring
	6	37	¾ Scale	
No. "C" Volts at R.F. or Detector Sockets	2	44	Zero to Full Scale	(Rotate Volume Control Knob) Open Volume Control
	2	60	Full Scale	Open Sec. No. 1 R.F. Coil
	2	61	Full Scale	Open Sec. No. 2 R.F. Coil
	2	62	Full Scale	Open Sec. No. 3 R.F. Coil
	53	63	Full Scale	Open Sec. No. 4 R.F. Coil
	8	9	Slight Deflection	Open R-3, R-5 Resistor, Volume Control, or Wiring
	4	53	1/3 Scale	Open R6 Resistor
No. "C" Volts at A.F. Sockets	4	28	Slight Deflectiton	Open R-1 Resistor or Wiring
	8	32	½ Scale	Open Sec. Input Trans. or Wiring
	8	36	½ Scale	Open Sec. Input Trans. or Wiring
No. Screen Grid	7	13	Full Scale	Open Wiring
Volts	7	17	Full Scale	Open Wiring
	7	21	Full Scale	Open Wiring
	7	24	Slight Deflection	Open R-2 Resistor or Wiring
Troubles Not Indicated by Set Analyzer	36	42	Zero to Full Scale	(Rotate Tone Control Knob) Open Tone Control
	1	2 (L. D. Switch on "Distance")	Full Scale	Open Primary No. 1 R.F. Coil
Testing Fixed Condensers	2	10	Hand Should Jump and Return to Zero	Open or shorted .25 Mfd. Condenser
	7	9	Hand Should Jump and Return to Zero	Open or shorted .1 Mfd. Condenser
	25	28	Hand Should Jump and Return to Zero	Open or shorted .01 Mfd. Detector Plate Condenser
	22	25	Hand Should Jump and Return to Zero	Open or shorted .1 Mfd. Detector By-Pass Condenser
	12	61	Zero	Coupling Condenser Shorted to Sec. of R.F. Coil
	16	62	Zero	Coupling Condenser Shorted to Sec. of R.F. Coil
	20	63	Zero	Coupling Condenser Shorted to Sec. of R.F. Coil
	22	25	Hand Should Jump and Return to Zero	Shorted .0001 or .0005 Mfd. Detector plate filter condensers
	42	43	Slight Jump and Return to Zero	(Disconnect lead from 42) Shorted Tone Control Condenser
	6	30	Hand Should Jump and Return to Zero	Open or shorted 1 Mfd. Condenser
	2	53	Hand Should Jump and Return to Zero	Open or Shorted .01 Mfd. Det. by Pass Condenser

NOTE: Remove tubes when making Cont. Tests.

DELCO APPLIANCE CORP.

DELCO 110V., A.C. RB-1 & RC-1

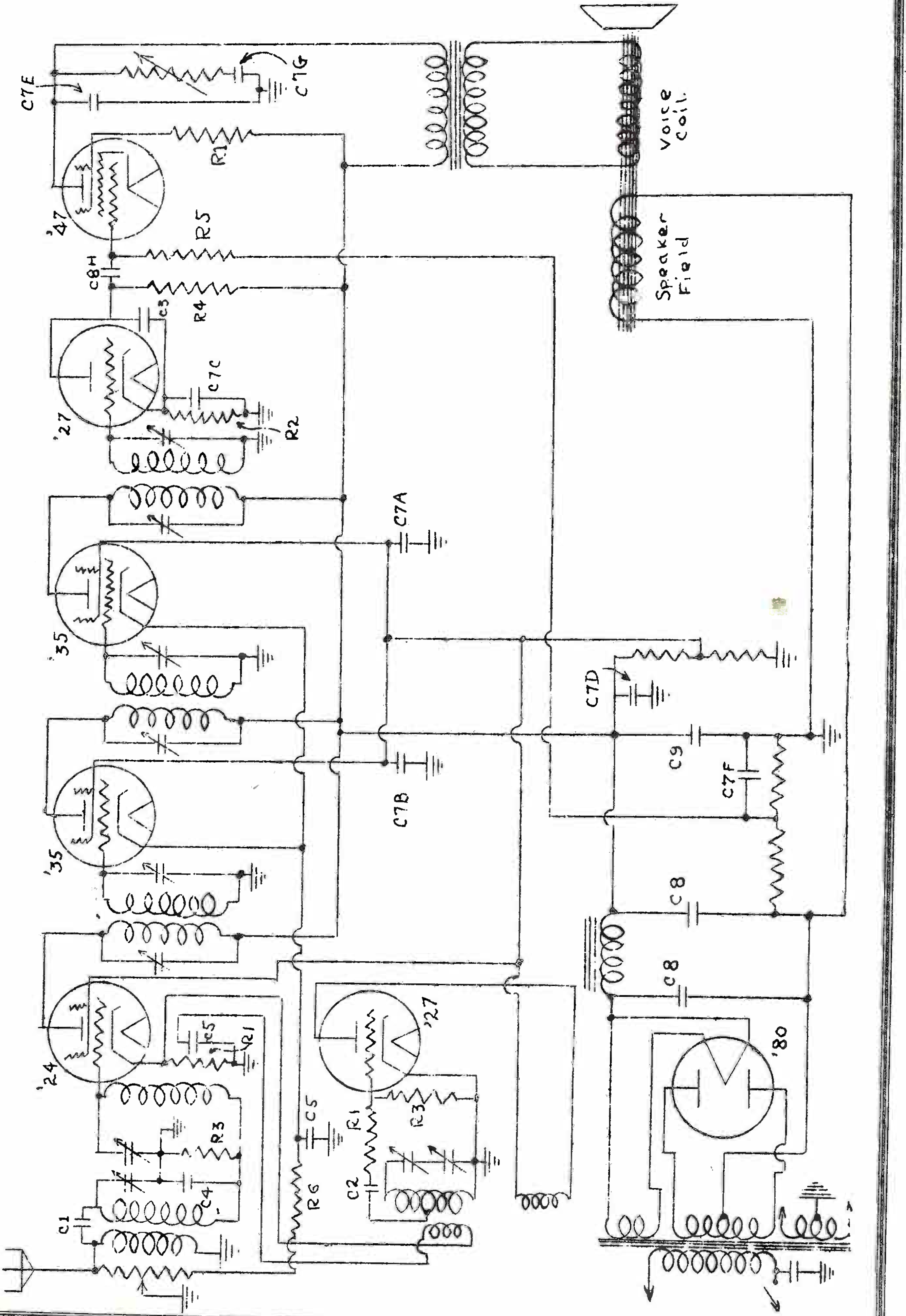

DELCO APPLIANCE CORP.

(7-Tube Superheterodyne Receivers)

(110 Volt AC)

RB-1 and RC-1

TUBE EQUIPMENT:

The tubes used in this receiver are:

Quantity	Type	Function
2	D-235	I.F. Amplifiers
1	D-224	1st Detector
2	D-227	2nd Detector, Oscillator
1	D-247	Power Amplifier
1	D-280	Full Wave Rectifier

INSTALLATION OF TUBES AND EXPLANATION OF CIRCUIT:

The complete circuit of this model consists of the following: a pre-selector composed of two tuned circuits; a local oscillator circuit using one type 227 tube; a first detector circuit using one type 224 tube where the oscillator and incoming signals are combined; two stages of intermediate frequency amplification consisting of six resonant circuits tuned to 175 K.C. using two type 235 tubes ;a second detector stage using a type 227 tube; and one stage of audio frequency amplification using a type 247 tube. A type 280 full wave rectifying tube is used, which makes a total of seven tubes. The receiver contains eight resonant circuits to obtain selectivity.

ANTENNA AND GROUND CONNECTIONS:

A good ground connection is necessary for the best operation. Use an approved ground clamp to make a connection to a cold water pipe or drive a six foot ground rod into the ground where the earth will be moist the entire year.

An outdoor Antenna of from 100 to 150 feet (including lead-in) will usually give the best results. (See antenna section of Manual.)

ELECTRICAL CONNECTIONS:

The attachment cord may be plugged into any convenient A.C. outlet of the proper voltage and frequency, after the tubes are installed and the antenna and ground connections are made.

The electrolytic condensers which are used in this chassis may be damaged if the receiver is used for any length of time on a line voltage in excess of 120 volts.

Before the receiver is permanently installed, the line voltage should be accurately measured. If the reading is over 120 volts, or if you have reason to believe that the line voltage will exceed 120 volts at any time while the receiver will be in use, a line voltage regulator should be installed.

REPLACING DIAL LIGHT BULB:

The dial light bulb is a Mazda No. 41, rated at 2½ volts. It can be replaced without removing the chassis from the cabinet by lifting the entire socket and bracket assembly straight up and back. The end of the mounting bracket is bent in the form of a clip which clips over the top of the front frame of the tuning condenser.

TRIMMER CONDENSER ADJUSTMENT:

To adjust the trimmers, use a test oscillator, or tune in a station broadcasting with a frequency of approximately 1400 kilocycles. Adjust the volume by means of the volume control until the station can be clearly, but faintly heard.

Starting at the front, adjust each trimmer in order by turning the screws either to the right or left and leave them in the position in which the loudest signal is received or in which the out-put is greatest.

DESCRIPTION:

The complete circuit of this model consists of the following: a pre-selector of two tuned circuits; a local oscillator circuit using one type 227 tube; a first detector circuit using one type 224 tube where the oscillator and incoming signals are combined; two stages of intermediate frequency amplification consisting of six resonant circuits tuned to 175 K.C. using two type 235 tubes; a second detector stage using a type 227 tube; and one stage of audio frequency amplification using a type 247 tube. A type 280 full wave rectifying tube is used, tains eight resonant circuits to obtain selectivity. which makes a total of seven tubes. The receiver con-

An output transformer mounted on the speaker frame, is used to match the impedance of the speaker voice coil with the impedance of the power tube. The field current for the speaker is supplied from the set and the field coil also functions as a filter reactor.

The tone control consists of a variable resistance and a fixed condenser connected in series between the plate of the type 247 (pentode) tube and the frame of the chassis.

Volume is controlled by means of a potentiometer which is connected in series with the cathodes of the two I.F. Amplifier tubes and also in parallel with the primary of the antenna coil.

TABLE OF RESISTORS AND CONDENSERS:

RESISTORS

No.	Body	End	Spot	Resistance	Watts
R1	Yellow	Green	Red	4,500	½
R2	Red	Green	Orange	25,000	½
R3	Yellow	Black	Orange	40,000	½
R4	Brown	Black	Yellow	100,000	½
R5	Green	Black	Yellow	500,000	½
R6	In Metal Cover			400	

CONDENSERS

No.	Capacity		No.	Capacity	Lead Color
C1	.00001	Mfd.	C7A	.25	Green
C2	.0005	Mfd.	C7B	.25	Green
C3	.002	Mfd.	C7C	.1	Brown
C4	.01	Mfd.	C7D	.25	Terminal
C5	.1-.1	Mfd.	C7E	.006	Red
C6	.1	Mfd.	C7F	.25	Green
			C7G	.03	Blue
			C7H	.03	White-White

C8 4-4 Mfd. (Electrolytic)
C9 8 Mfd. (Electrolytic)

Condensers 67A to C7H, inclusive, are included in the By-Pass Condenser Pack.

ELECTRICAL TESTS

TESTING WITH A SET ANALYZER:

The following chart gives the approximate readings that should be obtained with any of the more reliable makes of radio set analyzers.

NOTE: **Do not** attempt to take readings on the type 247 (pentode) tube unless your set analyzer is equipped to test sets using this type of tube. Readings at the 247 socket will be misleading, if the set analyzer is not adapted to test pentode tubes.

Type of Tube	Position of Tube	Fil. Volts	Plate Volts	Control Grid Volts	Screen Grid Volts	Cathods Volts	Pentode Screen Volts	Normal Plate MA
224	1st Det.	2.1	225	2.0	85	7	..	1
235	1st I.F.	2.1	225	3.3	79	5	..	14
235	2nd I.F.	2.1	225	3.3	75	5	..	13
227	Oscillator	2.15	75	0	..	0	..	5
227	2nd Det.	2.15	125	15.0	..	15	..	1
247	A.F.	2.15	210	1.0	..	..	200	3.5
280	Rect.	4.5	300	..	..	..	..	25-35

Line Volts 110. Volume Control on Full.

EMERSON RADIO & PHONOGRAPH CORP.

Voltage Readings:

Model J

NOTE: Voltages should be measured with volume control all the way "ON" using zero to 250 volt D. C. voltmeter with resistance of 1,000 ohms per volt.

The following are average voltages taken on 118 volts 60 cycle A. C. line. A slight variation is allowable for variation in meters and line voltage.

	Plate	Screen	Cathode
Pentode tube —ground to	240	245	None
235 R. F. tube —ground to	245	75	2.5
224 1st. Detector tube —ground to (center tube)	245	75	7
224 2nd. Detector tube — ground to	75	75	7

The grid of the Pentode is biased through such high resistance that only an indication of negative bias can be read with an ordinary high resistance meter.

Model "KS"

Ground to	Plate	Screen	Cathode
'35 R. F. Tube	250	75	3
'27 Oscillator Tube	75	—	12
'24 1st. Detector Tube	250	75	9
'35 I. F. Tube	250	75	3
'24 Automatic Volume Control Tube	—	—	9
'24 2nd. Detector Tube	85	75	7
'47 Audio Amplifier Tube	230	250	—

Model T

	Plate	Screen	Cathode
Detector tube —ground to	80 V	80 V	7 V
1st R. F. tube —ground to	240 V	80 V	2.0 V
Pentode tube —ground to	235 V	240 V	None

The grid of the Pentode is biased through such high resistance that only an indication of negative bias can be read with an ordinary high resistance meter.

Model T-S

	Plate	Screen	Cathode
Detector tube —ground to	80 V	80 V	7 V
1st R. F. tube —ground to	240 V	80 V	2.0 V
Pentode tube —ground to	235 V	240 V	None

The grid of the Pentode is biased through such high resistance that only an indication of negative bias can be read with an ordinary high resistance meter.

MODEL J

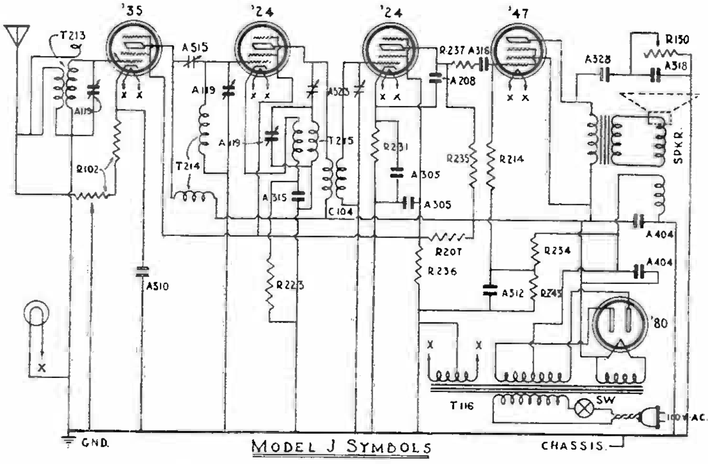

MODEL J SYMBOLS

A119	3-GANG COND	A318	.005 MF	R130	TONE CONTROL.	R236	60M OHM.
A208	.00015 MF.	A328	.06 MF.	R207	60M.OHM 1-WATT	R237	100 M. OHM.
A305	1 MF	A404	4 MF	R214	750M OHM.	R243	1 MEGOHM
A310	.01 MF	A515	ADJ. COND	R223	5M OHM.	T213	ANT. COIL
A312	.03MF	A523	I.F. TUNING UNIT	R231	50M.OHM.	T214	R.F. COIL.
A315	.001 MF	C104	I.F. COIL	R234	6 MEGOHM.	T215	OSC. COIL.
A316	.003MF	R102	VOL CONTROL	R235	500 M.OHM.	T116	PWR TRANS

MODEL K-S

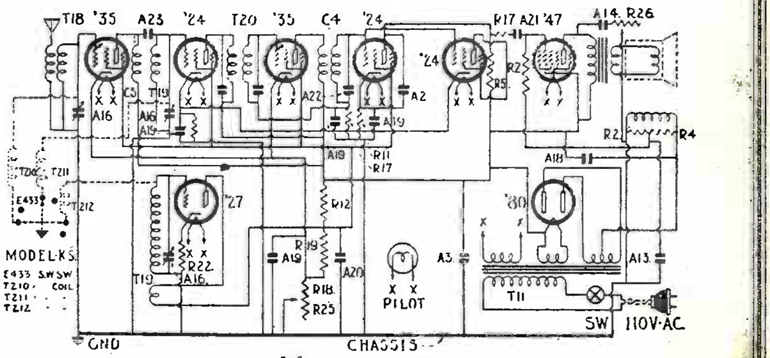

MODEL "K" KEY TO SYMBOLS

A2 · .0001 MF	A20 · 4 MF	R4 · 6MEGOHM	R 22 · 1250 OHM
A3 · 8MF	A21 · .003 MF	R5 · 500 M OHM.	R 25 · 8 M OHM.
A13 · .02 MF	A22 · 40-80 MMF	R 11 · 50M OHM	R 26 · 10M.OHM.
A14 · .05MF	A23 · .00005 MF	R 12 · 12M OHM	T 11 · POWER TRANSF'R
A16 · 3 GANG SUPER COND.	C4 · TWIN CHOKE	R 17 · 100M OHM	T 18 · ANTENNA COIL
A18 · 6MF	C5 · R F CHOKE	R 18 · 1500HM.	T19 · TRANSLATORCOIL
A19 · 3-.1MF 1-.2MF	R2 · 1 MEGOHM	R 19 · 10M OHM	T20 · I.F. TRANSFORMER.

Model "T"

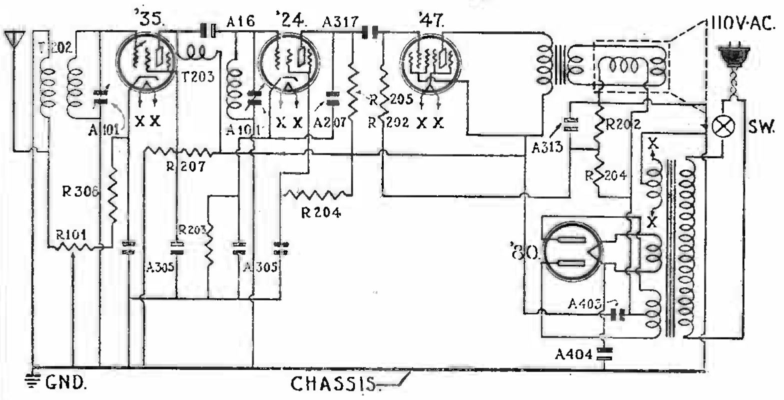

Model "T-S"

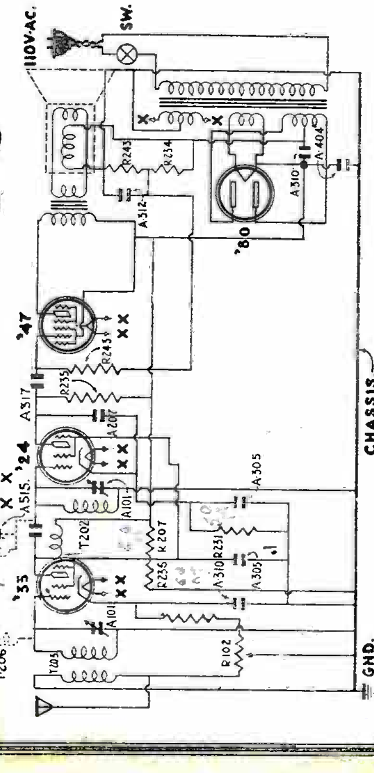

MODEL ·T· SYMBOLS.

A101. 2·GANG VAR. COND.	R243. 1 MEGOHM.
A207. .0001 MF.	R231. 50 M.OHM.
A310. .01 MF.	R234. 6MEGOHM.
A404. 4MF.	R235. .5MEGOHM.
A312. .03 MF.	R236. 60 M.OHM.
A317. .006 MF.	R207. 60 M.OHM.
A305. .1MF.	T202. RF COIL.
R102. 8020 OHM.	T203. ANTENNA COIL.

MODEL·TS.

A515. ADJ. COND.
E434. SHORT WAVE SWITCH.
T206. S.W. ANT. COIL.
T207. S.W. RF. COIL.

FREED-EISEMANN RADIO CORP.

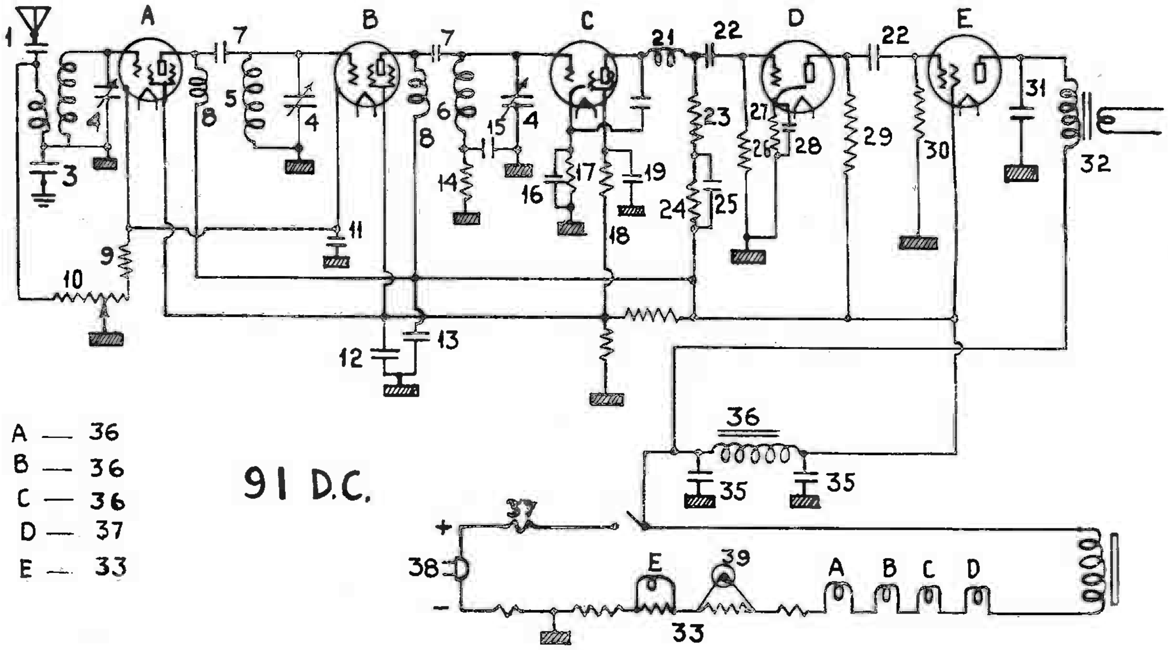

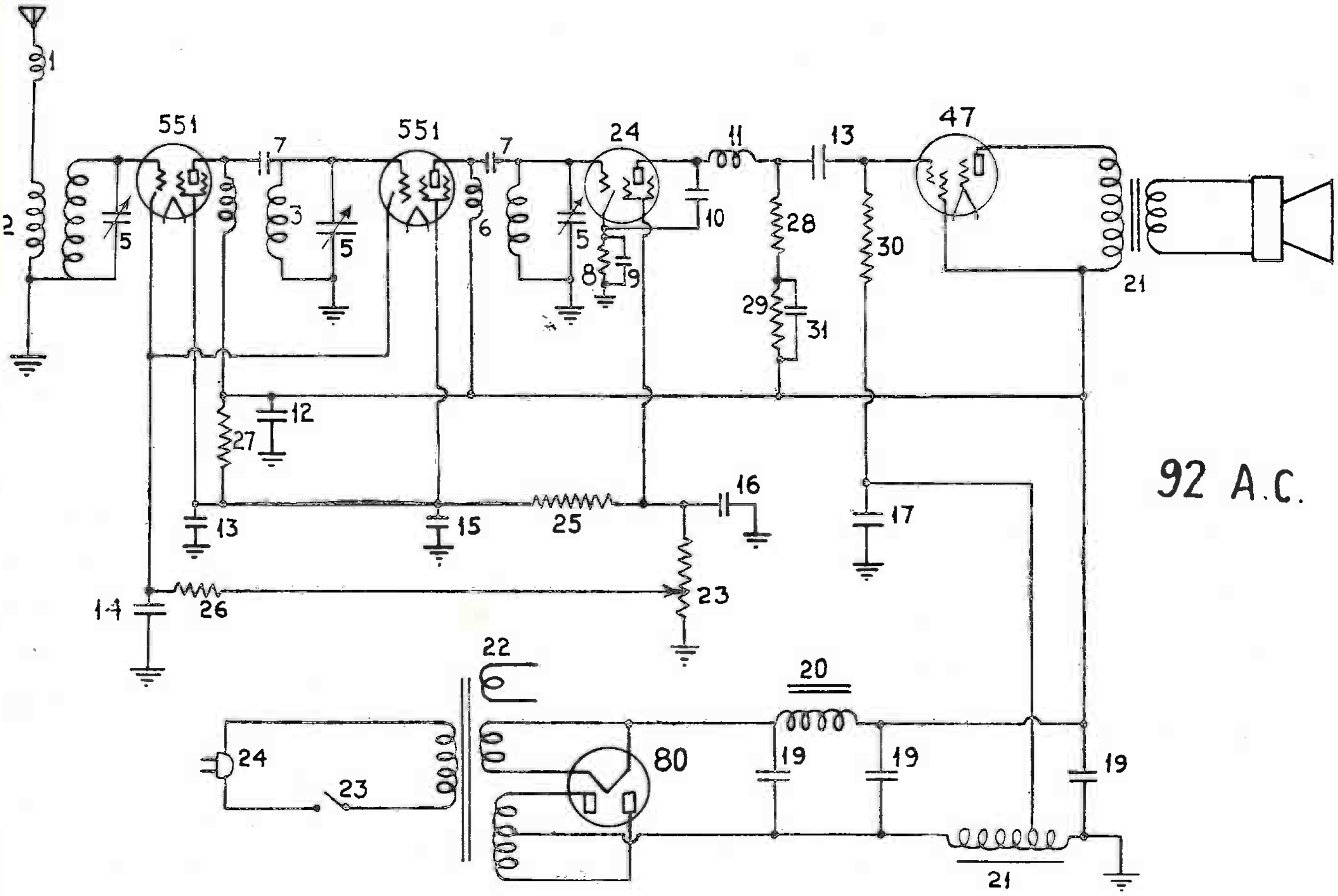

FREED-EISEMANN RADIO CORP.

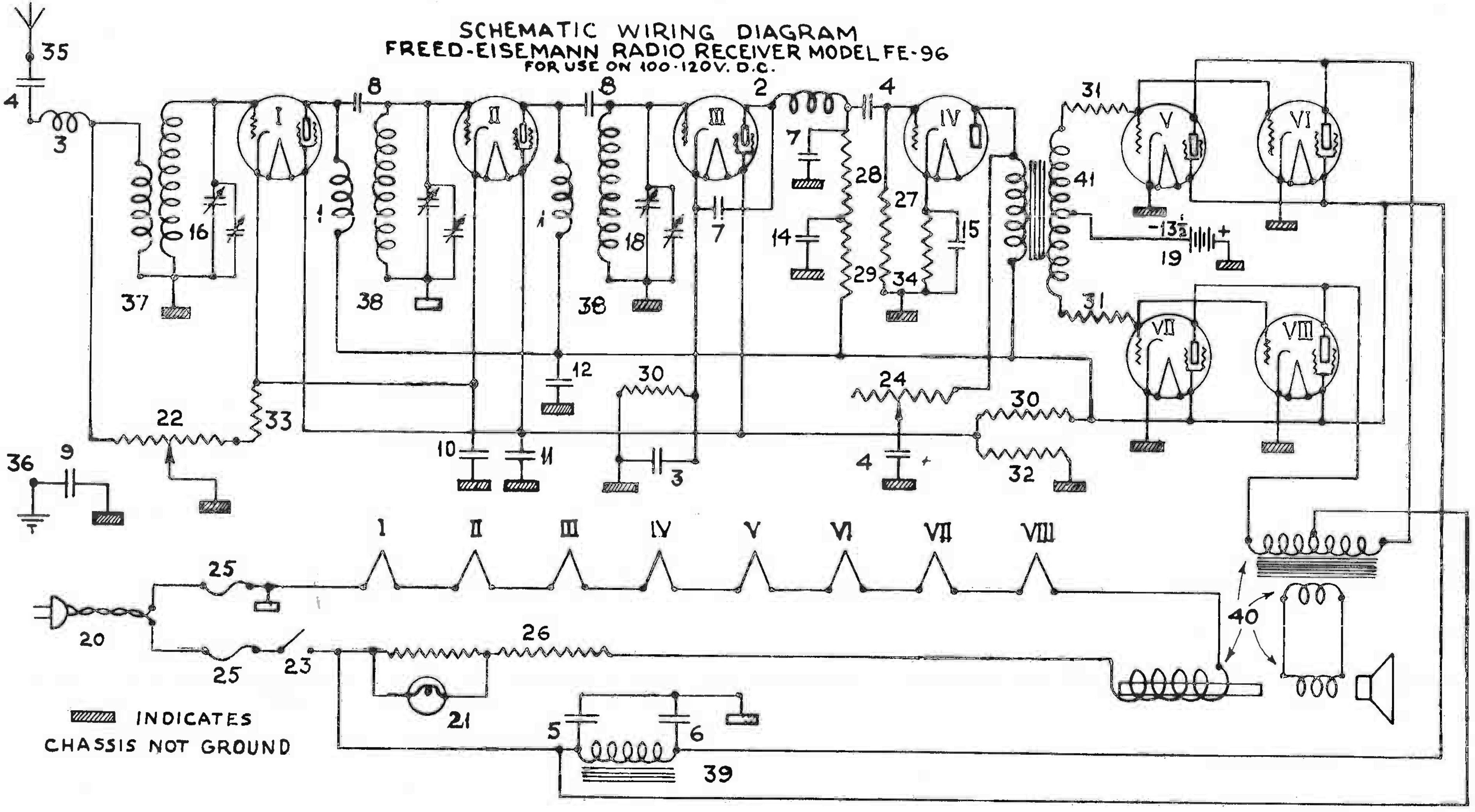

SCHEMATIC WIRING DIAGRAM
FREED-EISEMANN RADIO RECEIVER MODEL FE-96
FOR USE ON 100-120V. D.C.

▨ INDICATES
CHASSIS NOT GROUND

ITEM	PART NO.	ITEM	PART NO.	ITEM	PART NO.	ITEM	PART NO	ITEM	PART NO.	ITEM	TYPE NO
1	23.4	10	24.18	19	26.2	28	30.4	37	35.10	I	'36
2	23.9	11		20	26.7	29	30.5	38	35.11	II	
3	23.12	12		21	26.14	30	30.6	39	36.5	III	
4	24.3	13		22	26.15	31	30.17	40	36.2	IV	'37
5	24.7	14		23		32	30.16	41	36.6	V	'38
6		15		24	26.16	33	30.12			VI	
7	24.10	16	25.1	25	26.19	34	30.18			VII	
8	24.11	17		26	30.1	35	35.8			VIII	
9	24.15	18		27	30.3	36					

FREED-EISEMANN RADIO CORP.

SCHEMATIC WIRING DIAGRAM
FREED-EISEMANN RADIO RECEIVER
MODEL FE98

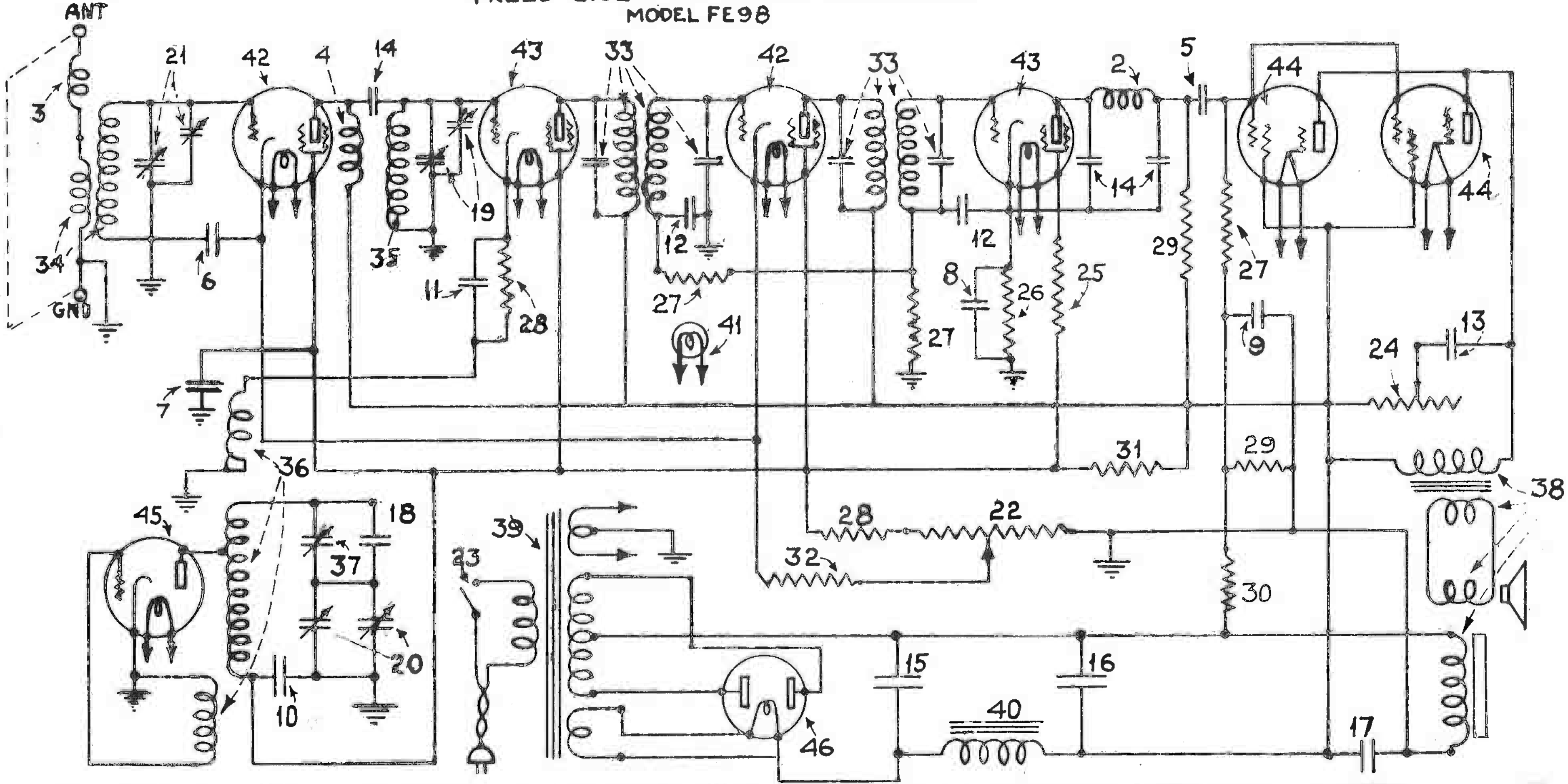

ITEM	PART NO.	ITEM	PART NO.	ITEM	PART NO.	ITEM	PART NO.	ITEM	PART NO.
1	35.8	11	24.15	19	25.1	29	30.20	39	36.9
2	23.9	12	24.21	20		30	30.21	40	36.16
3	23.12	13	24.29	21		31	30.22	41	26.27
4	23.4	14	24.10	22	26.26	32	30.23	42	'51 TUBE
5	24.3	15	24.30	23		33	35.15	43	'24 TUBE
6	24.26	16	24.23	24	26.30	34	35.16	44	'47 TUBE
7		17	24.19	25	30.3	35	35.17	45	'27 TUBE
8		18	24.20	26	30.6	36	35.18	46	'80 TUBE
9				27	30.10	37	35.19		
10				28	30.19	38	36.1		

JESSE FRENCH & SONS PIANO CO.

Model 5-093

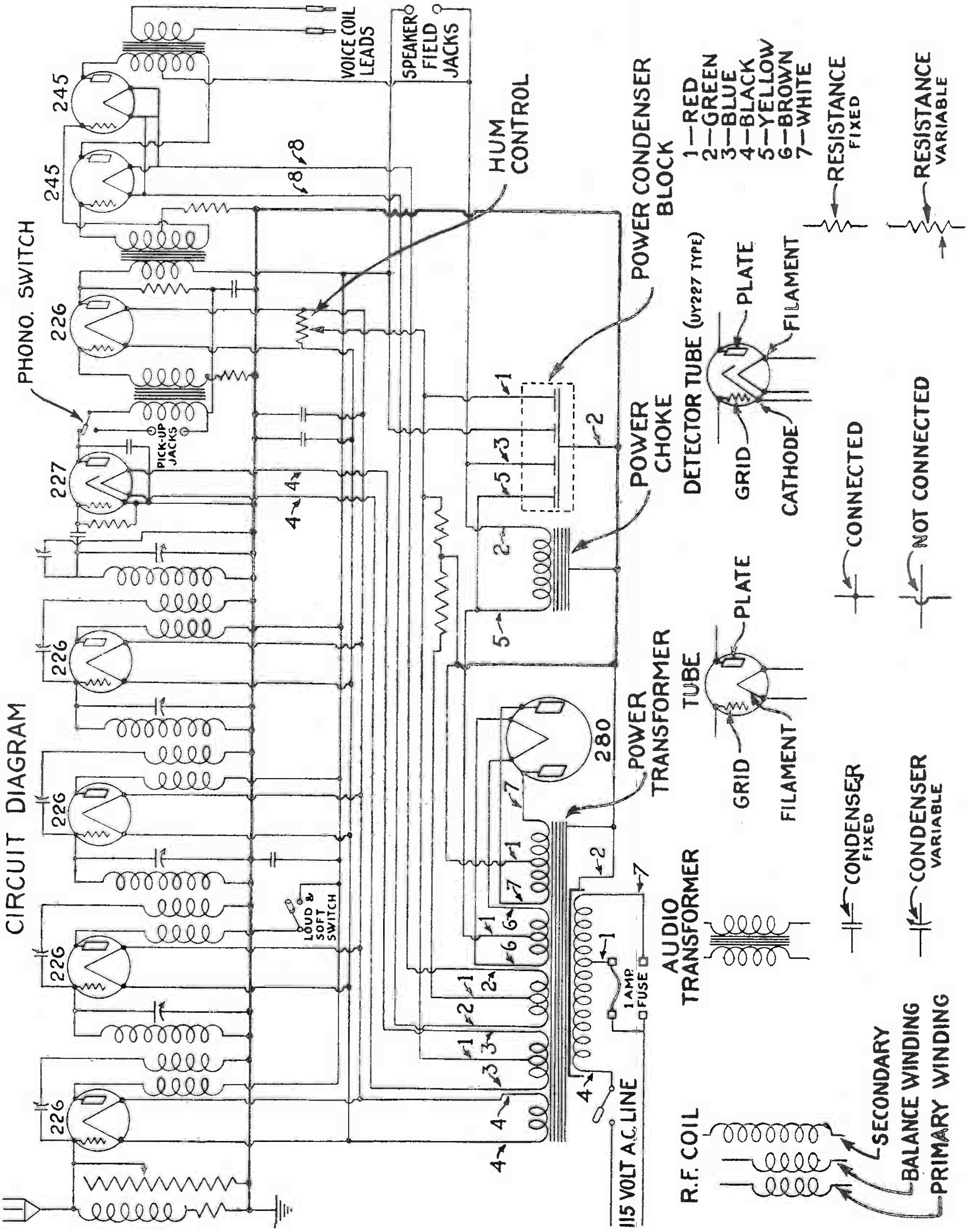

Figure 1

JESSE FRENCH & SONS PIANO CO.

MODEL 5–093 8-TUBE RADIO CHASSIS

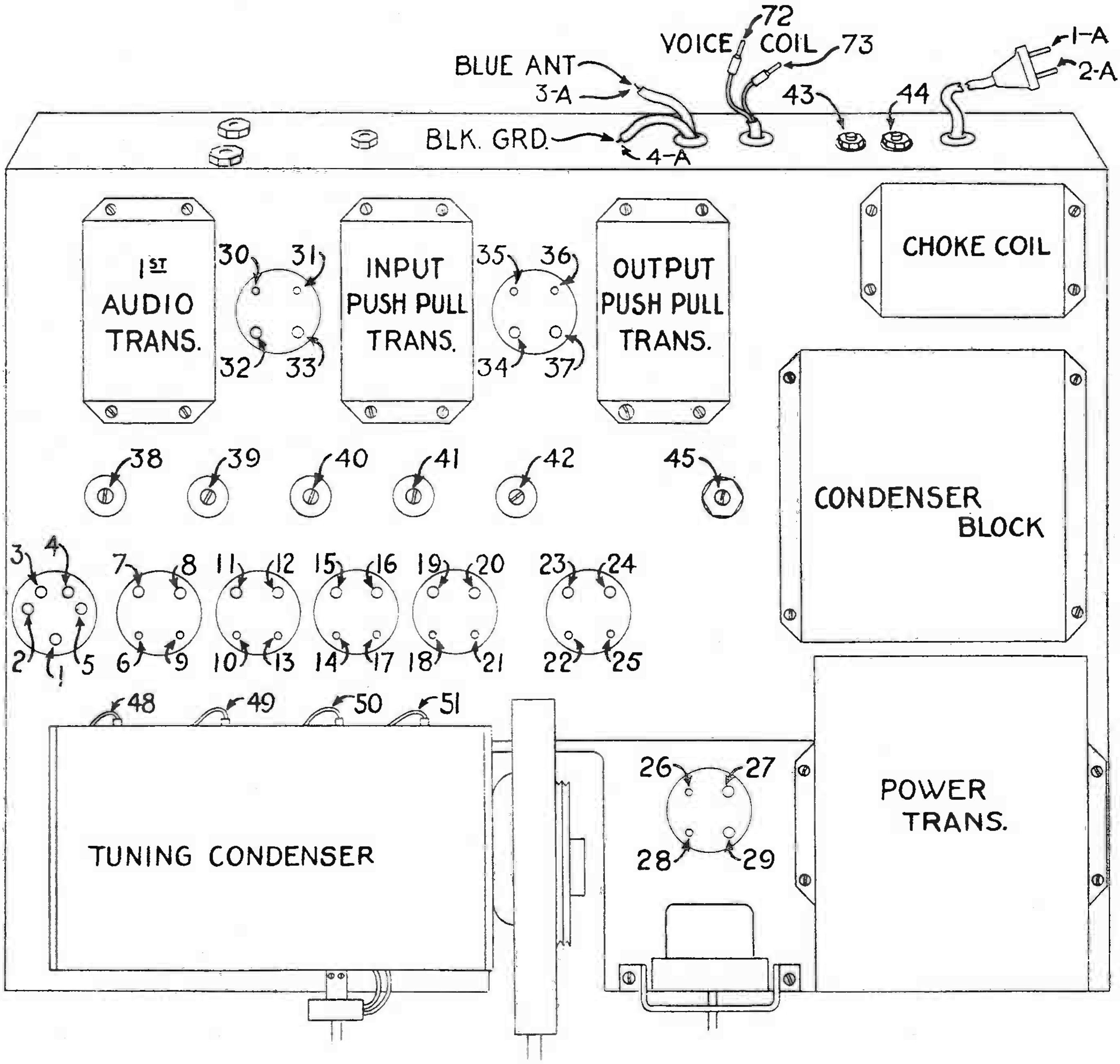

Figure 3

Tube No. in Order (1)	Type of Tube (2)	Position of Tube 1st R.F. Det., Etc. (3)	READINGS, PLUG IN SOCKET OF SET									
			TUBE OUT		TUBE IN TESTER							
			A Volts (4)	B Volts (5)	A Volts (6)	B Volts (7)	C Volts (Control (8) Grid)	Cathode -Heater (9) Volts	Normal Plate (10) M.A.	Plate M.A. Grid (11) Test	Plate Change (12) M.A.	Screen Grid (13) Volts
1	UY-227	Det.	2.6	112	2.3	30	0	10	2			
2	UX-226	1st RF	1.5	140	1.4	132	10		5	9	4	
3	UX-226	2nd RF	1.5	140	1.4	132	10		5	9	4	
4	UX-226	3rd RF	1.5	140	1.4	132	10		5	9	4	
5	UX-226	4th RF	1.5	140	1.4	132	10		5	9	4	
6	UX-226	1st AF	1.5	127	1.4	117	6.5		3.5	6.5	3	
7	UX-245	Push-Pull	2.6	260	2.4	245	11.5		25	29.5	4.5	
8	UX-245	Push-Pull	2.6	260	2.4	245	11.5		25	29.5	4.5	
9												
10												

Line Voltage, 120. Set on 120 Volt Tap. Volume Control Position—Any Position.

Note.—"C" Bias Voltage Reading on Audio tubes is low, due to the current draw of the set tester and high resistance in the set.

JESSE FRENCH & SONS PIANO CO.

TESTS TO BE MADE WITH SET IN CABINET

(Refer to Illustration, Fig. No. 3)

Turn set on and remove *one tube at a time*, namely the tube in the socket on which the tests are to be made.

Type of Meter to Use	Positive Lead to Contact Number	Negative Lead to Contact Number	Proper Reading in Volts	Probable Trouble if Improper Reading is Obtained
A. C.	No. 3	No. 4	2.5	Open 227 Filament wiring, short circuit or defective Power Transformer.
D. C.	No. 2	No. 3	120	Open primary in 1st Audio Transformer or phono-radio switch open.
A. C.	No. 7	No. 8	1.4	Open 226 Filament Winding or Defective Wiring.
D. C.	No. 6	No. 7	145	Open primary in 4th R. F. Coil.
D. C.	No. 8	No. 9	42	C-Bias Resistor defective.
A. C.	No. 11	No. 12	1.4	Open 226 Filament Winding or Defective Wiring.
D. C.	No. 10	No. 11	145	Open primary in No. 3 R. F. Coil.
D. C.	No. 12	No. 13	42	C-Bias Resistor defective.
A. C.	No. 15	No. 16	1.4	Open 226 Filament Winding or Defective Wiring.
D. C.	No. 14	No. 15	145	Open primary in No. 2 R. F. Coil.
D. C.	No. 16	No. 17	42	C-Bias Resistor defective.
A. C.	No. 19	No. 20	1.4	Open 226 Filament Winding or Defective Wiring.
D. C.	No. 18	No. 19	145	Open primary in No. 1 R. F. Coil.
D. C.	No. 20	No. 21	42	C-Bias Resistor defective.
A. C.	No. 23	No. 24	2.5	Open 245 Winding or Defective Wiring.
D. C.	No. 22	No. 23	270	Open primary in output Push-Pull Transformer.
D. C.	No. 24	No. 25	30	Open secondary in output Push-Pull Trans. or open Resistor.
A. C.	No. 34	No. 37	2.5	Open 245 Winding or Defective Wiring.
D. C.	No. 36	No. 37	270	Open primary in output Push-Pull Transformer.
D. C.	No. 34	No. 35	30	Open secondary in output Push-Pull Trans. or open Resistor.
A. C.	No. 32	No. 33	1.4	Open 226 Filament Winding or Defective Wiring.
D. C.	No. 31	No. 33	130	Open primary in in-put Push-Pull Transformer.
D. C.	No. 32	No. 30	35	Open C-Bias Resistor on 1st Audio Transformer.
A. C.	No. 27	No. 29	5.5	Open 280 Filament Winding.
D. C.	No. 44	No. 43	150	Open Power Choke or Defective Condenser Block.

WITH POWER SWITCH IN OFF POSITION

Open Test

Open Test	Frame	Negative Lead to Contact Number	Proper Reading in Volts	Probable Trouble if Improper Reading is Obtained
Open Test	Frame	No. 39	½ Scale	Open Balance Winding in No. 4 R. F. Coil.
Open Test	Frame	No. 40	½ Scale	Open Balance Winding in No. 3 R. F. Coil.
Open Test	Frame	No. 41	½ Scale	Open Balance Winding in No. 2 R. F. Coil.
Open Test	Frame	No. 42	½ Scale	Open Balance Winding in No. 1 R. F. Coil.
Open Test	Frame	No. 48	Full Scale	Open Secondary on No. 4 R. F. Coil.
Open Test	Frame	No. 49	Full Scale	Open Secondary on No. 3 R. F. Coil.
Open Test	Frame	No. 50	Full Scale	Open Secondary on No. 2 R. F. Coil.
Open Test	Frame	No. 51	Full Scale	Open Secondary on No. 1 R. F. Coil.
Open Test	1-A	2-A	Full Scale	Open Primary Power Transformer (Switch must be on)
Open Test	3-A	4-A	Full Scale	Open Antenna Choke (Reading should vary when volume control is adjusted).
Open Test	72	73	Full Scale	Open Voice Coil Winding in Output Transformer.

JESSE FRENCH & SONS PIANO CO.

MODEL 5-093

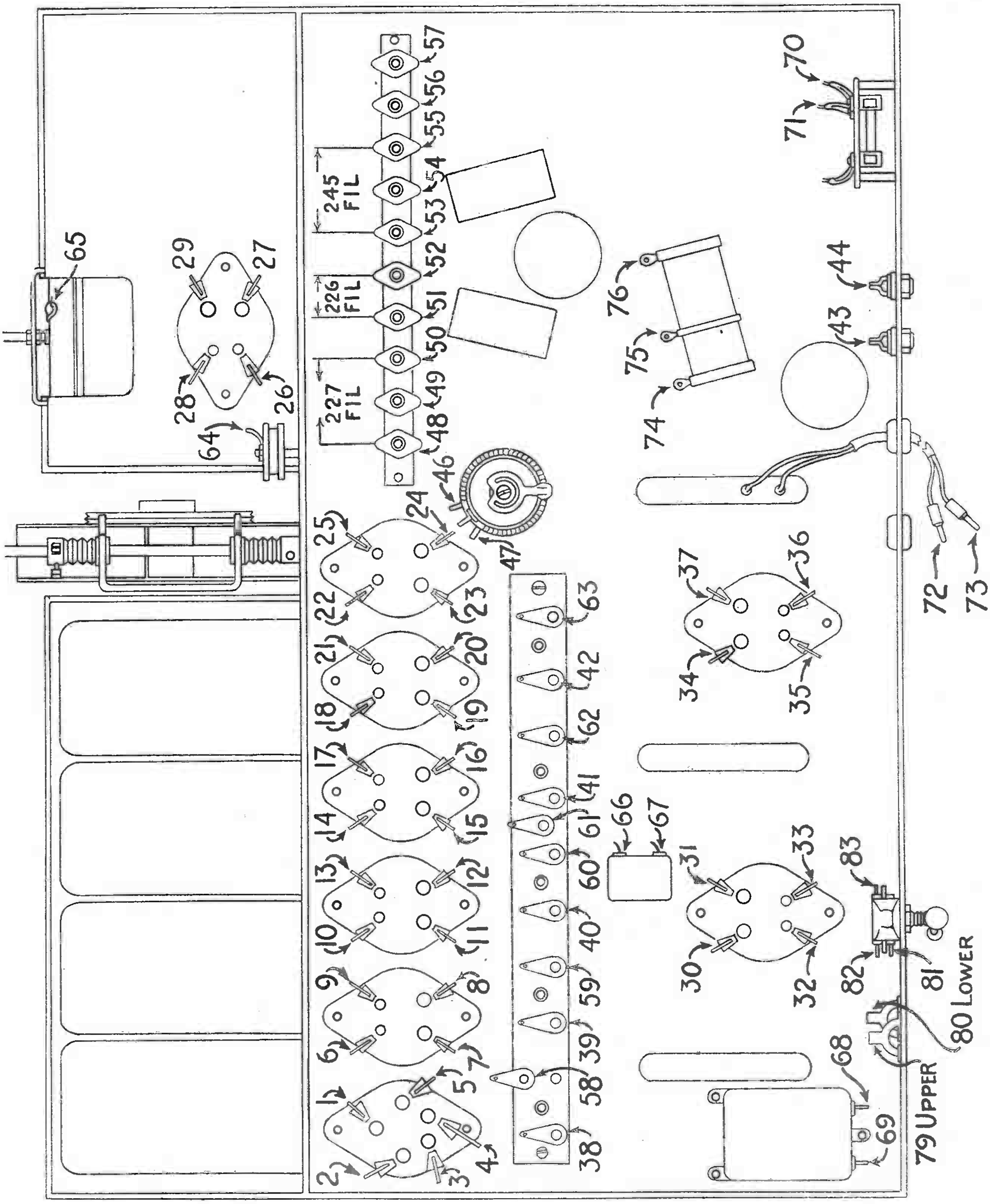

Figure 4

JESSE FRENCH & SONS PIANO CO.

MODEL 5-093

TESTS TO BE MADE WITH CHASSIS REMOVED FROM CABINET

Using Open Test Meter

(Refer to Illustration, Fig. No. 4)

Test from Contact No.	To Contact No.	Proper Reading	Probable Trouble if Improper Reading is Obtained
Frame	No. 63	Full Scale	Antenna Choke open (Volume control off).
Frame	No. 42	½ Scale	Balance Winding open in No. 1 R. F. Coil.
Frame	No. 41	½ Scale	Balance Winding open in No. 2 R. F. Coil.
Frame	No. 40	½ Scale	Balance Winding open in No. 3 R. F. Coil.
Frame	No. 39	½ Scale	Balance Winding open in No. 4 R. F. Coil.
No. 43	No. 18	½ Scale	Tests Primary 1st R. F. Coil.
No. 43	No. 14	½ Scale	Tests Primary 2nd R. F. Coil.
No. 43	No. 10	½ Scale	Tests Primary 3rd R. F. Coil.
No. 43	No. 6	½ Scale	Tests Primary 4th R. F. Coil.
Frame	No. 17	Full Scale	Tests Secondary 1st R. F. Coil.
Frame	No. 13	Full Scale	Tests Secondary 2nd R. F. Coil.
Frame	No. 9	Full Scale	Tests Secondary 3rd R. F. Coil.
Frame	No. 58	Full Scale	Tests Secondary 4th R. F. Coil.
No. 2	No. 80	¼ Scale	Tests Primary 1st Audio Transformer.
Frame	No. 32	Slight Deflection	Tests Secondary 1st Audio Transformer.
No. 43	No. 33	¼ Scale	Tests Primary Input Push-Pull Transformer.
No. 35	No. 25	Slight Deflection	Tests Secondary Input Push-Pull Transformer.
No. 44	No. 36	½ Scale	Tests Primary of Output Transformer.
No. 44	No. 22	½ Scale	Tests Primary of Output Transformer.
No. 72	No. 73	Full Scale	Tests Secondary of Output Transformer.
No. 44	No. 56	½ Scale	Tests Power Choke.
No. 57	No. 71	Full Scale	Tests Primary of Power Transformer.
No. 57	No. 70	Full Scale	Tests Tap on Primary of Power Transformer.
No. 28	No. 26	½ Scale	Tests Hi-Voltage Secondary of Power Transformer.
No. 27	No. 29	Full Scale	Tests 280 Filament Winding of Power Transformer.
No. 34	No. 37	Full Scale	Tests 245 Filament Winding of Power Transformer.
No. 19	No. 20	Full Scale	Tests 226 Filament Winding of Power Transformer.
No. 3	No. 4	Full Scale	Tests 227 Filament Winding of Power Transformer.
Frame	No. 43	Hand should jump and return to 0	Power Condenser Defective. (Reverse leads if hand does not jump.)
Frame	No. 44	Hand should jump and return to 0	Power Condenser Defective.
Frame	No. 49	Hand should jump and return to 0	Power Condenser Defective. (Lead from No. 74 to No. 49 must be removed.)
No. 69	No. 68	Hand should jump and return to 0	Audio By-Pass Condenser Defective.
No. 66	No. 67	Hand should jump and return to 0	Radio Frequency By-Pass Condenser Defective.
Frame	No. 56	Hand should jump and return to 0	Power Condenser Defective.

JESSE FRENCH & SONS PIANO CO.

THE U-1 SUPERHETERODYNE CIRCUIT

The U-1 Chassis uses seven tubes as follows: One 551 variable Mu tube for the first tuned R. F. stage, one 224 screen grid tube for first tuned detector, with a 227 oscillator tube signal beating into the first detector stage. One 551 Variable Mu tube for the intermediate R. F. stage and a 224 for power detector. This second detector or Power Detector is resistance coupled to the power tube which is a PZ Pentode type tube. One 280 tube is used as a rectifier.

This circuit is very sensitive and more care must be taken in tuning than in a regular tuned R. F. circuit.

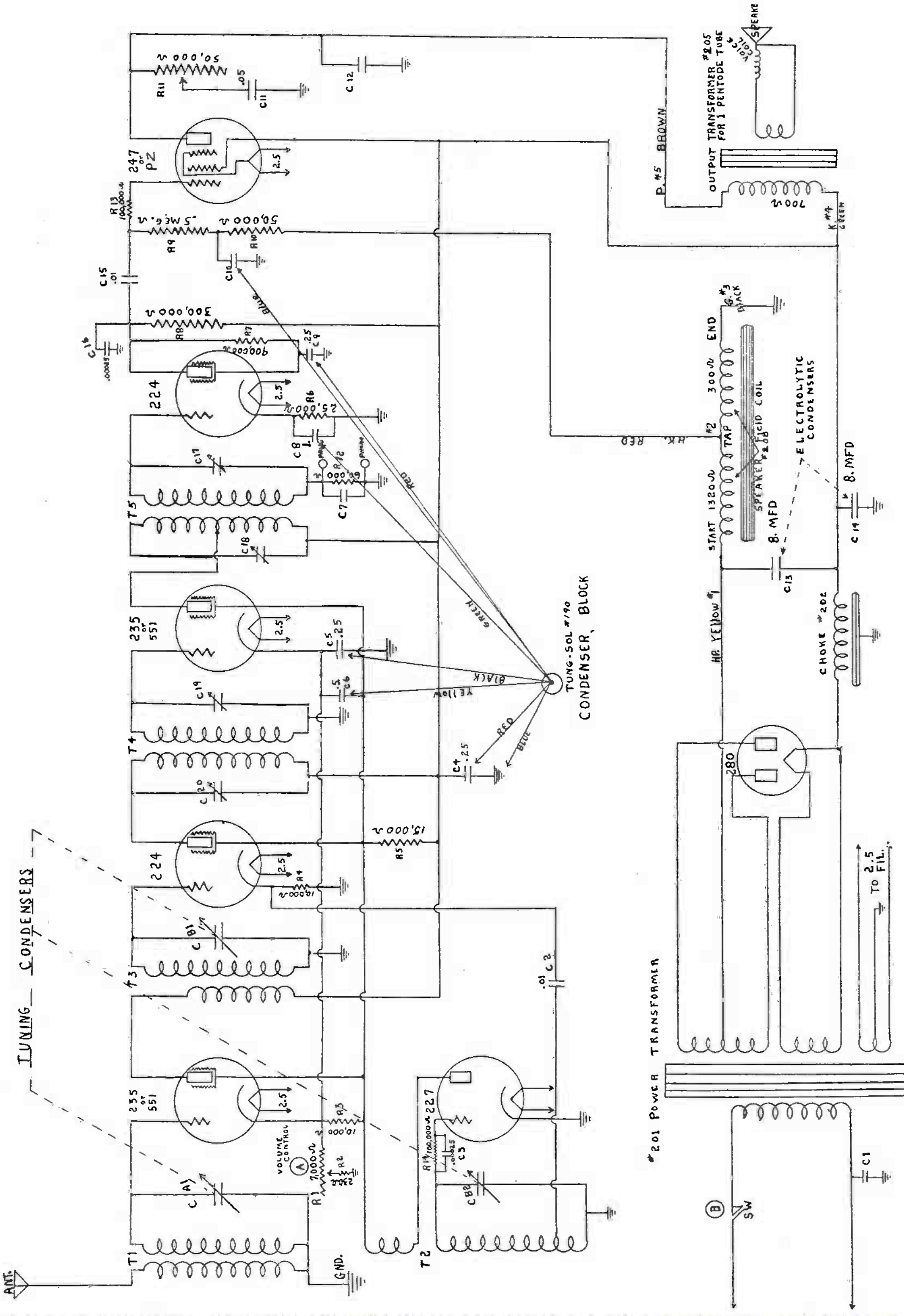

JESSE FRENCH U-1 SUPERHETERODYNE
SCHEMATIC WIRING DIAGRAM AND PARTS DESIGNATIONS

JESSE FRENCH & SONS PIANO CO.

SERVICE PROBLEMS

The service problems of a chassis usually point toward the voltage of a circuit. If you know the proper voltages at given points, you can usually trace down the location of the trouble.

With the aid of the schematic diagram and the following voltages, you may be able to correct your problems.

The following voltages are with the volume control set at minimum position.

No aerial or ground was used on the chassis when checking these voltages.

Line voltage was 110 volts A. C.

Tubes	227	551	224	551	224	PZ Pentode	280
Plate	95	246	246	246	98	226	278
Screen Grid	none	95	95	95	30	246	
Cathode	none	37	7.5	37	4.75	0	
Grid	—5.75	0	0	0	0	—1.5	

The following voltages are with the volume control set at maximum position.

Tubes	227	551	224	551	224	PZ Pentode	280
Plate	68	240	240	240	94	220	275
Screen Grid	0	68	68	68	28	240	
Cathode	0	3.5	5	3.5	4.5	0	
Grid	3.4	0	0	0	0	1.5	

The following are the given voltages at the speaker terminals: Brown lead 220 volts—Green lead 240 volts—Black lead 0—Red lead 14 volts—Yellow lead 83 volts.

NOTICE—It is very essential to have a ground on these receivers or a hum may result in the reproduction. Hum sometimes is caused by a Detector tube with a high hum level. This does not mean the tube is really defective. By reversing the two 224 type tubes in their sockets, you may cure the trouble.

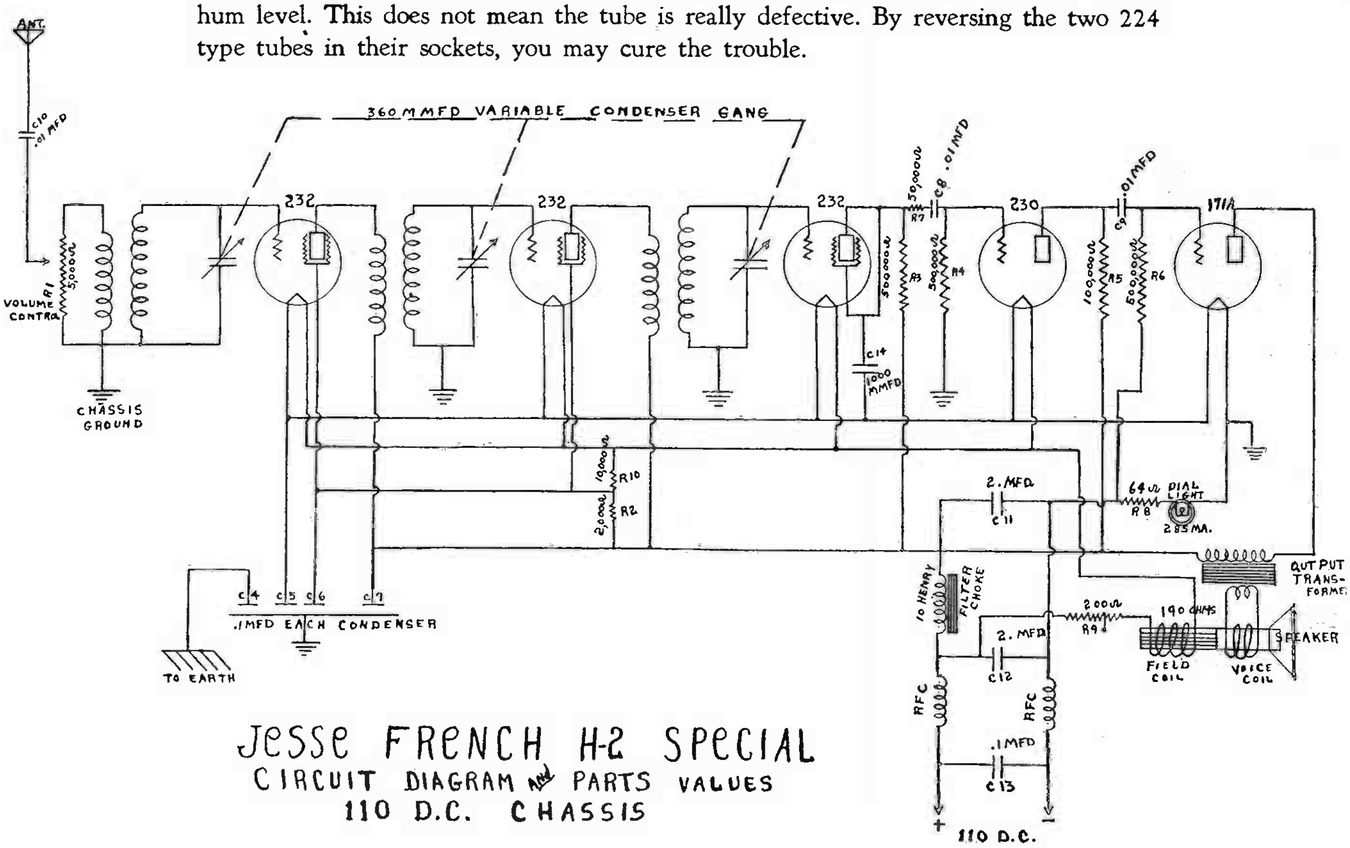

Jesse French H-2 Special
Circuit Diagram and Parts Values
110 D.C. Chassis

GALVIN MFG. CORP.

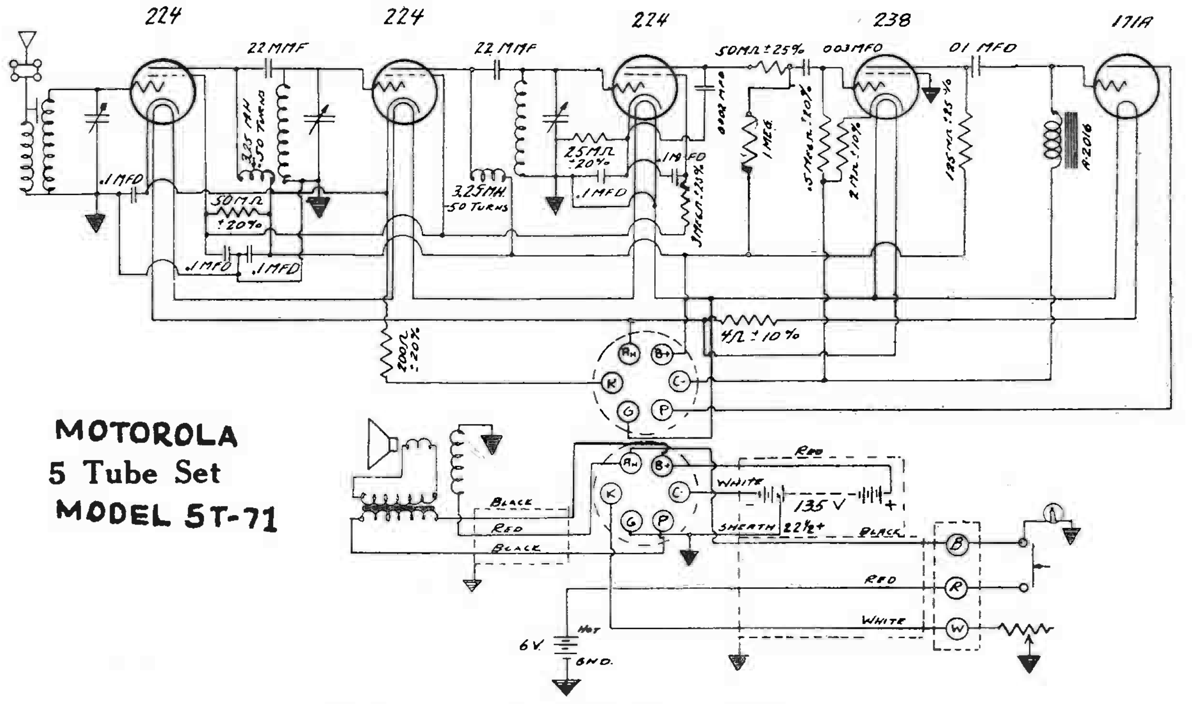

MOTOROLA
5 Tube Set
MODEL 5T-71

Schematic Wiring Diagram

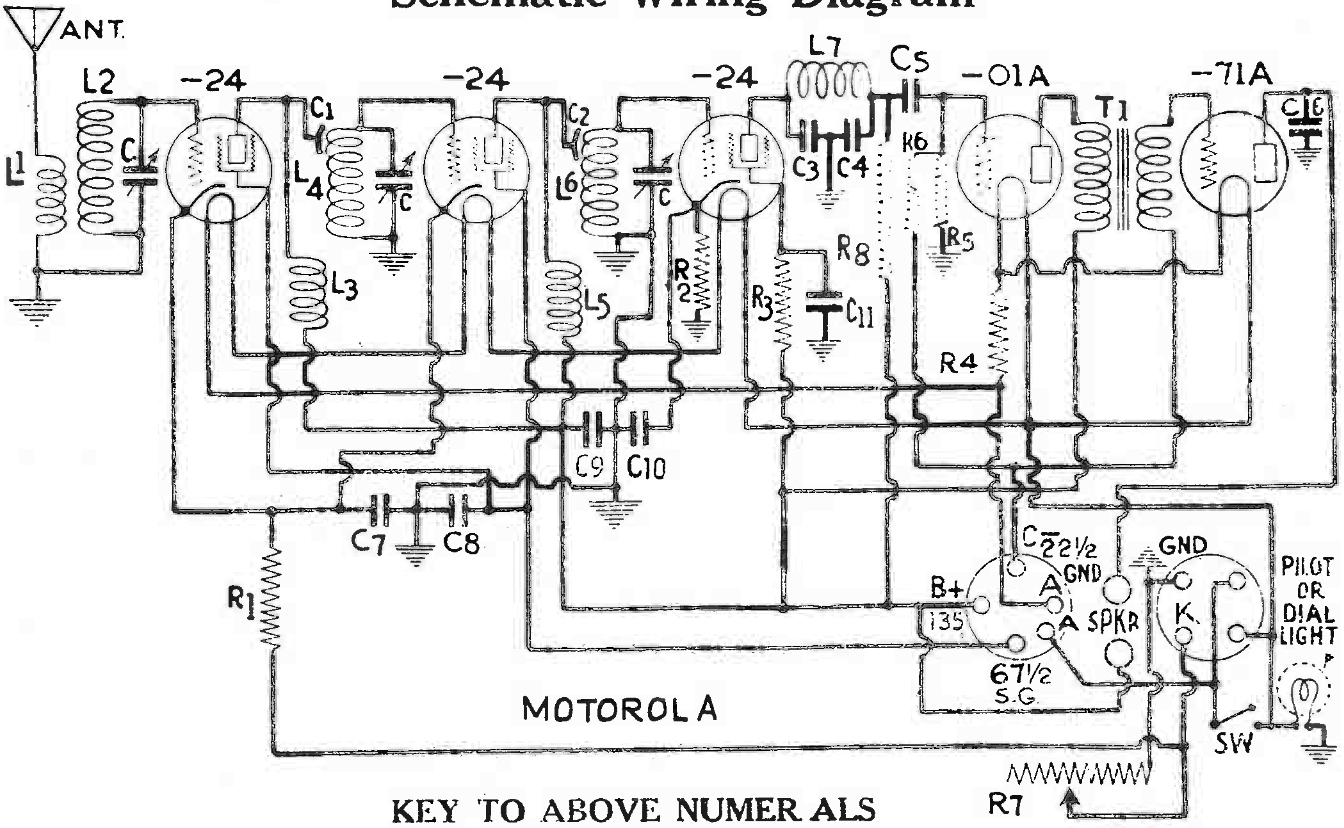

KEY TO ABOVE NUMERALS

L1—Antenna primary
L2, L4, L6—R. F. secondarys
L3, L5—R. F. plate chokes
L7—Detector plate choke
C, C1, C2—Main tuning condensers
C1, C2—R. F. coupling condenser. Cap. 9.6 micro-microfarads
C3, C4—0001 mfd. condensers
C5, C6, C11—.003 mfd. condensers
C7, C8, C9, C10—.25 mfd. by pass condensers
R1—200 Ω (Gray) resistor
R2—25,000 Ω (Black) resistor
R3, R6—3 meg (Blue or Pink) resistor
R4—2 Ω wire wound resistor
R5, R8—1 meg (Lavender) resistor
R7—300,000 Ω Volume control

GALVIN MFG. CORP.

NOTICE

DO NOT REMOVE CHASSIS UNTIL RADIO IS TURNED OFF.

DO NOT REMOVE "BR" TUBE UNLESS RADIO IS TURNED OFF.

THE "A" SUPPLY OF THIS RADIO IS POLORIZED THEREFORE, FASTEN THE RED WIRE TO THE POSITIVE TERMINAL, AND THE WHITE WIRE TO THE NEGATIVE TERMINAL.

CHECK THE POLARITY OF THE STORAGE BATTERY OF THE CAR BY MEANS OF A VOLTMETER.

DO NOT OPERATE THE RADIO WITH "A" LEADS REVERSED AS THE ELKONODE WILL DAMAGE BEYOND REPAIR.

REVERSED POLARITY OF THE "A" LEADS WILL INDICATE ITSELF BY:—

1. LOW "B" VOLTAGE
2. SPASMADIC HUM OF THE ELKONODE.
3. ERRATIC FLASHING OF THE "BR" TUBE

MOTOROLA

MODEL-61

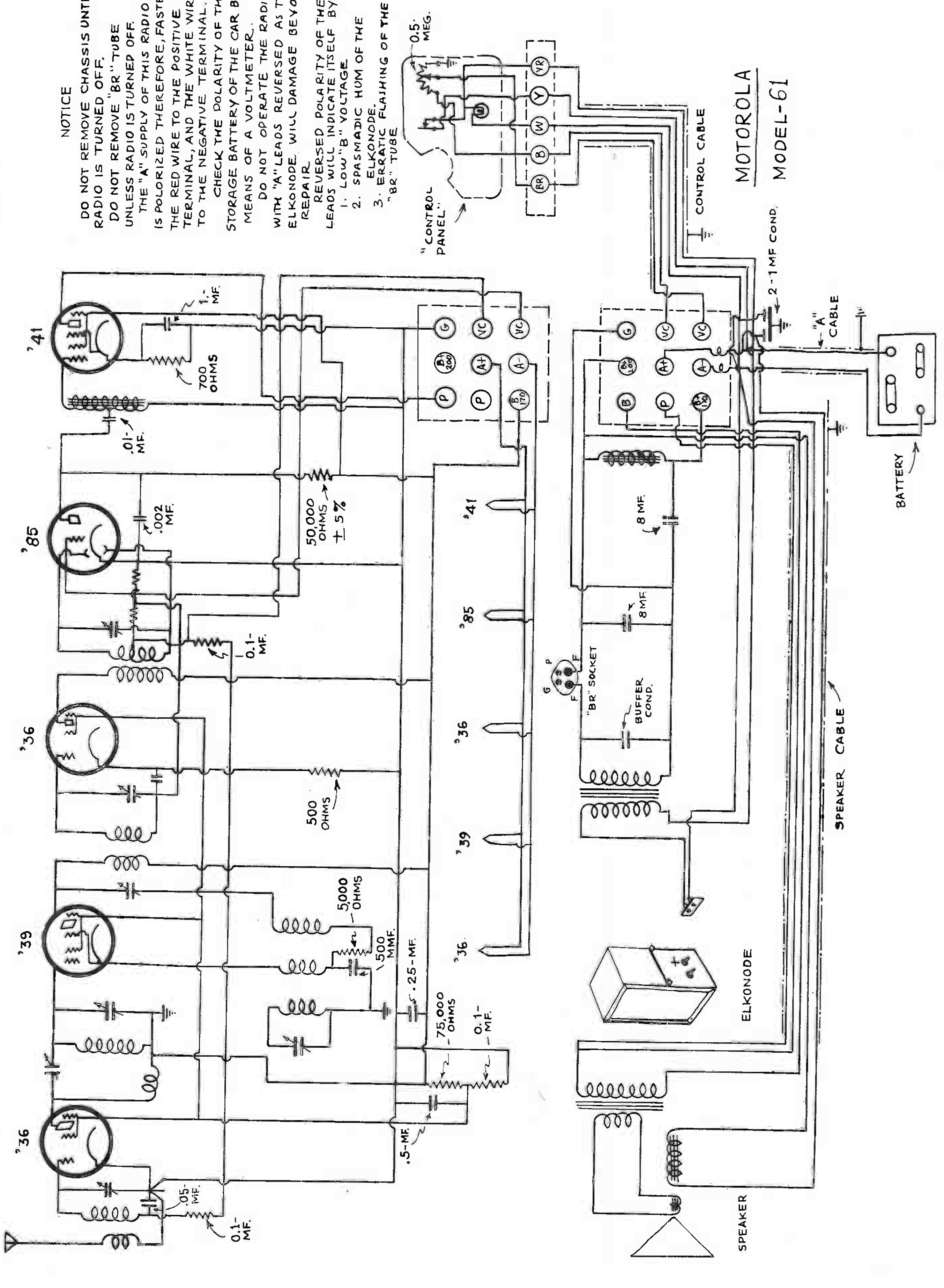

GALVIN MFG. CORP.

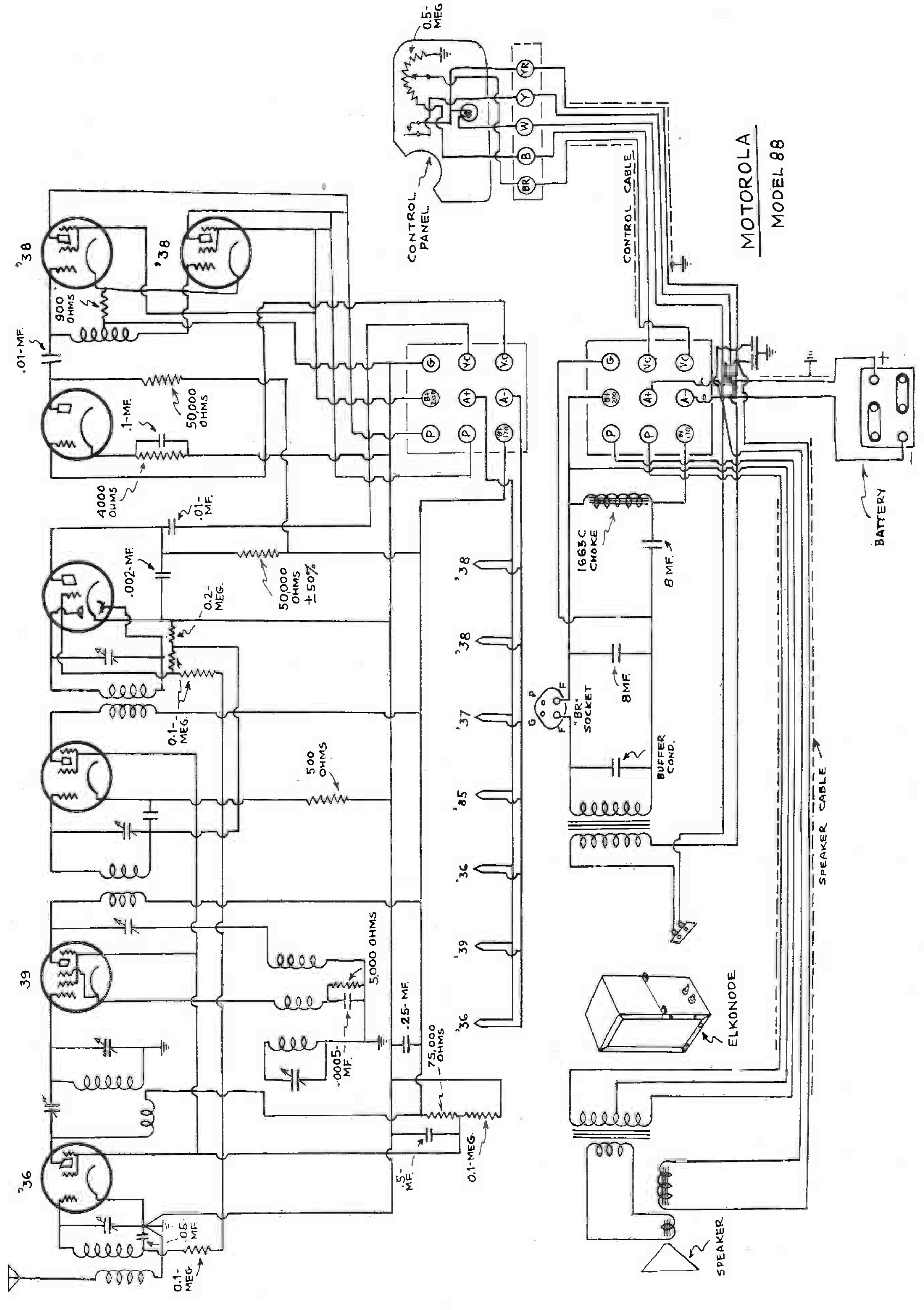

GALVIN MFG. CORP.

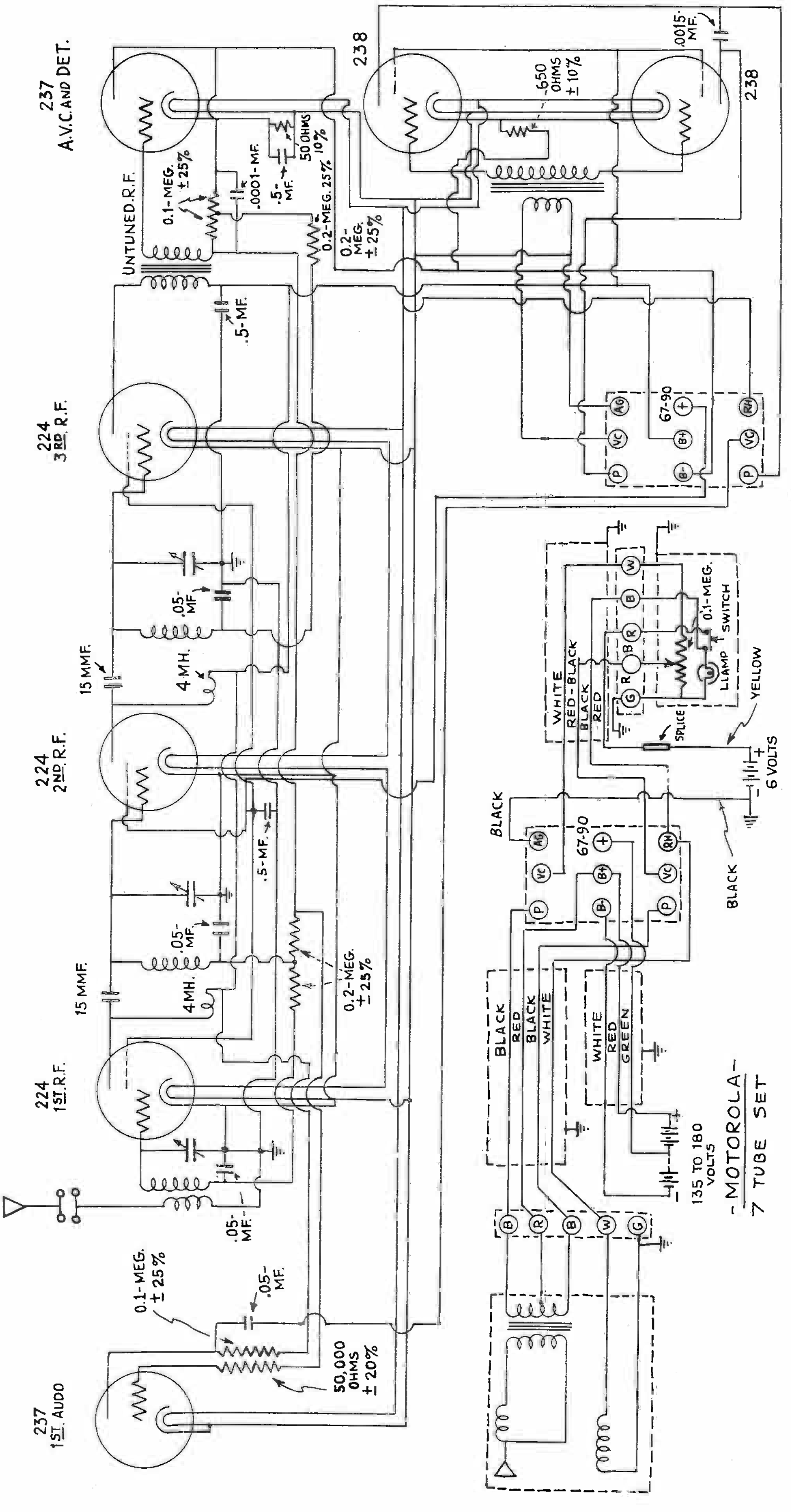

GALVIN MFG. CORP.

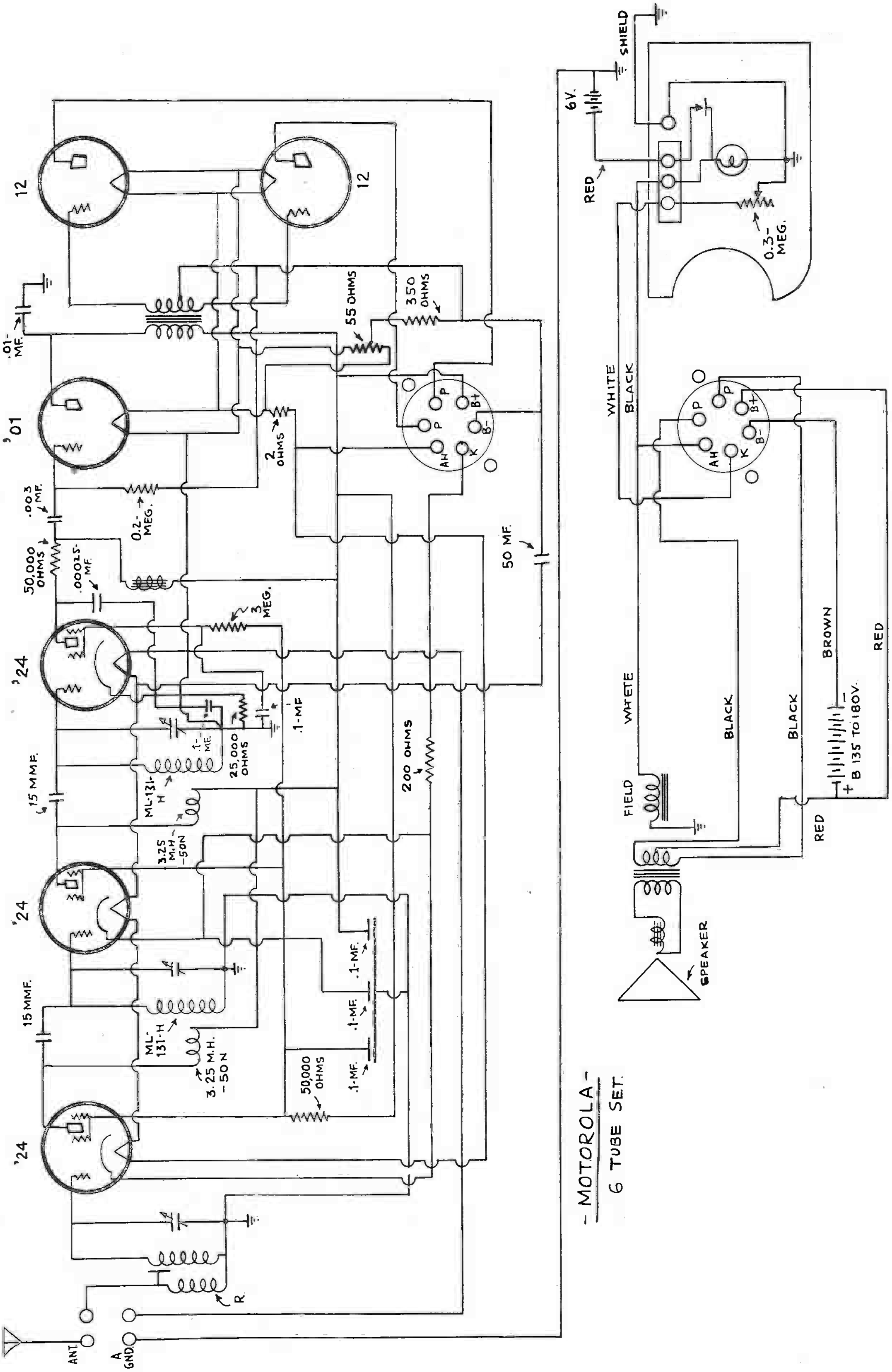

- MOTOROLA -
6 TUBE SET.

GALVIN MFG. CORP.

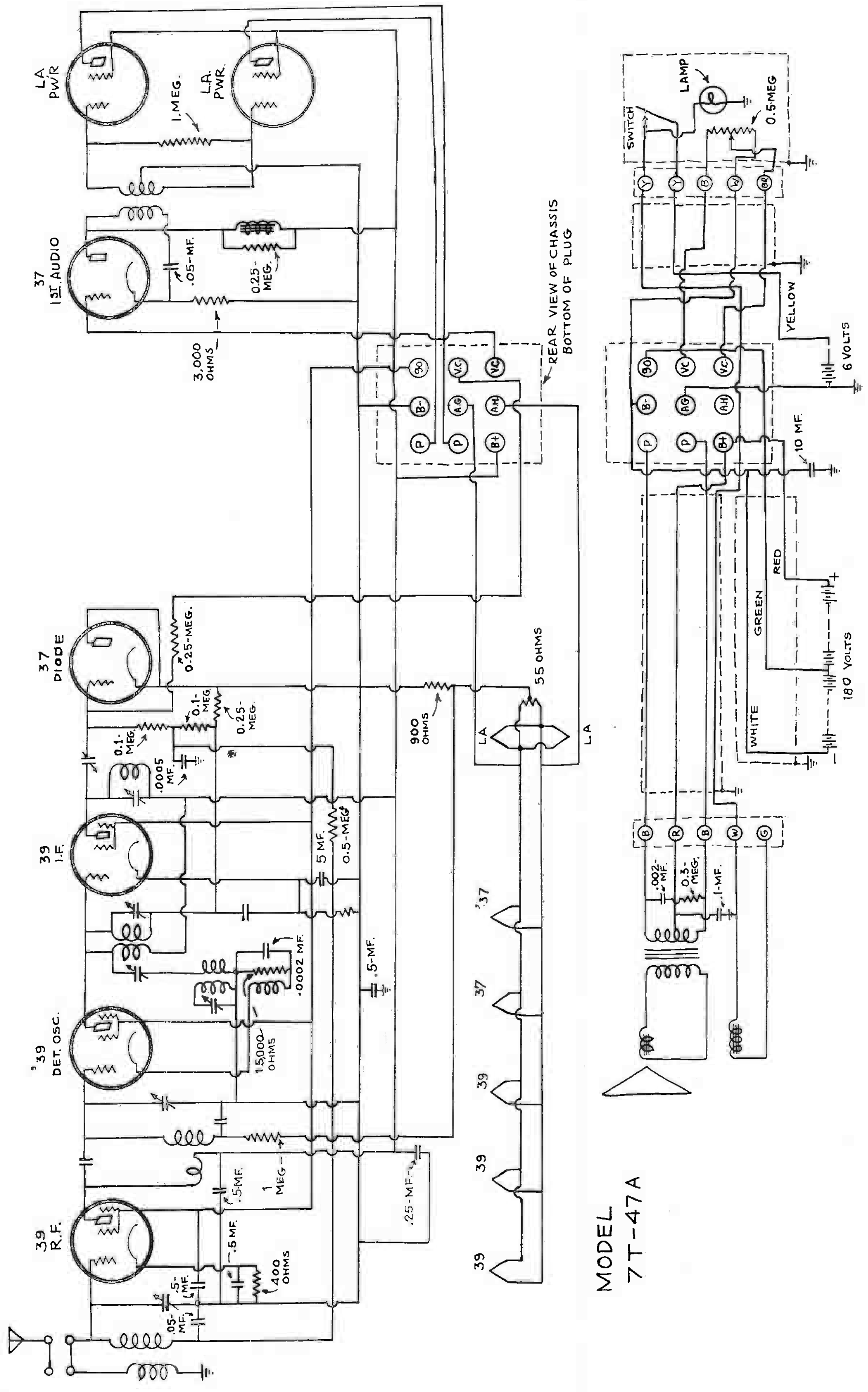

MODEL
7T-47A

GENERAL MOTORS RADIO CORP.

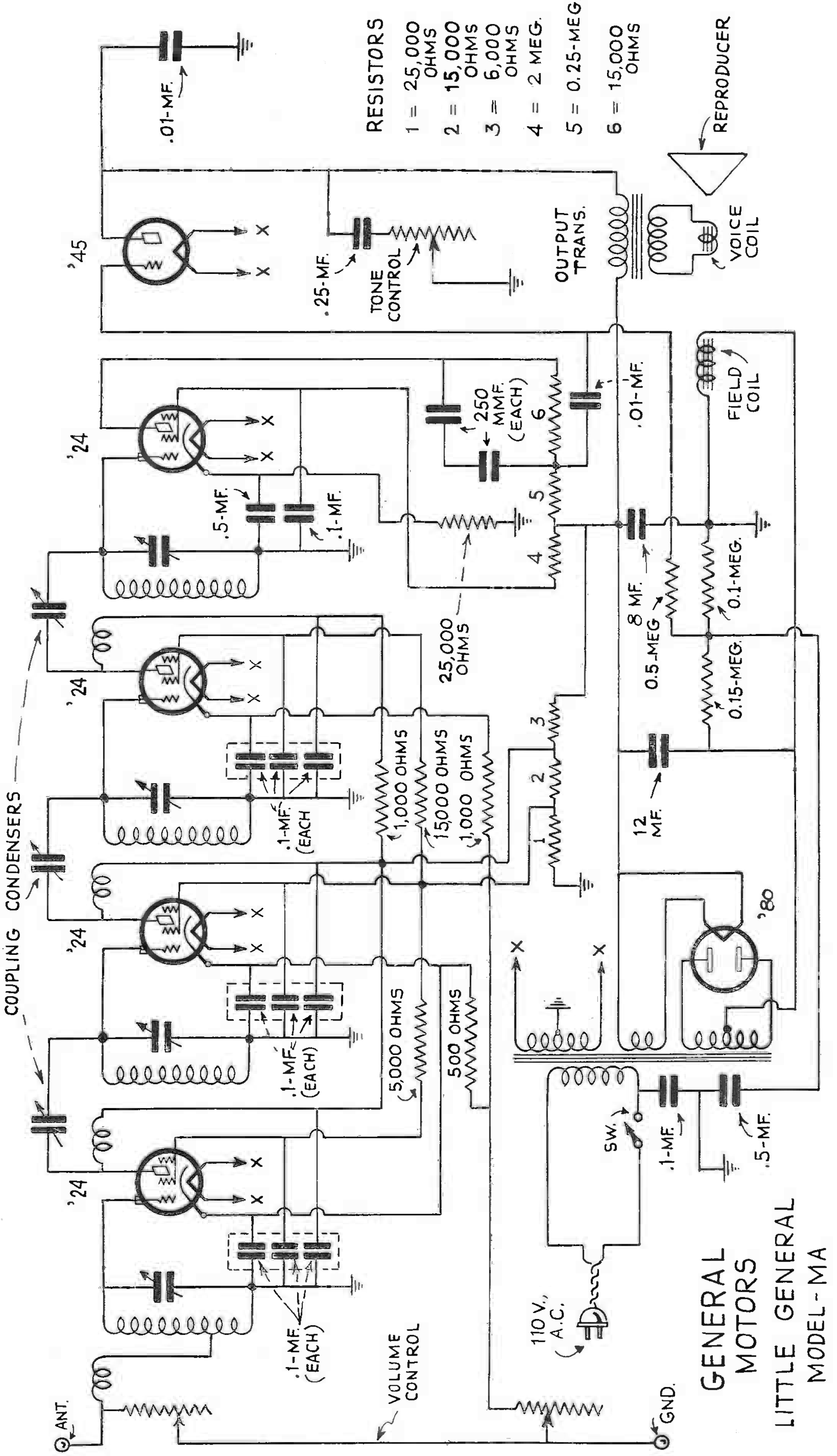

GENERAL MOTORS
LITTLE GENERAL
MODEL-MA

GRIGSBY-GRUNOW CO.

Radio Service Data Sheet

MAJESTIC 9-TUBE SCREEN-GRID SUPERHETERODYNE, A.V.C. MODEL 290 CHASSIS

(Madison Model 291, Adams Model 293 and Monroe Model 294 receivers· incorporates silent tuning and new tube types.)

The circuit in the Model 290 chassis follows in general the connections employed in the earlier models 200, 210 and 220 chasses.

Following are the electrical characteristics of the components of this receiver.

Resistor R1, manual volume control, .25-meg.; R2, noise suppressor, 6,000 ohms; R3, tone control, 50,000 ohms; R4, R8, R14, 0.1-meg.; R5, R9, R10, R11, R12, R13, 0.3-meg.; R6, 5,000 ohms; R7, 10,000 ohms (12,000 ohms, in a few early models); R15, 2,000 ohms; R16, 400 ohms; R17, 700 ohms; R18, 180 ohms; R19, 18,000 ohms; R20, 2,400 ohms; R21, 6,700 ohms; R22, 230 ohms; R23, hum control, 20 ohms, center-tapped. The field coil has a resistance of 1,260 ohms.

Tuning condensers C1, C2, are the R.F. tuning units of 18-363.4-mmf. and condenser C3 is the oscillator tuning unit of 21-335 mmf.; C1A, C2A, R.F. trimmers, 20-30 mmf. and C3A, oscillator trimmer, 20-40 mmf.; C4, C5, C6, C7, I.F. trimmers, 28-190 mmf.; C8, 10 mf. (electrolytic); C9, C11, C13, C15, .25-mf.; C10, .05-mf.; C12, 0.1-mf.; C14, C16, C17, C19, C22, C23, .01-mf.; C18, C21, 500 mmf.; C20, C24, .03-mf.; C25, C26, 8 mf. (electrolytic); C27, 7 mf. (electrolytic); C28, .001-mf.

Condensers C9 to C13 are located in one shield can; units C22, C23, C24, C28 are located in another.

The aligning condensers for this receiver are located on top of the condenser gang. The oscillator is designed to dispense with the "padding" unit required in earlier circuit arrangements.

The current consumption of this receiver is 75 watts.

Operating tube characteristics follow (line potential, 115 V.; silent-tuning control all the way clockwise; all D.C. voltage readings are to ground):

Filament potential, all tubes, 2.5 volts; plate potential, V1, V2, V4, 265 V.; V3 90 V.; V5, 0 V.; V6, 155 V.; V7, 240 V.; V8, 85 V. Cathode potential, V1, V4, 3 V.; V2, 6 V.; V3, 15 V.; V5, V8, 0 V.; V6, 90 V. Plate current, V1, 4.4 ma.; V2, 3 ma.; V3, 1.6 ma.; V4, 5.8 ma.; V5, 0 V.; V6, 0.6-ma.; V7, 28 ma.; V8, 1.4 ma.; V9, 70 ma. (total). Screen-grid potential, V1, V2, V4, 90 V.; V6, 135 V.; V7, 265 V.; V8, 0 V. Screen-grid current, V1, 1.0 ma.; V2, 0.6-ma.; V4, 1.5 ma.; V6, 0.1-ma.; V7, 7 ma.; V8, 0 ma.

To eliminate background noise while tuning, some receiver models incorporate a "mute tuning" switch; to eliminate the need for this manual operation there was developed the "synchronous silent tuning" circuit which is incorporated in the model 290 chassis. To obtain this action a "synchro." tube, V8 in the diagram below, is connected to control the plate-current cutoff of the first A.F. tube V6.

The synchro. tube V8 obtains its plate supply through resistor R6, which also is in the control-grid circuit of A.F. amplifier V6. Tube V8 obtains its control-grid potential from the A.V.C. circuit.

Therefore, when a station carrier is not tuned in, there is no A.V.C. potential and hence the potential of the control-grid of V8 is approximately zero voltage. This causes the plate of V8 to draw current through resistor R6. Now, the voltage drop across this unit biases the control-grid of V6 so high that V6 is "blocked."

On the other hand, when a station is tuned in, an A.V.C. potential develops across load resistors R13 and R14 (in the anode-return circuit of the duodiode tube V5); this A.V.C. potential is impressed in the form of a negative bias on the control-grid of V8.

The plate of V8 now draws little or no plate current and hence the bias across R6 disappears, leaving nothing but the normal operating bias on V6.

In this condition the entire set is operative just as though there were no synchro. tube in the circuit. In fact, it is possible after tuning in a station to remove the synchro. tube without noticing any difference. On the other hand, if this tube is removed when a station is not tuned in, the customary inter-station noises are heard.

Because of the variation in antennas, and noises in different locations, it is necessary to provide a control to govern the point at which the synchro. tube takes hold. Potentiometer R2, the "noise suppressor," is therefore included in the screen-grid circuit of V8.

In correctly setting the value of R2 the following steps should be followed.

(1), Set the suppressor knob to the position of no suppression (full clockwise, facing control);

(2), Tune the receiver to a position off the setting for a station and preferably near the low-frequency end of the dial;

(3), Next, turn the volume-control resistor R1 full on. In this position noise will be heard in a degree dependent upon the location;

(4), Now, adjust the noise suppressor control by rotating counter-clockwise, slowly, until the noise just stops. It will be found that the noise drops out quite suddenly, making it desirable that the control be set only to the position required to take out the noise and no further counter-clockwise than necessary;

(5), Although the set now is in operating condition, it may be found that in some particular locations the noise is greater at one end of the dial than at the other, so that if the noise suppressor is adjusted to take out noise at the low-frequency end of the dial, some noise may come in at the high-frequency end. In this case, it is advisable to readjust the noise suppressor at the high-frequency end of the dial;

(6), The final step in operating this type of circuit concerns its adjustment for greatest sensitivity. When extreme distance reception is desired, without regard to the noise-level between stations, simply turn the "automatic synchro-silent tuning control" knob as far clockwise as possible.

The normal antenna length for this chassis is 40 to 60 feet. The reproducer is a type G-19-A unit having improved characteristics.

The variable-mu characteristic of the type 58 tube makes it particularly suitable as an R.F., first-detector, and I.F. amplifier. The type G-4-S spray-shield duodiode tube used as second-detector and A.V.C., V5, is similar in design to the type G-2-S tube (described in the May, 1932 issue of RADIO-CRAFT), except for the smaller dimensions of the G-4-S; also, the latter tube has a heater current rating of 1. A., against 1.75 A. for the former.

The initial bias on the control-grids of the R.F. and I.F. tubes is obtained from resistor R18; the bias for the first-detector is the drop across R17. To these three tubes is applied the A.V.C. bias potential which is developed across resistors R13 and R14. Resistors R5, R11, R4, and R12, are bypassed filter resistors.

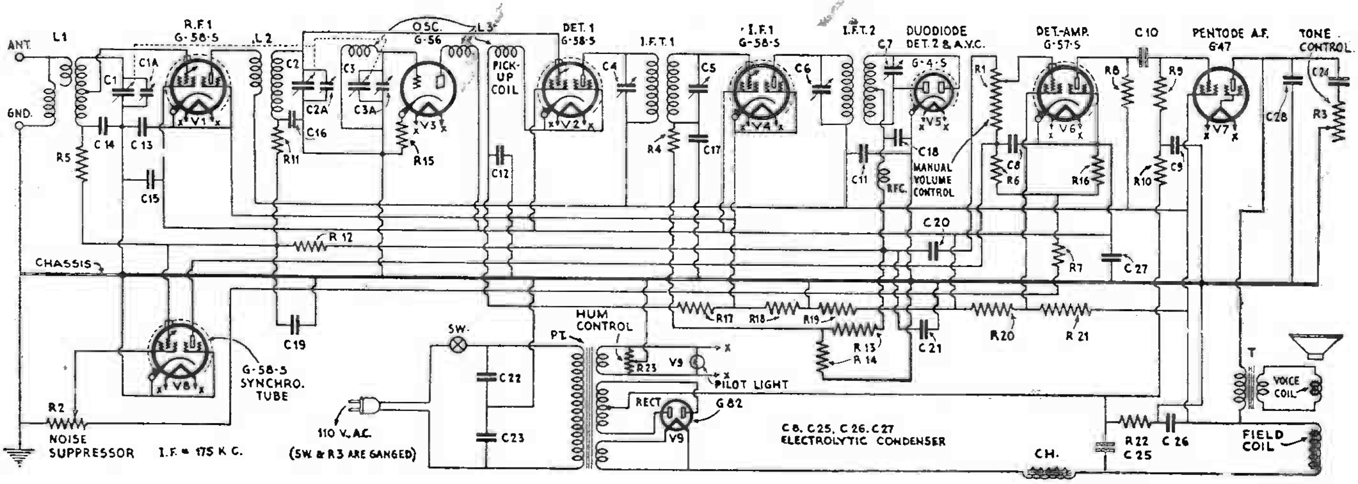

GRIGSBY-GRUNOW CO.

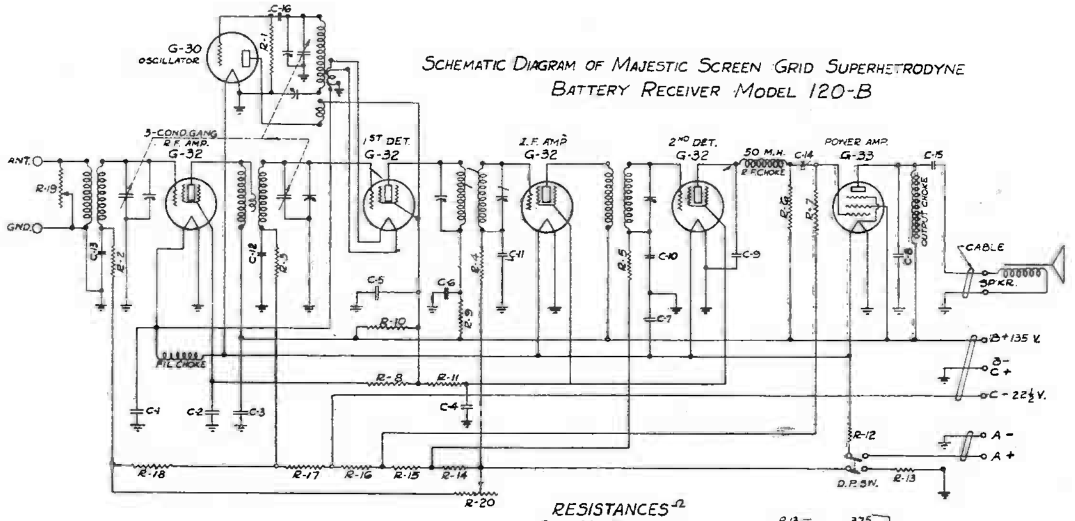

Schematic Diagram of Majestic Screen Grid Superhetrodyne Battery Receiver Model 120-B

CAPACITIES M.F

C1 = .1 }CAN
C2 = .1
C3 = .27
C4 = .1
C5 = .1
C6 = .1
C7 = .1
C8 = 004
C9 = 00025
C10 = .01

C11 = .01
C12 = .01
C13 = .01
C14 = .067 ← TERM. STRIP "A"
C15 = .4
C16 = .00005

RESISTANCES Ω

R1 = 330,000
R2 = 100,000
R3 = 100,000
R4 = 100,000
R5 = 100,000
R6 = 150,000 }TERM. STRIP "A"
R7 = 600,000
R8 = 50,000
R9 = 250
R10 = 20,000
R11 = 50,000
R12 = 0.45

R13 = 375 }TERM. STRIP "B"
R14 = 830
R15 = 920
R16 = 1,500
R17 7,250
R18 2,530
R19 = 10,000 }VOLUME CONTROL
R20 = 10,000

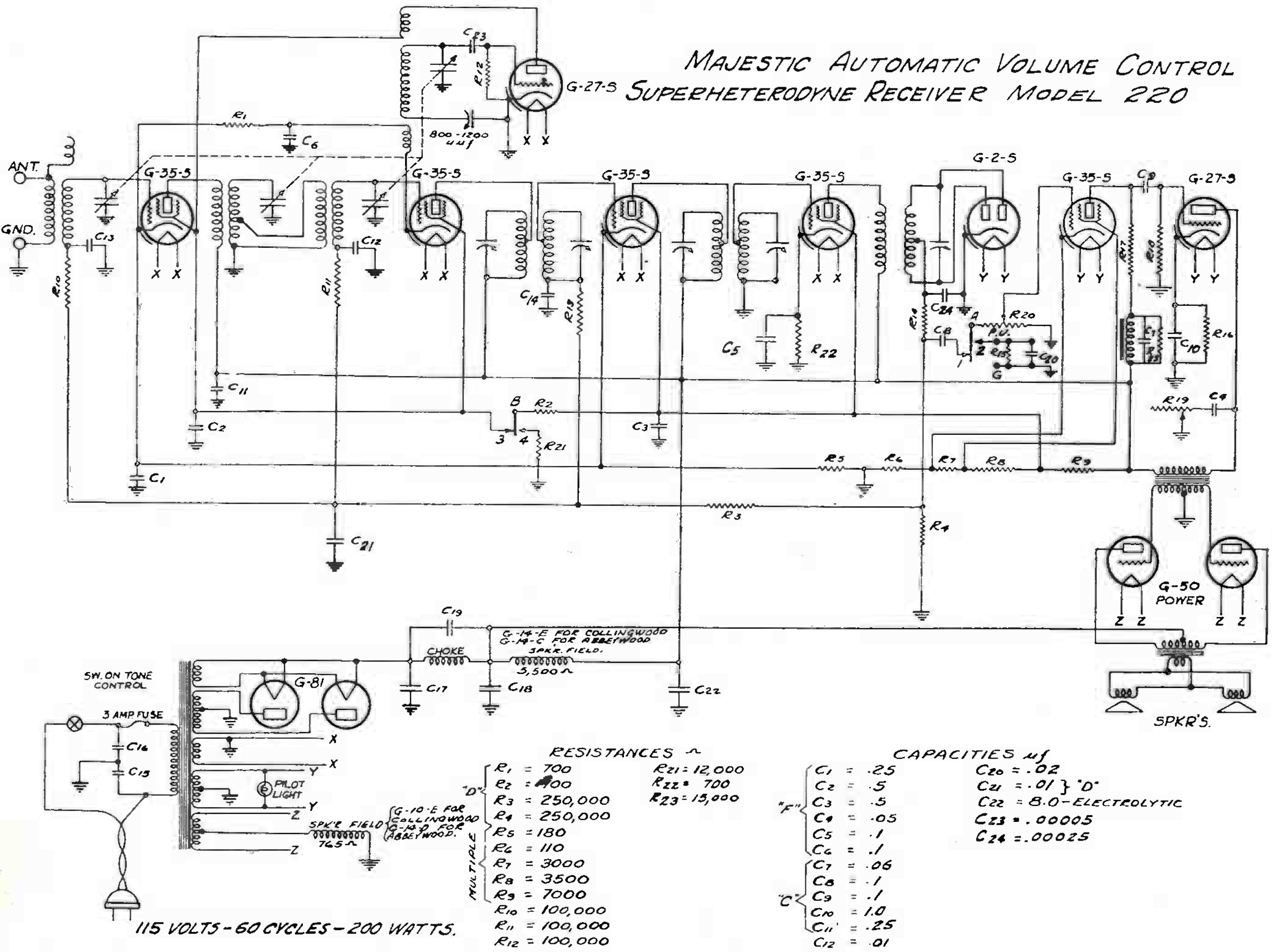

Majestic Automatic Volume Control Superheterodyne Receiver Model 220

115 VOLTS - 60 CYCLES - 200 WATTS.

"A" & "B" = PHONO-RADIO SWITCH
"E" = FILTER COND. CAN
"F" = R.F BY-PASS CAN
"C" = A.F BY-PASS CAN.
"D" = RESISTOR STRIP

RESISTANCES Ω

"D" R1 = 700
"D" R2 = 400
"D" R3 = 250,000
"D" R4 = 250,000
MULTIPLE R5 = 180
MULTIPLE R6 = 110
MULTIPLE R7 = 3000
MULTIPLE R8 = 3500
MULTIPLE R9 = 7000
R10 = 100,000
R11 = 100,000
R12 = 100,000
R13 = 100,000
R14 = 25,000
R15 = 30,000
R16 = 4000
R17 = 25,000
R18 = 1,000,000
R19 = 50,000
R20 = 200,000

R21 = 12,000
R22 = 700
R23 = 15,000

CAPACITIES μf

"F" C1 = .25
"F" C2 = .5
"F" C3 = .5
"F" C4 = .05
"F" C5 = .1
"F" C6 = .1
"C" C7 = .06
"C" C8 = .1
"C" C9 = .1
"C" C10 = 1.0
"C" C11 = .25
C12 = .01
C13 = .01
C14 = .01
"E" C15 = .01
"E" C16 = .01
"E" C17 = 2.0
"E" C18 = 4.0
"E" C19 = .25

C20 = .02
C21 = .01 } "D"
C22 = 8.0-ELECTROLYTIC
C23 = .00005
C24 = .00025

GRIGSBY-GRUNOW CO.
CHICAGO, U.S.A

HALSON RADIO MFG. CO.

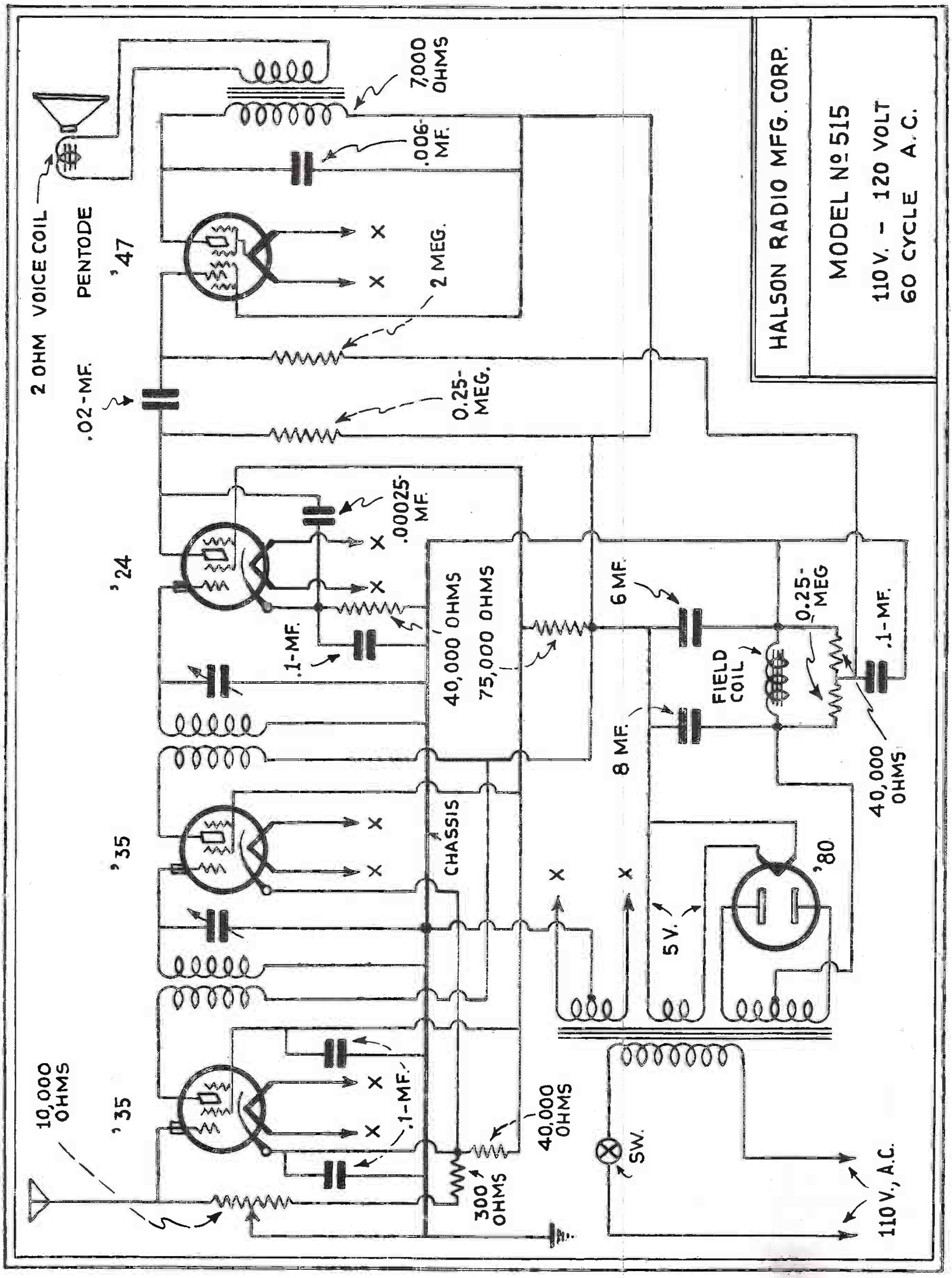

HALSON RADIO MFG. CORP.

MODEL Nº 515

110 V. - 120 VOLT
60 CYCLE A.C.

HALSON RADIO MFG. CO.

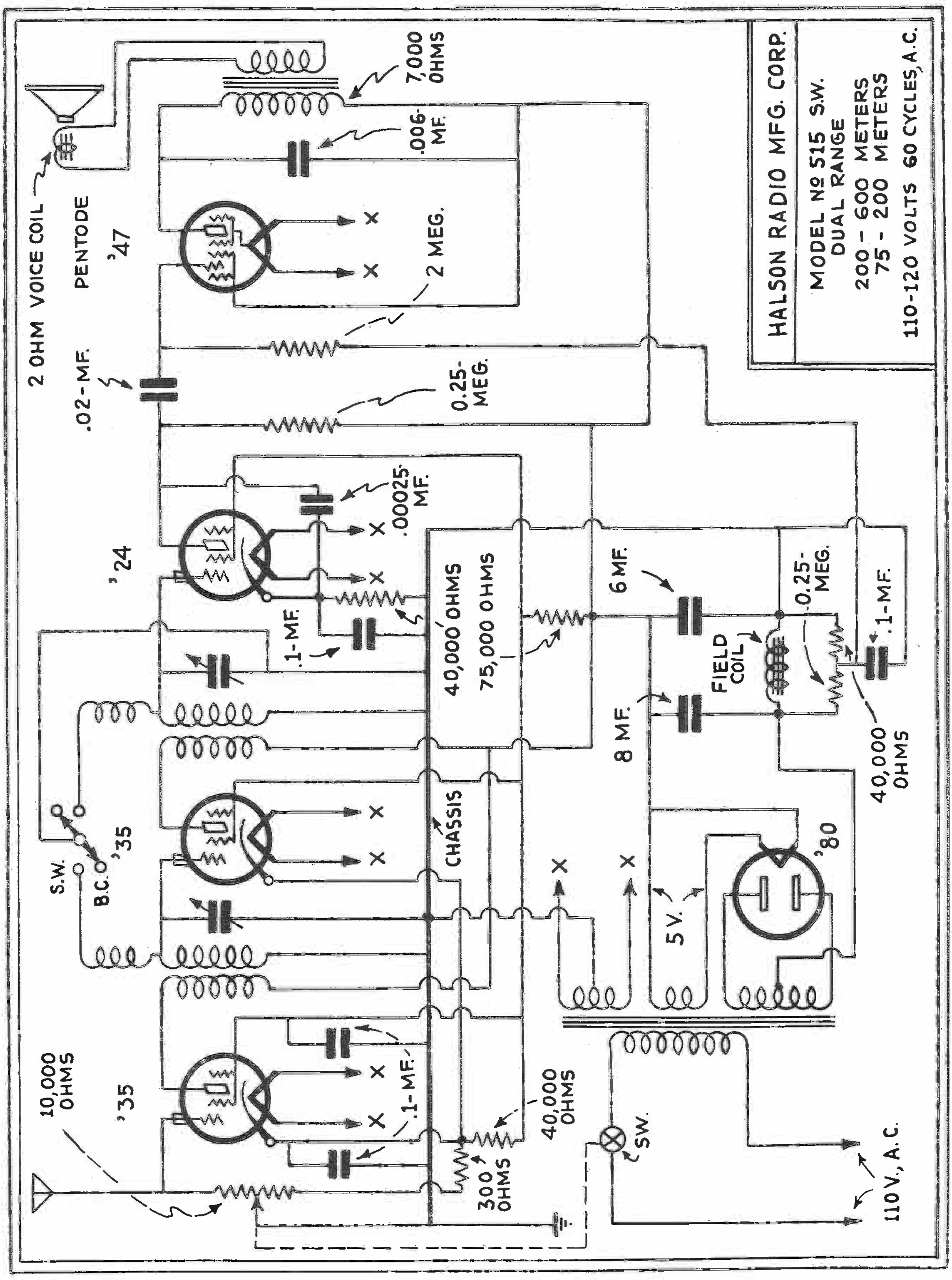

HALSON RADIO MFG. CO.

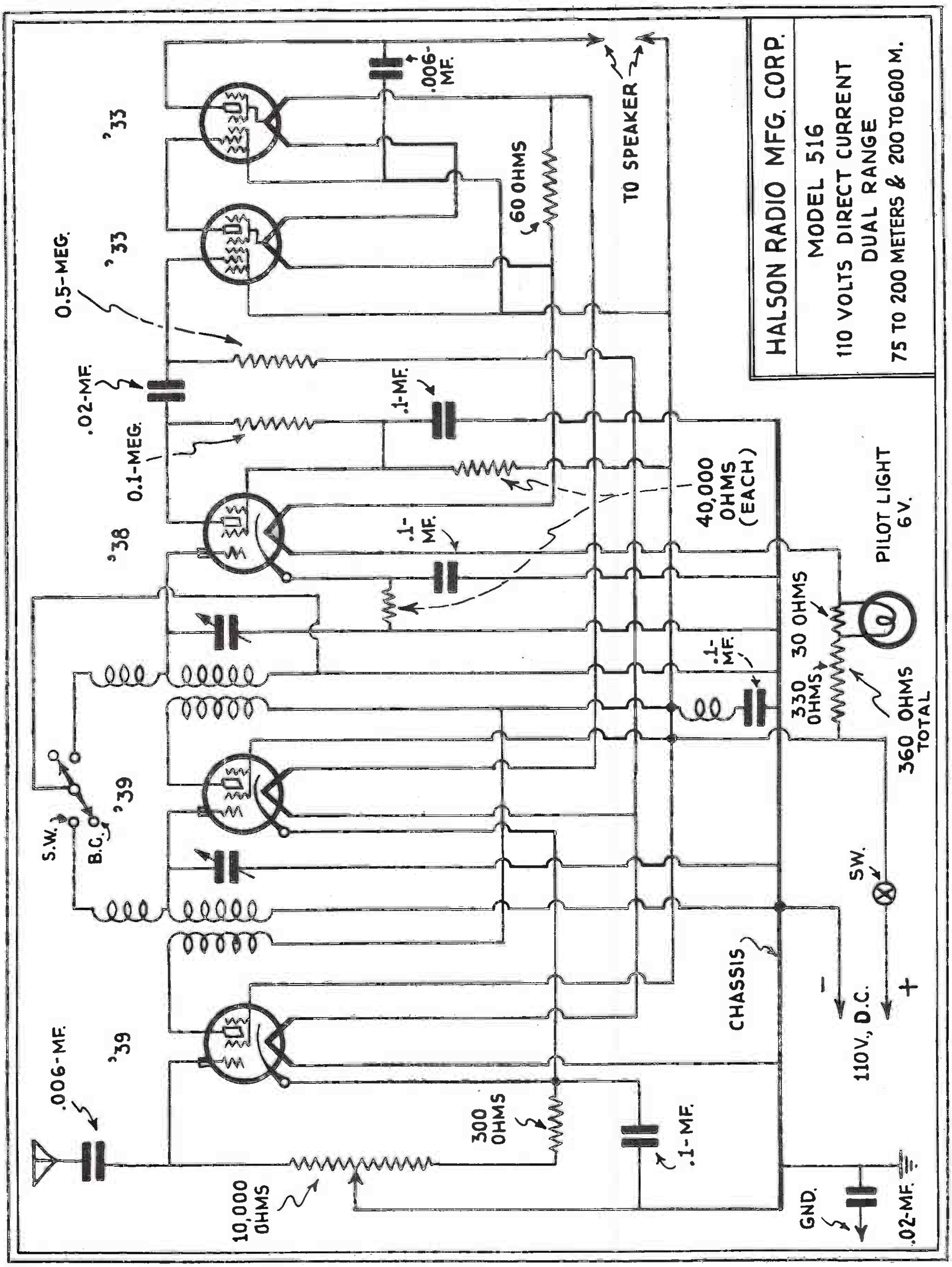

HALSON RADIO MFG. CO.

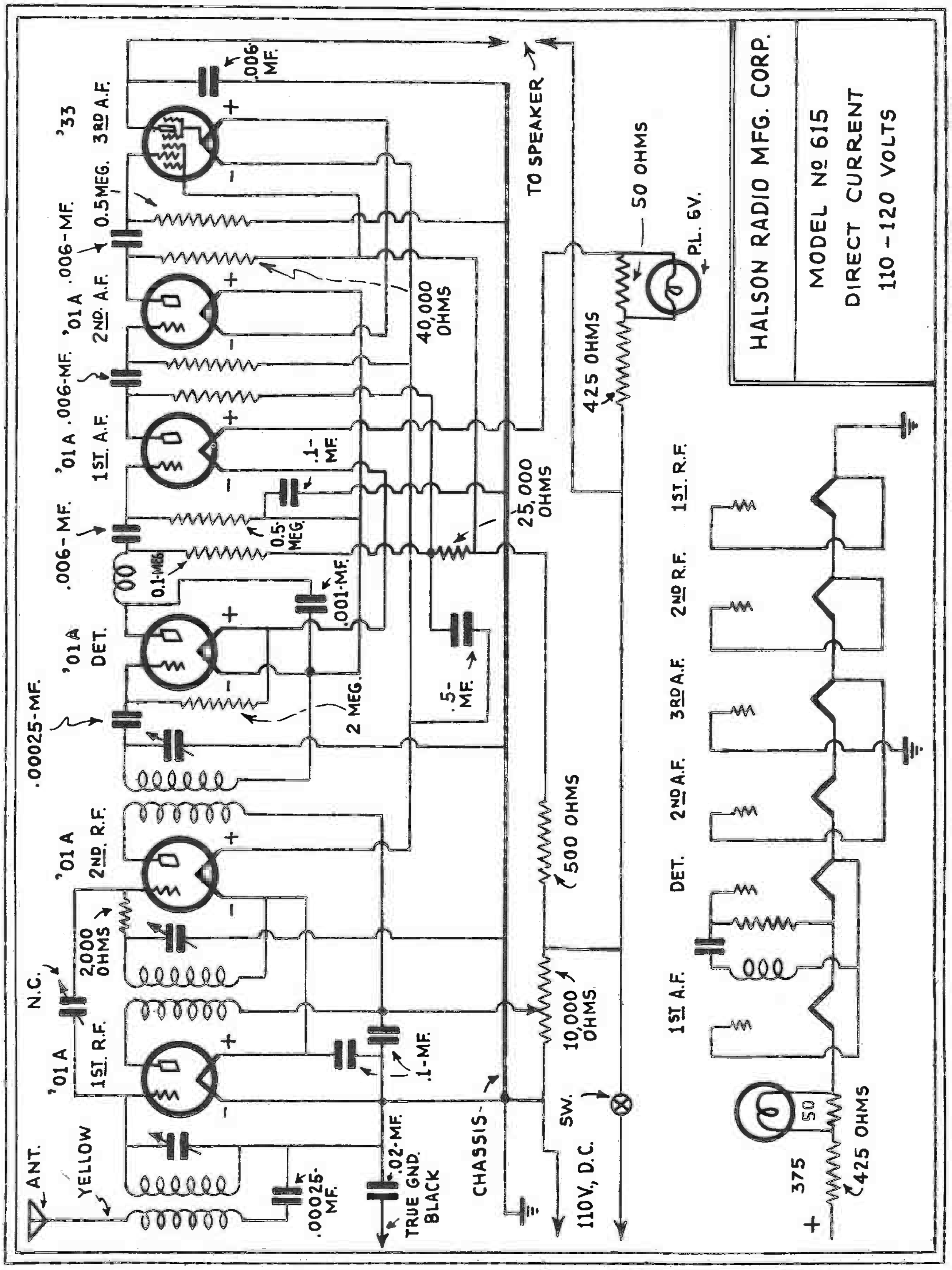

HALSON RADIO MFG. CO.

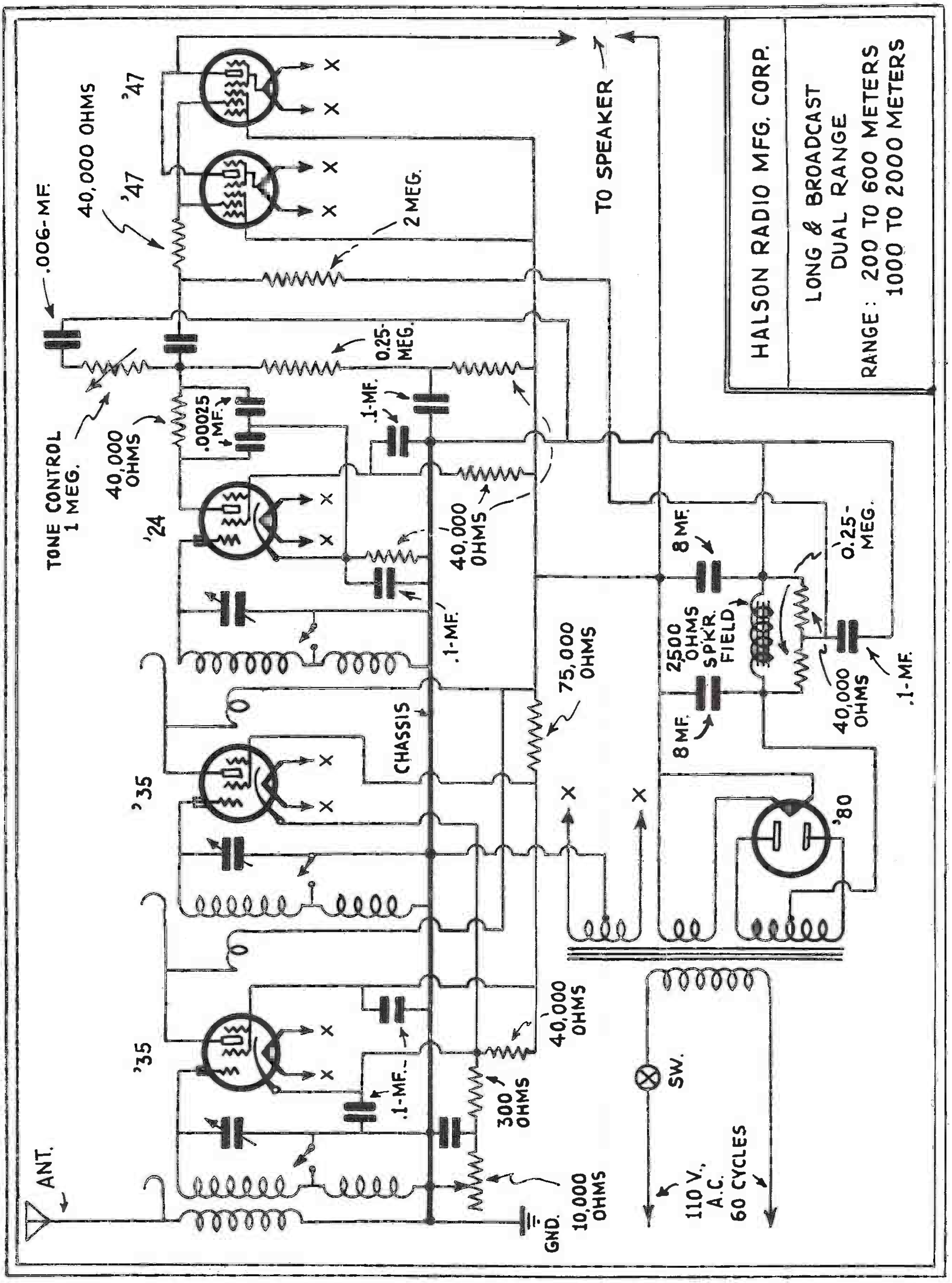

HAMMARLUND MFG. CO.

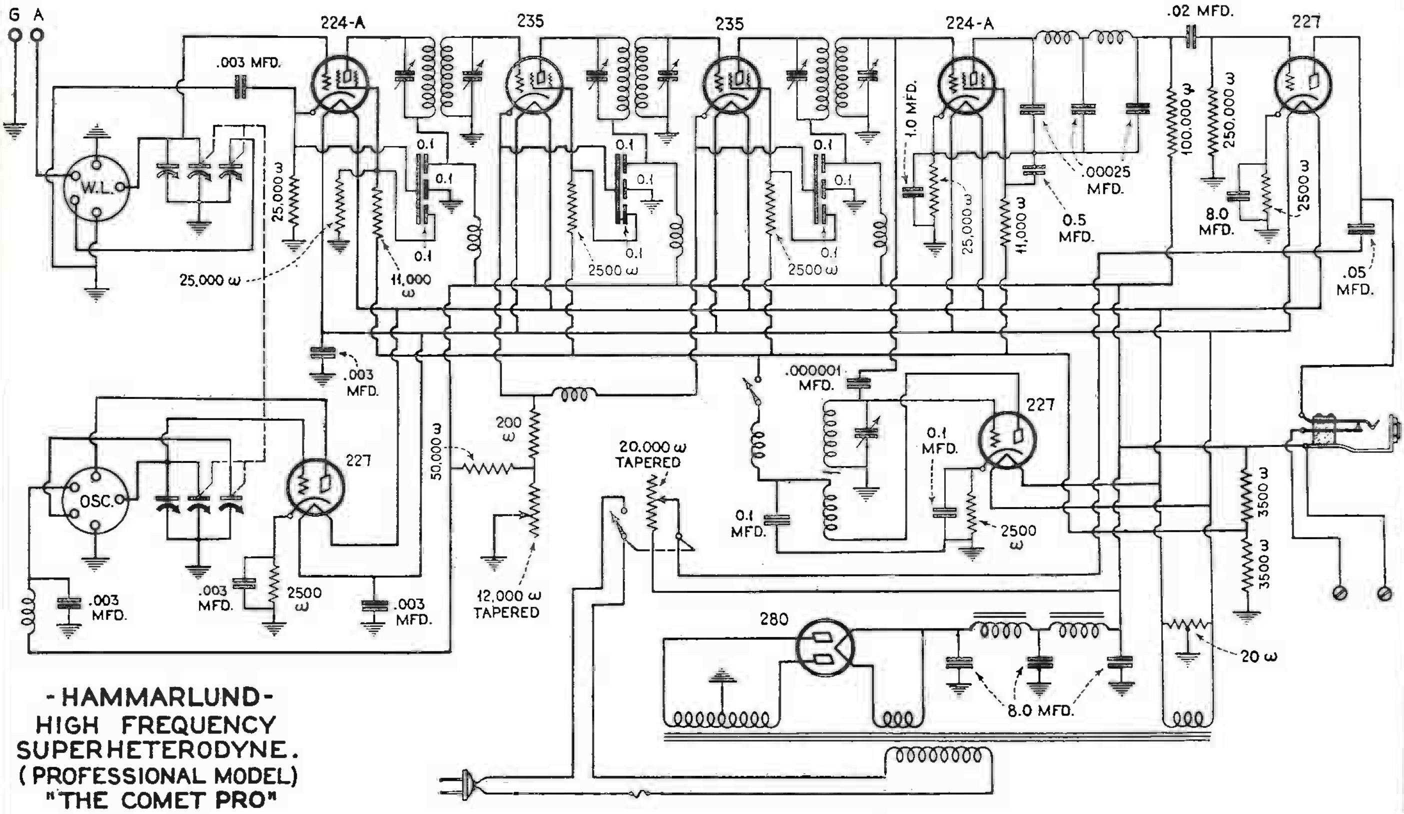

- HAMMARLUND -
HIGH FREQUENCY
SUPERHETERODYNE.
(PROFESSIONAL MODEL)
"THE COMET PRO"

Operating Details

The set is turned on and off by means of the lower left-hand knob. This knob is a combination switch and tone control; the tone control attenuates the higher audio frequencies and serves to reduce the noise under certain receiving conditions. The lower right-hand knob is the sensitivity control and should be advanced to the point where a slight rushing sound is heard when searching for stations.

The toggle switch at the center of the panel below the main tuning knob controls the intermediate oscillator which enables the reception of C.W. code signals and greatly facilitates searching for "phone" carrier waves.

The two Isolantite sockets in the center of the chassis are for the interchangeable tuning coils. Coils marked "OSC" go in the left-hand socket (looking at the receiver from the front) and those marked "W.L." go in the right-hand socket. Although the receiver will not function properly no damage will be done if a coil is accidentally inserted in the wrong socket.

Although the tuning system ot the receiver has already been described in detail an actual illustration is given below. To set the receiver to the 3.5 to 4 mega-cycle amateur band, proceed as follows:

Plug in the "C" coils (C-OSC) in the left-hand Isolantite socket.
Set the band spread dial at 50.
Set the two "tank" dials at 35 (per Fig. 6).

The receiver will then be tuned to approximately 3700 K.C. and the band spreading dial alone, after slight readjustment of both "tank" dials, will cover the entire band of frequencies between 3500 K.C. (at about 10) and 4000 K.C. (at about 90). In the same manner the receiver can be set to any other band.

Of course, if desired, the receiver can be tuned just like any other two dial receiver, merely by ignoring the band spreader dial and rotating the two tank condenser dials approximately in step with each other. If the band spreader dial is set at 50 during this operation, it can be used as a vernier after a station is located. Thereafter, any other stations known to be on frequencies but slightly different from that of the station tuned may easily be located by the band spreader dial alone.

The following list of approximate voltages is given for checking purposes. All circuit constants are given in the circuit diagram. A D.C. voltmeter having a resistance of at least 1000 ohms per volt should be used for checking. With the negative terminal of the meter connected to the chassis the following readings should be obtained:

	Volts	(Approximately)
Top terminal of voltage divider	175	"
Second terminal of voltage divider	80	"
Third terminal of voltage divider	0	
Bottom terminal of voltage divider	0	
K terminal of first detector	5	"
K terminal of H.F. oscillator	30	"
K terminal of first and second I.F. (Max.)	32	"
(Varies with volume control setting) (Min.)	2	"
K terminal of first A.F.	12	"
K terminal of second detector	8	"
K terminal of I.F. oscillator	12	"
(When oscillator is turned on)		
P terminal of second detector	110	"
P terminal of H.F. oscillator, first and second I.F., first detector and first A.F. (with phones or speaker connected)	175	"
P terminal of I.F. oscillator	80	"
G terminal of first detector	55	"
G terminal of first and second I.F. and second detector	75	"

HIGH FREQUENCY LAB.

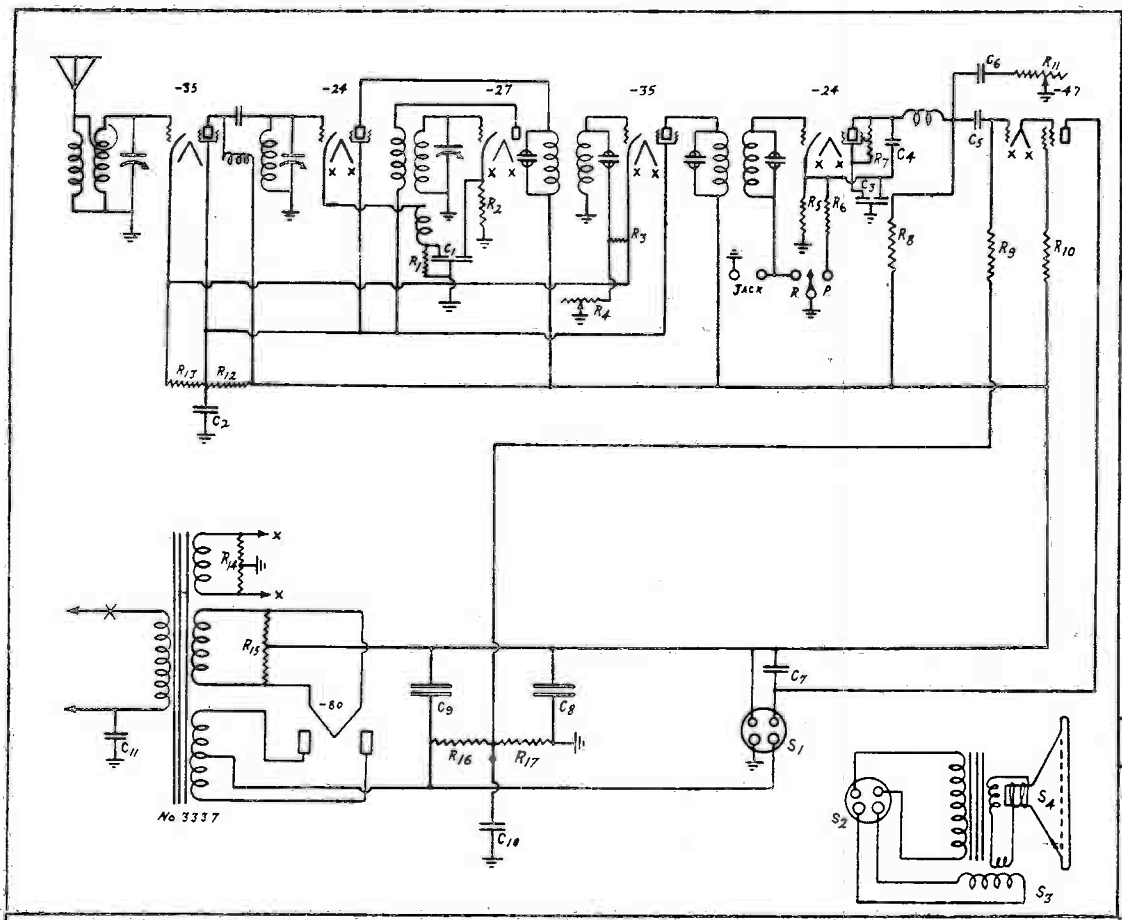

Design Data.

R_1 25.000Ω 1-3W.
R_2 2000Ω 1-3W.
R_3 400Ω 1-3W
R_4 15.000Ω
R_5 50.000Ω 1-3W.
R_6 400Ω 1-3W.
R_7 1 Meg 1-3W.
R_8 250.000Ω 1-3W.
R_9 500.000Ω 1-3W.
R_{10} 3000Ω 1-3W.
R_{11} 500.000Ω
R_{12} 15.000Ω 1W.
R_{13} 35.000Ω 1-3W.
R_{14} R_{15} 50Ω Cen. Tap.
R_{16} 5 Meg 1-3W.
R_{17} 2 Meg. 1-3W.
C_1 C_3 2X.1 m.f.d. Lg. Com.
C_2 .1
C_4 .00025
C_5 C_6 C_7 .006
C_8 C_9 4 m.f.d. 400 V.
C_{10} C_{11} .1

S_1 Speaker Socket
S_2 Speaker Plug
S_3 2500Ω Field.
S_4 Speaker # 8320.

Drawn By. H. M. 8-24-31.
Revisions. 8-28-31.

#226

7-Tube Super No. 222

High Frequency Lab.
Chicago.

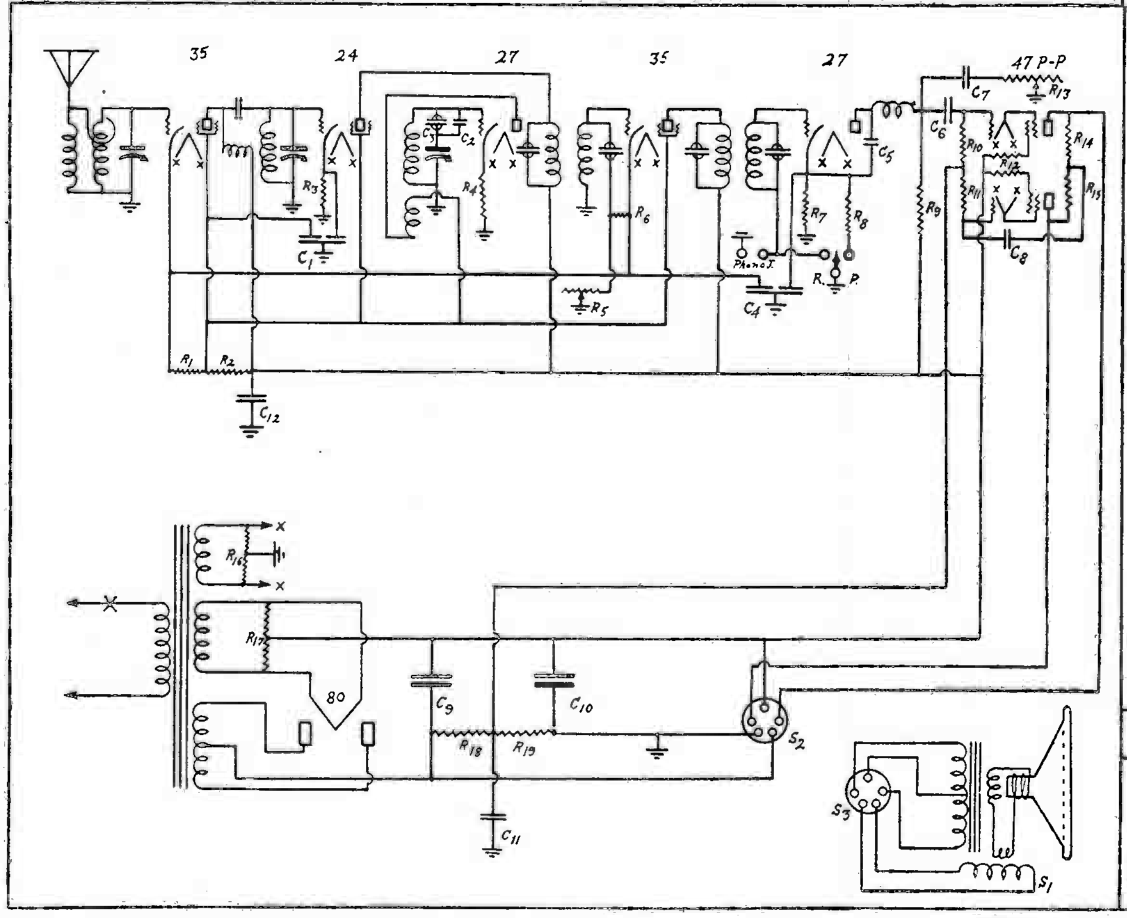

Design Data

R_1 25.000Ω 1-3W.
R_2 25.000Ω 1W.
R_3 10.000Ω 1-3W.
R_4 2000Ω 1-3W.
R_5 15.000Ω
R_6 400Ω 1-3W.
R_7 35.000Ω 1-3W.
R_8 2000Ω 1-3W.
R_9 200.000Ω 1-3W.
R_{10} R_{11} 750.000Ω 1-3W.
R_{12} 3000Ω 1-3W. each.
R_{13} 500.000Ω Elf.
R_{14} R_{15} 250.000Ω 1-3W.
R_{16} R_{17} 50Ω Cen. Tap.
R_{18} 5 Meg. 1-3W.
R_{19} 2 Meg. 1-3W.
C_1 2X.1 m.f.d. End. Com.
C_2 .00075
C_3 I.C.S. 220 Padder.
C_4 2x.1 m.f.d. Lug. Com.
C_5 .00075
C_6 C_7 C_8 .006
C_9 C_{10} 8 m.f.d. 450 V.
C_{11} .5
C_{12} .1
S_1 1000Ω Field.
S_2 Speaker Socket.
S_3 Speaker Plug.

Drawn By. H. M. 9-24-31.
Revisions.

#242

SUPER № 117-4

High Frequency Lab.
Chicago.

HIGH FREQUENCY LAB.

#225

5-Tube Set #208-1

High Frequency Lab.
Chicago

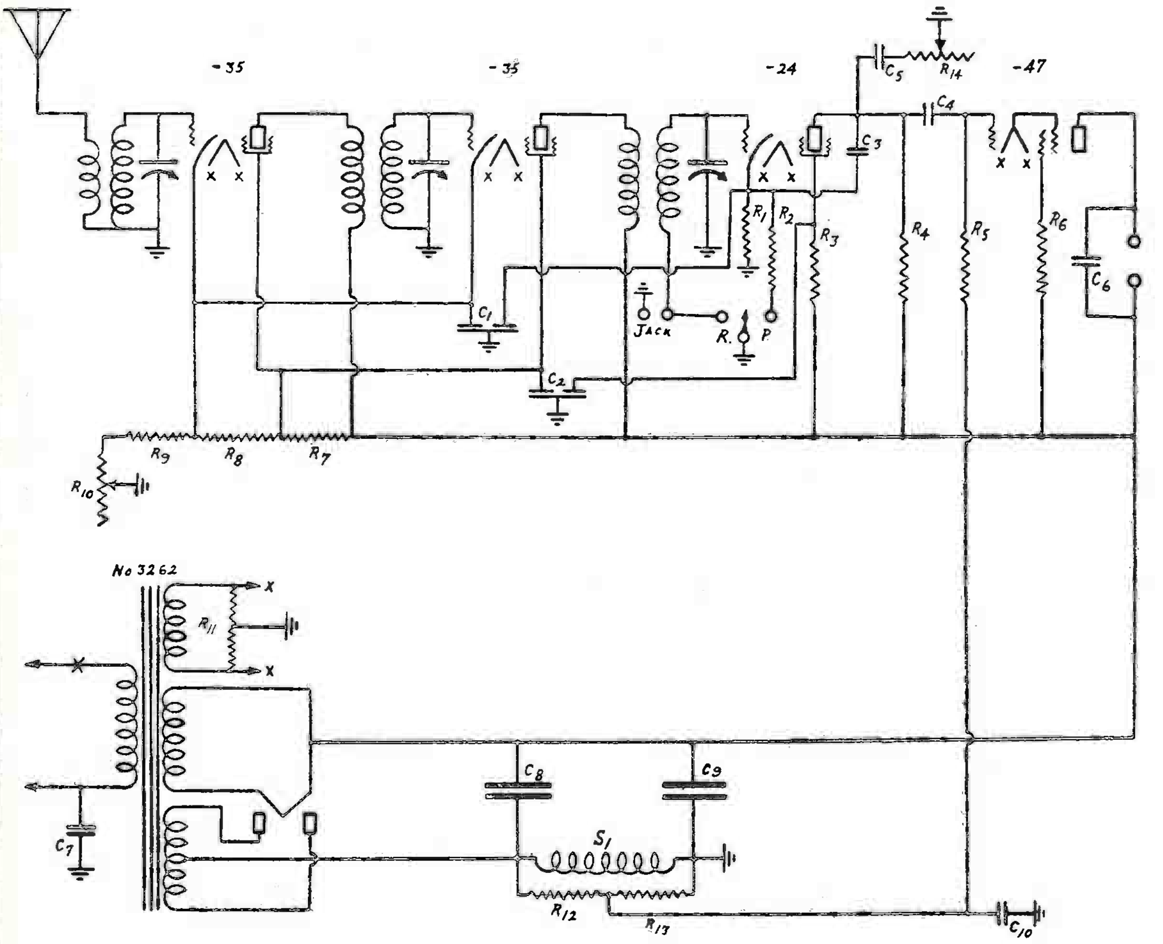

Design Data

R_1	50.000Ω 1-3W
R_2	400Ω 1-3W.
R_3	3Meg. 1-3W.
R_4	500.000Ω 1-3W
R_5	1Meg. 1-3W.
R_6	3MΩ 1-3W.
R_7	50.000 1.W.
R_8	50000 1-3W.
R_9	200Ω 1-3W.
R_{10}	C.P.S. 15MΩ
R_{11}	50Ω Cen. Tap.
R_{12}	5Meg. 1-3W.
R_{13}	1.5 Meg. 1-3W.
R_{14}	500.000Ω
C_1	2X.1mfd
C_2	2X.1 m.f.d.
C_3	.0005
C_4	.02
C_5	.006
C_6	.006
C_7	.02
C_8	4m.f.d. 400V.
C_9	4m.f.d. 400V.
C_{10}	.1
S_1	Spkr. Field 2500Ω

#238

Set No 160-3
4-Tube.

High Frequency Lab.
Chicago.

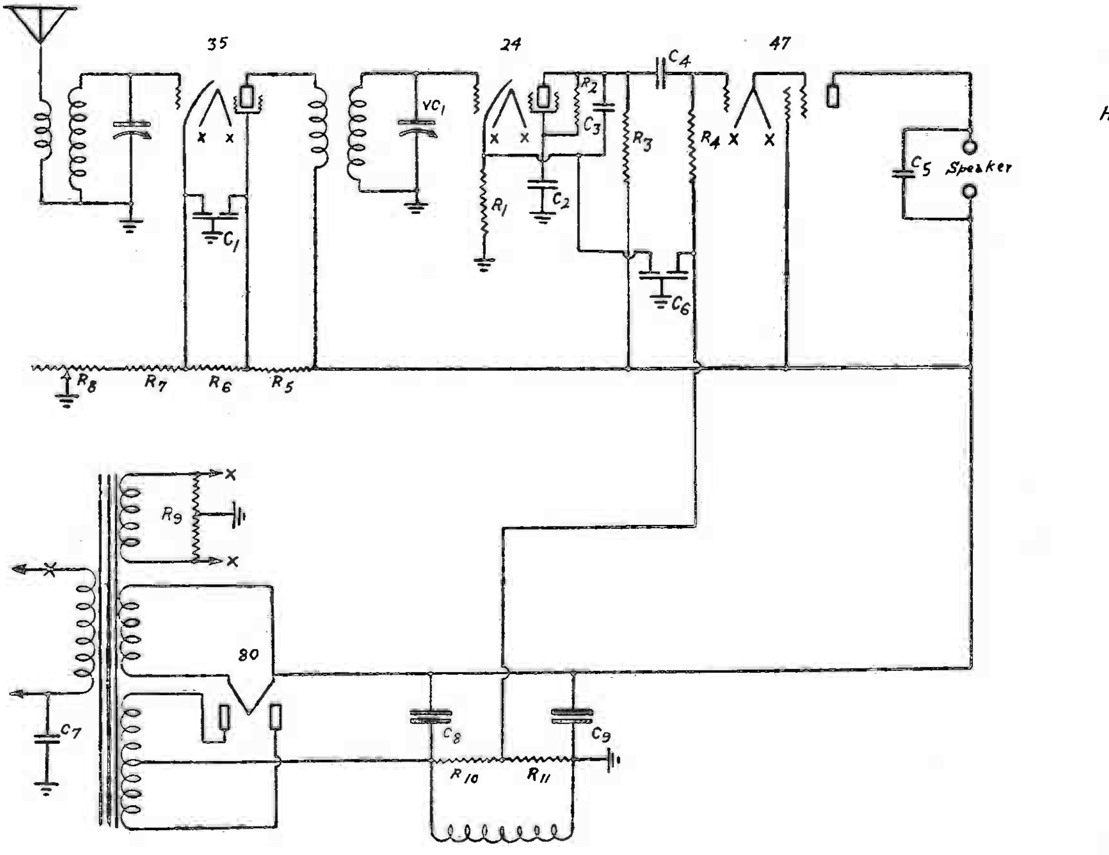

Design Data

R_1	25.000 1-3W.
R_2	1Meg. 1-3W.
R_3	500.000 1-3W.
R_4	3meg 1-3W.
R_5	25000 1-3W.
R_6	25.000 1-3W.
R_7	400Ω 1-3W.
R_8	15.000Ω
R_9	50Ω Cen.tap.
R_{10}	5meg. 1-3W.
R_{11}	1meg. 1-3W.
C_1	2X.1
C_2	.006
C_3	.00075
C_4	.02
C_5	.006
C_6	.2X.1
C_7	.02
C_8 C_9	4m.f.d. 400V.
VC_1	410 m.m.f.
S_1	2500Ω Field.

HIGH FREQUENCY LAB.

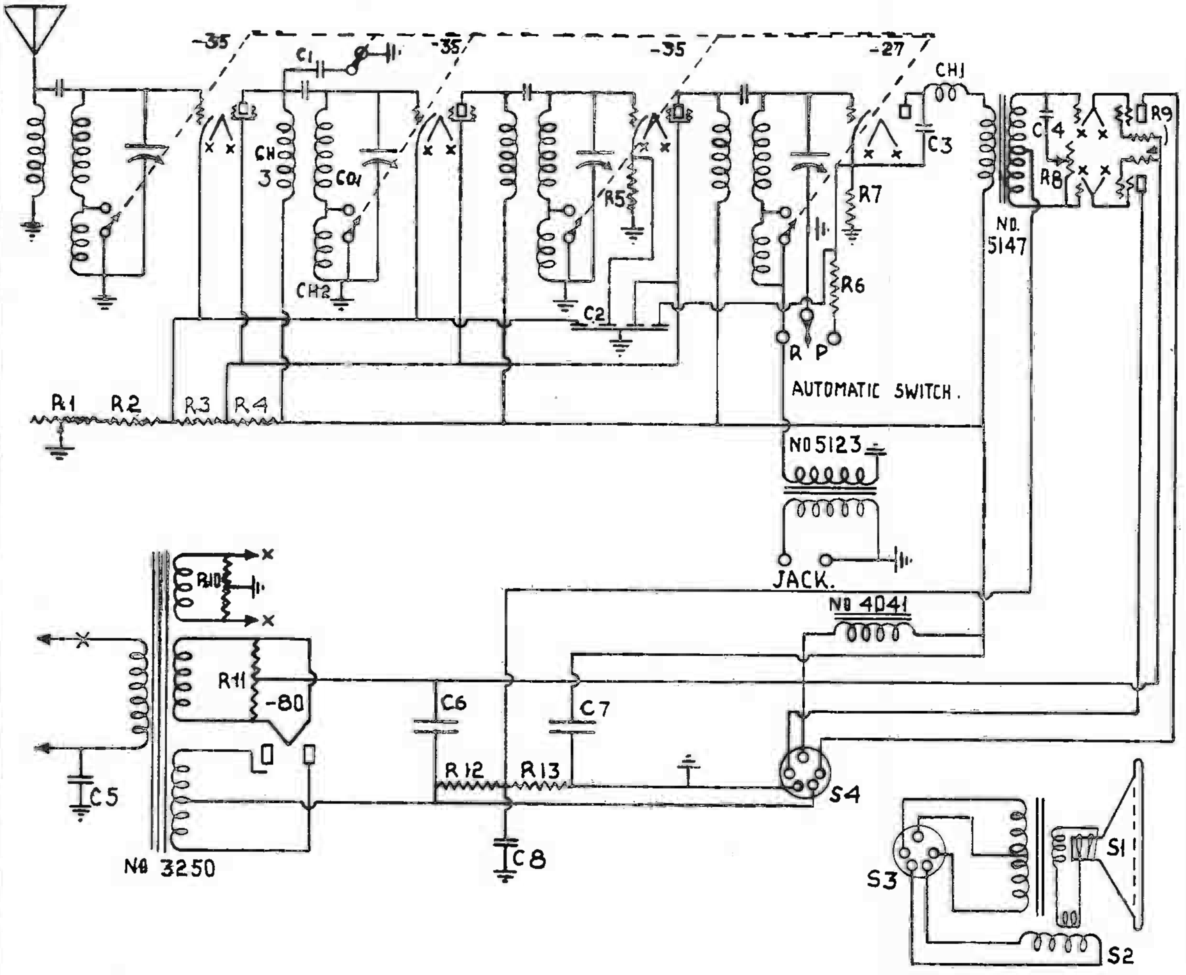

#227

EUROPEAN SET No 200
200–2000 λ
High Frequency Lab.
Chicago U.S.A.

Design Data.

R1 15000Ω
R2 400Ω 1-3 W.
R3 50.000Ω 1.3 W.
R4 35.000Ω 1 W.
R5 1000Ω 1-3 W.
R6 3000Ω 1-3 W.
R7 100.000Ω 1.3 W.
R8 500.000 Ω
R9 3000Ω 1-3 W EACH.
R10 R11 50Ω CEN TAP.
R12 750.000Ω .1.3 W
R13 350.000Ω 1.3 W
C1 .001
C2 4X.1 MFD.
C3 .00075
C4 .006
C5 .1
C6 C7 8 MFD. 450 V.
C8 .5
S1 SPKR. NO 10003
S2 1000Ω FIELD
S3 SPKR PLUG
S4 SPKR SOCKET
CH1 85 M.H. CHOKE SHLD
CH2 2.5 M.H. SHIELDED (4)
CH3 85 M.H. SHIELDED (4)
CC1 124 T LITZ. SHIELDED (4)

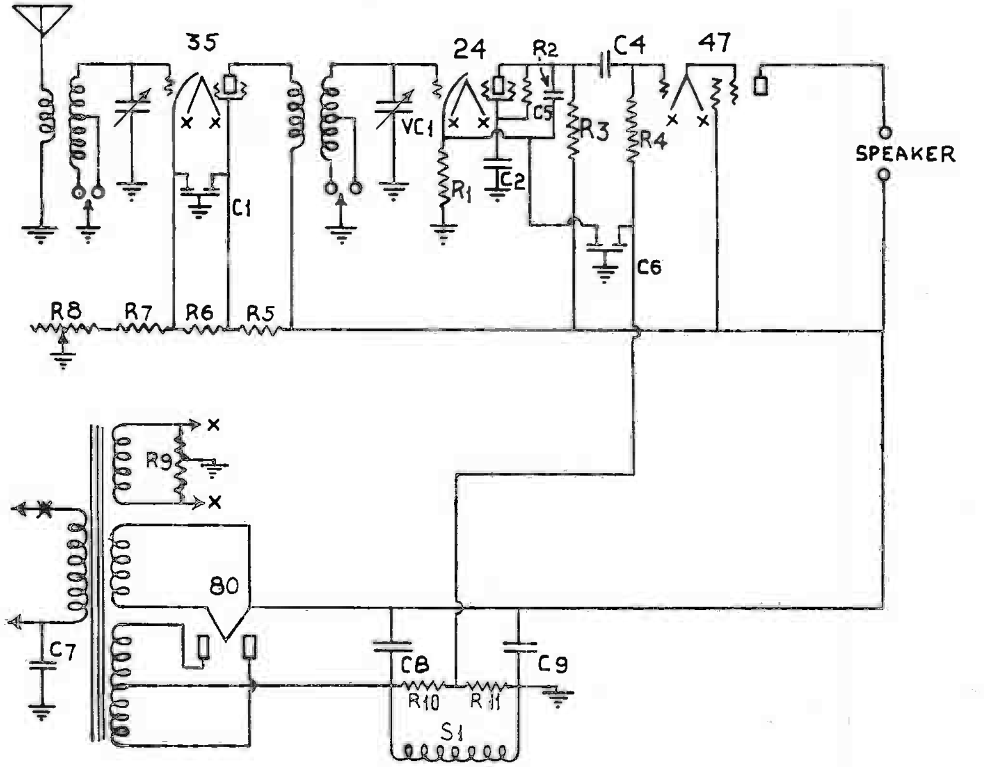

DESIGN DATA

R1 25 MΩ $\frac{1}{3}$ W
R2 1 MEG Ω $\frac{1}{3}$ W
R3 500 M Ω $\frac{1}{3}$ W
R4 3 MEG Ω $\frac{1}{3}$ W
R5 25 M Ω $\frac{1}{3}$ W
R6 25 M Ω $\frac{1}{3}$ W
R7 200 Ω $\frac{1}{3}$ W.
R8 15 M Ω
R9 50 Ω C.T.
R10 5 MEG Ω $\frac{1}{3}$ W.
R11 1 MEG Ω $\frac{1}{3}$ W

C1 2 x .1
C2 .02
C3 .0005
C4 .02
C6 2 x .1
C7 .02
C8 4 MF 500 V
C9 4 MF 500 V

VC1 370 MMF

S1 2500 Ω
SPKR FIELD

3 · 23 · 32
DRAWN G. E. S.

#280

4 TUBE SET
#160-6
HIGH FREQUENCY
LABS.

CHAS. HOODWIN CO.

Series B 1932
AERO world wide

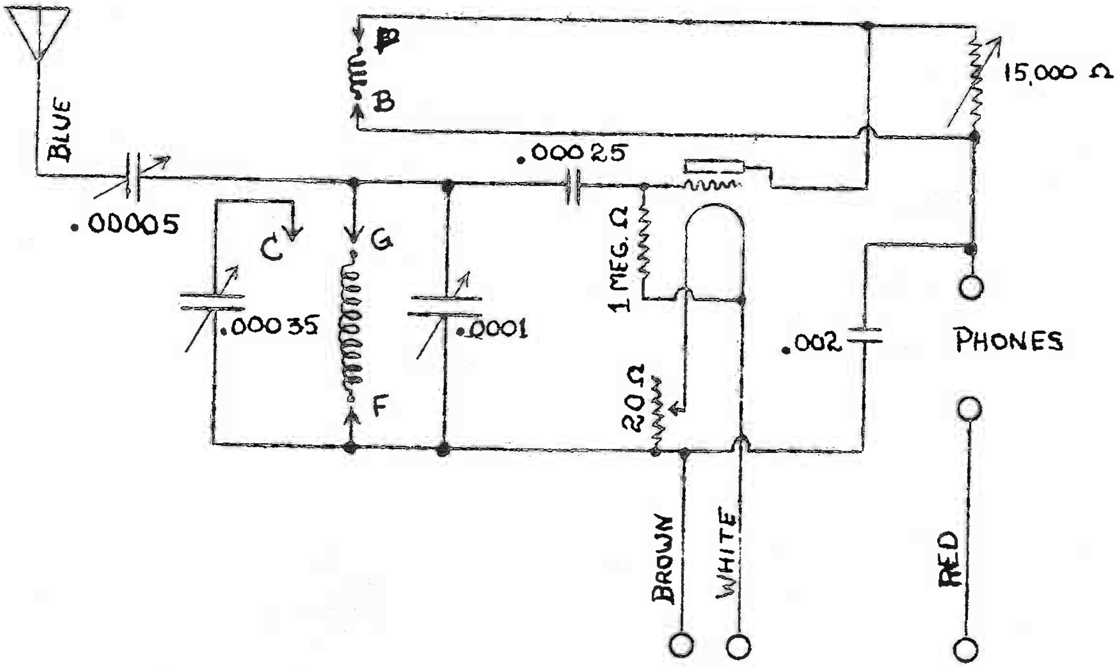

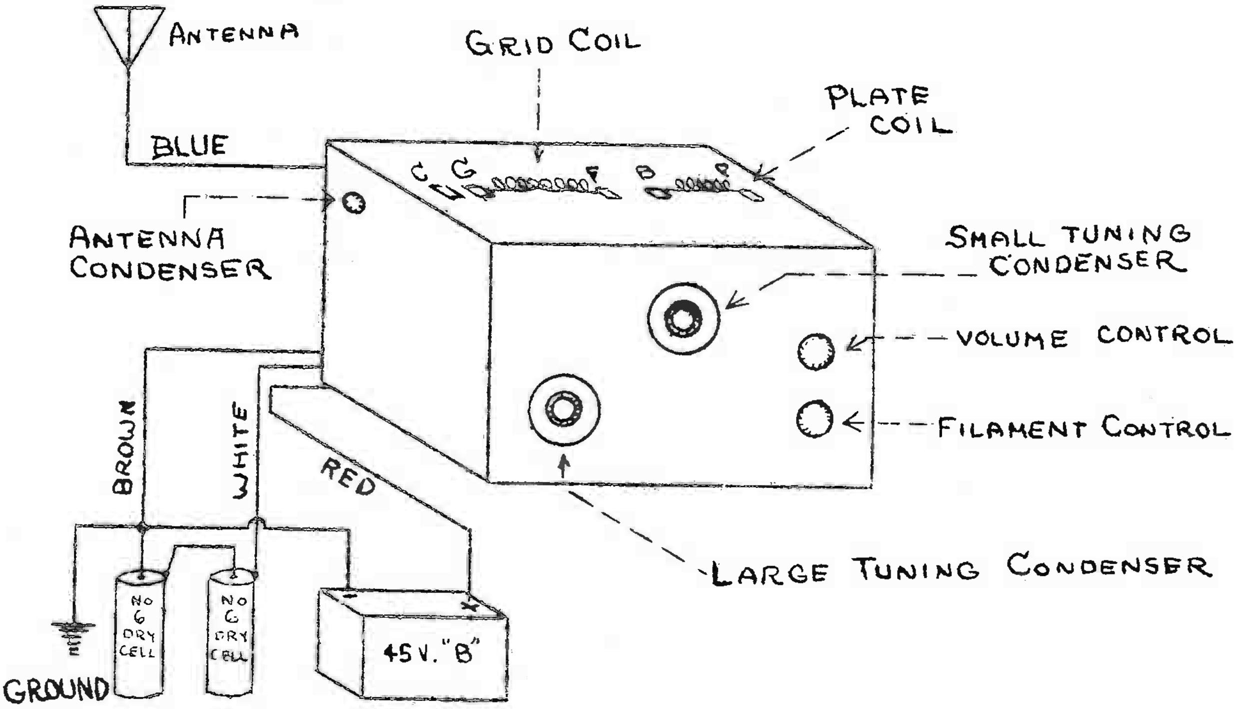

BLUE WIRE TO ANTENNA.
WHITE WIRE TO NEGATIVE "A" (–).
BROWN WIRE TO POSITIVE "A" (+).
"B" (–), NEGATIVE, AND GROUND
ARE ALSO CONNECTED TO THE
BROWN WIRE.

CHAS. HOODWIN CO.

AERO PENTODE AUTO RADIO

1932

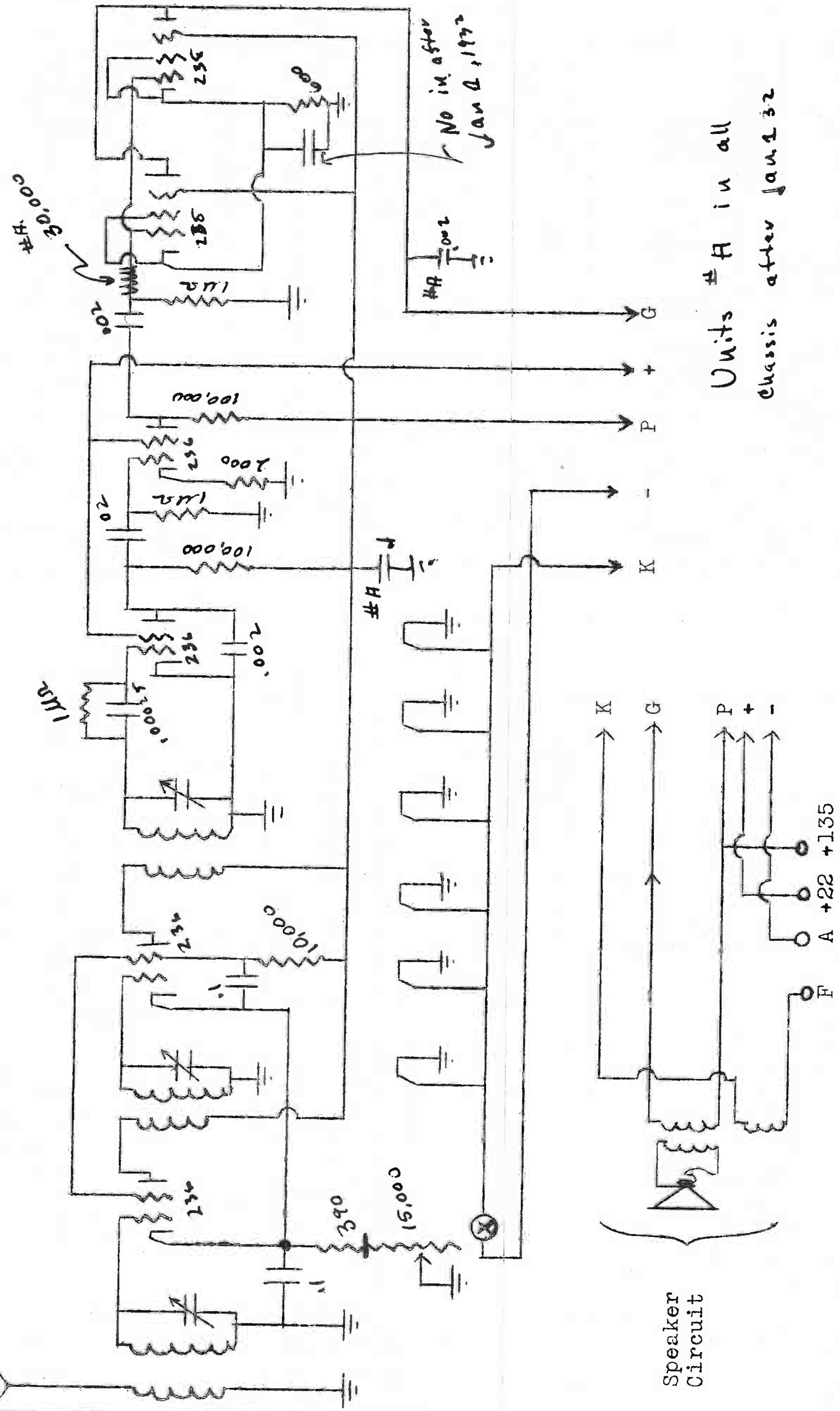

No in after Jan 1, 1932

Units #A in all chassis after Jan 1 32

CHAS. HOODWIN CO.

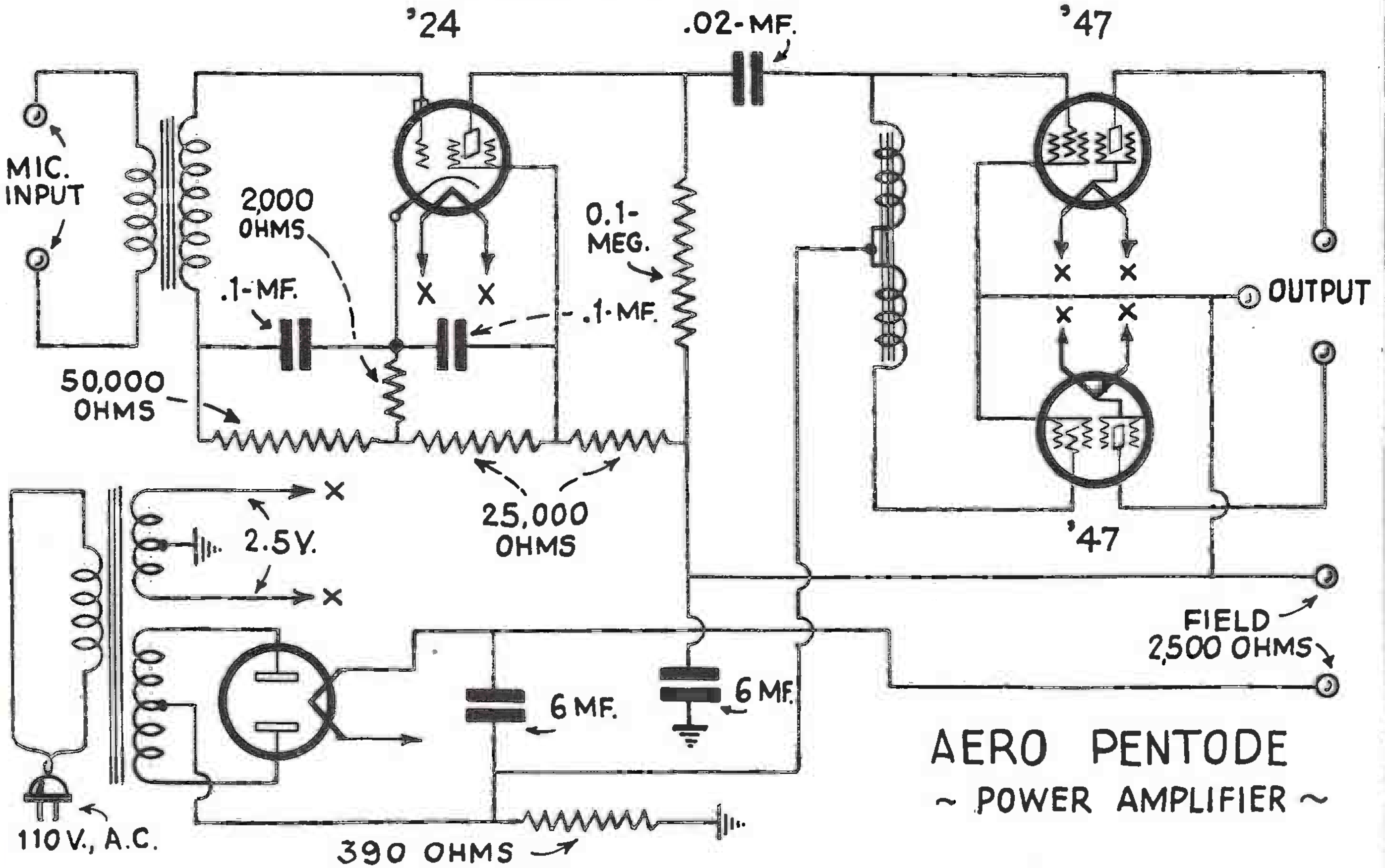

AERO PENTODE
~ POWER AMPLIFIER ~

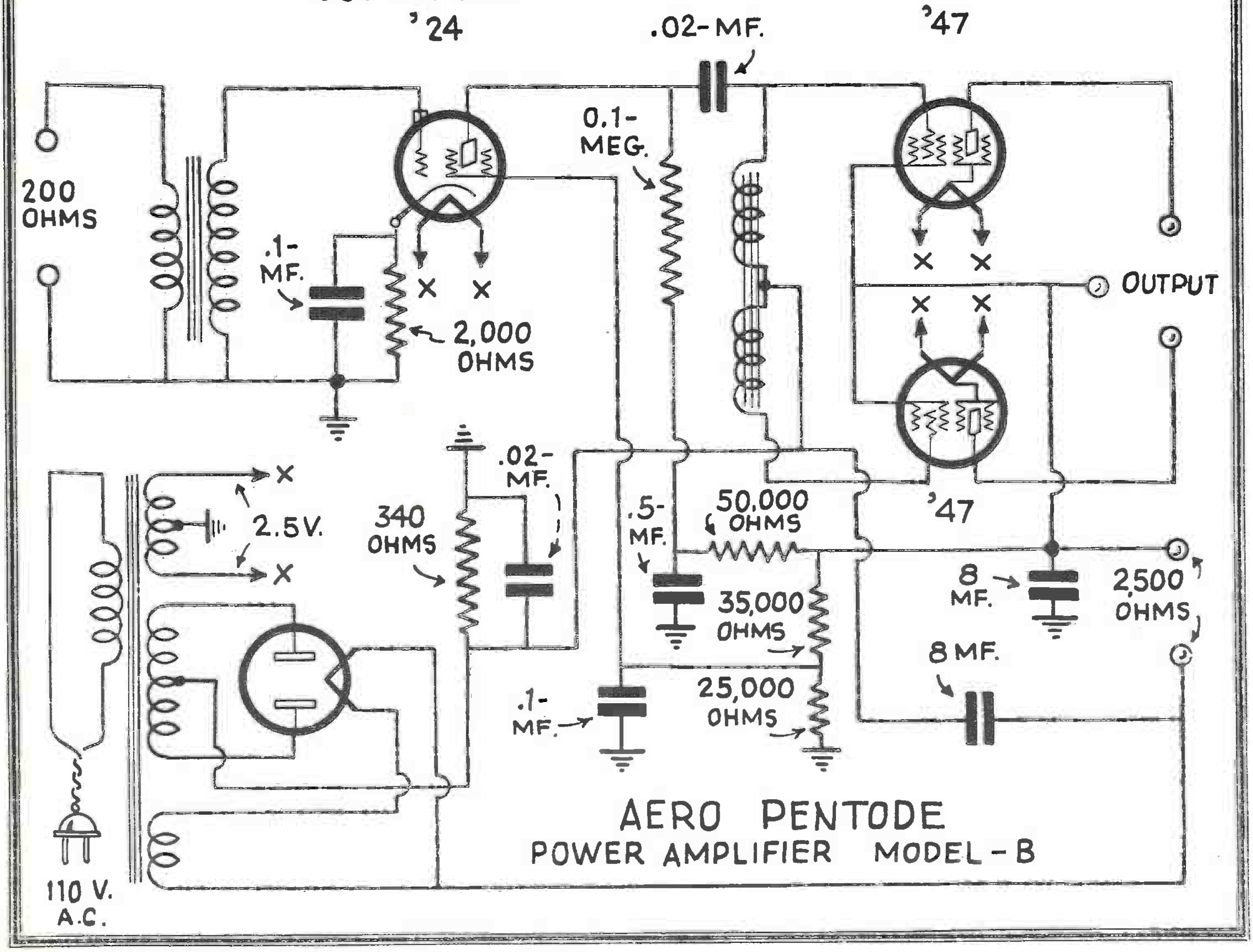

AERO PENTODE
POWER AMPLIFIER MODEL-B

CHAS. HOODWIN CO.

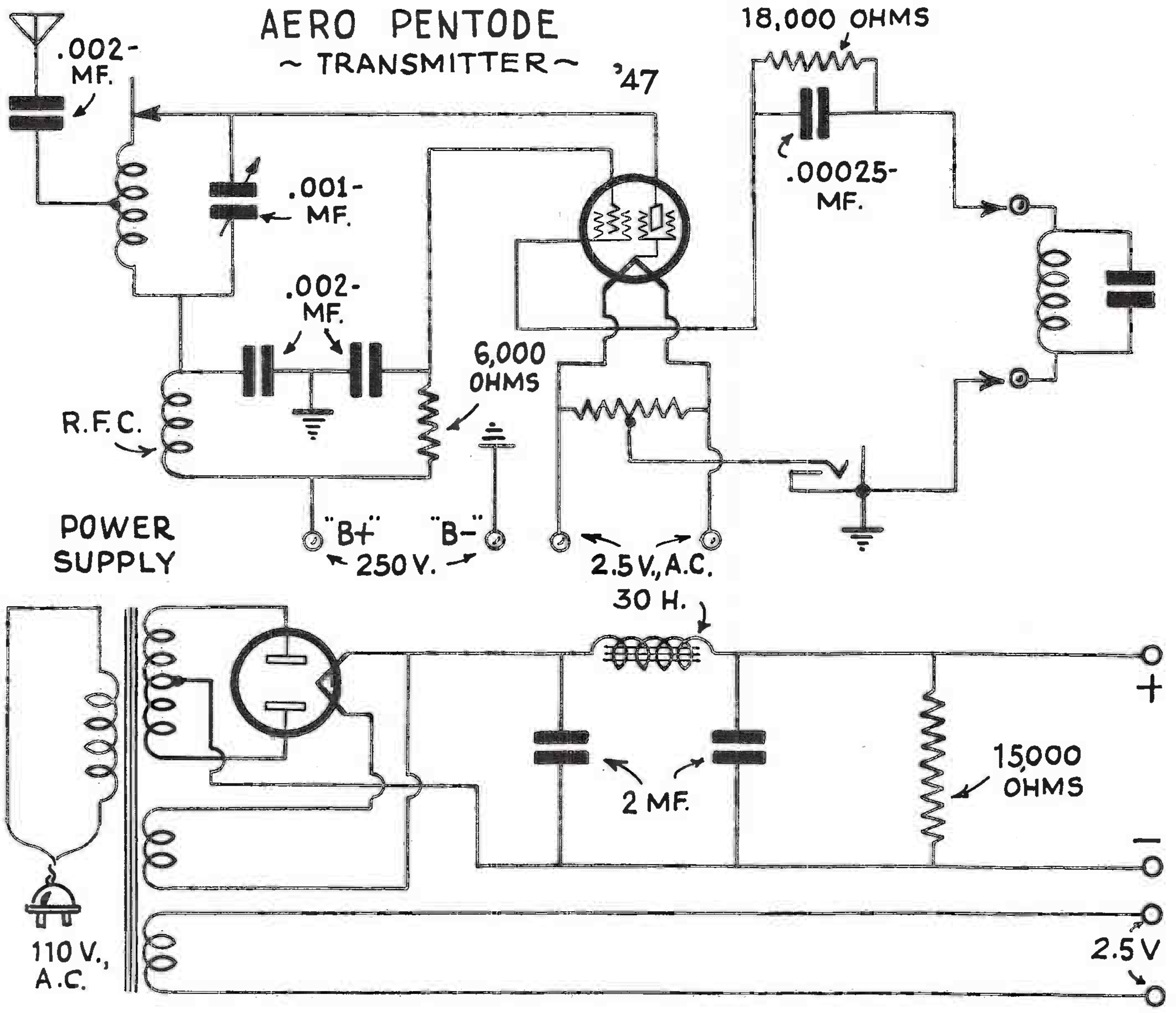

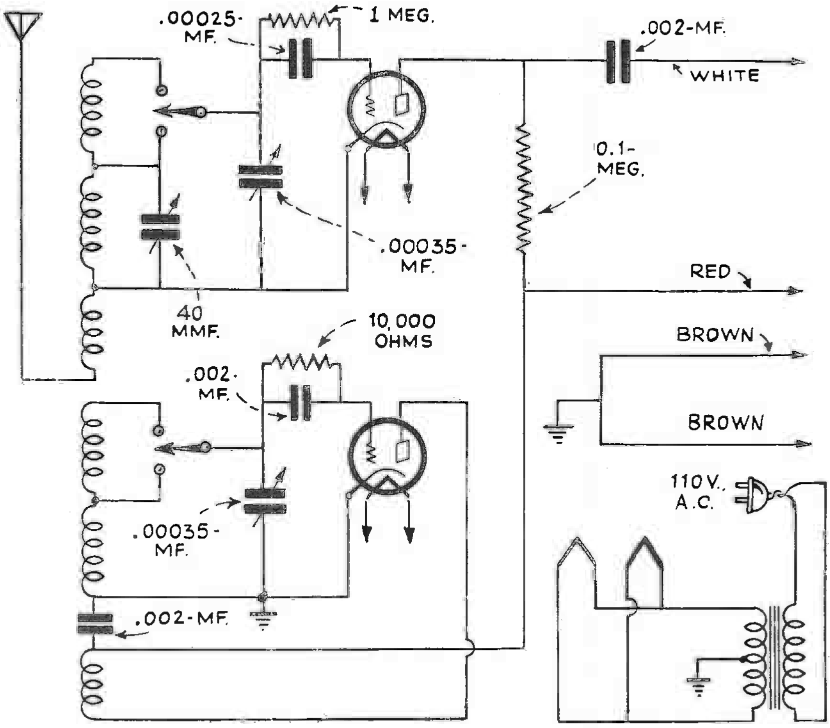

~ AERO 1932 CONVERTER ~

CHAS. HOODWIN CO

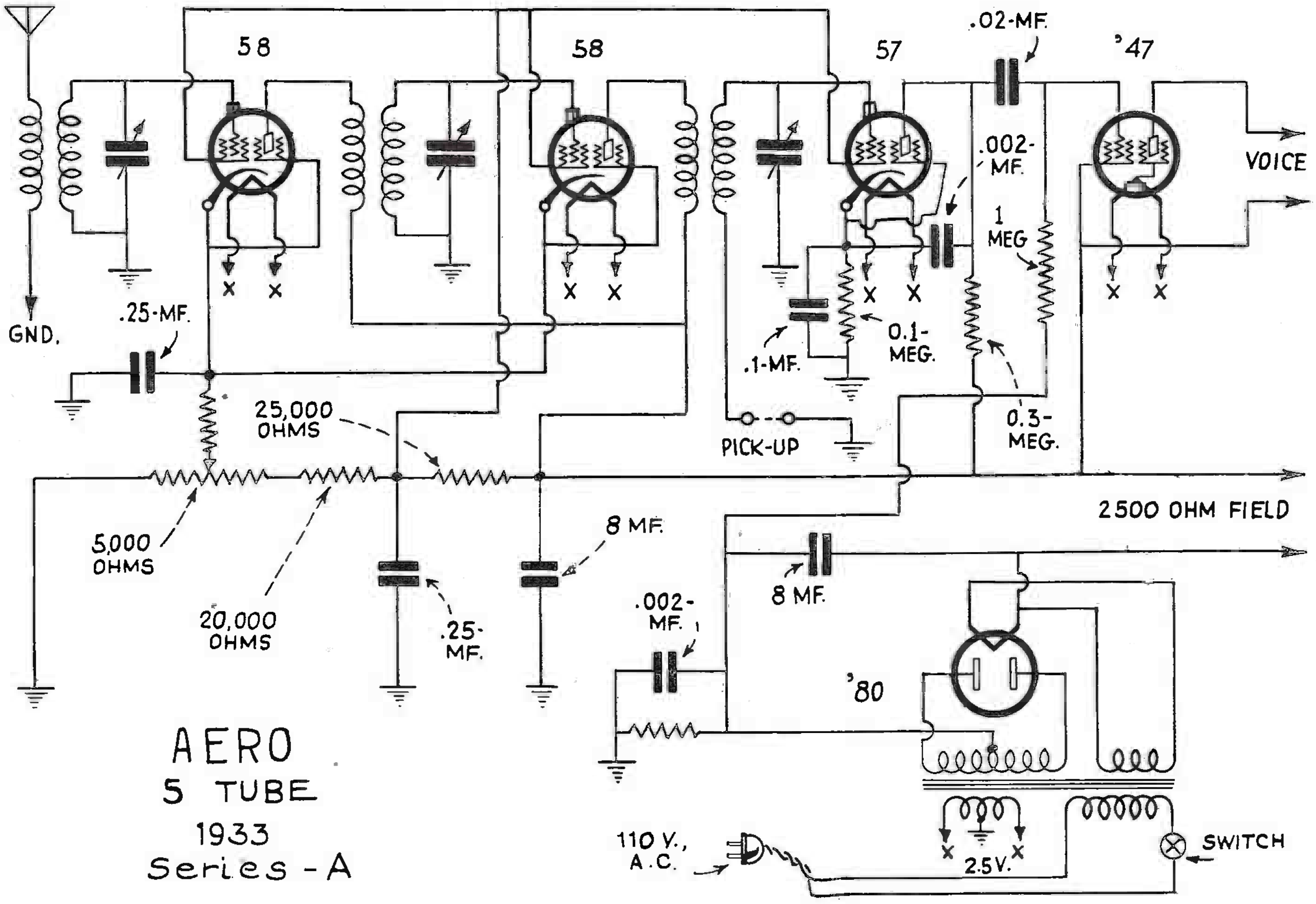

AERO
5 TUBE
1933
Series-A

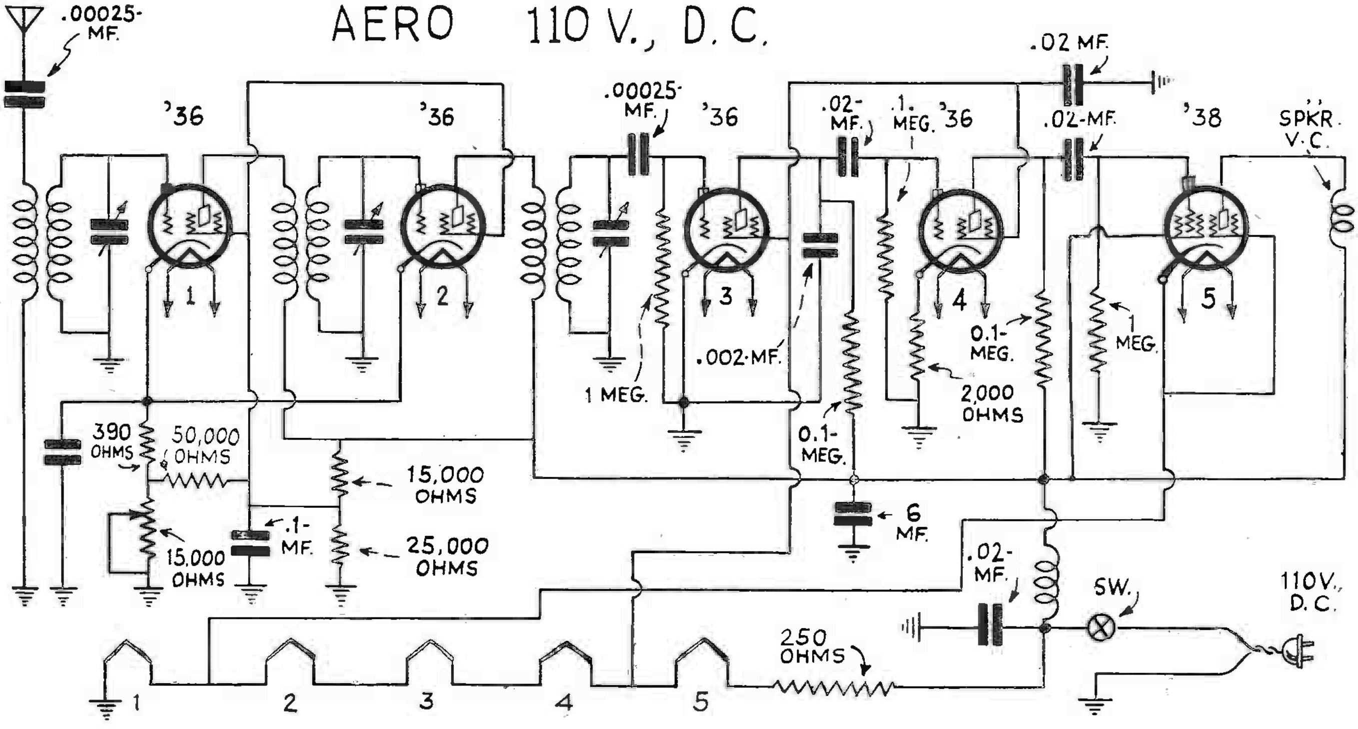

AERO 110 V., D.C.

CHAS. HOODWIN CO.

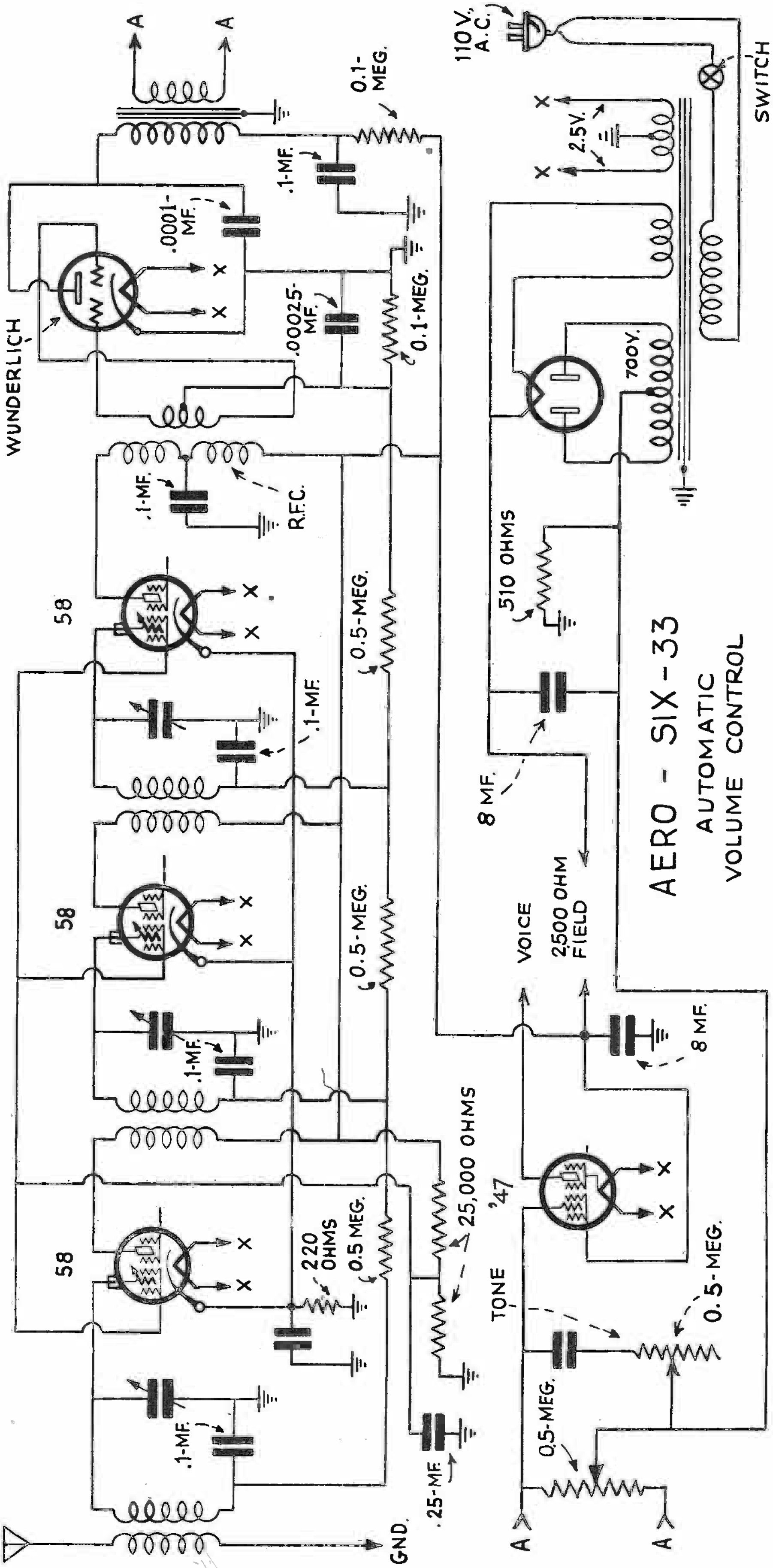

AERO - SIX - 33

AUTOMATIC VOLUME CONTROL

CHAS. HOODWIN CO.

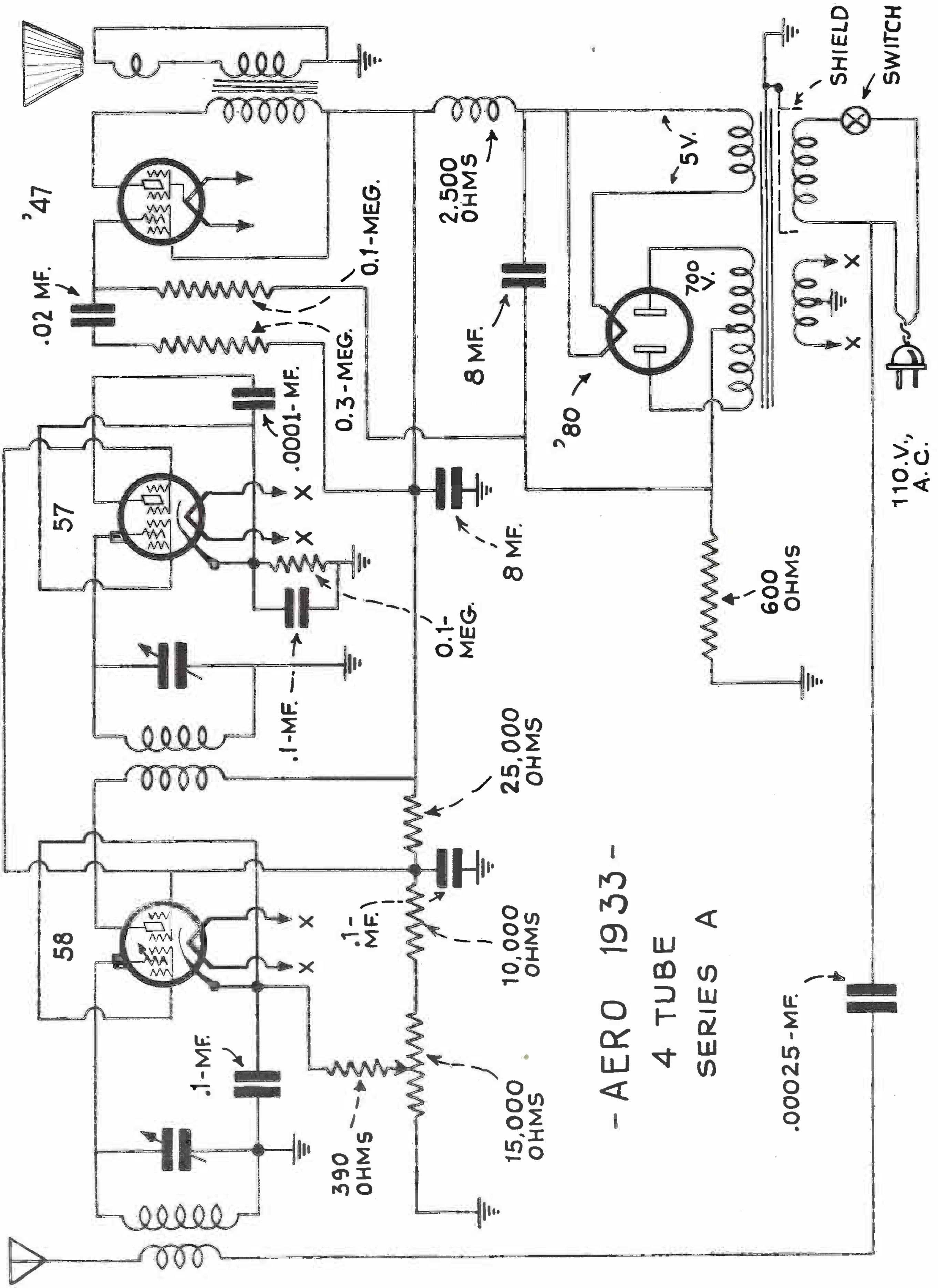

- AERO 1933 -
4 TUBE
SERIES A

JACKSON BELL, Ltd.

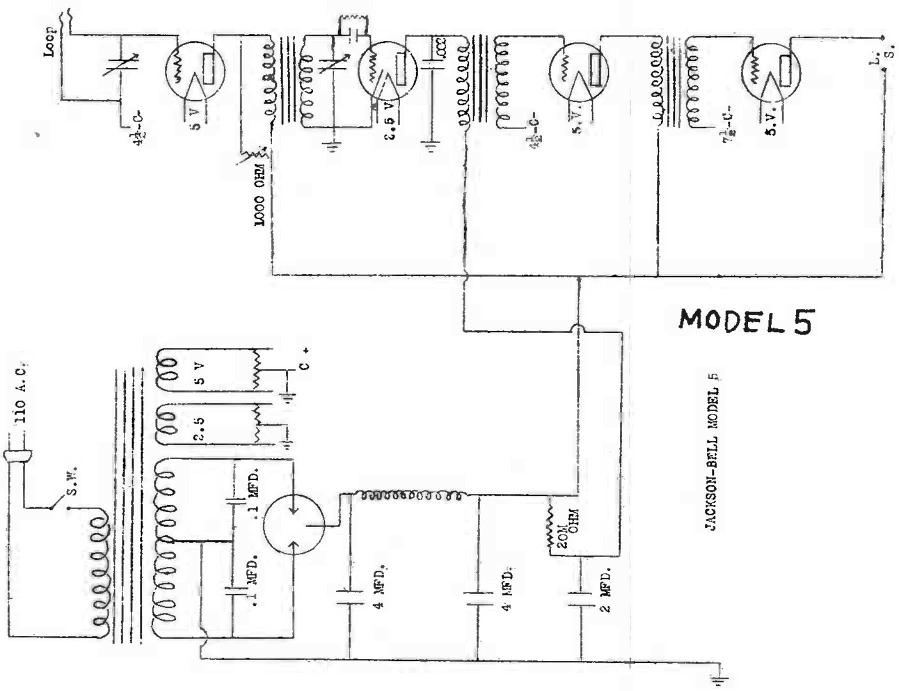

MODEL 5

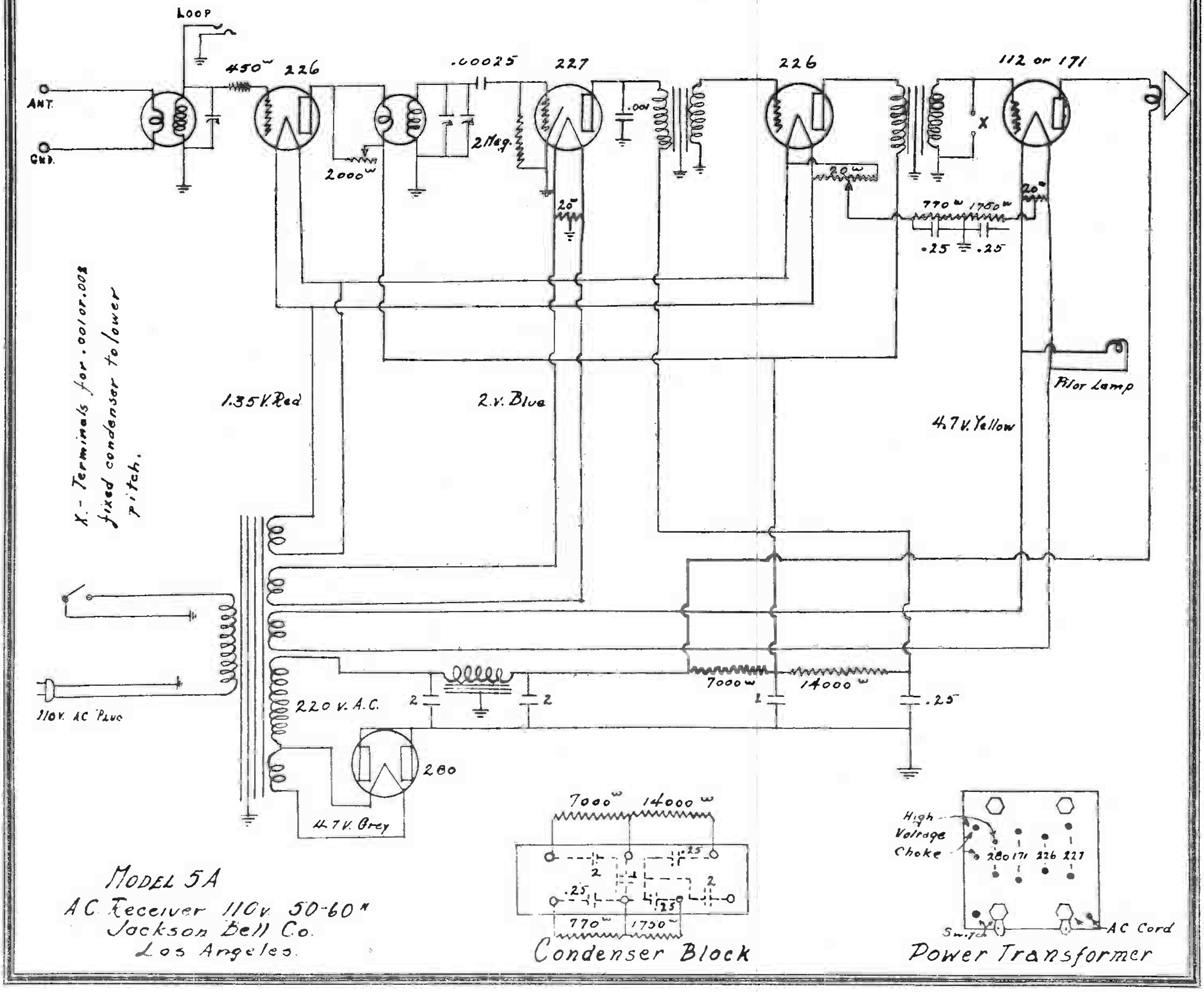

X.- Terminals for .001 or .002 fixed condenser to lower pitch.

Model 5A
AC Receiver 110v. 50-60~
Jackson Bell Co.
Los Angeles.

Condenser Block

Power Transformer

JACKSON BELL, Ltd.

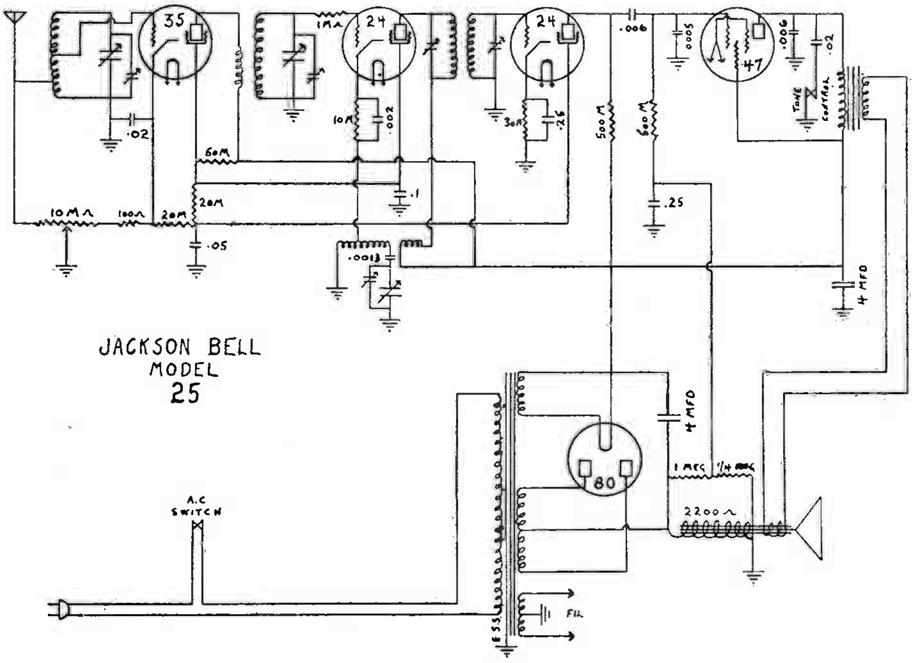

SERVICE NOTES

Jackson-Bell Model 25

CIRCUIT

The circuit of the 4-tube super-heterodyne employing one stage of T.R.F. autodyne oscillator detector, a second detector operating at 175 KC and the conventional resistance coupled audio fed into a 47 type out-put tube. Power supply is obtained from a full wave rectifier circuit.

OPERATION

To put set in operation, insert the proper tubes, as follows: Looking at rear of set forward and left, place a type 51 or 35 tube, rear left type 24, next in order to the right, type 47, type 80 and type 24. Insert AC plug in circuit and turn on the set by means of switch on volume control, (small knob on lower right side of set). The small knob on lower left side of set, turns the tone control off and on by means of a switch. The large knob in the center tunes the set from approximately 1700 to 500 KC.

TROUBLES

HUM

Hum may often be traced to defective tubes. After you have checked this and are sure all tubes are O.K. and in correct position, first check set for filter ground —then make sure bias on 247 tube is O.K. Check resistor in 47 grid circuit for open and short to chassis. Check coupling condenser as defective condenser will cause hum. Also, check 1 MFD and bias for open.

If trouble is not found in above tests, remove the 47 tube and if hum still exists, a faulty filter condenser will be found.

POOR QUALITY

Usually caused by ½ meg. resistor in grid of 47 tube grounded to chassis, bad coupling condenser or resistor reversed in drop across speaker field. Be sure .25 meg. resistor is in ground end of drop.

All resistors should be checked for accuracy. If tone is too deep with tone control off, check same making sure it opens up in off position. Poor quality may also be traced to defective autodyne 24 tube.

HOWL

Make sure set is not pushed too far forward in cabinet or resonate howl will occur. Loosen bolts in bottom of cabinet and slide chassis as far back in cabinet as shafts will permit. If this does not cure trouble, remove chassis and loose bolts holding variable, making sure rubber supports holding same are intact and variable is floating in same.

If set has been realigned, be sure plates in variable are not too close, as howl will result.

ALIGNMENT AND BALANCE

First

Make all adjustments with volume control at maximum. Before aligning set make sure all tubes are in correct position and primary on oscillator and R.F. coils are well down towards grid end of coil.

TO ALIGN 175 KC ALIGNMENT.

Put set in operation and set tuning condenser to full 100 degree position. Next, remove the screen grid cap from the autodyne oscillator and apply 175 modulated signal to this tube. (Looking at rear of set this tube is the fourth on the extreme right.) Next, remove license plate and adjust trimmers for maximum out-put.

Second. BROADCAST ALIGNMENT.

With external modulated signal generator set at approximately 1710 KC (Police frequency). The dial should be set at approximately 5 degrees past minimum. Adjust oscillator trimmer on variable and resonate the other 2 trimmers from maximum out-put at this position. Apply 855 KC modulated signal and align set at this point by bending plates of variable. Do not readjust trimmers. Repeat this operation at 600 KC.

Third.

With set at 600 KC readjust trimmers on I.F. transformers, for maximum output. If set oscillates when properly aligned, shift external ground lead from center section of variable to point where oscillation ceases.

JACKSON BELL, Ltd.

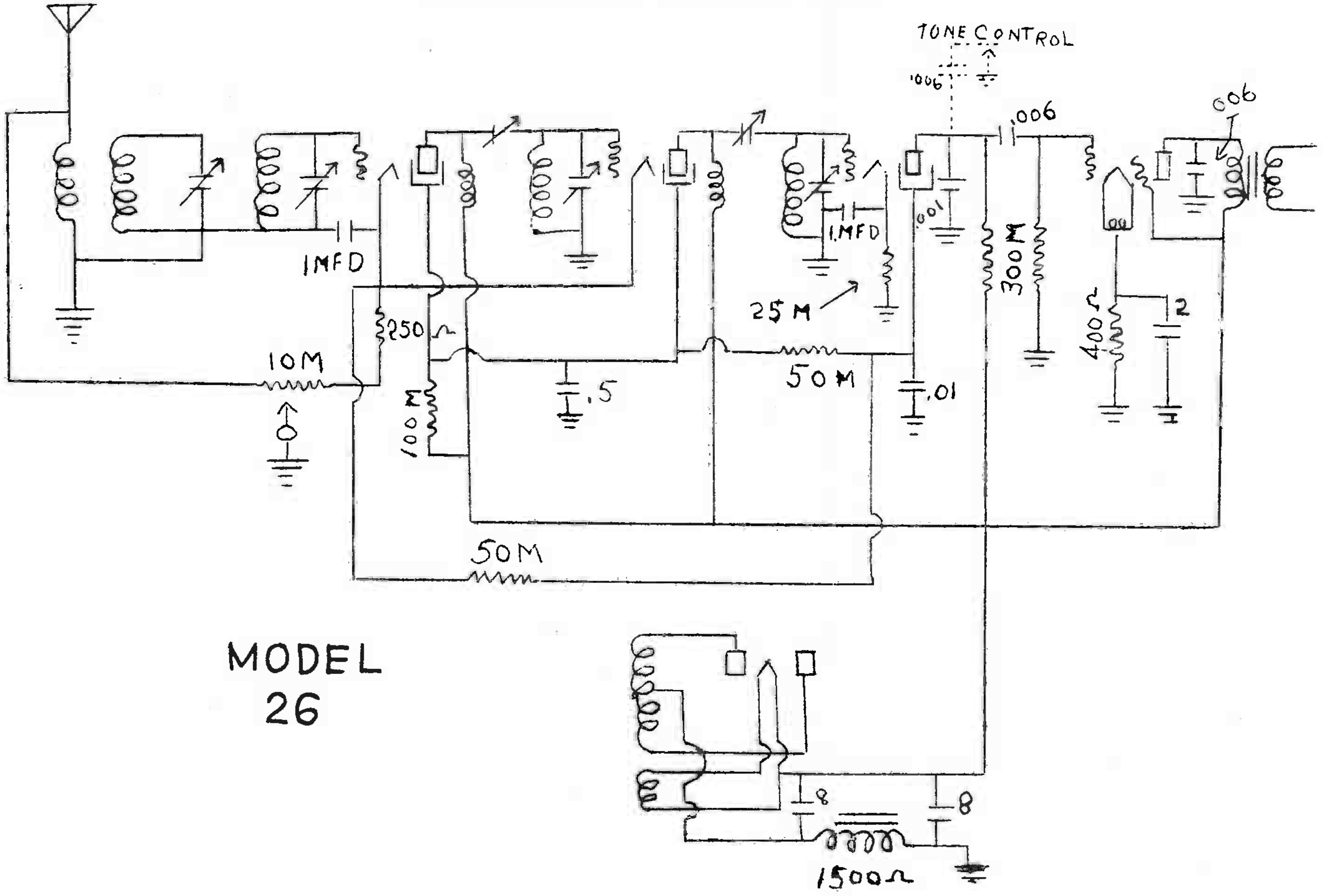

SERVICE NOTES

Jackson-Bell Model 26

CIRCUIT

This circuit consists of a six tube super-sensitive tuned radio frequency receiver empoying screen grid tubes with parallel pentode out-put. Covering the entire broadcast band from 200 to 600 Meters. Power supply is obtained by full-wave rectifier circuit.

OPERATION

"Broadcast." To place set in operation make sure all tubes are in proper place. Insert AC plug in socket and turn set on by means of switch in volume control. (In case that set is not tone control model the switch is separate). Small knob on lower right of set operates switch if it is a tone control model. Switch on lower right operates tone control. With volume control full on, or to extreme right, slowly rotate tuning knob, large knob in center, until desired station is obtained. Reduce volume to suit.

TROUBLES

HUM

Reverse AC plug in socket. Check all tubes and replace defective ones if any are found. Check set for filament ground. From filament to ground should read 250 ohms as bias is obtained by 250 ohm resistor from filament center tape to ground which is by-passed with a 2MFD condenser. Check this condenser for open or short also check resistor for correct value. Check resistor in detector plate circuit which is 300,000 ohm. Check coupling condenser from grid of pentode to detector which should be .006 MFD for open also for correct value as a variance in this capacity would cause hum. Check 300,000 ohm resistor from grids of pentodes to ground making sure that ground connection is O.K. Remove both pentode tubes and if hum still exists a faulty filter condenser will be found.

POOR QUALITY

Poor quality will usually be found due to defective tubes. If this does not remedy trouble check voltages on tube and check resistors for proper value and replace with proper parts. If tone is too deep or a rumble exists when set is on full volume, check condensers by-passing plate of pentode which should be .006 also condenser by-passing plate of detector should be .001. In case set is tone control model check by-pass condenser from plate of detector to tone control switch.

OSCILLATON

Make sure set is in perfect resonance, as in this set no circuit can be staggered. Check by-pass condensers on cathodes of detector and cathode of R.F. for open. Check condensers by-passing R.F. and detector screen grid. Isolate grid lead from condenser as well as possible.

ALIGNMENT AND BALANCE

Before aligning set make sure all tubes are in correct position and that grid lead to each tube is as short as possible.

With external signal generator or grid dip oscillator adjust trimmers on R.F. and detector coil (shielded coils.) The trimmers on these two should be tightened to maximum and loosened one full turn. With variable condenser at minimum, resonate these circuits for maximum out-put. (If set does not resonate without much variance in capacity of trimmer, remove shield cans and look for shorted turns in coil.) Reset variable at 5 degrees toward maximum and adjust trimmers on antenna and band pass coils, for maximum out-put. Set signal generator at 900 KC and resonate by bending plates on variable condenser. Repeat this operation at 655 KC and 550 KC. If set oscillates after balancing loosen gain screws and R.F. and detector coils 1¼ turns and repeat above operation. If set continues to oscillate, refer to OSCILLATON notation under TROUBLES.

JACKSON BELL, Ltd.

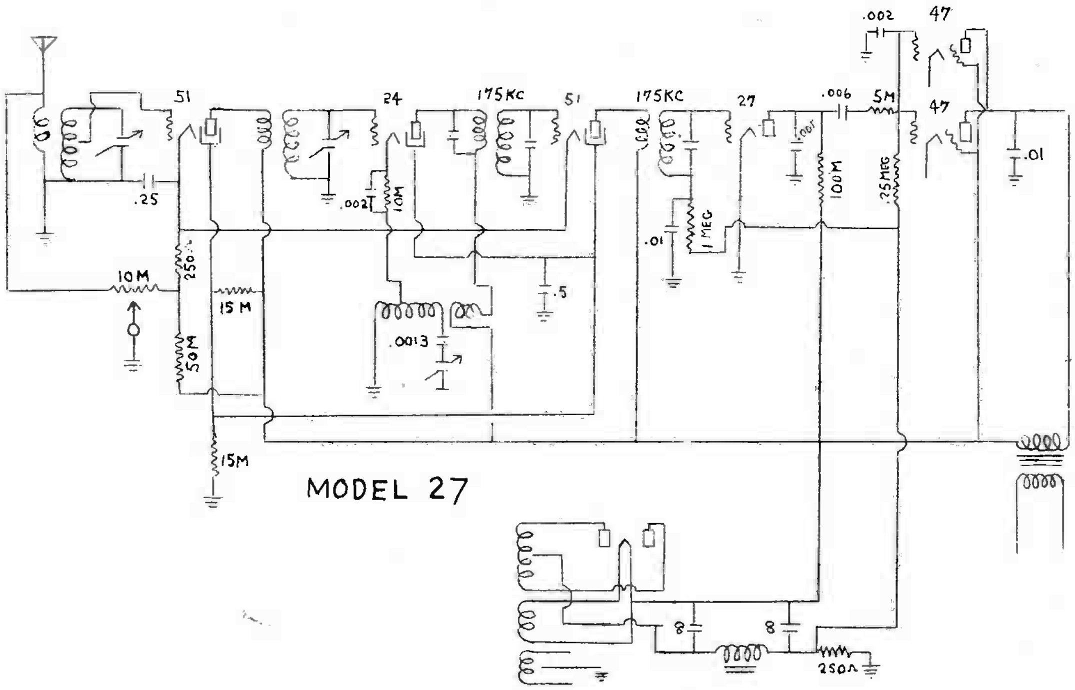

SERVICE NOTES

Jackson-Bell Model 27 Super-Heterodyne

CIRCUIT

This circuit consists of a 7-tube super-sensitive superheterodyne receiver employing screen grid and multimu tube with parallel pentode out-put, covering entire broadcast band. Power supply is obtained by full wave rectifier circuit.

OPERATION

"Broadcast." To place set in operation, make sure all tubes are in proper place. Insert AC plug in socket and turn set on by means of switch on volume control, (small knob on lower right side of set). With volume control full on, or to extreme right, slowly rotate tuning knob (large knob in center) until desired station is located. Reduce volume to suit, also tone is controlled by knob on lower left.

TROUBLE

HUM

Hum may be traced to defective tubes. After you have checked this and are sure all tubes are O.K. and in correct position, check for filament or filter ground. The bias of this set is obtained by a 250 OHM resistor in speaker return. If this bias is grounded tc chassis or open, a loud hum will be heard. Check 250,000 OHM resistor from grid on pentode to bias, for open or short, also, check grid return of second intermediate transformer for ground, as this return should go to bias resistor. A defective coupling condenser open, shorted, or incorrect size, will cause hum. The value of this condenser is .006 MFD. If trouble is not found in above test, remove 47 tube and if hum still exists, a faulty or leaking filter condenser will be found. Reversal of AC plug should be tried.

POOR QUALITY

Poor quality may also be due to defective tubes, or in case tubes are O.K. check the 250,000 OHM resistor in grid circuit of 47 tubes as this value is critical. Check plate resistor of detector or 27 tube, which should be 100,000 OHM. If tone is too deep, you will find a shorted or leaking .001 by-pass condenser in plate of detector. Also check .01 condenser from plate of 47's, to tone control. This will also cause a lack of base if condensers are open. Check tone control for short, open or ground.

HOWL

Make sure set is not pushed too far forward in cabinet or resonate howl will occur. Loosen bolts on bottom of cabinet and slide chassis as far back in cabinet as shaft will permit. If this does not cure trouble, remove chassis and make sure that shield is free-floating and rubber grommets. Also, loosen bolts supporting variable and dial to give a free movement on same on chassis.

If set has been realigned, be sure plates in variable are not too close, as a howl will result when volume is turned up.

ALIGNMENT AND BALANCE

Make all adjustments with volume control at maximum. Before aligning set, make sure all tubes are in correct position and primary on oscillator and RF coils are well down towards grid end of coil.

First. ALIGNMENT OF INTERMEDIATE-FREQUENCY TRANSFORMERS.

Put set in operation, short primary of oscillator coil out. Remove screen grid cap on fourth tube from right on looking at rear of set and apply to grid of this tube a 175 KC modulated signal. (If other frequencies are specified, apply same to this point). Adjust trimmers on I.F. transformers for maximum out-put.

Second. BROADCAST ALIGNMENT.

With intermediate aligned to their proper frequency, remove wire shorting primary of oscillating coil, placing grid cap back on tube. Set dial market at last division on minimum side of scale. With external signal generator, adjust trimmers at 1350 KC. Adjust oscillator trimmer first and resonate other two trimmers for maximum out-put. Set signal generator at 850 KC and bend plates of variable to bring set in resonance at this point. Repeat this operation at 700 KC and again at 575 KC.

If set oscillates, slide primary coil of oscillator towards ground end until oscillation ceases. If this does not cure the trouble, readjust intermediates with variable set at 600 KC. Also, check grid suppressor for open or short in grid lead of RF.

JACKSON BELL, Ltd.

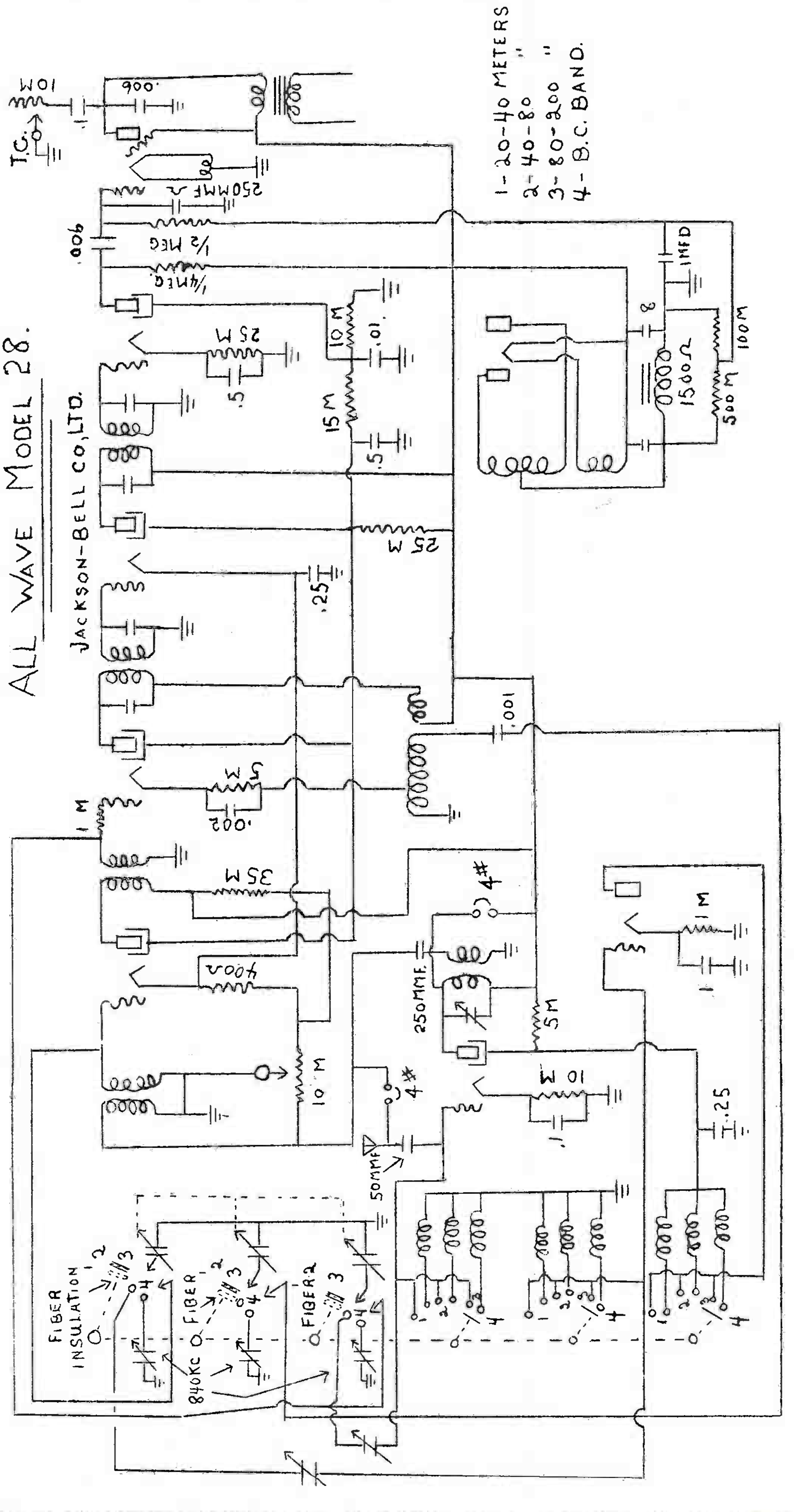

JACKSON BELL, Ltd.

SERVICE NOTES

Jackson-Bell All Wave Model 28

CIRCUIT

The circuit consists of a six tube super-sensitive superheterodyne, covering broadcast band 1550 KC to 500 KC and, converted by switching to a double super-heterodyne short wave set, covering from 19 Meters to 200 Meters, or in all, a coverage of 19 to 600 Meters. The power supply is obtained by a full wave rectifier circuit.

OPERATION

"Broadcast." To place set in operation, make sure all tubes are in proper place. Insert AC plug in socket and turn on set by means of switch on volume control, (small knob on lower left side of set). Turn switch (large knob on upper right of set) to right until light in window is at extreme right. The switch should snap into each position with a click. The set now being in broadcast position, and the volume control full on, slowly turn tuning condenser gang by means of large knob on upper right, until station is tuned in. Regulate volume to suit. Tone is regulated by knob on lower right.

"Short-wave." Snap switch one position to the left. You will be able to tell by the feel of the switch when it is in position. Also the light in the window will shift to the second graduated scale on dial.

We will call this Band No. 3 which covers 88 to 200 Meters. With volume on full, slowly rotate condenser gang until desired station is obtained.

Again snap switch to the left, to Band No. 2. This covers 41 to 88 Meters.

The third position to the left or Band No. 1 covers 19 to 41 Meters.

It is absolutely necessary that the switch be in its correct position as indicated by the click, and by the light in the dial window. In tuning Short-wave, dial should be turned slowly as the set is extremely sharp tuned. You will encounter beats caused by one oscillator beating against the other, but with a little practice you will be able to tune in stations with full clearness and volume.

If broadcast stations are heard faintly on some spots of Short-wave Band, it is caused by cross modulation or, in some cases it is a harmonic or beat of station. When set is tuned to short-wave station this will disappear.

This set has been tested on the following stations :

BAND No. 1

10-21 Meters

W2XAD —Schenectady, N. Y.
W8XK —Pittsburg, Pa.

25 Meters

W8XK —Pittsburg, Pa.
VE9JR —Winnipeg, Canada

30-32 Meters

W2XAF —Schenectady, N. Y.
VK3ME —Melbourne, Australia

BAND No. 2

49-52 Meters

W8XAL —Cincinnati, Ohio
W3XAL —Boundbrook, N. Y.

BAND No. 3

100 Meters
Airplane Phones
120-175 Meters
Police Calls

TROUBLES

HUM

Hum may often be traced to defective tubes. After you have checked this and are sure all tubes are O.K. and in correct position, first check set for filter ground, then make sure bias on 247 tube is O.K. Check resistor in 47 grid circuit for open and short to chassis. Check coupling condenser as defective condenser will cause much hum. Also check 1 MFD. and bias for open, making sure that all converters are sweated in.

If trouble is not found in above tests, remove the 47 tube and if hum still exists a faulty-filter condenser will be found. Reversal of AC plug should be tried.

POOR QUALITY

Usually caused by ½ meg. resistor in grid of 47 tube grounded to chassis, bad coupling condenser or resistor reversed in drop across speaker-field. Be sure 100M resistor is in ground end of drop.

In all the above cases there will be a noticeable increase in hum.

All resistors should be checked for accuracy.

If tone is too deep with tone control off; check same making sure it opens up in off position.

MOTORBOATING

This condition usually occurrs at high frequency end of broadcast band, with variable at minimum position. Change oscillator tube and trouble will in most cases disappear. If this does not remedy trouble, move primary on oscillator coil slightly toward grid end of coil.

At all times make sure lead from first section of variable to switch is as far towards front of set as possible to prevent intercoupling.

HOWL

Make sure set is not pushed too far forward in cabinet or resonate howl will occur. Loosen bolts in bottom of cabinet and slide chassis as far back in cabinet as shafts will permit. If this does not cure trouble, remove chassis and loose bolts holding variable, making sure rubber supports holding same are intact and variable is floating in same.

If set has been realigned be sure plates in variable are not too close as howl will result.

TROUBLE SHOOTING ON SHORT-WAVE

No noise or signals on short-wave bands.

Be sure 840 KC I.F. is operating by rebalancing as per section on "Aligning 840 KC I.F."

Check tubes. A slightly flat 27 tube may refuse to oscillate on short-wave.

Check continuity from short-wave 24 control grid to ground on all short-wave bands. Also 27 short-wave oscillator grid to ground on short-wave bands.

Check short-wave 24 plate and screen grid voltage. No plate voltage, indicates an open plate choke. If screen voltage is the same as plate voltage it is a clear indication that the 27 tube is not oscillating or drawing plate current.

The merit of the 27 tube as a short-wave oscillator may be checked by setting the dial and switch at 35 meters, reading the 24 screen voltage, and touching the grid winding of the short-wave oscillator with the fingers. The screen voltage should rise about 20 volts.

The D. C. resistance of the short-wave 24 tube 840 KC choke is 23 ohms. The pick up coil coupled to this choke has 3.5 ohms resistance. If pick up coil becomes

JACKSON BELL, Ltd.

open or shorted, either case will kill all short-wave signals.

A careful inspection of the switch connections in the accompanying diagram will show many continuity checks which can be made on the selector switch contacts.

ALIGNMENT AND BALANCE

Make all adjustments with volume control at maximum

First. TO ALIGN 175 KC I.F. STAGE.

Set switch in broadcast position and short out middle, or oscillator section of variable condenser. Apply 175 KC modulated signal to front section of variable condenser or grid cap. Chassis must be grounded to 175 KC oscillator. Remove 27 and 24 short-wave tube beside I.F. transformer and adjust all I.F. trimmers to maximum output. This should be checked by an output meter.

Second. TO ALIGN BROADCAST BAND.

Close variable condenser and set dial at last division marker past 550 KC. Open variable condenser to 1350 KC and with 1350 KC modulated oscillator signal. Adjust middle or oscillator section trimmer of variable condenser to maximum response. R.F. and antenna section of trimmers are adjusted likewise at this frequency. Signal generator at 850 KC. Set dial at 850 KC and resonate by bending of slit plates on variable condenser. Repeat above at 650 KC and 550 KC.

Third. TO ALIGN 840 KC SHORT-WAVE I.F.

Place the type 24 and 27 short-wave tubes back in the chassis, and after they have warmed up, turn wave selector, short-wave, to any one of the short-wave positions. Connect output of 840 KC modulated signal generator to grid cap of short-wave 24 tube. Note:—When short-wave is in short-wave position the variable condenser no longer tunes the broadcast coils. These are tuned to 840 KC by means of large trimmer condensers, adjusted from top of chassis beside variable condenser. Each 840 KC trimmer is beside the section of the variable condenser which it substitutes for. Note:—In location where a broadcast station is on or too close to 840 KC, adjust above or below if interference is encountered.

Fourth. TO ALIGN SHORT-WAVE OSCILLATOR AND MODULATOR.

Note:—In the short-wave bands the front and rear of the variable tuning condenser, are connected in series with semi-variable padding condensers. These reduce the effective tuning cap of the tuning condenser to the low value necessary for tuning the short-wave coils.

In the absence of the short-wave signal generator, the broadcast signal generator may be set to 1000 KC. This will give harmonics on short-wave at 150 Meters, 100, 75, 60, 50, 42.8, 37.5, 33.3 and 30 meters. The best harmonic to use is the 75 meter one as it is just below the amateur 85 meters phone band.

Lift front of chassis up until set lays on its back. Three trimmer condensers will be seen in upper left hand corner of chassis. These are reading from top to bottom. The short-wave oscillator padder (in series with front section of tuning condenser). The short wave modulator padder (in series with the rear section of tuning condenser), and last the trimmer tuning the modulator plate choke to 840 KC.

With the wave selector short-wave in 40 to 80 meters position and signal generator at 1000 KC. Adjust the top or short-wave oscillator padding condenser until the harmonics appear in their proper places at 75, 60 and 50 meters. Note:—Disregard weaker intermediate harmonics. Then adjust the short-wave modulator padder for maximum response. Note:—The tuning condenser must be swung back and forth across the signal when this is being done as it effects the oscillator tuning. The tuned choke trimmer is then peaked on any signal.

The harmonics in the 20-40 meter band will be only approximately correct because of extremely high frequencies involved. However, they will be within one meter correct on this band.

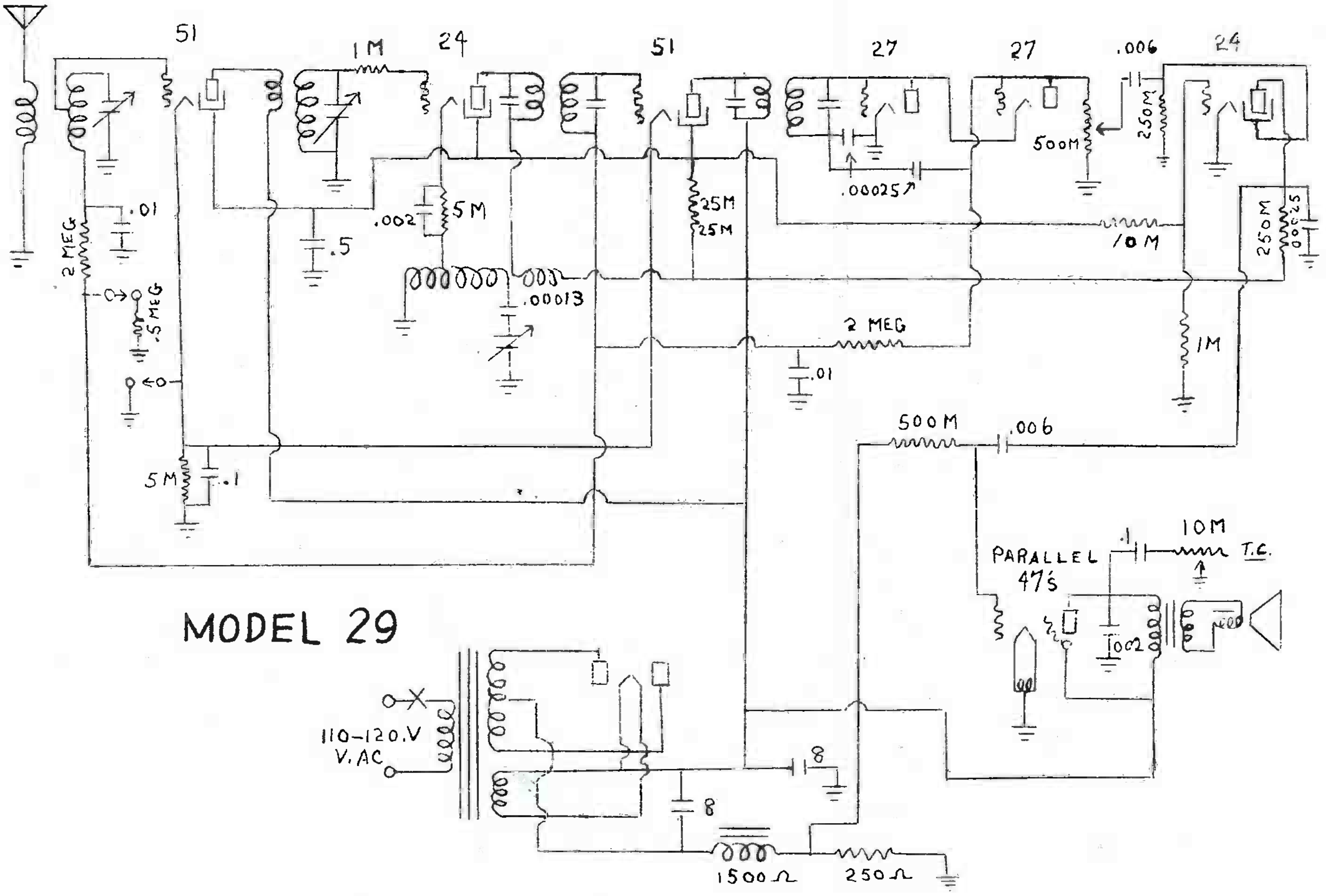

MODEL 29

JACKSON BELL, Ltd.

SERVICE NOTES

Jackson-Bell Model 29 Super-Heterodyne

CIRCUIT

This circuit consists of a 9-tube super-sensitive superheterodyne receiver employing screen grid and multimu tube with parallel pentode out-put, with full automatic volume control. The power supply is obtained by the full wave rectifier circuit. This set covers the entire broadcast band from 550 KC to 1500 KC.

OPERATION

To place set in operation make sure all tubes are in their proper position. Insert AC plug in socket and turn set on by means of switch on volume control (small knob on lower left). With lower knob in center which controls switch, which has three positions, first (center position) is local position, second (one position to left) full automatic control, third (one position to right of center) full distance position. Place this switch in second position and with volume full on or to extreme right, select desired station by slowly rotating tuning gang (large knob in upper center). Reduce volume to suit and control tone by means of small knob on lower right.

TROUBLES

HUM

Hum may be traced to defective tubes. After you have checked this and are sure that all tubes are O.K. and in their correct positions, check for filament or filter ground. The bias of this set is obtained by a 250 ohm resistor in speaker return. If this bias is grounded to chassis a loud hum will result, coupled with distortion in signal. Check 500,000 ohm resistor from grid of pentode to bias, for open, short. Check 250,000 ohm resistor in plate circuit of first audio or 24 tube first tube on extreme left in front of I.F. transformer can. This value is extremely critical. From screen grid of this tube to ground should be a 250,000 ohm resistor which is also very critical. A defective coupling condenser open, shorted or incorrect size, will cause hum. The value of this condenser is .006 MFD. The control grid of the above tube (first audio) is supplied by voltage from tap of 1000 ohm resistor to ground to 10,000 ohm resistor from screen voltage. This position should not be grounded as excessive hum and distortion will take place. If trouble is not found in the above test remove 47 tube and if hum still exists a faulty or leaking filter condenser wil be found. Reversal of AC plug should be tried.

VOLUME CONTROL

Volume control is of 500,000 ohm value and it is necessary that the shaft be insulated from the chassis for if same is grounded set will not work. Connections on this volume control are as follows:—One side is grounded to chassis, other side is connected to grid and cathode of volume control tube, (second tube on left side of chassis in front of I.F. can). The center section or arm connection is connected to a .006 condenser to screen grid of first audio. It is extremely important that the following be checked carefully as this incorporates the connections for the automatic volume control unit of this set. From grid and cathode of volume control tube to a point which we will refer to hereafter as .C, is connected a 2 meg. ohm resistor. Also from grid and cathode connection to grid return of second intermediate is connected a .00025 condenser and from grid return to ground another .00025 condenser. From .C to ground is by-passed by a .01 condenser. The grid return of antenna coil is connected to .C thru a 2 meg. ohm resistor. Grid return by-passed to ground by .01 condenser. It is extremely necessary that none of these positions are grounded and that all condensers and resistors used are of correct value.

POSITION SELECTOR SWITCH

As described before this switch has three positions, which we will call first or local positions, second, full automatic volume control, third distance switch. Check continuity of this switch as follows: In position one it allows a 5000 ohm bias resistor in cathodes of RF tubes. In position number two this bias is grounded. In third or distance position a 500,000 ohm resistor to .C is grounded. Make sure that switch is in proper working condition and that ground post is making contact.

Poor quality may also be due to defective tubes or

POOR QUALITY

in case all tubes are O.K. check the ½ meg. ohm resistor in the grid circuit of the 47 tubes, as this value is extremely critical. Check coupling condenser for open, short or leakage. If tone is too deep you will find the bypass condenser on plate of 47 tube will be incorrect. This value should be .002. Check by-pass condenser on plate of first audio tube to ground, which value is .00025. If tone is too deep you will find a .002 in PZ plates to ground either short or leaky. Check .1 condenser from plate of 47 tubes to tone control. This will also cause a lack of bass if condensers are open. Check tone control for short, open or ground.

HOWL

Make sure set is not pushed too far forward in cabinet or resonant howl will occur. Loosen bolts in bottom of cabinet, slide chassis as far back as shaft will permit. If this does not cure trouble, remove chassis and loosen bolts holding variable making sure same is free floating. Make sure shield is not making contact with variable as shield is insulated from variable by rubber grommet. If set has been realigned be sure plates in variable are not too close as a howl will result when volume is turned up.

ALIGNMENT AND BALANCE

Make all adjustments with volume control at maximum. Before aligning set, be sure all tubes are in their correct position, primary on oscillator and R.F. coil are well down towards grid end of coil.

First. ALIGNMENT OF INTERMEDIATE FREQUENCY TRANSFORMER

Put set in operation, short primary of oscillator coil out. Remove screen grid cap on fourth tube from the right looking at rear of set. Apply at this point 175KC modulated signal. (If other frequencies are desired apply same to this point). Adjust trimmers on I.F. transformers for maximum out-put. Adjust trimmers on second I.F. transformer first.

Second. BROADCAST ALIGNMENT

With intermediate aligned to their proper frequency remove wire shorting primary of oscillator coil, placing grid cap back on oscillator tube. Set dial marker at last division on minimum side of scale. With external signal generator adjust trimmers at 1350 KC. Adjust oscillator trimmer first and resonate other two trimmers for maximum out-put. Set signal generator at 850 KC and bond plates of variable to bring set in resonance at this point. Repeat this operation at 700 KC and again at 575 KC.

If set oscillates check all connections, slide primary coil to oscillator towards ground and until oscillation ceases. If this does not cure the trouble, readjust intermediate trimmers with variable set at 600 KC. Also check grid suppressor for open or short in grid load of R.F. All above adjustments in using a signal generator with meter in out-put should be made with selector switch on distance, or number three position.

In case signal generator is not used place out-put meter from .C as heretofore described to ground and balance set on incoming signals for maximum out-put.

JACKSON BELL, Ltd.

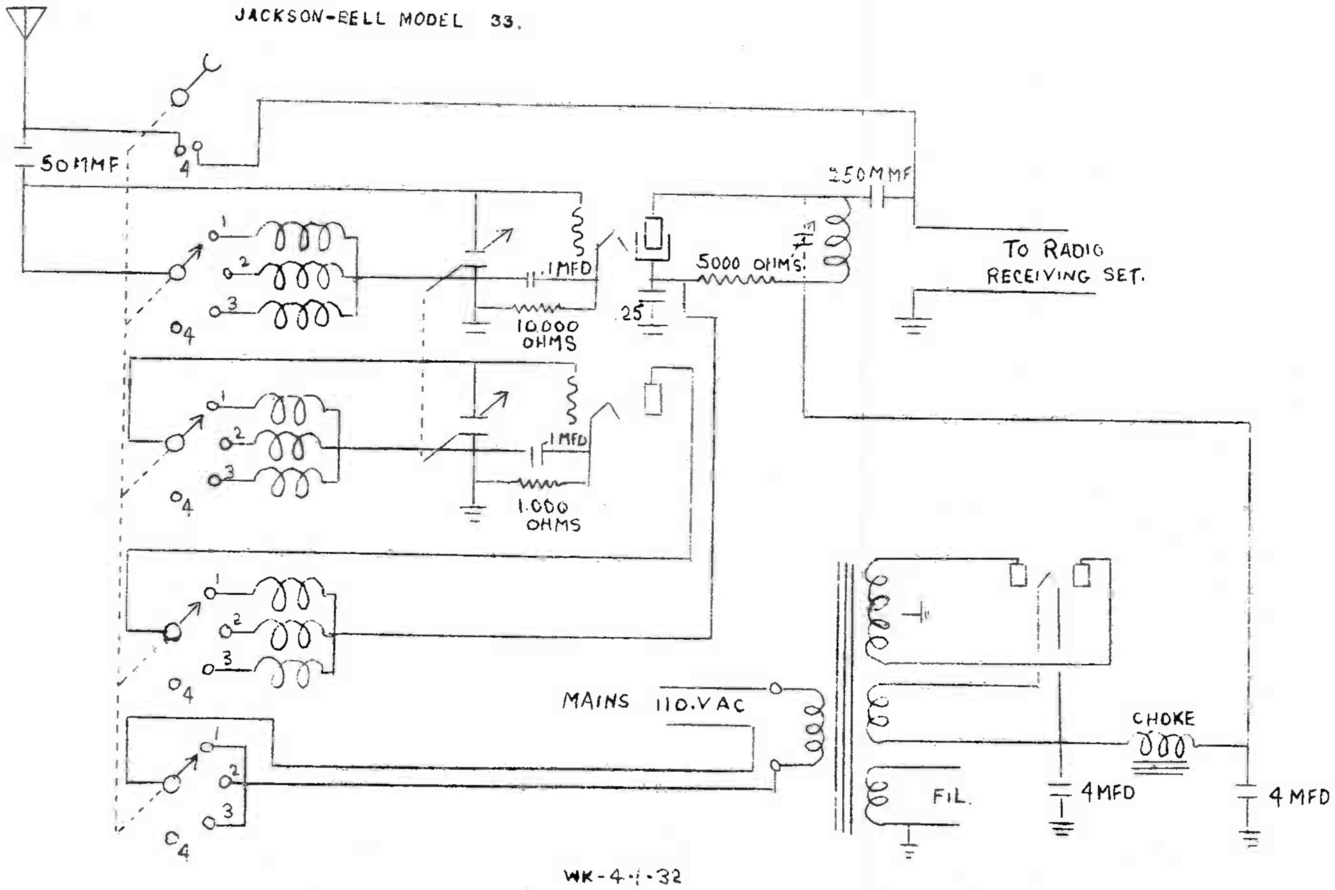

SERVICE NOTES

Model 33 Short-Wave Converter

This set is a super-heterodyne short-wave converter to be used in connection with your own Radio set. By its use you convert your regular broadcast receiver into a powerful super-heterodyne short-wave set. This set in conjunction with your own radio will give you a coverage from 19 meters to 200 meters. The power supply is separate and is obtained by a full-wave circuit.

OPERATION

To connect the short-wave converter to your radio set:

First.

Remove the antenna and ground from your radio, and connect them to the aerial and ground post respectively of the short-wave converter.

Second.

Connect the cable leading from the short-wave converter to eads, the one with the red tractor, to antenna post and the other one to the ground post of your radio.

Third.

Set dial of your radio receiver at 840 KC, or if your dial is not marked in kilocycles, set at approximately middle of scale. In case that in your location a local station will not permit you to operate set on 840 KC select a position that is clear of stations as near to this point as possible.

Fourth.

The volume is controlled by the regular volume control on your broadcast receiver.

Fifth.

The left hand knob on the converter operates the channel selector. With the knob turned to the extreme right, the converter is turned off and antenna and ground is connected direct to the broadcast receiver. In this position the receiver may be operated in its usual way.

As the switch is turned to the left, the right hand scale of the tuning dial will be illuminated showing the numbers from 200 to 300. Turning the knob again to the left the illumination will shift to the center scale showing numbers from 100 to 200. The next shift to the left will illuminate the third and last scale reading from 0 to 100. The wave length coverage of these scales are as follows:—0 to 100 is 19 to 40 meters, 100 to 200 is 40 to 85 meters and 200 to 300 is 78 to 185 meters.

Note:—It is necessary to obtain the best results from the convertor, that your set be in perfect working condition and the tubes should all be in first class condition together with the entire set. If broadcast stations are heard faintly in some spots on short-wave bands it is caused by cross modulation or in some cases it is the harmonic or boat of station. When set is tuned to short-wave station this will disappaer.

This set has been tested on the following stations:—

BAND No. 1

10-21 Meters

W2XAD —Schenectady, N. Y.
W8XK —Pittsburg, Pa.

25 Meters

W8XK —Pittsburg, Pa.
VE9JR —Winnipeg, Canada

30-32 Meters

VK2MC —Melbourne, Australia
W2XAF —Schenectady, N. Y.
VK3ME —Melbourne, Australia

BAND No. 2

49-52 Meters

W8XAL —Cincinnati, Ohio

JACKSON BELL, Ltd.

W3XAL —Boundbrook, N. Y.
W2XE —Long Island, N. Y.
FC310 —Saigon-Indo, China

BAND No. 3

100 Meters
Airplane Phones

120-175 Meters
Police Calls

TROUBLES

Be sure broadcast receiver is set to 840 KC or thereabouts.

Check tubes. A slightly flat 27 tube may refuse tto oscillate on short wave.

Check continuity from short-wave 24 controlled grid to ground on all short wave bands. Also 27 short-wave oscillator grid to ground on all bands.

Check 24 plate screen voltage. No plate voltage indicates an open plate choke. If the screen voltage is the same as plate voltage it indicates a 27 tube is not oscillating or drawing plate current.

To check the 27 oscillator tube set dial at approximately 35 meter reading the 24 screen voltage and touching the grid winding of the oscillator with the finger. The screen voltage should rise approximately 20 volts.

Check coupling condenser from plate to antenna lead to broadcast set.

Check all connections on wave switch selector by continuity.

ALIGNMENT

In aligning short-wave converter the coils are designed at practically no plate bending is necessary.

Place set in operating position and with scale on dial at first position (200 to 300) set external oscillator at 1710 KC and adjust oscillator trimmer on variable (oscillator trimmer is the second section from front of set), to correspond with this setting on dial. Next adjust front trimmer to resonant to maximum out-put.

You will find that setting short-wave at this point will make the dial line up on all scales.

In tuning short-wave converter be sure and turn tuning control slowly as stations are extremely sharp.

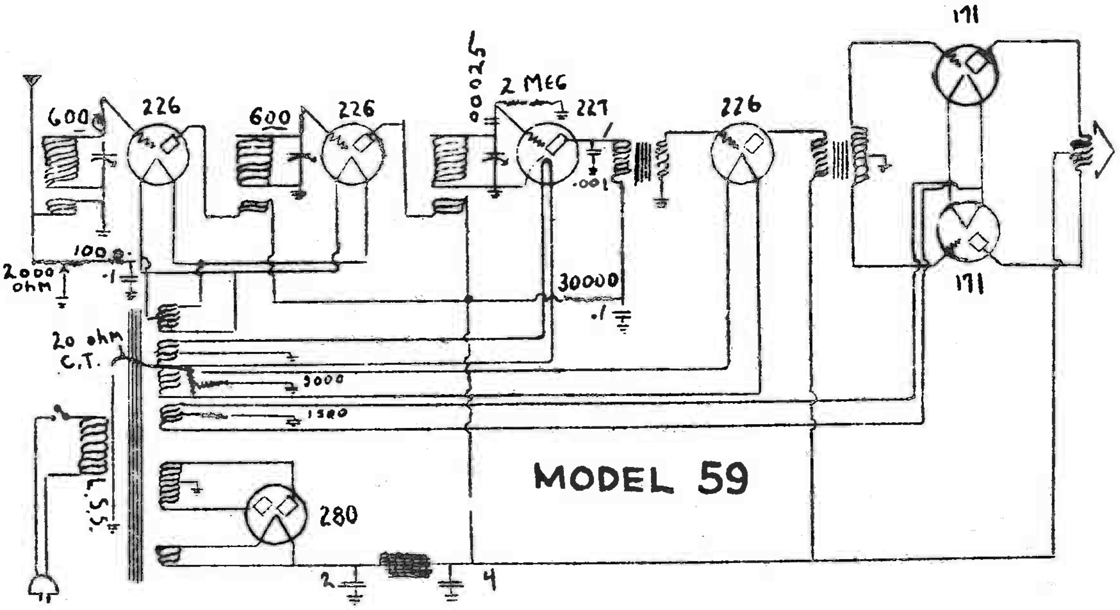

MODEL 59—JACKSON-BELL RECEIVER

This is a tuned radio frequency circuit, using 26 tubes as radio frequency amplifiers, grid leak detector, using a 27 tube; two stages of audio, transformer coupled; 26 in first stage and two 71's in push-pull in the last stage and a full wave rectifier. Volume is controlled by variable R.F. bias and antenna shunt.

R.F. Filament	1.3	Volts
R.F. Plate	200	"
R.F. Bias	19	"
Detector Plate	60	"
Detector Filament	2	"
First Audio Plate	200	"
First Audio Bias	15	"
First Audio Filament	1½	"
Push-Pull Plate	175	"
Push-Pull Bias	45	"
Push-Pull Filament	4.3	"

All measurements taken with volume control at maximum.

JACKSON BELL, Ltd.

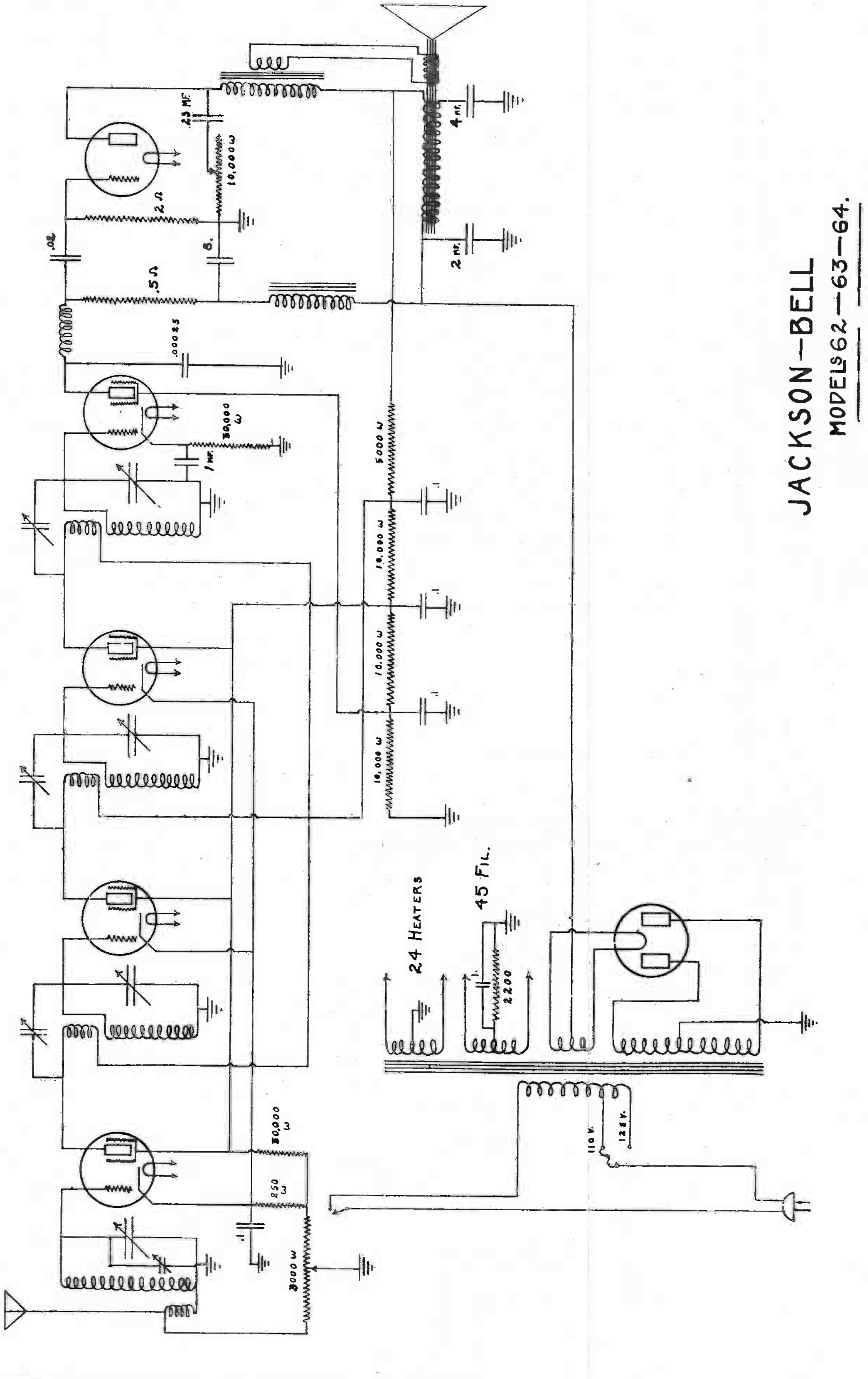

JACKSON BELL, Ltd.

SUPER-HETERODYNE

MODEL 86

6-29-31 W.P.K.

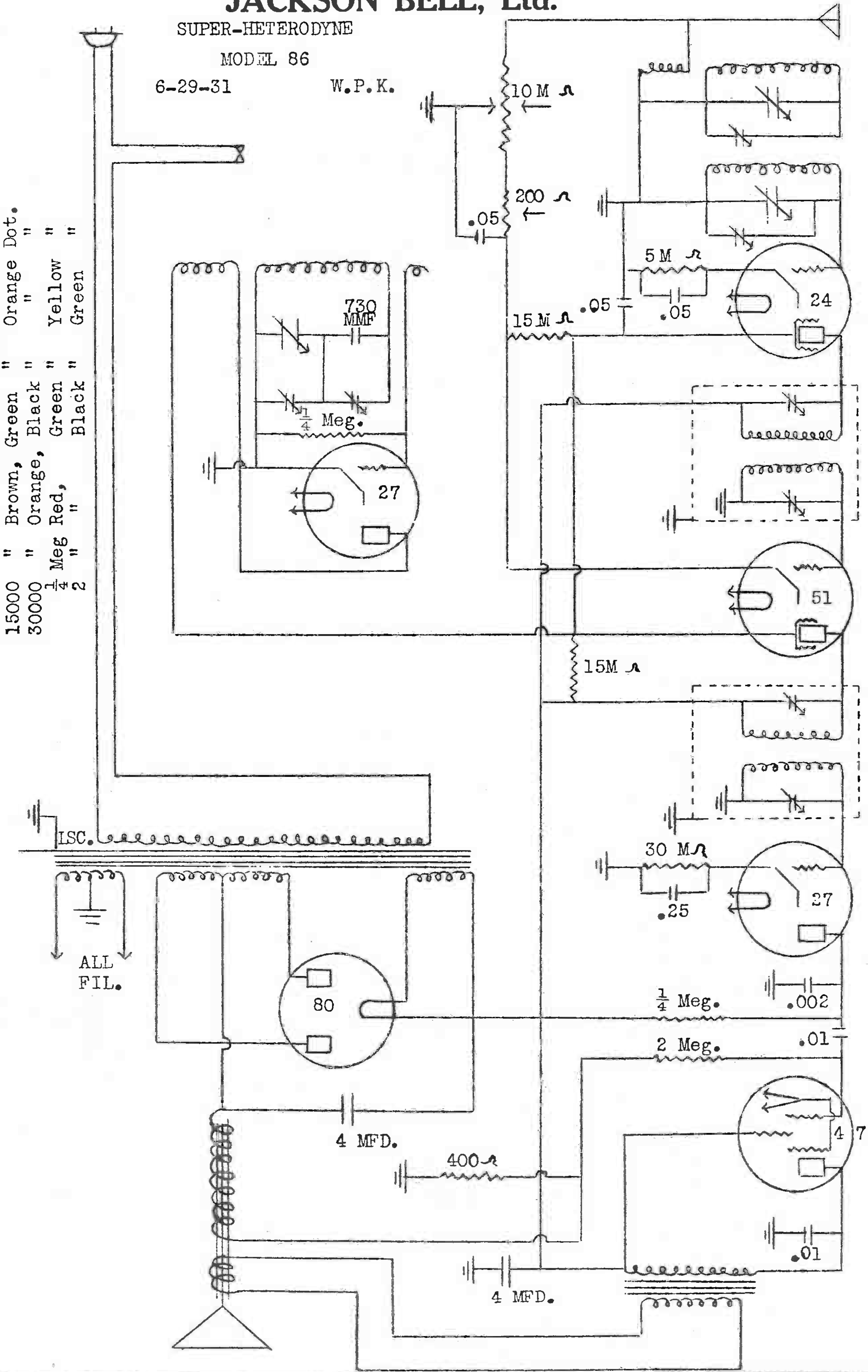

RESISTOR COLOR CODE

200 Ohm Wire Wound
400 " " " 3 watt
5000 " Green, Black end, Red Dot.
15000 " Brown, Green " Orange Dot.
30000 " Orange, Black " " "
¼ Meg Red, Green " Yellow "
2 " " Black " Green "

JACKSON BELL, Ltd.

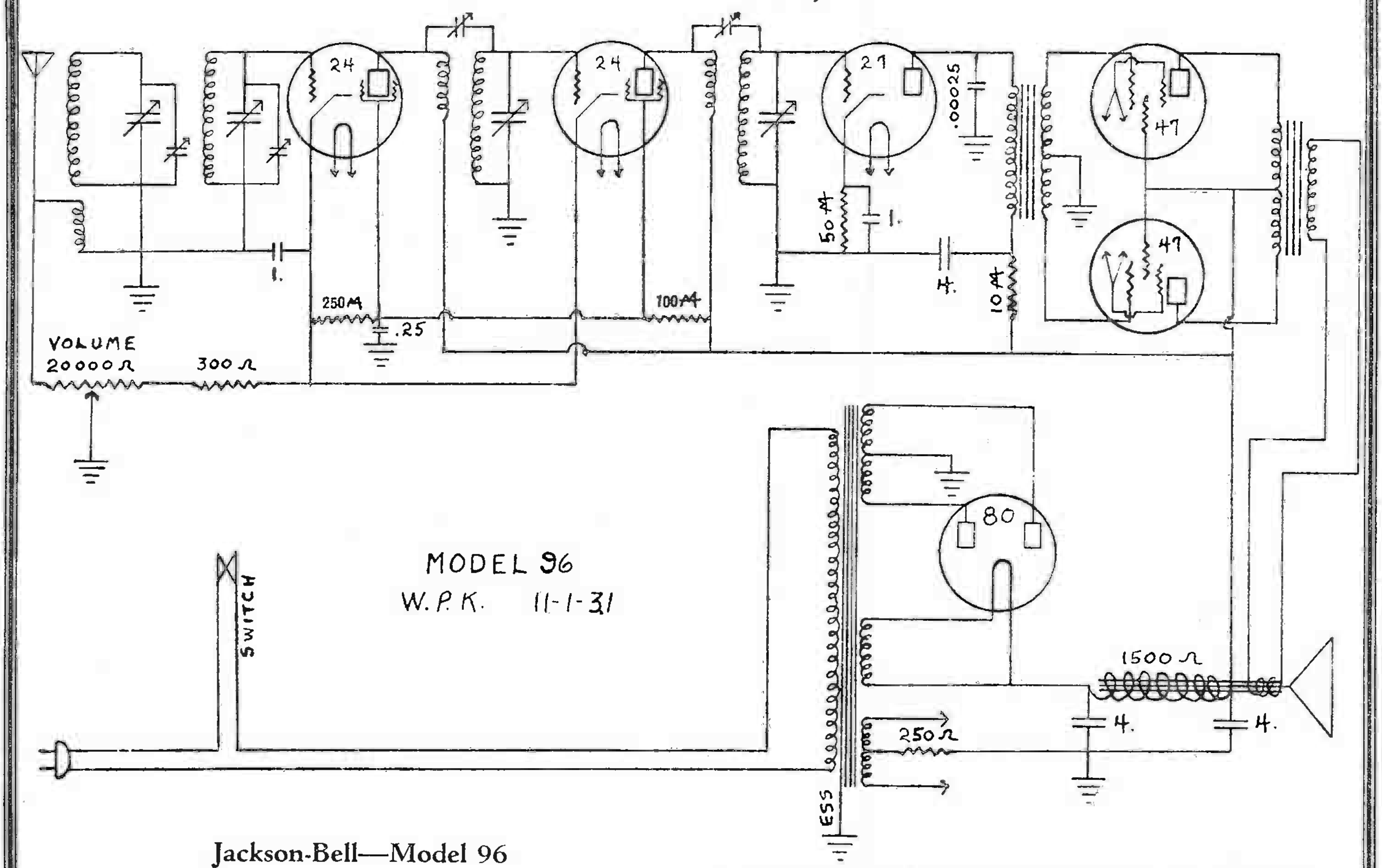

Jackson-Bell—Model 96

CIRCUIT:

The circuit of the Model 96 is of the pre-selector band pass, T.R.F. variety, impedance coupled to give even gain over the full broadcast band. It has two screen grid R.F. stages, a 227 power detector and two No. 247 Pentodes in push-pull, transformer coupled.

VOLUME CONTROL:

The volume is controlled by the regulation of the C bias of the R.F. stages and consists of a 20,000 ohm potentiometer connected in the cathode returns to ground thru the arm of the control. The other side of the potentiometer is tapered to approximately 25 ohms one fourth of the way, which is in series with the antenna, shorting out the antenna on decreasing volume. A bleeder resistor of 100,000 ohms connected from screen to cathode is also used to regulate the drop in the volume control. This gives the proper bias to secure minimum volume that is undistorted. The important thing to consider in a volume control of this type is that the minimum volume should be accomplished by partly suppressing the incoming signal as well as increasing the tube bias. If the tube bias alone is used, there will be distortion due to self rectification in R.F. stages.

A simple test where distortion is present at minimum volume is to replace the 24 tubes with 51 tubes. The 51 tubes have a longer grid swing before reaching this critical point, and if the distortion is eliminated by this change, then a higher resistance bleeder should be used on the volume control for the 224 tubes. Undoubtedly, this condition will not be encountered if your set is in the average location.

In view of the fact that many of our distributors, dealers and service men have requested this information so frequently, we have laid some stress on the detailed data above given on this type of volume control. This information, most all of our models employ this type of control.

ALIGNMENT:

See that antenna bobbin is pushed back over mounting bracket as far as it will go. If this bobbin is not in the proper place on the inside of the coil, it will cause the set to be wild on the high frequency end. Be sure that both lugs on lower end of band pass coils are firmly soldered to ground wire. Adjust all trimmer condensers by ear for maximum signal at 1400 kilocycles on oscillator. This point should be reached with R.F. and detector coil trimmers screwed down (not forced). If R.F. coil trimmer is part way out when peak is reached. slide back the shielding slightly on the grid lead running to the tuning condenser from the R.F. coil underneath chassis and again set R.F. Trimmer.

If using oscillator and output meter, tune to extreme high frequency end of dial and re-align trimmers for maximum peak reading on meter. When this is done, slight oscillation should occur at this point with volume control at maximum. If not, check trimmers by ear very carefully until oscillation or near oscillation is approached. With volume control set at maximum and with ground removed, tune over entire range of dial slowly, as stations are passed there should be a slight indication of oscillation over entire range of dial. If not, slight plate bending may be necessary at various points.

As a final precaution in aligning the set, be sure that exact peak is reached at the extreme high frequency end of the dial before attempting further alignment. If oscillation is not easily reached, be sure that both R.F. and detector trimmers are tightly screwed down (not forced) while checking receiver over entire range. If receiver is wild at high end, see that the condenser lead on the antenna coil is pushed away from the pilot light leads and also check grid leads to gang condenser moving them away if necessary from the shielded plate leads. See that all leads are pushed down in shield cans as far as possible and be certain that the shield cans are well grounded.

VOLTAGES:

Filament — Approximately 2.3 on all tubes
Plate — Approximately 220 on all tubes
Screen — R.F. tubes 75-90 V.
Bias — R.F. tubes (3 V. at maximum Volume
(10-15 V. at minimum Volume
Detector — (16 V. at minimum volume
(25 V. at maximum volume
Pentodes — 14-16 Volts C Bias
Secondary — 320 A.C. Volts each side with load.

JACKSON BELL, Ltd.

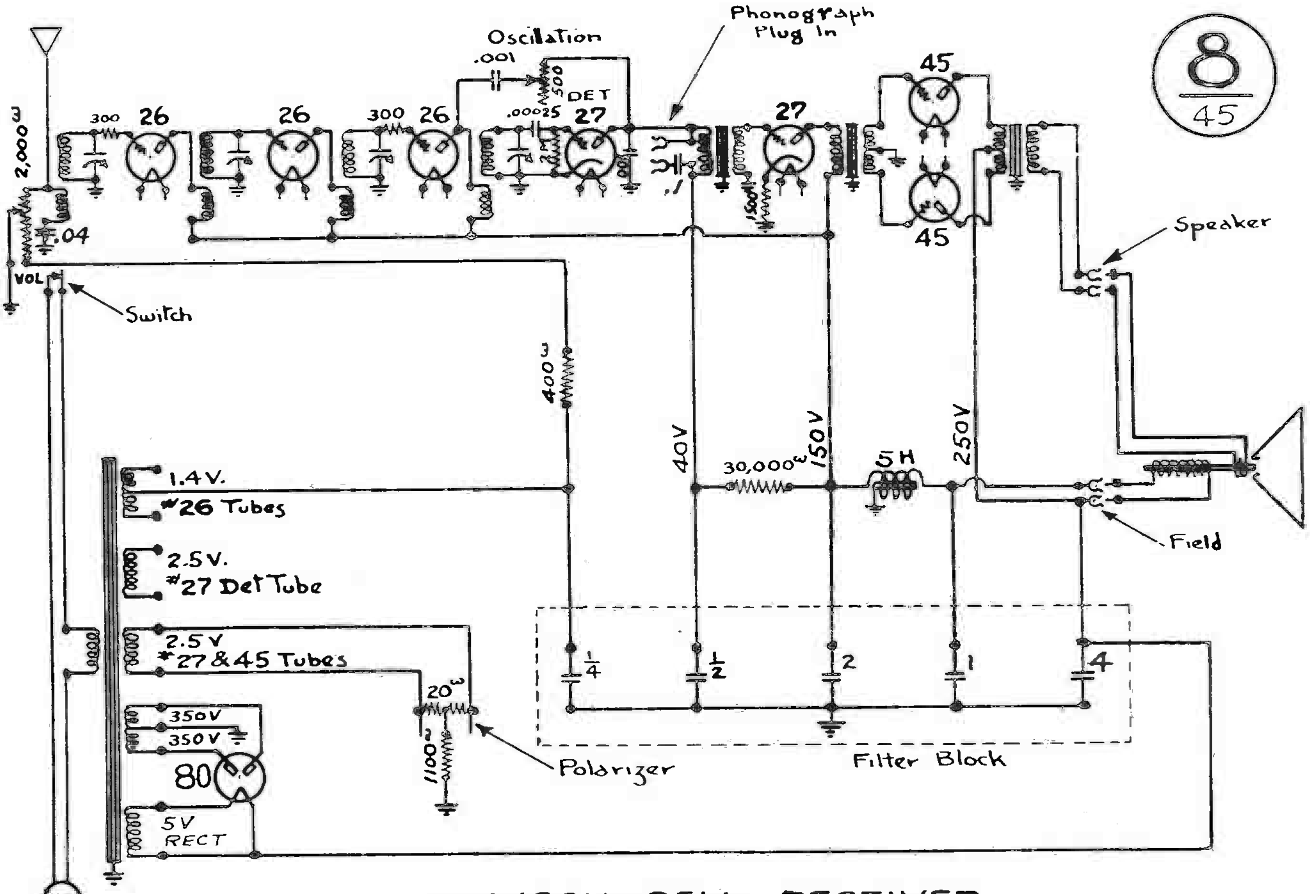

JACKSON-BELL RECEIVER
MODEL 845

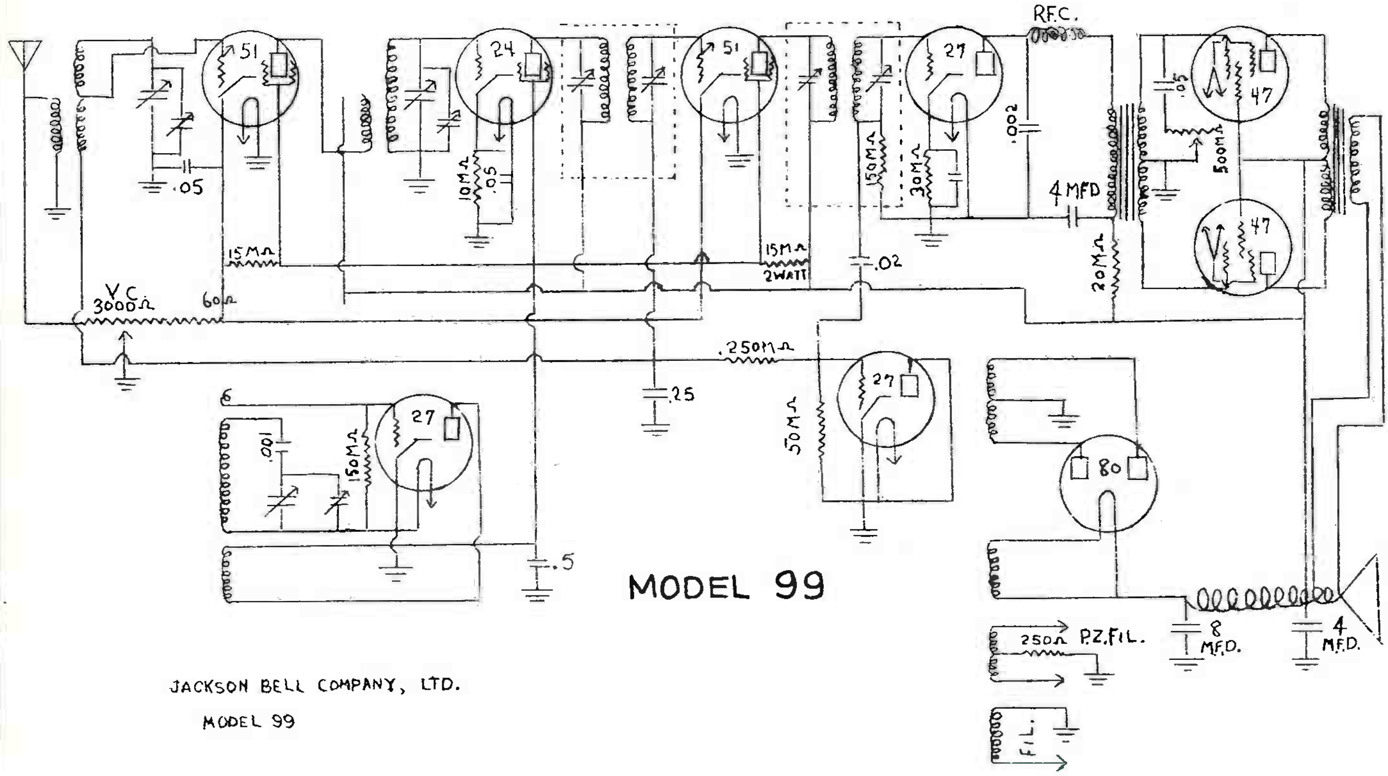

MODEL 99

JACKSON BELL COMPANY, LTD.
MODEL 99

JENKINS & ADAIR, Inc.

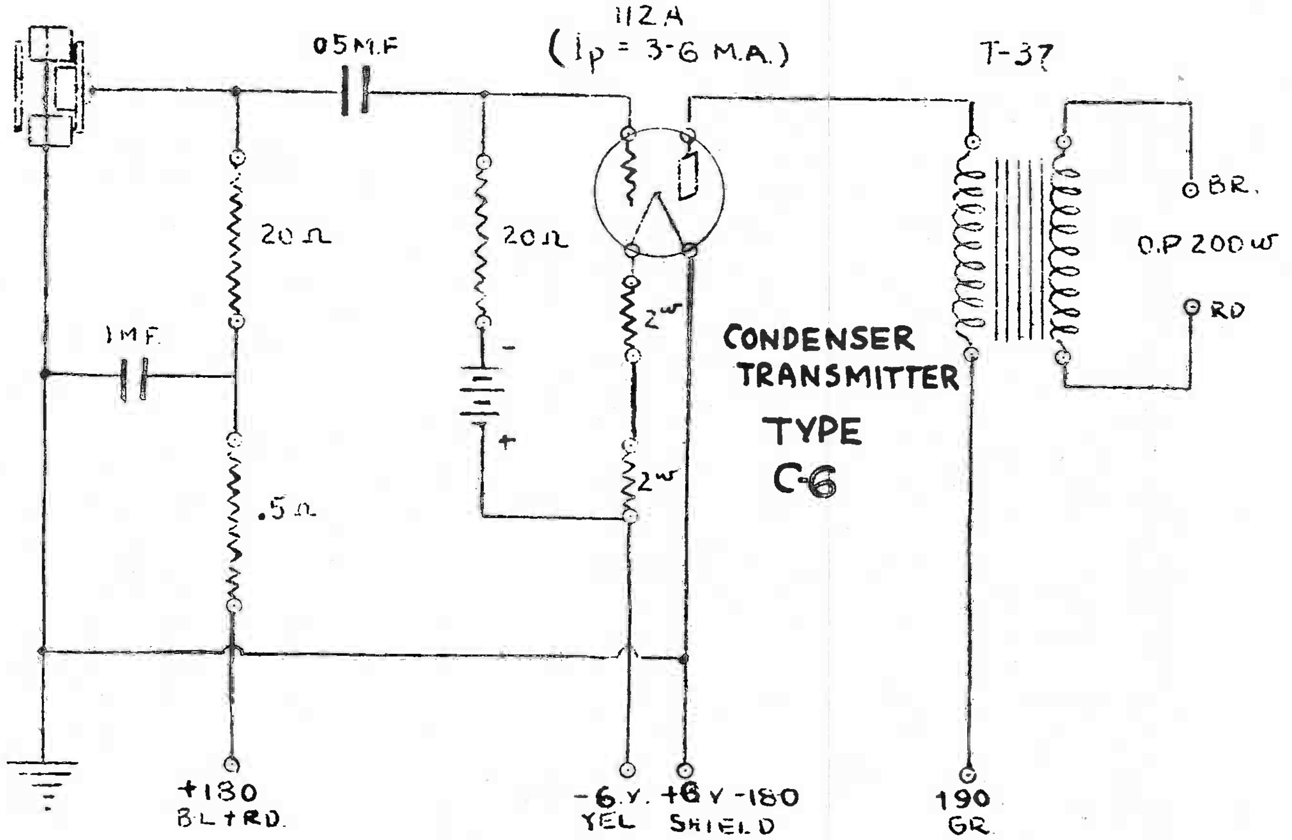

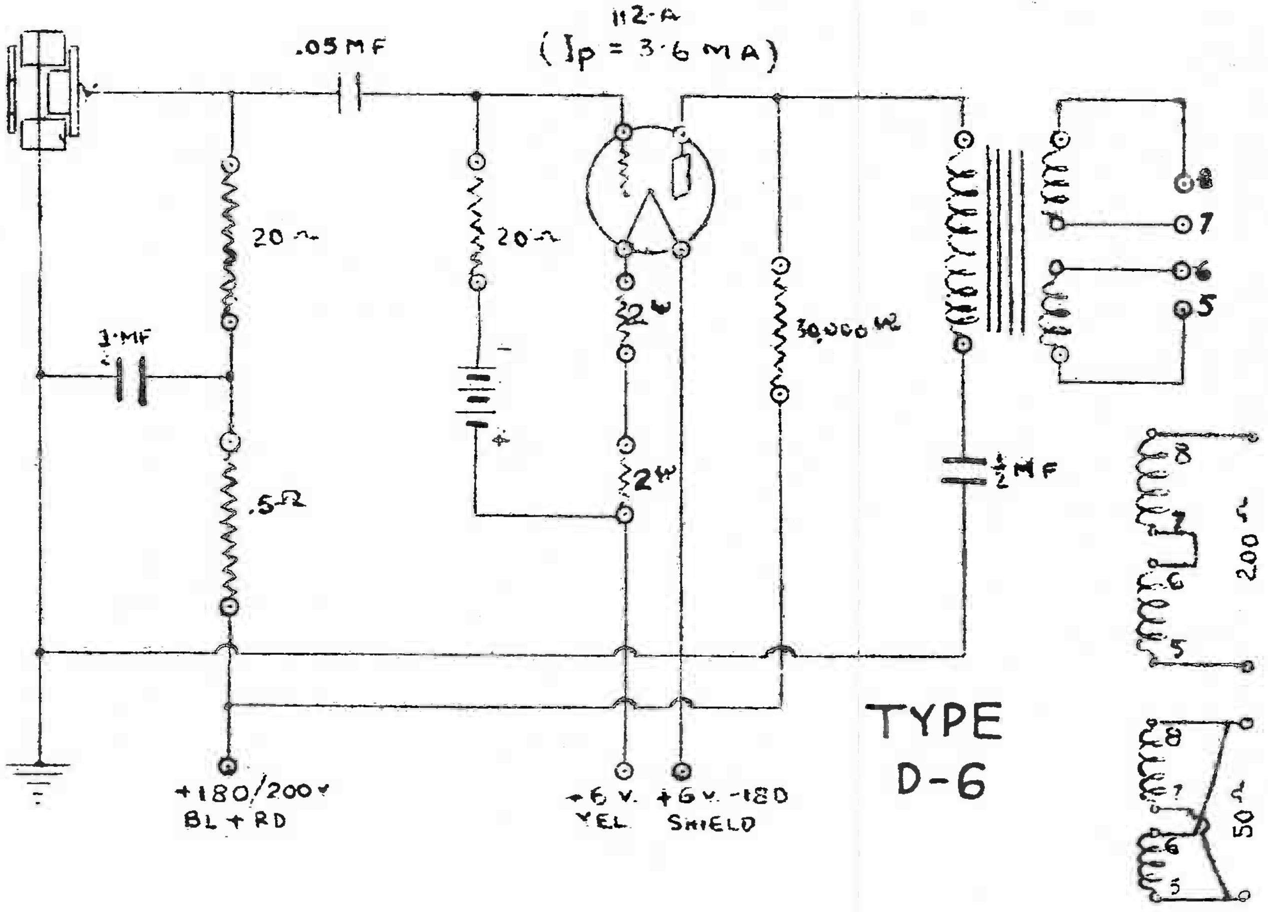

JEWELL ELECTRICAL INSTRUMENT CORP.

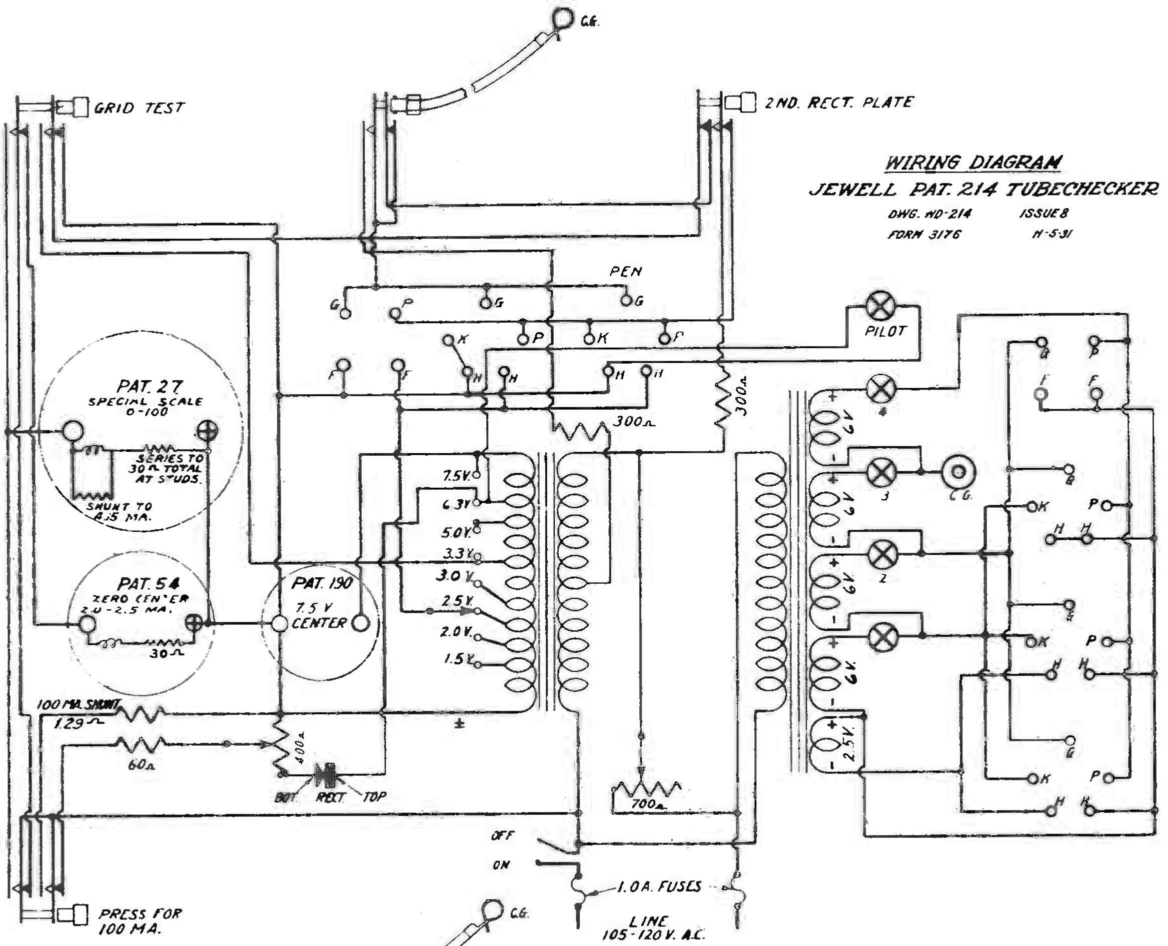

WIRING DIAGRAM
JEWELL PAT. 214 TUBECHECKER
DWG. WD-214 ISSUE 8
FORM 3176 11-5-31

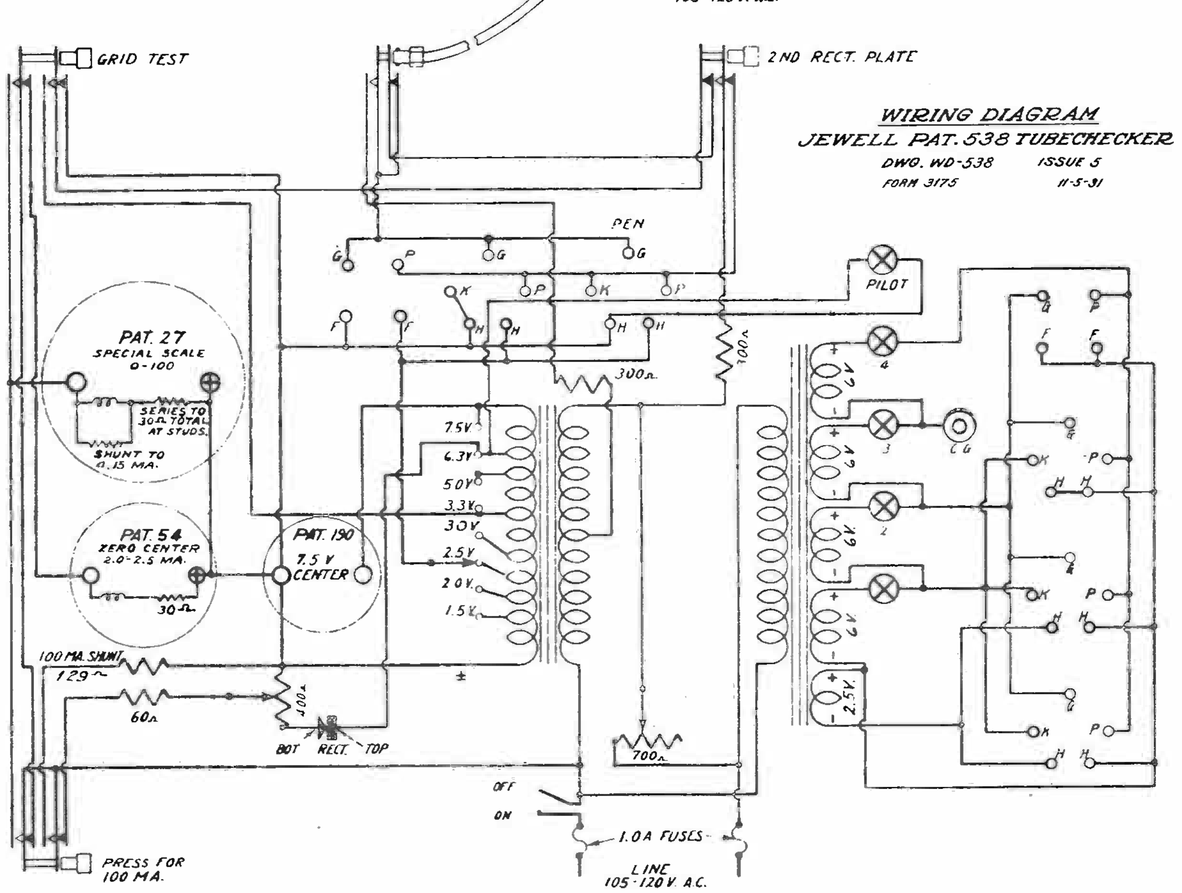

WIRING DIAGRAM
JEWELL PAT. 538 TUBECHECKER
DWG. WD-538 ISSUE 5
FORM 3175 11-5-31

JEWELL ELECTRICAL INSTRUMENT CORP.

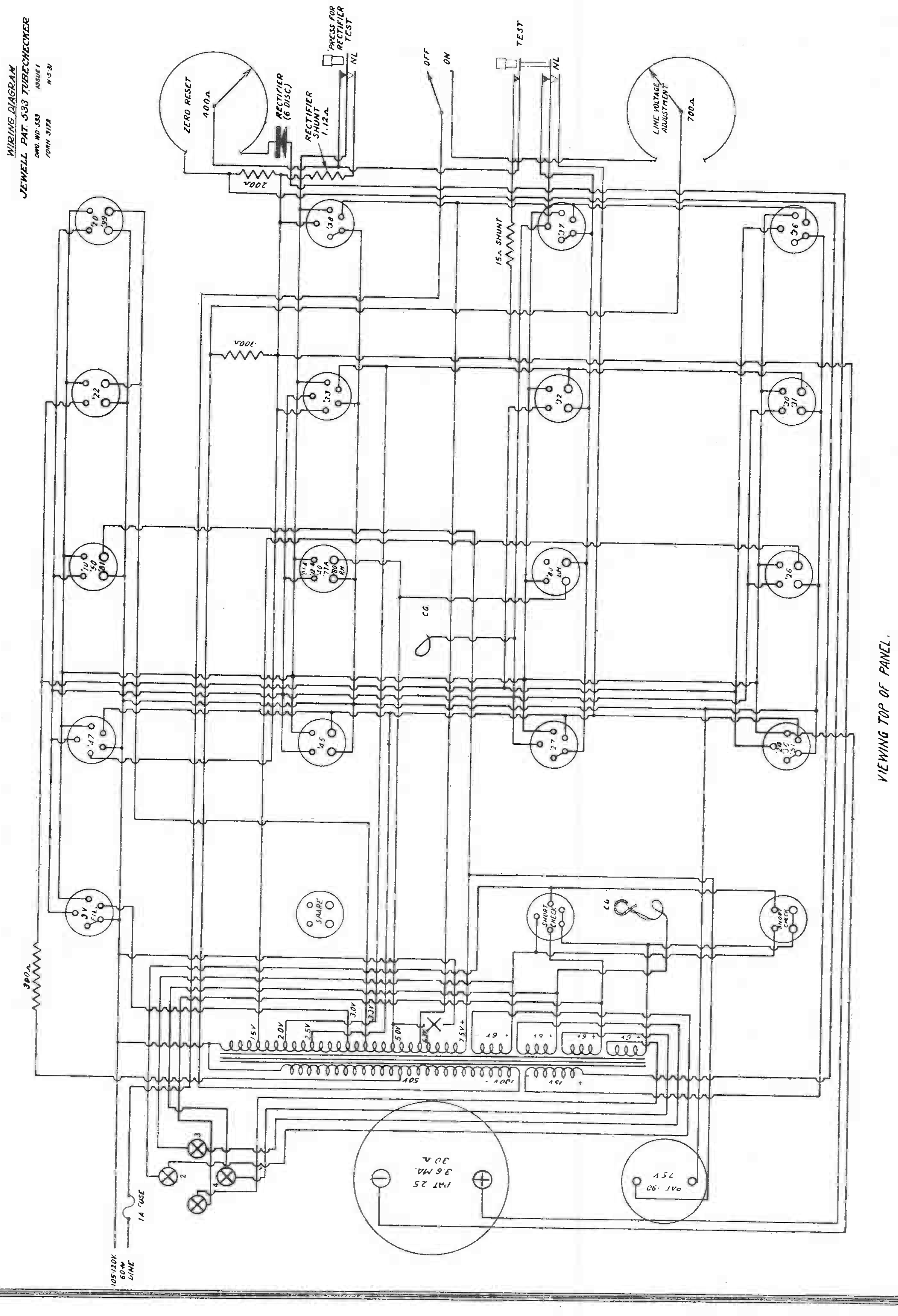

JEWELL ELECTRICAL INSTRUMENT CORP.

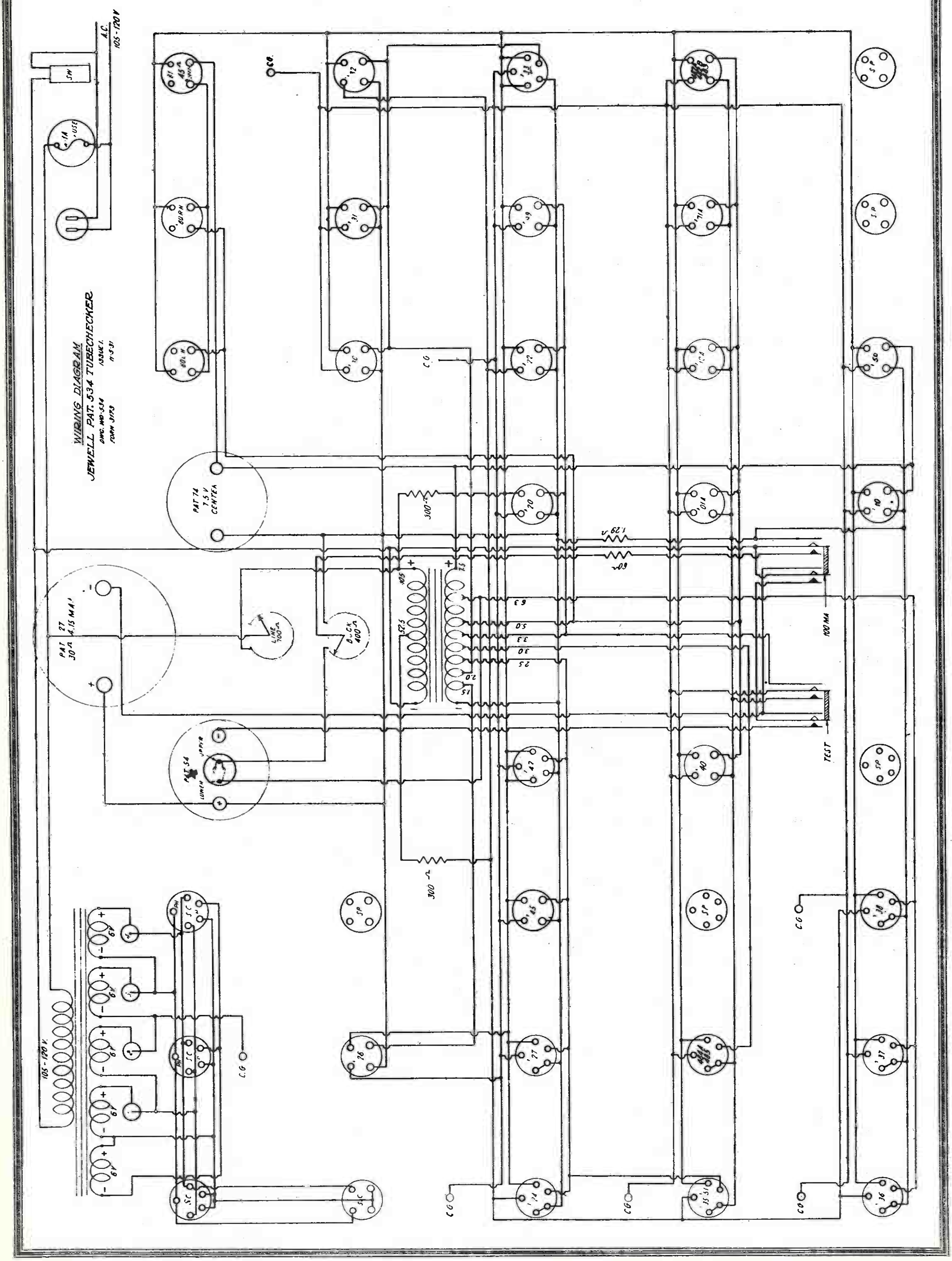

KELLER-FULLER MFG. CO., Ltd.

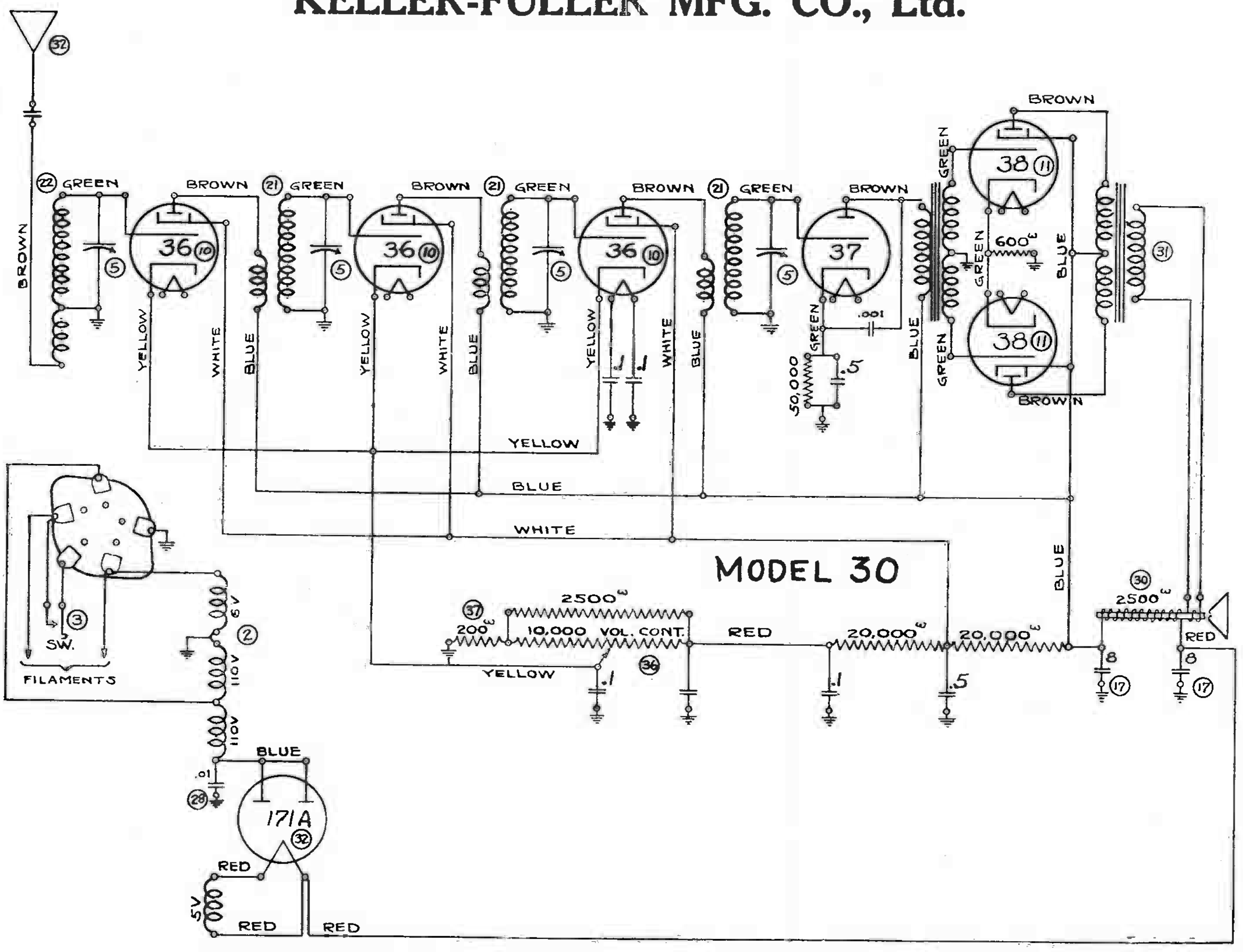

MODEL 30

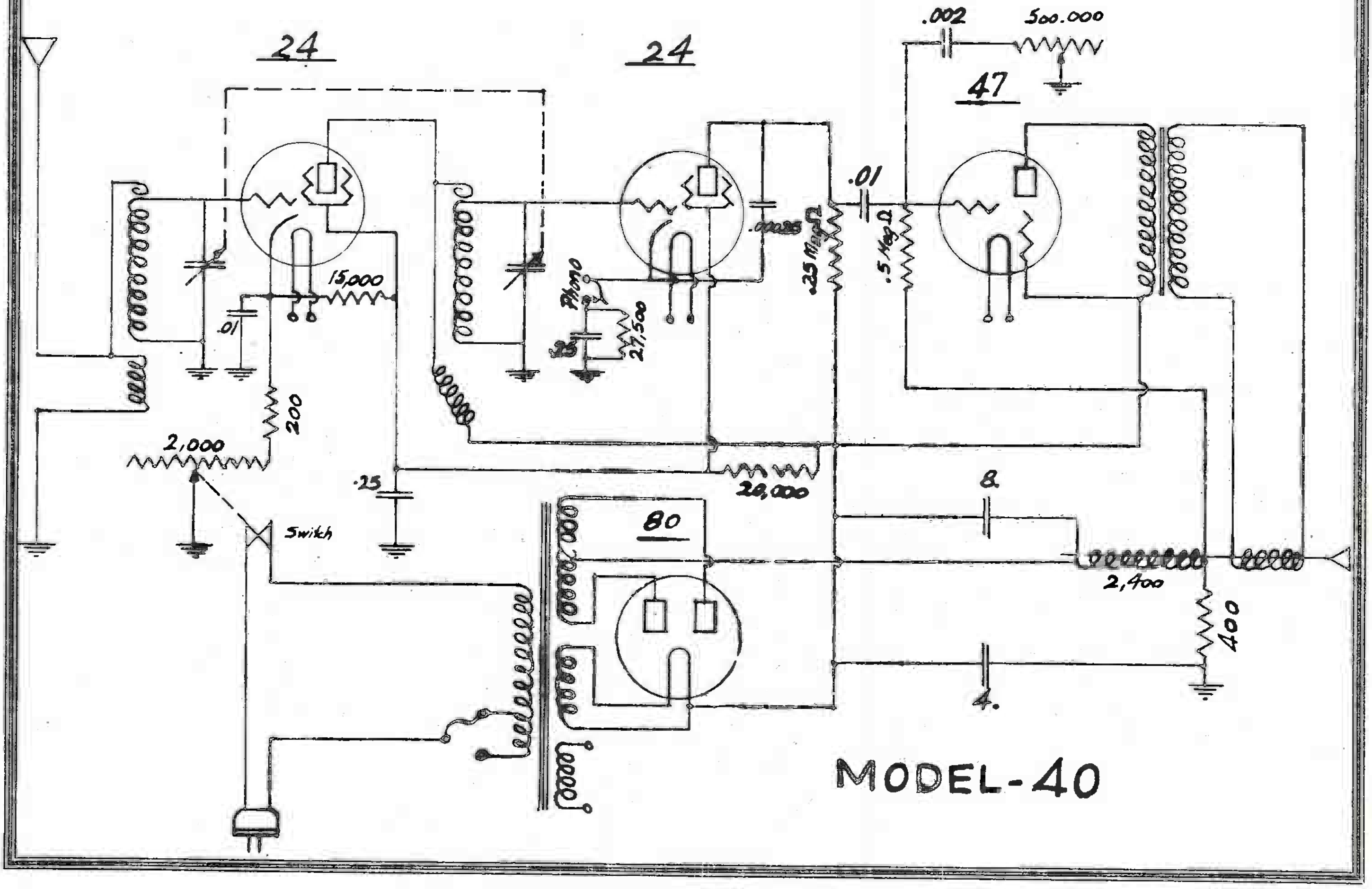

MODEL-40

COLIN B. KENNEDY CORP.

DESCRIPTION

THE KENNEDY Model 53 short wave unit operates on the superheterodyne principle, and is commonly called a converter or adapter.

In factory assembled combinations the short wave unit is already properly connected to the broadcast receiver. It is always advisable to check over this wiring, however, and see that all connections are properly and securely made.

The three wires from the rear-center of the unit are to be connected as follows:

BLACK: The black wire is to be connected to the ground post of the long wave receiver. The actual ground wire is attached to the GND post of the short wave unit and left there permanently.

WHITE: The white wire is to be connected to the antenna post of the long wave receiver. The actual antenna, or aerial, is attached to the ANT post of the short wave unit and left there permanently.

RED: The red wire is to be attached to a source of "B" voltage—either at the long wave chassis or speaker. Any voltage of from 150 to 250 volts is suitable. It should be obtained from some point in the long wave receiver chassis, speaker or filter system, where it will receive fairly good filtering and be relatively free from A. C. hum.

Obtaining "B" voltage is usually a very simple matter, particularly with sets having dynamic speakers. The speaker field is energized with D. C. and a connection can be made to one terminal, the proper terminal being located with a voltmeter. Factory assembled combinations are provided with a "B" voltage connection, already wired. Obtaining the "B" supply from the long wave receiver adds no noticeable burden to its power pack.

The short wave unit contains its own filament power supply, and thus imposes no additional burden on the long wave set transformer.

The short wave range of from 15 to 200 meters is divided into three bands. With switch to left, 15 to 32 meters. Switch at center, 30 to 90 meters. Switch to right, 80 to 200 meters. The oscillator circuit is tuned, while the antenna-detector circuit is untuned. This elimates the necessity for elaborate and complicated switching devices. A three-point tap switch is employed, which may readily be tested for contact with a battery, meter and pair of test leads. Possible difficulties have been overcome and increased efficiency has been attained by definitely tuning the output to the intermediate frequency of 1,000 kilocycles, and so dividing the short wave range that repeat points are not found to be annoying.

The dial of the long wave receiver, in factory assembled combinations, is marked at the frequency of the short wave unit output. This point is approximately 1,000 kilocycles.

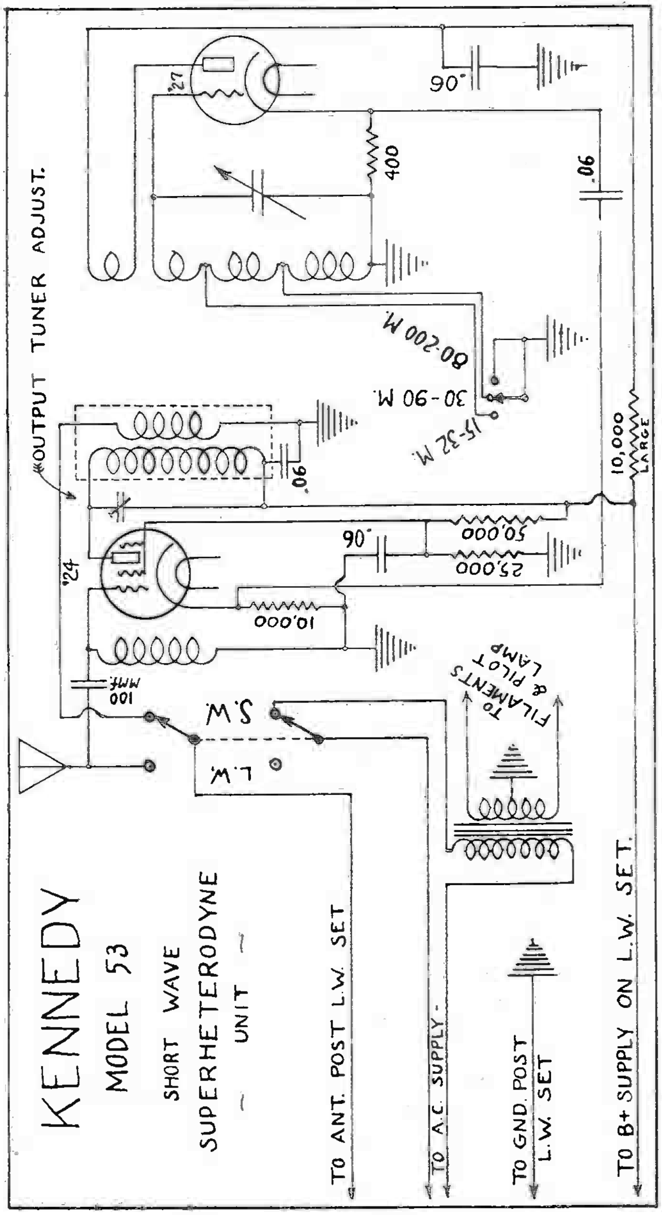

If for any reason the output frequency of the short wave unit has shifted it may be retuned as follows. Set long wave dial at 1,000 kilocycles or at mark. Tune in short wave signals. Tune output by means of adjustment screw, until signal is loudest. Use a bakelite screw driver. The output adjusting screw is at right hand end of short wave chassis, facing the rear.

In the event a strong local station at or near 1,000 kilocycles interferes with short wave reception, the long wave dial may be moved slightly to right or left of 1,000 kilocycle mark, and the output retuned, as above, to obtain greatest short wave output at this newly selected frequency. Move long wave dial off 1,000 K. C. only a few kilocycles at a time, returning the short wave output each time, until the interference is eliminated.

Should the short wave output adjustment be far out of tune, a simple method of resetting is to feed the output of a laboratory or service man's oscillator (tuned to 1,000 K. C.) into the grid of the 224 tube of the short wave unit (while operating) and with long wave receiver also set at 1,000 K. C. (previously set by means of same oscillator, for accuracy). The short wave output adjustment screw may now be turned until maximum oscillator signal is heard, or an output meter, on long wave set, indicates maximum.

COLIN B. KENNEDY CORP.

DESCRIPTION

THE KENNEDY Model 54-A short wave unit operates on the superheterodyne principle, and is commonly called a converter or adapter.

A four-position rotary cam switch changes all connections to any one of three short wave band circuits or to long wave position. This switch makes the proper power and antenna connections, turning off the short wave unit and connecting the antenna directly to the broadcast receiver when in the long wave position. When switched to any one of the short wave bands, the tubes of the short wave unit are supplied with power, and antenna and output connections are made. The short wave unit is, naturally, not used for long wave broadcast reception.

In factory assembled combinations the short wave unit is already properly connected to the broadcast receiver. It is always advisable to check over this wiring, however, and see that all connections are properly and securely made.

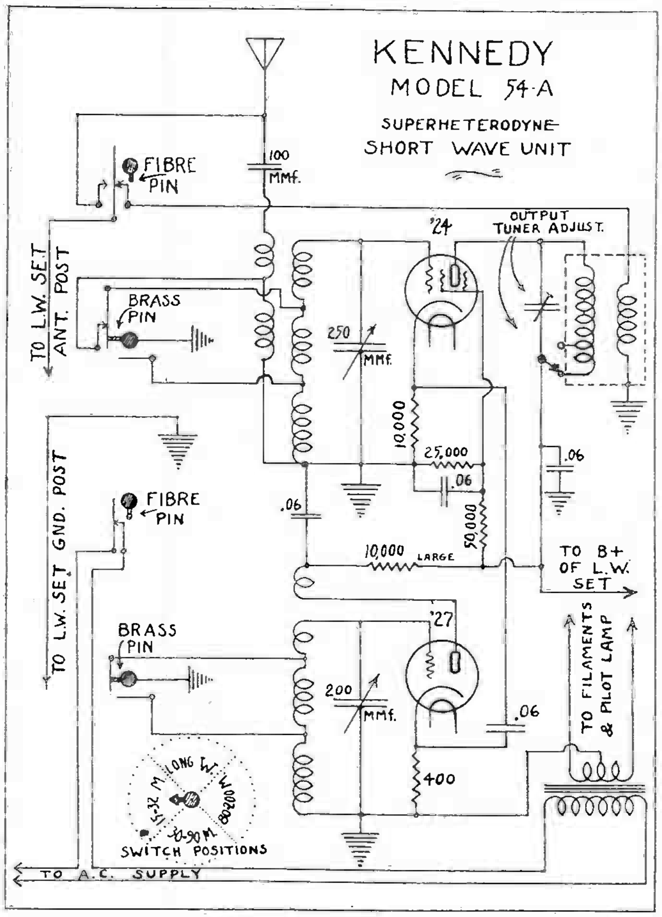

Model 55

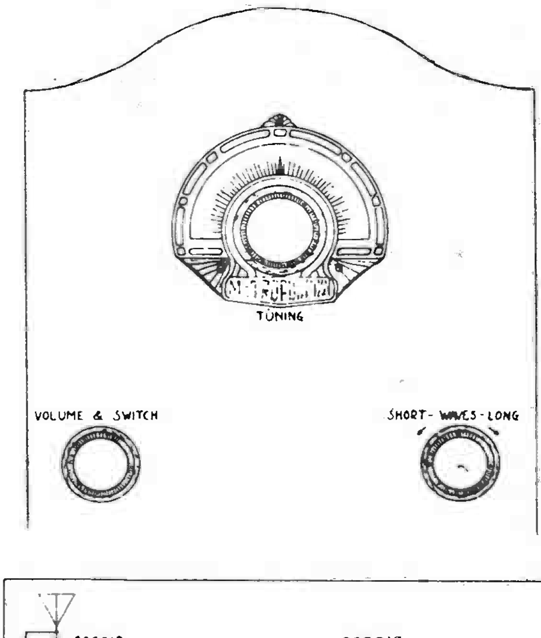

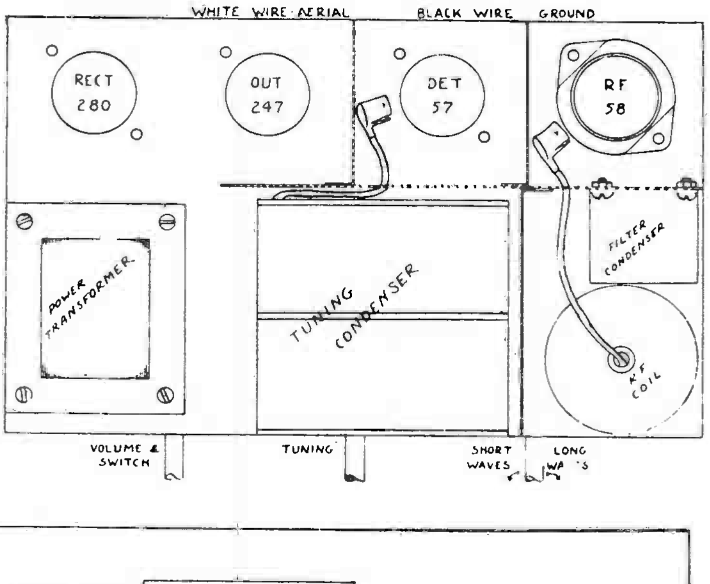

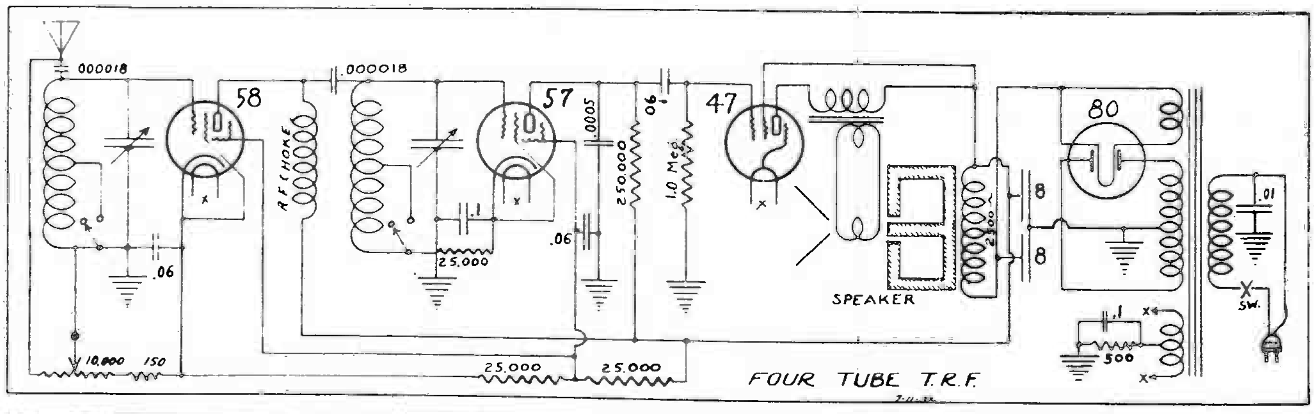

COLIN B. KENNEDY CORP.

10 TUBE A.V.C. MODEL ~ 62

THE MODEL 62 Kennedy chassis employs a ten tube superheterodyne circuit. The complete shielding to be noted is essential in reducing the annoying radiation so common in receivers of this type to a very low minimum. An intermediate frequency of 175 kilocycles has been adopted as this has become more or less an accepted standard and is available on modern service men's oscillators and test devices.

As is generally known, the principle of the superheterodyne circuit is that of combining the received frequency with that of a local oscillator, and thereby generating a new frequency, which is then known as the "intermediate" frequency and which is further amplified by a succession of fixed-tuned circuits and R. F. tubes. It is obvious, since the "intermediate frequency" tuners or "Transformers" are definitely tuned to a particular frequency, and not variable, that the selector tuner-condenser sections and oscillator tube condenser section with their associated coils —must "track" at a constant difference in frequency. This "tracking" is accomplished by equipping the oscillator circuit with an especially designed inductance bridged by carefully computed "pad" condensers in the conventional manner. The procedure for alignment is discussed later.

The tubes employed in this receiver are as follows, voltages as read with a 1,000 ohm per volt D. C. meter being included for service convenience:

Purpose	*Type*	*Fil., A. C.*	*Plate*	*Screen*	*Bias*
R. F.	235	2.45	212	80	4
1 Det.	235	2.45	214	70	6
Osc.	227	2.45	80		6
1 I. F.	235	2.45	215	80	4
2 I. F.	235	2.45	214	80	7
2 Det.	227	2.45	(DIODE)		
1 A. F.	227	2.45	200		10
Power Tubes	247	2.44	300	285	19
Rect.	280	4.95			

Volume control full on. Line voltage 120. Plate and screen voltages measured from cathodes to socket terminals. Bias measured from cathodes to ground.

Small deviations above or below the values given may be expected due to variations in parts, tubes and meters used.

The automatic volume control functions with the diode second detector. The rectified radio frequency flows from the grid and plate (which are joined) to cathode and ground. It returns through the manual volume control and the two 100,000 ohm resistors to the secondary of the last I. F. transformer, and back to the plate and grid, completing the rectifying circuit. No current flows in this circuit until a carrier wave is tuned in. With no current flowing, the bias for the R. F. and 1st I. F. tubes is obtained in the 300 ohm resistor in series with their two cathodes. The biases of the 1st detector and 2nd I. F. tubes are obtained by individual cathode resistors. When current flows in the diode circuit, points along the resistence path from volume control ground to secondary coil are successively more and more negative with respect to ground due to the drop in these resistors. They are naturally more negative when more current flows in this circuit. Advantage is taken of this to provide almost perfect automatic bias control for the first three tubes by returning the grid circuits of these tubes to a determined point on these resistors. Thus, the negative voltage developed by the diode circuit is added to the fixed bias already provided for these tubes. Stronger signals increase this added bias; weaker signals reduce the added bias: and the result in the over-all response is uniformity of volume level. As the volume control is rotated toward minimum or "OFF," more resistance is added to the automatic circuit, increasing its action, and at the same time operates in the audio system by tending to short out the signal to the first audio tube grid.

In all other respects, the circuit is entirely conventional, and may be tested in the regular ways with standard equipment.

Continuity of circuit and coils may be tested with a battery, meter and pair of test leads. If necessary to replace a coil, it is advisable to replace the entire set of three with a new correctly matched set.

Alignment

Before aligning or testing alignment of tuned circuits, it is desirable to "short out" the automatic volume control action. This is done by grounding the grid return wire of the first three tubes at some point between the 10,000 ohm and 100,000 ohm grid return filter resistors. It will be noted that the low ends of the detector coil and 1st I. F. coil secondaries are connected to this wire. The antenna coil is also connected, but through a 10,000 ohm filtering resistor.

In aligning, it is first desirable to see that the intermediate frequency transformers are properly set. This is most readily accomplished by using an output meter and an accurate source of 175 kilocycle radio frequency, such as an oscillator. The accuracy of this oscillator may be checked by tuning a radio set to a station on 700 kilocycles and placing the oscillator near the antenna. A harmonic of the 175 kilocycle oscillator will "zero beat" with the station if the oscillator is correct. Other "harmonic" points may also be tried.

Remove the grid clip from the top of the first detector tube and fasten a short length of wire to the grid terminal of this tube. Lay this wire sufficiently near the 175 K. C. oscillator to note the energy from it in the output meter. With the oscillator set on exactly 175 K. C., adjust the trimmers in the tops of the I. F. transformer shields for maximum reading of the output meter. If the meter tends to read "off scale," move oscillator farther from set and wire, thereby reducing input energy. If these I. F. transformers are badly out of alignment, it may be necessary to place the "pick up" wire on the grid of the 1st I. F. tube and adjust the second transformer alone, at first, then moving wire to detector grid and proceed as above. It will be noted that the 2nd and 3rd I. F. transformers have but one adjustment, while the first has two.

The tuning condenser may be adjusted for alignment or "tracking" of the tuned circuits by a similar method except that an oscillator covering the broadcast band should be used. The output meter is used as before. The energy from the oscillator, in this case, is coupled weakly into the antenna circuit—a simple means being to place the oscillator near the antenna wire.

The receiver and oscillator are first tuned to approximately 1,500 kilocycles, and by watching the output indicator, the three condenser trimmers (reached through three holes in top-right of condenser shield, or, in some cases, through removable plate) are adjusted for maximum

COLIN B. KENNEDY CORP.

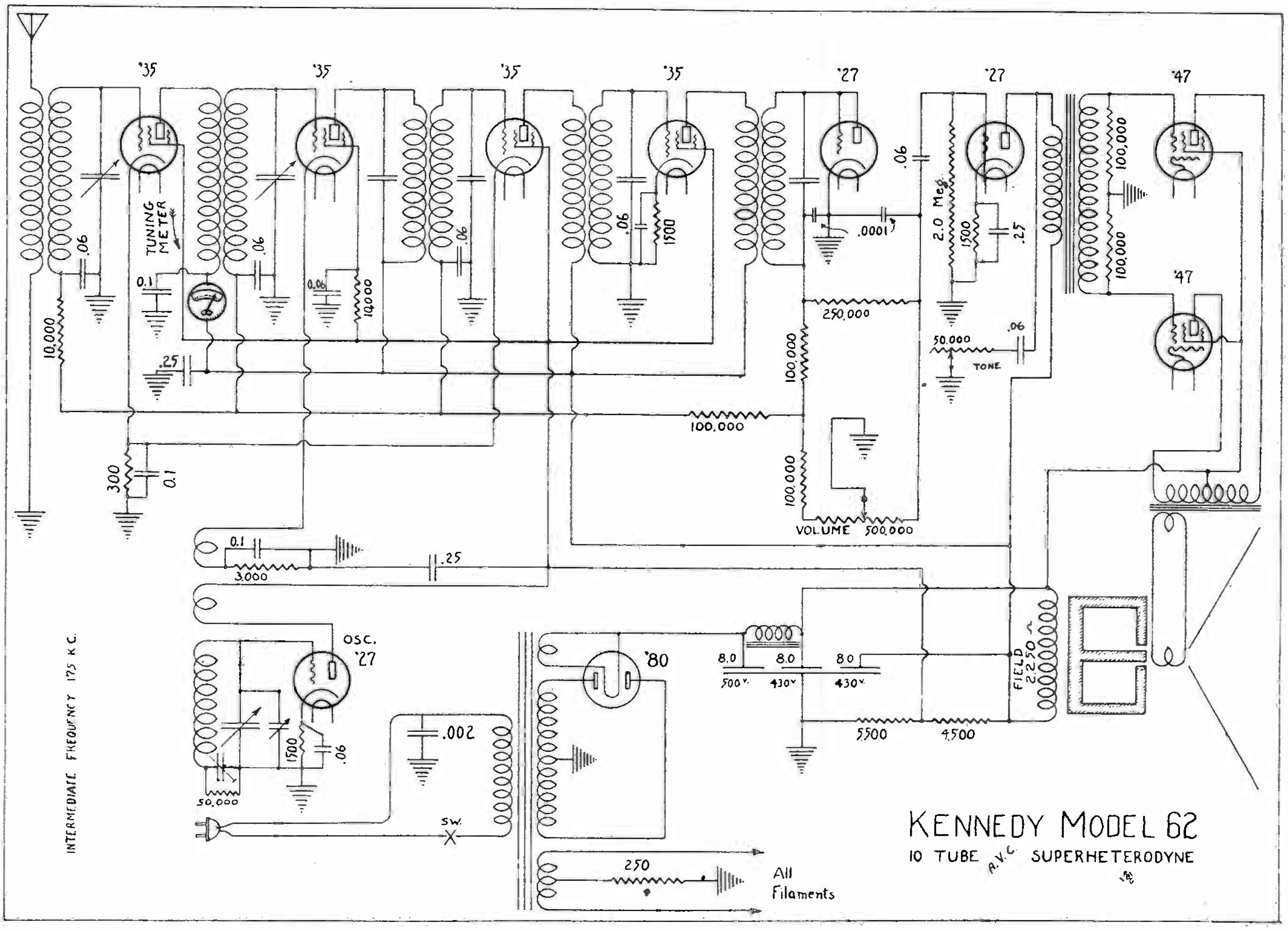

output. These three trimmers must then be left *untouched* for all further aligning.

The next step is to tune both receiver and oscillator to some point near 550 kilocycles. Here, the alignment is made by adjusting the "padding" condenser (through hole in rear of condenser shield) for maximum response. If necessary to adjust the two R. F. condenser sections, it may be accomplished by bending the condenser end plates. If found necessary to align at other than the ends of the "band," it may be done by bending the slotted end plate of the condenser rotors. Alignment of the two ends of the scale is usually quite sufficient.

IMPORTANT: It is desirable to move the dial back and forth across the signal while making the above alignments. This is particularly necessary when altering any capacities connected with the oscillator circuit. An insulated or bakelite screw driver (containing little, if any, metal) is advised for use in adjusting "trimmer" or "padding condensers."

Circuit correction: The bias for the oscillator tube, on later models, will be found to be obtained from the 1st detector cathode resistor instead of the 1,500 ohm self bias resistor as indicated. In this case, the 1st detector bias resistor has been changed from 3,000 ohms, as shown, to 1,000 ohms. The self bias resistor of the 2nd I. F. tube will be found changed to 3,000 ohms.

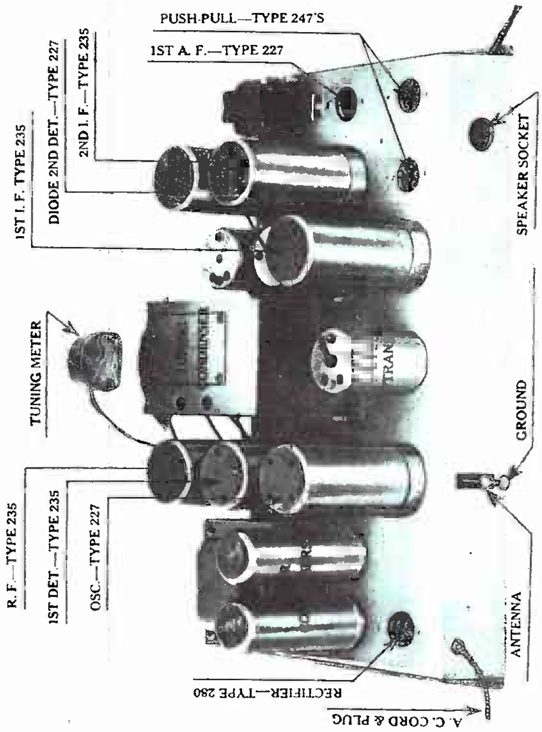

COLIN B. KENNEDY CORP.

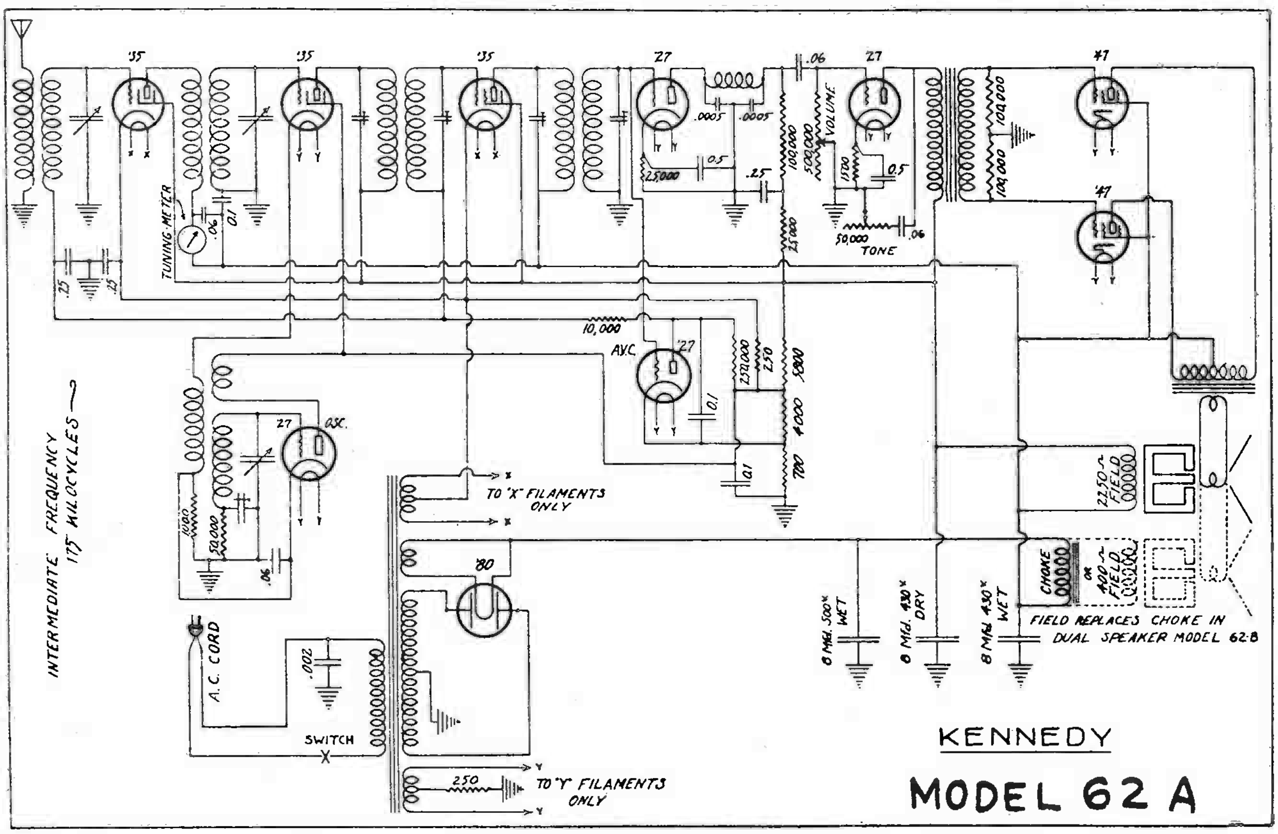

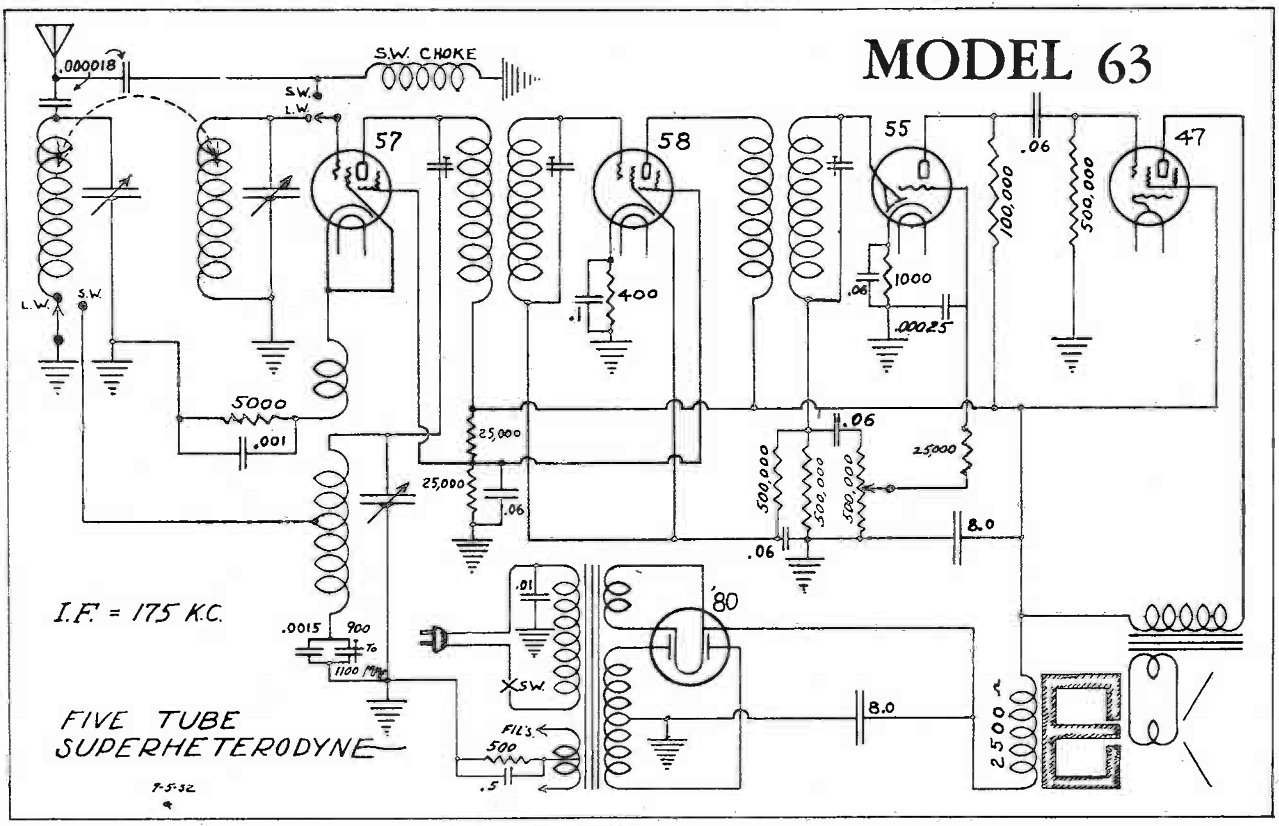

COLIN B. KENNEDY CORP.

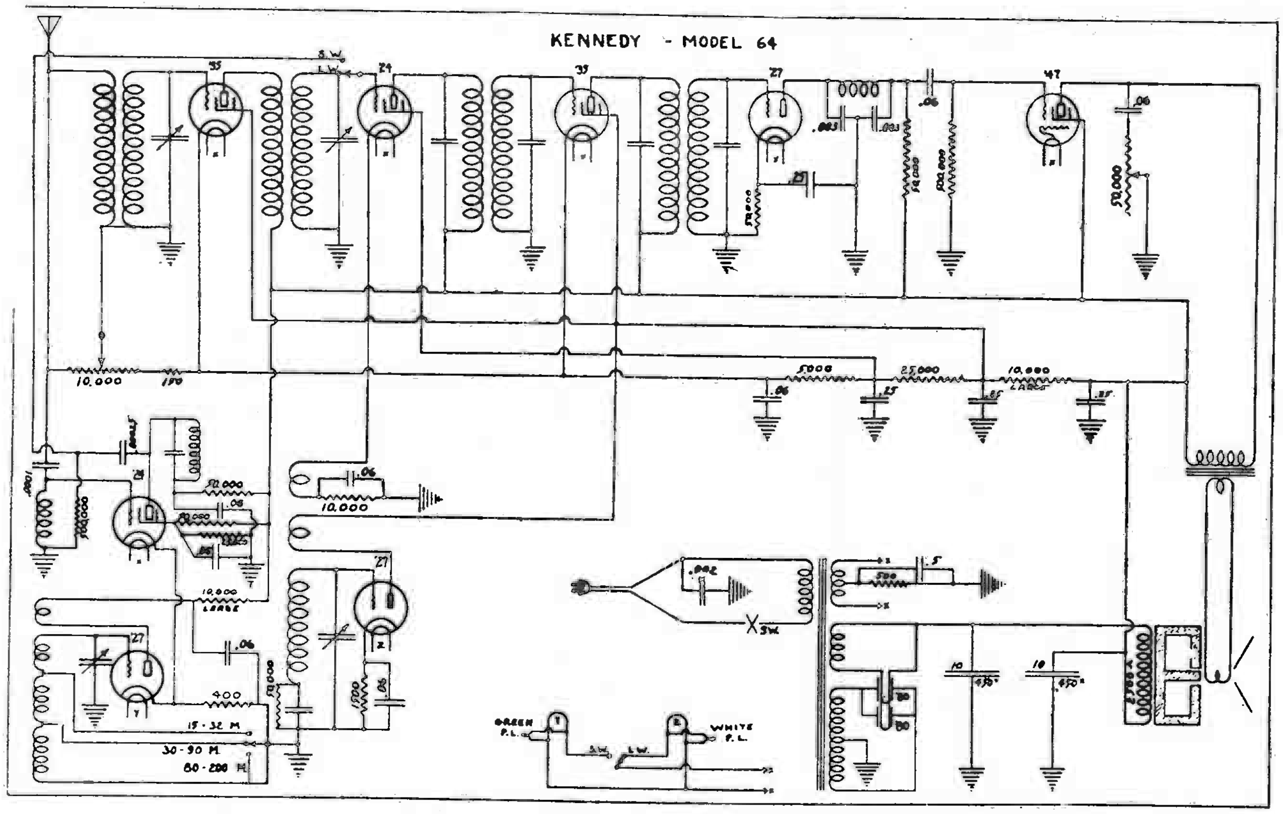
KENNEDY - MODEL 64

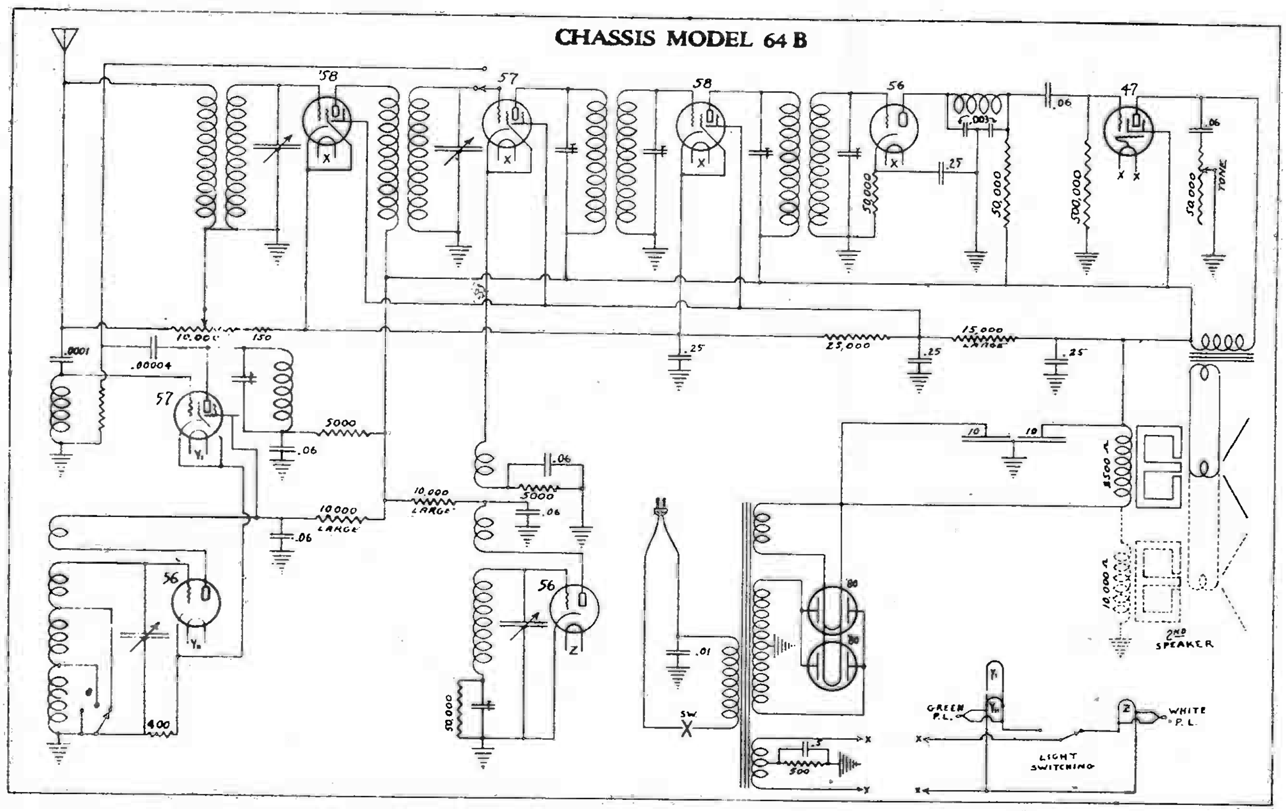
CHASSIS MODEL 64 B

COLIN B. KENNEDY CORP.

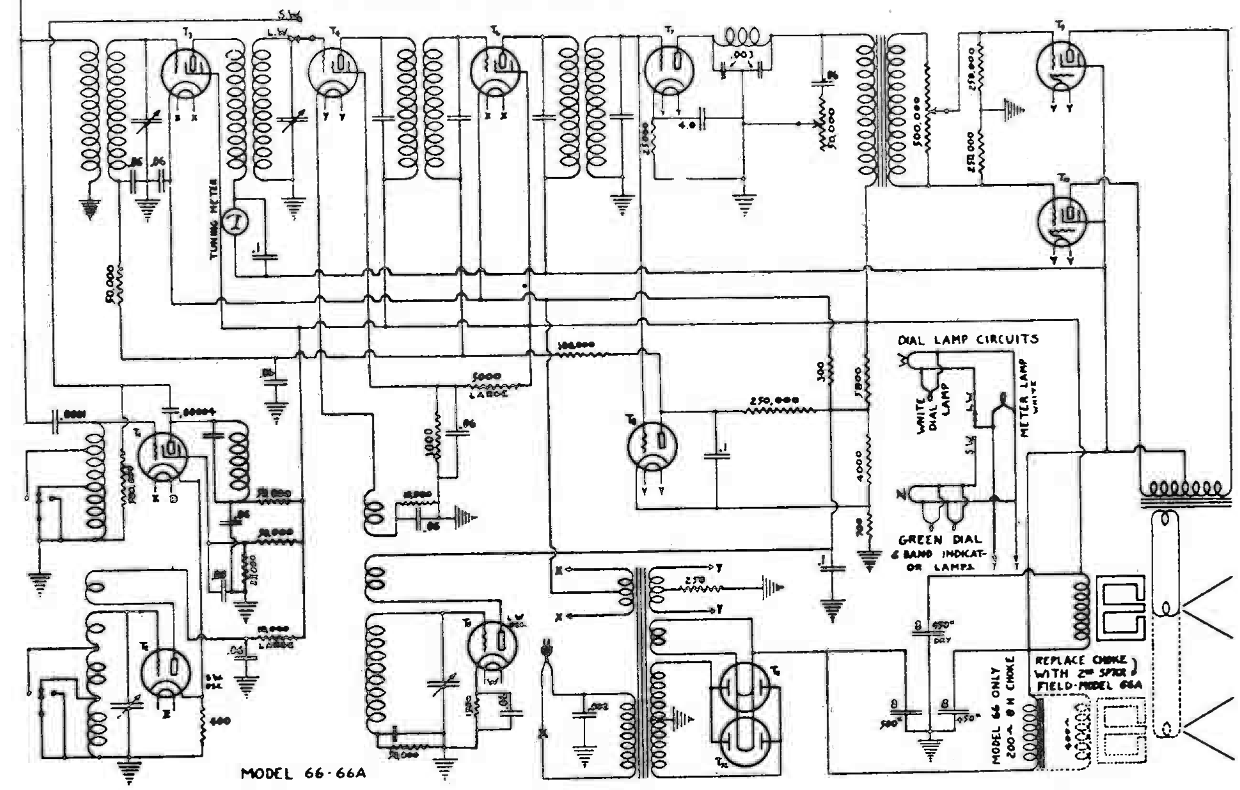

MODEL 66-66A

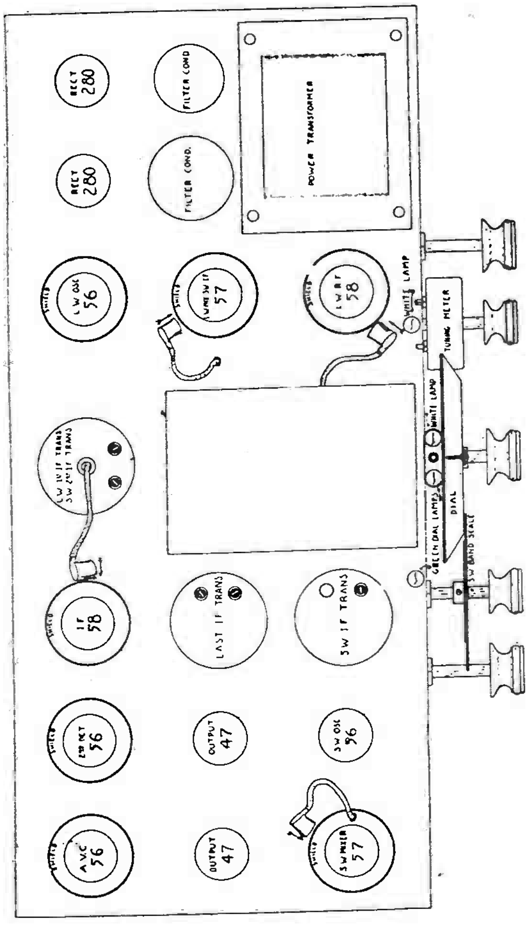

CHASSIS MODEL 66 B

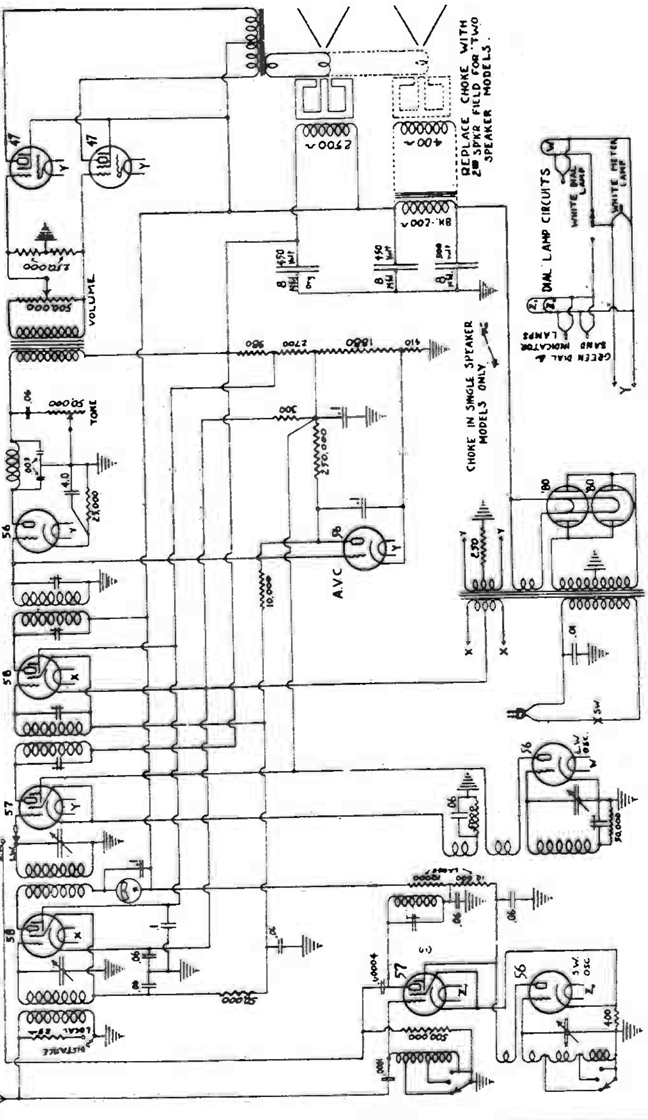

KOLSTER RADIO, Inc.

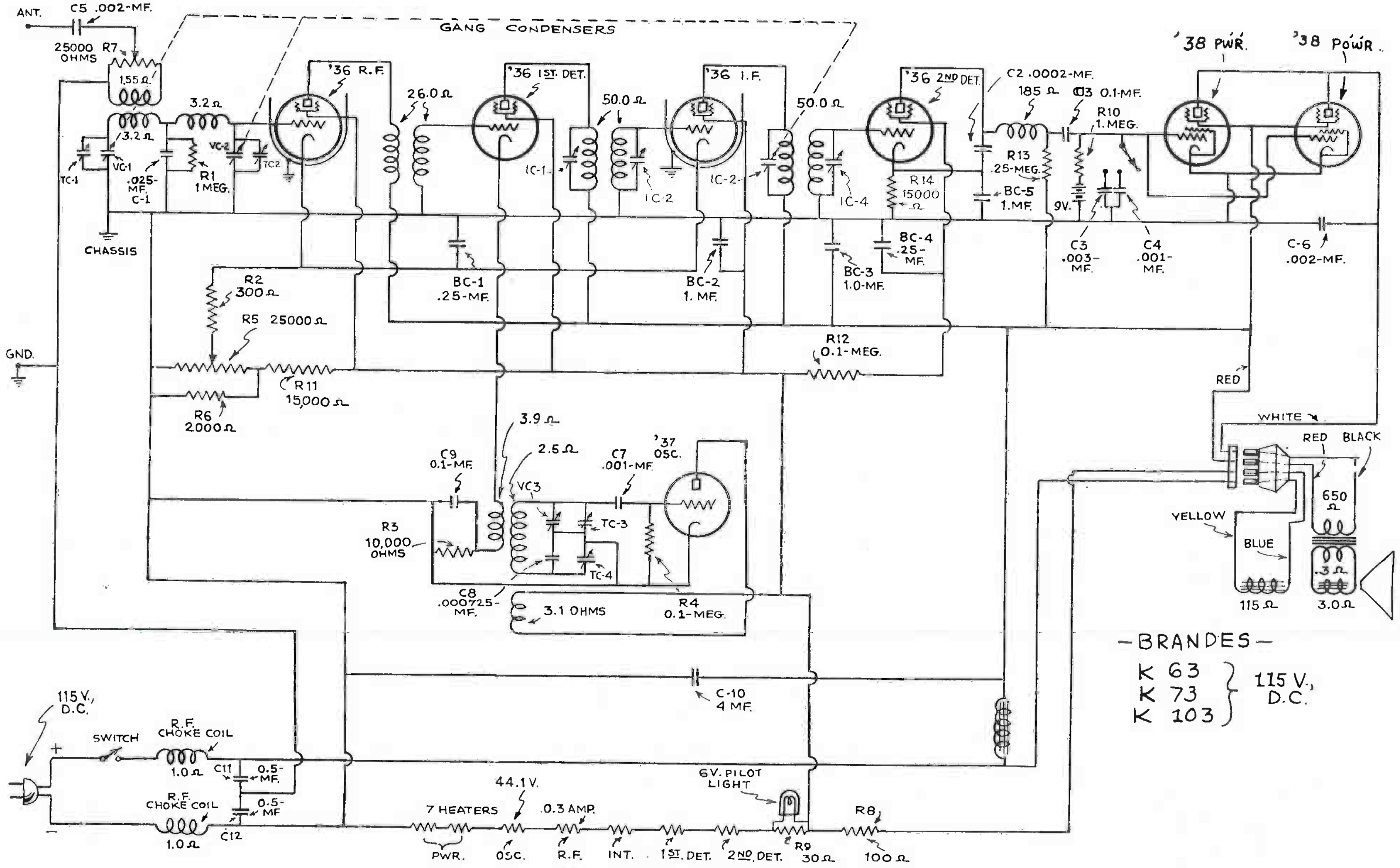

—BRANDES—
K 63
K 73
K 103
115 V., D.C.

CAPACITY	COLOR
0.0002	GRAY
0.000725	YELLOW
0.001	ORANGE
0.002	GREEN
0.003	PINK

VALUE	BODY	TIP	DOT
300	ORANGE	BLACK	BROWN
2,000	RED	BLACK	RED
10,000	BROWN	BLACK	ORANGE
15,000	BROWN	GREEN	ORANGE

VALUE	BODY	TIP	DOT
100,000	BROWN	BLACK	YELLOW
0.25MEG.	RED	GREEN	YELLOW
1.0MEG.	BROWN	BLACK	GREEN

KOLSTER RADIO, Inc.

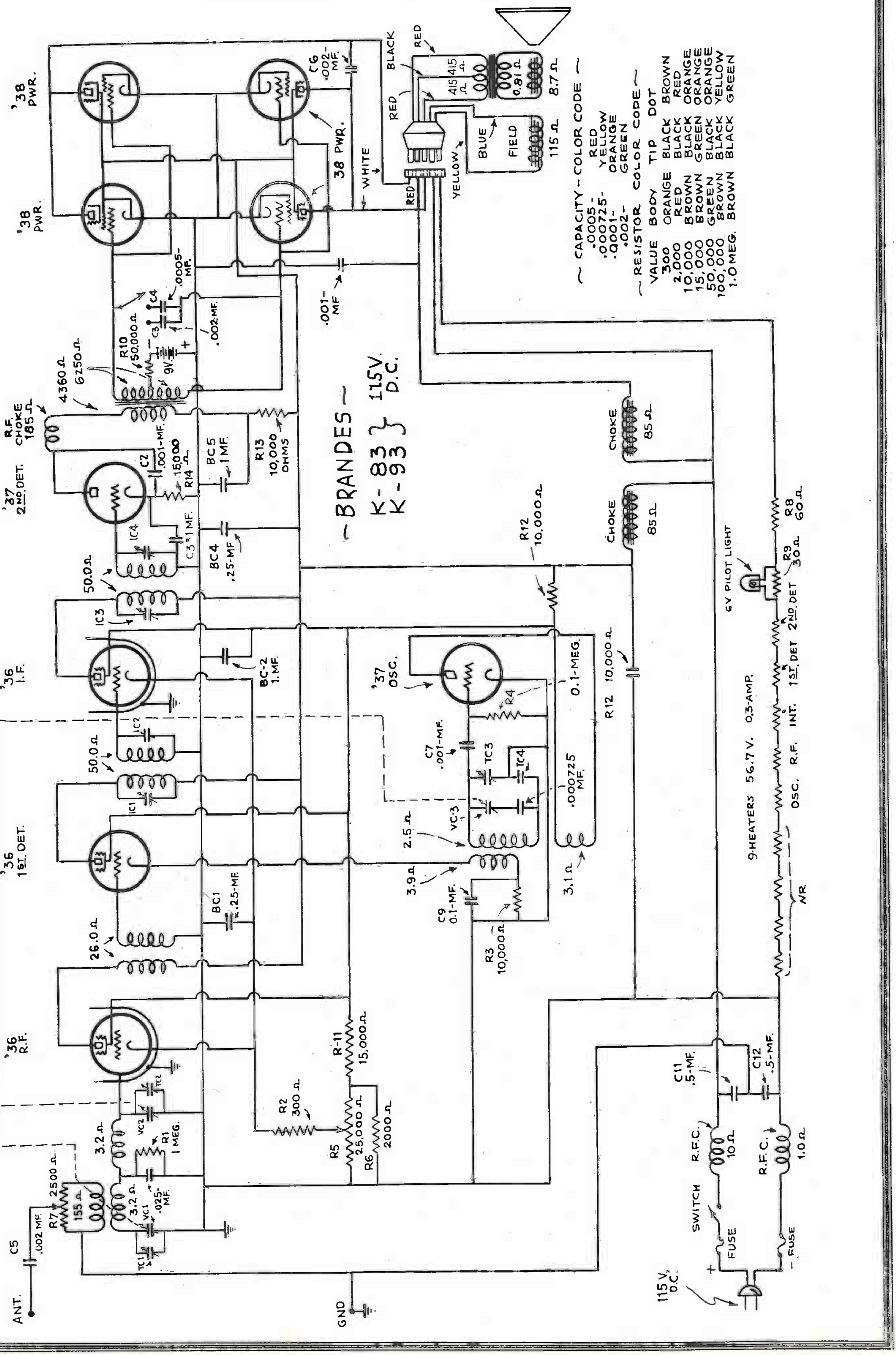

~ CAPACITY - COLOR CODE ~

.0005 -	RED
.000725 -	YELLOW
.0001 -	ORANGE
.002 -	GREEN

~ RESISTOR COLOR CODE ~

VALUE	BODY	TIP	DOT
300	ORANGE	BLACK	BROWN
2,000	RED	BLACK	RED
10,000	BROWN	BLACK	ORANGE
15,000	BROWN	GREEN	ORANGE
50,000	GREEN	BLACK	ORANGE
100,000	BROWN	BLACK	YELLOW
1.0 MEG.	BROWN	BLACK	GREEN

LANG RADIO CO.

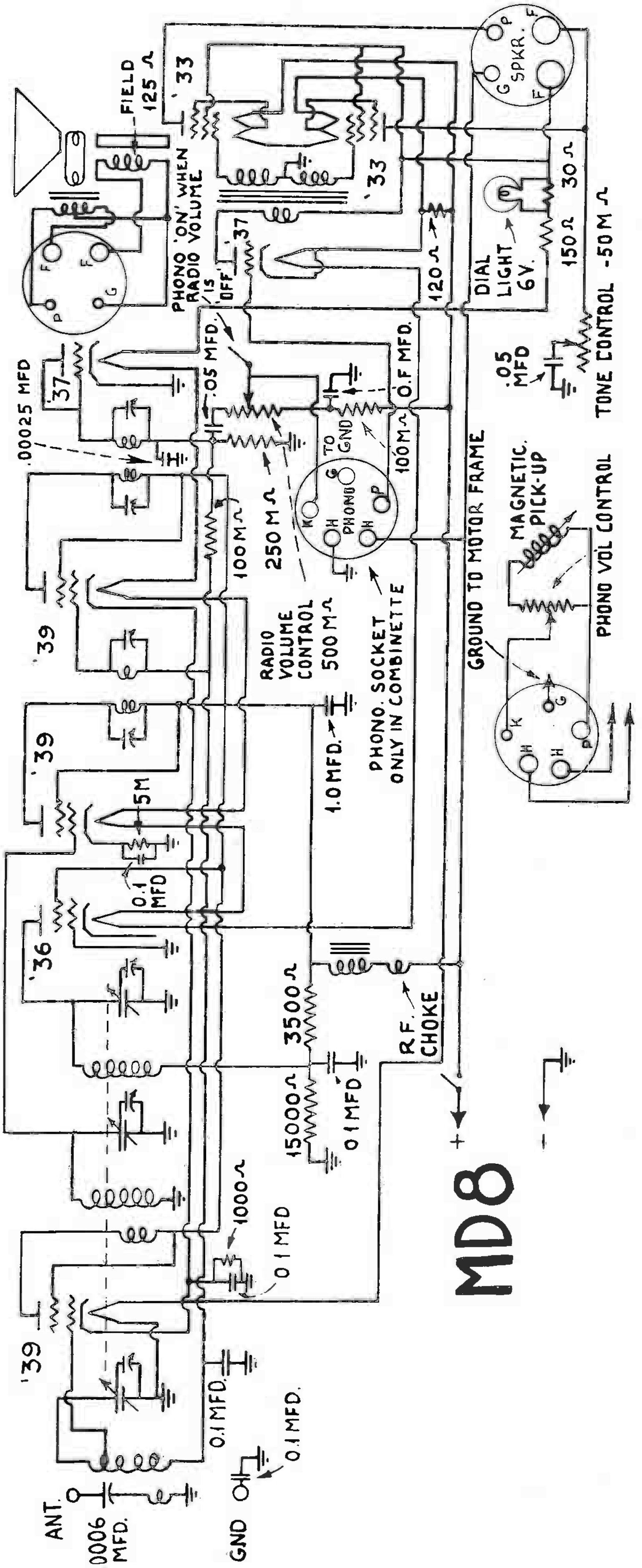

MD8

BD5

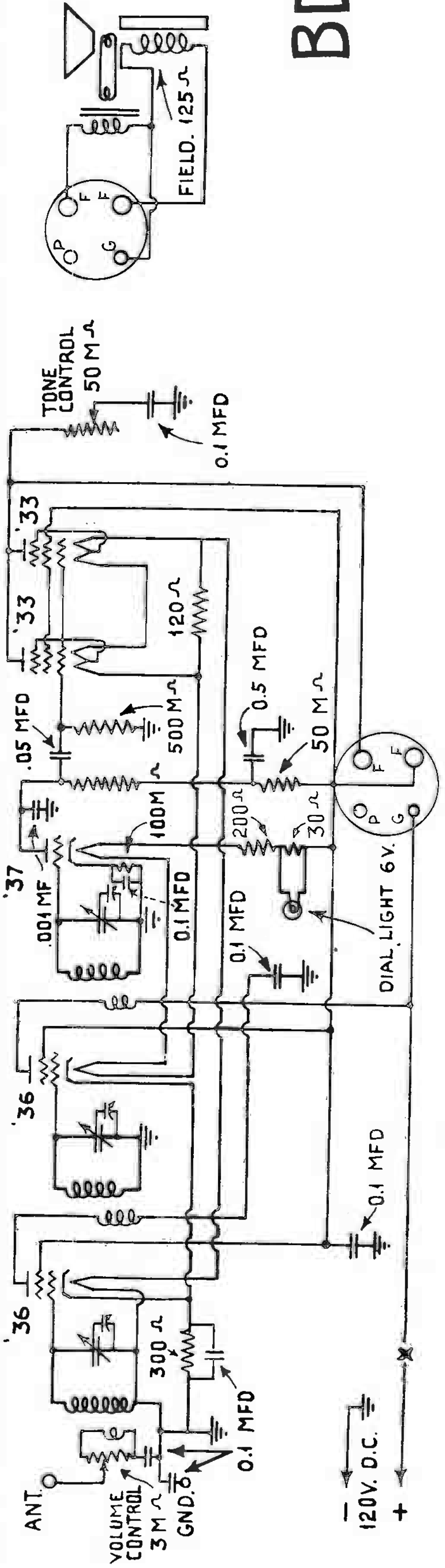

LANG RADIO CO.

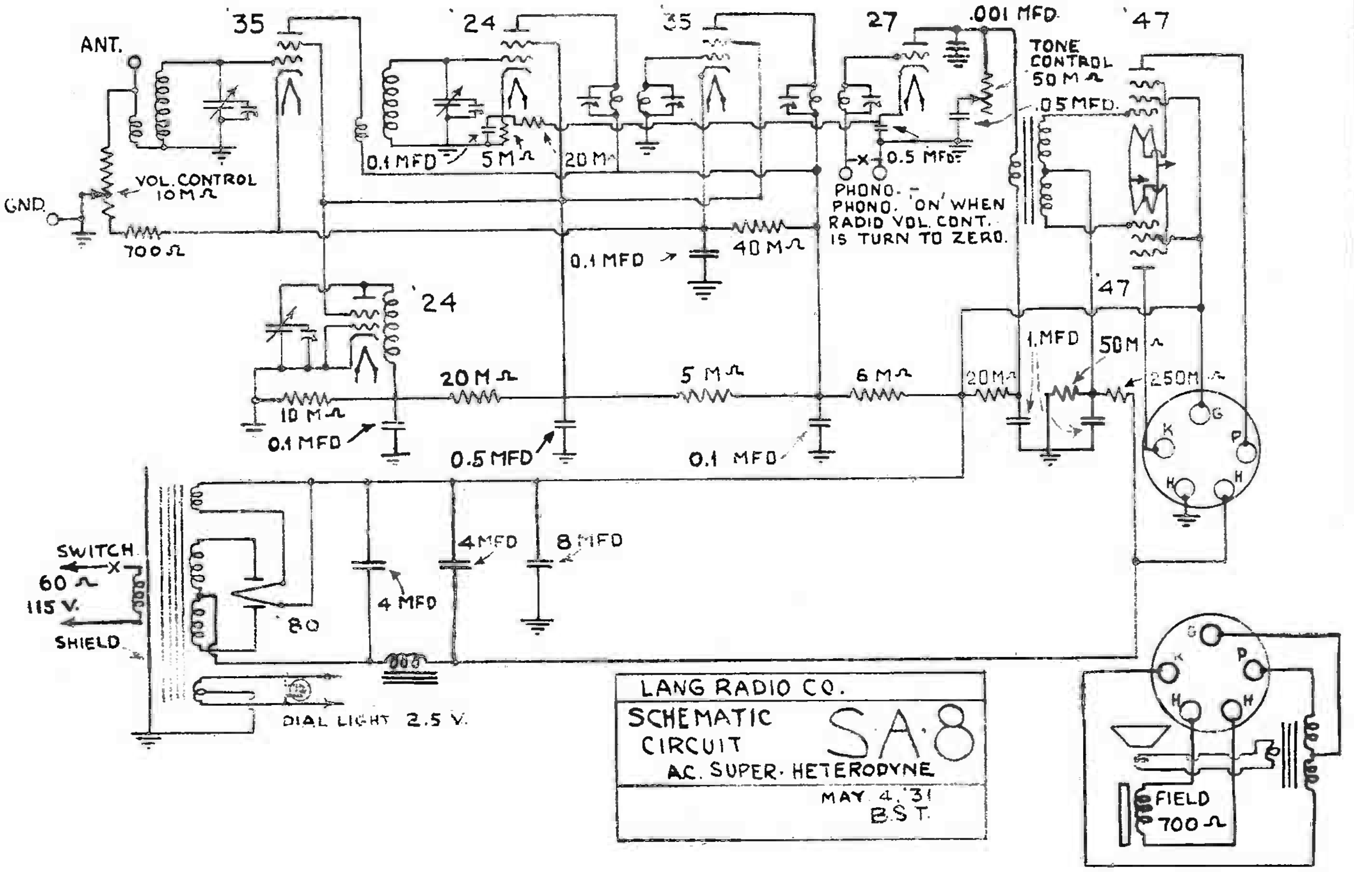

LANG RADIO CO.
SCHEMATIC CIRCUIT SA·8
A.C. SUPER-HETERODYNE
MAY 4, '31
B.S.T.

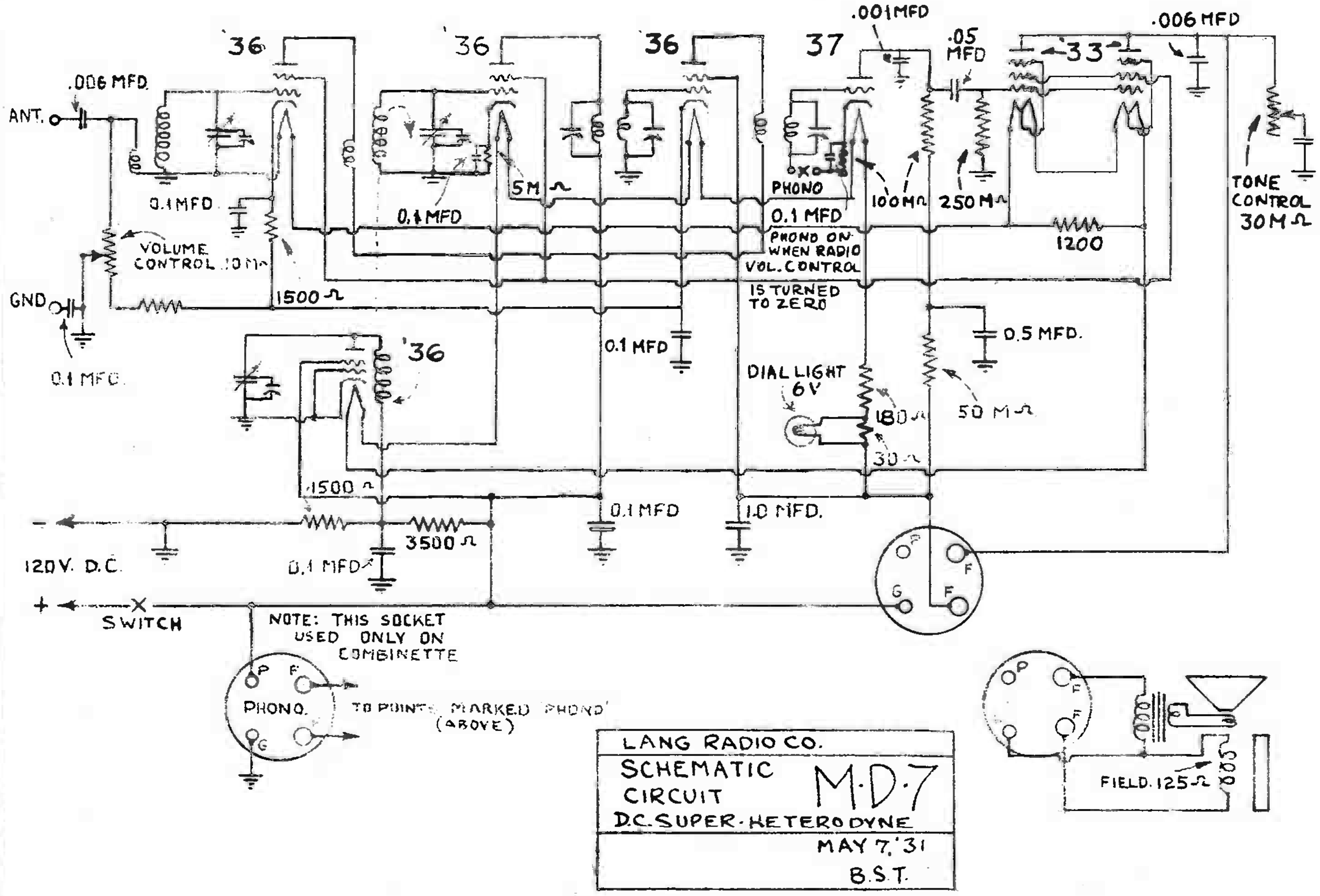

LANG RADIO CO.
SCHEMATIC CIRCUIT M·D·7
D.C. SUPER-HETERODYNE
MAY 7, '31
B.S.T.

LANG RADIO CO.

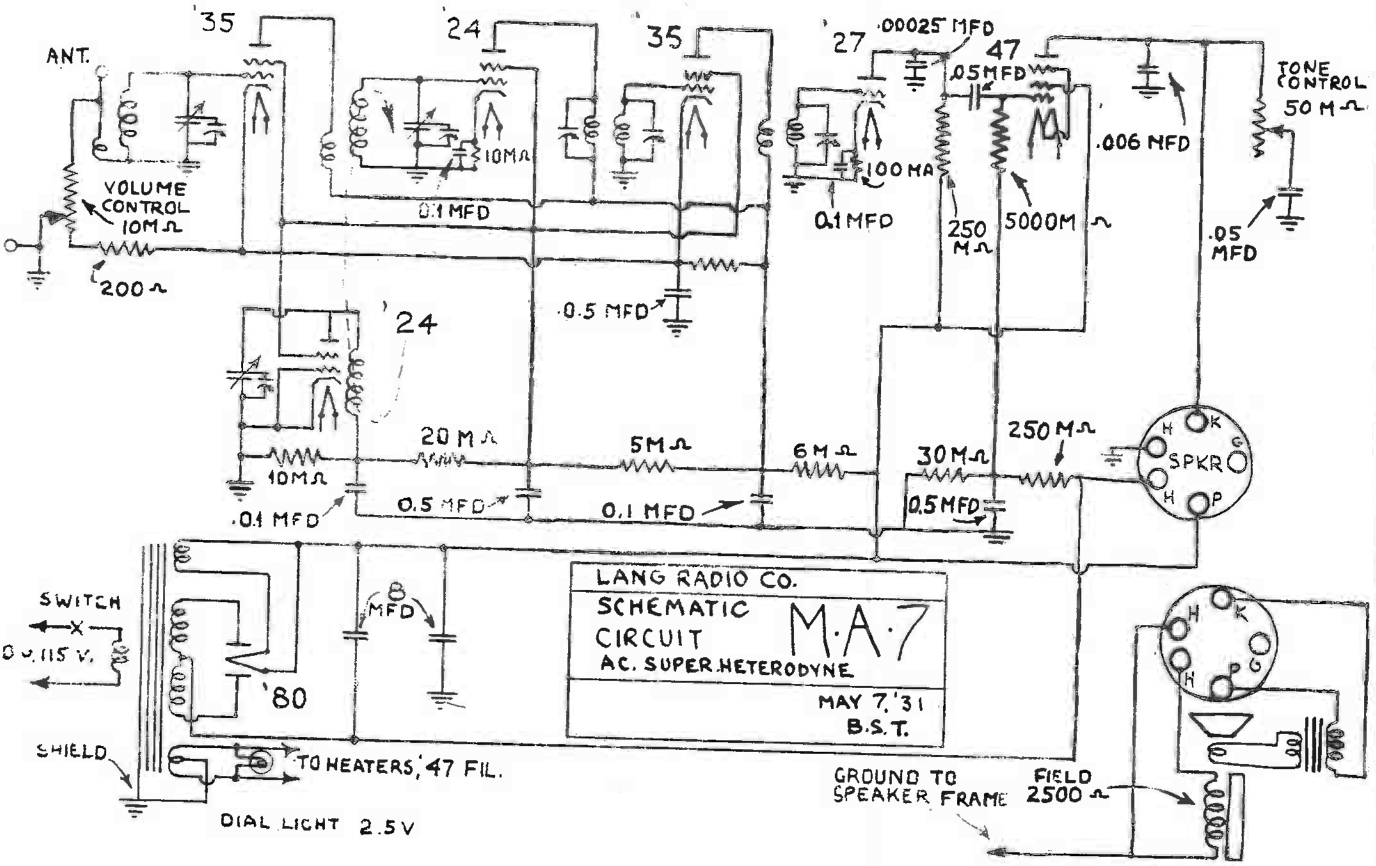

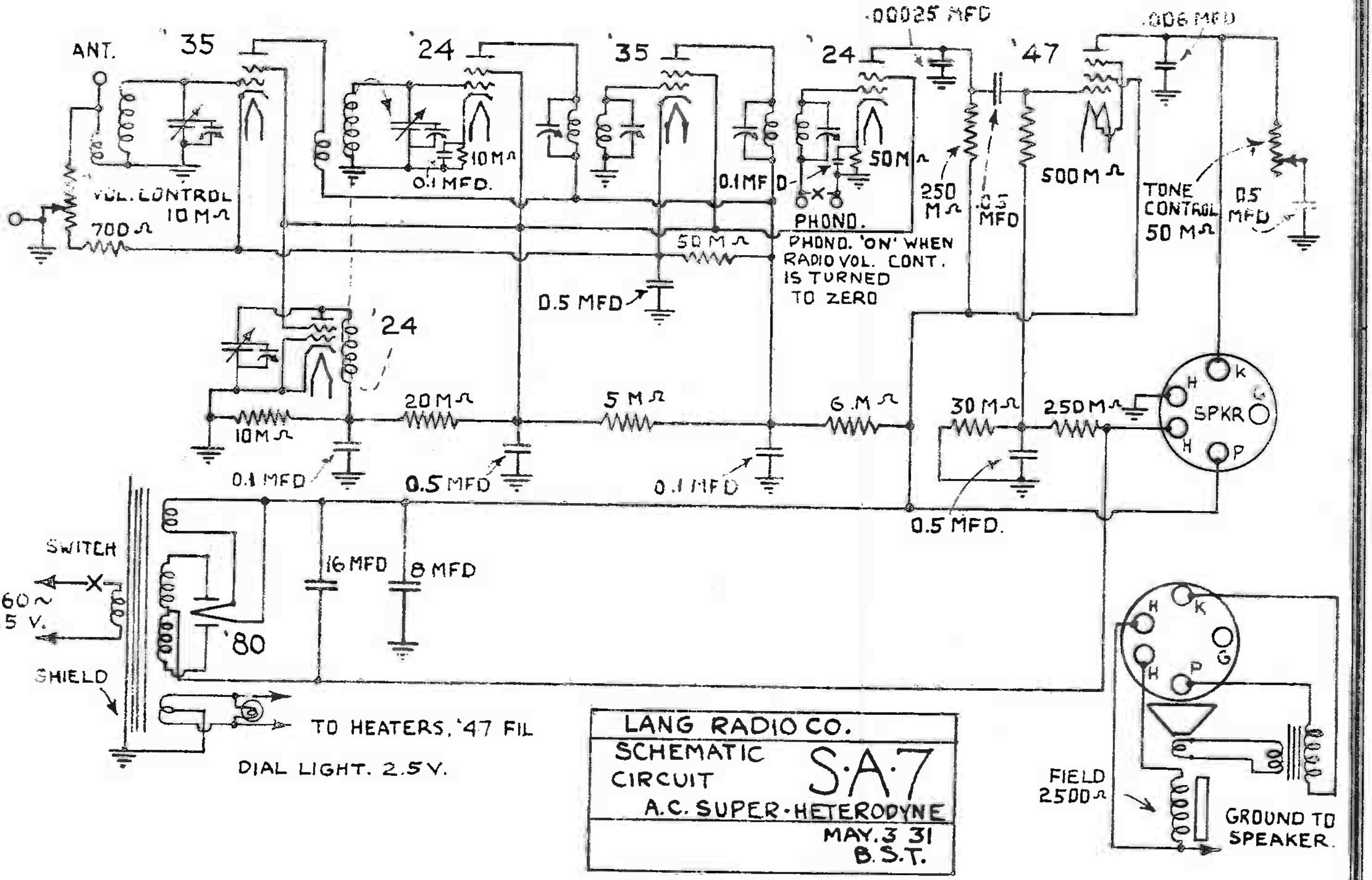

LINCOLN RADIO CORP.

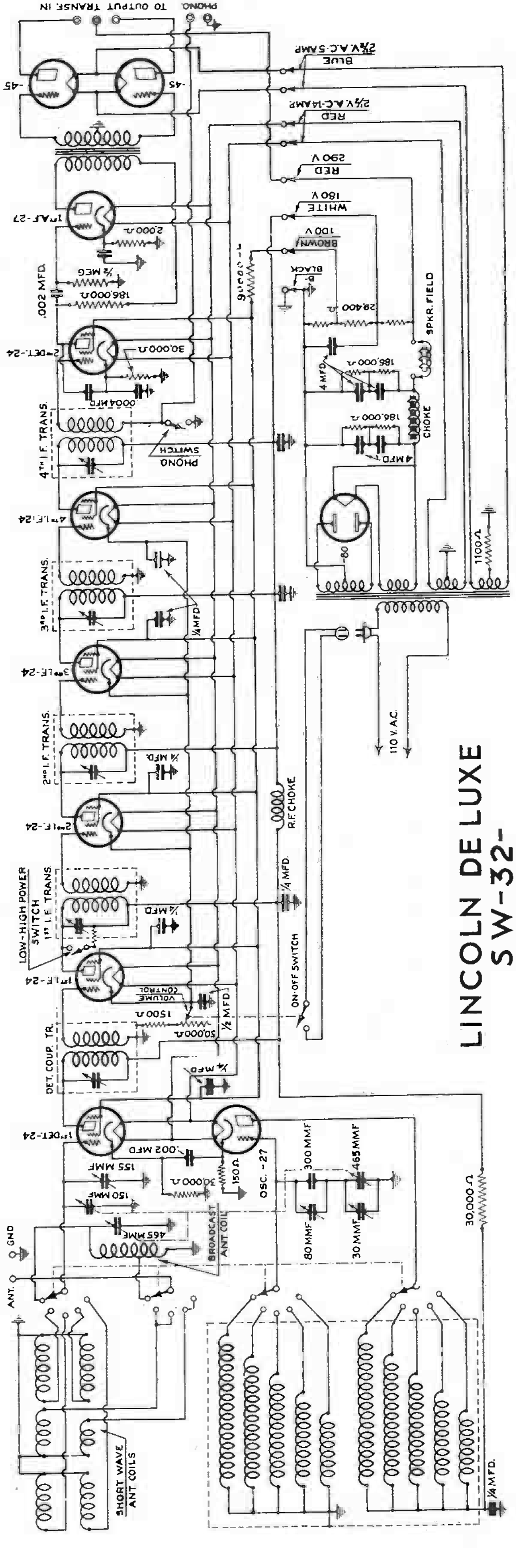

LINCOLN DE LUXE
SW-32-

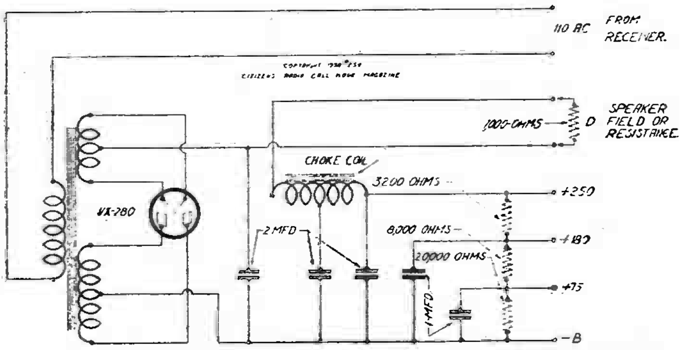

The power supply used with the Lincoln DeLuxe 10 is here diagrammed schematically.

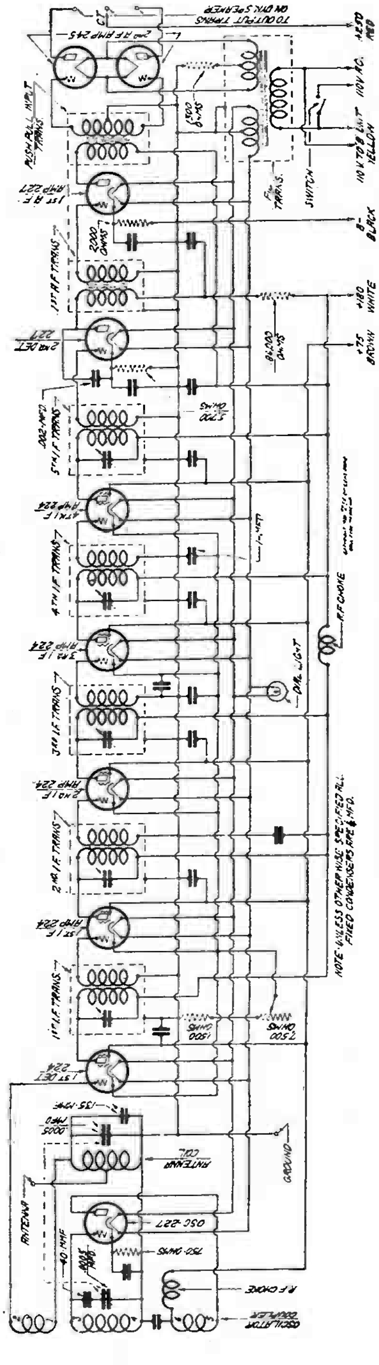

Schematic diagram of the Lincoln DeLuxe 10.

MONTGOMERY WARD & CO.

7 Tube—60 Cycle, Models 11 and 12

(Catalogue No. 62-29)

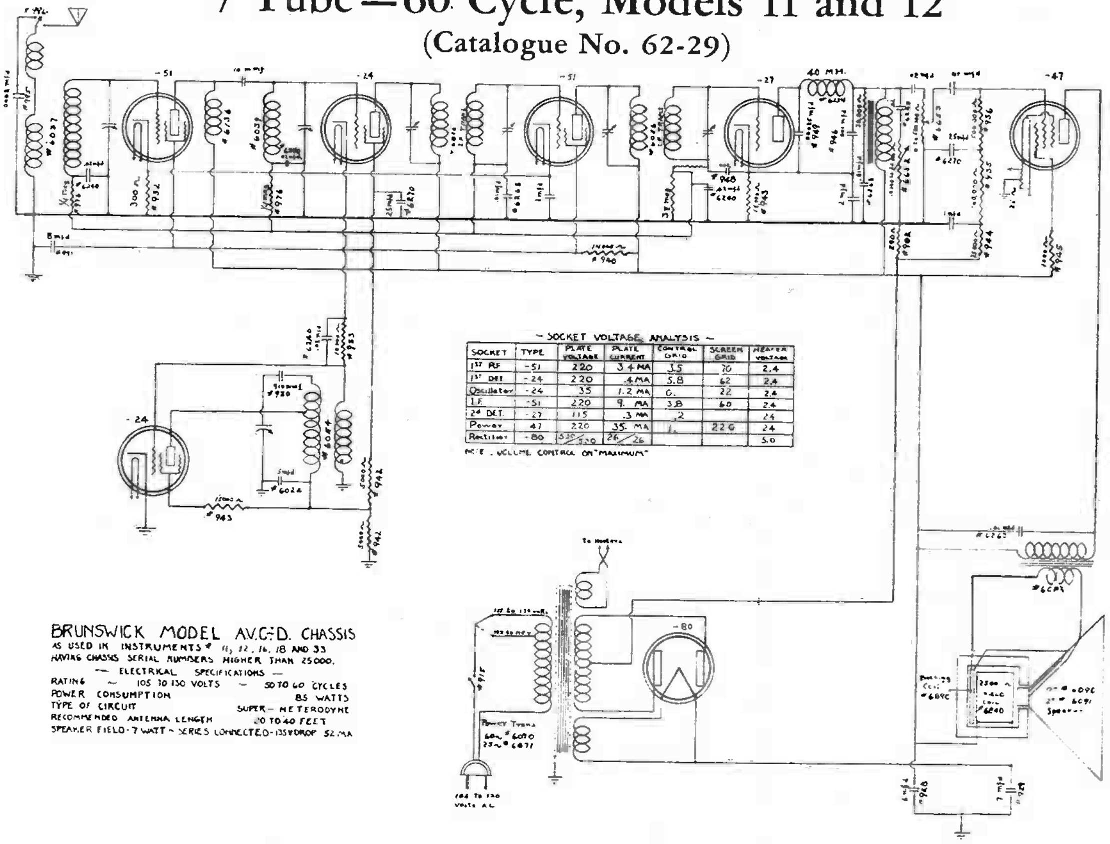

– SOCKET VOLTAGE ANALYSIS –

SOCKET	TYPE	PLATE VOLTAGE	PLATE CURRENT	CONTROL GRID	SCREEN GRID	HEATER VOLTAGE
1ST RF	-51	220	3.4 MA	3.5	70	2.4
1ST DET	-24	220	.4 MA	5.8	62	2.4
Oscillator	-24	35	1.2 MA	0.	22	2.4
I.F.	-51	220	9. MA	3.8	60	2.4
2d DET.	-27	115	.3 MA	.2		24
Power	47	220	35. MA	1.	220	24
Rectifier	-80	530/520	26/26			5.0

NOTE. VOLUME CONTROL ON "MAXIMUM"

BRUNSWICK MODEL AV.C-D. CHASSIS
AS USED IN INSTRUMENTS # 11, 12, 16, 18 AND 33
HAVING CHASSIS SERIAL NUMBERS HIGHER THAN 25000.

— ELECTRICAL SPECIFICATIONS —

RATING ~ 105 TO 130 VOLTS ~ 50 TO 60 CYCLES
POWER CONSUMPTION 85 WATTS
TYPE OF CIRCUIT SUPER-HETERODYNE
RECOMMENDED ANTENNA LENGTH 20 TO 40 FEET
SPEAKER FIELD-7 WATT ~ SERIES CONNECTED-135V DROP 52 MA

General Description for Brunswick 7-Tube Super-Heterodyne

This receiver is a seven tube super heterodyne consisting of one stage of radio frequency amplification, using a 235 tube; first detector or mixer using a *224* tube; a *224* oscillator; a 235 in the intermediate stage; a *227* is used as a second detector and automatic volume control tube; and a single stage of audio using a 247 power tube. The intermediate frequency is adjusted to 175 KC. An antenna of twenty to forty feet is recommended for use with this receiver.

AUTOMATIC VOLUME CONTROL

The *227* in this chassis functions both as a second detector and AVC tube. The action of this tube depends upon the increase in the detector plate current when a signal of sufficient intensity is impressed upon the grid. This increase in plate current increases the detector C bias as well as the C bias of the RF and IF tubes, thereby tending to equalize any signals received by the second detector. The manual volume control consists of a 500,000 Ohm variable resistance (No. 6653) controlling the audio frequency input to the grid of the 47 pentode.

ADJUSTMENT FOR LINE VOLTAGE

This receiver is originally wired for operation on a line voltage of 115 to 130 Volts, and this wiring should not be changed unless the receiver will not operate satisfactorily, and the line voltage is known to be from 90 to 115 Volts. In case of low line voltage, remove the chassis from the cabinet. On the base of the *280* socket you will find a black lead from the filament switch connected to a soldering lug, and also a black wire leading from this soldering lug into the power transformer. Unsolder the switch lead from this lug and solder it to the adjacent soldering lug having a black wire leading into the power transformer. These two leads going into the power transformer are tapped for 115-130 Volts and 105-115 Volts respectively.

ADJUSTMENT OF THE TUNING SCALE

In the event the Kilocycle readings of the tuning scale do not agree with the frequency of the stations received, tune in a local station, preferably one operating between 800 and 1200 KC being careful to tune this station exactly to resonance. The position of the pointer should then be aligned to agree with the frequency of the station, by loosening the two screws holding the station selector scale, and moving the scale to the right or left as required. In extreme cases it may be necessary to bend the support arm or bracket which fastens to the right side of the diffusion screen, slightly.

SERVICING

This receiver is subject to many of the troubles already explained in some of our service manuals, such as failure of the oscillator tube to oscillate properly, poor tone quality and faulty AVC action caused by a defective *227* tube, etc. Other causes of trouble are given below:

Hum

In the majority of cases where hum is encountered, it may be traced directly to a gassy or otherwise defective detector tube. It is good practice to try each of the type 24 tubes in the detector socket, using the one which gives least hum. Also try a new pentode tube.

More serious causes of hum are:

1. Open electrolytic condenser No. 929, or open circuit in condenser leads. (Violent hum.)
2. Open electrolytic condenser No. 928, or open circuit in leads. (Hum and oscillation when tuning.)
3. Open in by pass condenser (or leads) between control grid circuit and ground.
4. Grounded pilot light, filament winding of power transformer, or filament center-tap resistor.
5. Short circuit in speaker field coil.
6. Grounded screen grid circuit of pentode or plate circuit

MONTGOMERY WARD & CO.

of other tubes. (Signal also weak.)
7. Open screen-grid, plate or cathode by-pass condenser.

Noisy Reception

Owing to the extreme sensitivity of these receivers, interference may be encountered in some localities. This noise "level" or volume varies with location and weather conditions and will naturally be present in any similar sensitive receiver. The noise in many cases originates locally, and by means of a few preventive measures can be substantially reduced. The effective placing of one of our number 5166 or 5167 interference eliminators, across the line leading to small motors and electrical appliances about the home, will usually reduce the noise and improve reception. A shielded antenna lead-in and independent ground connection, consisting of a metal rod driven four or five feet into the ground, will also help remove or reduce the noise level.

No Signal

1. Antenna circuit shorted to chassis or ground.
2. Defective type 80 tube.
3. Short in circuit of electrolytic condenser No. 928. (No plate voltages on tubes but voltage on speaker field coil.)
4. Short in circuit of electrolytic condenser No. 929. (No plate voltages on tubes nor on speaker field coil.)
5. Open in plate circuit of pentode; output transformer primary or plate lead thru speaker cable (green and black leads). (This condition is indicated when screen grid of pentode becomes red hot.)
6. Open speaker field coil or field cable (red and green wires). (No plate voltages.)
7. Open circuit in output transformer secondary, voice coil, or bucking coil. (All voltage O. K.)
8. Plate circuit grounded. (No reception but slight hum noticeable.)
9. Screen grid circuit grounded or screen grid by pass condenser shorted.
10. Shorted oscillator coil (all voltages appear O. K.).

Weak Signals

1. Obviously, the first things to check are the tubes and the antenna and ground.
2. Open or shorted antenna loading coil or primary of R. F. Transformer.
3. Ground screen grid circuit of pentode or plate circuit of other tubes.
4. Condensers out of alignment—do not attempt to re-align condensers until the receiver has been thoroughly checked for open and short circuits or other possible causes of weak signals.

Intermittent Signal

Intermittent signals are usually due to a poor connection but may also be caused by a defective tube in the oscillator socket. In such cases the low frequency stations are particularly affected.

Distortion

1. Defective tubes.
2. Outside interference caused by old receivers of the regenerative type.
3. Improper voltages on tubes.
4. No grid bias voltage on pentode. (Set overloads readily.)

Oscillation

1. Open by pass condenser in R. F. circuits or electrolytic condenser No. 928.
2. Shielding making poor contact to chassis.
3. Improper voltages on tubes.

Broad Tuning

1. High resistance contacts in R. F. tuned circuits or soldered joints.
2. Low emission tubes.
3. Condensers out of alignment.
4. Aerial too long.

Microphonic Noises

In order to safeguard against microphonic trouble, the chassis and turret condenser have been mounted on rubber. If a tendency toward microphonic howling is encountered, be sure that the wooden packing strips have been removed from under the chassis and that the four chassis mounting screws are reasonably loose. Next see that each tube in the set has no tendency to be microphonic by tapping each tube and replacing the ones that seem microphonic.

METHOD OF ALIGNING R.F. CIRCUITS

The trimmer condensers on the turret type tuning condenser have been adjusted at the factory with greater precision than is usually possible in the field, and it is recommended that no attempt be made to change this adjustment until other tests have definitely indicated that the poor sensitivity and selectivity, indicative of misalignment, are not caused by other defects.

In the event the antenna and first detector tuned circuits are out of alignment, they may be adjusted with the aid of a weak high frequency (1300 to 1500 K. C.) signal—produced by a distant station or a local test oscillator. Tune this signal in very carefully for maximum volume, or better still, if one is available, for maximum deflection on an output meter. Adjust the antenna tuned circuit adjustment screw (located near the type 47 tube on the top plate of the turret condenser) for maximum volume or for maximum deflection on an output meter. Then, without changing the position of the tuning knob, adjust the first detector adjustment screw—located adjacent to the A. C. switch—for maximum volume or maximum deflection on an output meter. Before tightening the lock unit on each adjustment screw, go over the adjustments a second time to secure the greatest possible accuracy. A drop of ambroid glue or collodian should be placed on each adjustment screw after the lock nut has been tightened to prevent handling and speaker vibrations from changing the adjustment.

In most cases it will be unnecessary to touch the oscillator adjustment screw (located between the antenna and first detector adjustment screws). If this adjustment is necessary it is recommended that the intermediate frequency transformer circuits be tuned first (see following paragraph). Then tune oscillator circuit, employing same method as explained above for antenna tuned circuit and first detector circuit. In the event any circuit does not tune properly, check the circuit thoroughly for open and short circuits. If the trouble cannot be located, the coil should be replaced with a new one.

METHOD OF ALIGNING I.F. TRANSFORMERS

In the event the receiver is still insensitive and lacks proper selectivity after making the foregoing adjustments, the intermediate frequency transformers should be adjusted by one of the following methods:

1. Tuning Intermediate Transformers with 175 K.C. Oscillator

By far the best method of aligning the tuned circuits in the intermediate frequency transformers is to employ a 175 K.C. oscillator and output meter. In making this test, remove the oscillator tube and connect the output of the oscillator to the grid cap of the first detector. Usually it will not be necesary to remove the grid cap from the tube, this depending on the strength of the oscillator and the amount the I.F. transformers are out of line. Connect the output meter across the primary of the output transformer located on the speaker (terminals 3 and 7 counting from left to right). The four I.F. adjustment screws on the I.F. transformers, located inside the chassis, should be adjusted with a non-metallic screw driver for maximum deflection on the output meter. Go over all four adjustments a second time to secure maximum accuracy.

2. Tuning Intermediate Transformers without 175 K.C. Oscillator

In the event a 175 K.C. oscillator is not available a fairly close adjustment may be made by tuning in a faint broadcast signal, and with the volume control turned on full, adjust the transformers for maximum volume with a non-metallic screw driver. After adjusting the I.F. transformers, the R.F. circuits should be realigned as explained before.

MONTGOMERY WARD & CO.

9 Tube—60 Cycle, Model 17

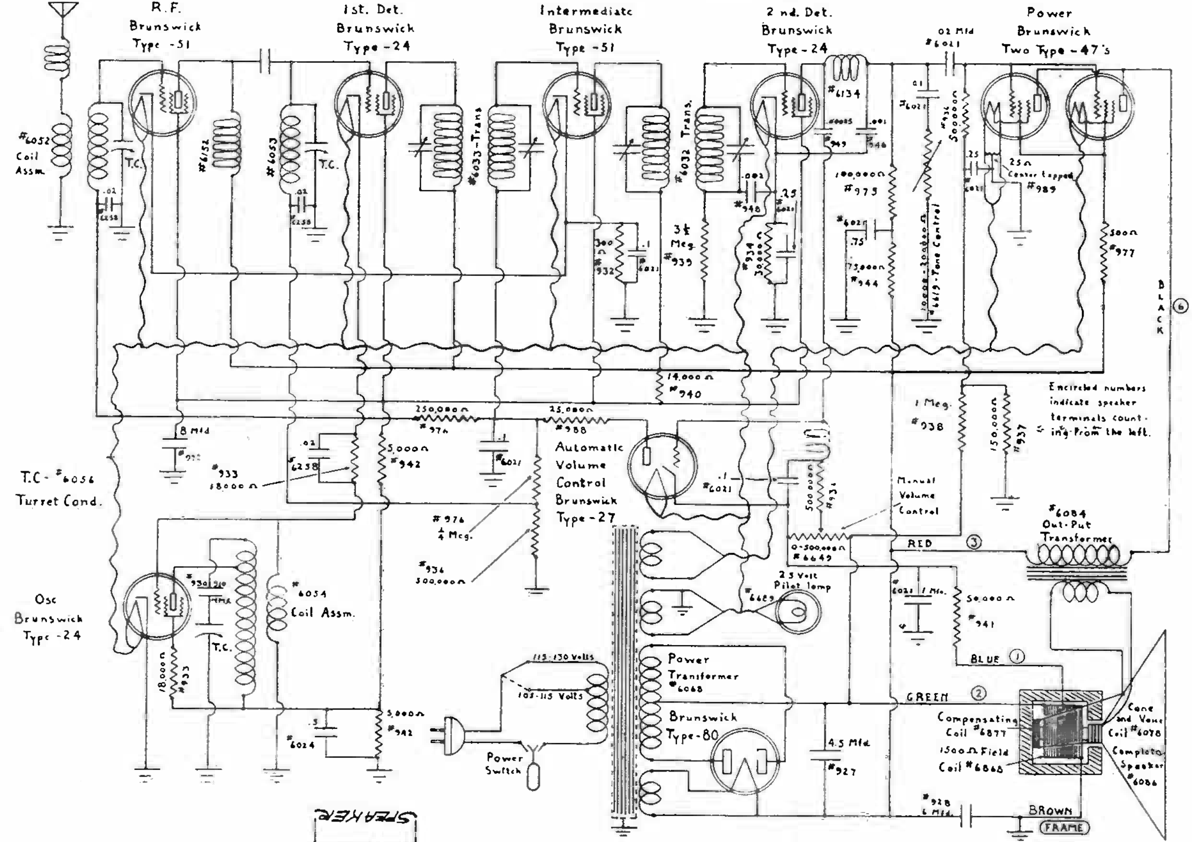

Steinite Chassis Model 22

Console Model Nos. (62-080) and (62-090) Midget No. (62-100)

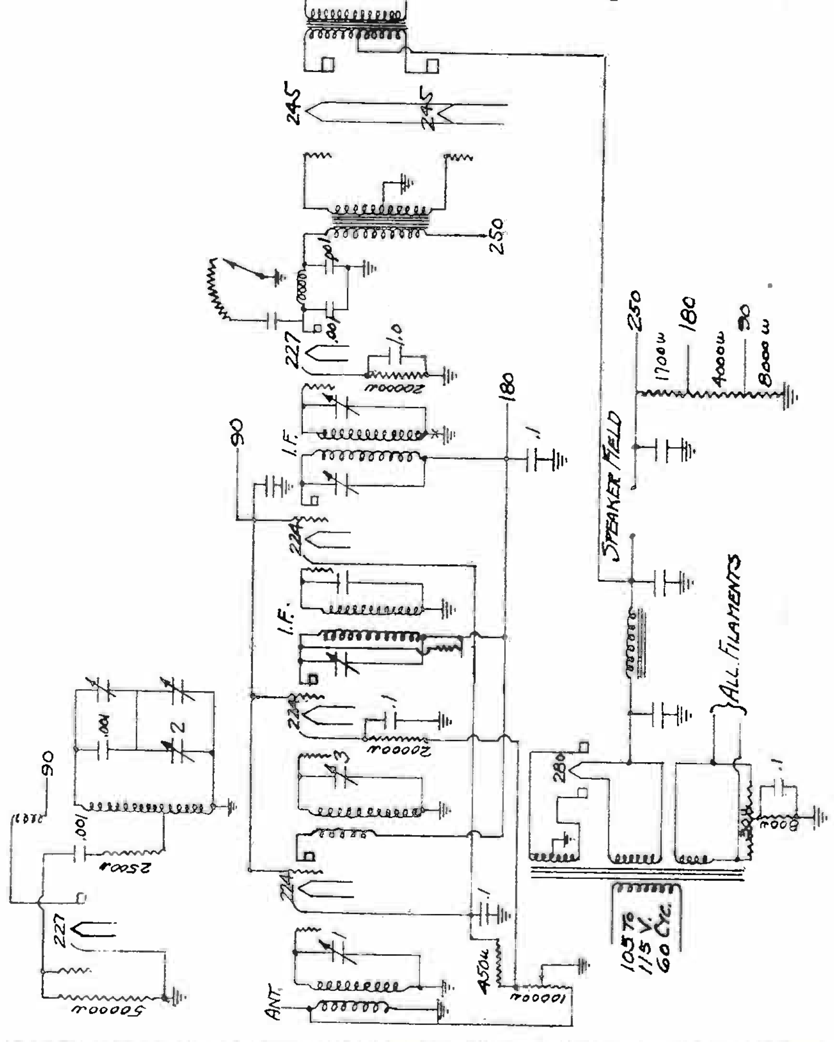

Voltage Chart

The following voltages should be obtained on a receiver operating normally on a line voltage of 110 volts, using a high resistance volt meter.

R.F. 1st Detector and I.F., plate to ground	180 volts
R.F. 1st Detector and I.F., screen to ground	90 "
R.F. and I.F., cathode to ground	4 "
1st Detector, cathode to ground	12 "
Oscillator, plate to ground	90 "
2nd Detector, plate to ground	200 "
2nd Detector, cathode to ground	22 "
'45 plate to filament	250 "
All filaments to ground	50 "
'45, '27 and '24 filaments	2.2 "
'80 filament	4.5 "

MONTGOMERY WARD & CO.

SCHEMATIC WIRING DIAGRAM SERIES 40-A 60 & 25 CYCLE

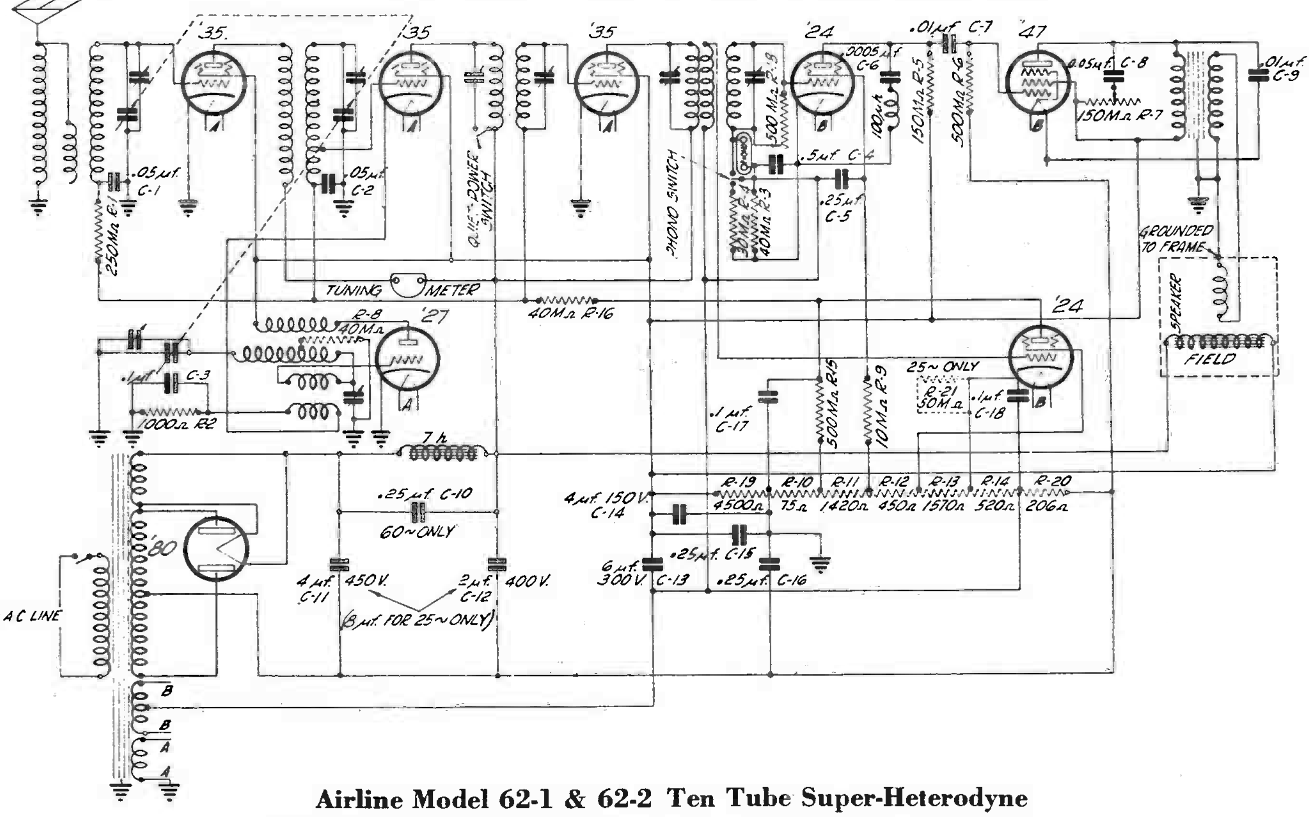

Airline Model 62-1 & 62-2 Ten Tube Super-Heterodyne

Supplier: Davison-Haynes Mfg. Co., Los Angeles, California

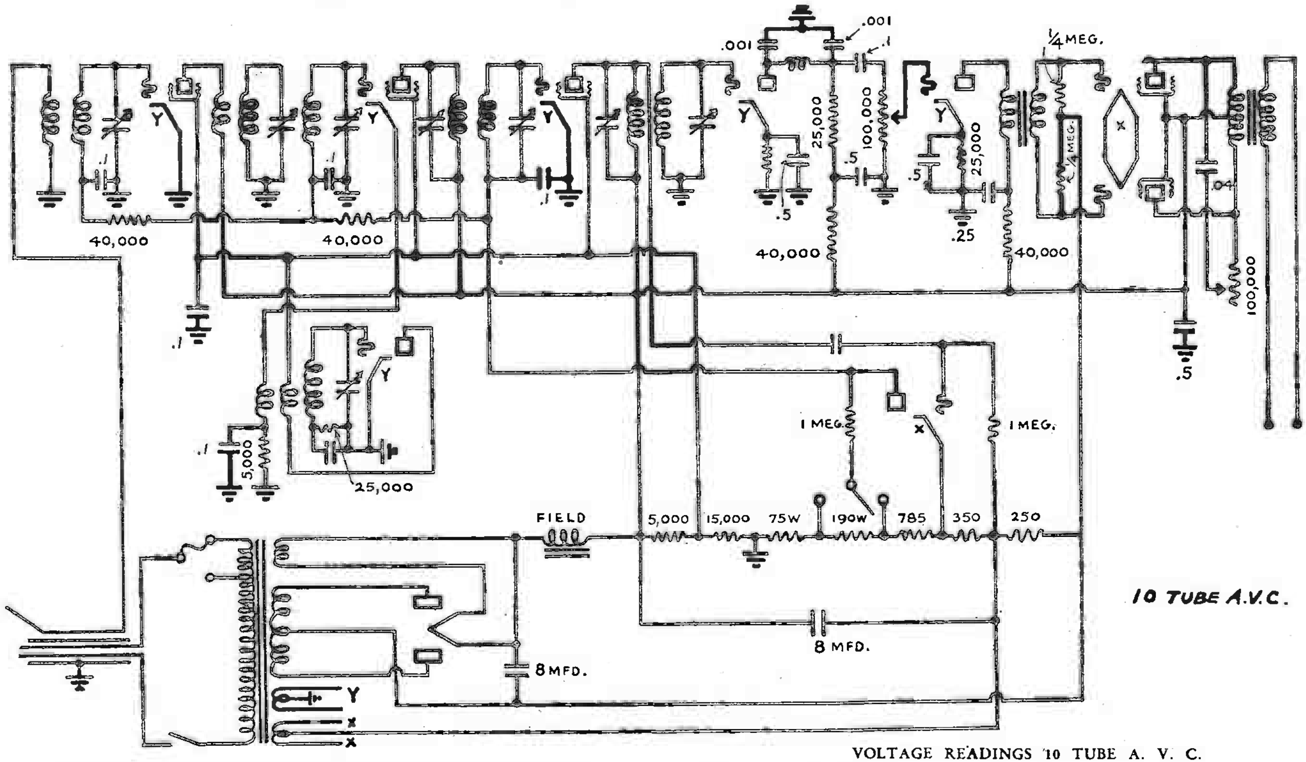

NINE TUBE AUTOMATIC VOLUME CONTROL MODEL 62-2

This receiver is identical with the ten tube receiver in all respects except the following:

A single pentode is used instead of push-pull. Due to the fact that the plate current is lower with the single tube, an extra 250 ohm resistor is added to the voltage divider to correct the bias on the power tube.

The detector plate resistor is 25,000 ohms instead of 250,000.

Voltages are higher throughout, as follows.

Ground to RF plates, 180.

Ground to RF screens and oscillator plate, 100.

Ground to second detector plate, 140.

Filament to plate, pentodes, 250.

VOLTAGE READINGS 10 TUBE A. V. C.

From ground to 280 filament	265
From ground to low side of field	165
From ground to 247 plates	155
From ground to 247 screens	165
From ground to RF plates	165
From ground to first detector plate	165
From ground to oscillator plate	85
From ground to second detector plate	60
From ground to RF screens	85
From ground to first detcetor cathode	6
From ground to second dector cathode	10
From ground to first AF plate	75
From ground to first AF cathode	5
Filament to plates of Pentodes	210

Across A. V. C. voltage divider, starting at grounded end, the following voltages should be read consecutive points: 3-10-40-57-75. The last section is pentode bias. (17-18v).

Heater voltage	2.25 AC
47 filament voltage	2.25 AC
280 filament voltage	4.7 AC

MONTGOMERY WARD & CO.

Chassis Model No. 51 *Source:* Transformer Corp. of America.

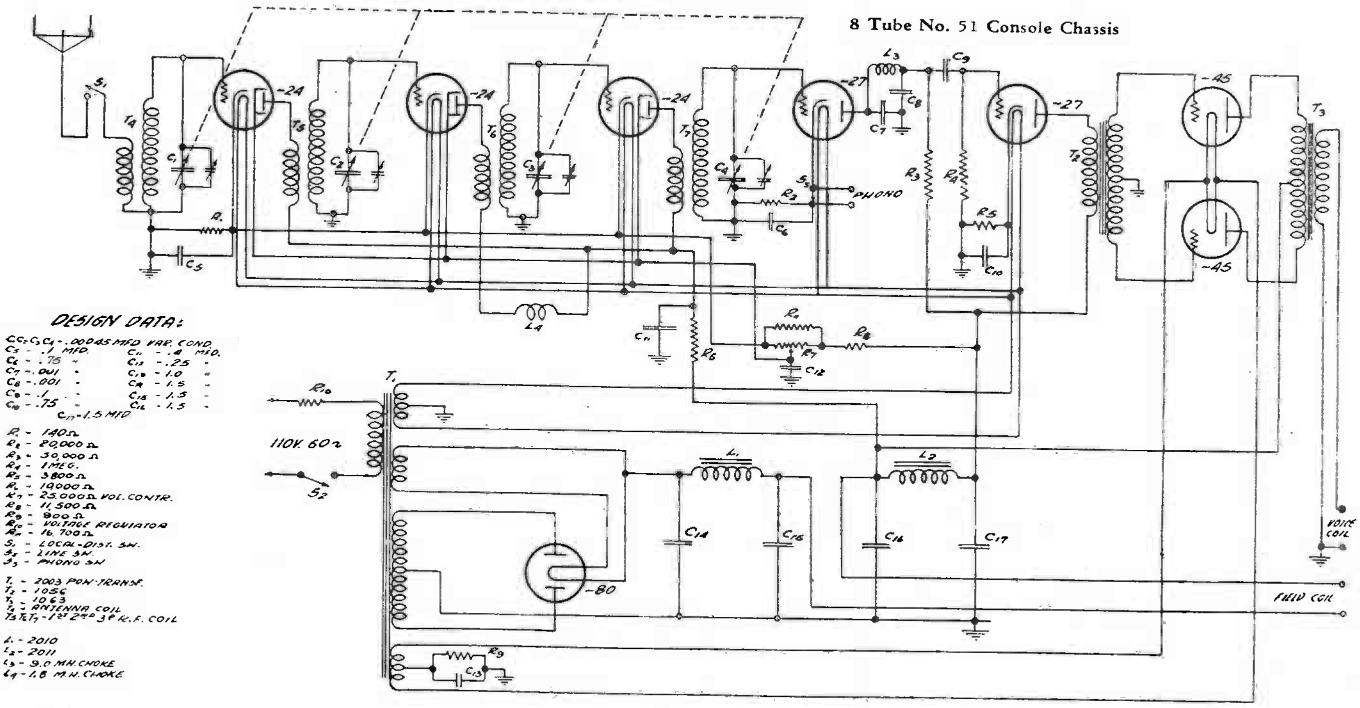

8 Tube No. 51 Console Chassis

DESIGN DATA:

C C2 C3 C4 - .00045 MFD VAR. COND.
C5 - .1 MFD.
C6 - .75 "
C7 - .001 "
C8 - .001 "
C9 - .1 "
C10 - .75 "
C11 - .4 MFD.
C12 - .25 "
C13 - 1.0 "
C14 - 1.5 "
C15 - 1.5 "
C16 - 1.5 "
C17 - 1.5 MFD

R1 - 140Ω
R2 - 20,000Ω
R3 - 30,000Ω
R4 - 1MEG.
R5 - 3800Ω
R6 - 10,000Ω
R7 - 25,000Ω VOL. CONTR.
R8 - 11,500Ω
R9 - 800Ω
R10 - VOLTAGE REGULATOR
R11 - 16,700Ω
S1 - LOCAL-DIST. SW.
S2 - LINE SW.
S3 - PHONO SW

T1 - 2003 POW. TRANSF.
T2 - 1056
T3 - 1063
T4 - ANTENNA COIL
T5 T6 T7 - 1ST 2ND 3D R.F. COIL

L1 - 2010
L2 - 2011
L3 - 9.0 MH. CHOKE
L4 - 1.8 M.H. CHOKE

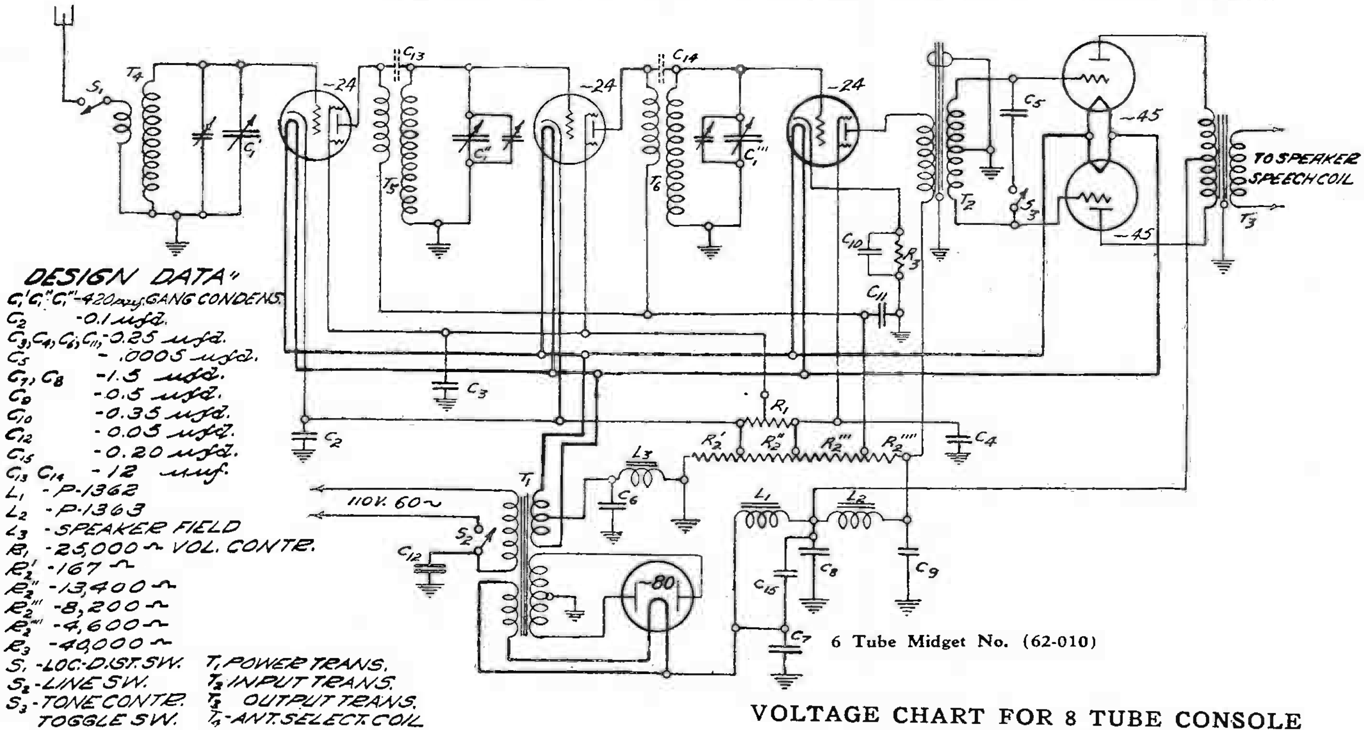

6 Tube Midget No. (62-010)

DESIGN DATA"

C1' C1" C1''' - 420 μμf. GANG CONDENS.
C2 - 0.1 μfd.
C3, C4, C6, C11, - 0.25 μfd.
C5 - .0005 μfd.
C7, C8 - 1.5 μfd.
C9 - 0.5 μfd.
C10 - 0.35 μfd.
C12 - 0.05 μfd.
C15 - 0.20 μfd.
C13 C14 - 12 μμf.
L1 - P-1362
L2 - P-1363
L3 - SPEAKER FIELD
R1 - 25,000 Ω VOL. CONTR.
R2' - 167 Ω
R2" - 13,400 Ω
R2''' - 8,200 Ω
R2'''' - 4,600 Ω
R3 - 40,000 Ω
S1 - LOC-DIST. SW.
S2 - LINE SW.
S3 - TONE CONTR. TOGGLE SW.
T1 POWER TRANS.
T2 INPUT TRANS.
T3 OUTPUT TRANS.
T4 - ANT. SELECT. COIL
T5 - T6 - R.F. COILS

VOLTAGE CHART FOR 6 TUBE MIDGET No. (62-010)

No.	Stage	Type Tube	A Volts	B Volts	Cont. Grid Volts	Cath. Volts	Ip' Norm.	Ip" G. D.	Ip"-Ip' (Diff.)	SG Volts
1	1st r. f.	'24	2.05	165	2.6	44	2.1	3.6	1.5	76
2	2nd r. f.	'24	2.05	165	2.6	44	2.3	3.8	1.5	76
3	Det.	'24	2.06	196	*7.0	*26	*0.2	*1.3	*1.1	*70
4	AF	'45	2.15	230	45.0		28.	32.	4.0	
5	AF	'45	2.15	230	45.0		25.	29.	4.0	
6	Rect.	'80	4.6							

Line Voltage 105 60 Cycle Volume 60 Control Position Full

VOLTAGE CHART FOR 8 TUBE CONSOLE No. (62-020) CHASSIS MODEL No. 51

Tube Order	Tube Type	Stage in Set	Reading, Plug in Socket of Set, Tube in Tester							
			A	B	C					
			Volts	Volts	Volts Cont. Grid	Cathode Heater Volts	Normal Plate M. A.	Plate M. A. Grid Test	Plate Charge M. A.	Screen Grid Volts
1	2	3	6	7	8	9	10	11	12	13
1	224	1 R. F.	2.09	146	2.43	2.43	2.72	5.55	2.82	87.5
2	224	2 R. F.	2.09	151	2.43	2.43	2.55	5.65	3.11	85.5
3	224	3 R. F.	2.09	151	2.43	2.43	2.72	5.8	2.92	87.5
4	227	Det.	2.09	134	12.2	13.15	.58	.78	.194	
5	227	1 A. F.	2.14	170	1.22	13.6	3.31	4.08	.78	
6	245	2 A. F.	2.14	195	37.5		20.4	24.3	3.9	
7	245	2 A. F.	2.14	195	37.5		23.4	27.2	3.9	
8	280	Rect.	4.51				35.*			

MONTGOMERY WARD & CO.

Airline Model 62-7 and 62-8 Inclusive

Supplier: **Davison-Haynes Mfg. Co., Los Angeles, California**

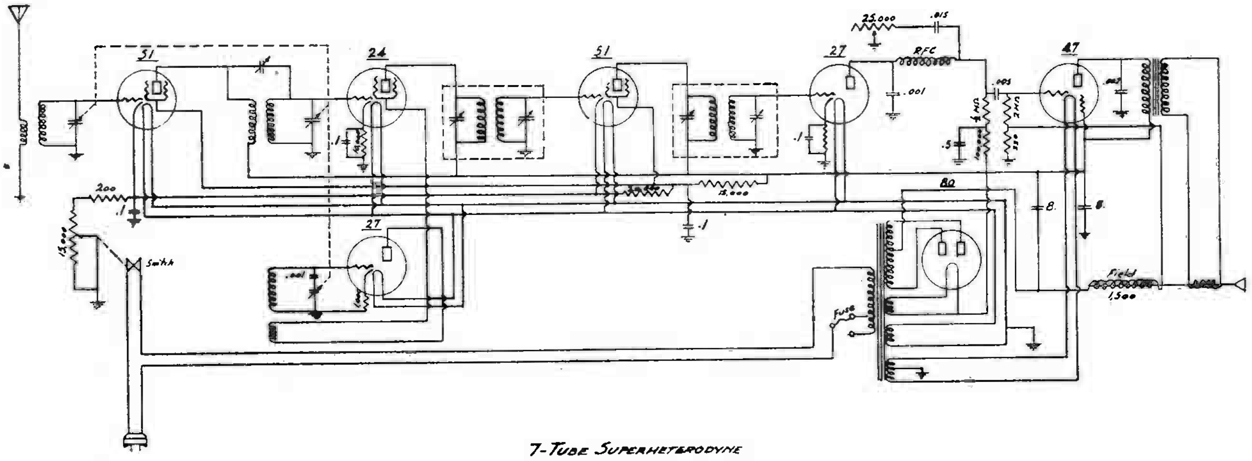

7-Tube Superheterodyne

GENERAL DESCRIPTION

The circuit of this receiver is a super-heterodyne employing one stage of signal frequency amplification using a variable-mu tube, a first detector, or mixer tube, using a No. 224 tube; oscillator, which is a No. 227; one stage of intermediate frequency amplification operating at 175 KC and using a variable-mu tube, a No. 227 detector resistance coupled to a single pentode power tube.

The signal frequency RF stage is impedance coupled to the first detector for constant high gain over the broadcast band. The oscillator is inductively coupled to the first detector and is designed to maintain constant voltage at the grid of this tube at all frequencies. The I. F. amplifier is designed to give as nearly as possible a flat top response with a band width of ten KC at a signal interference ratio of 1000 to 1. The coils in the I. F. transformers, therefore are adjusted to approximately critical coupling, and in aligning the I. F. tuned circuits it is unnecessary to stagger the condensers to produce the desirable flat top tuning curve.

TERMINAL VOLTAGES

Ground to high voltage (280 Filament)	225 Volts
Ground to Pentode plate	215 Volts
Ground to Pentode screen	225 Volts
Ground to RF plates	225 Volts
Across insulated filter Condenser	325 Volts
Ground to Detector plate	55 Volts
Ground to Second Detector Cathode	10 Volts
Ground to RF Screens	100 Volts
Ground to RF Cathodes	3.5 Volts
Across all heaters	2.2 AC
Across Pentode filament	2.2 AC
Across Rectifier filament	4.8 AC
Across field	90 Volts

Above readings made with 300 V. Scale Voltmeter, 1000 ohms per volt, with volume control at maximum, line voltage—110, 60 cycles.

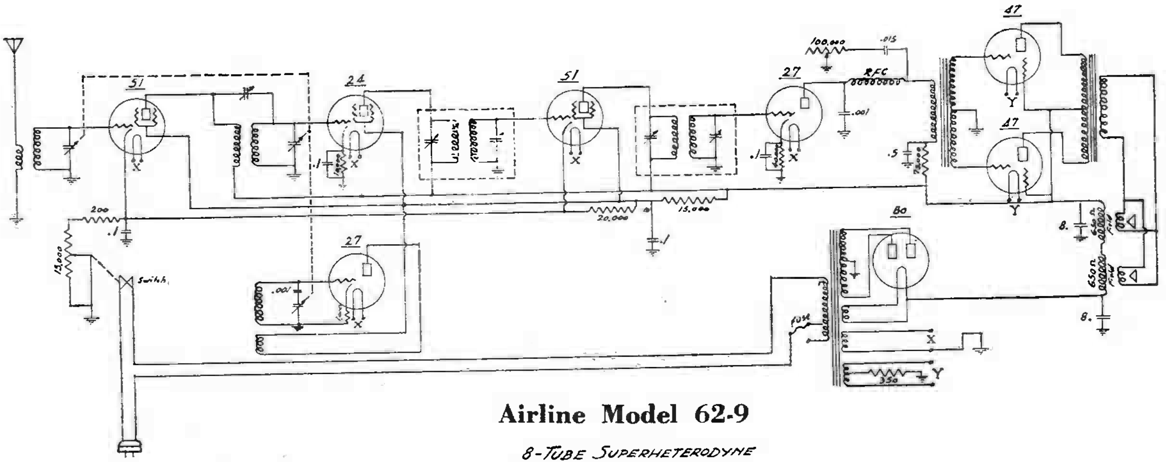

Airline Model 62-9

8-Tube Superheterodyne
Dual Speakers

GENERAL DESCRIPTION

The circuit of this receiver is a super-heterodyne employing one stage of signal frequency amplification using a variable-mu tube, a first detector, or mixer tube, using a 224 tube; oscillator, which is a 227; one stage of intermediate frequency amplification operating at 175 KC and using a variable-mu tube, a 227 detector transformer coupled to 247 pentodes in push-pull. The signal frequency RF stage is impedance coupled to the first detector for constant high gain over the broadcast band. The oscillator is inductively coupled to the first detector and is designed to maintain constant voltage at the grid of this tube at all frequencies. The I. F. amplifier is designed to give as nearly as possible a flat top response with a band width of ten kilocycles at a signal interference ratio of 1000 to 1. The coils in the I. F. transformers, therefore are adjusted to approximately critical coupling, and in aligning the I. F. tuned circuits it is unnecessary to stagger the condensers to produce the desirable flat top tuning curve.

TERMINAL VOLTAGES

Ground to high side of field (280 Filament)	370 Volts D.C.
Ground to Pentode plates	225 Volts D.C.
Ground to Pentode screens	250 Volts D.C.
Ground to RF plates	250 Volts D.C.
Ground to Detector Plate	155 Volts D.C.
Ground to Second Detector Cathode	20 Volts D.C.
Ground to RF Screens	100 Volts D.C.
Ground to RF Cathodes	4 Volts D.C.
Ground to Pentode Filaments	15.5 Volts D.C.
Across each field	35 Volts D.C.
Across all heaters	2.25 Volts AC.
Across Pentode filaments	2.25 Volts AC.
Across Rectifier Filament	4.6 Volts AC.

Above readings plus or minus ten per cent with fuse in 110 volt position and 110 volts on the line. Volume control at maximum. Make necessary compensation for deviation from these conditions.

MONTGOMERY WARD & CO.

EIGHT TUBE DUAL SPEAKER WASHINGTON MODEL No. 62-34.

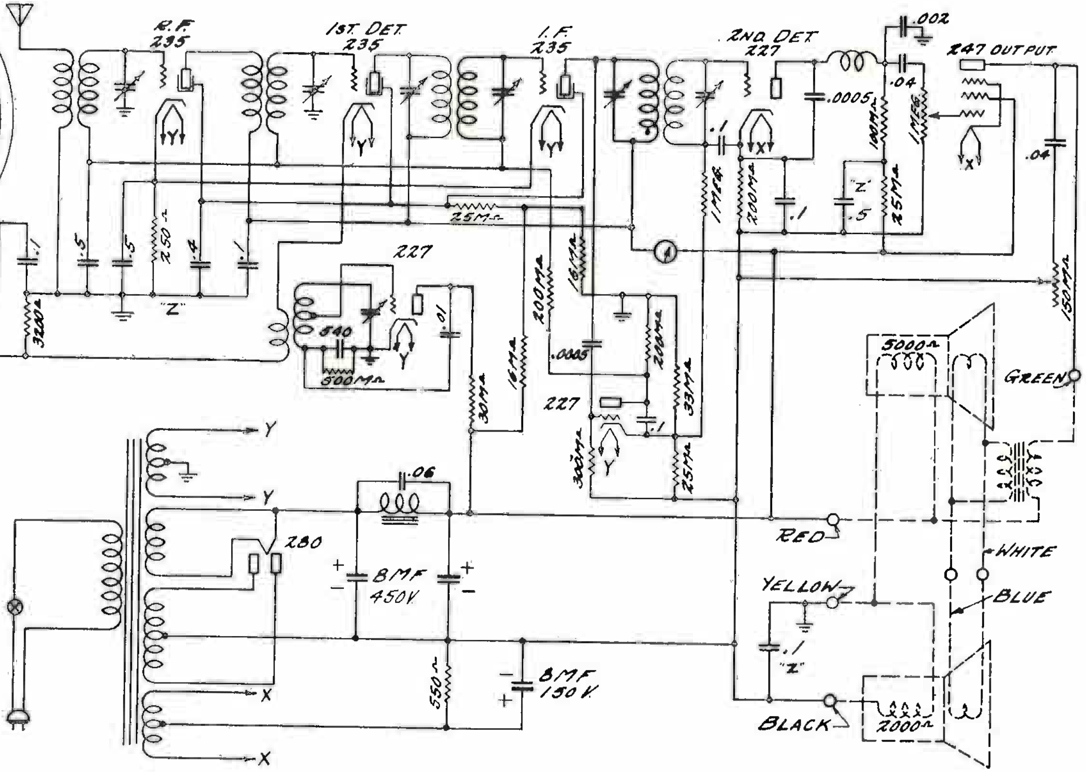

NOTE- CONDENSERS MARKED "Z" ARE IN ONE UNIT.

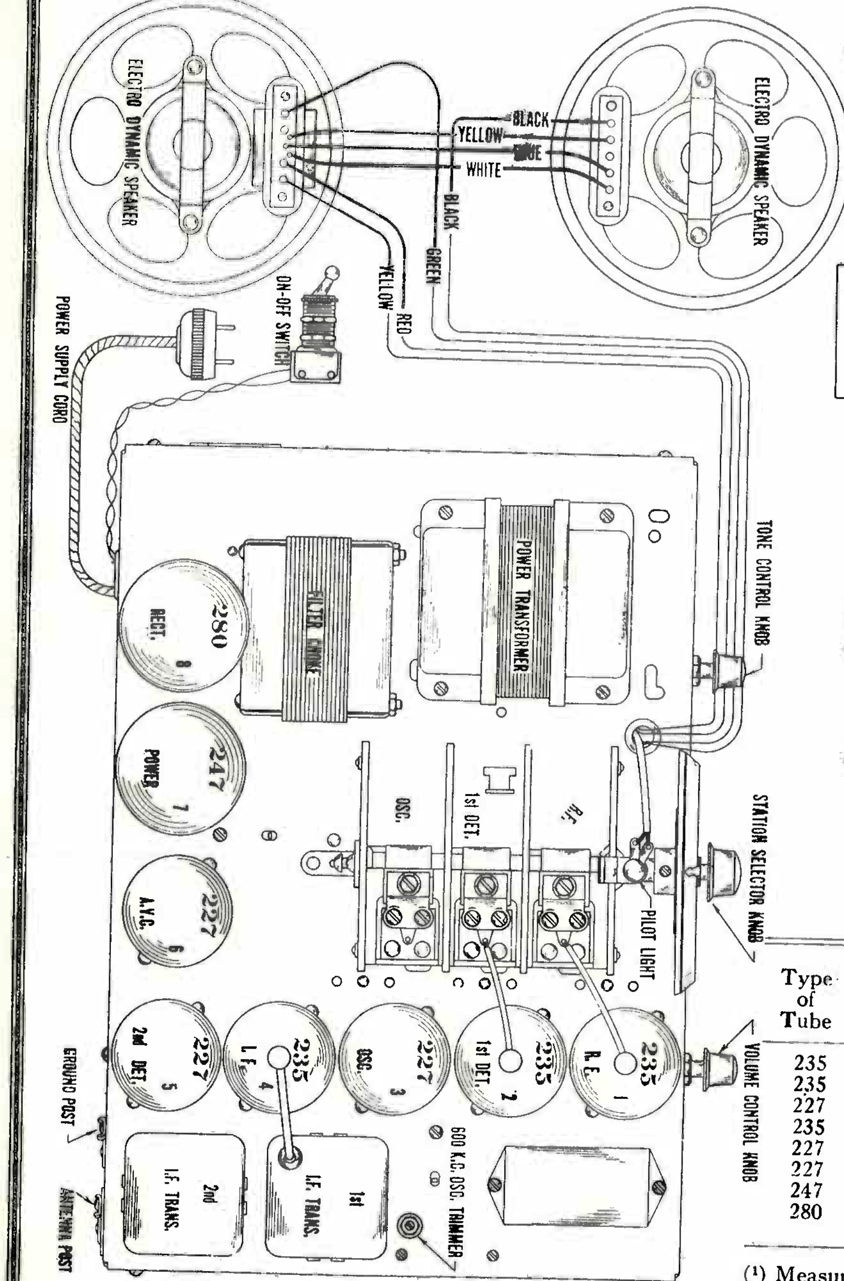

VOLTAGES AT SOCKETS—LINE VOLTAGE 115 VOLTS

Type of Tube	Position of Tube	Function	"A" Volts	"B" Volts	Control Grid "C" Volts	Screen Volts	Screen Current MA	Cathode Volts	Plate Current MA	Grid Test
235	1	R. F.	2.3	185	.4	45	.4	2.0	2.3	4.
235	2	1st Det.	2.3	185	5.4	42	.4	5.4	1.0	1.4
227	3	Osc.	2.3	105	10-25 (1)				3.1	3.2
235	4	I. F.	2.3	185	.4	45	.4	2.	2.3	4.
227	5	2nd Det.	2.35	145	10.				.4	.4
227	6	A.V.C.	2.25	80 (2)	45. (3)					
247	7	Power	2.45	265	19. (4)	290	5.		29.	32.
280	8	Rect.	5.0						42. Per Plate	

(1) Measured across 500 M ohm osc. bias resistor. Bias voltage varies from 10—25 volts between 1500 and 550 K. C.
(2) Measured from B— to A.V.C. plate.
(3) Measured from B— to A.V.C. cathode.
(4) Measured from B— to X fil. across 550 ohm resistor.

MONTGOMERY WARD & CO.

60 ~ 62-38 ; 62-44 ; 62-50.
25 ~ 62-38X 62-44X ; 62-50X.

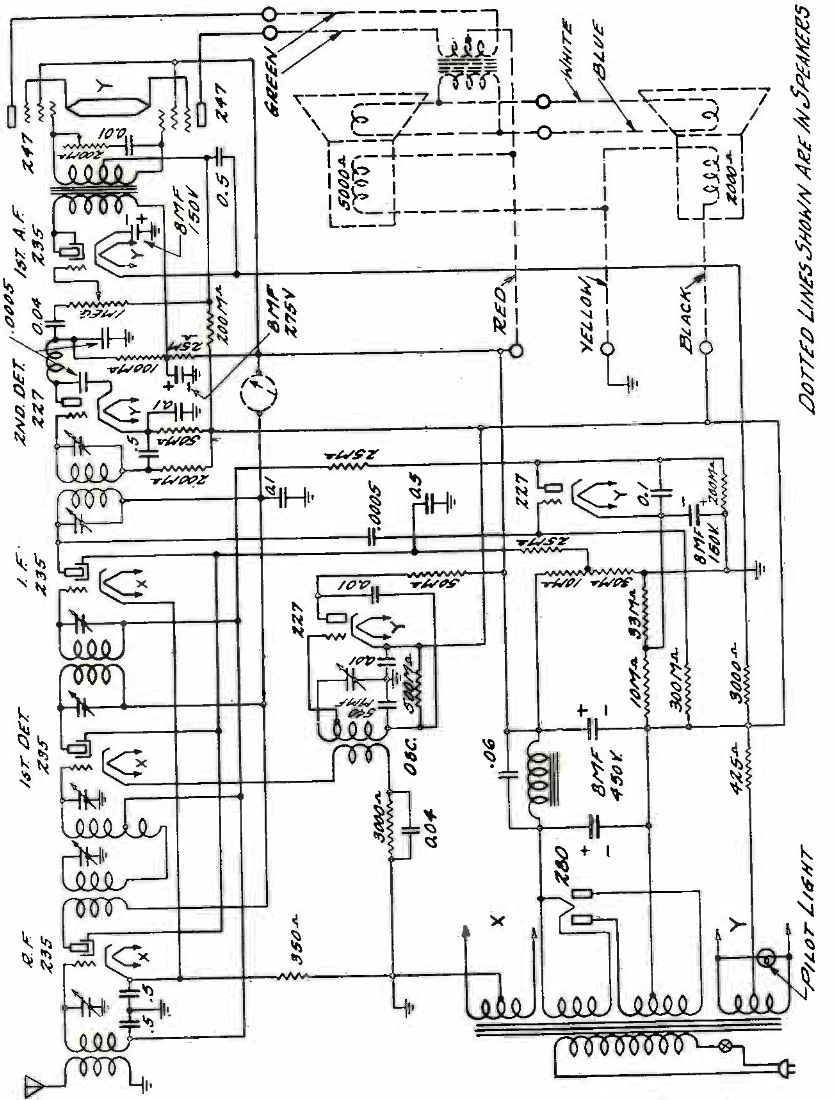

TEN TUBE DUAL SPEAKER SUPER-HETERODYNE

VOLTAGES AT SOCKETS—LINE VOLTAGE 115 VOLUME CONTROL AT MAXIMUM

Type of Tube	Position of Tube	Function	"A" Volts	"B" Volts	Control Grid "C" Volts	Screen Volts	Screen Current MA	Cathode Volts	Plate MA	Grid Test MA
235	1	R. F.	2.2	160	2.8 (1)	60	.4	0.	2.7	6.1
235	2	1st Det.	2.25	160	6.5	55	.3	7.	1.8	2.4
235	3	I. F.	2.2	160	2.8 (1)	60	.4	0.	2.7	6.1
227	4	2nd Det.	2.3	105	6.			5.5	.2	.3
235	5	1st Audio	2.3	125	13. (2)			7.	2.8	3.0
227	6	Osc.	2.35	110	11-28 (3)			21.	3.4	3.5
227	7	A.V.C.	2.3	55 (4)	21. (5)			1.5	0.	0.
247	8	Power	2.3	250	20. (6)	258	4.6		20.	26.
247	9	Power	2.35	250	20. (6)	258	4.6		20.	26.
280	10	Rect.	5.0						50. Per Plate	

(1) Measured across 350 ohm bias resistor.
(2) Measured across 3000 ohm bias resistor. B— to Cathode.
(3) Measured across 500 M ohm osc. bias resistor. Bias voltage varies from 11 to 28 between 1500 and 550 K.C. settings of tuning condenser.
(4) Measured from B— to A.V.C. plate.
(5) Measured from B— to A.V.C. Cathode.
(6) Measured across 425 ohm bias resistor. B— to "Y" filament.

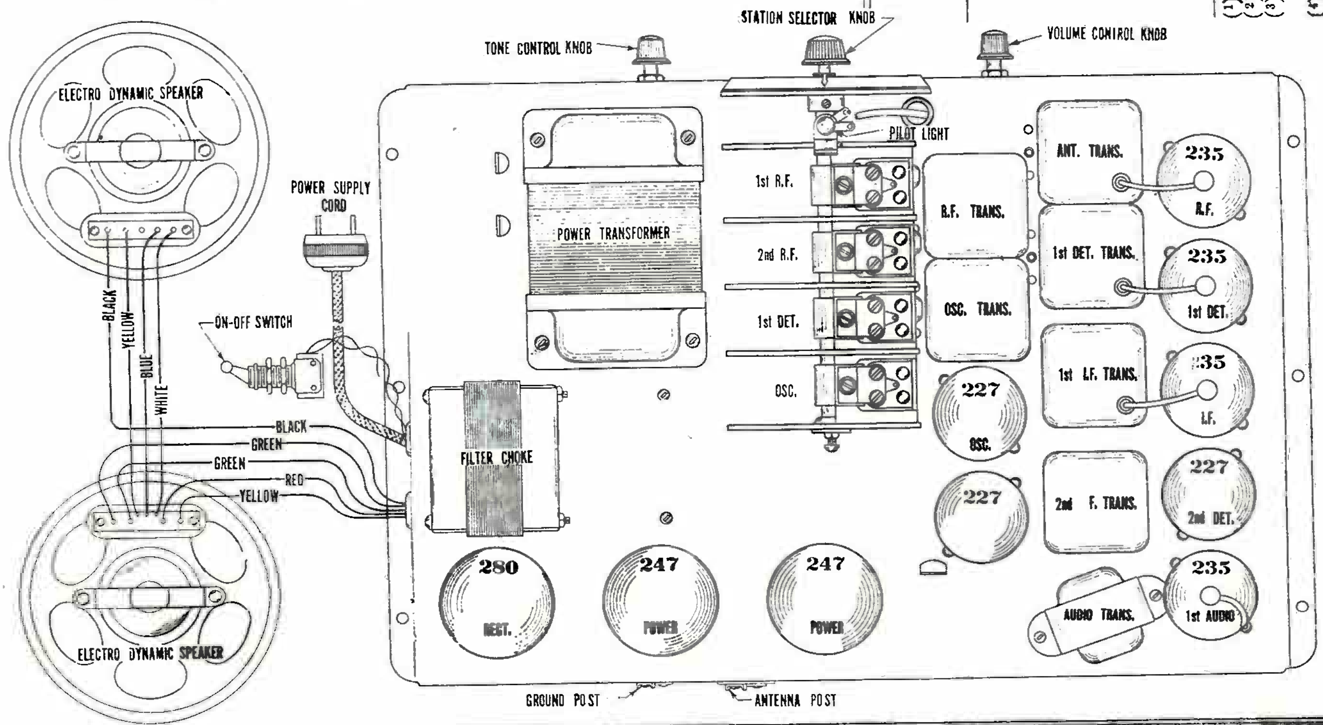

MONTGOMERY WARD & CO.

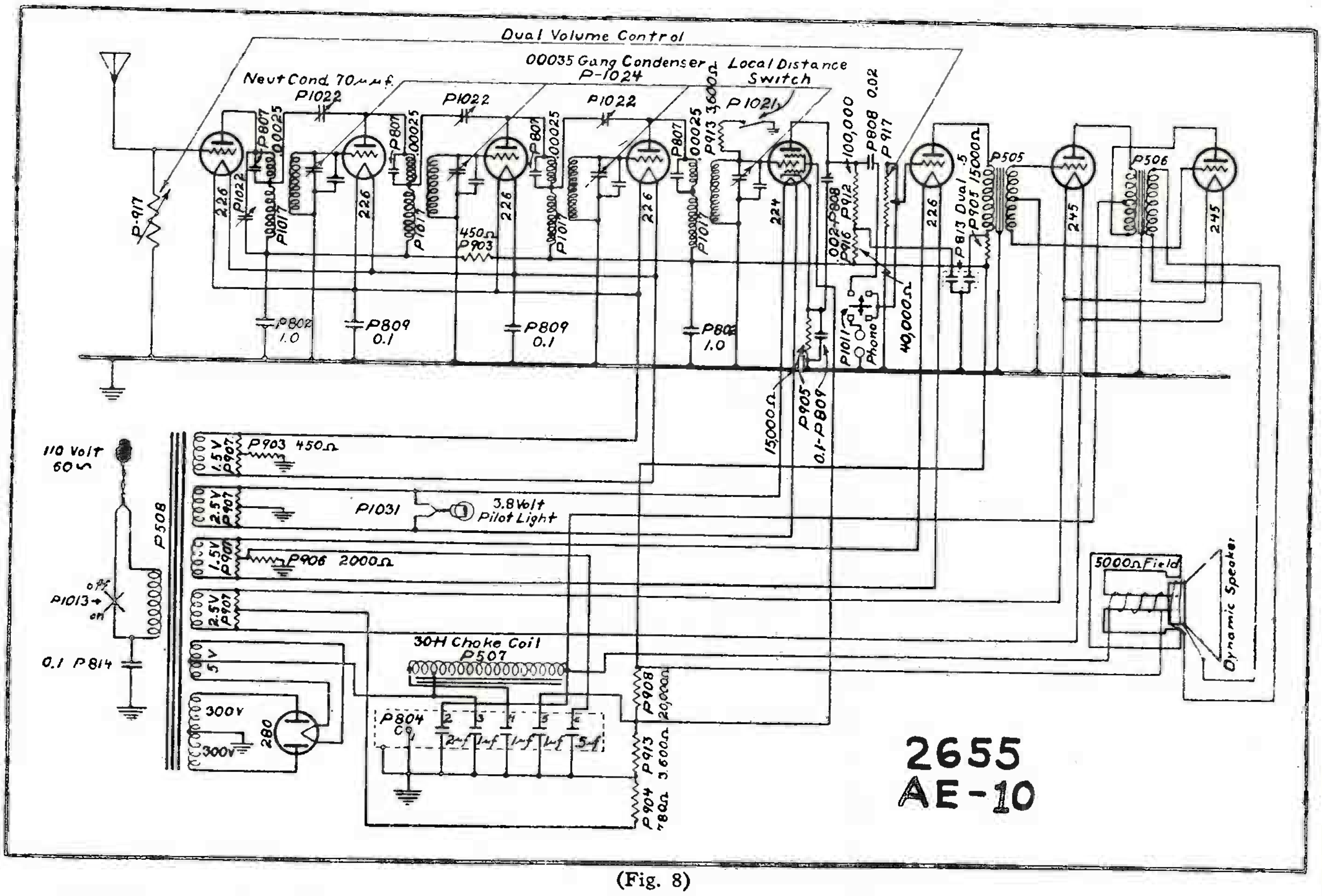

(Fig. 8)

REVISION OF OPERATING VOLTAGES

Type of Tube	Position of Tube	TUBE IN TEST SET							
		"A" Volts	"B" Volts	Control Grid ("C") Volts	Screen Volts	Screen Current	Cathode Volts	Normal Ma.	Grid Test Ma.
224	Det.	2.2	75	1.3	15			---	---
226	1st A.F.	1.4	77	1.0				4	5

Disconnect blue wire from lug *1. Splice piece to blue wire and connect to lug *2. Put resistor P916 between lug *2 and *3. Connect wire from lug *4 (1mf.cond.) to lug *5 (ground).

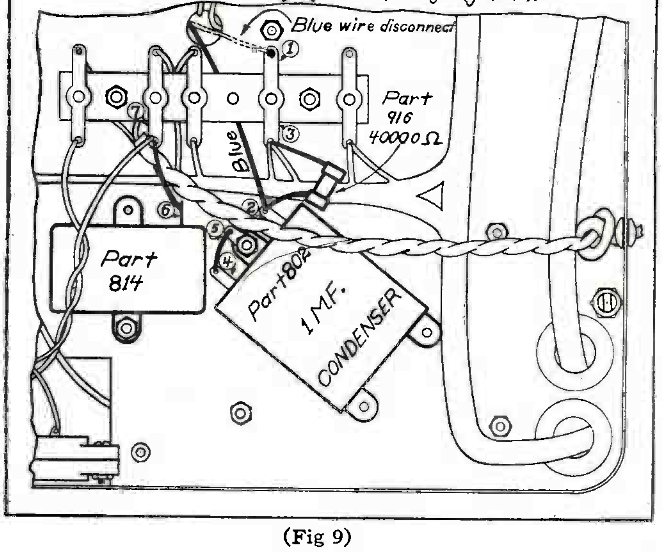

(Fig 9)

Part 814 (.1-mfd. condenser) fastened on choke coil mounting bolt. Connect wire from lug No. 6 on condenser to lug No. 7 on terminal strip.

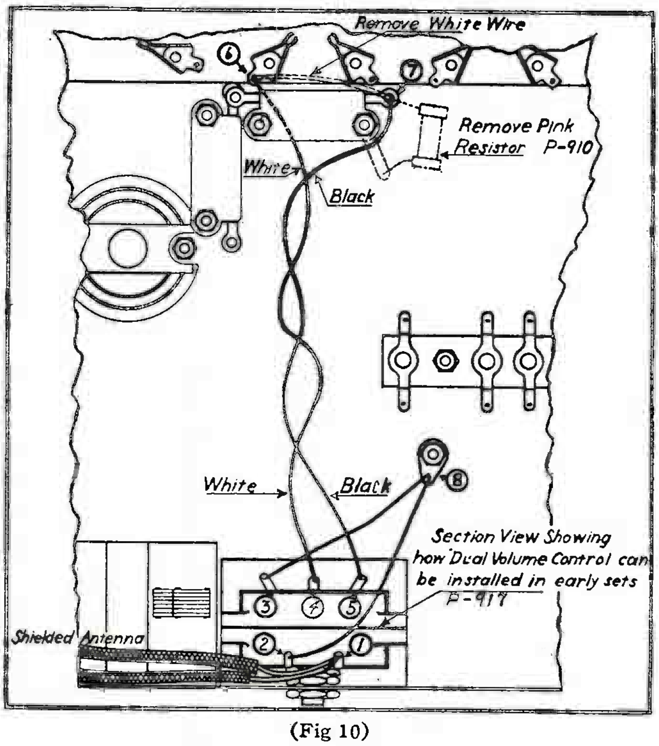

(Fig 10)

Remove pink resistor and long lug. Remove white wire between lug No. 6 and 7. Connect shielded antenna wire to lug No. 1. Connect wire from lug No. 3 to No. 8 and a wire from lug No. 2 to No. 8 (ground). Run white wire from lug No. 4 to socket contact, lug No. 6. Run black wire from lug No. 5 to lug No. 7. Twist black and white wires as indicated.

MONTGOMERY WARD & CO.

IMPORTANT NOTICE OF CHANGES

A. E. 10

THERE have been several changes made in the construction of this chassis since the start of production. This supplement will illustrate and explain in detail how to service the chassis now in production, or to convert any of the early sets to the new arrangement, if desired.

COLOR CODE

Changes on this chassis have been made on several different occasions and to distinguish how one chassis differs from another, an identification mark is placed on each one changed. This identification mark is a dot of paint found on the end rivet of the tube socket strip. Looking at the chassis from the back the mark is at the extreme left of the 226 tube socket (Fig. 5 service manual). If the chassis has no mark it is understood that it is an early set. Explanation of what each color represents in changes will be found in the following paragraphs.

Yellow Mark The chassis having the first changes may be identified by the yellow indicating mark. This involves four changes.

1. A "dual volume control" in place of the single type. The new volume control is made in two sections, with five lugs. The section nearest the chassis, having two lugs, operates exactly the same as the single volume control. The section behind the first, having three lugs, is placed in the first audio circuit to reduce the audio amplification and operates in tandem with the antenna volume control. Figure 10 shows pictorial wiring diagram of how dual volume control (P. 917) is installed.

2. An interchange of position of the two audio transformers. The re-arrangement of the audio transformers has not altered their connections in the circuit.

3. An addition of a "dual half microfarad condenser" (P. 813) and two carbon resistors in the "B" circuit of the detector and first audio tubes. The 40,000 ohm black resistor (P. 916) with one section of the dual condenser is placed in the detector circuit (224) and the 15,000 ohm blue resistor (P. 905) with the other section of the dual condenser is placed in the first audio circuit (226). You will note that the yellow and blue leads in the cable connecting to the terminal strip have been interchanged.

4. A change in the location of the grounding of No. 1 lug on the condenser block. This lug is now grounded to the condenser case with a short piece of bare wire.

Red Mark (Serial Number 39,000-42,999) All chassis having a red mark on the rivet of the tube socket strip have all of the changes mentioned above and in addition, have a one-tenth microfarad condenser (P. 814) connected from ground to one side of the 110 volt line (Fig. 9). A peculiarity that may be experienced by the addition of this condenser is a loud hum on every station tuned in only when the antenna wire coming from the set is connected to ground. This can be eliminated by reversing the plug in the socket. Also be sure your antenna is not grounded, either by some other set being connected to your aerial or through any other means.

Green Mark (Serial Number 43,000 and up) All Chassis with a green mark on the rivet of the tube socket strip contain the above changes and in addition have a change in the "combination phonograph switch" circuit. This changed circuit makes use of only the audio system of the set for phonograph reproduction, whereas the original circuit included the detector tube (Figures 7 and 8). The Phonograph, Radio, On, and Off positions of the switch are the same as in the early sets. To obtain maximum volume and best tone quality a pick-up coupling transformer should be used to match the pick-up used.

HUM

In addition to the paragraph on hum in the Service Manual, the following information will be useful for reducing hum. It is essential to isolate the source of the hum before attempting to reduce it. A screw-driver shorting the 226 A. F. grid to the ground will stop the hum if it is coming from the detector tube. Shorting across the primary of input push-pull transformer will stop hum originating in the 226 A. F. tube or ahead of it. Shorting across the grids of both 245 tubes will stop all hum starting in the input audio transformer or in the circuit ahead.

If the total hum is made up of a number of smaller ones throughout the circuit it may be due to a defective speaker field coil, filter choke, or center tapped resistor. It is very rarely due to the condenser block. If the tube is not defective, hum located in the detector circuit can be eliminated by the following procedure.

Connect a standard (1) one microfarad by-pass condenser (P. 802) and a 40,000 ohm resistor (P. 916) in the detector (224) circuit. Fig. 9 gives detail picture of how these parts are wired up. The condenser can be mounted on one of the power transformer mounting bolts. The 40,000 ohm black resistor (P. 916) is mounted between lug No. 3 on the terminal strip and one side of the condenser.

Some cases of hum can be traced to loose laminations in the power transformer which may be stopped by tightening the clamping bolts and wedging a thin piece of wood between coil and center iron.

OSCILLATIONS

Oscillations that can not be eliminated by methods given in the Service Manual on page 10, may be due to an open one-tenth microfarad condenser across the 226 filament or an open one-microfarad condenser on the 135 volt line connecting with the R. F. coils. It is a very unusual case when an R. F. coil gives trouble of any kind.

REPLACING VOLUME CONTROL

When replacing a volume control on the early type chassis, you have the option of using either the "single" (P. 914), or "dual" (P. 917) control. If the set is to be used in a locality where there are strong local stations which the single volume control cannot handle, the "dual" must be used to reduce the signal.

In rural districts where there are no broadcasting stations of high power within a radius of fifty miles, the single control (P. 914) is satisfactory.

Instructions necessary for wiring P. 917 into the circuit can be found on drawing No. 10, showing the under side of chassis. It is very important that the two soldering lugs marked No. 1 and No. 2 (Drawing No. 10) be at the bottom of the chassis, so that they are in practically the same position as they were on the single type volume control.

If the carbon volume control (P. 911) is replaced by the wire-wound type (P. 914), reverse the two connections when rewiring and be sure to get the shielded antenna wire on the lug not in direct contact with the case. The lugs on the new single wire-wound volume control (P. 914) are reversed with respect to type P. 911. Looking at the set from the bottom as in Fig. 6, a 911 unit is shown properly wired. A wire-wound volume control (P. 914) should be wired exactly opposite to this.

OPERATING VOLTAGES

Type of Tube	Position of Tube	TUBE IN TEST SET							
		"A" Volts	"B" Volts	Control Grid ("C") Volts	Screen Volts	Screen Current	Cathode Volts	Normal Ma.	Grid Test Ma.
226	1st R.F.	1.35	116	8.5				4.7	8.7
226	2nd R.F.	1.35	116	8.5				4.7	8.7
226	3rd R.F.	1.35	116	8.5				4.7	8.7
226	4th R.F.	1.35	116	8.5				4.7	8.7
224	Det.	2.2	80	1.3	15		—	—	—
226	1st A.F.	1.4	110	1.0				4.0	5.0
245	2nd A.F.	2.2	232	42				27	32
245	2nd A.F.	2.2	232	42				27	32
280	Rect.	4.6						84	

Line Voltage During Test—115 Volts.

Note—Readings as obtained with Weston or Jewell test set. Observe that "C" voltage on 1st Audio appears low due to resistance coupling. All "B" voltages may vary slightly from this chart due to variation in tubes.

MONTGOMERY WARD & CO.

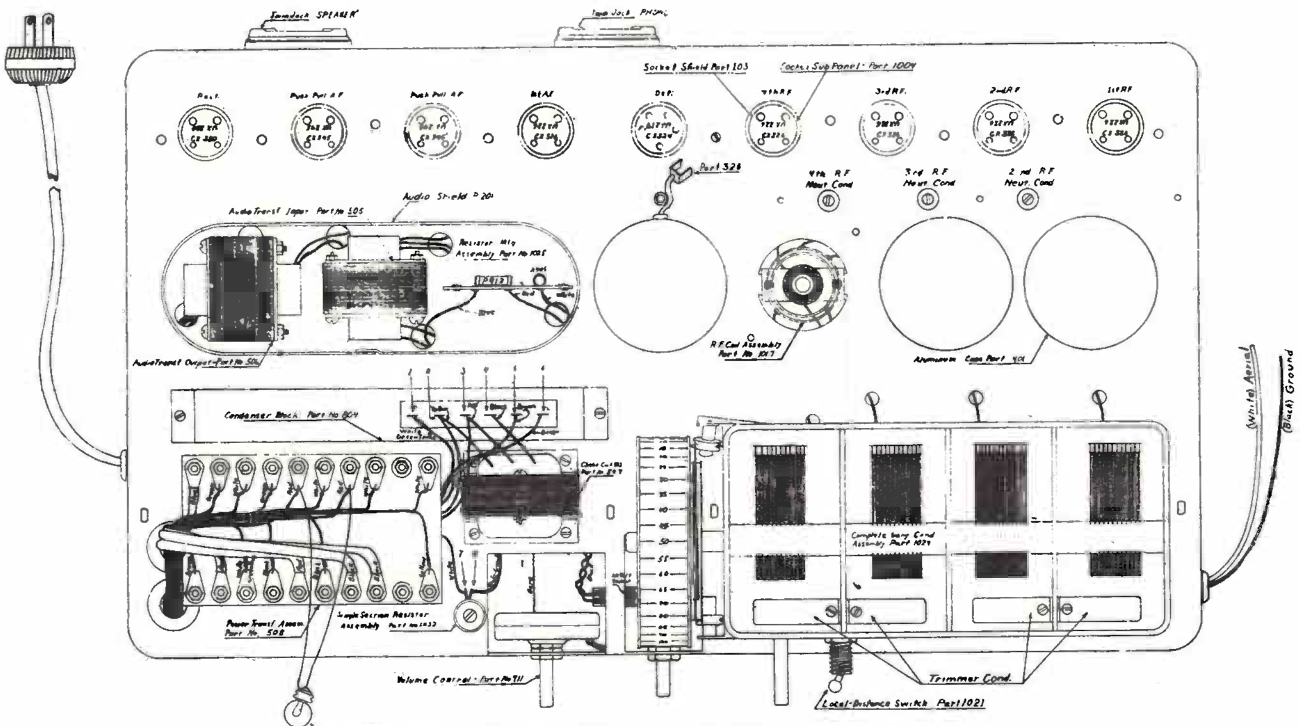

Top View of Chassis

AE-10

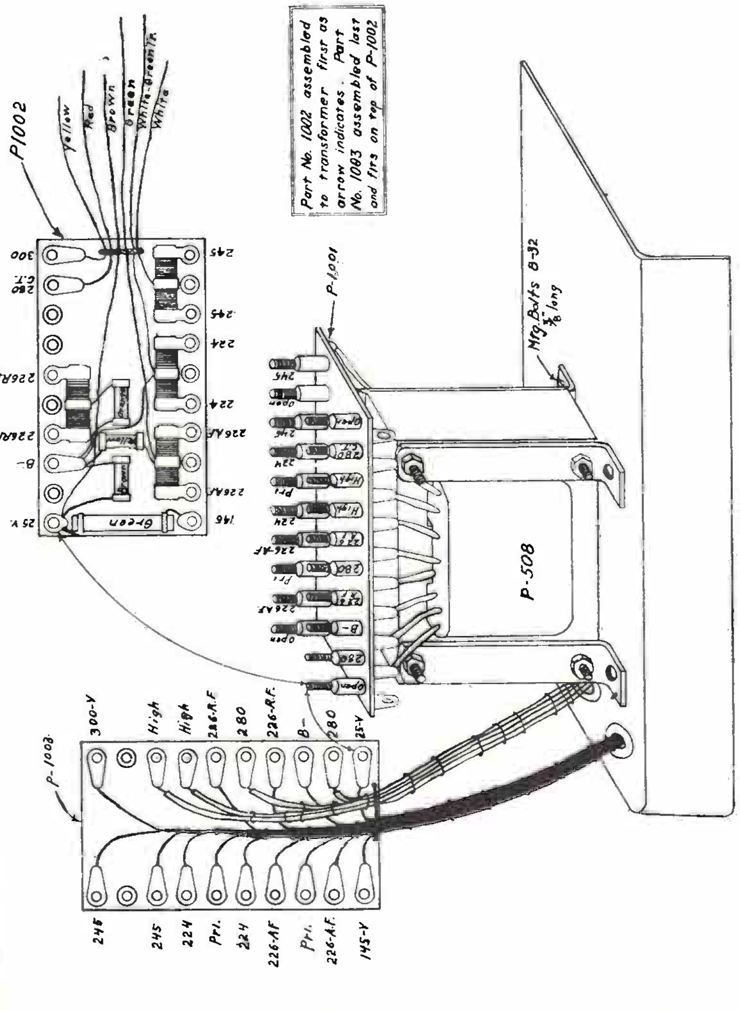

Part No. 1002 assembled to transformer first as arrow indicates. Part No. 1003 assembled last and fits on top of P-1002

Power Transformer and Terminal Plate Assembly.

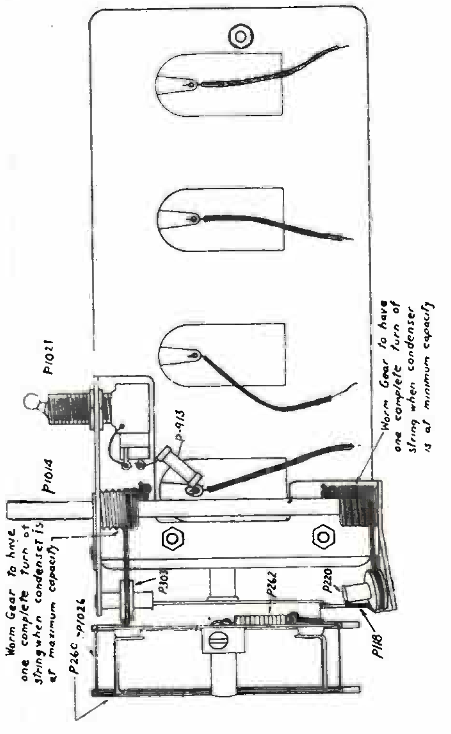

Worm Gear to have one complete turn of string when condenser is at maximum capacity

Worm Gear to have one complete turn of string when condenser is at minimum capacity

Condenser and Dial Assembly.

MONTGOMERY WARD & CO.

Introduction

THERE are certain fundamentals about the installation of an auto set that should be studied and considered seriously before any attempt is made to install the receiver in the car. No attempt will be made in this manual to state definitely how the set should be installed in each make of car. Instead we will go through step by step the method of installing each unit of the set, giving the different methods that may be used in installing these units. *One of these methods will be applicable to any make of car.* The type of installation should be determined upon for the particular car on which the set is installed before starting the job. The different methods of installation with diagrams and complete installation data are given in other parts of the service manual, and these should be carefully checked over and *the best method of installing each unit determined before any attempt is made to install the receiver.* The chassis (unit containing tubes) may be installed in any one of a number of locations; steering column, on the dash underneath the cowl or on the dash under the hood. The "B" eliminator or "B" battery box can be mounted at any convenient position under the seat or under the car.

In mounting the "B" eliminator it is preferable to mount it at least three feet away from the radio chassis, under the hood, or in any one of the locations shown in the manual. It should be installed so that it will not interfere with the operation of any of the controls on the car, and not placed near the exhaust pipe. The chassis may be installed in any one of the locations shown in the manual, and in such a position that it will not interfere with the cowl ventilator or operation of the pedal controls. The tubes should be tested and placed in the chassis before it is mounted, as it is difficult to install the tubes after the receiver chassis is permanently mounted. The speaker may be located in any position that is convenient. It is generally mounted on the dash under the cowl. If the set is installed in a tight corner, be sure the antenna trimmer screw is adjusted before the set is mounted. Complete information on this adjustment is given on page 11.

A radio service man and an automobile mechanic or ignition man can co-operate to advantage in installing the receiver. A garage is the best place to work and a portable electric drill, pliers, soldering iron and solder, small wrenches, and a screw driver, are the essential tools.

Although the installation of the automobile radio may appear to be a difficult job, by giving a little thought to the installation before hand as outlined in the foregoing, and with the proper tools the installation is comparatively simple. The performance of an auto radio can hardly be compared with the performance of an AC receiver in the home. The auto receiver must operate on a very small antenna and under many varying conditions. If care is taken, however, in the installation, the performance of this sensitive superheterodyne will be found to be excellent. *Remember, much depends on using the best antenna possible.*

General Procedure

Before installing the receiver look over the units and check them against the parts listed in the back of this manual, so that you are certain you have all of the necessary units.

The general order in installing is to mount the control unit, chassis, flexible drive shaft, speaker, "B" eliminator or "B" battery box and antenna. Install the suppressors and condensers for the elimination of ignition and generator noise.

Important

Before installing the control unit, chassis, and flexible drive shaft, read over the data in this manual explaining the mounting of these units, and determine which installation is to be used according to the space available. The important item to be considered in this connection is the distance between the control box and the chassis as there are only three lengths of control shaft which can be supplied, fourteen inches, thirty-four inches, and forty-five inches, and the control shaft cannot be cut

MONTGOMERY WARD & CO.

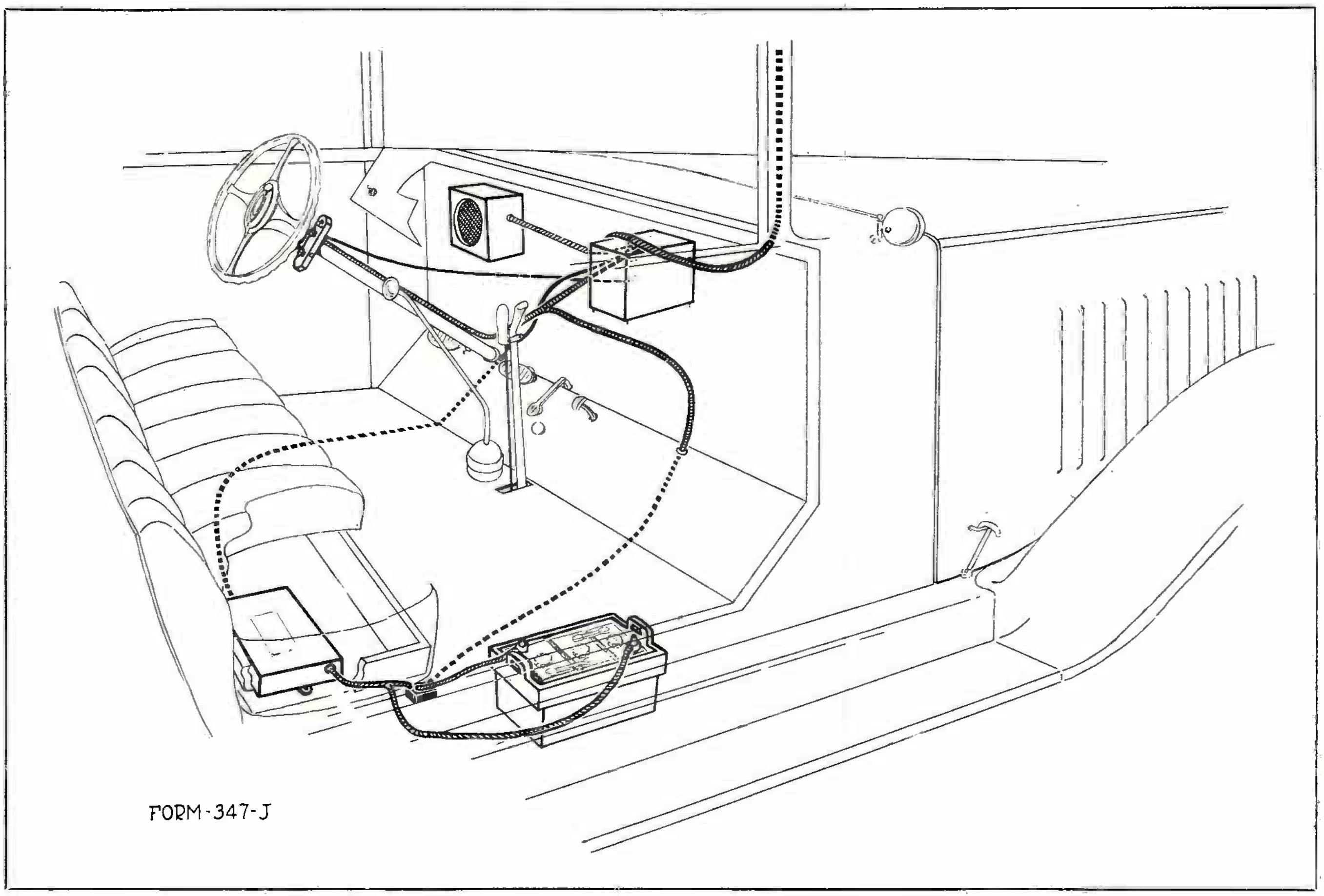

Fig. 1—General Layout Plan of Units in Automobile

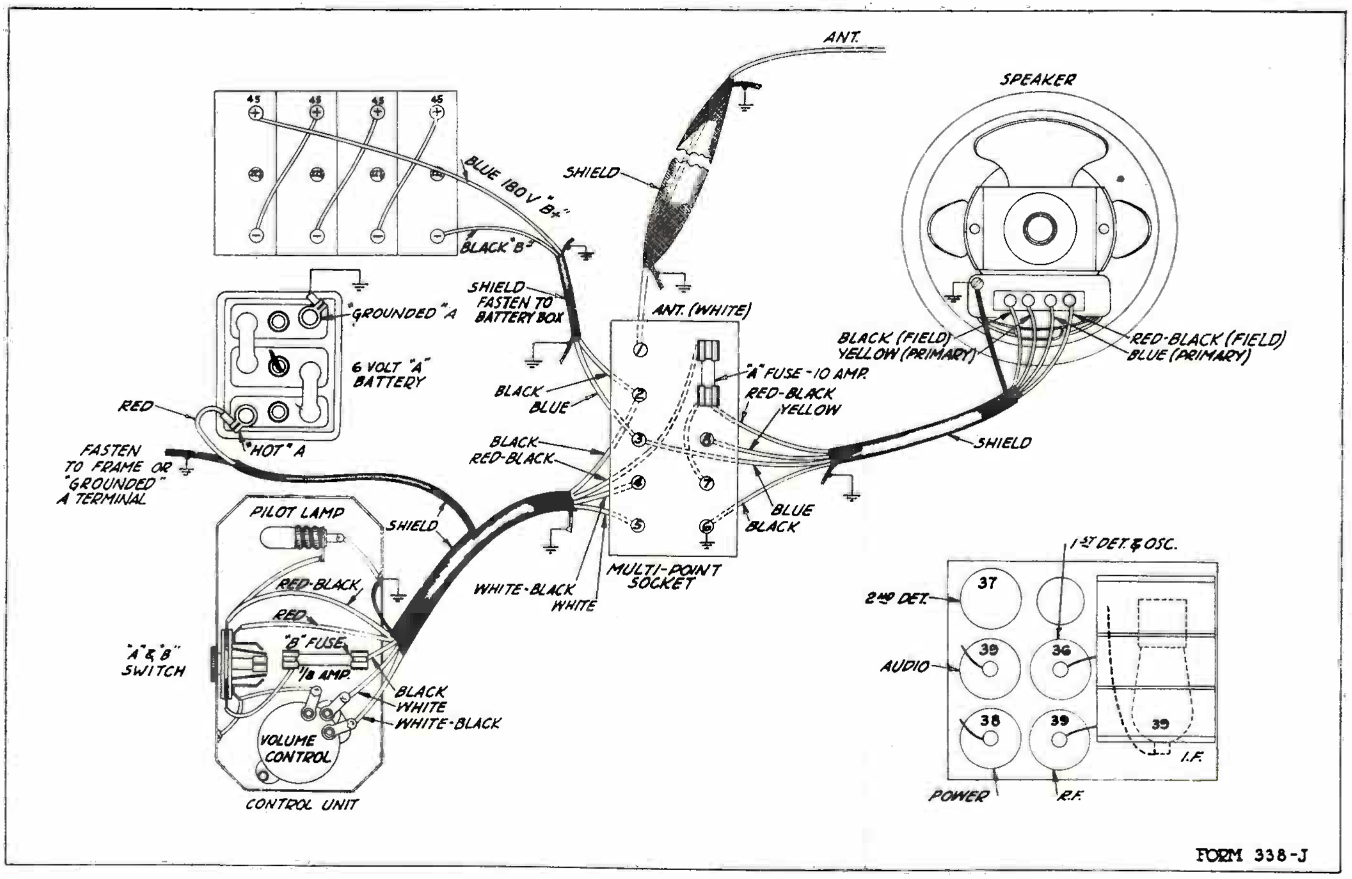

Fig. 11—Complete Unit Wiring Diagram

MONTGOMERY WARD & CO.

Mounting the Control Unit

The control unit is mounted on the steering column under the steering wheel as shown in Fig. 2. The bracket can be screwed to the top and center hole or the center and bottom hole on the left side of the box, depending on the position of the control unit desired.

Wrap one or two pieces of the felt provided around the steering column, leaving room for the set screws to pass before connecting the two parts of the clamp together. The four 8-32 x 3/8″ fillister head screws are used for this purpose. When the clamp is in place, take the two 8-32 headless cup point set screws and screw them down on the steering column through the holes in the clamp.

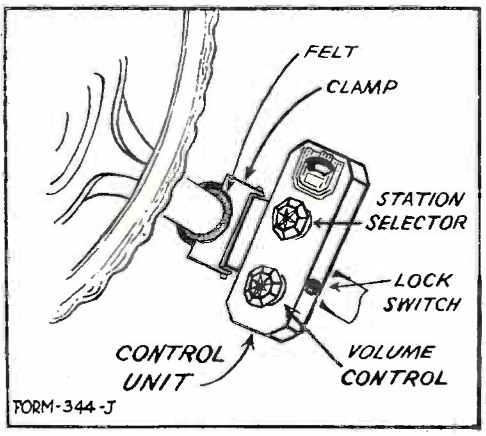

Fig. 2—Control Unit on Steering Column

The control unit is generally about 4″ below the wheel, but this will vary with individual cases. The length of the drive shaft and interference with driver's legs will also govern the location of the control unit.

There are two screws which hold the inside portion of the clamp to the bracket on the box. By loosening these two screws, the box can be swung around if such a position is handier from the standpoint of the person operating the set.

Mounting the Chassis

There are three general ways to mount the chassis as shown in Fig. 3; on the steering column, No. 1, in back of the dash, No. 2, and in front of the dash, No. 3. There are three flexible drive shaft lengths: 14″, 34″ and 45″. The 34″ length is regularly supplied with the set unless otherwise specified. The shorter and more direct the flexible drive shaft is, the easier it will turn.

Mounting Chassis on Steering Column

Mounting the chassis on the steering column is by far the easiest method, but be sure there will be no sharp curves in the drive shaft or this method cannot be used.

A steering column mounting is provided and is composed of two parts: the base and the clamp. First attach the base to the chassis box. There are four brackets on the bottom of the chassis box to which the base is attached. It will be noted that the base can be put on lengthwise or crosswise of the bottom of the chassis.

The chassis may be mounted over, or on the side of the column, depending on the space available. It should be mounted in such a way as to make the flexible drive shaft to the control unit as short and in as straight a line as possible. The chassis should not interfere with the feet or legs of the driver, nor with the action of the pedals, hand brake, cowl ventilator or any other apparatus.

Secure the steering column mounting base to the chassis brackets with four of the 10-32 x 3/8″ fillister head screws. The other six screws of this type supplied are used to screw the clamp of the steering column mounting to the base. Two or four of the pieces of felt provided should be wrapped around the steering column before the mounting goes on. When the mounting is in place, take the two 1/4″ No. 20 Cup Point set screws and screw them down on the steering column through the holes in the clamp.

Before the chassis is permanently mounted, the tubes should be inserted, antenna trimmer adjusted (as explained in section on trying out the set), and the flexible drive shaft connected (as explained in next article).

Mounting Chassis in Back of Dash

If the chassis cannot be mounted on the steering column the next best place is in back of the dash, position 2, Fig. 3. Locate it in such a way that the flexible drive shaft to the control unit will have as few bends as possible. In general the 34″ length will be used for this method of mounting. Well up under the cowl and to the right of the steering column is a good location.

First drill the three mounting holes required for the dash mounting plate. The location and size of these holes is shown in Fig. 4. A template for drilling these holes is supplied with the set. Three 3″ square head mounting bolts are supplied. Take two

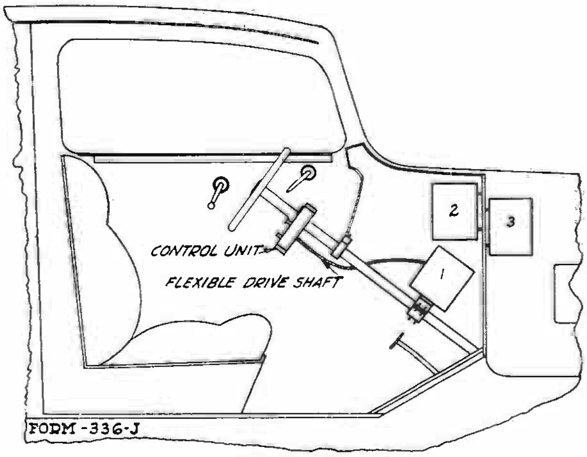

Fig. 3—Possible Chassis Locations—Position 3 used only when absolutely necessary.

MONTGOMERY WARD & CO.

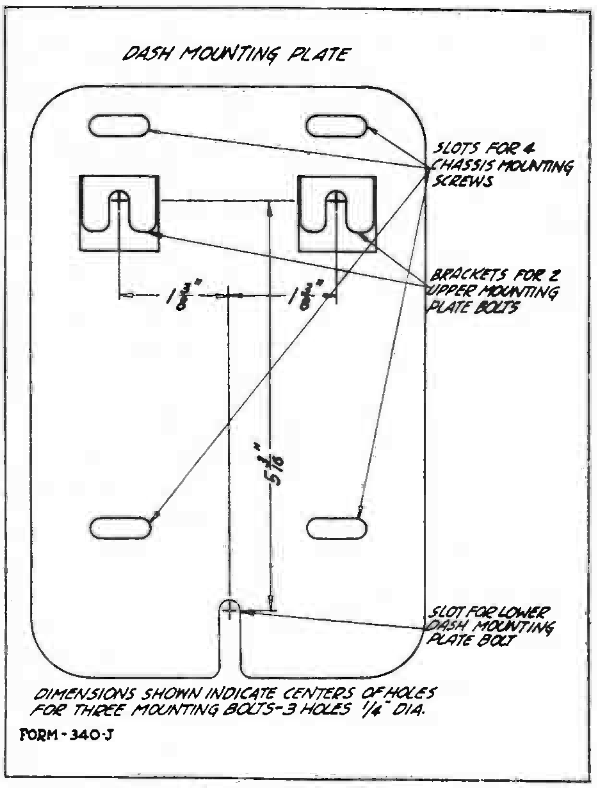

Fig. 4—Dash Mounting Plate

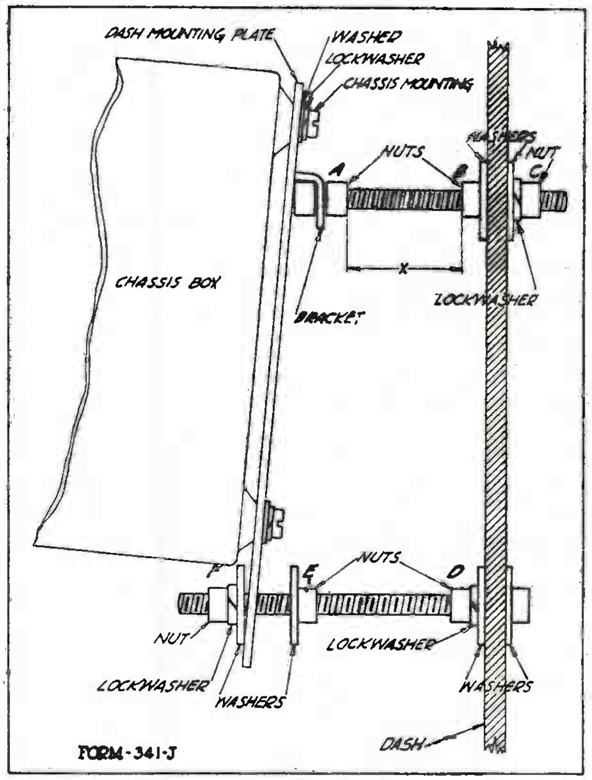

Fig. 5—Details of Chassis Mounting on Dash

of these, which will be used for the upper part of the mounting plate and screw on nut "A" (See Fig. 5). The nut should be just far enough away from the head of the screw to permit the bracket of the mounting plate to slip down as shown in the illustration. Then put on nut "B" and a washer, after which the two bolts can be put through the dash, with the shanks extending into the engine compartment as shown in Fig. 5. A washer, lockwasher, and nut are then put on these bolts, from the front of the dash to hold them in place.

NOTE: If the chassis is mounted with the cover on the bottom, it will be necessary to drill the lower mounting hole $5\frac{11}{16}''$ from the top mounting holes rather than $5\frac{3}{16}''$ as shown in Fig. 4. Also, it will be necessary to put several washers between the dash mounting plate and the lower mounting holes on the chassis box, indicated in Fig. 4. The latter is necessary in order to keep the dash mounting plate from interfering with the wing nuts if the cover of the chassis box is taken off.

The distance "X" between nuts "A" and "B," which determines how far out the chassis is mounted from the dash, will vary with the model of car. If there is a lot of apparatus in back of the dash, such as wires, tubing, etc., the chassis will have to set out far enough to clear it. If there is little or no intervening apparatus, the chassis can be set in closer to the dash. In general, get it as close as possible. Then put a washer on the third mounting bolt and put this bolt through the lower hole with the head on the engine side of the dash as shown in the illustration. Put on a washer, lockwasher, and nut "D" and tighten it up. Then put on nut "E," screwing it on far enough so that it will not interfere with the mounting plate.

Next, secure the dash mounting plate to the chassis box by means of the four chassis mounting screws. Note that there are four screws on one of the narrow sides of the box and four screws on one of the broad sides. The purpose of this is to permit the attachment of the plate to whichever side is most convenient. Consideration should be given to the space available and also to the location of the anchor bushing on the chassis box. In general, the cover of the chassis should be at the bottom in order to get at the tubes. All the tubes should be in the sockets and the antenna trimmer adjusted (as explained later) and flexible drive shaft connected before the chassis is permanently installed.

The four mounting screws pass through the four slots in the mounting plate. After they are in place and tight, the dash mounting plate with chassis attached is slipped over the three mounting bolts. The two upper brackets on the plate slip down in back of nut "A" as shown in Fig. 5, and the slot at the bottom of the plate slips over the shank of the lower bolt in back of nut "E." The plate will then hang with the bottom farther away from the dash than the top. A washer, lockwasher and nut "F" are then put on the lower mounting bolt. Nut "F" is then screwed on until the mounting plate is about parallel with the dash. In this position, the bracket at the top of the mounting plate should butt up against nut "A" and be tight. If it is not, continue to screw on nut "F" a slight amount. Nut "E" can then be screwed back and tightened against the mounting plate.

MONTGOMERY WARD & CO.

Mounting Chassis in Front of Dash

This position of mounting should be used only if the other two locations are not possible. Mounting the chassis in front of the dash is undesirable because interference from the car ignition system is greater, the set may be ruined by water and the cable must be unsoldered to get it through the dash.

In general, the procedure is the same as described for mounting in back of the dash. The chassis should be mounted with the anchor bushing on the side so that only a 90° bend is necessary to bring the flexible drive shaft through the dash. When mounted in front of the dash the chassis cover should be on top to get at the tubes.

Attaching the Drive Cable

As already mentioned, the flexible drive shaft comes in three lengths: 14″, 34″ and 45″. The 34″ length is supplied unless otherwise specified on the order. The other lengths may be had by special order or by so specifying at the time the order for the set is placed. *The shaft cannot be cut to length.*

If the 14″ length cannot be used, the next best length, of course, is the 34″ length. The chassis must be so placed relative to the control unit that this length of flexible drive shaft can be put on with a minimum amount of bending. In general, one large radius 90° bend or an easy spiral around the steering column is all that is necessary. The less the number of bends and the larger the radius of them the easier the drive will turn.

Attach the flexible drive shaft at the control unit first. Take off the bottom portion of the box by removing the station selector knob and unscrewing the end screws. The bottom portion of the box may then be dropped away as far as the leads will permit.

In Fig. 6 are shown the constructional details of the flexible drive shaft connections. First loosen the clamping nut on the anchor bushing. Pull the end of the drive shaft about 1½″ out of the casing and push it into the hole at the center of the drive pinion. There is a set screw in the pinion which holds the drive shaft in place. When the shaft is inserted the flat portion should be under this set screw. Tighten down the set screw on this flat portion.

Then push the flexible drive shaft casing into the hole in the anchor bushing and tighten down the clamping nut. This presses the slotted sections of this bushing down on the casing, holding it firmly in place. *Do not tighten the clamping nut excessively.*

Check the centering of the anchor bushing with relation to the holes for flexible shaft. If the end of the casing presses against the shaft it will turn hard. Check all moving parts for grease and apply some if necessary.

The same procedure is then followed in attaching the flexible drive shaft and casing at the chassis. The dial scale should be at the low frequency end stop when the rotor plates are completely meshed. Calibration is very simple on this model and is very easily accomplished after the drive shaft is installed, by continuing to turn the station selector knob at one end of the scale or the other until the scale is correctly set.

If the stops on the dial gear in the control unit act before the stops on the drive gear on the condenser rotor, it will be necessary to loosen the set screw on the bushing of the drive gear rotor. Shift this gear in a counter-clockwise direction the amount necessary to bring the gear stop into action at the same time as the control unit gear at the high frequency end. When this has been done, the gang condenser will act as its own stop at the low frequency end and the gear as the stop at the high frequency end.

The complete assembly should be tried out before the chassis is permanently fastened.

Before tightening the clamping nut on the casing at the chassis, loosen the clamping nut at the control box end. Then adjust the casing until it is securely clamped at both ends when the clamping nuts are tightened down. The flexible drive shaft may, if desired, be taped to the steering column and clamped to the dash.

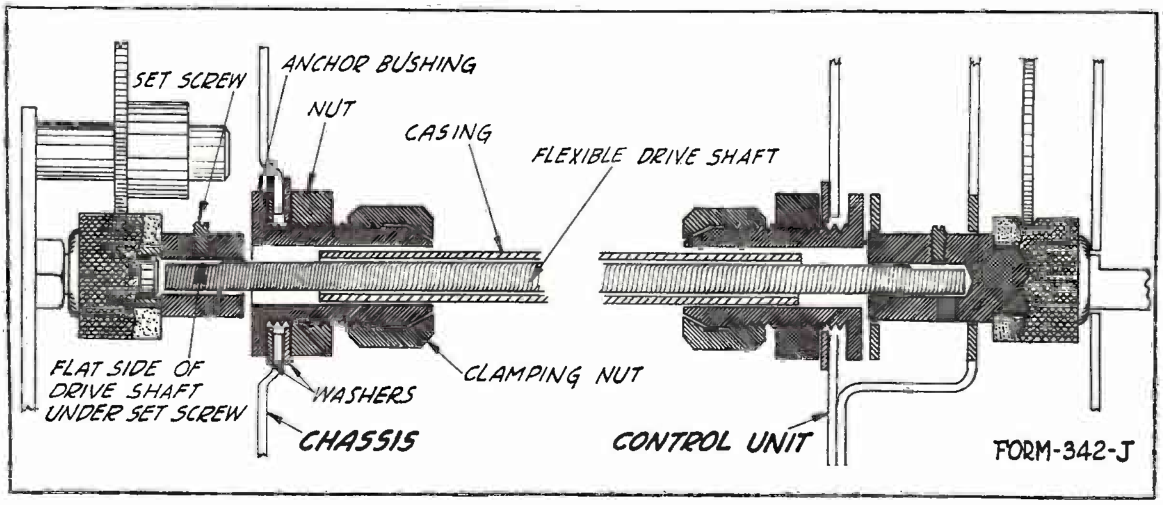

Fig. 6—Details of Flexible Drive Shaft Connections

MONTGOMERY WARD & CO.

Mounting the Speaker

An electrodynamic speaker installed in a wood case is supplied. Acoustically, the best position for the speaker has been found to be on the dash as shown in Fig. 1. Mount it as low as convenient. It may be mounted over the steering column as in the illustration or at any other convenient position on the dash. Before mounting it on the extreme right side of the dash, consideration should be given to the possibility of a car heater being installed. It is not advisable to mount speaker very close to the chassis as in some cases microphonic noises will result.

Before proceeding with the mounting of the speaker, connect the speaker cable to the terminal strip. The shielded four-lead cable passes through the hole on one side of the box. Connect the cable to the terminal strip on the speaker as explained in the section on wiring.

The tone control is mounted on the speaker. Mount the speaker in such a position that the knob will be most accessible.

Mounting "B" Eliminator and Relay

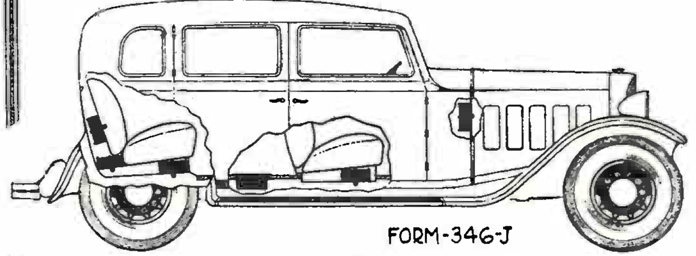

Fig. 7—"B" Eliminator Locations

In addition to the following instructions, a complete installing bulletin for the "B" eliminator is furnished by the manufacturer with each unit. The "B" eliminator can be conveniently mounted in a number of locations in the car as shown in Fig. 7. Under the front seat or in the motor compartment under the hood is a convenient place. The eliminator should be at least 12" away from any ignition or lighting wires of the automobile. Never install the eliminator on end, that is, with the mounting brackets at the top and bottom. Short out the "B" fuse when a "B" Eliminator is used.

In Fig. 1 the "B" eliminator is shown under the front seat, at the right hand side, for illustrative purposes. If, as shown in the illustration, the antenna lead comes down the right front corner post and the "B" eliminator is under the front seat, it should be moved to the left as far as possible. In general, mount it on the opposite side of the car that the antenna lead is installed.

The relay should be mounted near the car storage battery so that the two leads will reach. It is mounted on the frame of the car. Before making any connections to the battery, determine which side is grounded and which side is ungrounded. Then find out if the ungrounded or hot side is positive or negative. This will vary with the make of car.

In Fig. 8 is shown how the connections are made in either case. Unscrew the clamp bolts on the battery and connect lug of yellow lead to the "hot" side of the battery and the lug of the black lead to the grounded side. The bolt goes through the hole in the lug and the lug is bent over. Connect the shielded two-lead cable from the "A" battery and relay to the "B" eliminator. Note that the proper connections will depend on which side the battery is grounded. The "B" cable connections from the chassis may then be completed to the "B" eliminator. It is important that the "B" cable to the eliminator be located as far away from the "A" supply cable as possible. Run them to the "B" eliminator at opposite sides of the car as shown in Fig. 1.

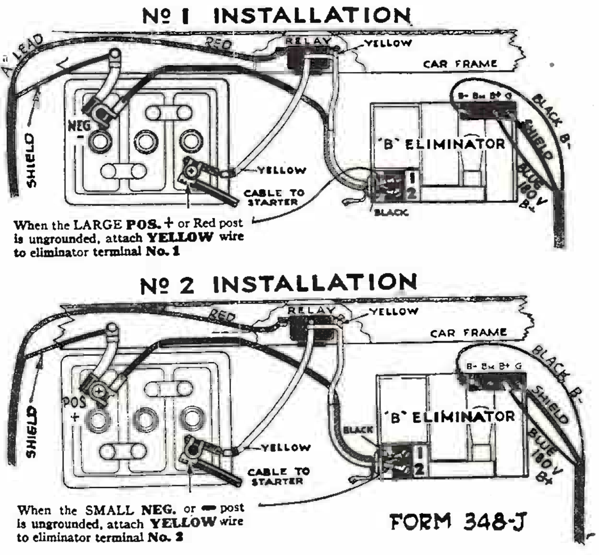
Nº 1 INSTALLATION

When the LARGE **POS. +** or Red post is ungrounded, attach **YELLOW** wire to eliminator terminal **No. 1**

Nº 2 INSTALLATION

When the SMALL **NEG.** or **—** post is ungrounded, attach **YELLOW** wire to eliminator terminal **No. 2**

Fig. 8—"B" Eliminator Connections

Testing With "B" Batteries

If for any reason the set should be tested with "B" batteries, the diagram shown in Fig. 11 should be followed. Because of the extremely short life of "B" batteries on automobile sets, they are not recommended for permanent installations. The "B" eliminator is far more satisfactory, less trouble to install and is much cheaper in the long run. The occasion might arise, however, when it is desirable to use "B" batteries for test purposes to determine whether the "B" eliminator is performing properly or not.

MONTGOMERY WARD & CO.

Installing Antenna

First see if there is a built-in antenna. Many cars today come equipped from the factory with a roof antenna. The lead-in generally goes down to the right front corner post and is up under the cowl at the right hand side. (facing forward). This lead is connected to the white antenna lead from the set. Care should be taken not to have the lead come in contact with the shield on the antenna lead from the set. Ground the shield on the antenna lead-in at the antenna end.

For any type of antenna, keep the lead-in as far as possible away from the "B" eliminator and from the car ignition system. To try out the effectiveness of any antenna used, check the volume against the volume when using a straight length of wire about 15 feet long run out of the car through one of the windows. If there is no built-in antenna, one of the following can be installed.

Remember, the better the antenna the better will be the reception.

Roof Antenna

The built-in roof antenna is the most satisfactory type. To get inside of the top, it is advisable to employ the services of an experienced man. Otherwise the top may be severely damaged. Most tops have a chicken-wire mesh which is used to support the roof material. It will be necessary to determine if this screen is grounded. To do this, use a continuity meter. By means of a wire, attach a darning needle to one of the prods, poke the darning needle into the roof material, and turn it around until it comes in contact with the chicken wire. Then ground the other prod and if the continuity meter shows a complete circuit, the chicken wire mesh is grounded.

It will be necessary in a case of this kind to remove the top material and cut away the chicken wire from the side supports until it is at least 3″ away from ground at any point. It should also be at least 3″ away from the dome light and the dome light wiring. The chicken wire may then be laced to the points from which it was cut with a heavy, waxed cord.

The chicken wire will then make a satisfactory antenna, or a copper screen may be used. A piece of copper screen at least four square feet in area will be sufficient. Use shielded wire for the lead-in and bring it down the right or left front corner post depending on set location. A piece of loom should first be put over the lead-in and the shield placed over the loom so as to reduce the ground capacity.

Under-Slung Antenna

A highly satisfactory antenna on most installations is the one listed on Page 15, No. 5411. This antenna consists of a narrow piece of copper screen, stitched into an envelope of heavy leatherette. The envelope is water-proofed to prevent absorption of moisture. Webbing strips are provided at each end to fasten the antenna to the car and a heavy coil spring is inserted at one end to keep the antenna tight.

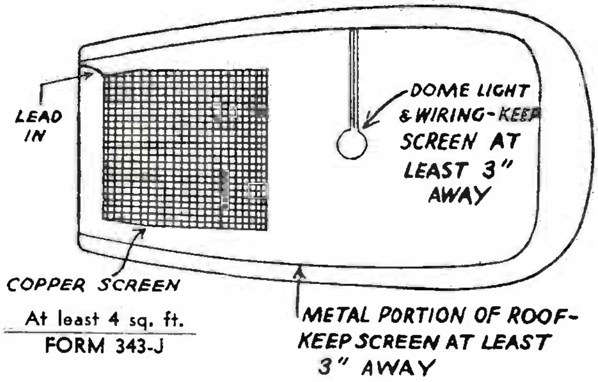

Fig. 9—Screen Antenna in Roof

The method of installation is to fasten one end around the rear axle and the other end around the front axle. The antenna lead from the set should be shielded and then brought underneath the car to the antenna connection. This connection should preferably be soldered and then well taped.

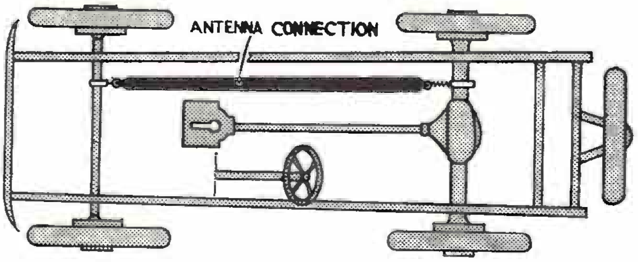

Fig. 10—Attachment of Under-Slung Antenna

Plate Antenna

There are a number of plate antennae on the market at the present time. In general, this type of antenna is not satisfactory and should be used only if no other type of antenna can be installed. The plate antenna generally consists of a metal plate, 2′ to 3′ long, suspended under the running board and attached to the running board by insulators, 2″ to 4″ long. The plate may also be suspended from the channel frame of the car by means of insulating mountings. The lead-in is brought up to the chassis in such a manner as to avoid the car ignition wires as much as possible.

Wiring

After all units have been installed, the cable wiring can be completed. In Fig. 11 is shown the complete wiring diagram. "B" batteries are shown. The proper connections for a "B" eliminator are shown in Fig. 8. CAUTION—Do not turn set on until all wiring connections are completed.

Note that there are four shielded cables from the cable head of the chassis. One of these goes to the control box. Put the cable head in place on the chassis temporarily and fasten this cable to the dash and steering column. Extending from this cable is the shielded "A" lead which goes to the "hot" "A"

MONTGOMERY WARD & CO.

connection on the battery or to the relay, when a "B" eliminator is used. When making this connection, be sure that the grounded shield does not short to the "hot" "A" terminal. The "A" lead should be as short as possible.

The speaker cable, the antenna lead, and the "B" cable are connected to their respective units. If any of these leads are too long they may be cut to length. All shields should be well grounded at both ends, generally to the case or the frame of the unit to which they are connected.

The shield on the speaker cable is grounded to the screw adjacent to the speaker terminal strip as shown in Fig. 11. If the shield pig-tail is too long, cut it short before making the connections in order to keep it from shorting out any of the speaker terminals. In the case of the "B" eliminator installation, keep the "B" cable as far as possible away from the "A" cable and all "A" connections. If the "B" battery lead must go under the car, cover it with the piece of loom supplied, to keep out moisture and to prevent the shield from rattling against the car body. In a "B" eliminator installation, ground the "B" cable shield to the "B" eliminator box.

The antenna cable should run up behind the instrument panel and directly over the point where the aerial lead-in comes in. The lead-in wire should be as short as possible. When connecting the aerial lead from the set to the lead-in wire from the antenna, be sure that neither of these two wires touches the grounded shield.

The shield of the antenna lead must be well grounded at the antenna end to the nearest convenient point on the chassis or metal portion of body.

Trying Out the Set and Adjusting

After the wiring has all been completed and before the chassis is permanently installed, insert the tubes, try out the set, and adjust the antenna trimmer condenser. The tube location is shown in Fig. 11. Put one of the rubber bands around each tube. Do not start the engine of the car.

To adjust the antenna trimmer, tune in a weak signal at the high frequency end of the dial with the manual volume control about ¾ on. *On one end of the chassis box is a small metal plate.* Remove the two screws holding this plate. Directly under the hole in the chassis box is the antenna trimmer condenser screw. Turn this adjusting screw up or down until maximum output is obtained.

If the receiver does not work, check the "A" and "B" voltages. CAUTION—These voltages should be checked only at the sockets in the receiver or at the "A" and "B" units. Do not check the voltages by removing the cable head and reading them at the multi-point socket. The reason for this is that if the switch is turned on and off with the multi-point socket not connected, the pilot light lamp may be burned out, due to the inductive surge caused by the speaker field. ALWAYS have the multi-point socket in the cable head inserted and all connections completed before turning the switch on or off.

Suppression of Ignition and Generator Noise

After the receiver is in satisfactory working order, start the motor and note the amount of noise. As a general rule, spark plug suppressors, a distributor suppressor and a ½ mfd. condenser on the generator are all that is required for the reduction of ignition and generator noise. If these items do not reduce the noise sufficiently, other measures as described below are required.

One spark plug suppressor is required for each plug. The method of mounting is shown in Fig. 13. Remove the wire from the top of the plug, put the suppressor on, and attach the wire to the top of the suppressor.

A distributor suppressor is put in the high tension lead, between the coil and the distributor head. Position "C," Fig. 13, on the distributor head is the most satisfactory and most commonly used point of mounting. If this is not practical, the high tension line may be cut *close to the distributor head* and the distributor suppressor with wood screw ends inserted in the line as shown in position "B."

The ½ mfd. generator condenser is installed as shown in Fig. 13. The lead from the condenser goes to one side of the cut-out connection on the generator. The mounting clamp grounds the other side of the condenser.

After the above procedure has been followed, again start the motor. If noisy operation persists, a number of steps can be taken and the various suggestions as given can be tried until the noise is satisfactorily reduced.

Try two suppressors in the high tension line, one at the coil end in addition to one at the distributor end, position "C," Fig. 13.

Ground all cables and tubing which pass through the dash, such as oil lines, gas lines, etc. Ground to the dash or at the nearest convenient point on the frame with a good short ground connection. Use the left-over shield from the "B" battery lead for this purpose.

If the chassis and coil are both in back of the dash (under the cowl), take off the coil and mount it on the front of the dash (in the engine compartment). If the coil cannot be moved, place a copper can over it and ground the can at the coil mounting.

Clean and respace spark plugs—clean and check distributor points—check distributor condenser.

In some cases, the high and low tension leads between the coil and distributor are run close together. In some cases they are in the same conduit. If this is the case, remove the low tension lead from this conduit. In any event, keep the high and low

MONTGOMERY WARD & CO.

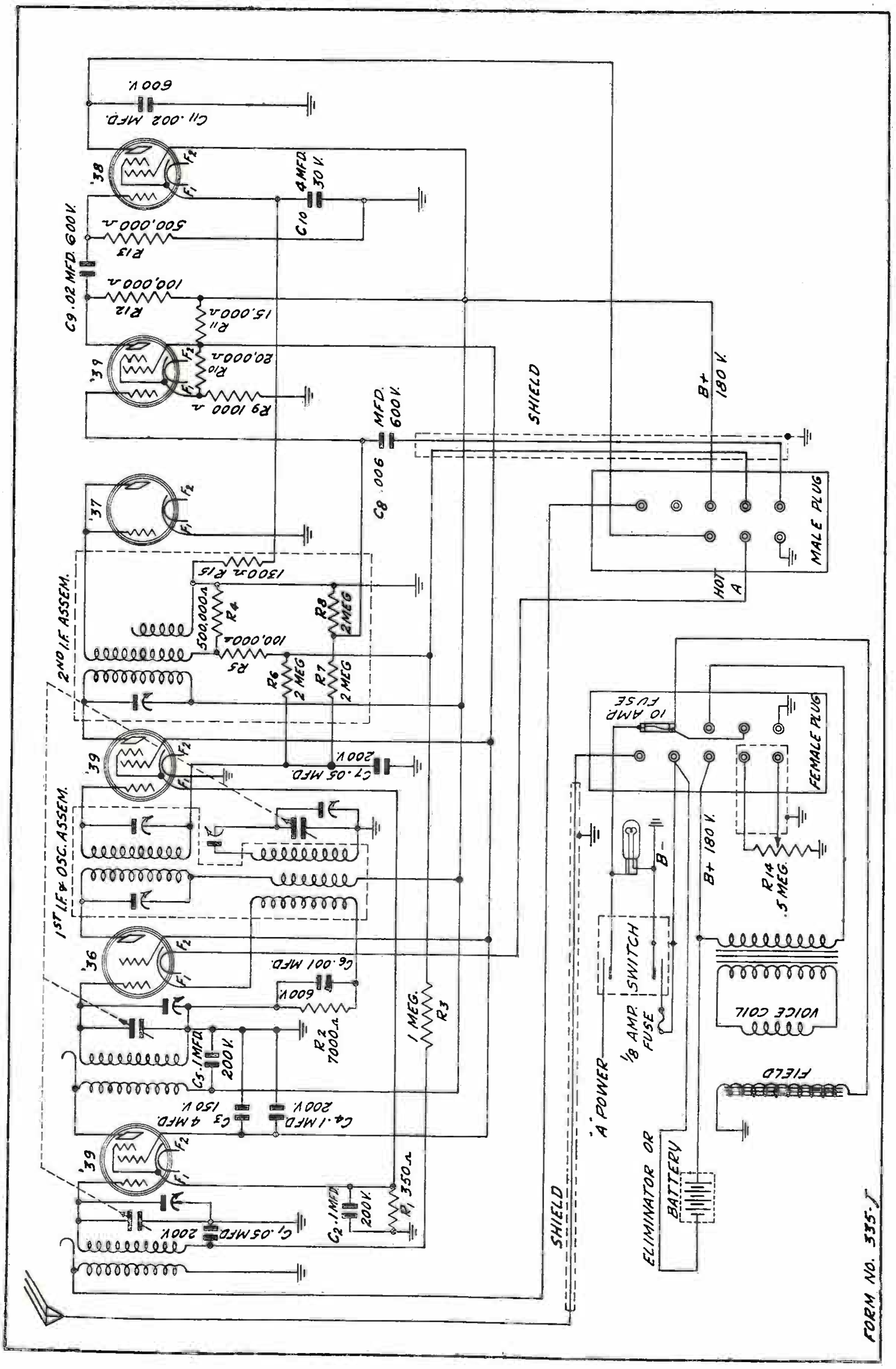

Fig. 12—Schematic Circuit Diagram

MONTGOMERY WARD & CO.

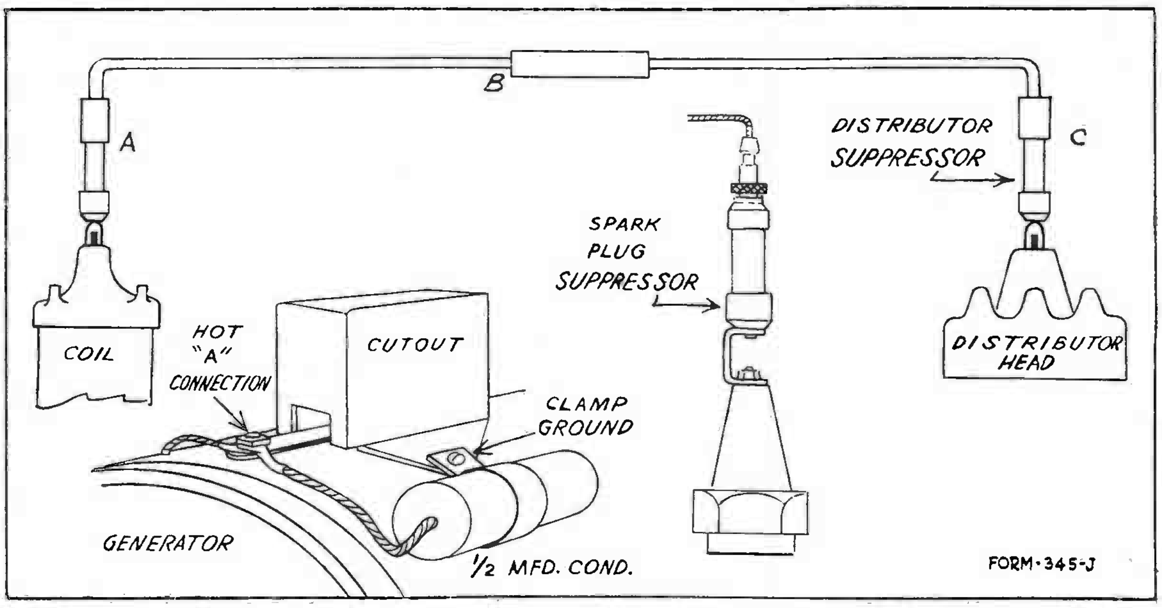

Fig. 13—Installation of Suppressors and Condenser

tension leads as far apart from each other as possible. Shield and ground the high tension lead, if separating the two leads is not sufficient. Then try also shielding the low tension lead.

A .5 mfd. condenser is necessary in some cases between the low tension lead terminal on the coil and ground. In other cases, this condenser might be harmful. It can be tried out, however, experimentally.

In some instances it will be helpful to connect a generator condenser from the dome light wire at the terminal block on the dash to the ground.

Noise, on occasion, may be due to weak pickup caused by a poor antenna. The action of the automatic volume control, due to the low pickup, causes the set to operate at maximum sensitivity, thereby increasing noisy reception, due both to external pickup and internal conditions.

Noisy operation is also caused in some instances by loose parts in the car body or frame. These loose parts rubbing together affect the grounding and cause noises, due to the rubbing or wiping action. Tightening up the frame and body at all points, and in some cases, the use of a copper jumper will eliminate noise of this nature.

Noise may also be due to the "B" eliminator. Keep the eliminator as far away from the receiver and lead-in as possible. Also, ground the case. The eliminator can cause hum if the filters are defective or high frequency energy can be radiated directly from the case.

Be sure there are no loose lights or wiring.

Care and Maintenance

Advancing Generator Charging Rate

The installation of the automobile radio imposes an additional drain on the car storage battery. This can be compensated for by advancing the charging rate of the car generator. Check the state of charge of the storage battery about a week after the installation of the automobile radio is made and adjust the charging rate accordingly.

Tubes

The type of tubes used and location of these tubes in the chassis are shown in Fig. 10. These tubes are designed especially for auto receivers. Most of them, under normal usage, will last for many months and in some cases, years. Some of them, however, may become faulty after a few months of operation.

For that reason, try out a new set of tubes periodically, inserting them in the receiver one at a time and noting any difference in performance.

Fuses

Two fuses are used on this receiver. One for the "A" line and one for the "B" line. As shown in Fig. 10, the "A" fuse is a 10 amp. fuse and is located on the multi-point socket. The "B" fuse is a ⅛ amp. fuse and is inside of the control unit.

To change the "B" fuse it will be necessary to remove the cover of the control box, and to change the "A" fuse it will be necessary to take the cable head off the chassis. Be sure that the switch is off when changing fuses.

Pilot Lamp

The pilot lamp is a standard six-volt No. 40 lamp. To replace the lamp, remove the cover of the control unit. The bottom portion of the box will now drop away as far as the leads will permit. The light socket clip and lamp can then be easily removed by first removing the dial which is held by one screw in the center.

MONTGOMERY WARD & CO.

"B" Eliminator or "B" Batteries

The voltage of the "B" eliminator should be checked occasionally with a high resistance voltmeter. The tube in the "B" eliminator may burn out after three to nine months' use. If the eliminator is of the rotating type, the bearings will require oiling periodically.

If four 45 volt "B" batteries are used for the "B" supply, these will run down after two to five months, depending on the amount the set is operated. When the voltage of a battery drops below 30 under load, a new one should be purchased.

Electrical Condition of Car

Dirty spark plugs, incorrect spacing of distributor points, faulty distributor condenser, and various other items in the car electrical system can cause noisy operation. If the customer complains of noise in the receiver after it has been in use for some time, check the items mentioned as well as other parts of the car electrical system for poor connections, grounds, and other faults which may be responsible for the noise.

Keep Units Dry

Caution the customer, when having the car washed, to avoid getting the chassis and "B" battery box or "B" eliminator water-soaked. Water getting into these units may cause damage and deterioration and, in some cases, a short circuit. Driving the car through an excessive amount of mud or water may bring about the same result.

Circuit

The circuit consists of an antenna stage, a '39 R. F. stage, a '36 Detector-oscillator stage, a '39 I. F. stage, a '37 diode detector stage, a '39 first audio stage, and a '38 output stage.

The intermediate frequency is 262 K. C. The diode current establishes a drop across a resistor network, which is used as an additional bias voltage on the R. F. '39, I. F. '39, and audio '39 tubes, giving automatic volume control action.

The full control voltage is supplied to the R. F. tube, two-thirds to the I. F. tube, and one-third to the audio tube. As the signal increases in intensity, the applied control voltage is increased, thus giving uniform output as set by the manual volume control. The manual volume control varies the diode audio voltage applied to the first audio tube.

An electrodynamic speaker with the field energized by the six-volt car battery is used. Power for the receiver is obtained from the car storage battery and from a "B" eliminator or from "B" batteries. The tone control is mounted on the speaker. The tubes used are the new six-volt tubes especially designed for automobile radio receivers.

Voltages at Sockets

In the following chart are given the voltages at the sockets. Before checking the voltages at the sockets, a convenient point, in some cases, to check the applied "A" and "B" voltages is at the speaker terminal strip. A high resistance voltmeter should be used.

CAUTION—Do not check the "A" and "B" voltages at the multi-point socket on the cable head, as the pilot light may be burned out when the switch is turned off. This is due to the high inductance of the speaker field, which will increase the voltage at the break of the circuit. Also, when the cable head and multi-point socket is taken off, the connections between the chassis and power unit are open so that readings are not made under load conditions.

To read the voltages at the sockets, the chassis box, in most cases, will have to be taken off of its mounting. In some instances, the cables, which may be attached to the dash or at other points, will have to be taken off. The voltages can be read at the sockets with a long plug or with a pair of long, insulated test prods. If these are not available. it will be necessary to remove the chassis from the box. The multi-point socket on the cable head is then re-connected to the multi-point plug on the chassis. Considerable care must be taken when the chassis is out of the case in this manner to prevent accidental short circuits of plus "B" or plus "A" points to ground.

All tubes must be inserted and all units connected. A signal will effect the control voltages on the R. F., I. F., and first audio tubes. If signals are received, ground the antenna and remove the second detector tube to make the other readings.

Type of Tube	*Function*	*Across Heater*	*Plate to Cathode*	*Screen to Cathode*	*Grid to Cathode*	*Normal Plate MA*
'39	R. F.	6.	177	80	3	3.6
'36	1st Det.	6.	173	76	7(1)	.9(1)
'39	I. F.	6.	177	80	3	3.6
'37	2nd Det.	6.	0		0	0
'39	1st Audio	6.	54	77	6	1.2
'38	Output	6.	159	165	15.5	10

(1) Will vary with dial setting.

NOTE: All bias voltages must be read from cathode to ground.

OZARKA, Inc.

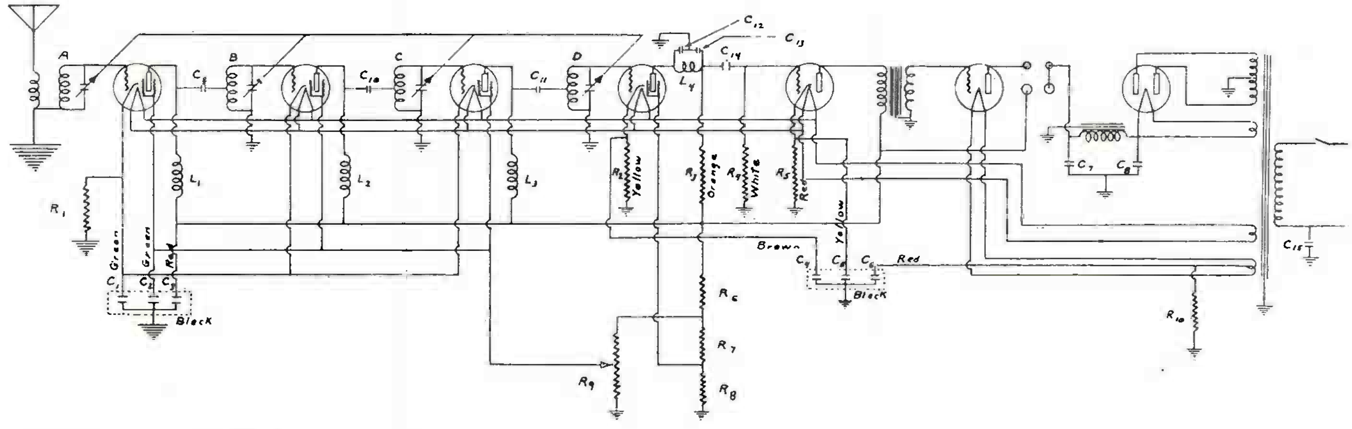

C1-.25 } RF By Pass
C2-.25
C3-1.0
C4-.25 } AF By-Pass
C5-.1
C6-.5
C7-8.0
C8-8.0
C9-.0001
C10-.0001
C11-.0001
C12-.001
C13-.001
C14-.005
C15-.005

R1-.225 ~
R2-40,000 ~
R3-350,000 ~
R4-1 Meg ~
R5-2000 ~
R6-5000 ~
R7-5000 ~
R8-5000 ~
R9-10,000 ~
R10-1600 ~

THE
VIKING
MODEL 92-AC

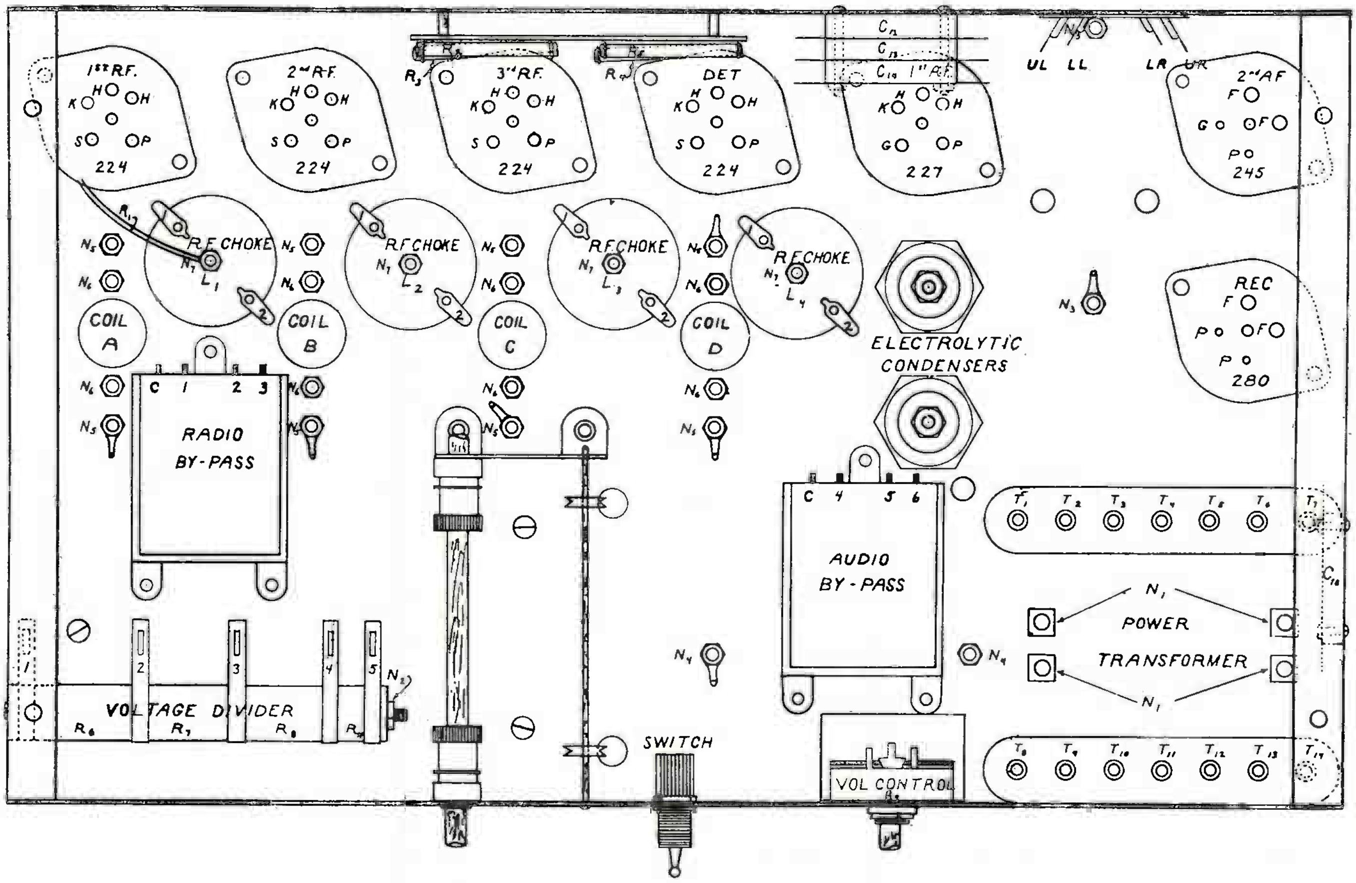

OZARKA, Inc.

MODEL 93 A

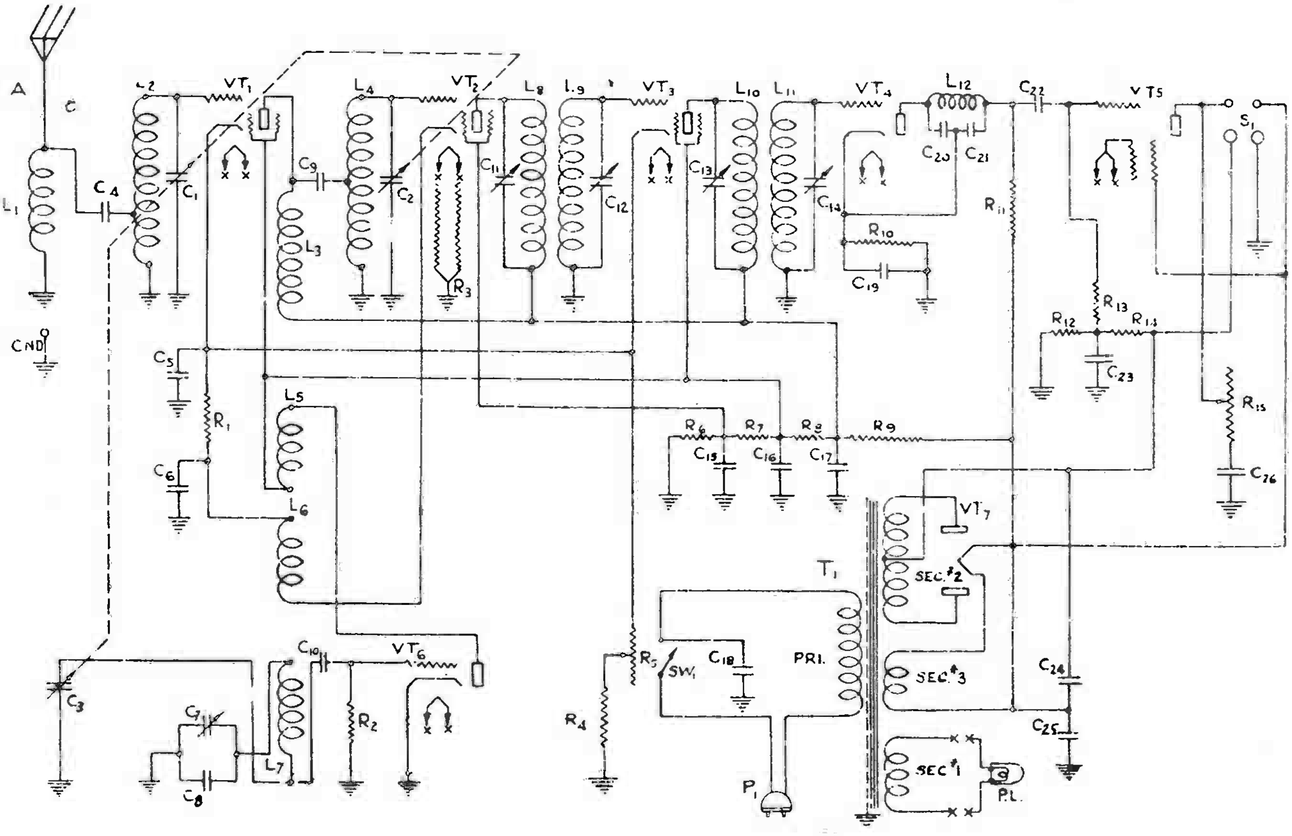

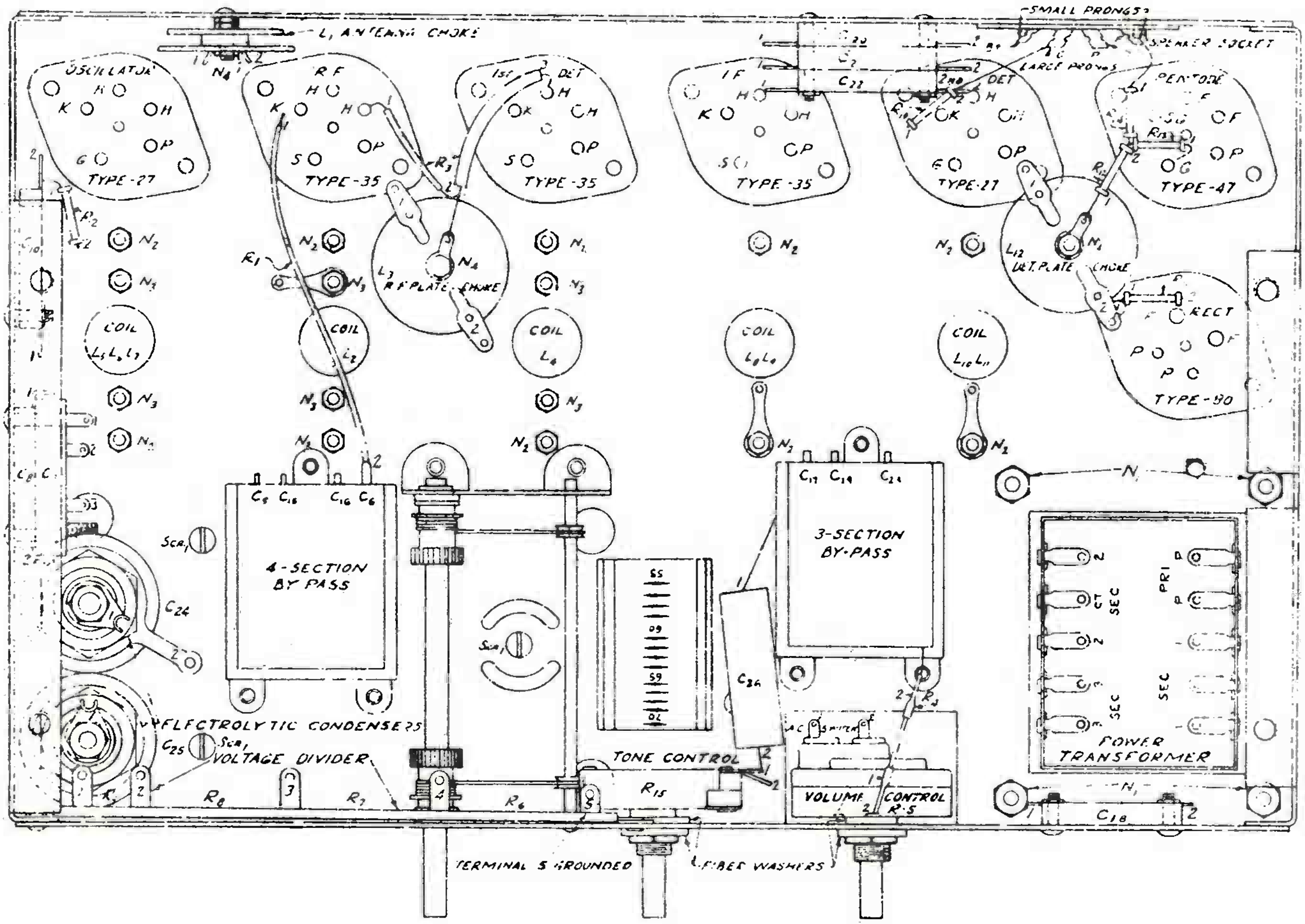

OZARKA, Inc.

Service Outline Model 93-A

This service outline is written around the Jewell, Pattern 574 Volt-Ohmmeter.

Do not overlook the fact that, nine times out of ten, when any trouble develops in your instrument it can be traced directly to a tube. Bear in mind too, that a tube tester will no show up trouble which may arise in a tube. Therefore, we strongly recommend that you have on hand at least one tube of each type used in the instrument as a spare.

Bear in mind when you use the meter as a continuity tester or an ohmmeter the instrument should be entirely disconnected from the electric light circuit or serious damage to the meter will be the result.

To test voltages or to take a continuity reading of your instrument it will be necessary, of course, to remove the chassis from the cabinet or console.

To do this you will remove the control knobs by loosening the set screws. Next the four bolts that hold the chassis to the base of the cabinet will be removed.

In some tests it, of course, is necessary to have the speaker connected to the instrument and that means the speaker too must be removed from the cabinet or console.

To remove the speaker it will be necessary to remove the four screws or nuts that hold the speaker to the baffle board.

STANDARD COLOR CODE

To Determine the Value in Ohms of a Resistor

1—Brown
2—Red
3—Orange
4—Yellow
5—Green
6—Blue
7—Lavender
8—Gray
9—White
0—Black

Color of body of resistor will be first figure.
Color of end of resistor will be second figure.
Color of dot or circle on body will be Number of Ciphers.

Example: We have a red resistor with a green end having a yellow dot on the body. The first figure will be 2, the second 5, and theer will be 4 ciphers, therefore, the value of the resistor is 250,000 ohms.

To Determine the Capacity of a Condenser

Pink	.00025	Blue	.00015
Yellow	.00005	Green	.003
Red	.006	Purple	.00075
Orange	.0008		

THINGS THAT MAY GO WRONG AND WHERE TO LOOK TO CORRECT THEM!

Tube Flickers	Defective Tube.
Instrument Cuts Off	Defective Tube. Poor connection in Chassis or Speaker.
280 Plates Red Hot Hum—No Signals	Short in B Circuit. R_3 Open to Ground. G of Speaker Socket Not Grounded.
All Plate Voltage Low	G of 247 (Pentode) Grounded. G of Speaker Socket not Grounded. Speaker Field Open C_{26} Shorted.
Hum—Signals Weak	Center Tap of High Voltage Winding of Power Transformer Grounded. C_{24} Shorted to Ground by Metal Splinter.
Reception Weak	Poor Connection in Chassis. C_{15} or C_{16} Opened. Poor Tubes. C_{20} or C_{21} Shorted. Voltage Divider Open. L_2 Open.
Fading	Defective Contact inside of Tube. Poor Connection in Chassis. Atmospheric Conditions.
Noisy Reception	Defective Tube. Poor Connection. Static. Local Interference.
No Plate Voltage	280 Defective. Broken Wire in Chassis.
No Screen Voltage	Open Voltage Divider. C_{16} Shorted.
No Reception when Tone Control on Low	C_{26} Shorted.
Oscillation	3 Section By-pass. Condenser Open.
All Plate Voltages High	C_{24} Shorted to Ground by Metal Splinter. Speaker Field Shorted. Center Tap of High Voltage Grounded.
Reception Weak 550 to 720 K.C. OK 720 to 1500 K.C.	L_1 Open.
Noisy when Tuning from	Spring Tensions on Rotor Shaft of Gang Condenser loose.
Station to Station	Plates of Gang Condenser Scraping. Dirt between Plates of Gang Condenser.
No Control Over Volume	Defective 235 Tube.

Disconnect wire leading from R_9 to the two electrolytic condensers. Chassis on work bench upside down. All tubes removed. Speaker disconnected.

Instrument disconnected from light socket. Volume Control set at maximum.

One terminal of ohmeter on ground (base of chassis) on all test below.

Second terminal of ohmeter on various terminals as listed below.

OZARKA, Inc.

1st Terminal of Ohmeter	2nd Terminal of Ohmeter	Part Being Tested	Ohms	Probable Trouble if Improper Reading is Obtained
Base	1	Voltage Divider	16,600	Voltage Divider Open
Base	1	R_4	80	R_4 Open
Base	2	C_{24}	Very Slight Indication	Terminal 2 of C_{24} Shorted to ground by metal splinter
Base	Antenna Wire	Antenna Choke	10	Antenna Choke Open
P	P	Power Transf.	10	Open Primary
1	1	Power Transf.	0	....
2	2	Power Transf.	150	High Voltage Secondary Open or Short
2	CT	Power Transf.	75	High Voltage Secondary Open or Short
2	CT	Power Transf.	75	High Voltage Secondary Open or Short
3	3	Power Transf.	0	5 Volt Winding Open
1	2	C_{26}	No Reading	C_{26} Short
1	2	L_3	70	L_3 Open
1	2	L_{12}	110	L_{12} Open
1	2	R_{15}	0-25000 as rotated	Open or Shorted
1	2	R_5	0-9000 as rotated	Open
1	2	Switch	Off position no indication on position 0 Ohms	Switch Defective
Base	Control Grid Cap R.F. Tube	Grid Winding Antenna Coil	3	L_2 Open
Base	Control Grid Cap 1st Det.	Grid Winding R.F. Coil	3	L_4 Open
Base	Control Grid Cap I. F. Tube	Secondary Winding I.F. Trans.	55	L_9 Open

Tube	Terminal on Socket	Approx. Ohms	Probable trouble if Incorrect Reading is obtained
Oscil	K	0	Poor Connection to Ground
Oscil	G	100,000	R_2 Broken
Oscil	P	9,000	L_5 Open. 4 Section By-pass Condenser Shorted. Voltage Divider Open
R. F.	K	80	R_1 Open. C_5 C_6 Shorted. R_4 R_5 Opened
R. F.	S	9,000	Voltage Divider Opened. 4 Section By-pass Shorted
R. F.	P	15,000	L_5 Open. C_9 Short. Voltage Divider Open. 4 Section By-pass Shorted.
1st Det	K	475	C_5 C_6 Short. L_8 Open. R_1 R_4 R_5 Open
1st Det	S	4,750	Voltage Divider Open. 4 Section By-pass Short
1st Det	P	15,000	L_8 Open. C_9 Short. Voltage Divider Open. 4 Section By-pass Shorted
I. F.	K	80	R_4 R_5 Open. C_5 C_6 Short
I. F.	S	9,000	Voltage Divider Open. 4 Section By-pass Shorted.
I. F.	P	15,000	L_{10} Open. C_9 Short. 4 Section By-pass Shorted
2nd Det	K	40,000	C_{19} Short. R_{10} Open. C_{20} C_{21} Grounded. Mounting Screw
2nd Det	G	60	L_{11} Open. Plates of C_{14} Scraping
2nd Det	P	100,000†	L_{12} Open. C_{20} or C_{21} Shorted. R_{11} Open. Voltage Divider Open
Pentode	G	No Reading	C_{22} Short
Pentode	SG	16,600	Open Voltage Divider. Shorted 3 Section By-pass Condenser
Pentode	P	No Reading	C_{26} Short. R_{15} Grounded
280	F	16,600	Open Voltage Divider. Shorted 3 Section By-pass Condenser
280	P	No Reading	

OZARKA, Inc.

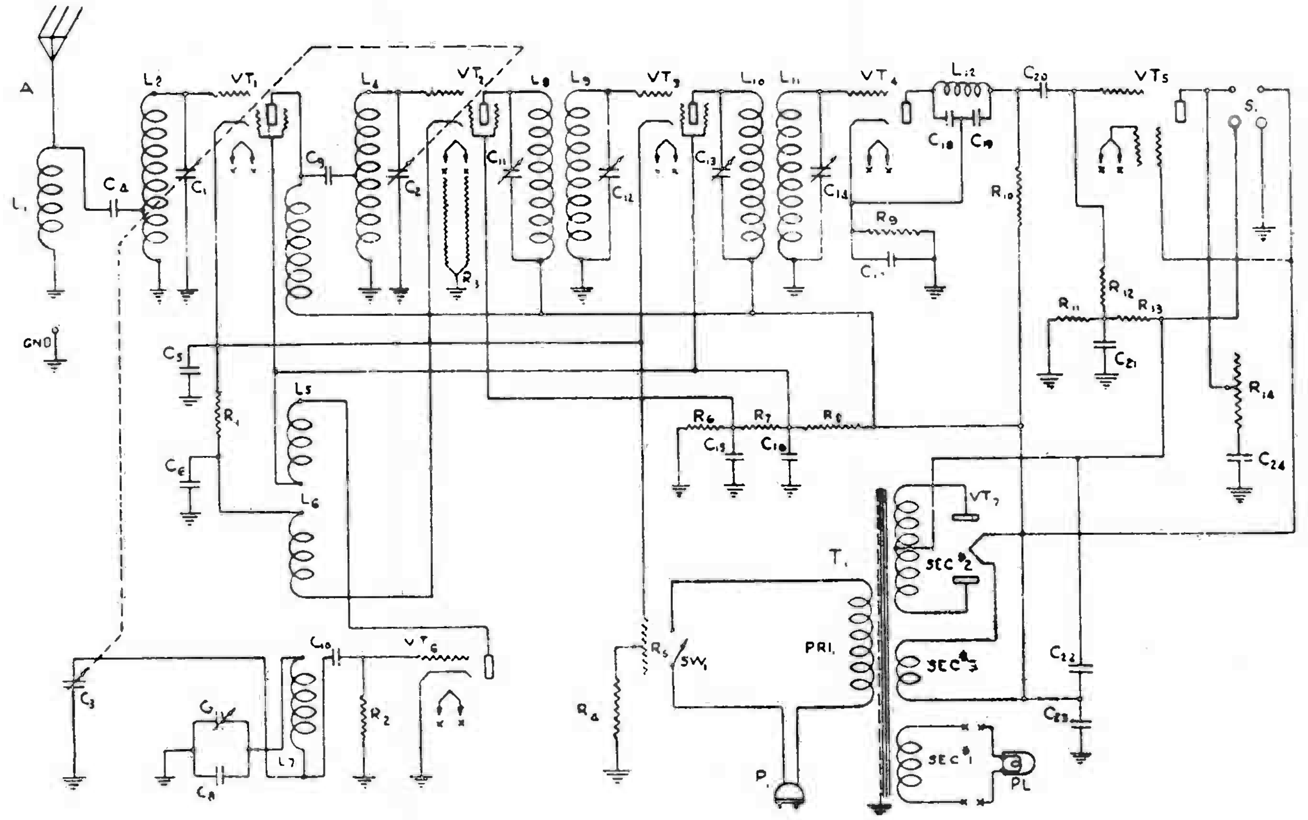

MODEL 93B WIRING DIAGRAM

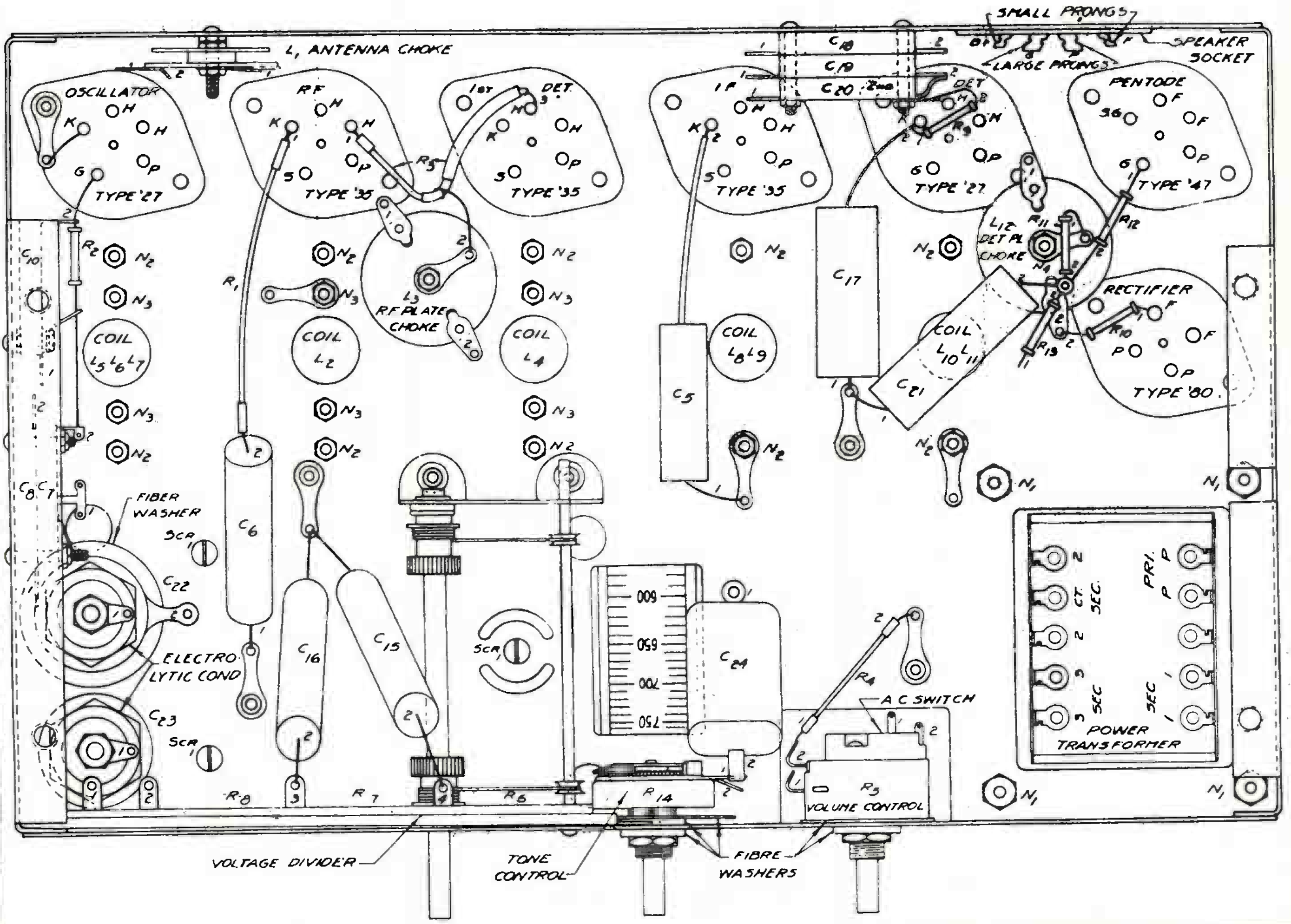

OZARKA, Inc.

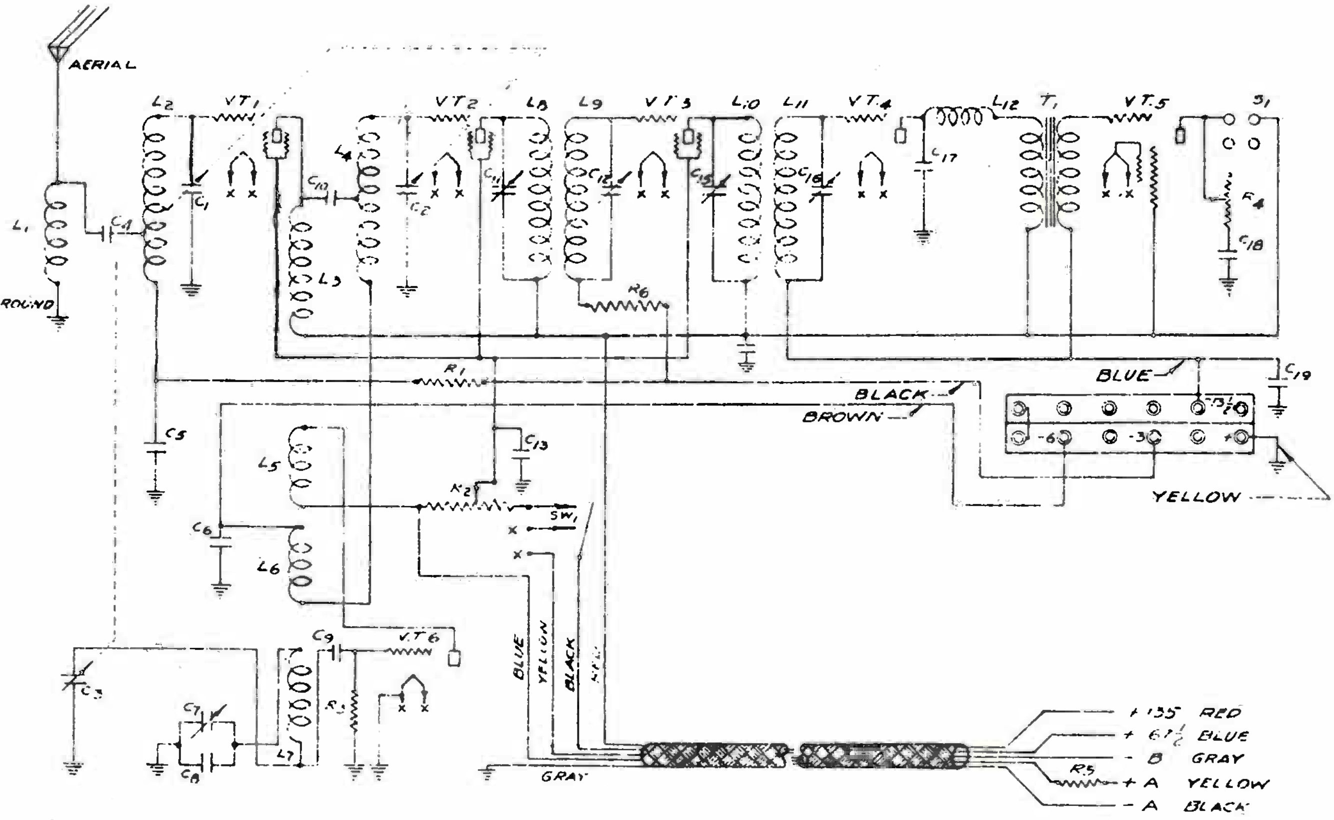

MODEL 93 BATTERY OPERATED CIRCUIT DIAGRAM

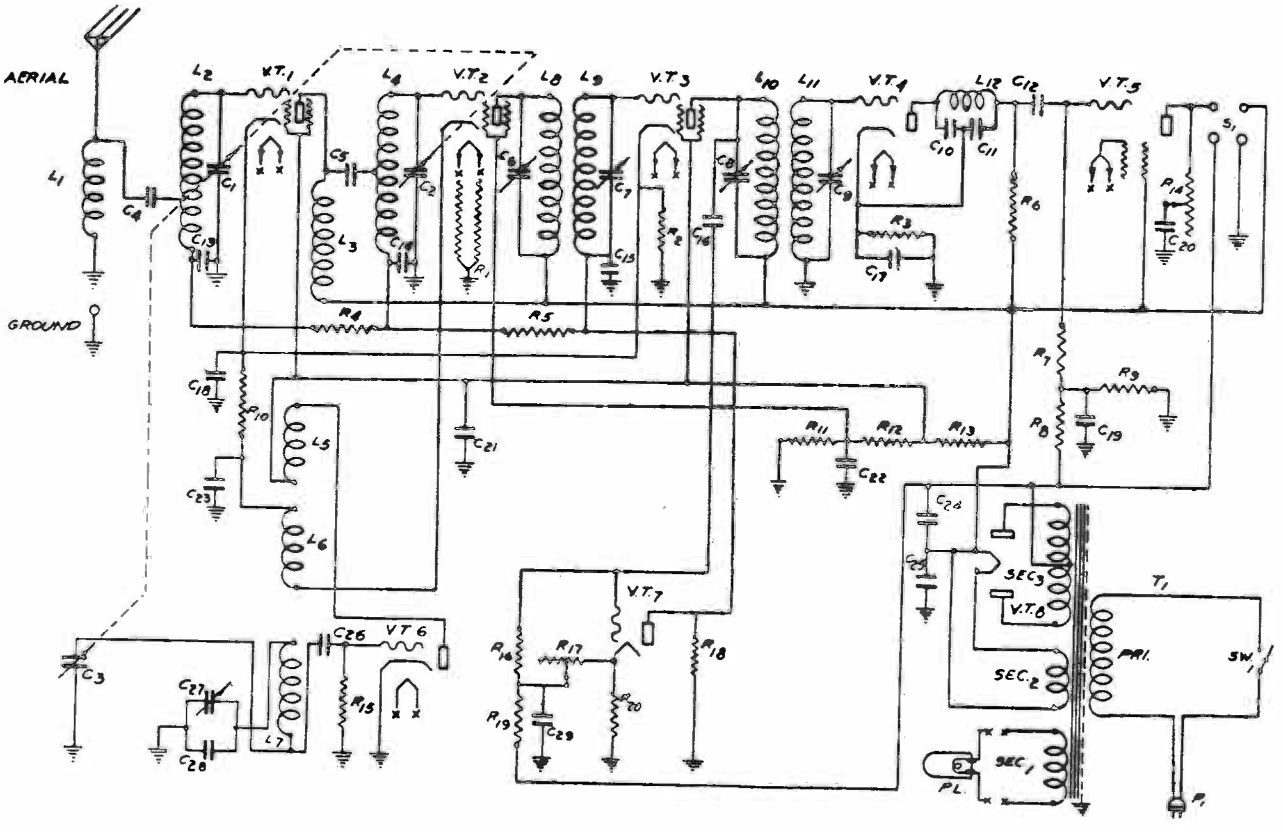

CIRCUIT DIAGRAM MODEL 94 A.V.C.

OZARKA, Inc.

SHORT WAVE CONVERTER CIRCUIT DIAGRAM

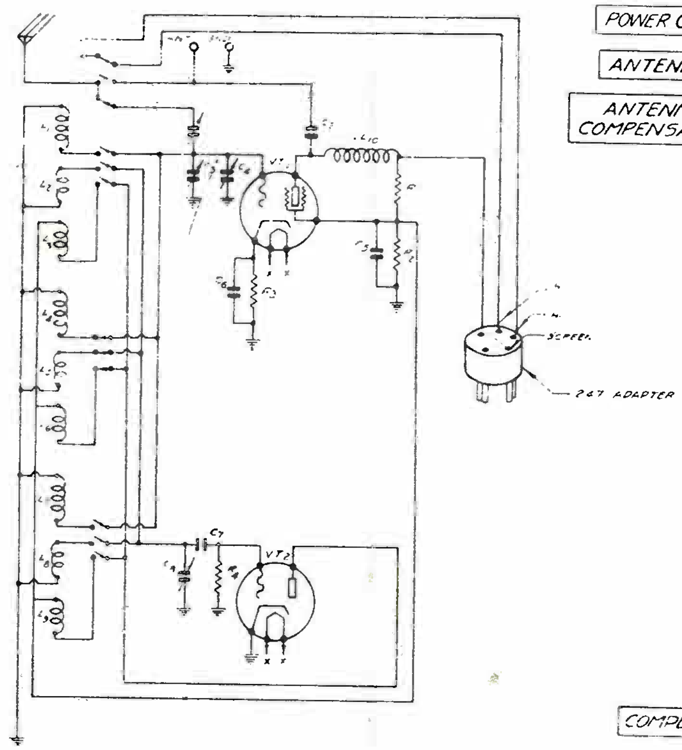

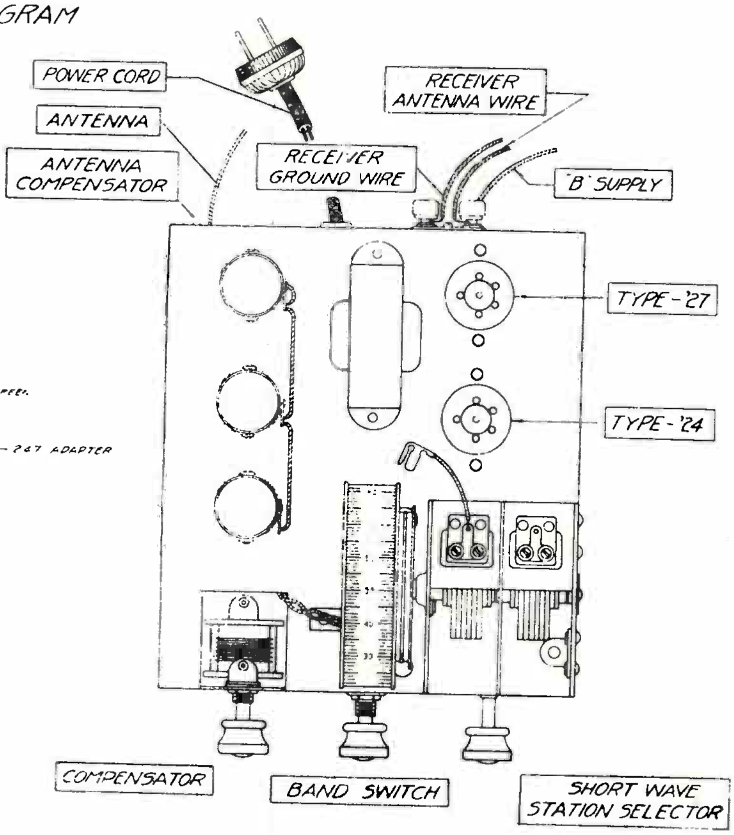

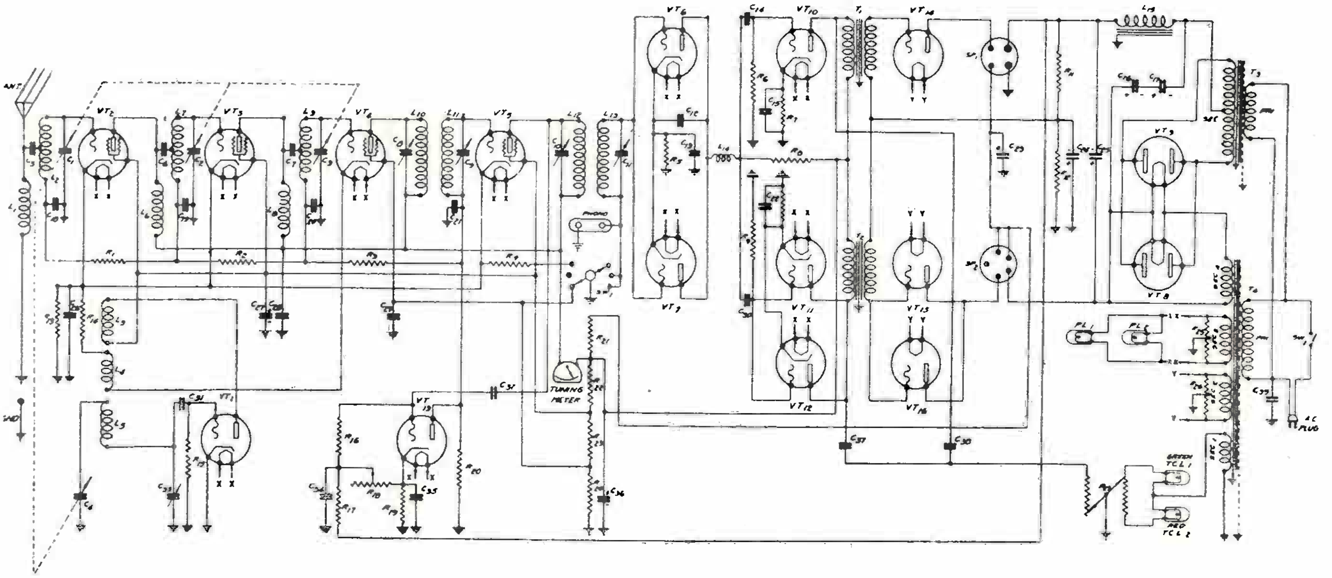

V16 CIRCUIT DIAGRAM

OZARKA, Inc.

TUBE LEGEND

SOCKET NO.	TYPE		SOCKET NO	TYPE	
1	'27	OSCILLATOR	9	'80	RECTIFIER
2	'35	1ST R.F.	10	'27	HIGH CHANNEL INTERMEDIATE AUDIO
3	'35	2ND R.F.	11	'27	LOW CHANNEL INTERMEDIATE AUDIO
4	'35	1ST DETECTOR	12	'27	
5	'35	I.F.	13	'27	AUTOMATIC VOLUME CONTROL
6	'27	2ND DETECTOR	14	'45	HIGH CHANNEL OUTPUT AUDIO
7	'27		15	'45	LOW CHANNEL OUTPUT AUDIO
8	'80	RECTIFIER	16	'45	

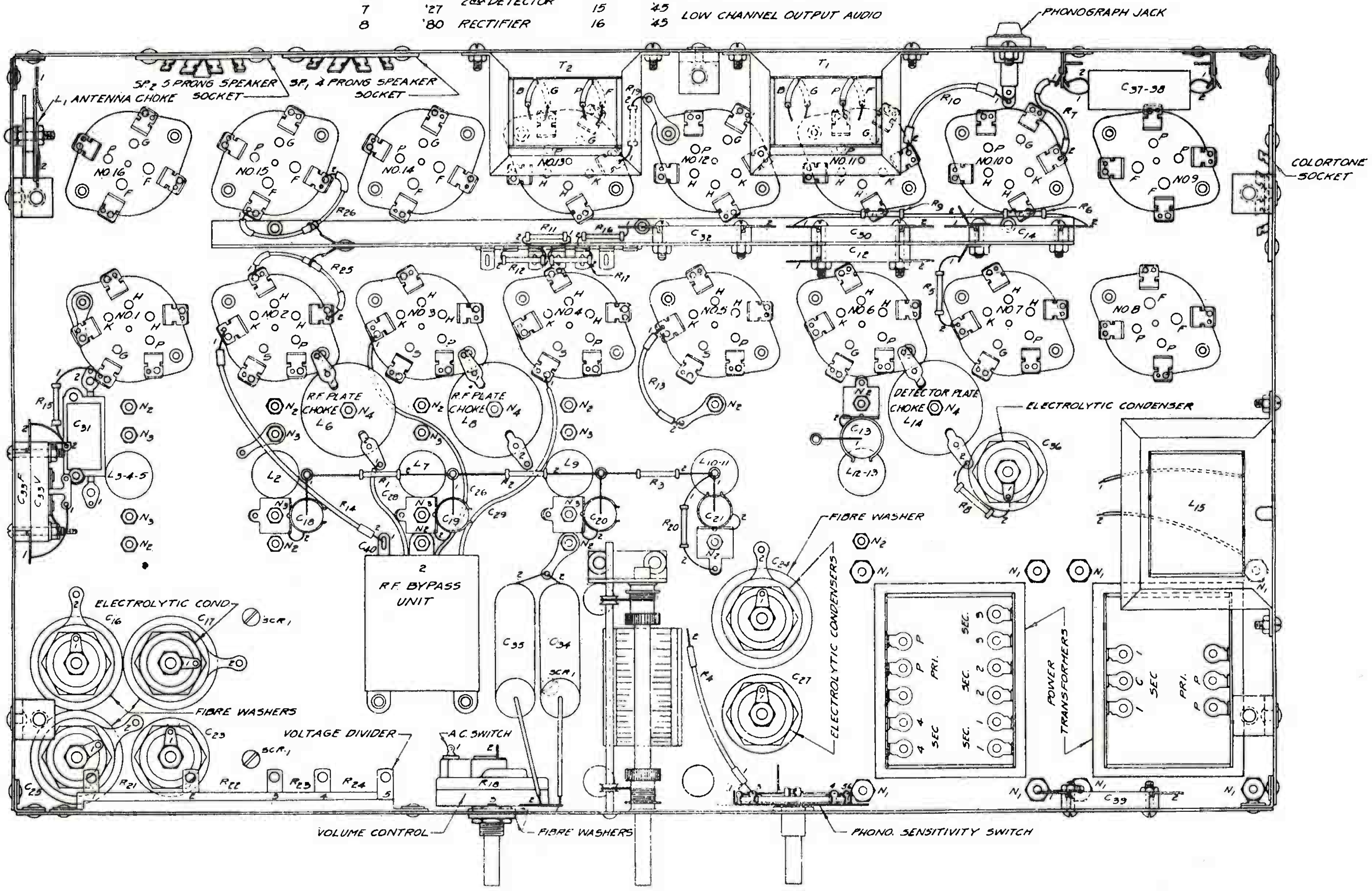

PHILCO RADIO & TELEVISION CORP.

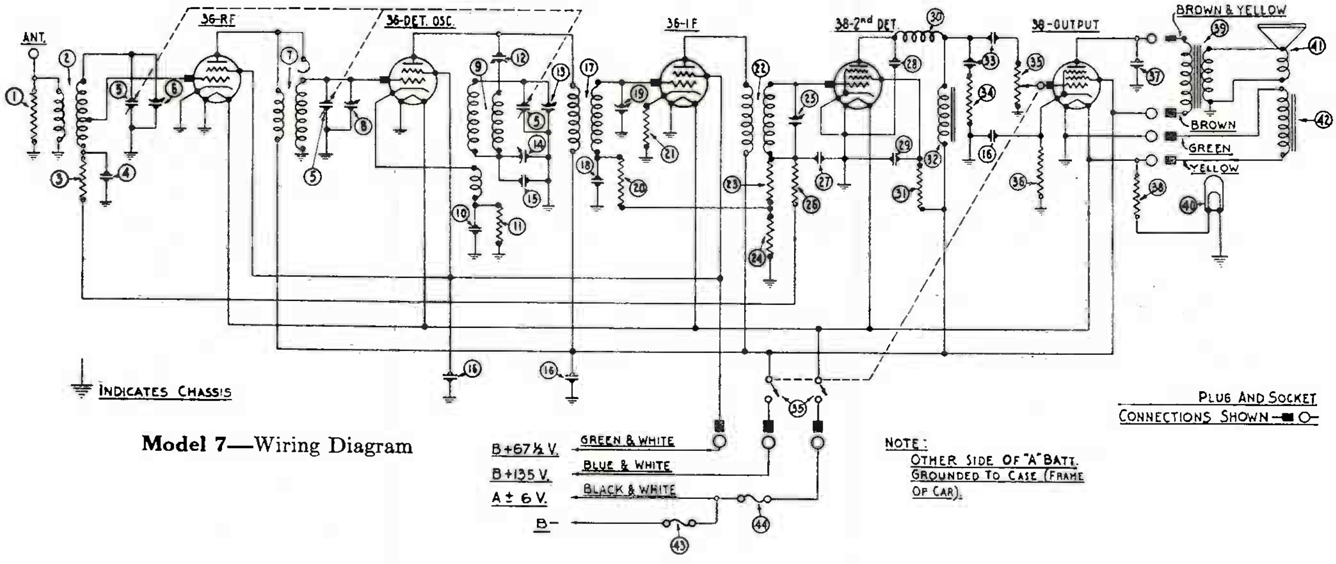

Model 7—Wiring Diagram

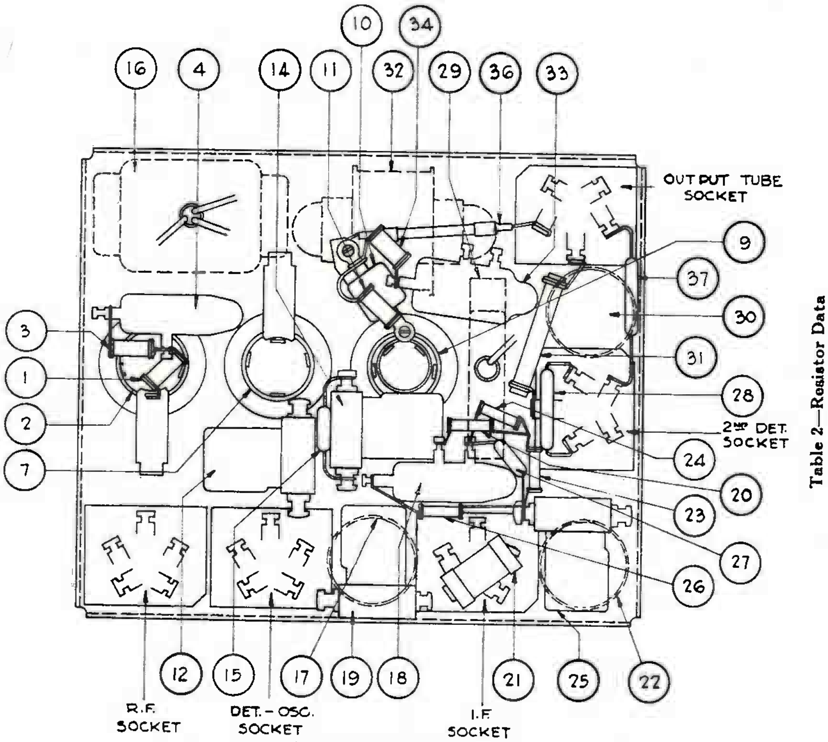

Model 7—Chassis

Table 2—Resistor Data

Nos. on Figs. 1 & 2	Resistance (Ohms)	COLOR		
		Body	Tip	Dot
㊳	7		Flat	
㊲	225		Flat	
㊱	1,250		Insulated Covering	
① ⑪	5,000	Green	Black	Red
㉛ ㉔	50,000	Green	Black	Orange
③ ㉓ ㉞	99,000	White	White	Orange
⑳ ㉖	490,000	Yellow	White	Orange

Table 3—Condenser Data

Nos. on Figs. 1 & 2	Capacity (Mfd.)	Color
㉗	.00025	Yellow
⑩ ⑮	.0007	White & Golden Yellow
㉙ ㊲	.002	Blue
㉕	.015	Black Bakelite
④ ⑬	.05	Black Bakelite
㉝	.25	Metal
⑯	.25, .5, 1.	Metal

Table 1—Tube Socket Readings

Tube		Filament Volts	Plate Volts	Control Grid Volts	Screen Grid Volts	Cathode Volts	Plate Milli-Amperes
Type	Circuit						
36	R.F.	6.0	129	0.0	61	0.0	2.8
36	Det.-Osc.	6.0	129	0.0	61	6.0	0.8
36	I.F.	6.0	129	0.0	61	0.5	2.0
38	2nd Det.	6.0	115	0.0	50	0.0	6.0
38	Output	6.0	125	0.0	129	11.0	6.0

All voltage readings taken to chassis with A+ grounded. Detector oscillator cathode readings taken with receiver tuned 550 K.C.

PHILCO RADIO & TELEVISION CORP.

Radio-Phonograph Model 22L

The Model 22L has the same radio chassis as the model 71-221 except for the additional wiring of the phonograph equipment.

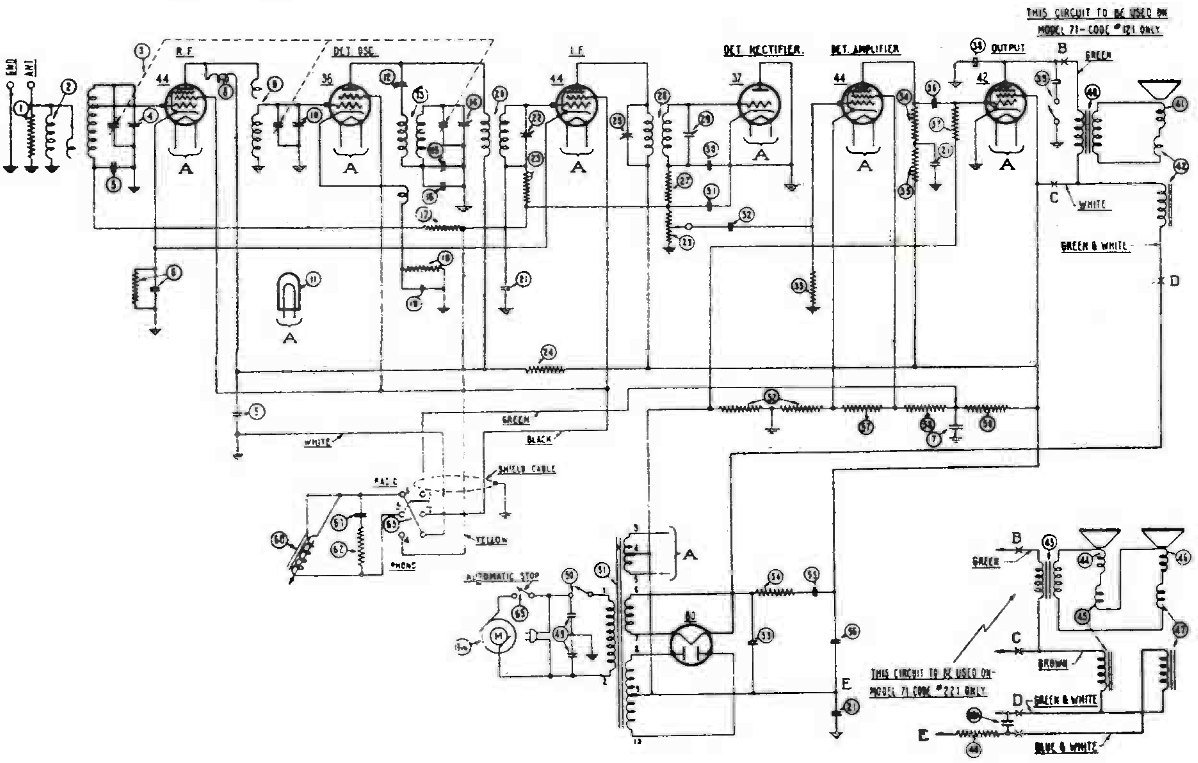

Radio-Phonograph Model 23X

The model 23X has the same radio chassis as the model 91-221 except for the additional wiring of the phonograph equipment.

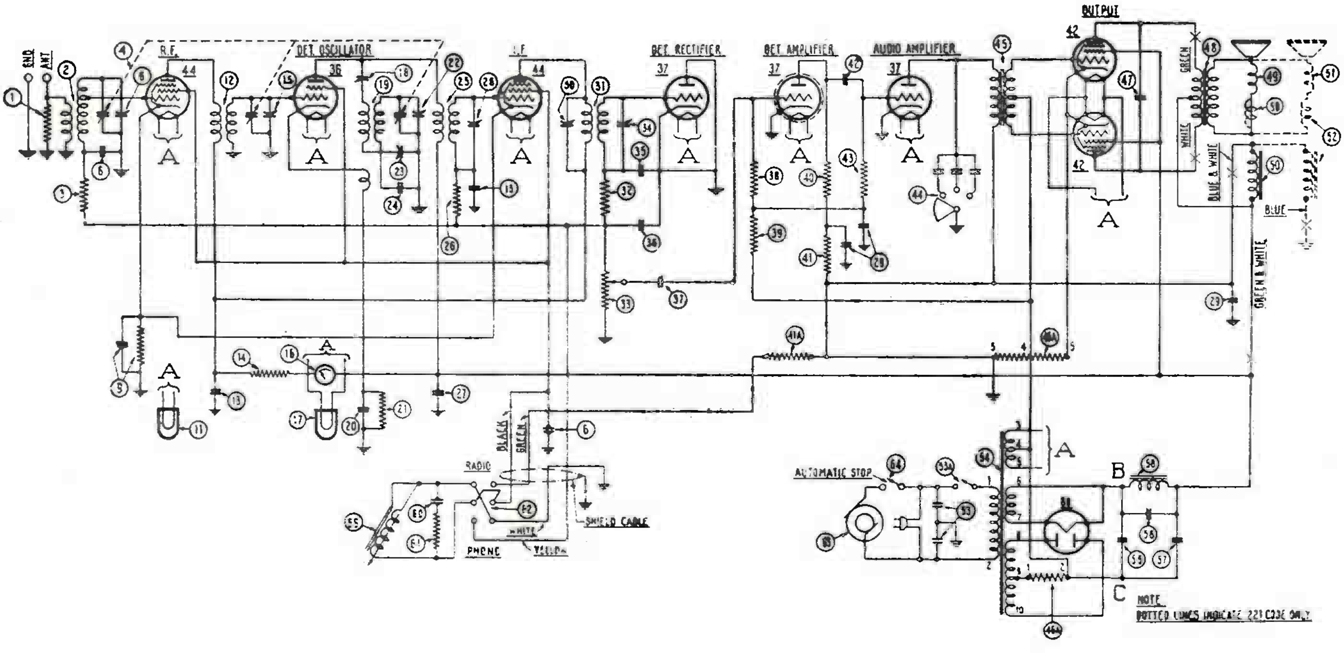

PHILCO RADIO & TELEVISION CORP.

Model 47 Series

The Philco Radio of the 47 series is an eight tube direct current (D.C.) superheterodyne, employing the high-efficiency 6.3 volt filament tubes, automatic volume control, and superpower push-pull pentode output. The chassis is made for operation on 115 volts D.C. and 230 volts D.C. The complete instrument is made in two different types, one known as the 121 code, employing a single dynamic speaker, and the other known as the 221 code employing twin dynamic speakers. These code numbers appear on the radio chassis as a part of the model number. Chassis of one code are not interchangeable with those of another. On the 230 volt models, a ballast lamp type 4 in series with one side of the power line is used on the single speaker models and a type 5 on the twin speaker models. The intermediate frequency used in adjusting the superheterodyne circuit of the 47 series is 260 kilocycles. The power consumption of the 115 volt models is 45 watts; that of the 230 volt models is 90 watts.

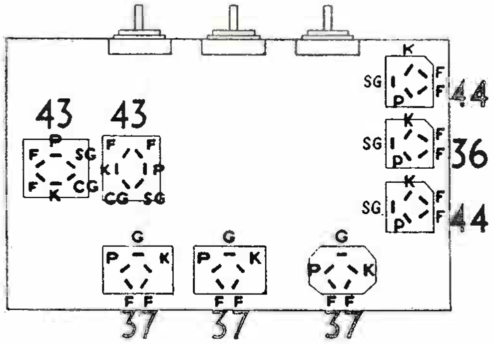

F = Filament
P = Plate
SG = Screen Grid
CG = Control Grid
K = Cathode

Tube Sockets

Table 1—Tube Socket Data*—D.C. Line Voltage 115 Volts

Tube		Filament Volts F to F	Plate Volts P to K	Screen Grid Volts SG to K	Control Grid Volts CG to K	Cathode Volts K to F
Type	Circuit					
44	R. F.	6.3	100	100	.4	40
36	Det.-Osc.	6.3	100	65	5.0	30
44	I. F.	6.3	100	100	.4	25
37	Det.-Rect.	6.3	0	....	.2	22
37	1st Audio	6.3	75	....	.4	2
37	2nd Audio	6.3	90	....	.4	10
43	{Push-Pull	25.	110	112	10.	80
43	{Output	25.	110	112	10.	80
4	Ballast (121) 230 Volts	110	...	....	....	....
5	Ballast (221) 230 Volts	110	....	....	....	....

*All readings were taken from the under side of the chassis, using test prods and leads with a suitable high resistance multi-range D.C. voltmeter for all readings. Volume control at maximum and station selector turned to low frequency end.

Table 2—Resistor Data

No. on Figs. 3 and 4	Resistance (Ohms)	Color		
		Body	Tip	Dot
㊴	70 & 16		Round Tubular	
㊺	5,000	Green	Black	Red
⑮	8,000	Gray	Black	Red
① ㊱	10,000	Brown	Black	Orange
㉒ ㊷	25,000	Red	Green	Orange
㉘	70,000	Violet	Black	Orange
㉛	99,000	White	White	Orange
⑥ ⑭ ㉕ ㉞ ㊸	1,000,000	Brown	Black	Green

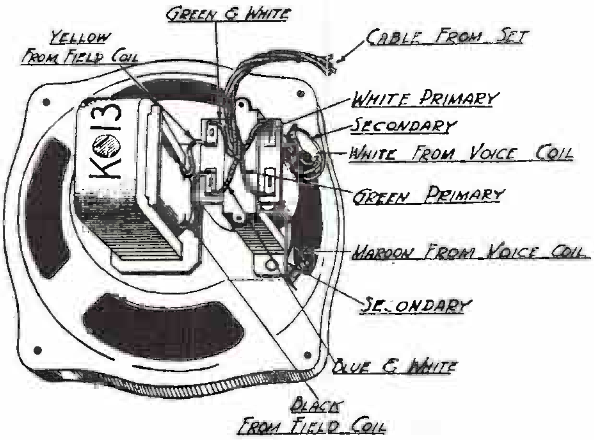

Fig. 1—Single Speaker Connections—121 Code.

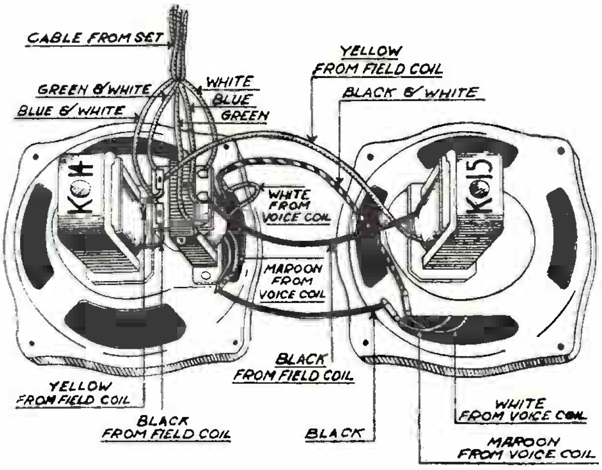

Fig. 2—Twin Speaker Connections—221 Code

PHILCO RADIO & TELEVISION CORP.

MODEL 47 SERIES

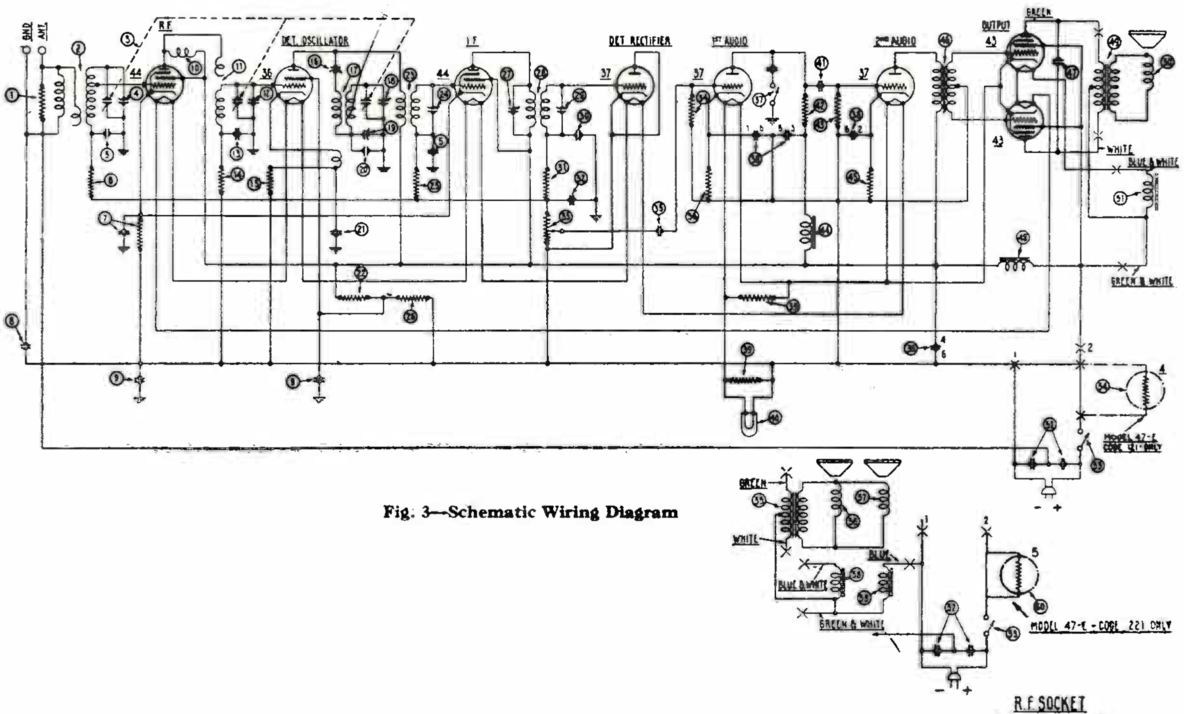

Fig. 3—Schematic Wiring Diagram

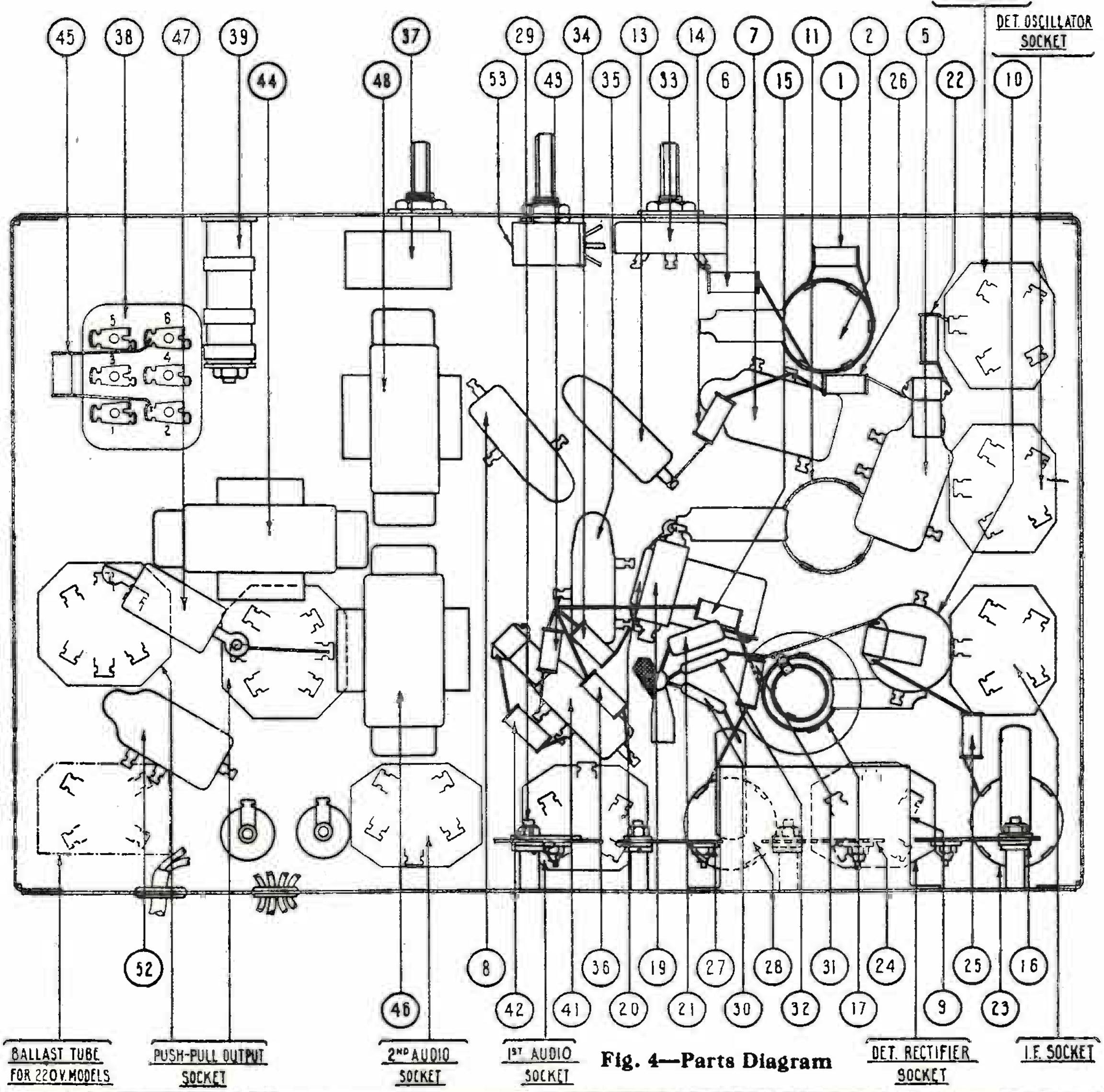

Fig. 4—Parts Diagram

PHILCO RADIO & TELEVISION CORP.

Model 71 Series

The Philco Radio of the 71 series is a seven tube superheterodyne, employing the high efficiency 6.3 volt filament tubes, automatic volume control and pentode output. The chassis is made in two different types, one known as the 121 code, employing a single dynamic speaker, and the other known as the 221 code, employing twin dynamic speakers. These code numbers appear on the radio chassis as a part of the model number. Chassis of one code are not interchangeable with those of another. The intermediate frequency used in adjusting the superheterodyne circuit of the 71 series is 260 kilocycles. The power consumption of the various models is as follows:

Chassis	Volts	Cycles	Watts
71 -121	115	50-60	63
71 -221	115	50-60	80
71A-121	115	25-40	65
71A-221	115	25-40	85
71E-121	230	50-60	63
71E-221	230	50-60	80

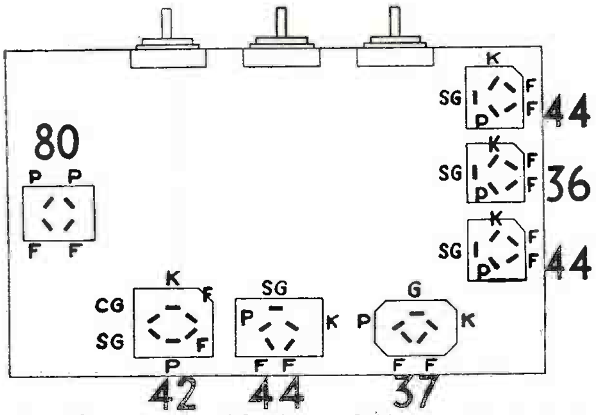

F = Filament
P = Plate
SG = Screen Grid
CG = Control Grid
K = Cathode

Fig. 1—Tube Sockets

Table 1—Tube Socket Data*—A.C. Line Voltage 115 Volts

Tube		Filament Volts—F to F	Plate Volts—P to K	Screen Grid Volts—SG to K	Control Grid Volts—CG to K	Cathode Volts—K to F
Type	Circuit					
44	R. F.	6.3	245	90	4.	20
36	Det. Osc.	6.3	235	90	2.3	20
44	I. F.	6.3	255	90	.2	20
37	Det. Rect.	6.3	0	..	..	15
44	Audio	6.3	50	50	.3	20
42	Output	6.3	250	260	.2	15
80	Rectifier	5.0	365/plate	..	..	..

*All of the above readings were taken from the under side of the chassis, using test prods and leads with a suitable A.C. voltmeter for filament voltages and a high resistance multi-range D.C. voltmeter for all other readings. Volume control at maximum and station selector turned to low frequency end.

Table 2—Power Transformer Data

Terminals	A.C. Volts	Circuit	Color
1–2	105 to 125	Primary	White
3–5	6.3	Filament	Black
6–7	5.0	Filament of 80	Light Blue
8–10	685	Plates of 80	Yellow
4	......	Center Tap of 3–5	Black Yellow Tracer
9	......	Center Tap of 8–10	Yellow Green Tracer

Table 3—Resistor Data

No. on Figs. 4 & 5	Power (Watts)	Resistance (Ohms)	Color		
			Body	Tip	Dot
(52)	..	185 & 245	Round	Tubular	
(24)	.5	1,000	Brown	Black	Red
(57)(58)	.5	5,000	Green	Black	Red
(48)	(Twin	Speaker) 5,620	Round	Tubular	
①(54)	.5	10,000	Brown	Black	Orange
(59)	3.	13,000	Brown	Orange	Orange
⑱	.5	15,000	Brown	Green	Orange
(35)	.5	25,000	Red	Green	Orange
(35)	.5	(Twin Speaker) 51,000	Green	Brown	Orange
(34)	.5	70,000	Violet	Black	Orange
(27)	.5	99,000	White	White	Orange
(37)	.5	490,000	Yellow	White	Yellow
⑰(23)(33)	.5	1,000,000	Brown	Black	Green

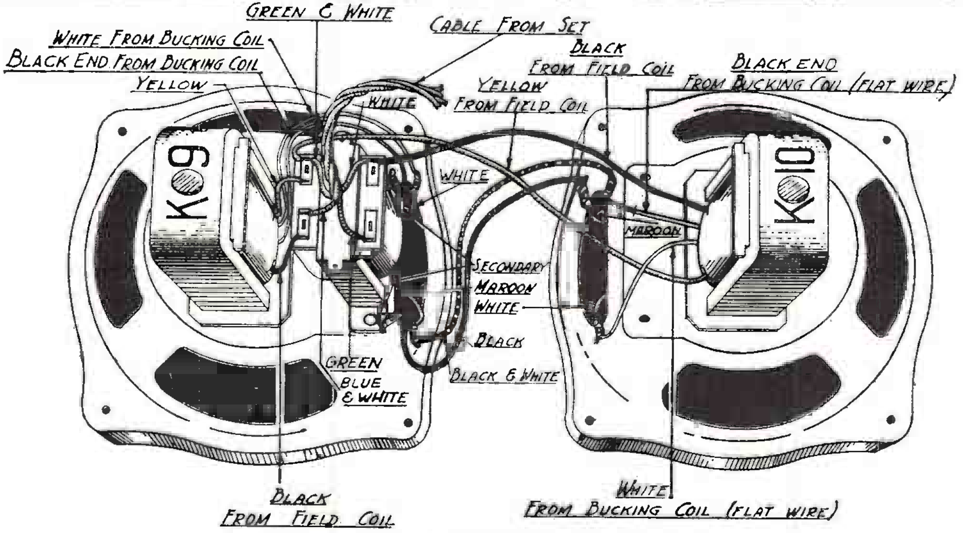

Fig. 2—Twin Speaker Connections—221 Code

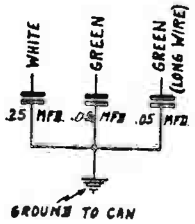

Fig. 3—Internal Connections Filter Condenser

PHILCO RADIO & TELEVISION CORP.

Philco Model 71 Series

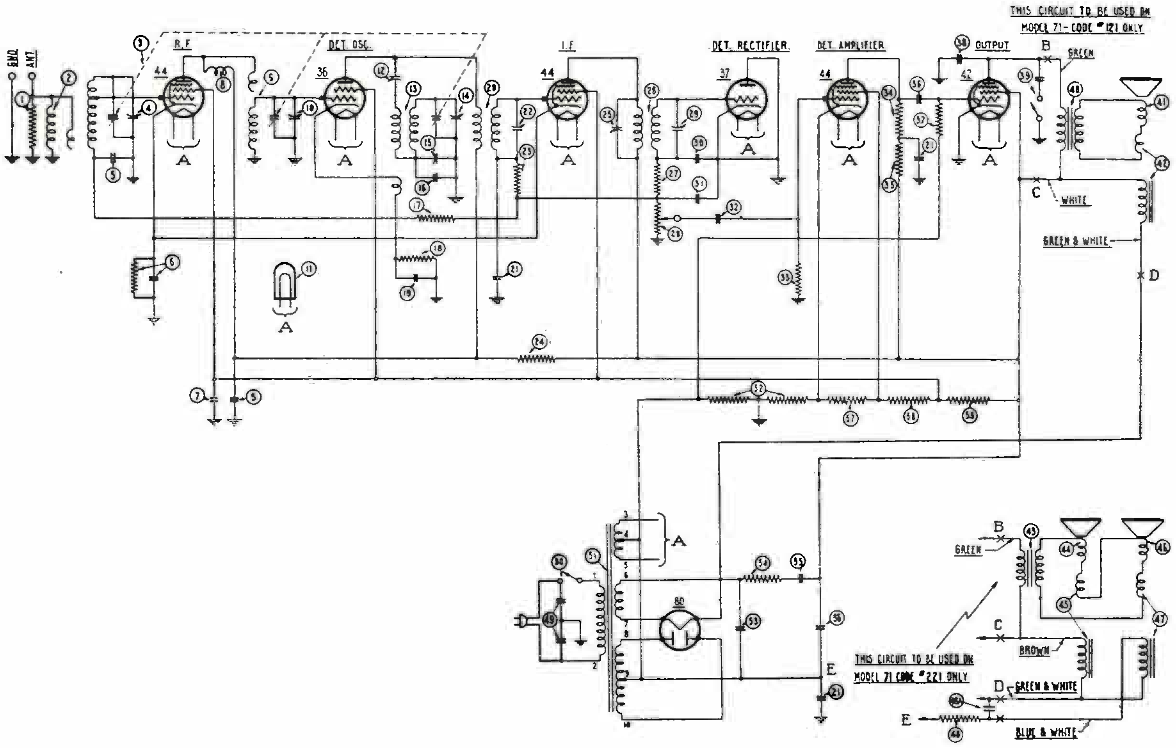

Fig. 4—Schematic Wiring Diagram

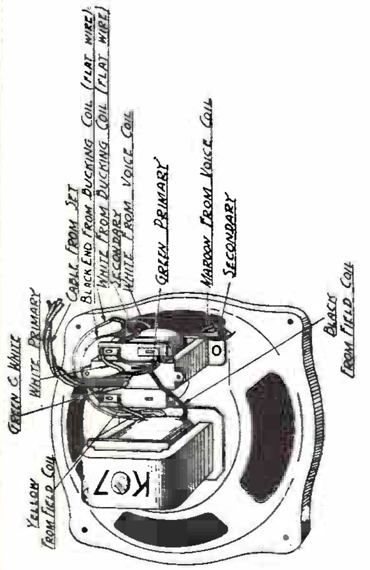

Fig. 6—Speaker Connections—121 Code

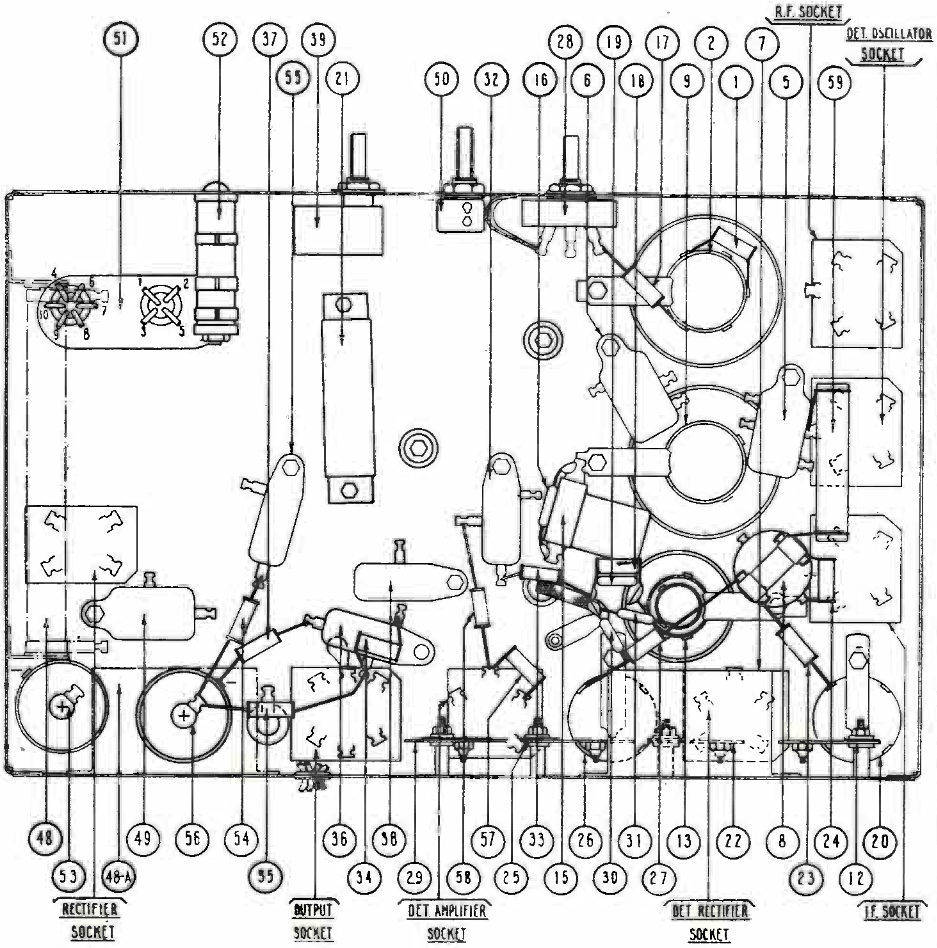

Fig. 5—Parts Diagram

PILOT RADIO & TUBE CORP.

Pilot A. C. Dragon Receiver

For Table and Console Sets Bearing the Following Chassis Model Numbers

Chassis No. 10	110-115 volts	50-60 cycles
Chassis No. 10-F	125 volts	50-60 cycles
Chassis No. 10-A	220 volts	50-60 cycles
Chassis No. 10-B	240 volts	50-60 cycles
Chassis No. 10-J	110-115 volts	25 cycles
Chassis No. 10-JF	125 volts	25 cycles

DESCRIPTION OF CIRCUIT

The Pilot Dragon is a six-tube superheterodyne receiver which, by means of a special coil switching system, can be used to receive standard broadcast stations or any of the short wave stations between 18 and 200 meters.

When the band selector switch is turned to the "BC" position the set operates as a standard broadcast receiver. When the band switch is turned to position "3", short wave stations between 80 and 200 meters are received; in position "2" the set operates from 30 to 80 meters and in position "1" from 18 to 30 meters. For convenience in logging short wave stations, the lower part of the dial scale is calibrated in equal divisions from 0 to 100, while the upper part of the scale is calibrated in kilocycles from 1500 to 550 kc.

The Dragon is not a combination short wave converter and broadcast receiver in a single chassis. In each of the three short wave positions, and in the broadcast position, the set operates as a six-tube super-heterodyne receiver with a single oscillator tube. The complete circuit diagram is given in Fig. 4. An examination of this diagram shows that, in each position of the band switch, the circuit consists of a 224 first detector, a 227 oscillator, a 235 I.F. stage, a 224 second detector, a 247 output stage and a 280 rectifier.

The method of switching bands is clearly illustrated in this diagram. There are four sets of detector and oscillator coils. The band switch selects any desired pair of coils and connects them to the detector and oscillator tubes and to the tuning condensers associated with these tubes. For instance, when the band selector switch is turned to position 1, the switches indicated in the diagram as 1A, 1B, 1C, 1D and 1E are closed. In position 2 of the band selector, switches 2A, 2B, 2C, 2D and 2E are closed. Similarly, the third and fourth sets of switches are closed in positions 3 and 4 respectively. Position 4 is the broadcast band and is marked "BC" on the band selector switch.

Short Wave Bands.

Fig. 1 shows the actual circuit in use when the band selector switch is in any one of the three short wave positions. In this diagram, switch A represents 1A, 2A or 3A; switch B represents 1B, 2B or 3B, etc., depending upon which of the three bands is in use. The circuit is the same in each case and is a standard super-heterodyne arrangement. Gang condenser C4 tunes the oscillator over the desired range and the local oscillation is induced into the first detector by means of the cathode coupling coil. Incoming signals, picked up on the antenna, are induced into the first detector grid circuit which is tuned to resonance by section C3 of the gang condenser. The combination of the incoming signal and the locally generated oscillation produce a beat frequency of 115 kc. which is amplified by the I.F. amplifier. A trimmer condenser, connected across the grid coil of the first detector, is adjusted at the factory to track the detector and oscillator circuits.

Antenna Switching System.

To make sure that broadcast signals pass through the pre-selector before reaching the first detector, it is necessary to eliminate any capacity between the antenna and the first detector grid circuit. To eliminate this capacity, the antenna is brought into a shielded compartment in which the broadcast antenna switch 4A and a special short wave antenna switch are enclosed. The latter connects the antenna to the short wave band switches 1A, 2A and 3A when the band selector is in any of the three short wave positions. In the broadcast position the short wave antenna switch is open and switch 4F is closed. The latter grounds contacts 1A, 2A and 3A, together with the wire connecting these contacts together. All undesired capacity in the wiring of the switch is thus eliminated.

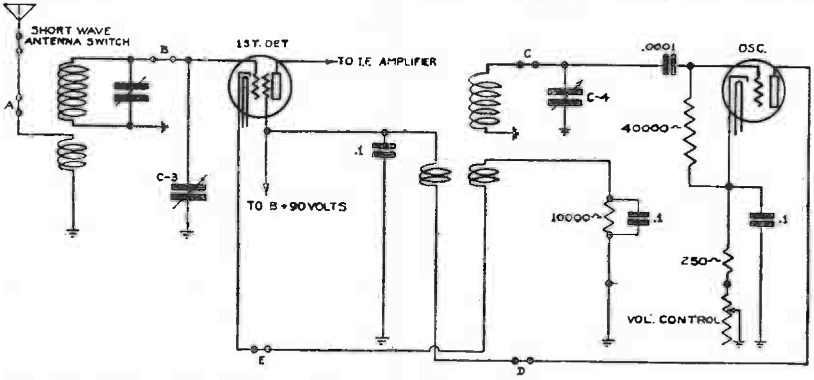

Fig. 1. Schematic of the oscillator and first detector circuit when the band selector switch is in any one of the three short wave positions.

The Broadcast Band.

When the band selector switch is turned to the broadcast position, switches 4A, 4B, 4C, 4D and 4E are closed and complete the same circuits as the corresponding switches in the short wave bands. As before, gang condenser C4 tunes the oscillator grid circuit and gang condenser C3 tunes the grid circuit of the first detector. Unlike the short wave bands, however, the antenna is not coupled directly to the grid circuit of the first detector. As shown in Fig. 4, incoming signals must pass through two pre-selector circuits before reaching the first detector. These two pre-selector circuits are tuned to the incoming signal frequency by the remaining two sections of the four-gang condenser. The purpose of this pre-selector arrangement is the elimination of image interference and cross-talk on the broadcast band.

I. F. Amplifier.

The I.F. amplifier is tuned to 115 k.c. with a total of four tuned circuits. The two trimmers in each I.F. transformer are adjusted through holes in the top of the can.

The second detector operates as a self-biased power detector and is resistance-coupled to the pentode output stage. The 50,000 ohm resistor, between the plate of the 224 and the coupling condenser, prevents R.F. signals from reaching the grid of the pentode, the R.F. component being by-passed by two fixed condensers.

Power Supply and Volume Control.

The skeleton diagram of Fig. 2 shows the arrangement of the voltage supply system. This diagram should prove val-

PILOT RADIO & TUBE CORP.

uable to service men when making voltage or continuity measurements. The plate voltages of all tubes, except the oscillator, are supplied directly from the positive side of the line. The plate of the oscillator, together with the screen grids of the first detector and I.F. tubes, are supplied from the 90 volt tap on the bleeder across the power supply. The screen grid of the second detector is connected to the 45 volt tap.

Volume is controlled by varying the grid bias of the 235 I.F. amplifying tube. On the broadcast band, the volume control also varies the resistance from antenna to ground, this additional control being necessary to reduce strong local stations to complete inaudibility.

Phonograph and Headphone Connections. At the rear of the chassis, a phonograph pick-up jack is provided. When the pick-up is plugged in, it connects between the low side of the I.F. transformer and ground. A high impedance pick-up should be used. The radio volume control should be turned to its minimum position.

A jack is also provided for those who wish to tune in stations with headphones. The phones connect across the output of the second detector. No direct current flows through the phones and there is no danger of shock. High impedance headphones should be used.

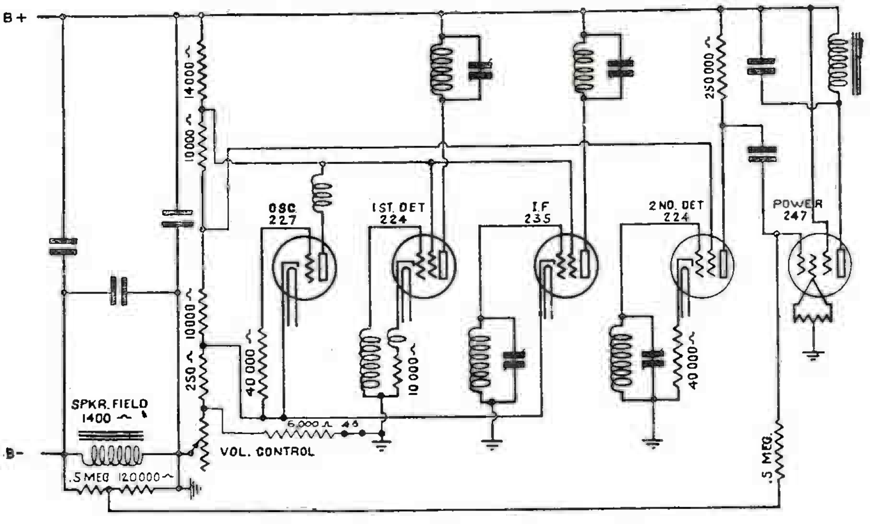

Fig. 2. Skeleton diagram of the voltage supply system.

SERVICE DATA

When the service man is called upon to repair a Pilot Dragon which is inoperative or which does not operate satisfactorily, he should first check the installation as outlined in the instruction sheet which accompanies the set. Make a practice of checking tubes, antenna connections and other simple sources of trouble before looking for faults in the chassis itself. When answering a service call, always take a complete set of tested tubes.

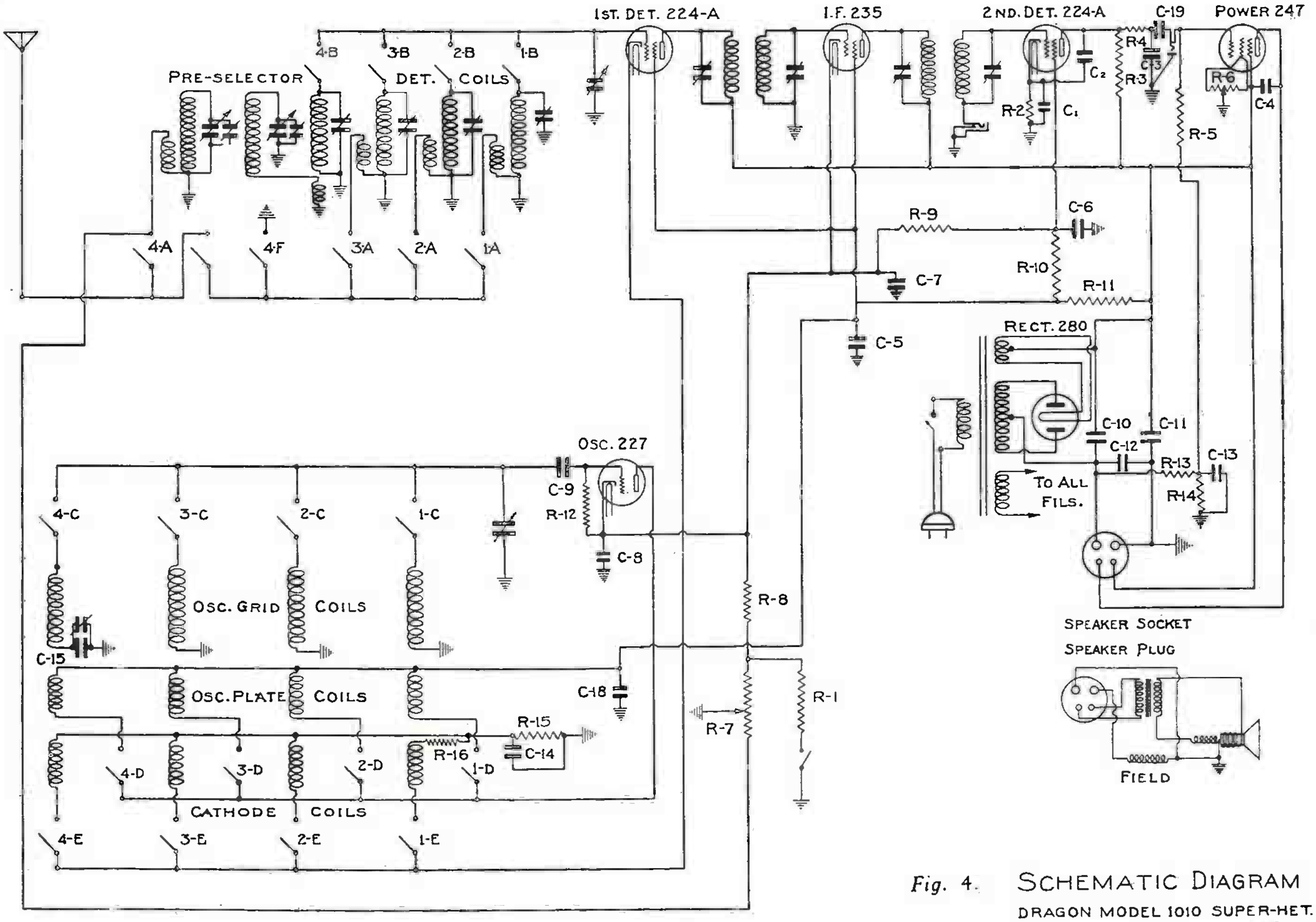

Fig. 4. SCHEMATIC DIAGRAM
DRAGON MODEL 1010 SUPER-HET.

CONDENSERS

C1—.25 mfd.
C2—.0005
C3—.0005
C4—.01
C5—.25
C6—.25
C7—.25
C8—.10
C9 —.0001 mfd.
C10—8.0
C11—8.0
C12—.035
C13—.25
C14—.10
C15—.00148
C18—.1
C19—.01

RESISTORS

R1— 6,000 ohms ½ W.
R2— 40,000 " ½ W.
R3—250,000 " ½ W.
R4— 50,000 " ½ W.
R5—500,000 " ½ W.
R6—Center tap resistor
R7—10,000 ohms
R8 — 250 ohms ½ W.
R9 — 10,000 ohms ½ W.
R10— 10,000 " ½ W.
R11— 14,000 " 3 W.
R12— 40,000 " ½ W.
R13—500,000 " ½ W.
R14—120,000 " ½ W.
R15— 10,000 " ½ W.
R16— 500 " ½ W.

PILOT RADIO & TUBE CORP.

In the following paragraphs we have classified the major troubles which may develop in the Pilot Dragon. Suggestions are given which will enable the service man to locate the cause of the trouble. The suggestions should be followed in the order given. To make the necessary voltage and continuity measurements a standard set-tester and an ohm-meter are required.

A. Set Burns Out Fuses.

If the line fuse burns out when the set is connected to the A.C. line, the primary circuit of the power transformer may either be shorted or grounded to the chassis. The following tests should be made:

1. Test for short circuit by connecting an ohm-meter across the prongs of the line plug. Turn on the line switch of the set. A resistance of 6.7 ohms should be indicated. If no resistance is indicated, there is a short circuit in the line plug or line cord or in the connections to the primary of the power transformer in the chassis. In remote cases, the primary of the power transformer may be shorted internally.

2. If the primary circuit is not shorted, connect one terminal of the ohm-meter to either prong of the line plug and the other terminal to the chassis. Turn on the line switch of the set. An open circuit should be indicated. If the circuit is closed, the primary must be grounded to the chassis. The ground may be in the line cord, the line switch or the connections to the primary of the power transformer in the chassis. In remote cases, the primary of the power transformer may be grounded internally to the laminations.

B. All Tubes Fail To Light.

If all the tubes fail to light, first make sure that the AC line voltage is being supplied to the house receptacle into which the set is plugged. Also make sure that the line switch of the set is turned on. Then proceed as follows:—

Test for an open in the primary circuit of the power transformer by connecting the terminals of the circuit tester across the prongs of the line plug and turning on the line switch of the set. If an open circuit is indicated, trace the defect, which may be in the line plug, line cord, line switch or in the connections to the primary of the power transformer in the chassis.

C. 280 Tube Lights But Other Tubes Fail To Light.

In this case, there must be an open circuit or short circuit in the 2.5 volt filament line in the chassis. Remove the chassis and locate the short circuit or open connection. The short may be in the connections to the dial light.

D. All Tubes Light Except 280.

This may be due to a burned out 280 tube but first plug the set tester into the 280 socket and measure the filament voltage. If the voltage is normal (5 volts A.C.) insert a new 280 tube. If there is no filament voltage or if the voltage is excessive, remove the chassis from the cabinet and locate the fault in the filament wiring of the 280.

E. All Tubes Light But Set Inoperative On All Bands.

Before looking for defects in the chassis, make sure that the inoperation of the set is not due to any of the following causes:—

1. Speaker not plugged in.
2. Grid connector caps not attached to control grids of 224 and 235 tubes.
3. Antenna and ground not attached to set.
4. Antenna and ground connections reversed.
5. Antenna grounded.
6. Loudspeaker defective. Check the loudspeaker for continuity. The field is connected to the two large prongs of the speaker plug and measures 1400 ohms. The primary of the output transformer is connected to the two small prongs and measures 720 ohms.

After the above items have been checked, replace all the tubes in the set with tested tubes. If the set still does not operate, the defect must be in the chassis itself, in which case proceed as follows:

1. Plug the set tester into the 280 socket of the receiver, placing the 280 tube in the U X socket of the tester. Read the plate current for each anode of the 280. The normal current is given in Table I in this manual. A short in the power supply will be indicated by an excessive current drain. A complete open in the power supply will be indicated by no current reading for both plates. If this test shows that there is a short circuit in the power supply, remove the chassis from the cabinet and locate the short in the wiring. If the test indicates that there is an open in the power supply, test the A. C. plate to plate voltage across the 280. If there is no A. C. voltage, the defect is in the high voltage circuit of the power transformer. One of the connections to the 280 socket may be broken. If the A. C. high voltage is normal, the open circuit must be in the wiring of the D. C. power supply in the chassis. In either case, remove the chassis and locate the open circuit.

2. If the 280 current is normal, test the voltages and currents of all the other tubes in the set, beginning with the 247 power tube and working backward. The cause of inoperation can usually be found by this test. See Table I and succeeding section on trouble finding by voltage tests. As explained in this section, be sure to test for open grid circuits.

3. If all the voltages at the sockets are normal, the trouble must be due to some short circuit, open circuit or defective part which does not affect the voltage supply system. A fault of this nature is more difficult to locate. The inoperation of the set is frequently caused by a shorted grid circuit or a short across the coil or resistor in one of the plate circuits. Anything which prevents the oscillator tube from oscillating will also cause the set to be inoperative.

A list of the probable causes of inoperation, when the voltages at all the sockets are normal, is given in the No Signals column of Table II.

The general location of the fault can sometimes be found in the following manner:—Open and close the grid circuits of the second detector, I. F. tube and first detector, in the order given, by means of the grid connector caps. If a loud click is not heard when the grid circuit of one of these tubes is opened and closed, the stage in which the fault is located is known and the short circuit can then be found by making continuity tests or by examining the wiring.

If the set is alive at the grid of the first detector, determine whether the 227 tube is oscillating by touching the tuning condenser of this tube with the finger. The usual double click should be heard. If there is no oscillation on any of the bands, there must be some defect in the wiring of the oscillator circuits which can usually be found by examination. The grid condenser may be disconnected or the oscillator tuning condenser may be shorted. See Table II for a list of such faults.

4. If the 227 tube is oscillating on all bands and you are certain that there is no short circuit in any of the grid or plate circuits, particularly the grid circuit of the first detector, the inoperation of the set must be due to a fault in the antenna circuit. The antenna circuit must either be open or grounded. Examine the antenna switch contacts and test for open circuits and grounds.

F. Set Inoperative On Broadcast Band.

If the set is operating satisfactorily on the short wave bands but is completely dead on the broadcast band, it is evident that the trouble must be in the broadcast circuits. Proceed as follows:

1. With the band selector in the broadcast position, measure the voltages at the oscillator and first detector sockets with a set tester. Make sure that the cathode and grid circuits of the first detector are not open.

2. If the voltages are normal, and no open circuits are indicated by the voltage tests, determine whether the 227 tube is oscillating. With the volume control at maximum and with all tubes in their sockets, connect a high resistance voltmeter from the 90-volt line to ground. The meter reading should be about 90 volts. Then ground the stator of the oscillator tuning condenser. The voltmeter reading should drop to about 65 volts. This change indicates that the oscillator is functioning properly. However, if the original reading is about 65 volts and if there is no change in the voltage when the oscillator tuning condenser is grounded, the tube is not oscillating. In this case, examine the broadcast band switch contacts and the wiring to the oscillator coil. The coil itself may be defective. See Table II for probable causes of inoperation.

3. If the foregoing test shows that the 227 tube is oscillating in the broadcast band, the fault must lie in the grid circuit of the first detector, in one of the pre-selector circuits or in the antenna circuit. Test for a short across the grid circuit of the first detector. The coil resistance from grid to ground is very low but a good circuit tester will measure this resistance and tell whether or not the circuit is shorted. If there is a short circuit, it may be in the trimmer on top of the broadcast detector coil. If the detector grid circuit is not shorted, test for opens or shorts in the two pre-selector circuits and in the antenna circuit.

G. Short Wave Band Inoperative.

If the broadcast band is performing satisfactorily but one or more of the short wave bands is dead, the trouble is evidently in the circuits of the inoperative short wave band or bands. Proceed as follows:

1. Turn the band selector switch to the band which does not operate and measure the detector and oscillator voltages with a set tester. This may reveal the cause of the trouble.

2. If the voltages are normal and the voltage test indicates that the grid circuit of the first detector is not open, test for oscillation on the inoperative band as explained in section F above. If there is no oscillation, examine the band switch contacts, the oscillator coil and the wiring to the coil.

3. If the oscillator is operating, test for a short across the detector grid coil or an

PILOT RADIO & TUBE CORP.

open or short in the antenna circuit of the inoperative band.

4. If all the short wave bands are inoperative, although the oscillator is functioning properly on these bands, the trouble is probably due to an open or ground in the antenna circuit. Examine the short wave antenna switches.

H. Weak Signals On All Bands.

Before looking for defects in the chassis, make sure that weak reception is not caused by any of the following:

1. Antenna and ground not connected or connections reversed or antenna grounded.
2. Poor antenna system. See instructions on installation.
3. Defective tubes. Replace all tubes with tested set.
4. Defective speaker.

J. Weak Signals On Short Wave Bands.

If the set is giving complete satisfaction on the broadcast band but seems to be insensitive on one or more of the short wave bands, the detector trimmers of the insensitive bands may be out of adjustment. The set should be taken to the service workshop and re-aligned. Weak signals can also be caused by a poorly soldered connection or a faulty switch contact, particularly in the detector grid circuit or in the antenna circuit.

K. Weak Signals On Broadcast Band.

If the set is giving complete satisfaction on the short wave bands but is insensitive on the broadcast band, the trimmers of this band may be out of adjustment. However, first check the voltages at the oscillator and detector sockets with the band selector switch in the BC position. Examine switch contacts, soldered connections, etc., for possible causes of insensitivity. If the sensitivity is very poor, test for open connections or short circuits in the pre-selector and antenna circuits.

If the voltages at the detector and oscillator sockets are normal and if there are no open circuits, short circuits or poor connections in the detector, pre-selector and antenna circuits, take the chassis to the service workshop and re-align the broadcast and I F trimmers.

L.—Set Oscillates.

Oscillation can be caused by a defective tube, particularly the 235 I F tube. Replace all the tubes in the oscillating receiver with a set of tested tubes and see that the tube shields are all in place. If the set still oscillates, the condition may be due to a disconnected by-pass condenser, a short across the 50,000 ohm resistor between the plate of the second detector and the grid of the pentode, or a disconnected mica condenser in the plate circuit of the second detector. See Table II for a complete list of the probable causes of oscillation.

M.—Noisy Reception.

If noisy reception is encountered, the service man should first determine whether the noise is in the set or is being picked up on the antenna. If the noise stops when the antenna and ground are disconnected, there is nothing wrong with the set. If the noise persists, the service man can usually judge by the type of noise whether it is due to interference from electrical apparatus transmitted through the power line or is caused by a loose connection or a defective tube in the set.

TABLE I

VOLTAGES AT SOCKETS

As measured with a standard Weston Model 566 Tester—Line Voltage 115 Volts A.C.

Type Tube	Tube Position	A Vts.	B Vts.	C Vts.	Screen Vts.	Screen Current	Cath. Vts.	Plate Current
227	OSC (a)	2.35	75	3.5*	......	......	4.	6.
	(b)	2.35	65	2.2*	......	......	36.	6.
224	1st (a)	2.35	230	10	75	0.13	10	0.9
	DET (b)	2.35	236	11.5	100	0.15	11.5	1.0
235	I.F. (a)	2.35	237	4.	80	1.95	4.	5.5
	(b)	2.35	212	36.	80	0	36	0.2
224	2nd (a)	2.35	200†	5.	40	0.05	5.	0.1
	DET (b)	2.35	200†	7.5	65	0.07	7.5	0.13
247	Power (a)	2.35	210	7.5‡	245	6.5	0	31.
	(b)	2.35	215	7.5‡	250	7.2	0	34.
280	Rect. (a)	4.8	600					31.0 per anode
	(b)	4.8	600					29.0 per anode

(a)—Volume Control at Maximum.

(b)—Volume Control at Minimum.

*—Only when set is tuned to higher than 700 KC on B.C. band. No voltage reading on short wave-bands.

†—On 1000 Volt Scale.

‡—On 250 Volt Scale. Not true bias but reading due to series resistance.

One of the most frequent causes of noise on the short wave bands is the 224 first detector tube. Unless this tube is rigidly constructed, it will create a loud noise when the receiver is operating on the first or second band. At first, the service man may not recognize this as tube noise. It sounds exactly like bad static or a vibrating loose connection. The noise may be continuous or intermittent. If the tube is defective in this respect, the noise can be produced by tapping the tube.

The mechanical design of Pilot 224 tubes has recently been changed to make them free from this defect. An occasional tube, however, may be noisy or the owner of the set may have inserted some other make of 224 tube. If noisy reception is encountered on the first and second bands, insert a new Pilot 224 tube in the first detector socket.

If the noise is present on all bands, it may be caused by a defective tube in one of the other sockets or by a loose connection in the chassis.

N.—Poor Quality.

Before examining the chassis, make sure that poor quality is not caused by defective tubes or a defective loudspeaker. A bad 247 or 224 second detector will cause distortion.

The owner of the set may also complain of poor quality when the trouble is merely due to faulty tuning. If a strong station is not tuned in properly and if the volume control is not turned down to prevent detector overloading, distortion will be heard. In this case, show the owner how to tune the set properly, referring to the directions in the instruction sheet accompanying the set.

If the quality is poor with tested tubes, measure the voltages at all the sockets, particularly the 247 and second detector sockets. Distortion will be heard if the grid bias of either of these tubes is incorrect. As it is difficult to measure the grid bias of the 247 at the socket, the plate current measurement is a better indication of the bias. If the plate current is too high or too low, remove the chassis and examine the grid circuit. Make sure that the grid leak is returned to the junction of resistors R 13 and R 14 and that these two resistors are properly connected in the circuit. Measure the voltage across R 14. Using the 100 volt scale of a 1000 ohm per volt meter, the reading should be 8 or 9 volts. If the voltage is much higher or much lower than this, check the values of R 13 and R 14. The wrong resistance at either of these points will change the bias and cause distortion.

If the volume is inadequate and there is an absence of low tones, by-pass condenser C 1 may be defective or disconnected or the coupling condenser C 19 may not be the correct capacity. The latter should be a .01 MFD condenser. If a mistake has been made and the capacity of this condenser is, say, .001 MFD, the tone quality of the set will be spoiled.

If there is an absence of high audio tones, examine the mica condensers C 2 and C 3. If the capacity at either of these points is too high, the tone quality of the set will be affected, the high frequencies being cut off.

O. Excessive A C Hum.

The Pilot Dragon is provided with a hum adjuster at the rear of the chassis. If the set has too much hum, it can usually be eliminated by this control. If the adjustment has no effect, the hum may be due to any of the following defects:

1. Defective tubes. Replace all the tubes with tested set.
2. Defective speaker. Check field with circuit tester.
3. Short across field contacts of speaker socket. Check with circuit tester.
4. Short from 2.5 volt filament line to chassis. Examine the wiring, including the dial light wiring, and locate the ground.
5. Defective center tapped resistor. One side may be open or shorted.
6. Disconnected by-pass condenser from grid return of 247 tube to ground.
7. Filter condenser disconnected or defective.

P. Microphonic Howl.

Microphonic howl may be due to any of the following causes:

1. Microphonic tubes. Replace all tubes with tested set.
2. Oscillation. Locate and remedy cause of oscillation.
3. Vibration of gang condenser. Check the rubber mountings and see that the gang condenser is properly cushioned. Make sure that the dial or dial shaft is not touching the cabinet or escutcheon.

PILOT RADIO & TUBE CORP.

TABLE II

Probable Causes of Inoperation or Unsatisfactory Reception, when Voltages at Sockets are Normal.

Cause of Trouble	Effect on Operation of Set										
	No Signals				Weak Signals						
	Band 1	Band 2	Band 3	Band BC	Band 1	Band 2	Band 3	Band BC	Poor Qual.	Hum	Oscillation
Loudspeaker											
Input transformer primary shorted	X	X	X	X							
Voice coil open or shorted	X	X	X	X							
Neutralizing coil shorted	—	—	—	—	—	—	—	—	—	X	
Power Supply											
Filter condenser C 10 or C 11 disconnected	—	—	—	—	—	—	—	—	—	X	
One side of filament line grounded	—	—	—	—	—	—	—	—	—	X	
Defective hum adjuster R 6	—	—	—	—	—	—	—	—	—	X	
Condenser C 12 disconnected	—	—	—	—	—	—	—	—	—	X	
By-pass condenser C 13 disconnected	—	—	—	—	—	—	—	—	—	X	
By-pass condenser C 5 disconnected	—	—	—	—	—	—	—	—	—	—	X
By-pass condenser C 6 disconnected	—	—	—	—	—	—	—	—	—	—	X
By-pass condenser C 7 disconnected	—	—	—	—	—	—	—	—	—	—	X
247 Power Output Stage											
Condenser C 4 shorted	X	X	X	X							
Grid leak R 5 shorted	X	X	X	X							
Wrong resistor at R 5 (low)	—	—	—	—	X	X	X	X			
Headphone jack contacts open	X	X	X	X							
Coupling condenser C 19 disconnected	X	X	X	X							
Wrong capacity at C 19 (low)	—	—	—	—	X	X	X	X	X		
Mica condenser C 3 disconnected	—	—	—	—	—	—	—	—	—	—	X
Wrong capacity at C 3 (high)	—	—	—	—	X	X	X	X	X		
Resistor R 4 disconnected	X	X	X	X							
Resistor R 4 shorted	—	—	—	—	—	—	—	—	—	—	X
Wrong resistance at R 4 (high)	—	—	—	—	X	X	X	X			
Wrong resistance at R 4 (low)	—	—	—	—	—	—	—	—	—	—	X
Second Detector Stage											
Wrong resistance at R 3 (low)	—	—	—	—	X	X	X	X			
Mica condenser C 2 disconnected	—	—	—	—	—	—	—	—	—	—	X
Wrong capacity at C 2 (high)	—	—	—	—	X	X	X	X	X		
By-pass condenser C 1 disconnected	—	—	—	—	X	X	X	X	X		
Wrong resistance at R 2 (low)	—	—	—	—	X	X	X	X	X		
Grid circuit shorted (I F transformer)	X	X	X	X							
Poor contact in phono jack	—	—	—	—	X	X	X	X			
I F Stage											
Plate circuit shorted across I F transformer	X	X	X	X							
Grid circuit shorted across I F transformer	X	X	X	X							
First Detector Stage—All Bands											
Plate circuit shorted across I F. transformer	X	X	X	X							
Grid circuit shorted at gang condenser	X	X	X	X							
Wire connecting common grid contacts of switch grounded	X	X	X	X							
Gang condenser disconnected from grid	X	X	X	X							
Cathode by-pass C 14 disconnected	—	—	—	—	X	X	X	X			
Antenna input grounded	X	X	X	X							
Antenna input entirely disconnected from switch	X	X	X	X							
First Detector Stage—Short Wave Bands											
Antenna input disconnected from short wave antenna switch	X	X	X								
Common connection of switches 1A, 2A and 3A shorted to ground	X	X	X								
First band grid coil or trimmer shorted	X										
First band antenna coil open or disconnected	—	—	—	—	X						
First band antenna coil shorted	X										
Second band grid coil or trimmer shorted	—	X									
Second band antenna coil open or disconnected	—	—	—	—	—	X					
Second band antenna coil shorted	—	X									
Third band grid coil or trimmer shorted	—	—	X								
Third band antenna coil open or disconnected	—	—	—	—	—	—	X				
Third band antenna coil shorted	—	—	X								
First Detector Stage—Broadcast Band											
B C band grid coil or trimmer shorted	—	—	—	X							
Second pre-selector coil open or shorted	—	—	—	X							
Pre-selector coupling coil shorted	—	—	—	X							
Second pre-selector gang condenser shorted or disconnected	—	—	—	X							
First pre-selector coil open or shorted	—	—	—	X							
First pre-selector gang condenser shorted or disconnected	—	—	—	X							
B C band antenna coil open or shorted	—	—	—	X							
Antenna input disconnected from switch 4A	—	—	—	X							
Oscillator—All Bands											
Grid leak resistor R 12 disconnected or shorted	X	X	X	X							
Grid condenser C 9 disconnected or shorted	X	X	X	X							
Oscillator gang condenser shorted or disconnected	X	X	X	X							
Wire connecting common grid contacts of switch grounded	X	X	X	X							
Oscillator—Short Wave Bands											
First band grid coil open or shorted	X										
First band plate or cathode coil shorted	X										
Second band grid coil open or shorted	—	X									
Second band plate or cathode coil shorted	—	X									
Third band grid coil open or shorted	—	—	X								
Third band plate or cathode coil shorted	—	—	X								
Oscillator—Broadcast Band											
B C band grid coil open or shorted	—	—	—	X							
Padder condenser C 15 shorted	—	—	—	—	—	—	—	X			
Padder condenser C 15 disconnected	—	—	—	X							
600 K C trimmer shorted	—	—	—	—	—	—	—	X			
B C band plate or cathode coil shorted	—	—	—	X							

PILOT RADIO & TUBE CORP.

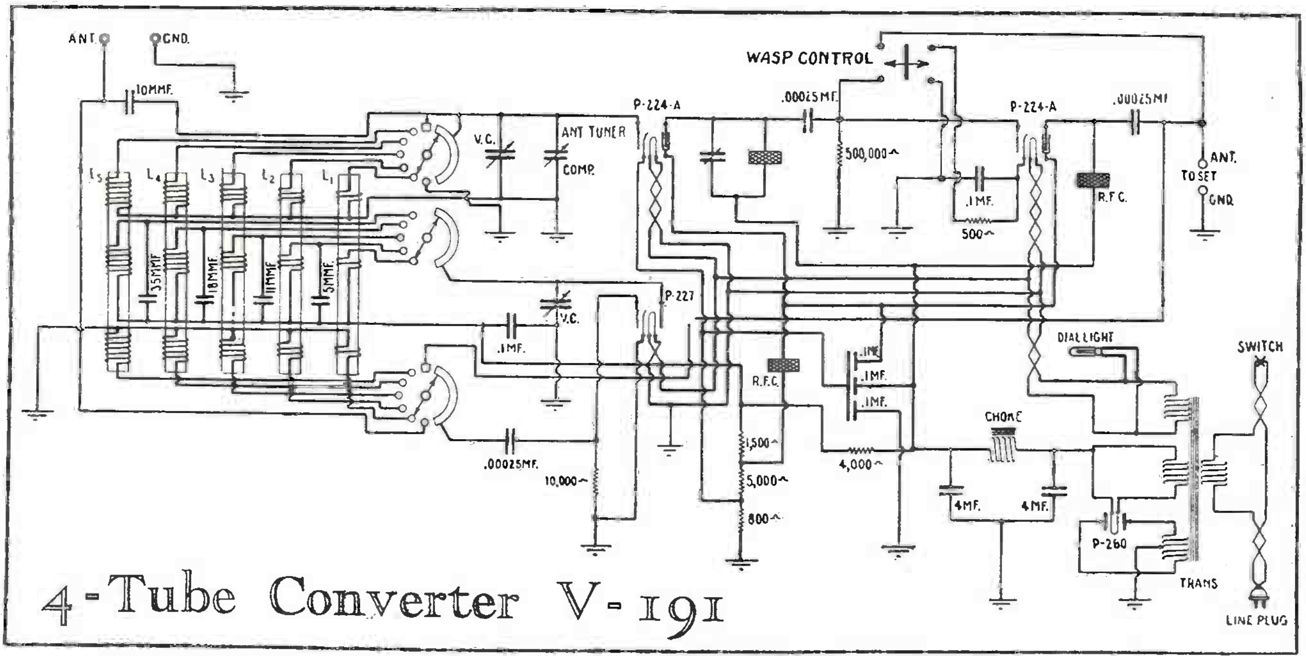

4-Tube Converter V-191

Schematic diagram of the V-191 Converter. This is used with the 7-tube superheterodyne in the T-170 and C 179

VOLTAGE RATINGS AND MODEL NUMBERS

The Plot Short-Wave Converter can be secured for various voltages and frequencies, as listed below. The model number which appears on the label attached to the rear of the chassis, identifies the power supply, with which the unit is to be used.

Model No.	Catalog No.	Line Voltage	Line Frequency
40672	V-191	105-115	50-60 Cycles
40684	V-191-C	215-225	50-60 Cycles
40685	V-191-C	235-245	50-60 Cycles
40674	V-191-F	120-130	50-60 Cycles
40675	V-191-L	145-155	50-60 Cycles
40676	V-191-J	105-115	25-40 Cycles
40673	V-191-C	215-225 or 235-245	25-40 Cycles

Power consumption of all models—40 watts.

TABLE 1

Socket voltage readings on a typical set.

Tubes	Position	"A" Volts	"B" Volts	"C" Volts	Screen Volts	Screen Current	Plate Current
224	I F	2.45	190	1.5	72	.65	2.6
224	Det.	2.45	185	9	63	.01	0.02
227	Osc.	2.45	85	...	..	...	10.7
280	Rect.	5.0	265/plate	...	..	...	14.0 per anode

Code

"A" Volts—a.c. volts across filament.
"B" Volts—d.c. volts plate to cathode.
"C" Volts—d.c. volts cathode to control grid.

Screen volts—d.c. volts screen grid to cathode.
Screen current—d.c. mils. screen grid circuit.
Cathode volts—d.c. volts cathode to filament.
Plate current—d.c. mils, plate circuit.

7-Tube D. C. Super-Heterodyne

Types S-149, S-165, C-152, C-163

VOLTAGE RATINGS AND MODEL NUMBERS

There are two models of the Pilot D. C. 7-tube Super-Heterodyne receiver. Model No. 40176 is designed for operation on 110 to 125 volt D. C. lines and Model No. 40166 is intended for operation on 210 to 230 volt D. C. lines. The two models use substantially the same circuit, the only difference being the modifications required to operate the sets at the rated D. C. voltages.

Each of these D. C. models is available in the same four styles of cabinets as the A. C. 7-tube receivers described in Section I. The ratings of the two models and the catalog numbers of the completed sets in the four styles of cabinets are listed in the table below.

Chassis Model No.	D. C. Line Voltage	Max. Power Consump.
40176	110 to 125 volts	40 watts
40166	210 to 230 volts	80 watts

Catalog Numbers in Cabinets			
Midget	Modernistic	Consolette	Console
S-149-R	S-165-R	C-152-R	C-163-R
S-149-A	S-165-A	C-152-A	C-163-A

DESCRIPTION OF CIRCUIT

The D. C. models of the Pilot 7-tube super-heterodyne use the same fundamental circuit and parts as the A. C. models except that two power tubes, connected in push-pull, are used in the D. C. sets. The extra power tube in the D. C. models takes the place of the rectifier in the A. C. models so that, in each case, the number of tubes is the same.

The D. C. models are just as sensitive and just as selective as the A. C. models. The undistorted power output, however, is considerably lower than that of the A. C. models.

The circuit diagram of the two D. C. models is given in Fig. 8. The circuit, in each case, consists of a 236 r.f. amplifier stage, a 236 self-biased first detector, a 237 oscillator, a 236 dual-tuned band-pass i.f. stage, a 237 self-biased second detector and two 238 self-biased power output tubes connected in push-pull.

It should be observed that, in the two D. C. models, exactly the same chassis is used. The differences between the two models are all contained in the loudspeaker assembly. In the 110-125 volt model, the resistance of the speaker field is 530 ohms and the field is shunted by a 400-ohm resistor. In the 210-230 volt model, the resistance of the speaker field is 1,400 ohms, the field being shunted by a 400-ohm resistor and an additional 215-ohm resistor is connected in series with the line. In all other respects the two sets are identical.

236 SERIES TUBES

The 236, 237 and 238 tubes, used in the D. C. models, were especially designed for operation in D. C. and battery sets. All three types employ indirectly heated cathodes and in this respect are similar to most A. C. tubes. Owing to a special cathode design, the heater voltage may range between 5.5 and 8 volts without appreciably affecting the performance or serviceability of the tubes.

PILOT RADIO & TUBE CORP.

The 236 is a screen grid amplifier, the 237 an all-purpose detector or amplifier, and the 238 is a pentode power tube.

R. F. AMPLIFIER, OSCILLATOR AND I. F. AMPLIFIER

The r.f. amplifier, oscillator, first detector and i.f. amplifier of the d.c. models use the same circuit and the same parts as the 7-tube A. C. model described in Section I. The same r.f. coils, tuning condenser, oscillator system, i.f. transformers, etc., are used in both sets. The method of controlling volume is the same, and a similar Local-Distance switch is employed in the grid circuit of the i.f. amplifier. For a detailed description of this part of the receiver, see Section I.

SECOND DETECTOR AND PUSH-PULL OUTPUT

The second detector is a 237 tube operating as a self-biased power detector. As there is no phonograph connection, the grid bias is provided by a fixed 40,000-ohm resistor between the cathode and B minus. The output of the detector is transformer-coupled to the grids of the two 238 tubes connected in push-pull. The grid bias of these two tubes is provided by the 550-ohm resistor connected between the two cathodes and B minus.

TONE CONTROL

The tone control consists of a fixed condenser, with variable resistor in series, connected between the grids of the 238 tubes. This control attenuates high tones, helps to reduce heterodyne interference and softens the effect of static.

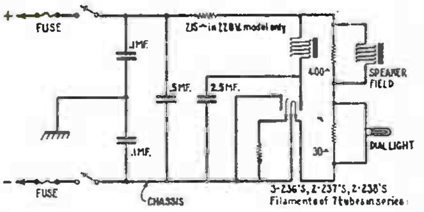

Fig. 7. Skeleton diagram of the voltage supply system of the D.C. models.

POWER SUPPLY SYSTEM

Power is supplied to the set from the D. C. line. The chassis is directly connected to the negative side of the line *but is not grounded* except through the D. C. line itself. As the D. C. line may be grounded on either the positive or negative side it is essential that the ground connection must not touch the chassis. To completely protect against shock or blowing the fuse of the D. C. line the back of the set is covered by a metal screening and the antenna and ground wires brought out through a hole in the rear. This makes it impossible for the user to receive a shock by touching the chassis, or blow out the line fuse by touching the ground connection to the chassis.

If the user wishes to replace burnt-out tubes, he can remove the screen on the back of the cabinet. This automatically disconnects the set from the D. C. line, a male socket being attached to the chassis and a female socket attached to the screen.

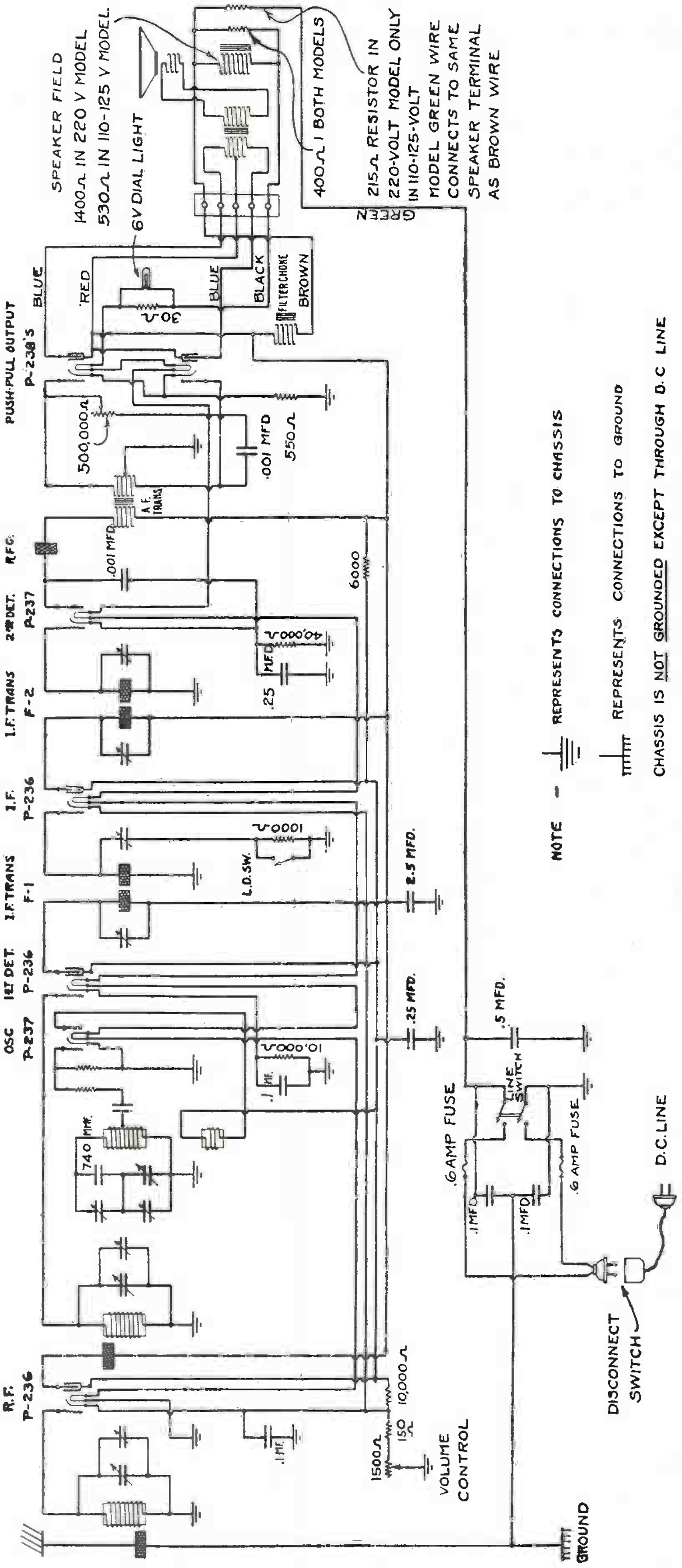

Fig. 8. Schematic wiring diagram of the 7-tube D.C. models. The 110 and 220 volt models use the same chassis but a different loud-speaker assembly as indicated in this diagram.

PILOT RADIO & TUBE CORP.

The skeleton diagram of Fig. 7 shows the arrangement of the voltage supply system. As shown in this diagram, the filament current (.3 ampere) is supplied by connecting the filaments of all seven tubes in series and including the dial light, shunted by a resistor, and the loudspeaker field, also shunted by a resistor, in the same series circuit. In the 220 volt model an additional 215-ohm resistor is connected in series with the line to reduce the voltage. This arrangement of the filament circuit keeps the power consumption low and reduces the heat dissipation. The arrangement is made possible by the use of the 236-7-8 tubes with their indirectly heated cathodes. The filament merely heats the cathode and is not part of the plate circuit.

SERVICE DATA

To avoid unnecessary repetition, the service data outlined in Section I, applicable to both the A. C. and D. C. models, is not covered in detail in this section. The General Service Data Chart in Section I, while particularly applicable to A. C. sets, will be found useful in locating trouble in the D. C. models. Some of the classifications, of course, do not apply to the D. C. sets.

REMOVING CHASSIS FROM CABINET

To remove the chassis from the cabinet, follow the instructions given in Section I. In addition, the metal screen which covers the back of the cabinet must be removed by unscrewing the wood screws which hold this cover in place. When the screen is removed the chassis is automatically disconnected from the D. C. line. To operate the set while it is out of the cabinet the service man should provide himself with a line cord having a female socket to plug into the chassis.

WARNING TO SERVICE MEN

When operating the Pilot D. C. models out of the cabinet, or with the protecting metal screen removed from the back of the cabinet, *do not touch the chassis unless you are completely insulated from ground and do not let any ground connection touch the chassis.* When the set is plugged into the D. C. line the chassis is then connected to the negative side of the line.

FUSES BURN OUT

If the set fuse or line fuse burns out when the set is connected to the D. C. line there must be a short-circuit in the line plug, line cord or across the D. C. line in the chassis. In the chassis the fault may be any of the following:

Short in the wiring from the positive side of the line to the chassis.

Ground connection making contact to the chassis.

Shorted line switch.

Shorted filter condenser (.5 mfd., 2.5 mfd. or either of the two .1 mfd. condensers across the line).

Short from filter choke wire to laminations or chassis.

The short-circuit in the wiring, or defective part, should be located with a continuity or ohm meter. When making tests refer to the wiring diagram of Fig. 8 and the skeleton diagram of Fig. 7.

TUBES FAIL TO LIGHT

If all the tubes fail to light there may be a short-circuit in the set which has blown one or both of the fuses in the chassis. The short should be located, as outlined above.

If a fuse is not blown, the failure of the tubes to light may be caused by any of the following defects:

No D. C. Line Voltage.

Line switch of set not "on."

Open in line cord or plug.

Defective line switch.

Filament of one or more tubes burned out.

Open wiring connection in any part of the series filament circuit.

Open in 215 ohm resistor (220 volt model only).

TABLE I

VOLTAGES AT SOCKETS

PILOT D. C. SEVEN-TUBE SUPER-HETERODYNE MODEL NO. 40176

Line Voltage—115 Volts D.C. Rating—110 to 125 Volts

As measured with a Weston Model 566 Tester

Type Tube	Position	"A" Vts.	"B" Vts.	"C" Vts.	Screen Vts.	Screen Current	Normal M. A.	Grid Test M. A.
236	R.F.	(a) 6.1	103	1.5	52	0.5	2.0	3.5
		(b) 6.1	98	7.0	50	0	0	2.7
237	OSC.	(a) 6.7	52	0	..	...	3.0	3.8
		(b) 6.7	57	0	..	...	3.5	4.2
236	1st Det.	(a) 6.5	100	5.0	48	0.1	0.3	1.6
		(b) 6.5	100	5.2	53	0.1	0.35	1.9
236	I.F.	(a) 6.0	102	1.6	52	0.8	2.2	3.4
		(b) 6.0	97	7.0	50	0	0	2.6
237	2nd Det.	(a) 6.4	90	10	..	...	0.1	0.3
		(b) 6.4	91	10	..	...	0.1	0.3
238	Push-pull	(a) 6.0	91	9.0	94	1.5	6.0	14.0
238	Power	(b) 6.0	92	9.0	95	1.5	6.1	14.5

(a) Volume control at maximum.
(b) Volume control at minimum.

TABLE II

VOLTAGES AT SOCKETS

PILOT D. C. SEVEN-TUBE SUPER-HETERODYNE MODEL NO. 40166

Line Voltage—220 Volts D.C. Rating—210 to 230 Volts

As measured with a Weston Model 566 Tester

Type Tube	Position	"A" Vts.	"B" Vts.	"C" Vts.	Screen Vts.	Screen Current	Normal M. A.	Grid Test M. A.
236	R.F.	(a) 6.5	135	2.0	67	0.5	2.3	4.7
		(b) 6.5	125	12.0	65	0	0	3.7
237	OSC.	(a) 6.5	65	0	..	...	4.5	4.9
		(b) 6.5	72	0	...	...	5.0	5.4
236	1st Det.	(a) 6.7	130	6.0	66	0.1	0.2	2.0
		(b) 6.7	130	6.0	73	0.1	0.23	2.1
236	I.F.	(a) 6.6	135	1.5	67	0.5	2.5	4.5
		(b) 6.6	130	6.0	65	0	0	3.5
237	2nd Det.	(a) 6.9	125	10.0	..	...	0.3	0.4
		(b) 6.9	125	10.0	..	...	0.3	0.4
238	Push-pull	(a) 6.3	125	13.0	127	2.5	8.0	19.0
238	Power	(b) 6.3	127	13.0	130	2.7	8.0	19.0

(a) Volume control at maximum.
(b) Volume control at minimum.

TABLE III

PILOT D. C. 7-TUBE SUPER-HETERODYNE

110 to 125 and 210 to 230-Volt Models

Probable Causes of Inoperation or Unsatisfactory Reception When Voltages at Sockets Are Normal

	Effect on Operation of Set				
Cause of Trouble	No. Sigs.	Weak Sigs.	Hum	Poor Quality	Oscillation
Loudspeaker					
One side of input transformer primary shorted	..	x	..	x	..
Input transformer primary shorted	x	..	..	..	.
Input transformer secondary open or shorted	x	..	..	..	.
Voice coil open or shorted	x	..	..	..	.
Power Supply					
Filter condenser disconnected	..	x	x	..	x
Filter choke shorted	..	..	x	..	
By-pass condenser from screen grid line to chassis open	..	x	..	..	x
Push-pull Output Stage					
Tone control capacitor shorted	..	x	..	..	..
Tone control resister shorted	.	..	..	x	..
Secondary of audio transformer shorted	x	..	..	..	..
One side of audio transformer secondary shorted	..	x	..	x	..
Second Detector Stage					
Audio transformer primary shorted	x	..	..	..	..
R. F. choke shorted	..	..	..	..	x
.001 by-pass condenser disconnected or open	..	..	..	..	x
Cathode by-pass condenser open or disconnected	..	x	..	x	..
I. F. Transformer F-2 secondary coil or trimmer shorted	x		.		..

RCA-VICTOR, Inc.

Radio Service Data Sheet

RCA VICTOR MODEL R-78 BI-ACOUSTIC 12-TUBE SUPERHETERODYNE

(Also, General Electric "Convention" Model J-125 Chassis.)

This is the first commercial receiver to incorporate the new "super-phonic" line of tubes which have recently made their appearance on the market. The tubes of this series incorporated in the R-78 (and J-125) chassis are the 58 R.F. pentode, 56 general-purpose, 46 Class B and 82 mercury-vapor rectifier. (The type 58 tubes are of 6-prong-base design.)

A feature of the receiver is the tone control, which is designed to maintain even reproduction of the low and high frequencies, regardless of the volume setting. Thus, bass reproduction at low volumes is not attenuated as when non-compensating circuits are used.

The resistance and capacity values of the respective units are indicated by figures within parentheses.

The following operating voltage and current readings are for a 120-volt line, the volume control set at "minimum," and no signal being received.

Filament potential, all tubes, 2.5 volts. Plate potential (to cathode or filament), V1, V2, V4, V6, V7, V10, 210 volts; V3, 70 volts; V5, 200 volts; V8, V9, 400 volts; V11, zero. Plate current, V1, V10, 3 ma.; V2, 1.5 ma.; V3, V6, V7, 5 ma.; V4, 2.5 ma.; V5, 1. ma.; V8, V9, 6 ma.; V11, zero. Control-grid potential (to cathode or filament), V1, V2, V3, V4, V8, V9, V10, V11, zero; V5, 12 volts; V6, V7, 8 volts. Screen-grid (to cathode or filament), V1, 100 volts; V2, V4, V10, 95 volts. Cathode (to heater) potential, V1, V3, V10, 7 volts; V2, 10 volts; V4, 8 volts; V5, 12 volts; V6, V7, 11 volts; V11, 15 volts.

The input signal potential for the I.F. amplifier is applied also to the A.V.C. amplifier tube due to the grids of both being coupled together by means of C32. The output of the I.F. amplifier V4 is applied to second-detector V5 through a sharply-tuned transformer I.F.T.2; however, the output of A.V.C. amplifier V10 is coupled to A.V.C. tube V11 through a broadly tuned unit

Although too much selectivity ahead of V11 is undesirable, since it introduces excessive distortion and overload as a station signal is tuned in, still, a certain amount is essential; otherwise, the A.V.C. will be caused to function by a local station when it is desired to tune in a weaker station on an adjacent channel.

The voltage developed across resistors R4, R21, R22, furnish control-grid bias for V1; the drop across R4, R22, is the control-grid bias for V2; and the drop across R4, control-grid bias for V4.

As the drop in these resistors is due to the signal potential applied to the A.V.C. tube and this voltage is in turn dependent upon the bias of the R.F., first detector, and I.F. amplifier, an automatic action is obtained; greater voltage is applied to the R.F. and first-detector than to the I.F. to prevent overloading of these tubes due to a strong, undesired adjacent carrier.

The undistorted power output of the R-78 is rated at 10 to 20 watts, depending upon the percentage of modulation of the incoming signal; consequently, to compensate for variations in sound intensity over the audio frequency band as the output is varied within these limits the volume control circuit is arranged to produce substantially flat response between the range of 35 and 5,000 cycles.

The trap circuit A.F.C.1, C11 tunes to approximately the middle of the A.F. response range and as the volume is reduced to one point, it causes greater attenuation of the middle register than at either end. From this point to the minimum position the volume control acts as a potentiometer across the trap circuit and reduces the volume without changing the frequency response to any greater degree.

This completes the description of the first half of the volume control; the second, which functions only over the last 20 degrees of the angular movement of the volume control, is resistor R1 connected between the R.F. and first-detector cathodes and varies the overall sensitivity

Push-pull voltage amplifier V6-V7 is the driver stage for push-push amplifier V8-V9.

Cabinet resonance has been nullified by means of two side chambers; the baffle area is large.

To prevent excessive hum and noise, it is essential that a good ground be connected to the yellow lead of the chassis; considerable hum also may be caused by insufficient twist in the volume control leads, due to pickup by A.F.C. 1.

In localities remote from strong stations it may be desirable to increase the A.V.C. action to obtain better than 100 mv. sensitivity. This is accomplished by shorting out R1, as indicated by the dotted line, "short."

To realign the chassis, an output meter will be necessary. (This may be a current-squared galvanometer connected to the secondary of T3 in place of the reproducer voice coil; an 0-5 ma. meter in the plate supply lead to V2; or a low-range A.C. voltmeter across the reproducer voice coil.)

A "dummy" 56-type tube having an open heater circuit is required to replace V11; make certain that the dial pointer reads exactly at the short line on the scale when the gang condenser plates are fully meshed. Then, align the circuits at 1,400 kc., with the volume control in the "maximum" position.

Follow this with the alignment procedure at 600 kc., then repeat the procedure at 1,400 kc. Condenser C4A, the 600 kc. trimmer, is reached through a hole in the top of the chassis, and about half-way along a line drawn from the tuning dial to the socket of the first-detector.

To adjust the I.F. circuits, set the service oscillator at 175 kc., replace the regular type 56 tube with the dummy 56, as previously described, couple the oscillator to the control-grid of the first-detector, and set the volume control at "maximum"; adjust first I.F.T.2, then I.F.T.1. Repeat the procedure. Looking at the rear skirt of the chassis, and reading from left to right, the trimmers of the I.F. transformers are arranged in the following order: C8, C7, C6, C5. Terminal panel P1 is below these adjustments. At the left of P1 is the "fidelity" switch, SW.1.

It is a good plan after making the I.F. realignment adjustments to repeat the oscillator and R.F. adjustments.

Following is the color code of the power transformer: 1, black, red tracer; 2, black-red; 3, red; 4, 5, yellow; 6, 8, brown; 7, brown-black; 9, 11, blue; 10, blue-yellow; 12, 14, green; 13, green-yellow.

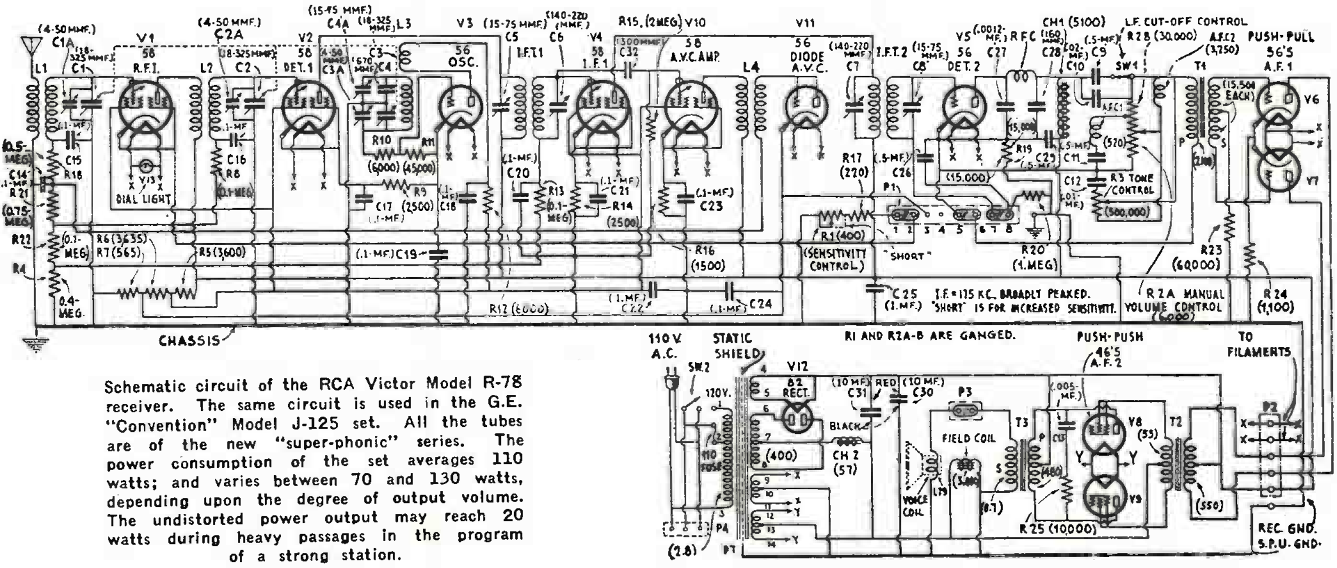

Schematic circuit of the RCA Victor Model R-78 receiver. The same circuit is used in the G.E. "Convention" Model J-125 set. All the tubes are of the new "super-phonic" series. The power consumption of the set averages 110 watts; and varies between 70 and 130 watts, depending upon the degree of output volume. The undistorted power output may reach 20 watts during heavy passages in the program of a strong station.

RCA-VICTOR, Inc.

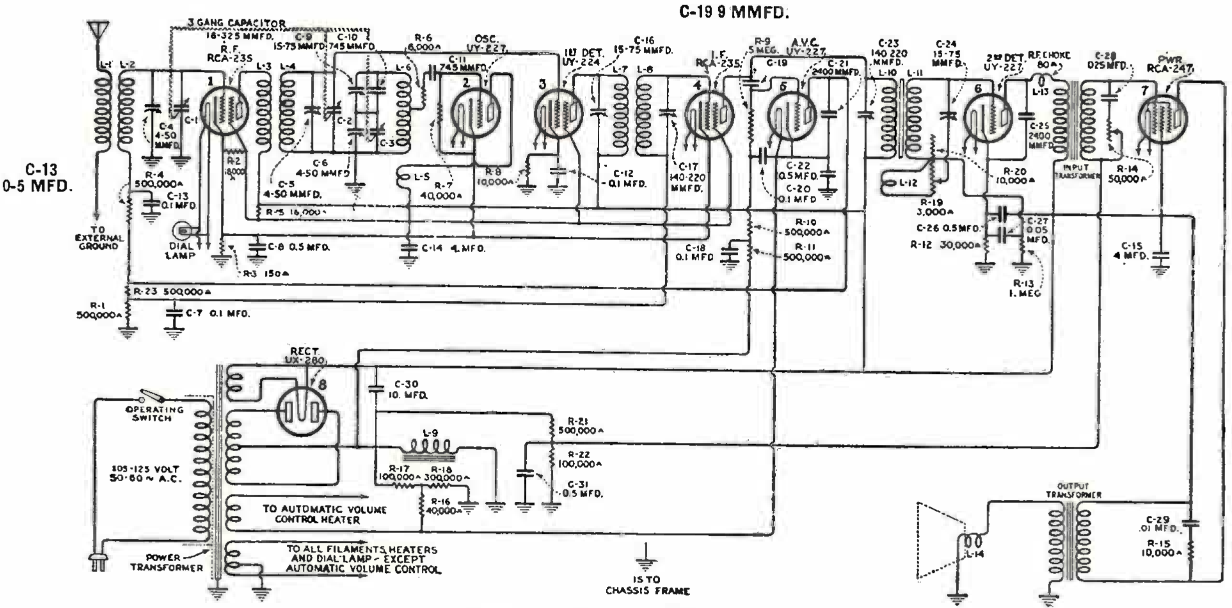

Figure 1—Schematic Wiring Diagram R-10

RADIOTRON SOCKET VOLTAGES

110 VOLT A. C. LINE

(Volume Control Setting Does Not Affect Voltages)

Radiotron No.	Cathode to Heater Volts, D. C.	Cathode or Filament to Control Grid Volts, D. C.	Cathode or Filament to Screen Grid Volts, D. C.	Cathode or Filament to Plate Volts, D. C.	Plate Current M. A.	Screen Current M. A.	Heater or Filament Volts, A. C.
1	2	*0.1	75	210	5.0	0.5	2.2
2	8	0	—	60	5.0	—	2.2
3	7	7.0	70	205	0.5	0.1	2.2
4	2	*0.1	75	210	5.0	0.5	2.2
5	0	0	—	30	0	—	2.2
6	20	*8.0	—	185	0.5	—	2.2
7	—	10	210	210	25	—	2.2

*Not true reading due to resistance in circuit.

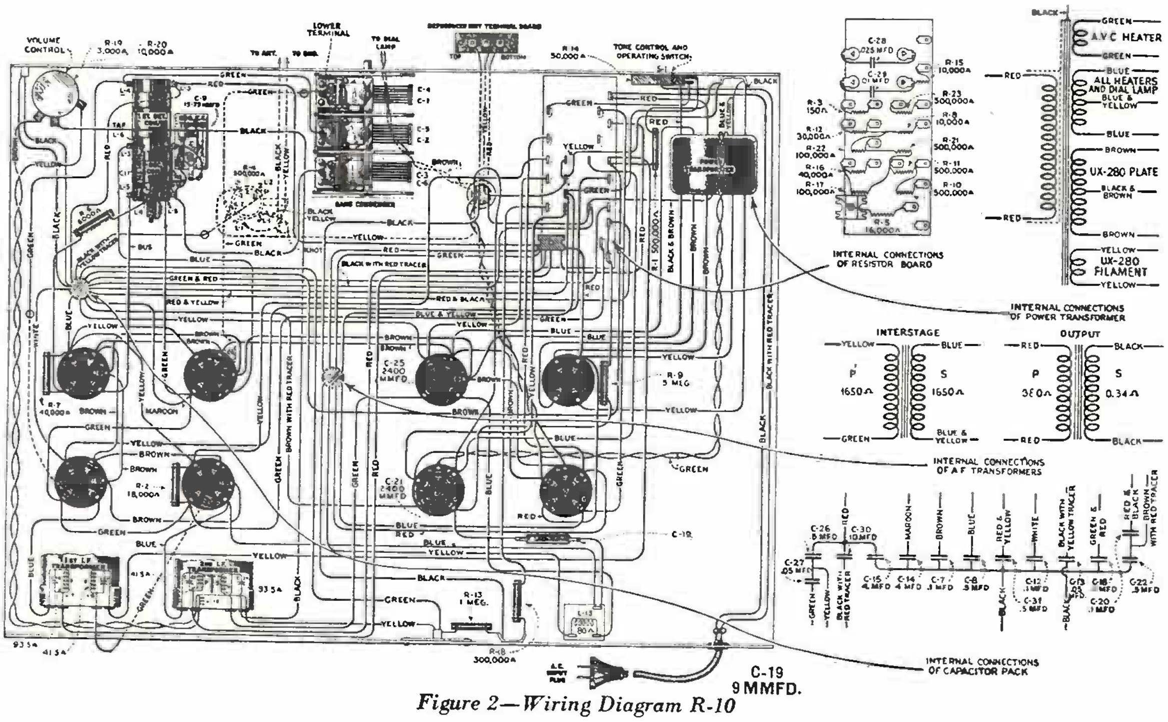

Figure 2—Wiring Diagram R-10

RCA-VICTOR, Inc.

SERVICE NOTES

for

RCA Victor
Universal Radiola RO-23

ELECTRICAL SPECIFICATIONS

Voltage Rating	105–125 Volts and 200–250 Volts
Frequency Rating	50–60 cycles and 25–40 cycles
Power Consumption	120 Watts
Recommended Antenna Length	25–75 feet
Type of Circuit (Broadcast)	A. C. Screen Grid, Super-Heterodyne—8 Tubes
Type of Circuit (Short Wave)	A. C. Screen Grid, Super-Heterodyne—11 Tubes
Number and types of Radiotrons (Broadcast)	2 RCA-235, 3 UY-227, 1 UY-224, 1 UX-280, 1 RCA-247
Number and types of Radiotrons (Short Wave)	Same as Broadcast band plus 2 UY-224 and 1 UY-227
Number of Radio Frequency stages (Broadcast Band)	1
Number of R. F. stages (Short Wave Converter)	2
Number of I. F. stages (Broadcast)	1
Number of I. F. stages (Short Wave)	2
Type of Second Detector	Power Grid Bias
Type of Tone Control	Variable resistance in series with capacitor connected across secondary of interstage transformer
Number of Audio stages	1 (Pentode)
Type of Rectifier	Full Wave, UX-280
Type of Loudspeaker	Dynamic
Wattage dissipation in L. S. Field	10 Watts
Undistorted Output	2.25 Watts

PHYSICAL SPECIFICATIONS

Height	46 Inches
Depth	$12\frac{13}{16}$ Inches
Width	27¼ Inches
Weight Alone	76 lbs.
Weight packed for shipment	127 lbs.

SERVICE DATA

Service information in conjunction with the broadcast receiver is covered in the Service Notes already issued on RCA-Victor Models R-8, R-10 or R-12. The Short Wave Converter is however somewhat different from the usual broadcast receiver and a discussion of its service problems will help the service man in the performance of his work.

ELECTRICAL DESCRIPTION OF CONVERTER CIRCUIT

The RCA Victor Short Wave Converter uses three Radiotrons. one UY-224 as an R. F. Amplifier, one UY-224 as a Detector and one UY-227 as an Oscillator. The purpose of the Converter is to amplify the incoming high frequency signal by means of the R. F. stage, beat it with a local Oscillator signal and produce a modulated beat frequency by means of the Detector, extract the beat frequency so that it may be amplified by means of the broadcast receiver. A special tuning Capacitor for tuning the Oscillator and Detector stages simultaneously, is incorporated in this unit. A series of tapped coils in conjunction with a range switch provides for the shifting to various bands without interchanging coils as with the older style Converters. Also this switch changes the capacity used by the tuning capacitor so that the frequency range of each band is approximately the same. A small trimmer capacitor, known as the Resonator, is used to re-align the detector circuit with the Oscillator whenever the band is changed or the I. F. frequency is shifted. The shaft that controls the Resonator capacitor is also mechanically connected to the operating switch and the antenna switch. It is so made that when the power is turned "off," the antenna is shifted to the broadcast receiver so that broadcast reception may be obtained.

RCA-VICTOR, Inc.

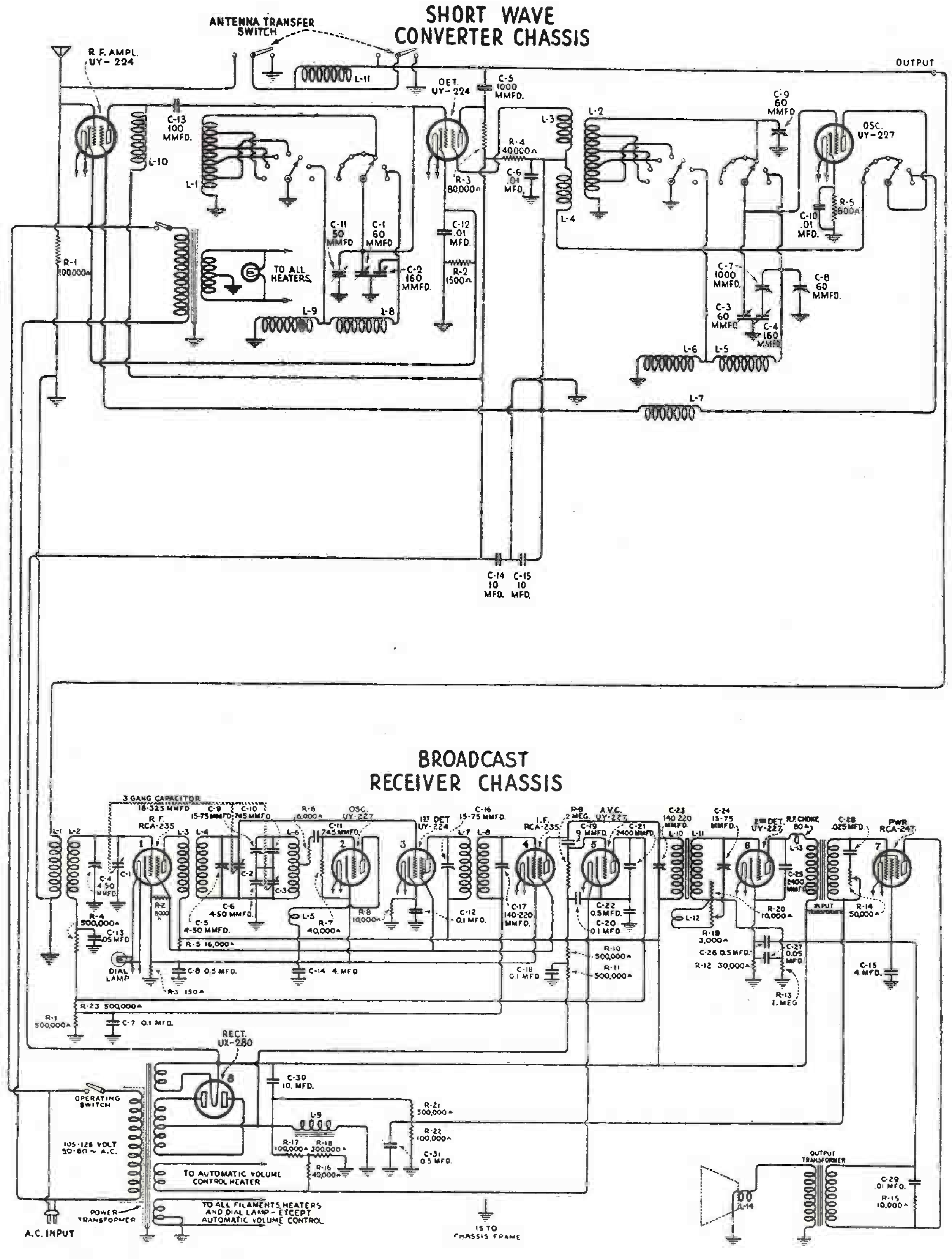

Note—On some models operating switch for broadcast receiver is in circuit to Converter.

Figure 1—Schematic Circuit

RCA-VICTOR, Inc.

(1) ALIGNMENT OF CONVERTER CIRCUITS

If the Converter does not cover the bands indicated on the range switch, refer to Figure 2 and make the following adjustments. A calibrated oscillator or frequency meter is desirable although if the service man is familiar with the stations in the high frequency spectrum, the location of these stations on the scale can be used as a guide for making the adjustments. Also a calibrated short-wave receiver that has an oscillating detector may be used to check the Converter oscillator frequency.

Adjust the broadcast receiver so that it is accurately set at 1075 K. C.—the short wave I. F. frequency. Set the "Range" switch at the 51.3–98.5 meter position.

Set the tuning capacitor at its minimum position. (Plates fully out of mesh.)

Place the external oscillator in operation at 5960 K. C.

Adjust the oscillator shunt capacitor C-8 so that the external oscillator will be heard in the loudspeaker or noted on an output meter.

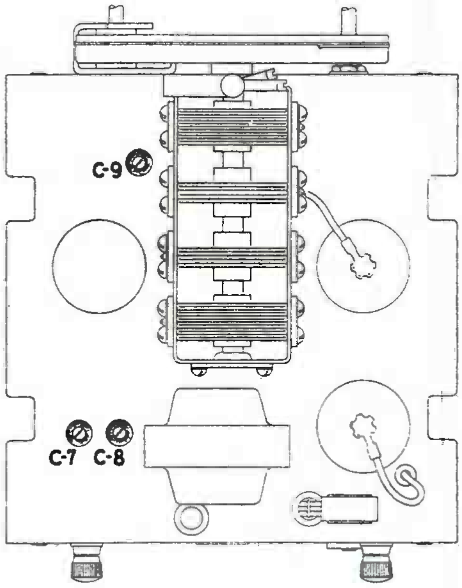

Figure 2—Location of Adjusting Capacitors

If the calibrated oscillator is not available then a calibrated receiver may be used to receive and check the frequency of the converter oscillator. The capacitor C-8 should be adjusted until the oscillator frequency is 7035 K. C.

If a wave meter is the only standard available, then a second receiver should be calibrated from it by means of one of the several methods for doing this accurately.

If no standards are available a satisfactory adjustment can be made by increasing capacitor C-8 slightly more than the point at which the 49 meter broadcasting stations are heard when the tuning capacitor is at its minimum position on the 51.3–98.5 meter band. (With C-8 set at minimum the 49 meter band should be received.)

Now shift the tuning capacitor to its maximum position. The Converter oscillator frequency as picked up on a calibrated receiver, should be adjusted for 4130 K. C. by the oscillator series capacitor C-7. So adjusted, the receiver will receive a 3055 K. C. signal with an intermediate frequency of 1075.

Again, if no standards are available, an adjustment of C-7 that will give a definite point of resonance near the center range of the Resonator control with the tuning dial at 50 will be satisfactory.

After checking each end of the 51.3 to 98.5 meter band, shift the range switch to the 38–51.3 meter position. Set the tuning capacitor at its minimum position (plates fully out of mesh) and the I. F. frequency at 1075. Adjust the oscillator shunt capacitor C-9 until the oscillator frequency is 9100 K. C. or the receiver will respond to a signal of 8025 K. C. If no standards are available, adjust C-9 until the 49 meter stations all fall within and near the center of the 49 meter markings on the dial. Unless this adjustment is properly made the short wave broadcasting will not fall within the bands marked on the dial.

RCA-VICTOR, Inc.

Alignment at each end of the 51.3–98.5 meter band are also for the 98.5–200 meter band. The other alignment is for the five high frequency ranges. When these alignments are properly made, and an intermediate frequency between 1050 and 1100 K. C. is used, the Resonator control will function properly and the various short wave broadcasting services will fall within the bands indicated on the dial.

Special Notes on Effects of Aligning and I. F. Frequency Changes

Unless the line-up adjustments are carefully and properly made, the dial markings will be found to be incorrect. If it is necessary to replace the oscillator coil, the leads on the new coil should be made as short as possible and the alignment of the set checked. Also during operation it is preferable that the I. F. frequency of 1075 be used although any frequency between 1050 and 1100 will be satisfactory.

In unusual cases where local conditions preclude the use of a frequency between 1050 and 1100 K. C., considerably more variation in I. F. frequency without the loss of sensitivity will be permissible. However, the calibration will be shifted considerably, especially at the lower frequencies.

(2) DIAL INDICATOR

The indicator on the dial lamp should be so adjusted that the dial will read 100 when the tuning capacitor is at its maximum capacity position. It is important that this be checked before any alignment adjustments are made.

(3) BROADCASTING STATION HARMONICS

When tuning on the 98.5–200 meter band, the second and third harmonics of broadcasting stations will be heard and as there is no regular short wave broadcasting service on this band such signals may be discounted as better results will be obtained by listening to such programs on their regular wave band.

On the lower length bands, the short wave broadcasting stations will be received in the bands indicated for each position of the range switch with but few exceptions. Broadcasting received at other positions of the dial should therefore be viewed with skepticism unless it is definitely proved to be a short wave station and not a higher harmonic of a broadcast station.

(4) LOCAL STATION INTERFERENCE

When the receiver is located very close to a powerful transmitter, either broadcasting or code it is recommended that an antenna not exceeding 30 feet in length be used. However, if a longer antenna is necessary in order to obtain satisfactory reception, cross modulation from the local station may occur. Such a condition is evidenced by the local station coming in on unmodulated carriers on top of some short wave stations.

Under such conditions, it is advisable to use a tuned input circuit to the short Wave Converter. Such an input circuit can readily be made by winding 3 turns of No. 20 wire on a 1¼ inch tube, spacing the turns ⅛ inch apart. The coil is tuned by means of a .0005 mfd. variable capacitor and should be connected from the antenna input to ground. Such a combination will tune broadly from 13.8 to 51 meters.

(5) ACOUSTIC FEEDBACK

If Acoustic feedback is experienced, it is an indication that the two chassis are not entirely supported on rubber. While with the usual broadcast receiver, such a condition is not so vitally necessary, with high frequency reception, unless each chassis is entirely floating in its rubber mountting and its shafts and knobs not touching the cabinet, howling will result.

(6) BROADCAST RECEIVER HARMONICS

When tuning through the various bands, at various points a slight breathing tone can be heard that is not a C. W. signal, but a harmonic of the broadcast receiver oscillator, being received. If an intermediate frequency of between 1050 and 1100 is used, these will not fall on any of the short wave broadcasting services. However, if they should and thereby cause a whistle, a slight shift —5 kilocycles of the intermediate frequency—will eliminate the interference. Retuning the Short Wave Converter will be necessary to restore the signal to its normal intensity. Identification of these harmonics can be made by this means, a slight shift in the intermediate frequency causing them to disappear while an incoming signal will slowly diminish in volume.

RCA-VICTOR, Inc.

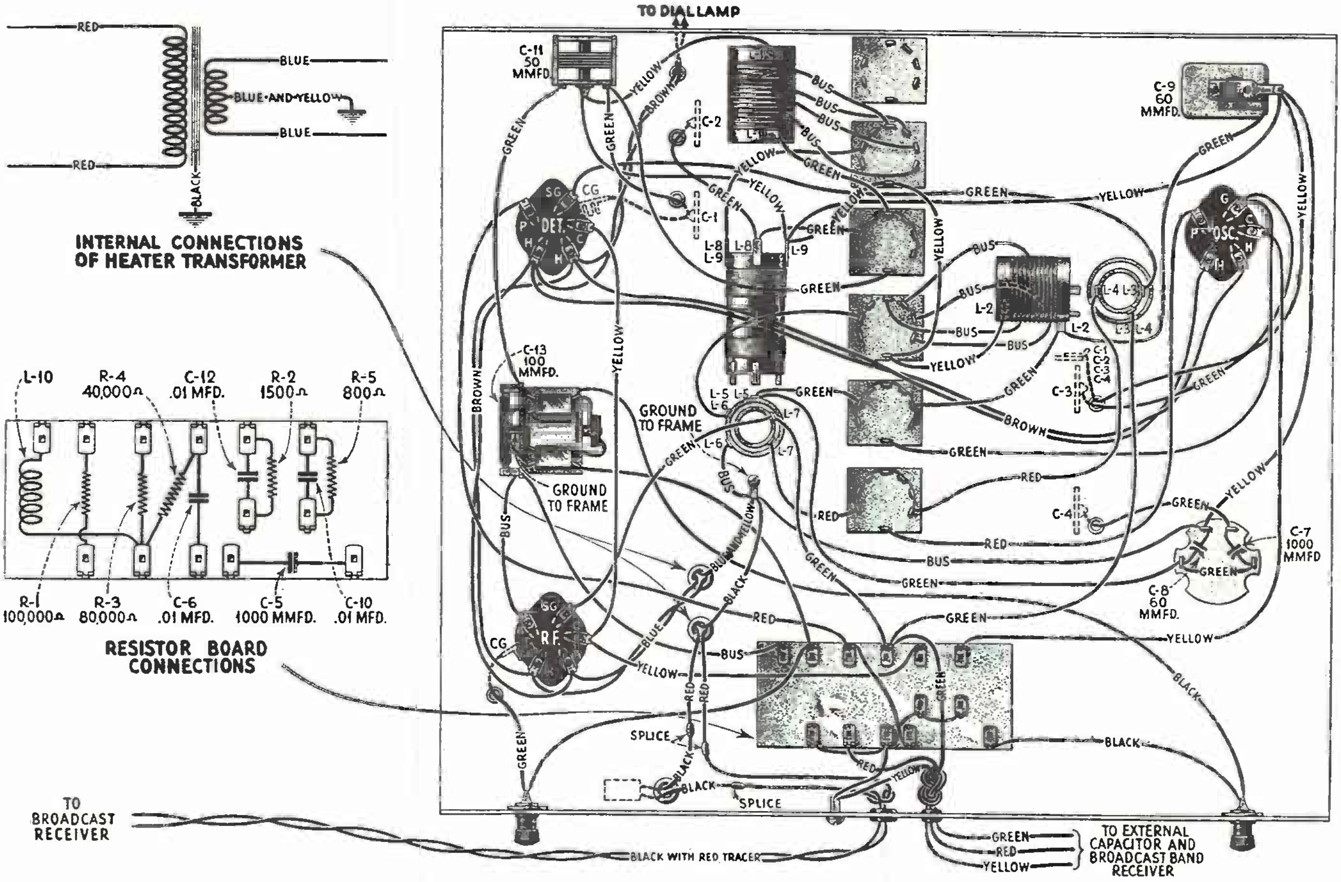

Figure 3—Wiring Diagram of Short Wave Converter

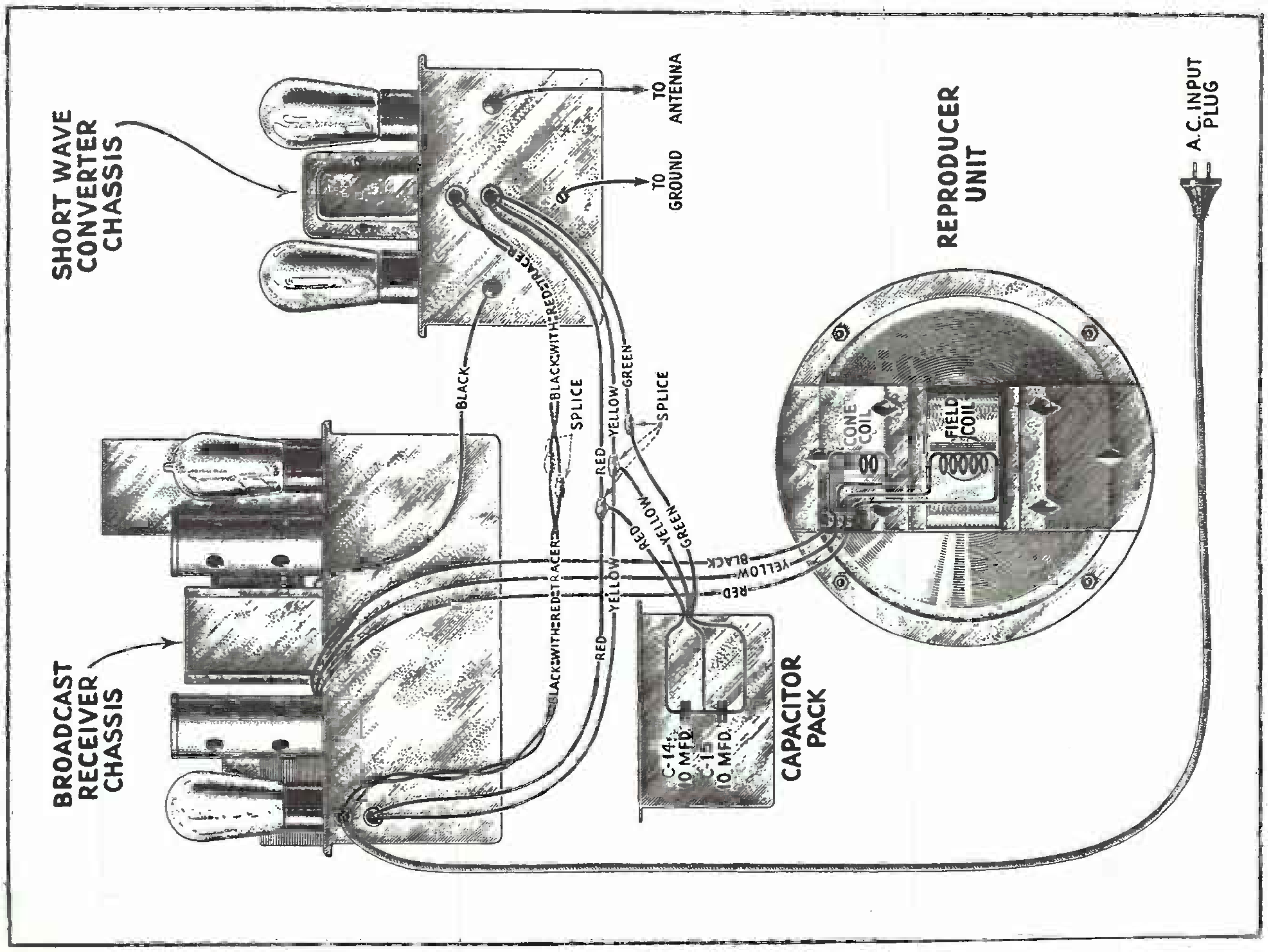

Figure 5—Assembly Wiring

RCA-VICTOR, Inc.

(7) C. W. RECEPTION

Normally C. W. transmitters will not be heard unless they are modulated. However, such reception can be obtained by coupling an external oscillator loosely to the second detector of the broadcast receiver. This oscillator should be at about 174 or 176 K. C. so that a pleasing beat note will be obtained. Also a beat note may be obtained by means of an oscillator, the frequency of which is at the 1st I. F. frequency—1150 to 1100 K. C.—and loosely coupled to the input of the Broadcast receiver chassis.

(8) HUM

In addition to the usual causes of hum in the broadcast receiver, the following points should be checked in relation to hum in the Short Wave Converter.

(a) A. C. input cord near antenna wire. Keep these two leads separate as much as possible.

(b) Slack in A. C. cord has been placed close to Converter chassis. Take up the slack near the outlet, not near the Converter.

(c) Filament transformer center tap not connected.

(d) One side of filament transformer grounded, thereby shorting one section of the secondary.

(9) RANGE SWITCH

A defective "Range" switch may cause any of the following conditions:

(a) Noise. A corroded or loose wire or contact may cause excessive noise even when the switch is not being shifted. Check by removing the antenna to see if the noise decreases.

(b) Resonator control not effective. Check the detector sections—1 and 3 from the front—for faulty contacts.

(c) Oscillator not functioning. Check the oscillator sections—2, 4 and 5 from the front.

(d) Shift of dial readings. Check for corroded or loose connections.

(10) ANTENNA RESONANCE COIL

An open antenna resonance coil will lower the sensitivity of short wave reception. Its purpose is to match the output of the Converter to the input of the broadcast receiver.

(11) ANTENNA TRANSFER SWITCH

The Resonator Control shaft also is used to shift the antenna from the Short Wave Converter to the broadcast receiver. Also the power switch to the converter is operated simultaneously. A failure of these switches will usually be due to the failure of the engaging lever to throw the switch. If such a condition develops, the switch may be raised so that it properly engages with the operating arm on the shaft. See that no oil or grease prevents proper connection to the shaft at the friction bearing or noise will result when the Resonator is adjusted.

(12) FLUTTER

Fluttering may be caused by either of the following:

(a) Open capacitor C-14 or C-15. The purpose of these capacitors is to prevent flutter that may be encountered in a single Pentode receiver.

(b) Antenna lead close to detector Radiotron. See that this lead is in its proper position and removed from the detector Radiotron in the Converter.

(13) VOLTAGE READINGS

The following voltages are obtained at the Converter Radiotron sockets when measured with the usual set analyzers.

RADIOTRON SOCKET VOLTAGES

120 Volt A. C. Line

Radiotron No.	Control Grid to Cathode Volts D. C.	Screen Grid to Cathode Volts D. C.	Plate to Cathode Volts D. C.	Plate M. A.	Heater Volts A. C.
R. F.	—3	50	260	1.0	2.66
Detector	—3	50	180	1.0	2.66
Oscillator	—5	—	50	5.0	2.66

RCA-VICTOR, Inc.

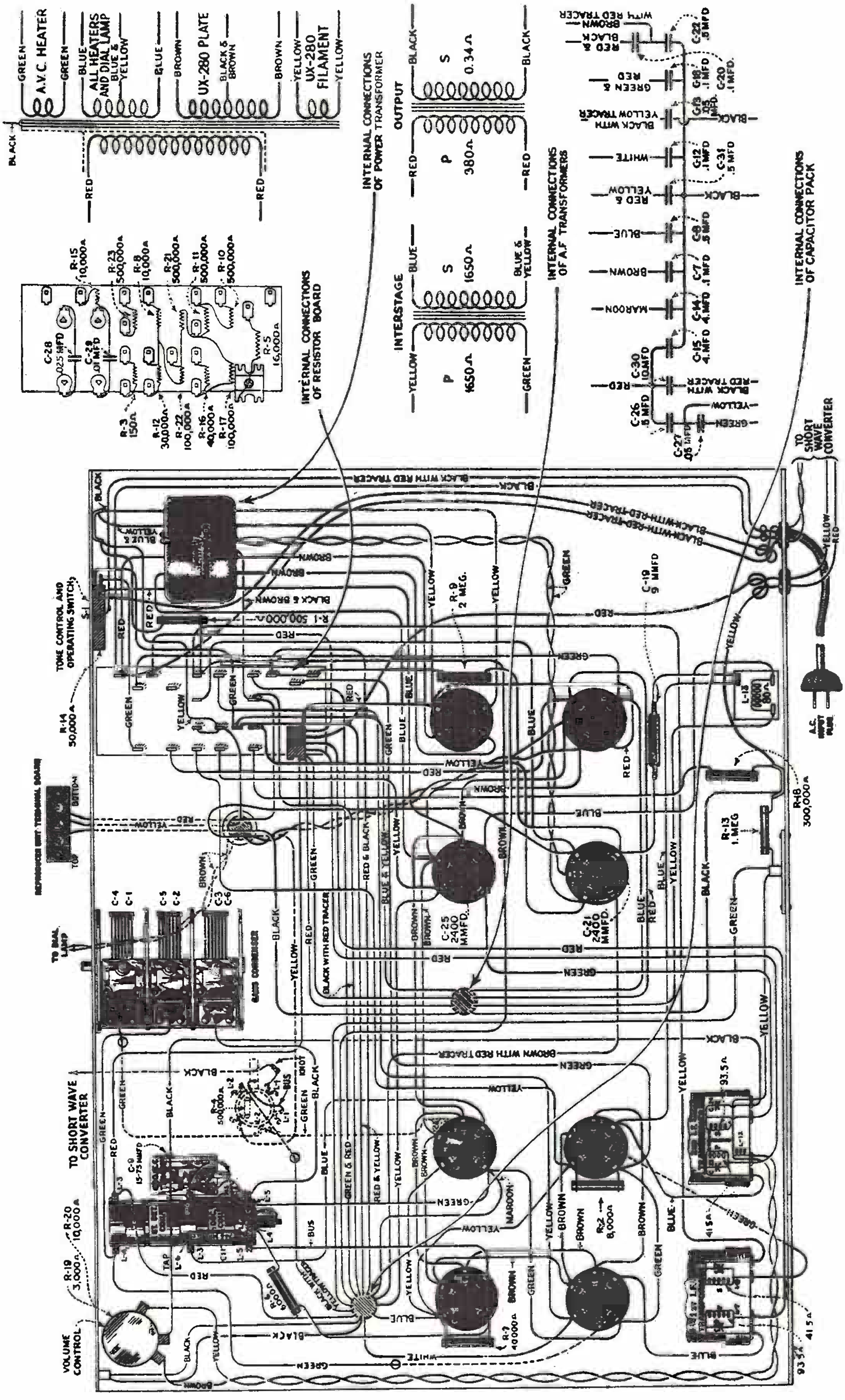

Figure 4—Wiring Diagram of Broadcast Band Receiver

RCA-VICTOR, Inc.

SERVICE NOTES
for
RCA Victor Model CE-29
(Coin Operated Automatic Electrola)

ELECTRICAL SPECIFICATIONS

Voltage Rating	105–125 Volts
Frequency Rating	25, 50 and 60 Cycles
Power Consumption	130 Watts
Type of Circuit	Two Stage Audio Amplifier (Push-Pull Power Stage)
Type and Number of Radiotrons	One RCA-230, Two RCA-247, One UX-280—Total 4
Type of Magnetic Pickup and Tone Arm	Low Impedance Pickup with Inertia Type Tone Arm
Type of Record Changer	RCA Victor Continuous Type, Playing One Side of Ten 10-inch Records and Repeating Indefinitely
Turntable Speed	78 or 33⅓ R. P. M.
Type of Phonograph Motor	Induction, Operating at Synchronous Speed
Turntable Diameter	8 Inches
Type of Rectifier	Full Wave, UX-280
Type of Loudspeaker	Dynamic
Wattage Dissipation in Loudspeaker Field	10 Watts
Undistorted Output	4.0 Watts
Capacity of Coin Box	Approximately 300 Coins—Maximum of 23 May Be Inserted at Once

PHYSICAL SPECIFICATIONS

Height	46½ Inches
Depth	$19\frac{5}{16}$ Inches
Width	28⅜ Inches
Weight Packed for Shipment	200 Pounds

The RCA Victor Coin Operated Automatic Electrola Model CE-29 consists of a standard RCA Victor automatic record changing mechanism that holds ten 10-inch records, a two stage audio amplifier using Radiotrons RCA-247 as a push-pull output amplifier, a coin box with the necessary switches for controlling operation, an eight-inch dynamic type loudspeaker and a continuously variable tone control. Due to the large area of the cabinet, excellent low frequency reproduction is obtained.

The following description covers the technical features of the equipment. Refer to the Schematic Diagram, Figure 1.

The output of the magnetic pickup is connected directly across the volume control potentiometer. The arm and one side of the potentiometer are connected to the primary of the input transformer. It should be noted that a reactor is connected across the unused portion of the volume control. The The purpose of this reactor is to increase the volume of the lower frequencies—from 400 cycles down—at low volume. This compensates for the lesser sensitivity of the ear for low frequencies at low volume.

The secondary of the input transformer is connected to the grid circuit of the first stage audio amplifier, Radiotron RCA-230. The filament of this Radiotron is heated by rectified and filtered current from the UX-280. The reason for using this tube instead of the usual heater type tube is due to the thermal inertia of the latter type. Although the UX-226 would be suitable in this respect, its filament must be heated from A. C. and this would produce excessive hum.

The power stage consists of two Radiotrons RCA-247 connected in push-pull. A 200,000 ohm variable resistor connected in series with a 0.01 mfd. capacitor across the secondary of the input transformer provides a continuously variable tone control. Transformer coupling is used between the two stages as well as between the output stage and loudspeaker.

RCA-VICTOR, Inc.

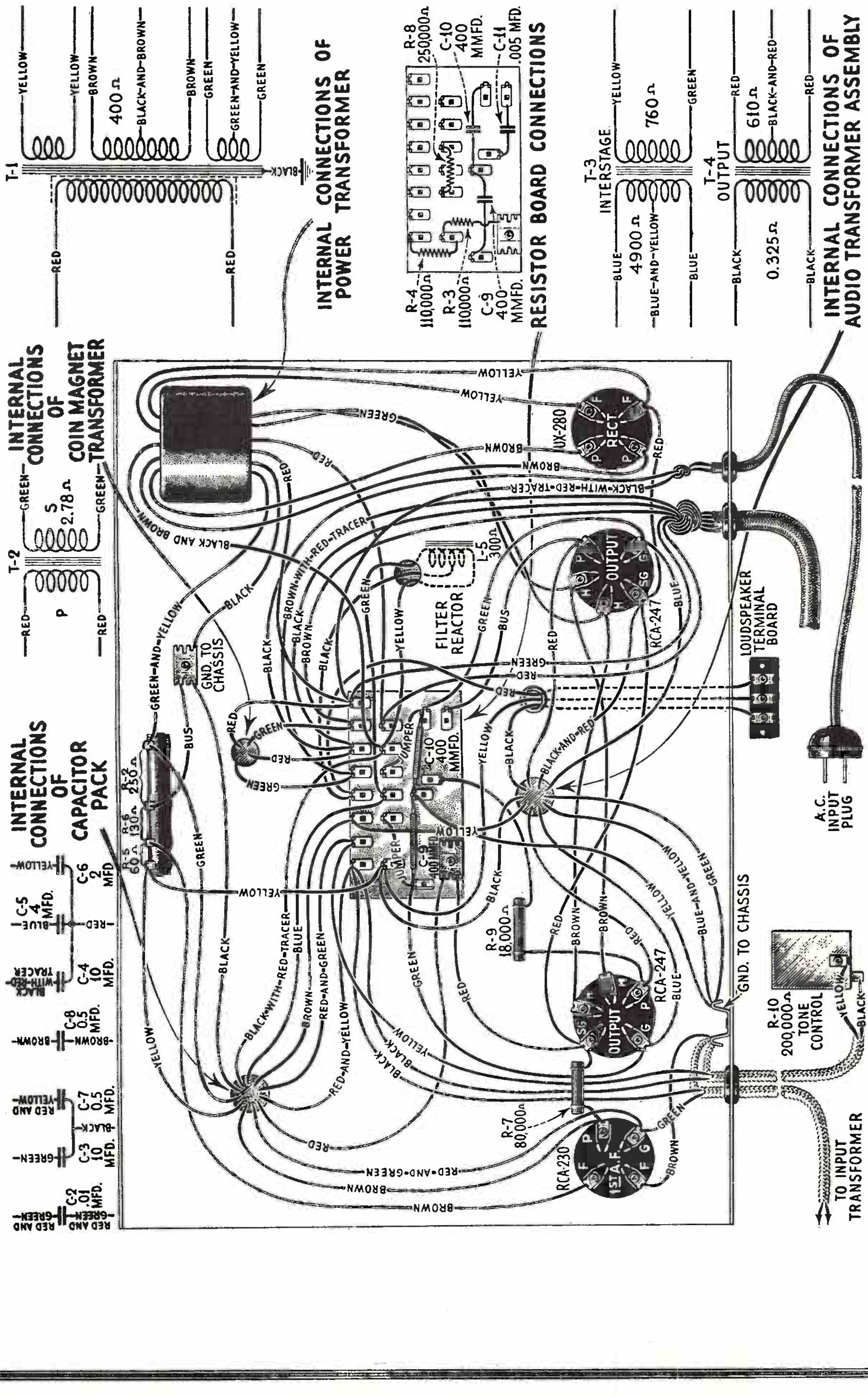

Figure 2—Amplifier Wiring Diagram

RCA-VICTOR, Inc.

The Radiotron UX-280 provides a means of rectifying the high voltage output of the transformer which after suitable filtering is used as plate and grid supply for all Radiotrons and filament supply for the RCA-230.

Figure 3 shows a detail view of the coin mechanism with its adjacent schematic wiring. A detailed explanation of its functioning follows.

A coin inserted in the coin slot makes a momentary contact of the coin switch and thereby energizes the additive magnet. This magnet is energized by a small transformer, having a 16 volt secondary winding, the primary being permanently connected across the line.

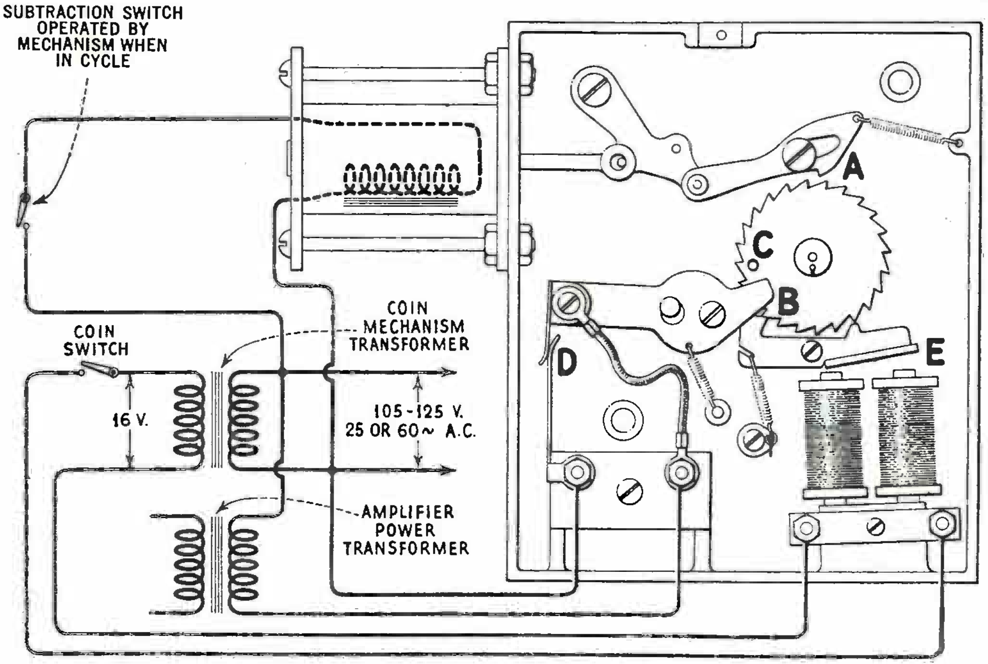

Figure 3—Coin Box Wiring

The energizing of the magnet pulls the lever "E" to the magnet and releases it after momentary contact of the coin switch. This closes the contact "D" by releasing the pressure on the contact arm by the pin "C." Also the lever "E" moves the ratchet due to its contact at "B." The ratchet will therefore move one notch for each nickel placed in the slot up to 23 nickels, it having only 23 teeth. As the contact "D" closes the power to the amplifier and turntable as soon as one nickel is inserted in the slot, the machine begins operation.

Upon completing one record the subtraction switch closes momentarily and energizes the solonoid which pulls lever "A" sufficiently to move the ratchet back one notch. If only one nickel has been inserted, the pin "C" will engage the contact lever and open the switch "D." However if more than one nickel has been inserted, the machine must go through an equal number of cycles before the pin "C" will engage the contact arm and open the circuit.

SERVICE DATA

Service work in conjunction with Model CE-29 will be similar to that of the usual amplifier and will consist of the location and replacement of parts that may prove defective. The amplifier wiring is shown in Figure 2, the assembly wiring in Figure 4 and the voltage readings and Replacement Parts on the following pages.

RADIOTRON SOCKET VOLTAGES

120 VOLT A. C. LINE

Radiotron No.	Control Grid to Filament Volts, D. C.	Screen Grid to Filament Volts, D. C.	Plate to Filament Volts, D. C.	Plate Current M. A.	Screen Current M. A.	Filament Volts
RCA-230	**2.0	—	80	2.0	—	*2.0 D. C.
RCA-247	17	270	250	30	6.0	2.6 A. C.
RCA-247	17	270	250	30	6.0	2.6 A. C.

*The filament voltage of the RCA-230 may vary considerably due to variations in filament resistance. The current however should be very close to 60 M. A. Measuring the current will give a much more accurate indication of correct operation than measuring voltage.

**This actual voltage is 4.5. Different resistance meters will give varying readings, the above value being approximate.

RCA-VICTOR, Inc.

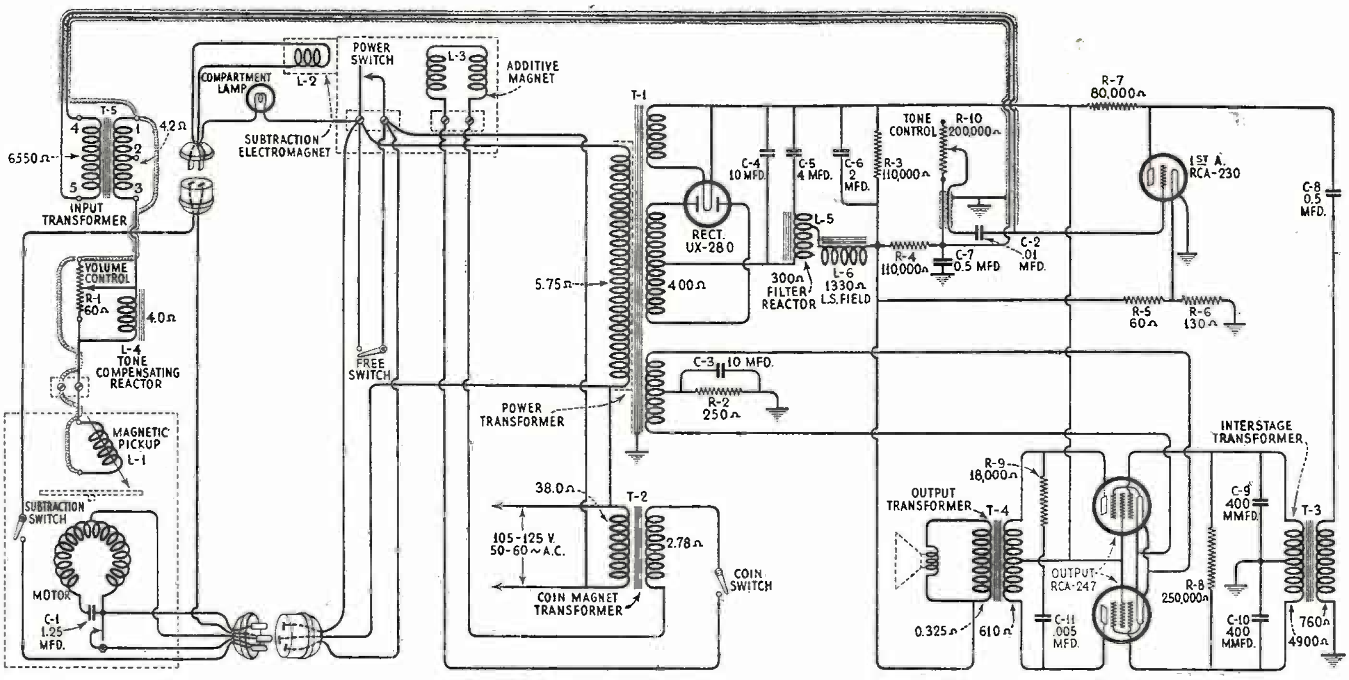

Figure 1—Schematic Circuit

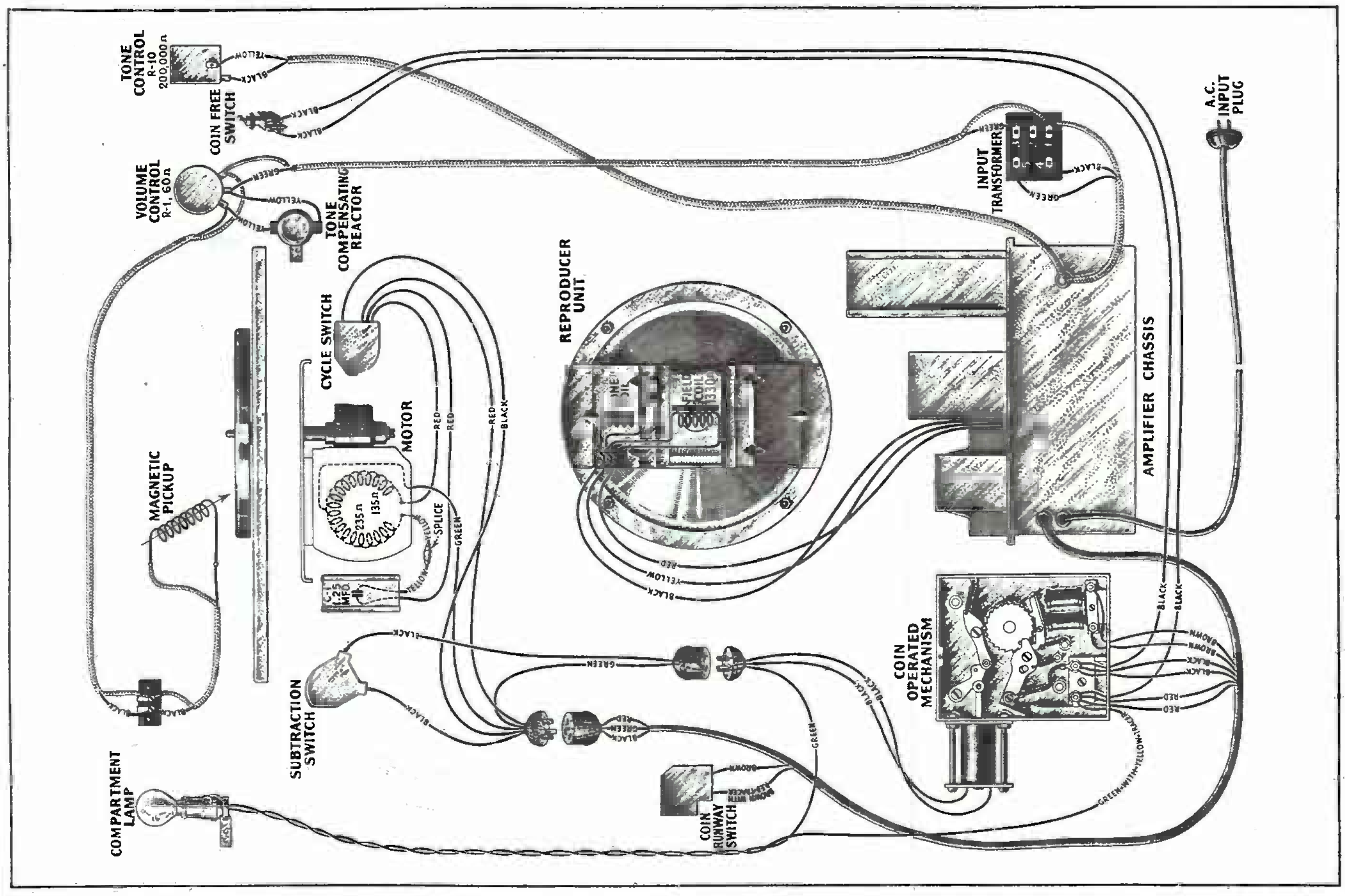

Figure 4—Assembly Wiring Diagram

RCA-VICTOR, Inc.

SERVICE NOTES
for
RCA Victor Portable Radiola P-31

ELECTRICAL SPECIFICATIONS

"A" Batteries required	Two No. 6 Dry Cells
"B" Batteries required	Four 45 volt blocks such as Burgess 5308
"A" Battery Current	0.48 Amps.
Average "B" Battery Current	18 M. A.
Type of Circuit	Super-Heterodyne with A. V. C.
Type and Number of Radiotrons	3 RCA-234, 1 RCA-232, 4 RCA-230
Number of R. F. Stages	One
Type of First Detector	Tuned Input Grid Bias
Number of Intermediate Stages	One
Type of Second Detector	Pentode combining detector, A. V. C. and audio amplification
Number of Audio Stages	Two
Type of Audio Output Amplifier	Class "B"
Undistorted Output	0.75 Watts

PHYSICAL SPECIFICATIONS

Height	14 3/16 inches
Depth	9 5/8 inches
Width	21 1/4 inches
Weight Alone (less batteries)	32 lbs.
Weight Packed for Shipment	43 lbs.
Weight of Batteries	17 lbs.

RCA Victor Portable Radio P-31 is an eight tube battery operated super-heterodyne radio receiver incorporating such features as Super-Control R. F. Amplifier Pentode Radiotrons in the R. F. and I. F. Stages, automatic volume control, combination Pentode second detector, class "B" audio amplifier and the inherent sensitivity, selectivity and tone quality of the RCA Victor Super-heterodyne. The entire mechanism, permanent magnet dynamic loudspeaker and all batteries are enclosed in a portable type container.

ELECTRICAL DESCRIPTION OF CIRCUIT

As the circuit used in the P-31 is somewhat different from the usual circuit, a description of its functioning is of help in properly understanding the operation of the set.

The input from the antenna is coupled to the grid circuit of the first R. F. stage through an R. F. transformer, the secondary of which is tuned to the frequency of the incoming signal. A 130 mmfd. capacitor is placed in series with the antenna to reduce the effects of the variation in antenna capacity from affecting the tuning of the input circuit.

The output of the R. F. Stage is coupled inductively to the grid circuit of the first detector together with the output of the oscillator, the grid circuit of the first detector is tuned by means of the second of the gang condensers to the frequency of the incoming signal. The oscillator is tuned to a frequency of 175 K. C. greater than the incoming signal by the third unit of the gang condenser. The combining of these two frequencies produces a beat frequency—175 K. C.—which appears in the plate circuit of the first detector.

RCA-VICTOR, Inc.

The plate circuit of the first detector, the grid circuit of the I. F. amplifier, the plate circuit of the I. F. amplifier and the grid circuit of the second detector are all tuned to 175 K. C.

The Radiotrons used for the R. F. and I. F. stages are the new Super-Control R. F. Amplifier Pentode Radiotrons, RCA-234. This Radiotron differs from the usual Super-Control Screen grid Radiotron in that it has a suppressor grid, similar to that in an output Pentode. Its characteristics are generally the same as the RCA-232 Screen grid Radiotron except for its exponential characteristics. The RCA-232 is used as a first detector.

The Radiotron RCA-234 used as the second detector is also the automatic volume control. It is a diode detector, being a straight rectifier, a triode audio amplifier and a bias control automatic volume control, the signal current across a resistor giving the necessary voltage drop. Details of its functioning follow. Refer to Figure 3 the schematic circuit.

The signal voltage is applied to the filament and plate of the second detector, being rectified by straight diode action. The audio output is then applied to the control grid and filament by means of capacitor C-19. The tube then operates as an Audio Amplifier, the screen grid acting as the plate. Now examining the input circuit it will be noted that the signal current flows through resistors R-7 and R-8. The drop across resistor R-8 constitutes the control grid bias for the I. F. amplifier and the drop across R-7 and R-8 constitutes the control grid bias for the R. F. stage. A small initial bias—1.5 volts— is present on these tubes being the drop across the 65,000 ohm resistor of the voltage dividing system. Also the control grid bias for the second detector is obtained from the drop across the resistors R-10 and R-11, while R-9 and R-10 in parallel constitute a grid leak for its operation as an audio amplifier, C-19 being the coupling capacitor.

The output of the detector is then coupled by means of impedance coupling to the grid of the first A. F. amplifying tube. The grid leak is in the form of a potentiometer which is the volume control, its action controlling the audio voltage applied to the grid of the first A. F. tube. The output of this tube is then applied to the grids of the two Radiotrons RCA-230 which are connected in Push-Pull as a Class "B" amplifier. The output of this stage is then transformer coupled to the cone coil of the permanent magnet dynamic type loudspeaker. An extra winding, shunted by a capacitor, acts as a high frequency cut-off.

SERVICE DATA

Service Data on the RCA Victor Portable Radiola P-31 is similar to that of other RCA Victor Super-Heterodyne receivers. Alignments of the R. F., Oscillator and I. F. stages should be made in a manner similar to that described in the Service Notes on the Automobile Radiola M-30. The location of the various line-up capacitors is the same as that of the M-30.

In making line-up adjustments on the P-31, there is one important feature that affects this operation, that should be remembered. That feature is the automatic volume control. Due to it being a combined A. V. C. and second detector, it cannot be removed from its socket or replaced with a dummy Radiotron.

R. F., OSCILLATOR AND I. F. ADJUSTMENTS

The R.F., Oscillator and I.F. Adjustments in Model P-31 are similar to those of the Automobile Radiola M-30. However, due to the A.V.C. tube also being the second detector, it cannot be removed while line-up adjustments are made. The proper manner in making this adjustment is as follows:

(a) Set the volume control of the receiver at maximum.

(b) Reduce the output of the external oscillator or its coupling to the receiver until a definite reduction in output meter reading is obtained. The oscillator output should again be reduced until but a slight indication in the output meter is obtained. At this low input the A.V.C. action is not sufficiently flat to interfere with the proper alignment of the various circuits.

RCA-VICTOR, Inc.

RADIOTRON SOCKET VOLTAGES

(No Signal Being Received)

Radiotron No.	Control Grid to Filament Volts	Screen Grid to Filament Volts	Plate to Filament Volts	Screen Current M. A.	Plate Current M. A.	Filament Volts
1. R. F.	0.2	65	150	1.0	3.0	2.0
2. 1st Det.	0.5	65	150	0.1	0.2	2.0
3. Osc.	1.0	—	45	—	3.0	2.0
4. I. F.	0.5	65	150	1.0	3.0	2.0
5. 2nd Det.	2.0	150	—1.5	4.0	0	2.0
6. 1st A. F.	1.0	—	145	—	2.5	2.0
7. Power	14.0	—	150	—	1.5	2.0
8. Power	14.0	—	150	—	1.5	2.0

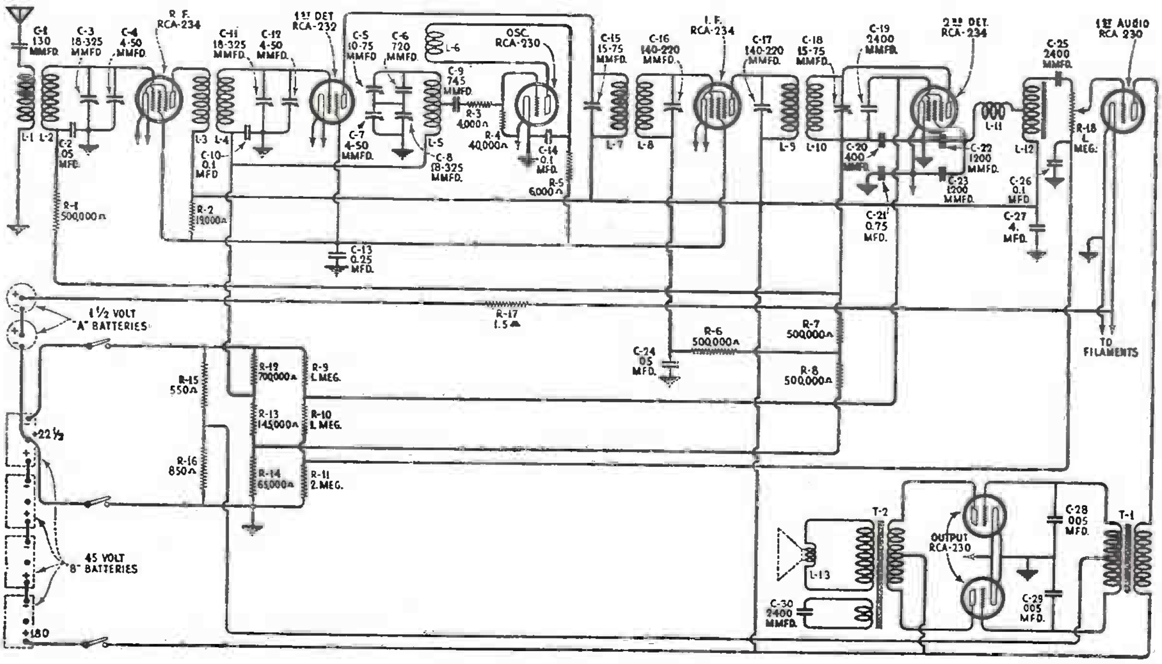

Figure 3.—Schematic Circuit

RCA-VICTOR, Inc.

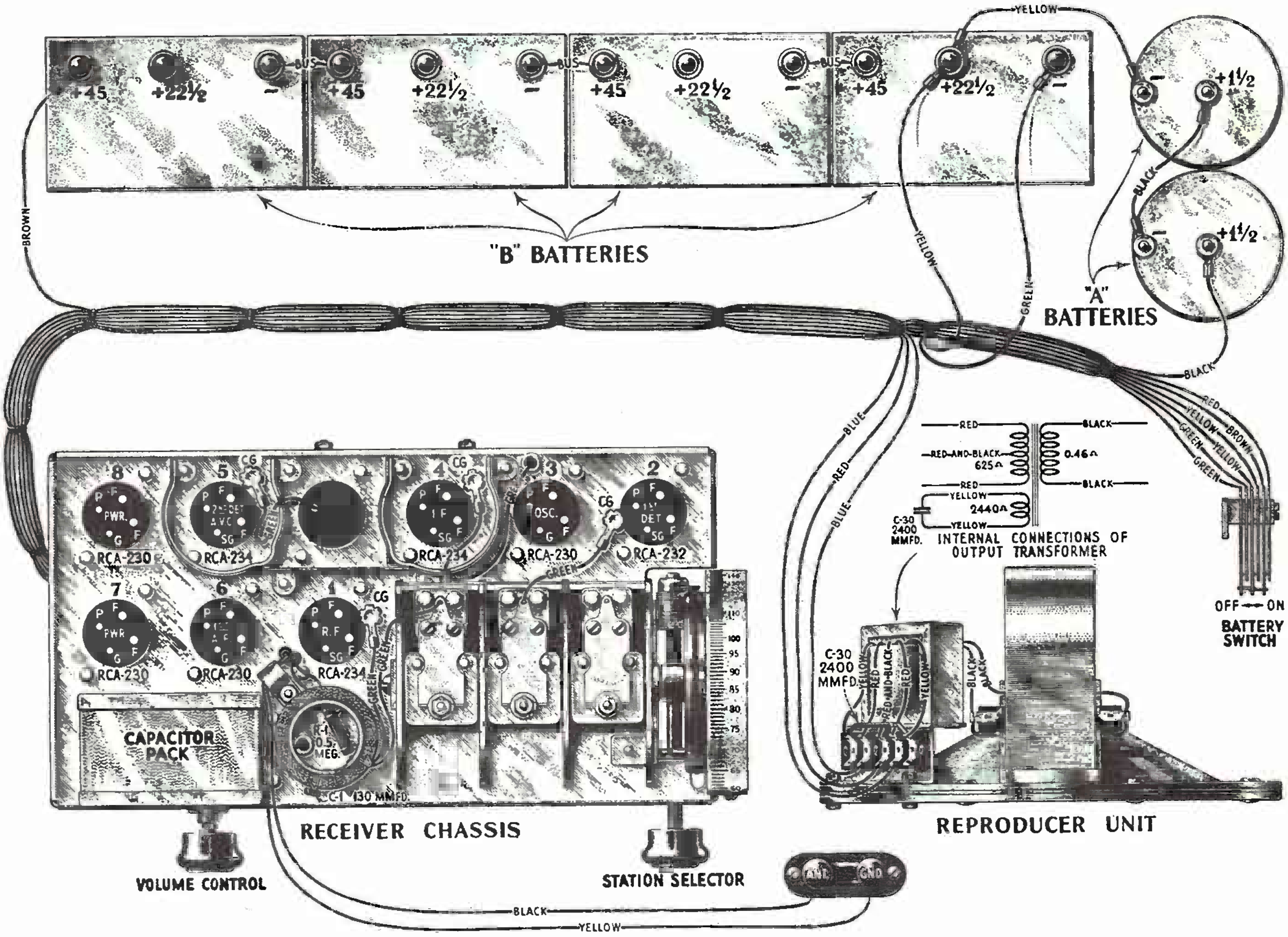

Figure 1.—Assembly Wiring Diagram

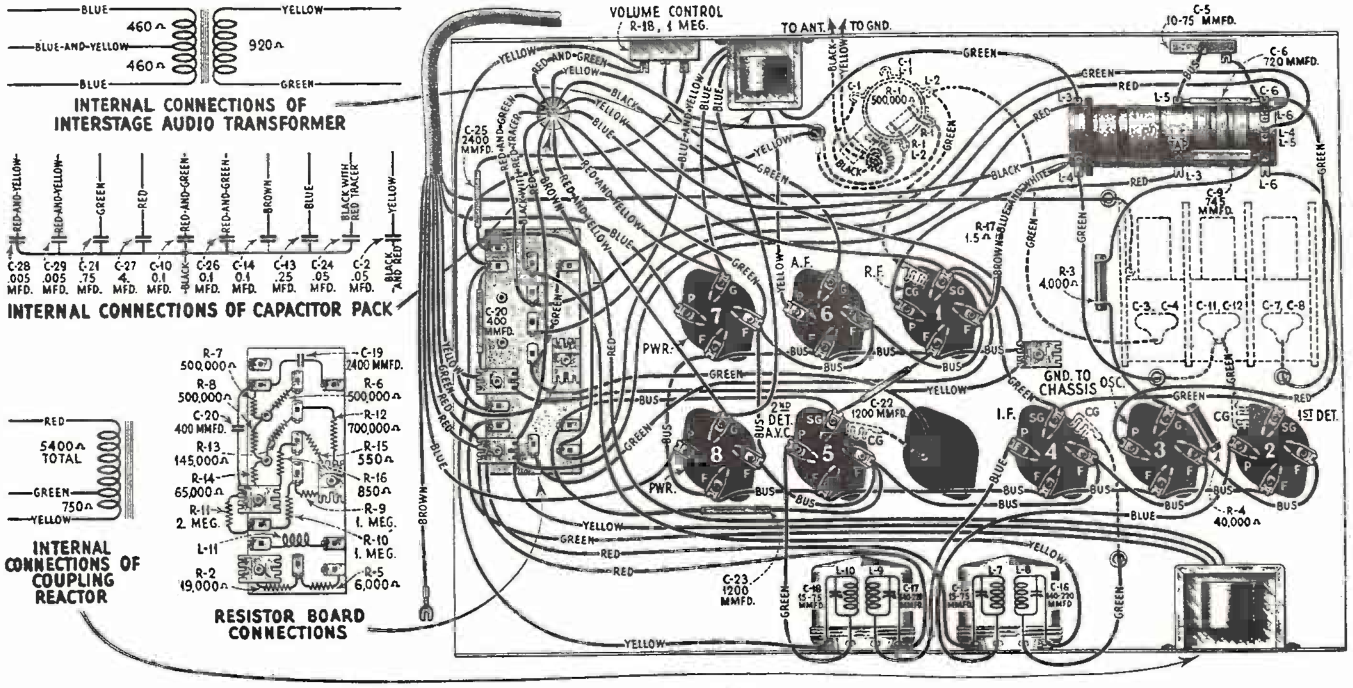

Figure 2.—Wiring Diagram

RCA-VICTOR, Inc.

RADIOLA ~ 48

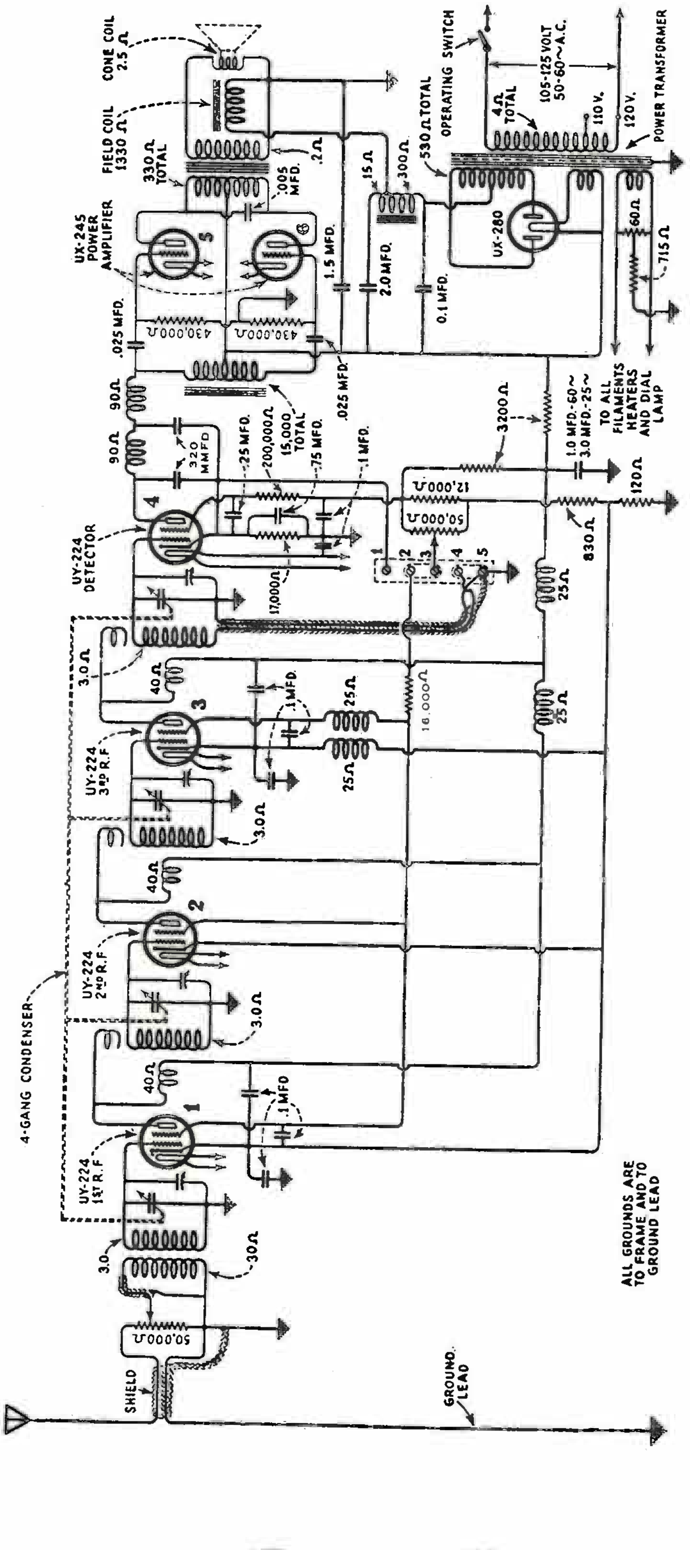

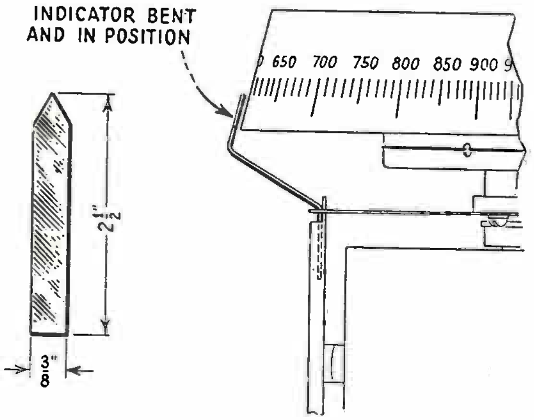

NOTE: IT MAY BE NECESSARY TO PLACE A GROUNDED SHIELD OVER ALL LEADS IN ORDER TO PREVENT OSCILLATION

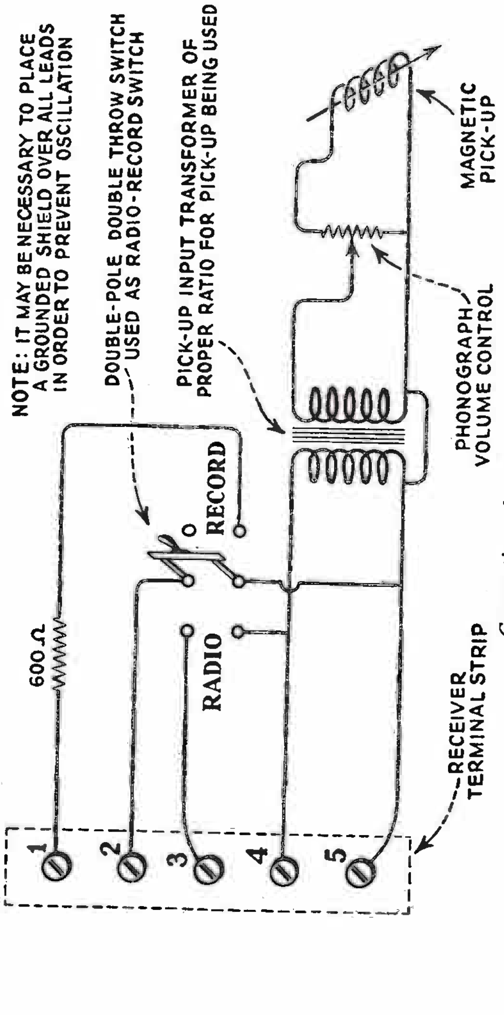

Connections for attaching a magnetic pick-up.

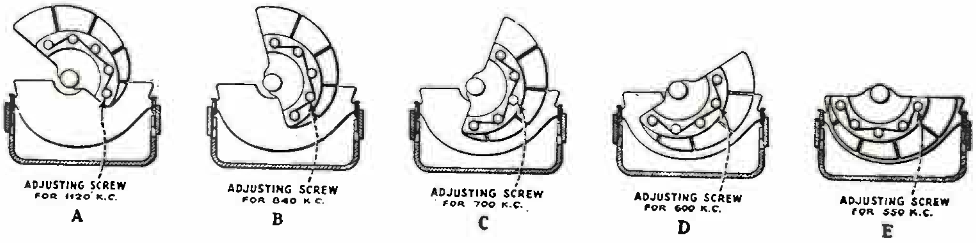

Gang condenser adjustment positions.

RCA-VICTOR, Inc.

RADIOLA ~ 48

VOLTAGE READING SERVICE DATA CHART

Volume Control at Maximum

VOLTAGE CHARACTERISTIC	TUBE 1 1st R. F.				TUBE 2 2nd R. F.				TUBE 3 3rd R. F.				TUBE 4 DETECTOR				TUBE 5 POWER A. F.			TUBE 6 POWER A. F			Cause of Incorrect Reading
	C.G. Volts	S.G. Volts	Plate Volts	Plate M.A.	C.G. Volts	S.G. Volts	Plate Volts	Plate M.A.	C.G. Volts	S.G. Volts	Plate Volts	Plate M.A.	C.G. Volts	S.G. Volts	Plate Volts	Plate M.A.	Grid Volts	Plate Volts	Plate M.A.	Grid Volts	Plate Volts	Plate M.A.	
Normal	2.5	85	160	3.0	2.5	85	155	3.5	2.5	75	155	3.5	7.5	55	225	0.5	1.0	200	25	1.0	200	25	
No C.G. Voltage on Tube No. 1	0	80	150	6.0	...	...	...	...	...	...	...	...	...	...	...	...	...	...	...	...	...	...	Open Secondary of 1st R.F. Transformer
No C.G. Voltage on Tube No. 2	...	...	...	...	0	80	150	6.0	...	...	...	...	...	...	...	...	...	...	...	...	...	...	Open Secondary of 2nd R.F. Transformer
No C.G. Voltage on Tube No. 3	...	...	...	...	...	...	...	...	0	75	150	5.5	...	...	...	...	...	...	...	...	...	...	Open Secondary of 3rd R.F. Transformer
No C.G. Voltage on Tube No. 4	...	...	...	...	...	...	...	...	...	...	...	...	0	15	190	1.5	...	...	...	...	...	...	Open Secondary of 4th R.F. Transformer or Link on Term. Strip
No Plate Voltage on Tube No. 1	2.5	80	0	0	...	...	...	...	...	...	...	...	...	...	...	...	...	...	...	...	...	...	Open Primary of 2nd R.F. Transformer
No Plate Voltage on Tube No. 2	...	...	...	...	2.5	80	0	0	...	...	...	...	...	...	...	...	...	...	...	...	...	...	Open Primary of 3rd R.F. Transformer
No Plate Voltage on Tube No. 3	...	...	...	...	...	...	...	...	2.5	75	0	0	...	...	...	...	...	...	...	...	...	...	Open Primary of 4th R.F. Transformer
No Plate Voltage on Tube No. 4	...	...	...	...	...	...	...	...	...	...	...	...	3.5*	18*	0	0	...	...	...	...	...	...	Open Coupling Reactor or Detector R.F. Choke
No Plate Voltage on Tube No. 5	...	...	...	...	...	...	...	...	...	...	...	...	...	...	...	...	2.0	0	0	5.0	210	45	Open Primary of Output Transformer
No Plate Voltage on Tube No. 6	...	...	...	...	...	...	...	...	...	...	...	...	...	...	...	...	5.0	210	45	2.0	0	0	Open Primary of Output Transformer
No Plate Voltage on Tubes Nos. 1 and 2	2.3	60	0	0	2.0	60	0	0	2.0	60	175	1.5	6.0	12	175	1.5	...	...	...	...	...	...	Open R.F. Plate Supply Choke
No S.G. Voltage on Tube No. 3	2.5	100	155	4.5	2.5	100	155	4.5	2.5	0	165	0	6.5	60	210	1.0	...	...	...	...	...	...	Open S.G. R.F. Choke
No Voltages on Tube No. 3	2.5	80	170	3.0	2.5	100	165	5.0	18*	0	0	0	6.5	60	220	0.5	...	...	...	...	...	...	Open R.F. Choke Connected to Cathode of Tube No. 3
No Plate Voltages on Plates Nos. 1, 2 and 3	2.1	60	0	0	2.1	60	0	0	2.1	60	0	0	10	60	220	0 5	...	...	...	...	...	...	Open R.F. Plate Supply Choke
No C.G. Voltages on Tubes Nos. 1, 2 and 3	0	80	150	4.5	0	65	160	3.5	0	75	150	4.5	30	8.0	195	1.5	...	...	...	...	...	...	Shorted 0.1 Mfd. Condenser from Cathode No. 1 to Ground
No C.G. Voltages on Tubes Nos. 1, 2 and 3	0.4	75	150	3.5	0.4	70	160	3.0	0	80	155	4.5	30	2.0	185	1.5	...	...	...	...	...	...	Shorted 0.1 Mfd. Condenser from Cathode No. 3 to Ground
No S.G. Voltages on Tubes Nos. 1, 2 and 3	2.5	0	180	0	2.5	0	180	0	2.5	0	180	0	...	...	...	...	...	...	...	...	...	...	Shorted 0.1 Mfd. Condenser from S.G. No. 1 or 3 to Cathode
No Plate Voltages on Tubes Nos. 1, 2 and 3	7.0	1.0	0	0	7.5	1.0	0	0	8.0	0	0	0	0	1 0	175	0	...	...	...	...	...	...	Shorted 0.1 Mfd. Condenser from Plate No. 3 to Cathode
No Plate Voltages on Tubes Nos. 1, 2 and 3	7.0	1.0	0	0	7.0	1 0	0	0	7.0	1 0	0	0	0	1.0	175	0	...	...	...	...	...	...	Shorted 0.1 Mfd. Condenser from Plate No. 1 to Cathode
No C.G. Voltage on Tube No. 4	...	...	...	...	...	...	...	...	...	...	...	...	0	8.0	220	2.0	...	...	...	...	...	...	Shorted 0.75 Mfd. Condenser across Detector Bias Resistor
No S.G. Voltage on Tube No. 4	...	...	...	...	...	...	...	...	...	...	...	...	12	0	220	0.5	...	...	...	...	...	...	Shorted 0.25 Mfd. Condenser from S.G. to Cathode Tube No. 4
No C.G. or S.G. Voltages on Tubes Nos. 1, 2 and 3	0	0	110	0	0	0	110	0	0	0	110	0	0	0	200	0	...	...	...	...	...	...	Shorted 0.1 Mfd. Condenser from Ground to Volume Control
Low Plate and S.G. Voltages on Tubes Nos. 1, 2, 3 and 4	1.2	38	80	0.8	1.5	38	82	.8	1.4	30	80	1.5	4.5	9	105	0.5	0	115	58	0	115	58	Shorted 0.1 Mfd. Condenser from Ground to No. 4 Heater
No Voltages on Tube No. 4	2.8	60	170	0.75	3.0	50	160	1.4	2.8	60	165	3.8	20*	0	0	0	...	...	...	...	...	...	Open 17,000-Ohm Resistor
No S.G. Voltage or Plate M.A. on Tube No. 4	2.5	80	165	2.0	2.8	90	165	2.5	3.0	60	165	3.8	5.5	0	220	0	...	...	...	...	...	...	Open 200,000-Ohm Resistor
High C.G. and Low S.G. Volts on Tube No. 4	...	...	...	...	...	...	...	...	...	...	...	...	19	24	210	1.25	...	...	...	...	...	...	Open 12,000-Ohm Resistor Across Volume Control
No Voltages on Tubes Nos. 1, 2 and 3	0	0	0	0	0	0	0	0	0	0	0	0	0	0	260	0	...	...	...	...	...	...	Open 3,200-Ohm Section of Voltage Dividing Resistor
No C.G. or S.G. Voltages on Tubes Nos. 1, 2, 3 and 4	0	0	265	0	0	0	265	0	0	0	265	0	0	0	260	0	...	...	...	...	...	...	Open 3,200-Ohm S.G. Supply Resistor
High C.G. Voltage on Tube No. 4	2.6	65	170	1.1	2.6	83	165	2.5	2.8	60	165	4.0	16	50	210	1.2	...	...	...	...	...	...	Open S.G. Voltage Section of Volume Control
High C.G. Voltage on Tube No. 4	2.0	80	190	2.2	2.2	100	183	4.0	2.6	75	180	5.8	20	70	205	1.3	...	...	...	...	...	...	Open 830-Ohm Section of Voltage Dividing Resistor
Very High C.G. Voltage on Tubes Nos. 1, 2 and 3	255*	0	0	0	255*	0	0	0	255*	0	0	0	16	145	245	1.0	...	...	...	...	...	...	Open 120-Ohm Section of Voltage Dividing Resistor
No S.G. Voltage on Tubes Nos. 1, 2 and 3	1.8	0	195	0	1.8	0	195	0	1.8	0	195	0	7.4	85	230	0.5	...	...	...	...	...	...	Open Volume Control Arm or 12,000-Ohm Resistor
High Plate Current on Tube No. 5	...	...	...	...	...	...	...	...	...	...	...	...	...	...	...	...	0	150	70	6.0	150	0	Open 430,000-Ohm Resistor
High Plate Current on Tube No. 6	...	...	...	...	...	...	...	...	...	...	...	...	...	...	...	...	6.0	150	0	0	150	70	Open 430,000-Ohm Resistor
High Plate Current on Tube No. 5	...	...	...	...	...	...	...	...	...	...	...	...	...	...	...	...	+43	70	85	−8.0	80	0	Shorted .025 Mfd. Condenser
High Plate Current on Tube No. 6	...	...	...	...	...	...	...	...	...	...	...	...	...	...	...	...	−8	80	0	+43	70	85	Shorted .025 Mfd. Condenser

*Caused by meter connection. No voltage present in operation.

RCA-VICTOR, Inc.

(2) VOLTAGE READINGS AT RADIOTRON SOCKETS

The following voltages taken at each Radiotron socket with the receiver in operating condition should prove of value when checking with test sets such as a Weston Model 547, Type 3, or others giving similar readings. The plate currents shown are not necessarily accurate for each tube, as the circuits will oscillate. Small variations of voltages will be caused by different tubes and line voltages. Therefore, the following values must be taken as approximately those that will be found under varying conditions. Figure 12 shows a simplified schematic circuit diagram. The numbers in Column 1 indicate the tube socket numbers shown in Figures 13A and 13B.

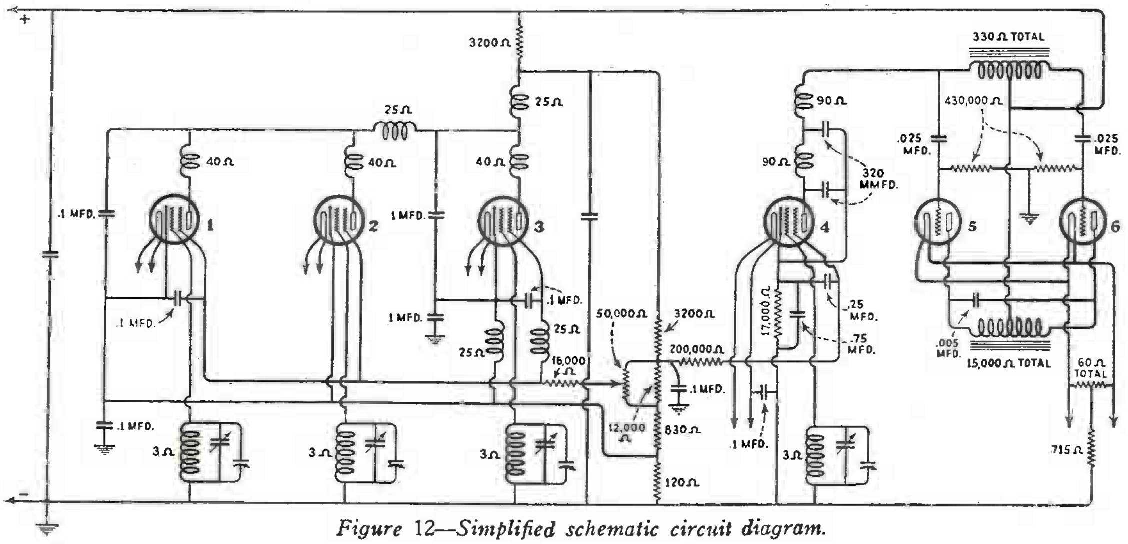

Figure 12—*Simplified schematic circuit diagram.*

RADIOTRON SOCKET VOLTAGES—120-VOLT LINE

Tube No.	Cathode to Heater Volts D.C.	Cathode or Filament to Control Grid-Volts D.C.	Cathode to Screen Grid Volts D.C.	Cathode or Filament to Plate Volts D.C.	Plate Current M. A.	Screen Grid Current M. A.	Heater or Filament Volts
Volume Control at Maximum							
1	—40	—2.5	+85	160	3.0	0.2	2.3
2	—36	—2.5	+85	155	3.5	0.15	2.3
3	—36	—2.5	+75	155	3.5	0.15	2.3
4	—28	—7.5	+55	225	0.5	0.1	2.3
5	—	*—1.0	—	200	25.0	—	2.3
6	—	*—1.0	—	200	25.0	—	2.3
Volume Control at Minimum							
1	—40	—1.0	+ 6	200	0	0	2.3
2	—40	—1.4	+ 6	200	0	0	2.3
3	—40	—0.8	+ 6	200	0	0	2.3
4	—28	—8.4	+75	230	.6	0	2.3
5	—	*—1.0	—	205	25.0	—	2.3
6	—	*—1.0	—	205	25.0	—	2.3

*Not true reading due to resistor in circuit.

RCA-VICTOR, Inc.

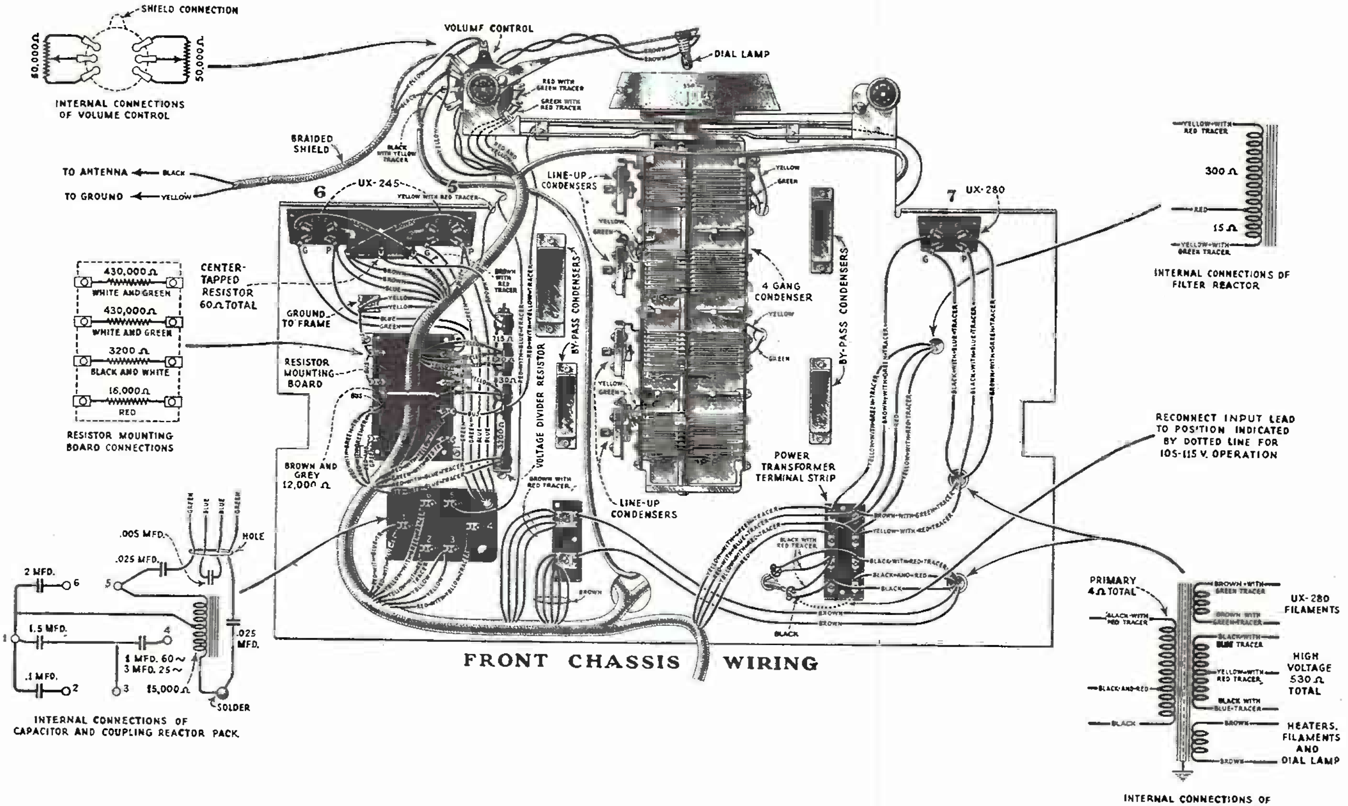

Figure 13A—Layout and wiring diagram of the chassis (front)

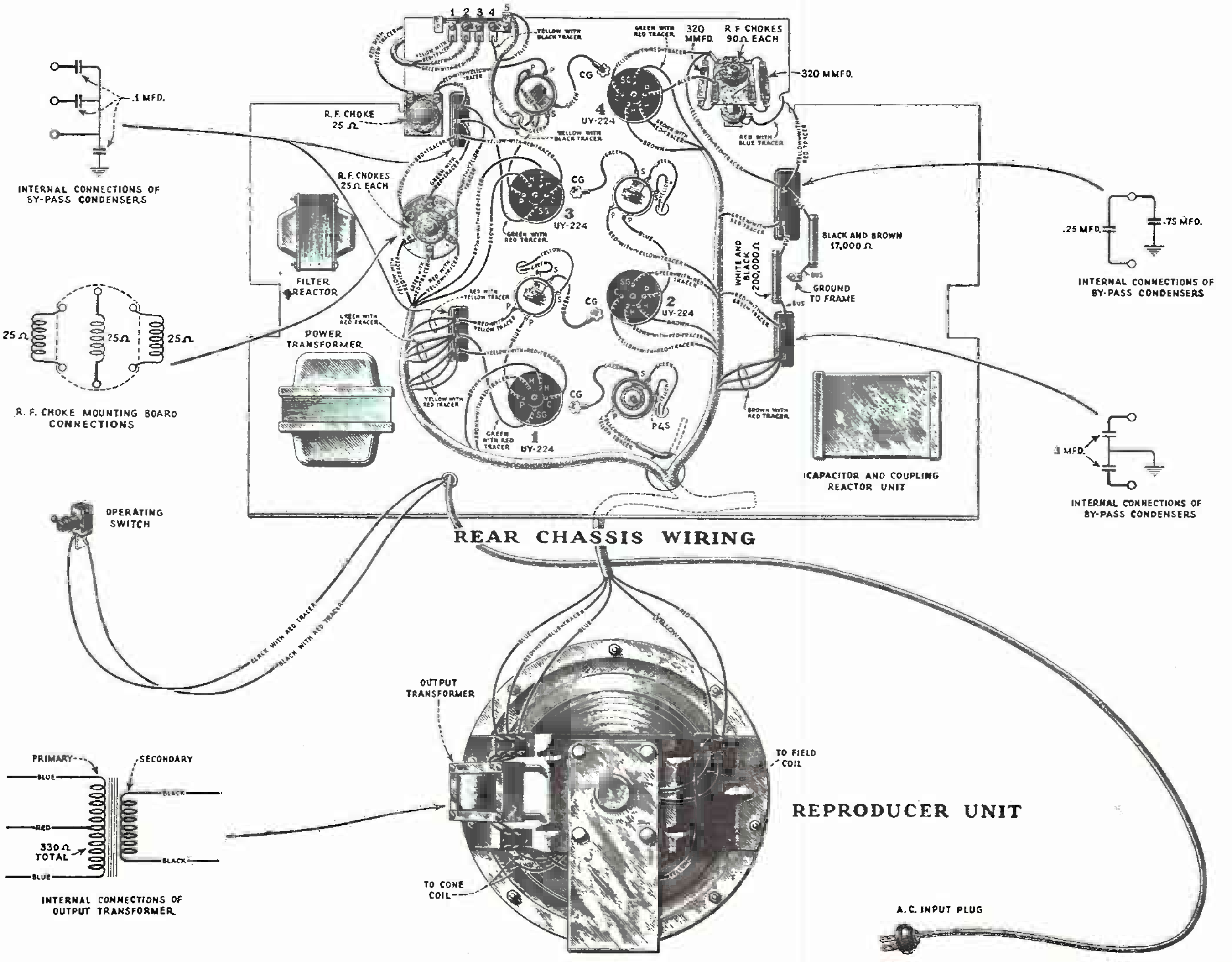

Figure 13B—Complete layout and wiring diagram of the chassis (rear) and reproducer unit

RCA-VICTOR, Inc.

R71 - R72

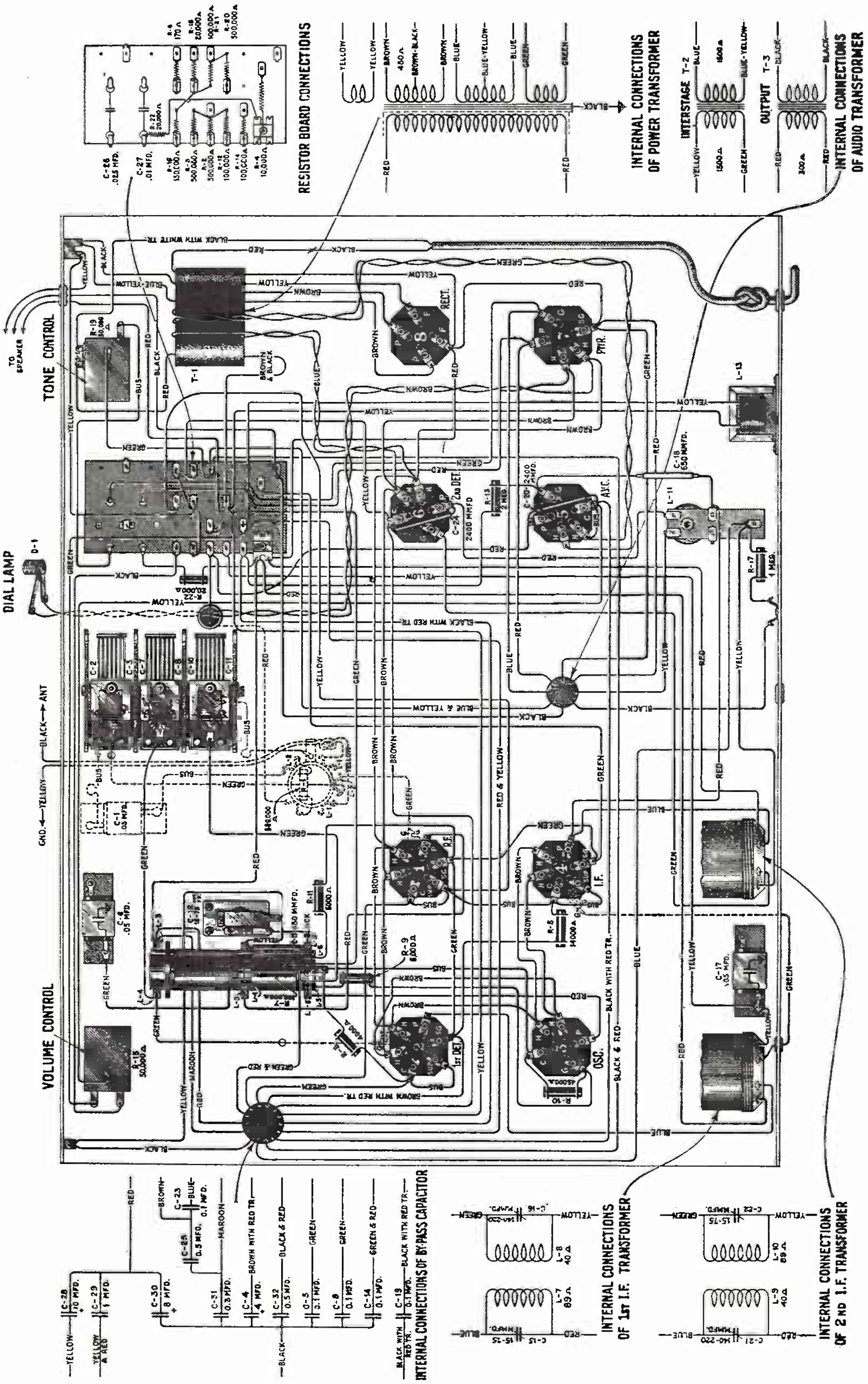

Figure 2—Wiring Diagram

RCA-VICTOR, Inc.

R-72

RCA Victor Models R-71 and R-72 are eight tube Super-Heterodyne radio receivers incorporating such features as Automatic Volume Control, Pentode output, New R. F. Super Control Pentodes, High Efficiency General Purpose Radiotrons and the inherent sensitivity, selectivity and tone quality of the RCA Victor Super-Heterodyne.

Model R-71 is a table type receiver and the R-72 is of the Console type. Except for the loudspeaker, both models are identical. The R-71 uses a six inch speaker while the R-72 uses an eight inch unit.

A reference to the Service Notes already published on the R-11 and R-7 will give details of any service information required on these receivers. Figure 1 shows the schematic diagram and Figure 2 the wiring. The voltage readings are listed below and the replacement parts on the following pages.

120 VOLT A. C. LINE

Radiotron No.	Cathode to Heater, Volts, D. C.	Cathode or Filament to Control Grid, Volts, D. C.	Cathode or Filament to Screen Grid, Volts, D. C.	Cathode or Filament to Plate, Volts, D. C.	Plate Current, M. A.	Heater or Filament, Volts, D. C.
VOLUME CONTROL AT MINIMUM						
1—R. F.	**2.0	*1.2	110	280	0	2.5
2—1st Det.	0	*1.5	110	280	0	2.5
3—Osc.	——	——	——	90	5.5	2.5
4—I. F.	**2.0	*2.0	110	280	0	2.5
5—A. V. C.	——	1.0	——	10	0	2.5
6—2nd Det.	——	6.0	——	260	1.0	2.5
7—Pwr.	——	20.0	275	265	35.0	2.5
VOLUME CONTROL AT MAXIMUM						
1—R. F.	**4.0	*0.1	100	260	5.0	2.5
2—1st Det.	**10.0	*1.0	95	250	2.0	2.5
3—Osc.	——	——	——	75	4.5	2.5
4—I. F.	**4.0	*1.8	100	260	3.0	2.5
5—A. V. C.	——	2.0	——	20	0	2.5
6—2nd Det.	——	7.0	——	240	1.0	2.5
7—Pwr.	——	20.0	275	265	30.0	2.5

*On 5 Volt, 1000 Ohm per Volt Meter.
**On 50 Volt, 1000 Ohm per Volt Meter

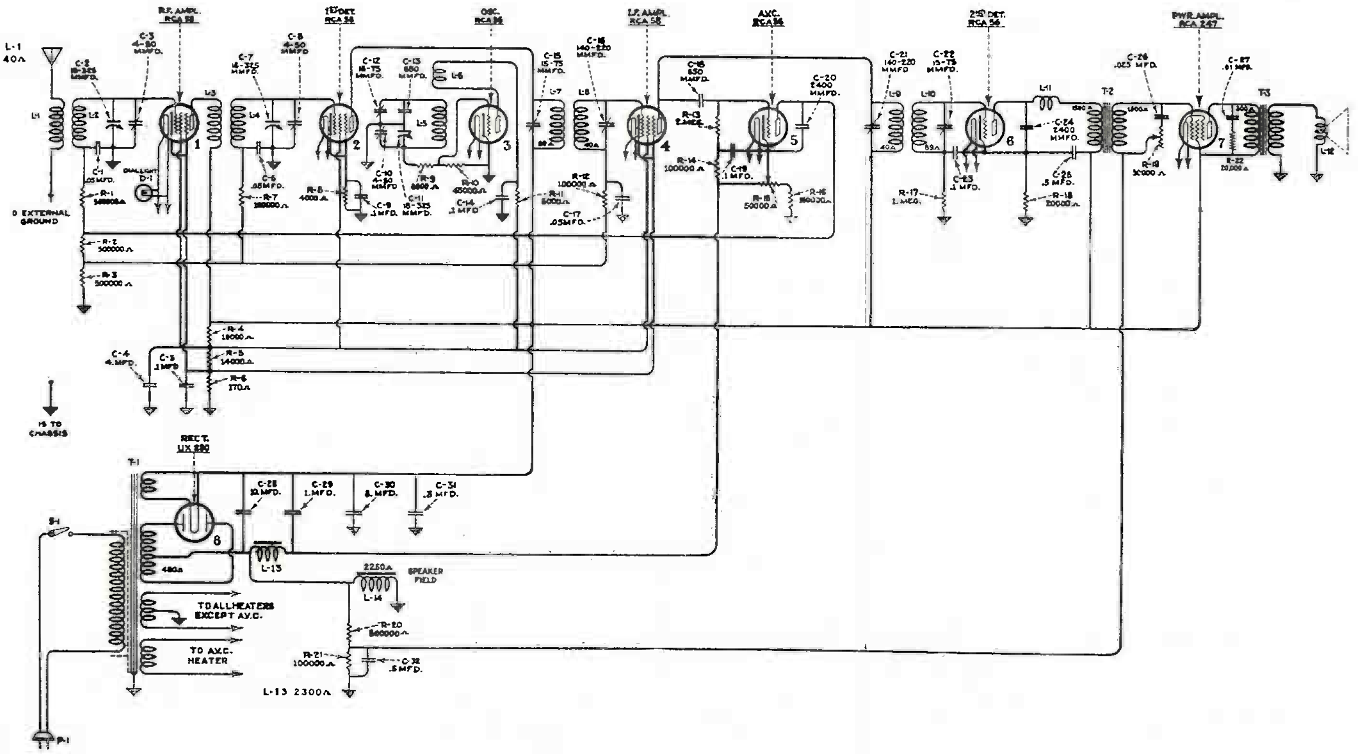

Figure 1—Schematic Circuit Diagram

RCA-VICTOR, Inc.

SERVICE NOTES

for

RCA Victor Radiola Automatic Electrola, RAE-79

The RCA Victor Model RAE-79 is a thirteen tube, super-heterodyne radio receiver incorporated in the same cabinet with the perfected RCA Victor automatic record changing mechanism.

Features of this instrument are:

RCA Victor DeLuxe Radio Chassis incorporating Super Control Radiotrons, automatic volume control giving a new degree of quiet operation, remote control of tuning and volume, double push-pull amplifiers employing Pentode Output Radiotrons, and twin loudspeakers. The automatic record changing mechanism has provision for playing continuously, one side of ten 10-inch records of either the "standard" or Program Transcription variety and either type twelve inch records manually. Home recording on the RAE-79 reaches a new degree of perfection through the use of a studio type two button microphone and Pentode Output Radiotrons. Such records may be made either 78 or 33⅓ R.P.M. thus giving a maximum of eight minutes of home recording on a ten inch record.

SERVICE DATA

A reference to the R-50 and R-55 Service Notes covers the general service data on this type of instrument. The service data on the automatic record changing mechanism is contained in a booklet already issued. The service data on the remote control unit, while similar to that used in the Radiolas 82 and 86, is contained in this booklet, see Part I, page 3. Part II gives miscellaneous information on various parts, Part III shows the diagrams and Part IV is the replacement parts list.

PART I

SERVICE DATA ON REMOTE CONTROL UNIT

The Remote Control Contactors of Model RAE-79 are adjusted at the Factory with a 115 volt A. C. input being applied to the receiver. Due to the extreme selectivity of the receiver used, it may be necessary to readjust the motor contactors when the instrument is used on extremely high or low line voltages. The following test covers these adjustments thoroughly.

This is also true on Models used at frequencies other than that specified. For example, when a 60 cycle model is used on 50 cycles, the phonograph motor must be changed and the remote control contactors completely readjusted.

The remote control feature is unique in that it not only allows control of the receiver from a distant point but also pre-selects the desired station accurately. Manual tuning, other than necessary for the original setting of the selector buttons, is therefore eliminated. Selection of any one of four stations, adjustment of the volume control, turning the receiver "on" or "off" or changing from Radio to Record may be accomplished at one or more remote points from the receiver. Operation of the tone control or home recording must be done at the receiver.

One control box and twenty-five feet of flat cable are supplied. If desired, any number of additional units may be installed or the cable lengthened to seventy-five feet.

Electrical Description of Unit

The remote control feature consists of a standard R-50 chassis with a special gang condenser; a capacitor motor coupled to the gang condenser through a series of gears; a series of drums and contactors by which the motor is started in the right direction for a given station and stopped at the right point; a special volume control geared to the motor; a relay to turn the set "on" or "off" and a remote control box by which these operations are controlled.

RCA-VICTOR, Inc.

The motor is provided with a tapped reactor and condenser for changing the phase angle of the applied current so that operation in either direction may be secured. The motor operates at 23 volts for the station selector and 18 volts for the volume control.

Referring to Figure 1 we see the normal position of the motor armature. It will be noted that a spring holds the armature so that the gear at one end is meshed with the volume control gears. At 18 volts, the voltage used for volume control operation, the gears remain in this position and operation of the volume control is secured. When the speed of the motor is increased by operating it at 23 volts, this voltage being used when the selector buttons are pressed, the end thrust of the armature causes it to move laterally, thereby disengaging the gear at the volume control end and engaging the gear at the station selector end. See Figure 2. The spring at the end of the armature causes it to always return to the volume control position when the current is "off" at the motor. As this action takes place with the motor operating in either direction, controlling the voltage at which the motor is operated determines its function. A sixty ohm resistor is placed in each motor circuit controlling the volume to reduce the voltage from 23 to 18 volts.

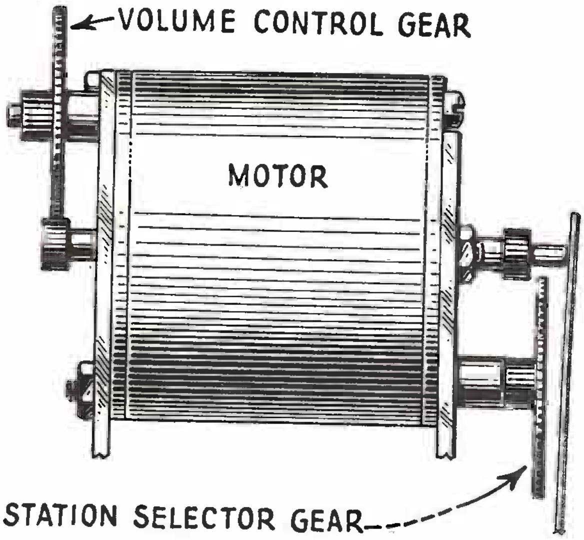

Figure 1—Motor with armature in volume control position

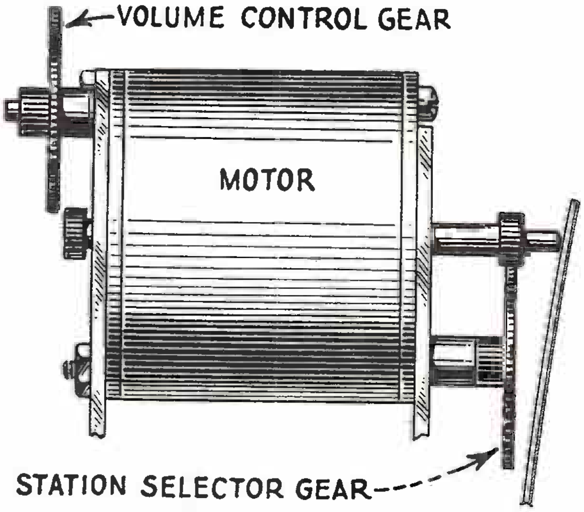

Figure 2—Motor with armature in station selector position

The proper direction of operation and stopping of the motor for selection of a desired station is controlled by a series of drums and contactors. Figure 3 shows a schematic circuit of the motor and its adjacent circuits. The drums hold the contactors in the proper position so that when a particular selector button is depressed, the motor will turn in the right direction. When the contactor is at the point on the drum where it is half way between each contact, the motor stops. This is 180° from the hole that is used to set the drum for a particular station.

The setting of the drums is made by the pins on the front panel. These are known as the "setting buttons." The selector button is pressed and the drum is moved by the motor until the corresponding contactor is midway between the contacts. The pin will now fall in the hole in the drum if pushed in by the finger. See Figure 4. Holding the pin firmly in the hole, the desired station is then accurately tuned in by means of the manual station selector knob. After tuning the pin is then released. As the point on the opposite side of the drum is where the diameter of the drum changes, the contactor is half way between the contacts. Pressing the selector buttons will therefore cause no movement of the motor. If another button is pressed and the drum moved, pressing the original button will always bring the drum back to the position for which it was set.

Referring to Figure 10, the schematic diagram, it will be noted that a common lead is used for the pilot lamp and the selector buttons in the remote control box. By doing this, when a selector button on the box is pressed, the current through the common lead is increased, likewise the voltage drop in the lead is increased. The result is that while the motor is running the pilot lamp becomes very dim. As soon as the motor stops, the lamp flashes bright, thus indicating that the motor has stopped and the station is tuned in. If the station is not then heard, it is necessary to press the + volume control button a little at a time until the desired output level is obtained.

RCA-VICTOR, Inc.

Special Installations

(1) INCREASING LENGTH OF REMOTE CONTROL BOX CABLE

The cable to the remote control box supplied with the remote control models is twenty-five (25) feet in length. This is ample for most rooms as it is very rare that a person wishes to listen to a program at a greater distance from the loudspeaker.

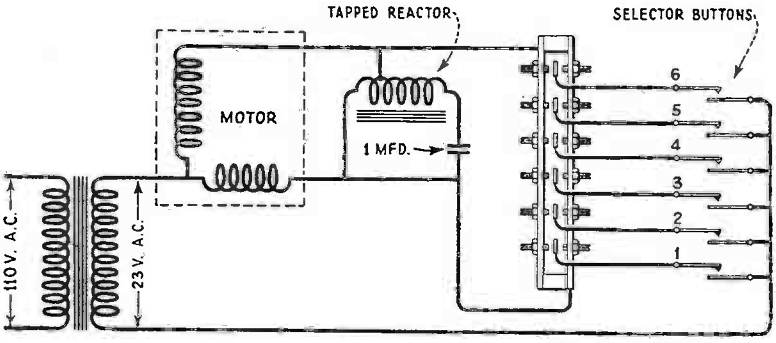

Figure 3—Schematic diagram of motor circuits

If, however, it is desired to place the remote control box at a greater distance from the set, any twelve conductor cable, the wires of which are No. 14 or larger in size, may be used to splice onto the regular cable and increase the total length up to seventy-five (75) feet. Figure 5 shows the method recommended for adding this additional cable.

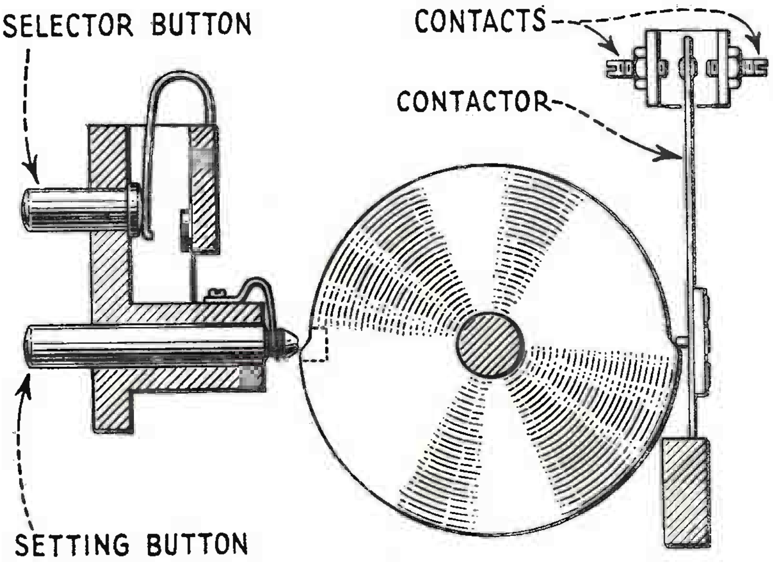

Figure 4—End view of drum and contactor

(2) INCREASING NUMBER OF REMOTE CONTROL BOXES

One remote control box is supplied as standard equipment. Any number of additional boxes may be installed if desired although only one box can be used at a time for controlling the receiver. The boxes should be connected in parallel at the terminal strip on the rear of the Radiola. Figure 11 shows such a connection.

RCA-VICTOR, Inc.

MOTOR CONTACTOR ADJUSTMENT CHART

Repeat Entire Procedure on Station Selector Contactors

TURN STATION SELECTOR KNOB UNTIL CONTACTOR IS TO ONE SIDE

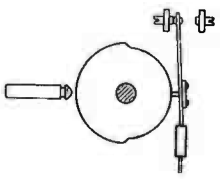

1

PUSH SELECTOR BUTTON ON PANEL UNTIL THE MOTOR STOPS AND CONTACTOR IS CENTERED

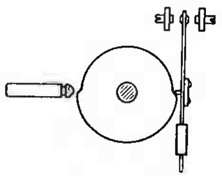

2

THEN PUSH SETTING BUTTON. IF CONTACTOR DOES NOT MOVE, ADJUSTMENT IS O.K.

3

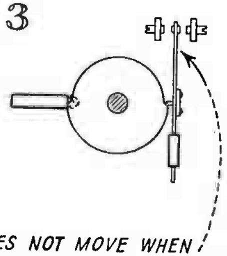

DOES NOT MOVE WHEN SETTING BUTTON IS PRESSED

IF CONTACTOR MOVES IN THIS DIRECTION WHEN SETTING BUTTON IS PRESSED, ADJUST AS INDICATED.

4

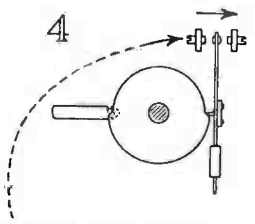

TURN THIS SCREW CLOCKWISE A LITTLE AT A TIME UNTIL CONTACTOR DOES NOT MOVE WHEN SETTING BUTTON IS PRESSED. (TURN SELECTOR KNOB AND RETUNE WITH SELECTOR BUTTON AFTER EACH TRIAL ADJUSTMENT)

IF CONTACTOR MOVES IN OTHER DIRECTION, ADJUST AS INDICATED.

5

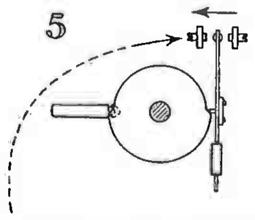

TURN THIS SCREW COUNTER CLOCKWISE A LITTLE AT A TIME UNTIL CONTACTOR DOES NOT MOVE WHEN SETTING BUTTON IS PRESSED. (TURN SELECTOR KNOB AND RETUNE WITH SELECTOR BUTTON AFTER EACH TRIAL ADJUSTMENT)

AFTER MAKING PRECEDING ADJUSTMENTS TURN STATION SELECTOR KNOB UNTIL CONTACTOR IS TO THIS SIDE

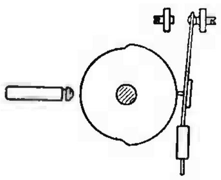

6

PUSH SELECTOR BUTTON ON PANEL UNTIL THE MOTOR STOPS AND CONTACTOR IS CENTERED

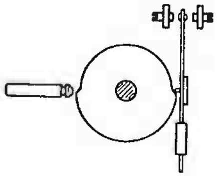

7

THEN PUSH SETTING BUTTON. IF CONTACTOR DOES NOT MOVE, ADJUSTMENT IS O.K.

8

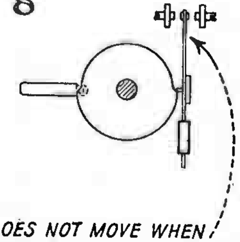

DOES NOT MOVE WHEN SETTING BUTTON IS PRESSED.

IF CONTACTOR MOVES IN THIS DIRECTION WHEN SETTING BUTTON IS PRESSED, ADJUST AS INDICATED.

9

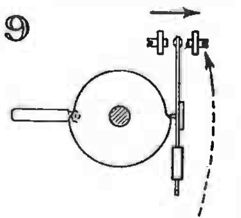

TURN THIS SCREW COUNTER CLOCKWISE A LITTLE AT A TIME UNTIL CONTACTOR DOES NOT MOVE WHEN SETTING BUTTON IS PRESSED. (TURN SELECTOR KNOB AND RETUNE WITH SELECTOR BUTTON AFTER EACH TRIAL ADJUSTMENT)

IF CONTACTOR MOVES IN THIS DIRECTION, ADJUST AS INDICATED. THEN REPEAT ALL ADJUSTMENTS ON ALL SIX CONTACTORS.

10

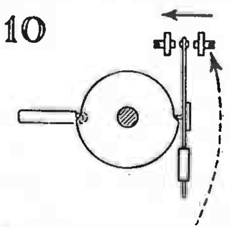

TURN THIS SCREW CLOCKWISE A LITTLE AT A TIME UNTIL CONTACTOR DOES NOT MOVE WHEN SETTING BUTTON IS PRESSED. (TURN SELECTOR KNOB AND RETUNE WITH SELECTOR BUTTON AFTER EACH TRIAL ADJUSTMENT)

Adjustments

(1) ADJUSTMENT OF MOTOR CONTACTORS

The four station selector motor contactors located at the rear of the motor may require adjustment due to changes in the amount of friction in the entire drive assembly. Need for adjustment is evidenced by the motor failing to stop at the exact point for a particular station.

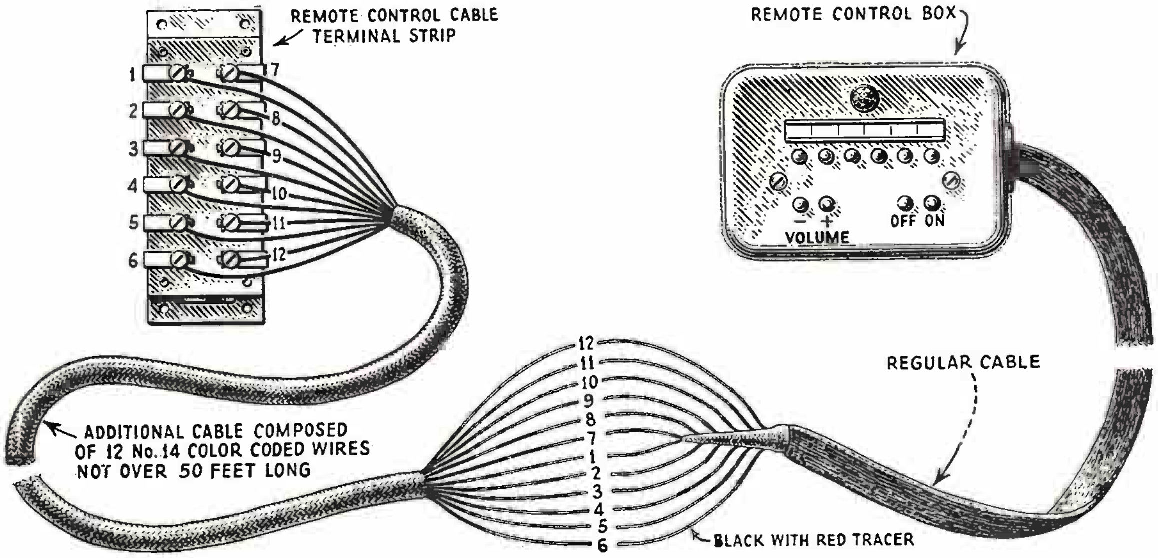

Figure 5—Wiring diagram of method for connecting additional cable

In order to make these adjustments two tools are necessary. They may be constructed, see Figure 7, or obtained as a spare part, the replacement parts section listing them. The chart on page 6 gives the procedure to be followed for making adjustments. This procedure must be repeated on each contactor that is out of adjustment.

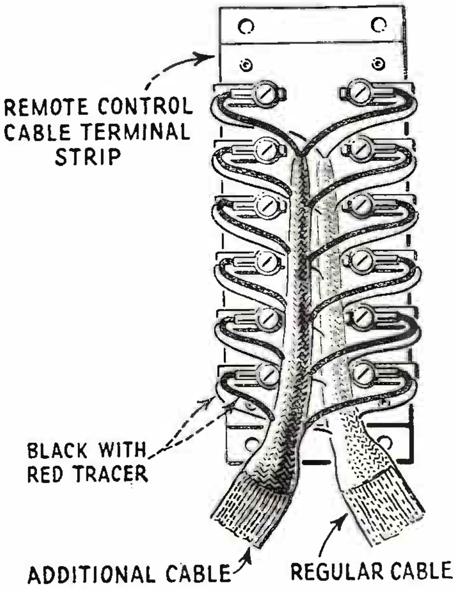

Figure 6—Connections for adding additional boxes

If all contactors are out of adjustment in a similar manner, then the friction screw, see Figure 8, requires adjustment. This should be either tightened or loosened, the exact adjustment to be determined by trial. The adjustment that is correct for one contactor will be correct for all, assuming the friction screw to be at fault.

(2) REPLACING OR ADJUSTING CONTACTORS

Six contactors are used for connecting the motor so that it rotates in the proper direction. To make this adjustment or replacement, a special offset screw driver will be required unless the unit is to be removed from the base. This is shown in Figure 12 and is also listed in the replacement parts, see page 15.

Referring to Figure 4 we see that when the setting button is in the hole in the drum, the contactor for that particular drum is exactly half way between the contacts. The holes that hold the contactors are elongated so that they may be raised or lowered until they rest exactly half way between the contacts when the setting button is inserted in the drum hole. This is the only adjustment required of these contactors, and with the special screw driver is quite easy to make.

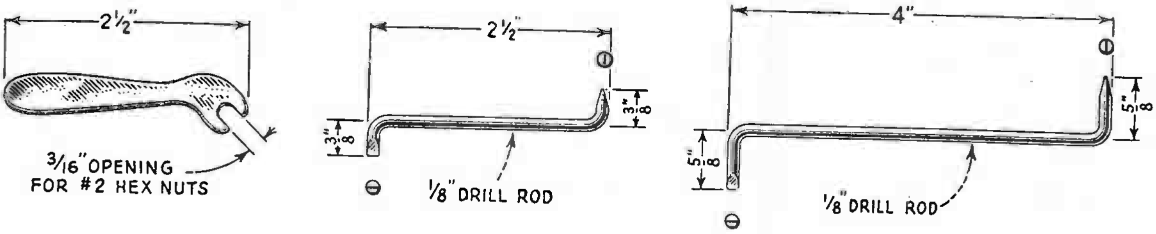

Figure 7—Constructional details of special tools used with remote control models

(3) MAKING REPLACEMENTS

The operating relay, the resistors, the motor, the gears and other small parts may be replaced. All power transformers when replaced must have the primaries so connected that the pilot light on the remote control box lights properly. If the transformers are improperly phased, the lamp will brighten instead of dim when a selector button is pressed. The drum assembly is specially fitted and assembled and any individual replacements can not be made. If trouble is experienced in this assembly, a complete replacement of the unit will be required. The parts replaceable are listed in the replacement parts, page 15.

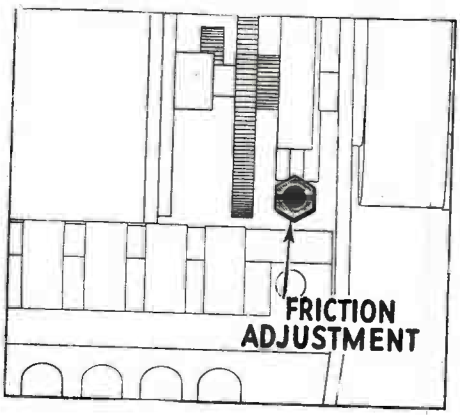

Figure 8—Location of Friction Adjustment

RCA-VICTOR, Inc.

PART II—SELECTOR SWITCH AND MISCELLANEOUS INFORMATION

(1) BENDIX LOUDSPEAKER SWITCH

At the end of the selector switch motor a switch is located that shorts the cone coil when the instrument is changing from one function to another.

The switch is operated by the lateral thrust of the motor wherever it goes into operation. If for any reason, noise should be heard when changing from Radio to Record or Home Recording, it may be due to this switch not functioning. Bending the lever so that it makes proper contact will remedy this condition.

(2) PRECAUTIONS WHEN MAKING RADIO RECORDING RECORDS

When making radio recording records, it is necessary that the radio volume be adjusted for its greatest undistorted output if good quality records are to be obtained. While using the maximum undistorted output it is also important that the volume control should not be advanced beyond this point, as it is possible that the maximum *distorted* output, if fed into the pickup long enough, will cause the pickup coil to heat and its wax to run out.

(3) SERVICE DATA ON MICROPHONE

The Microphone used on Model RAE-79 is a two-button studio type that has excellent frequency characteristics and is simple and rugged in construction. Generally, any failure in the microphone can be remedied only by replacing the unit. However, an unbalance in the buttons may be corrected by means of a small adjustment. The following procedure details the correct manner in making this adjustment. Refer to Figure 9.

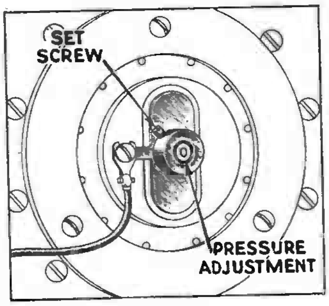

Figure 9—Details of Microphone Adjustment

(a) Remove the microphone from its shell. Be careful not to lose its supporting springs. Measure the D. C. resistance of each button. This may vary from 200 to 1000 ohms, but each button should be measured within 50% of the other.

(b) Loosen the set screw shown in Figure 9, and adjust the pressure of the cup by either increasing or decreasing its pressure against the diaphragm. Increasing the pressure reduces the resistance and decreasing it, increases the resistance of the button. Usually it is best practice to match the buttons by increasing the resistance rather than by decreasing it. Be very careful however to avoid spilling any carbon granules.

PART III—WIRING DIAGRAM

The following pages show the various schematic and wiring diagrams of the RAE-79. Reference to these illustrations is necessary when doing various service work, especially replacing parts.

RCA-VICTOR, Inc.

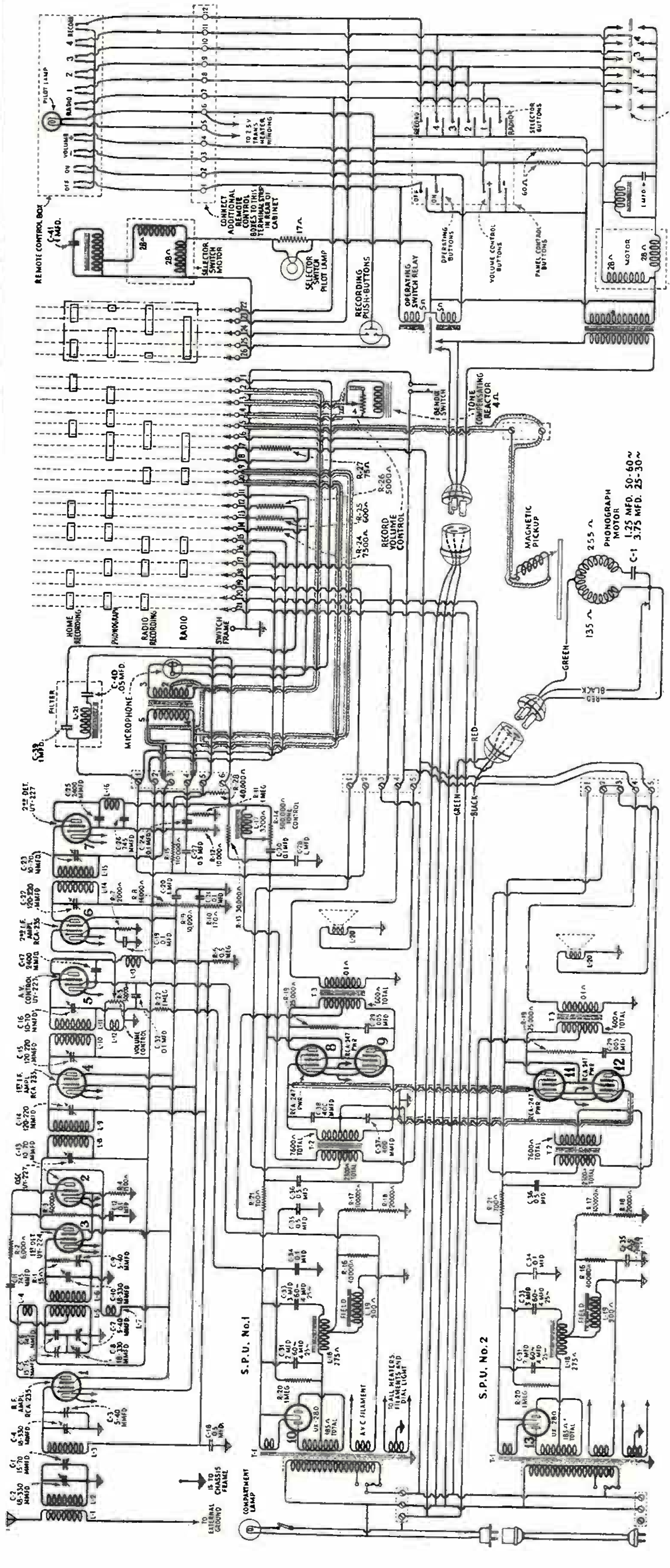

Figure 10—Schematic diagram of Model RAE-79

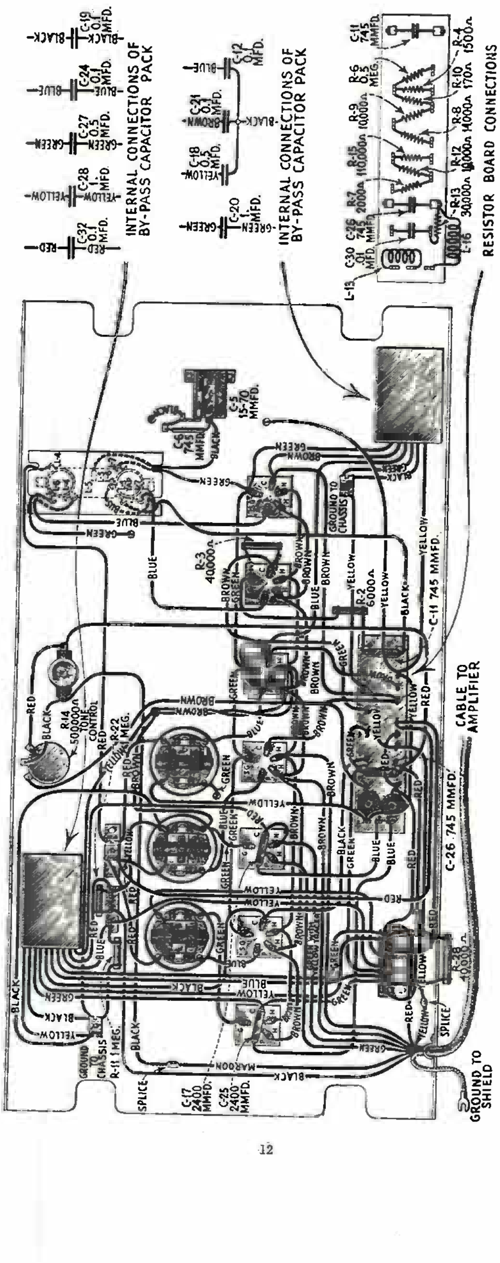

12

Figure 12—Receiver Assembly Wiring

RCA-VICTOR, Inc.

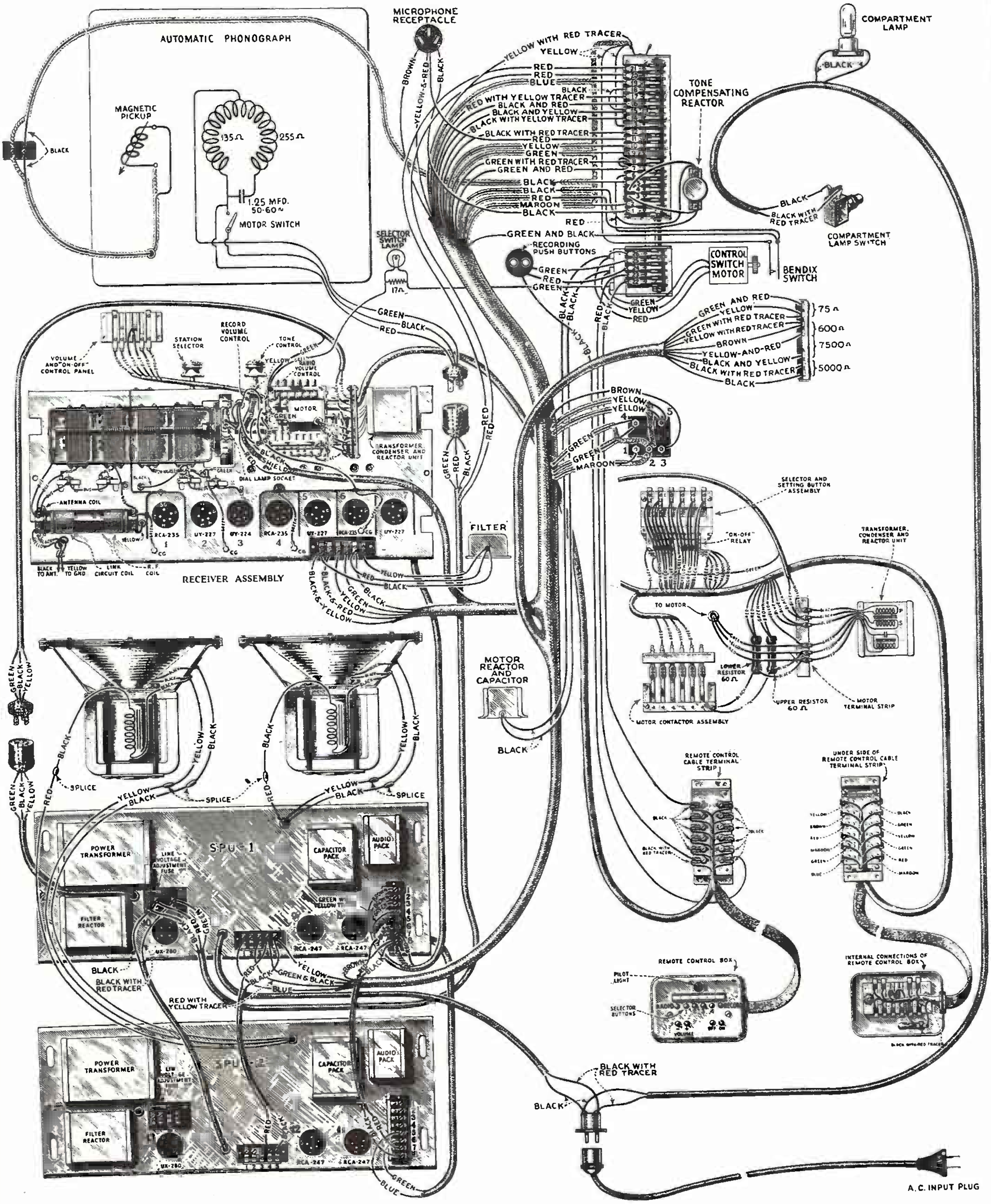

Figure 11—Assembly Wiring diagram

RCA-VICTOR, Inc.

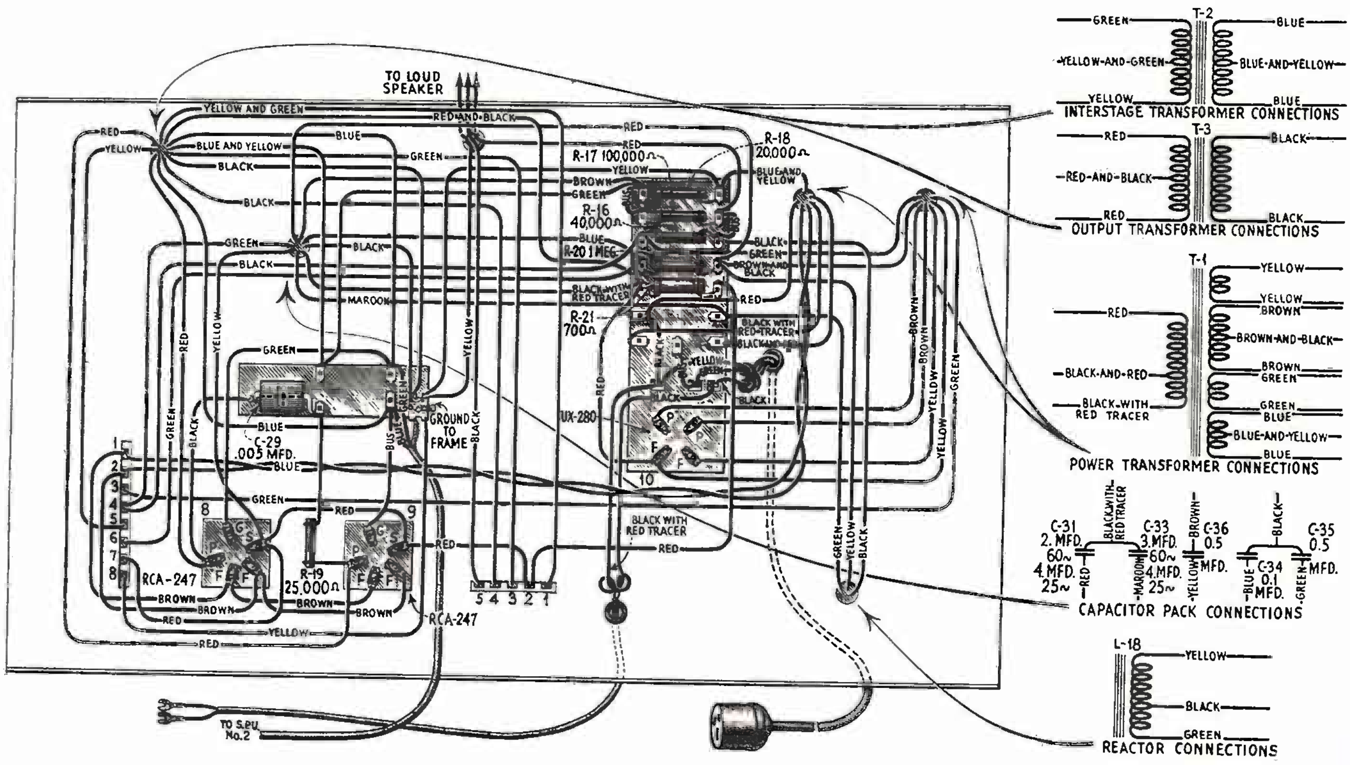

Figure 13—S. P. U. No. 1 wiring

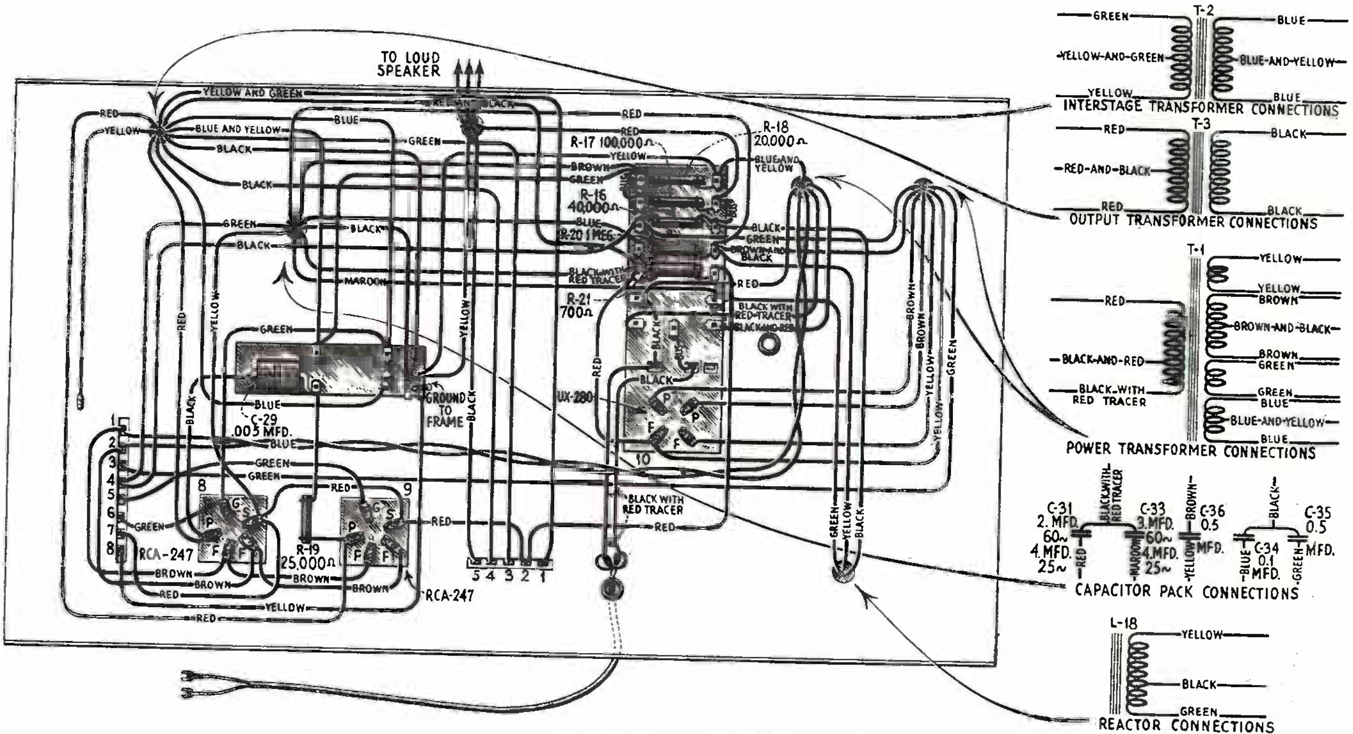

Figure 14—S. P. U. No. 2 wiring

RCA-VICTOR, Inc.

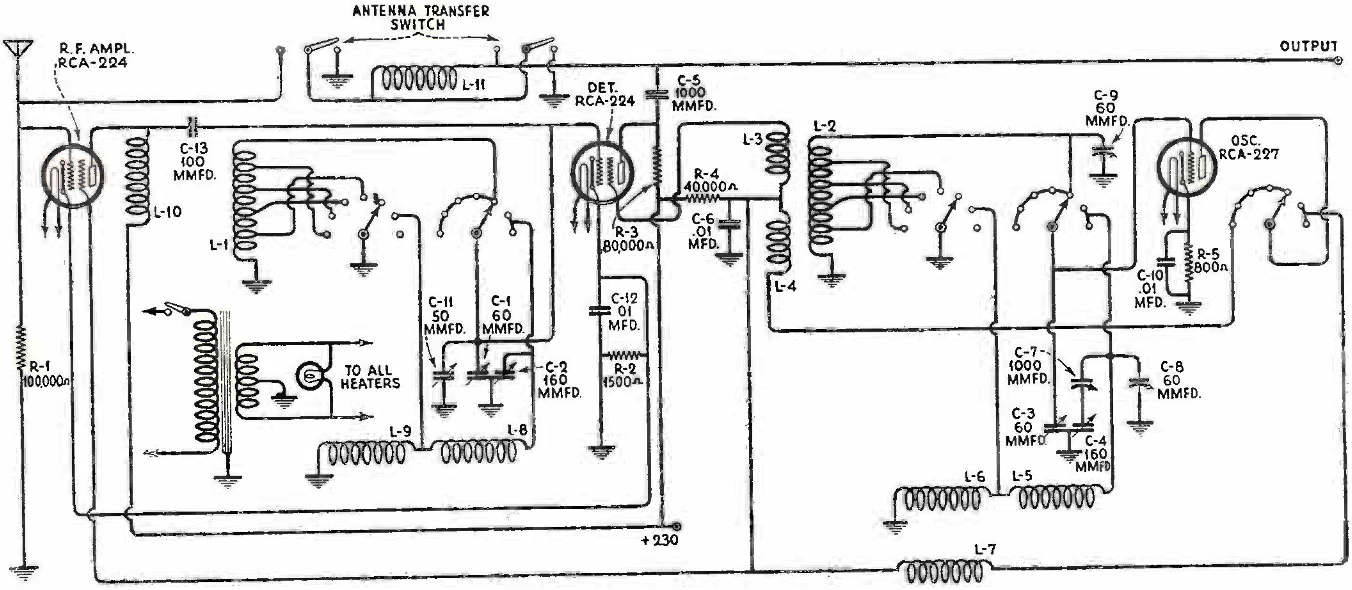

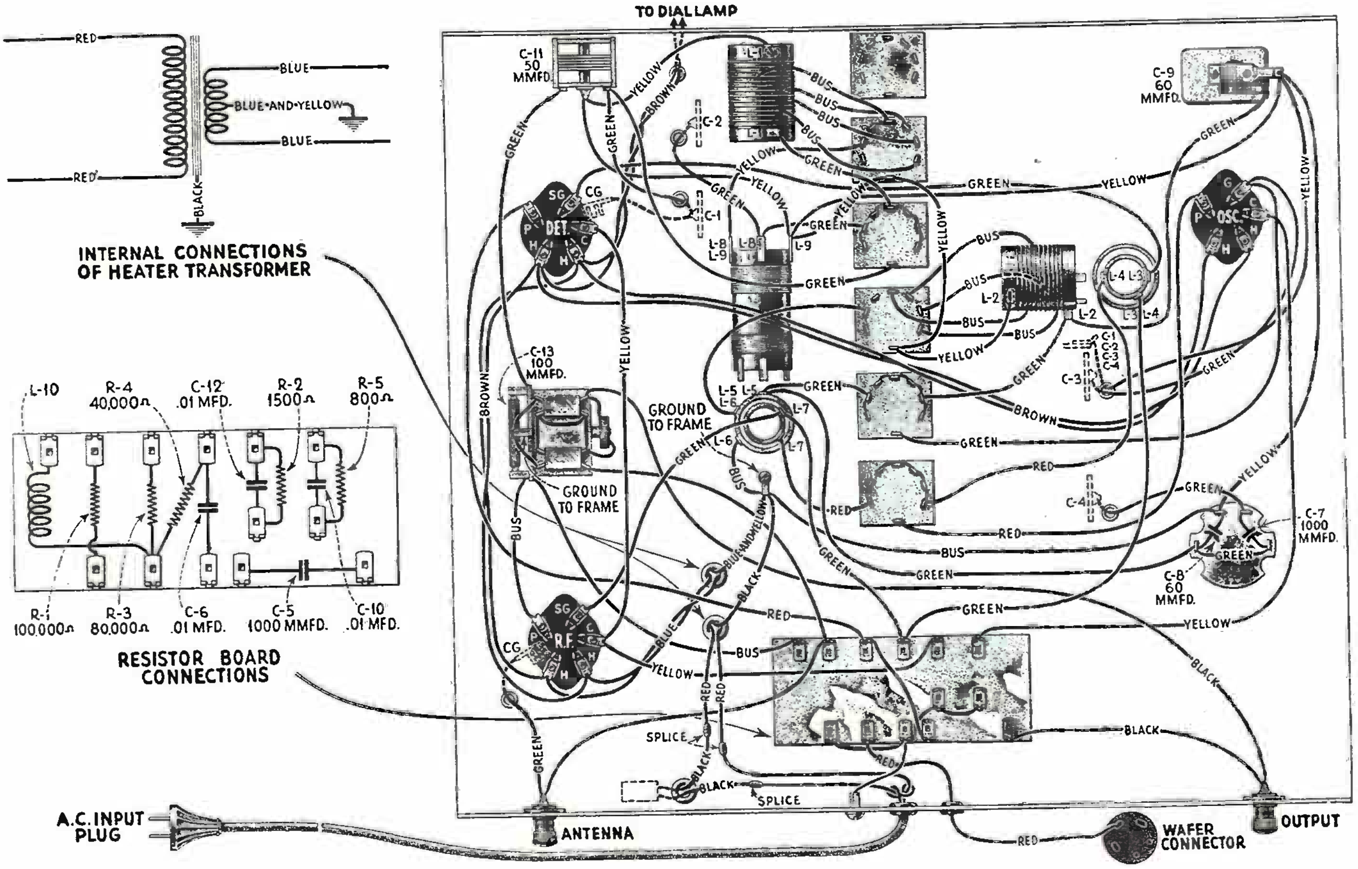

RCA-VICTOR, Inc.

S.W. ADAPTER

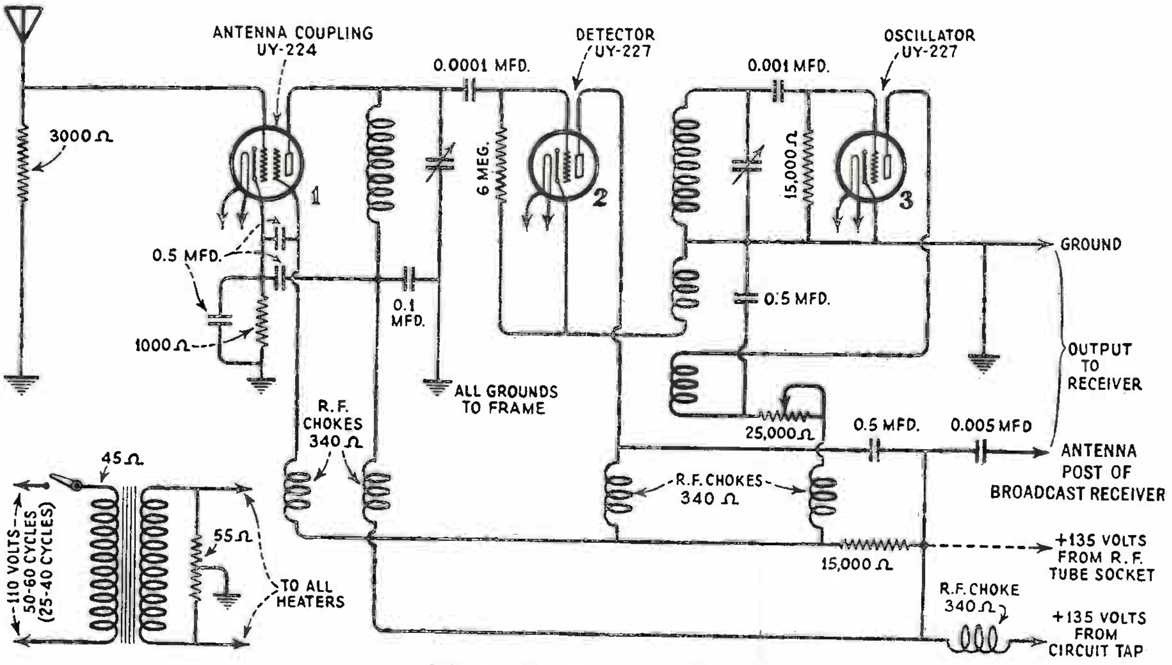

Schematic diagram of Short Wave Adaptor

OSCILLATOR INTENSITY CONTROL AT MAXIMUM

Socket No.	Cathode to Heater Volts D. C.	Cathode to Control Grid Volts D. C.	Cathode to Screen Grid Volts D. C.	Cathode to Plate Volts D. C.	Heater Volts A. C.	Plate Current M.A. D.C.	Screen Grid Current M.A. D.C.
1	—1	—1	43	125	2.45	1.10	0.25
2	0	—1.3*	—	50	2.45	2.0	—
3	0	—0.4*	—	45	2.45	2.8	—

OSCILLATOR INTENSITY CONTROL AT MINIMUM

Socket No.	Cathode to Heater Volts D. C.	Cathode to Control Grid Volts D. C.	Cathode to Screen Grid Volts D. C.	Cathode to Plate Volts D. C.	Heater Volts A. C.	Plate Current M.A. D.C.	Screen Grid Current M.A. D.C.
1	—1.2	—1.2	54	127	2.45	1.25	0.28
2	0	0	—	56	2.45	3.0	—
3	0	—0.3*	—	23	2.45	1.7	—

*Measured on 50 volt range. Is inaccurate because of voltmeter resistance in shunt with grid circuit resistance. Actual grid voltage is slightly higher than the readings.

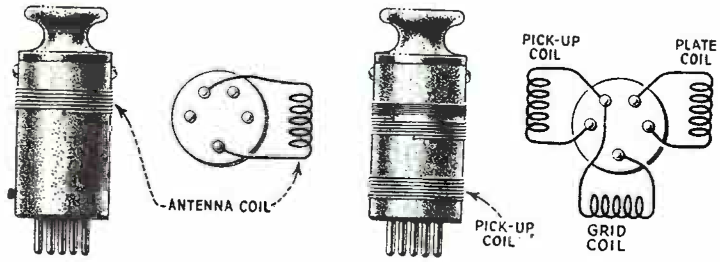

Internal connections of Plug-in Coils

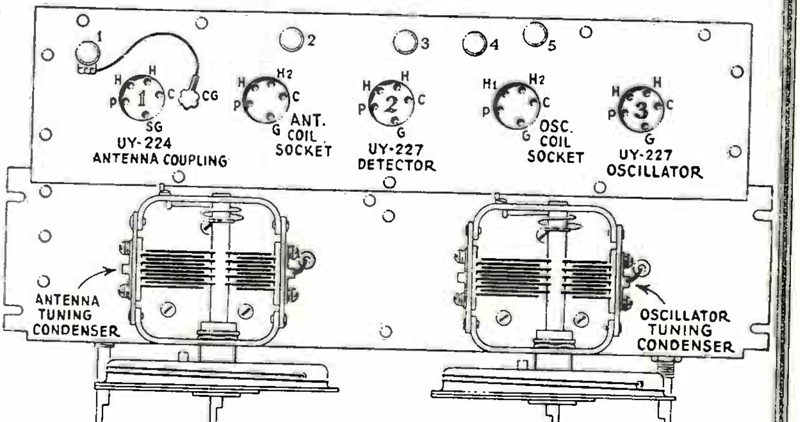

Test points of Short Wave Adaptor

REMLER COMPANY, Ltd.

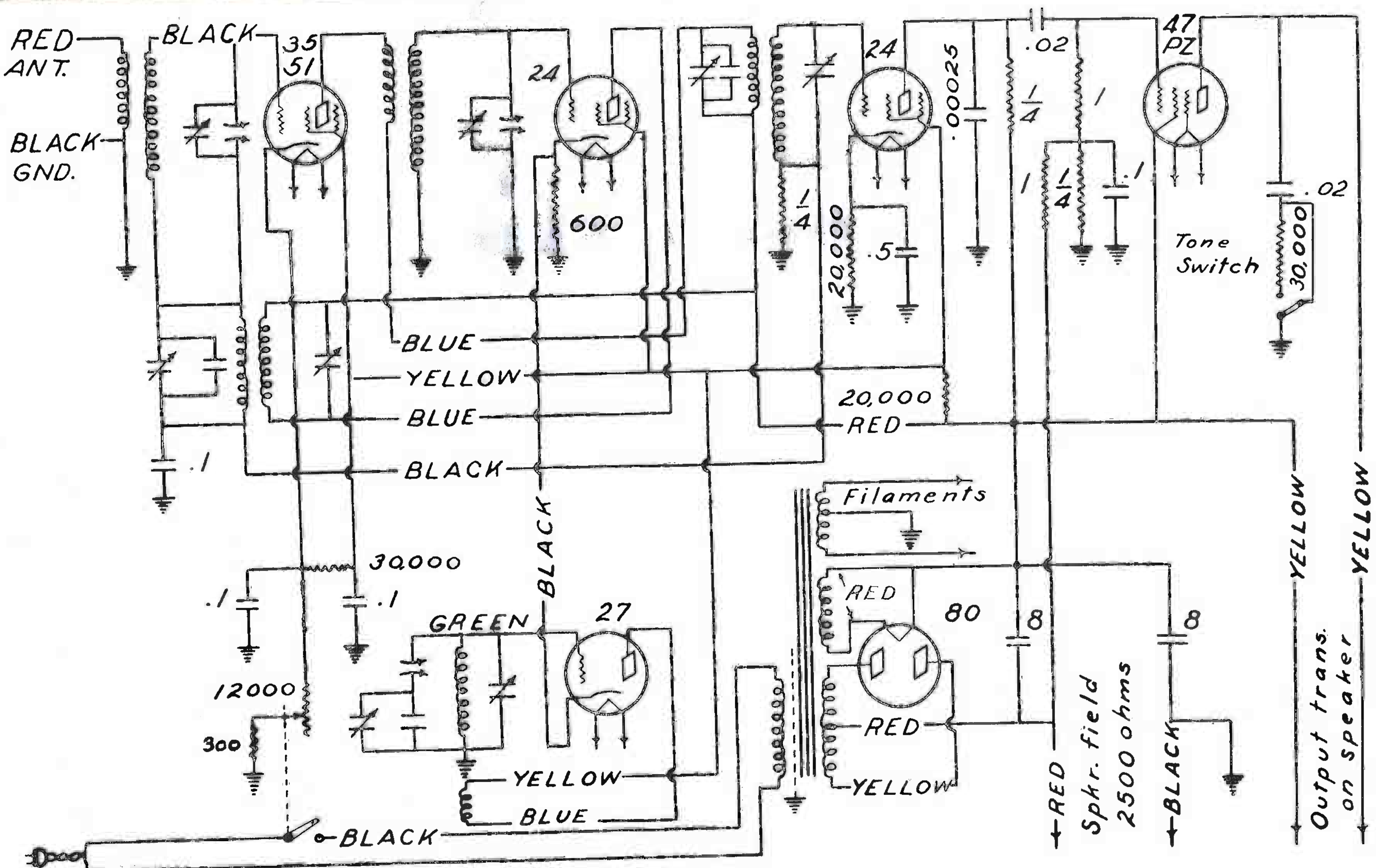

MODEL 10

VOLTAGE TABLE

LINE 118 V. 60 ∿

TUBE	POSITION	FIL.V.	GRID.V.	PLATE.V.	S.G.V.
51	R.F.-I.F.	2.4	3-25	255	60
224	MIXER	2.4	5	255	60
227	OSC.	2.4	5	60	
224	DET.	2.4	5	140	60
PZ	POWER	2.4	20	250	255
280	RECTIFIER	4.8		375	

REMLER COMPANY, Ltd.

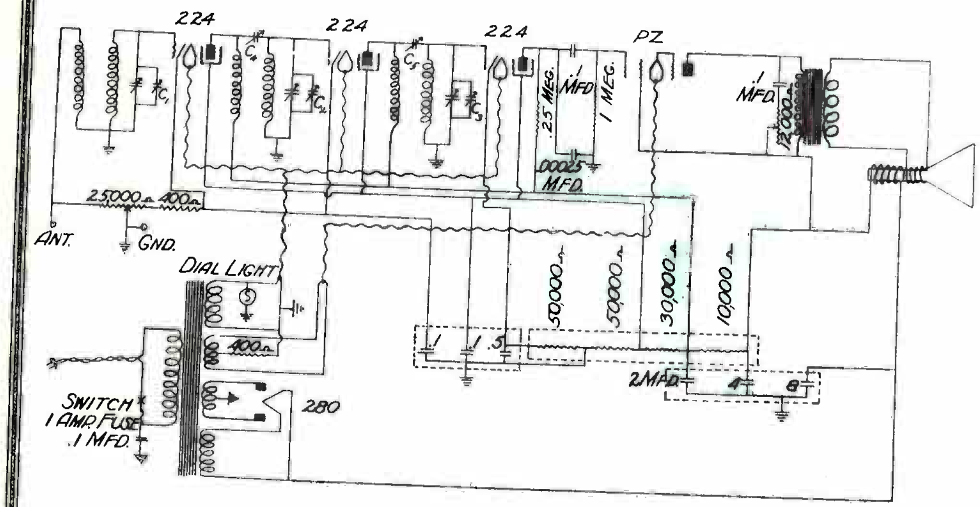

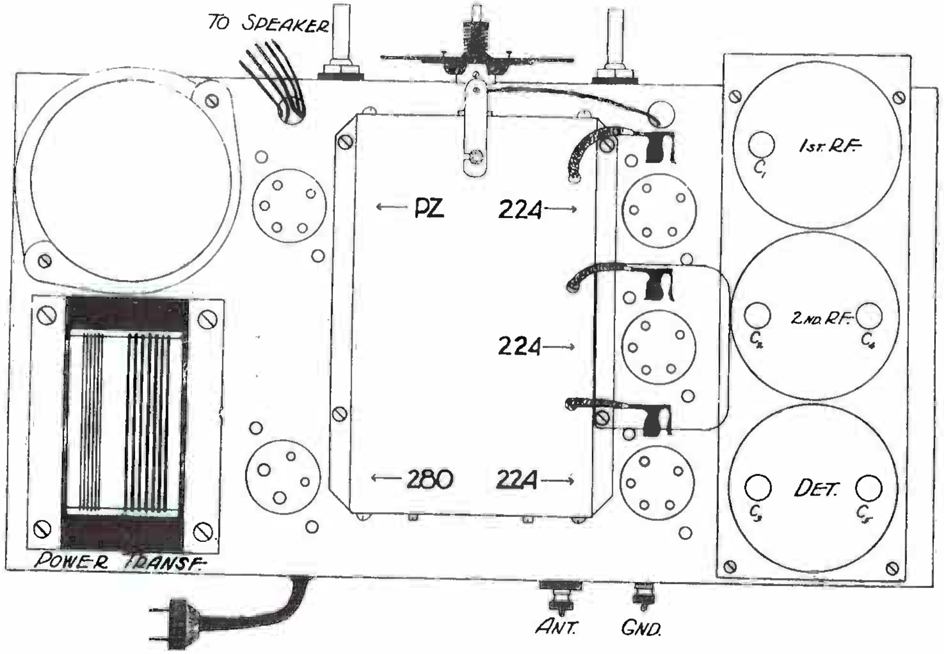

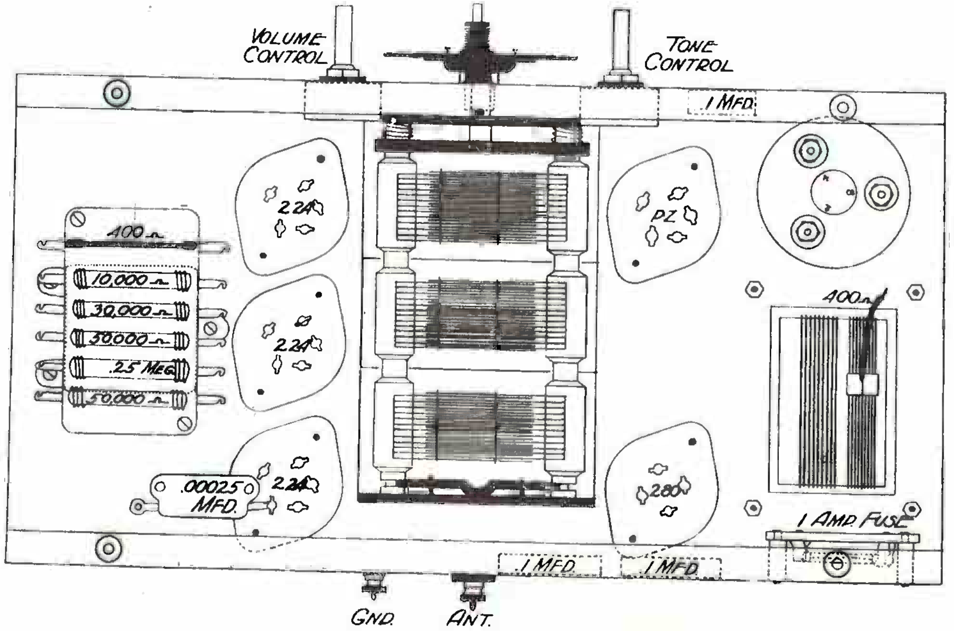

WIRE COLOR CODE

RED - FIL. RECT. - CATHODE R.F. - B + A.F. - PLATE R.F. SPEAKER FIELD

BLUE - FIL. A.F. - PLATE DETECTOR - B + R.F.

YELLOW - SHIELD GRID - PLATES OF RECTIFIER - PLATE A.F.

BLACK - FILAMENT - LINE SWITCH - DETECTOR CATHODE GROUND SPEAKER FRAME

VOLTAGE TABLE

LINE 115 V. 60 CYCLE

TUBE	POSITION	FIL. V.	GRID V.	PLATE V.	S.G. VOLTS
224	1st. R.F.	2.3	3-9	160-185	85-125
224	2nd. R.F.	2.3	3-9	160-185	85-125
224	DET.	2.3	48-8	75-115	85-125
PZ	POWER	2.4	16	230	240
280	RECTIFIER	4.9		400	

REMLER

MODEL 11

REMLER COMPANY, Ltd.

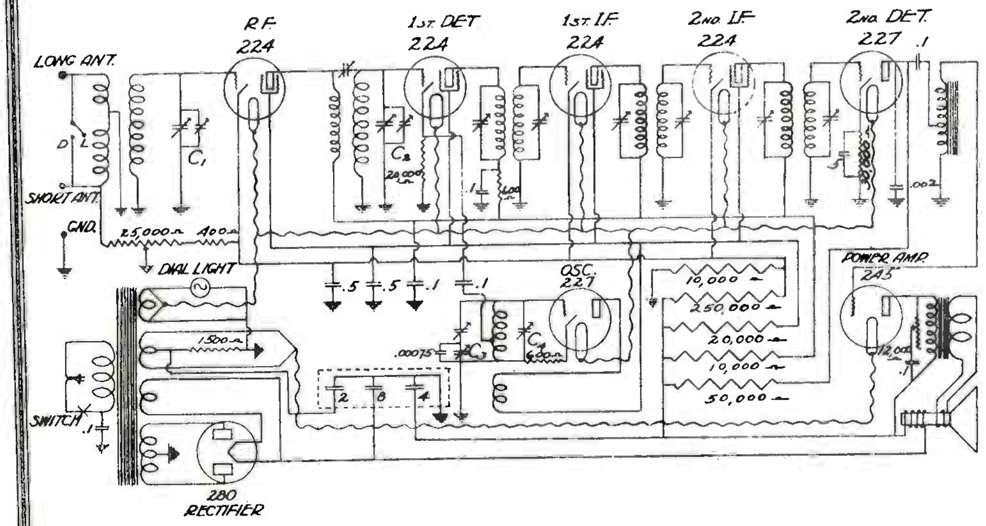

WIRE COLOR CODE

RED - FIL. RECT. - KATHODE I.F. & R.F. - +B 1st. DET. - +B POWER AMP. - +B OSCILLATOR - SPEAKER FLD. - ANTENNA

BLUE - FIL. POWER TUBE - PLATE RF - PLATE OSC. - PLATE 2nd DET.

GREEN - GRID POWER AMPLIFIER

BROWN - FIL. R.F. - FIL. I.F. TUBES - FIL. DETECTORS

BLACK - KATHODE 2nd. DET. - PLATE POWER AMPLIFIER - GROUND - VOICE COIL

YELLOW - SHIELD GRID - PLATE RECTIFIER - +B I.F.

VOLTAGE TABLE

LINE 120 V. 60 CYCLE

TUBE	POSITION	FIL. V.	GRID V.	PLATE V.	S.G. VOLTS
224	R.F.	2.4-2.5	3-11	200-275	80-100
224	1st. DET.	2.4-2.5	6-10	200-275	80-100
224	1st. I.F.	2.4-2.5	3-11	200-275	80-100
224	2nd. I.F.	2.4-2.5	3-11	200-275	80-100
227	2nd. DET.	2.4-2.5	25-30	180-200	
227	OSC.	2.4-2.5	3-4	80-100	
245	POWER TUBE	2.4	40-50	205-220	
280	RECTIFIER	4.9		380	

REMLER

MODEL 17

SUPER-HETERODYNE

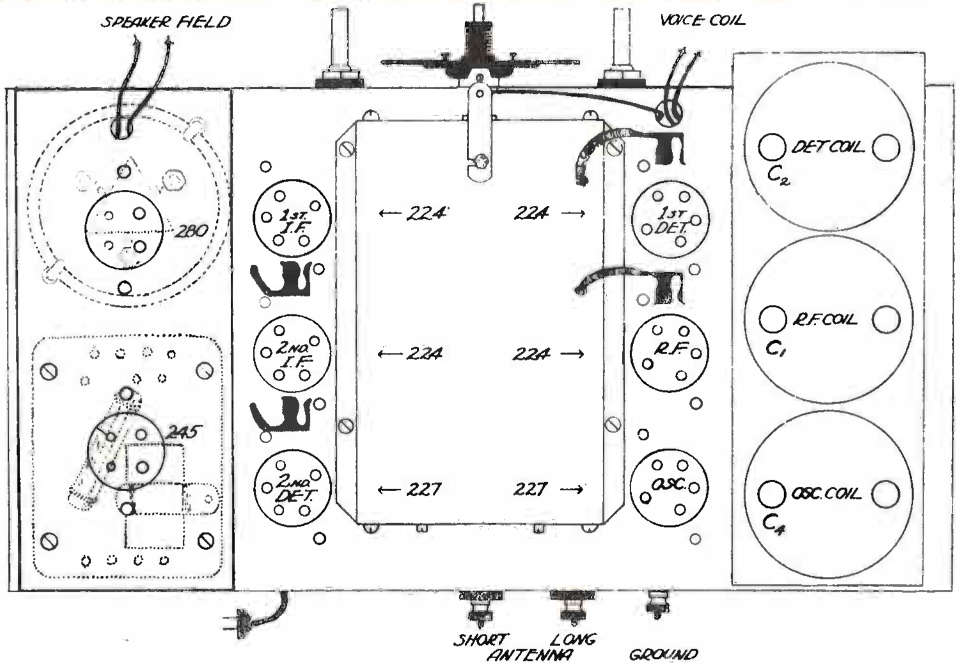

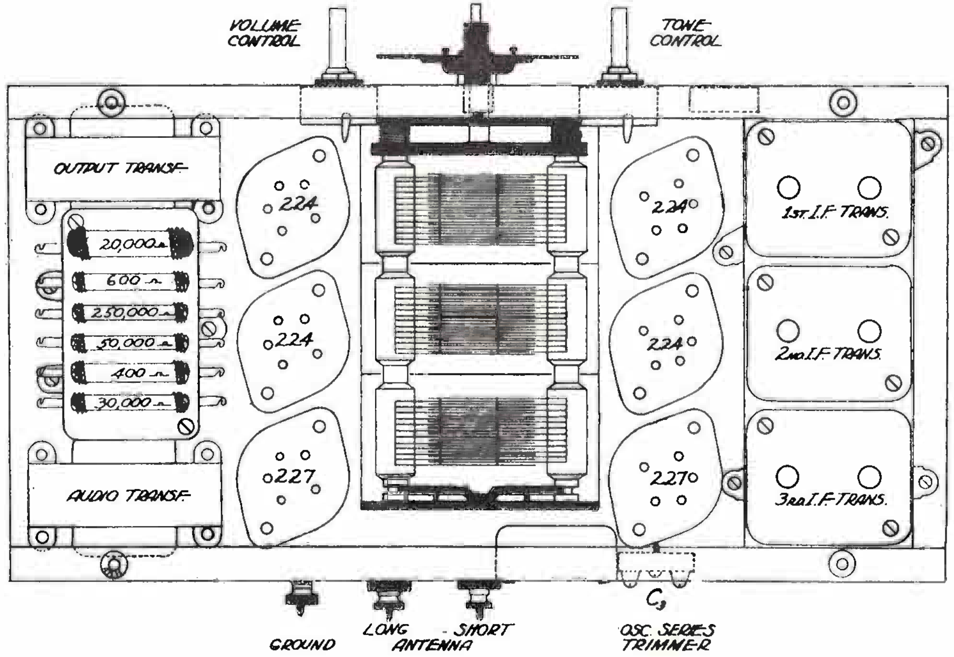

SEARS, ROEBUCK & CO.

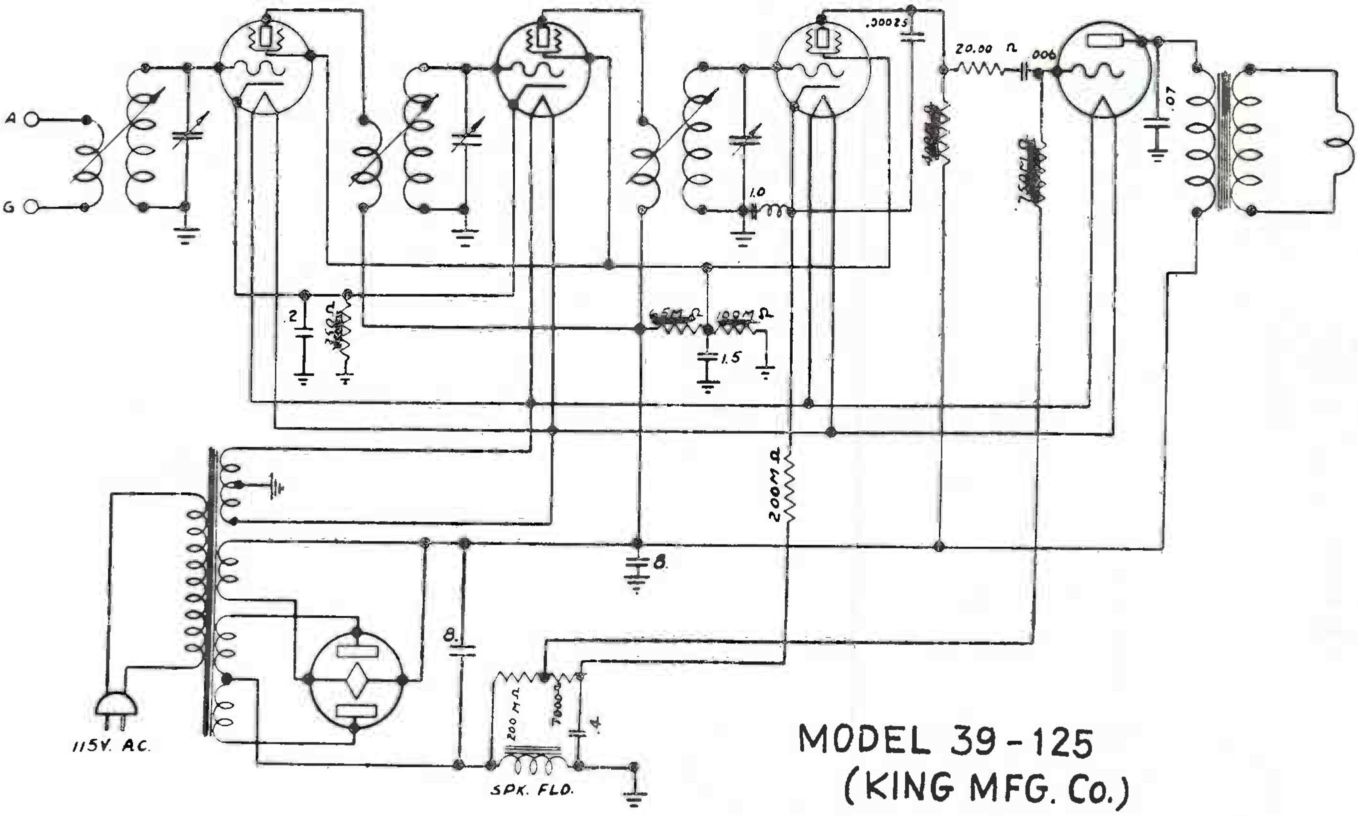

MODEL 39-125
(KING MFG. Co.)

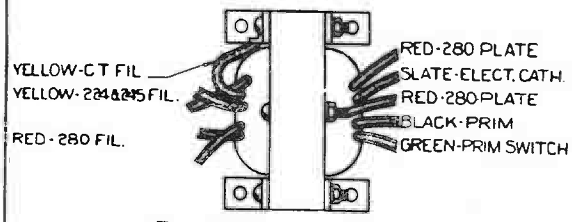

Power Transformer
R5567A - 60~
R5574A - 25~

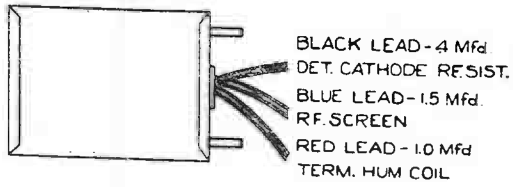

Filter Condenser
R5575 - 60 CYCLE
25 CYCLE

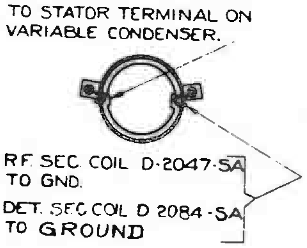

Secondary Coil
DET SEC COIL - D-2084-SA (YELLOW SPOT)
RF SEC COIL - D-2047-SA (PLAIN)

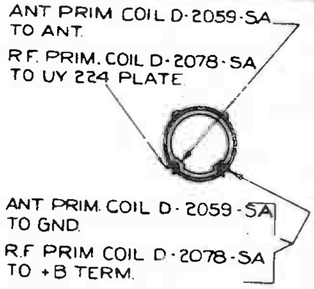

Primary Coil
ANT. PRIM COIL - D-2059-SA (YELLOW SPOT)
R.F. PRIM COIL - D-2078-SA (PLAIN)

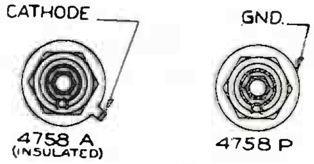

Electrolytic Condensers

LEAD DETAILS OF POWER TRANSFORMER, FILTER & ELECTROLYTIC CONDENSERS, PRIMARY & SECONDARY R.F. COILS.

SEARS, ROEBUCK & CO.

MODEL 39-125

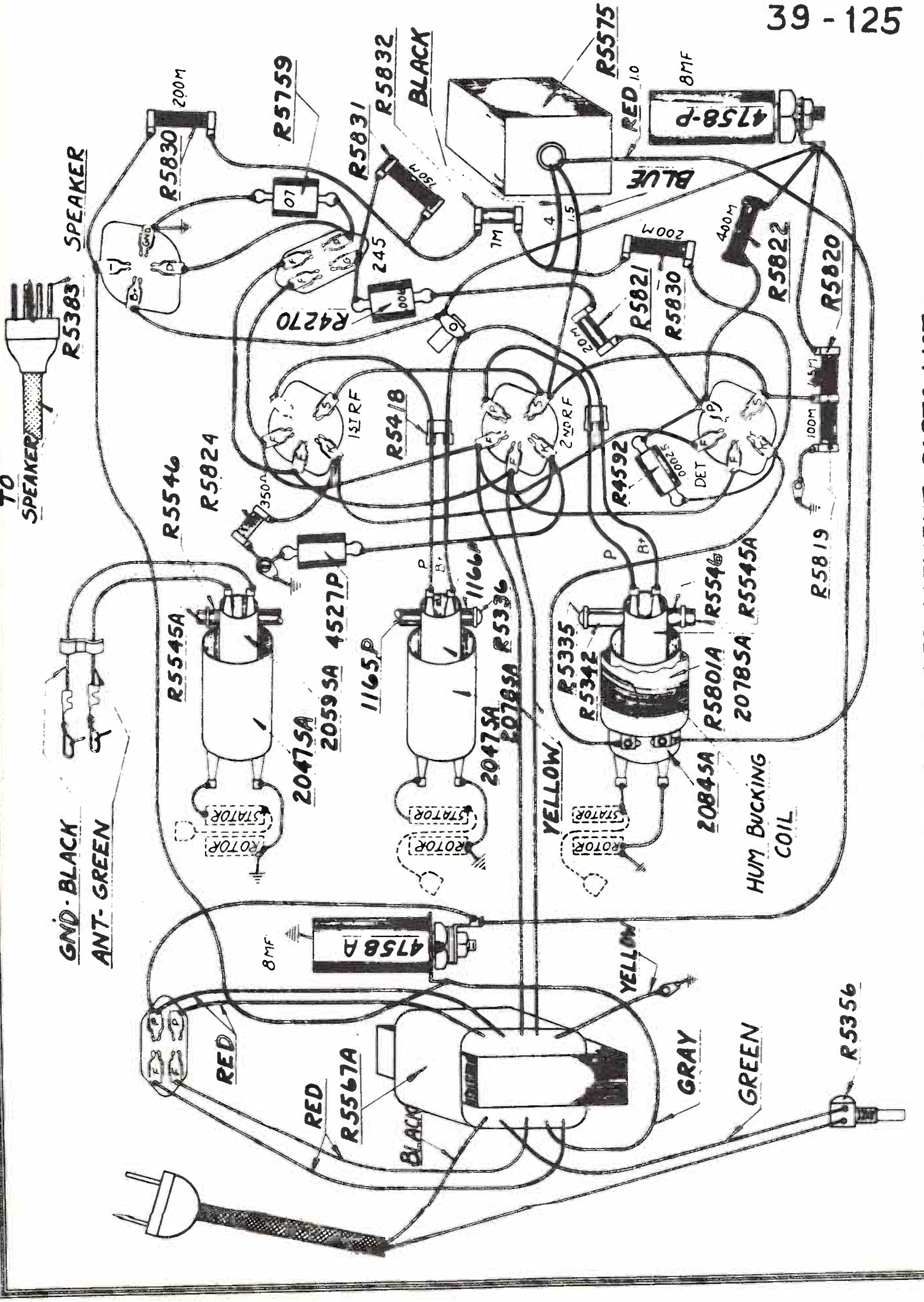

- ACTUAL WIRING DIAGRAM AND REPLACEMENT PARTS LIST -

SEARS, ROEBUCK & CO.

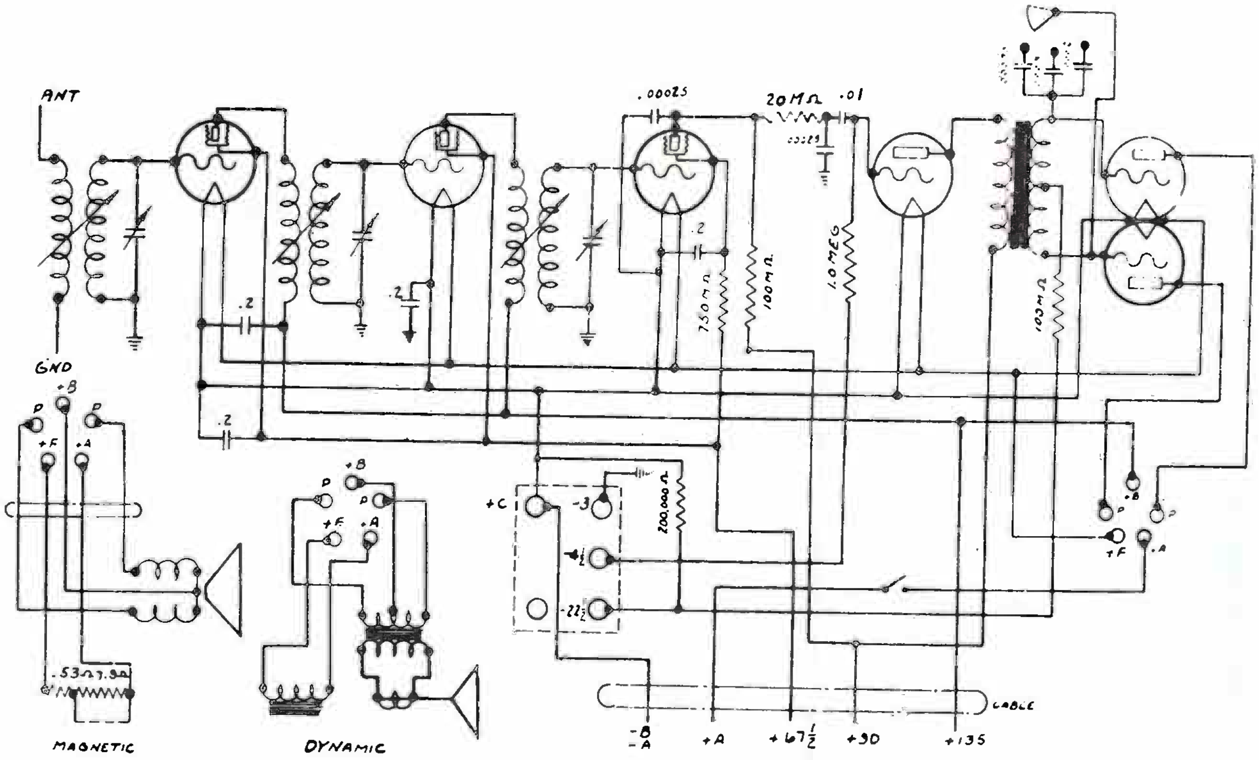

MODEL 40-43

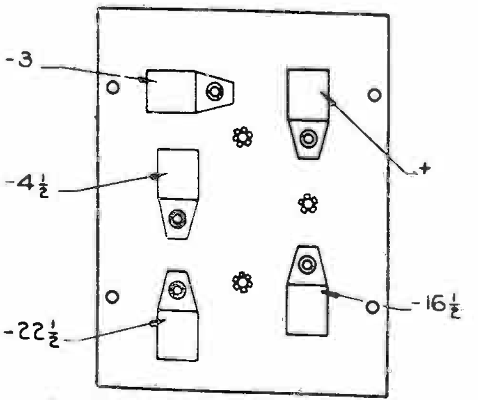

'C' Battery Terminal Board
R-5703-A

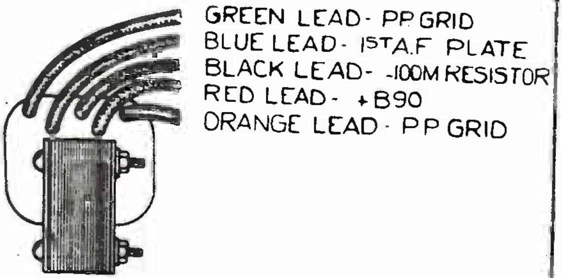

A.F. Input Transformer
R-5916-A Mod. 40
R-5937-A Mod 43

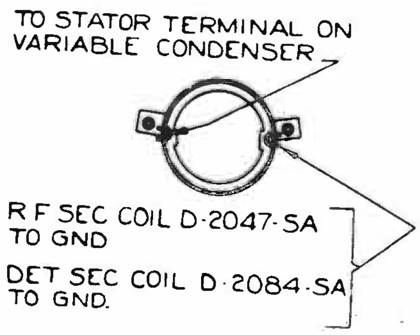

Secondary Coil
DET SEC COIL = D-2084-SA (YELLOW SPOT)
R.F SEC COIL = D-2047-SA (PLAIN)

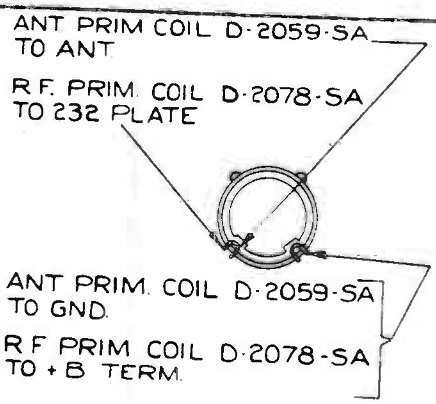

Primary Coil
ANT PRIM COIL = D-2059-SA (YELLOW SPOT)
R.F PRIM COIL = D-2078-SA (PLAIN).

LEAD DETAILS OF A.F INPUT TRANSFORMER, PRIMARY & SECONDARY R.F. COILS & 'C' BATTERY TERMINAL BOARD

SEARS, ROEBUCK & CO.

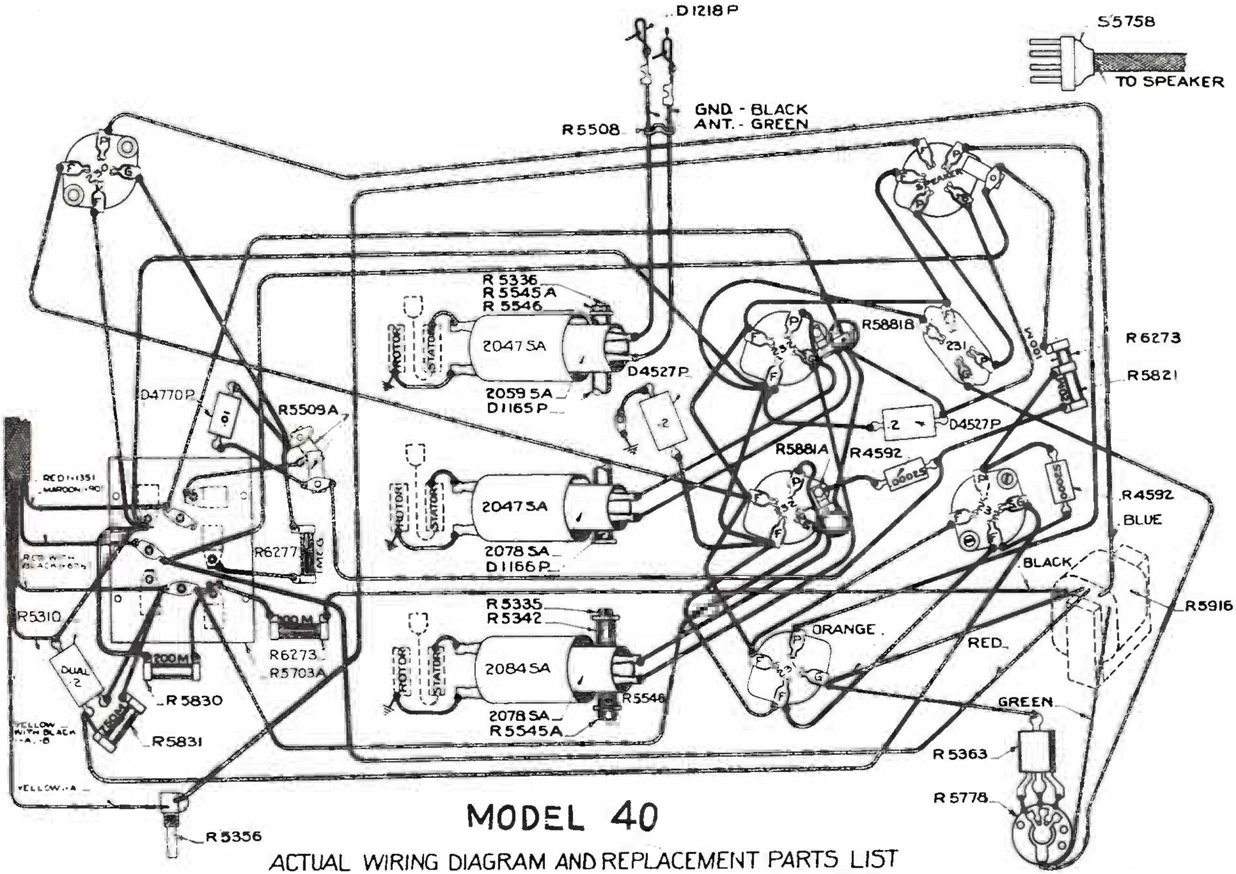

MODEL 40

ACTUAL WIRING DIAGRAM AND REPLACEMENT PARTS LIST

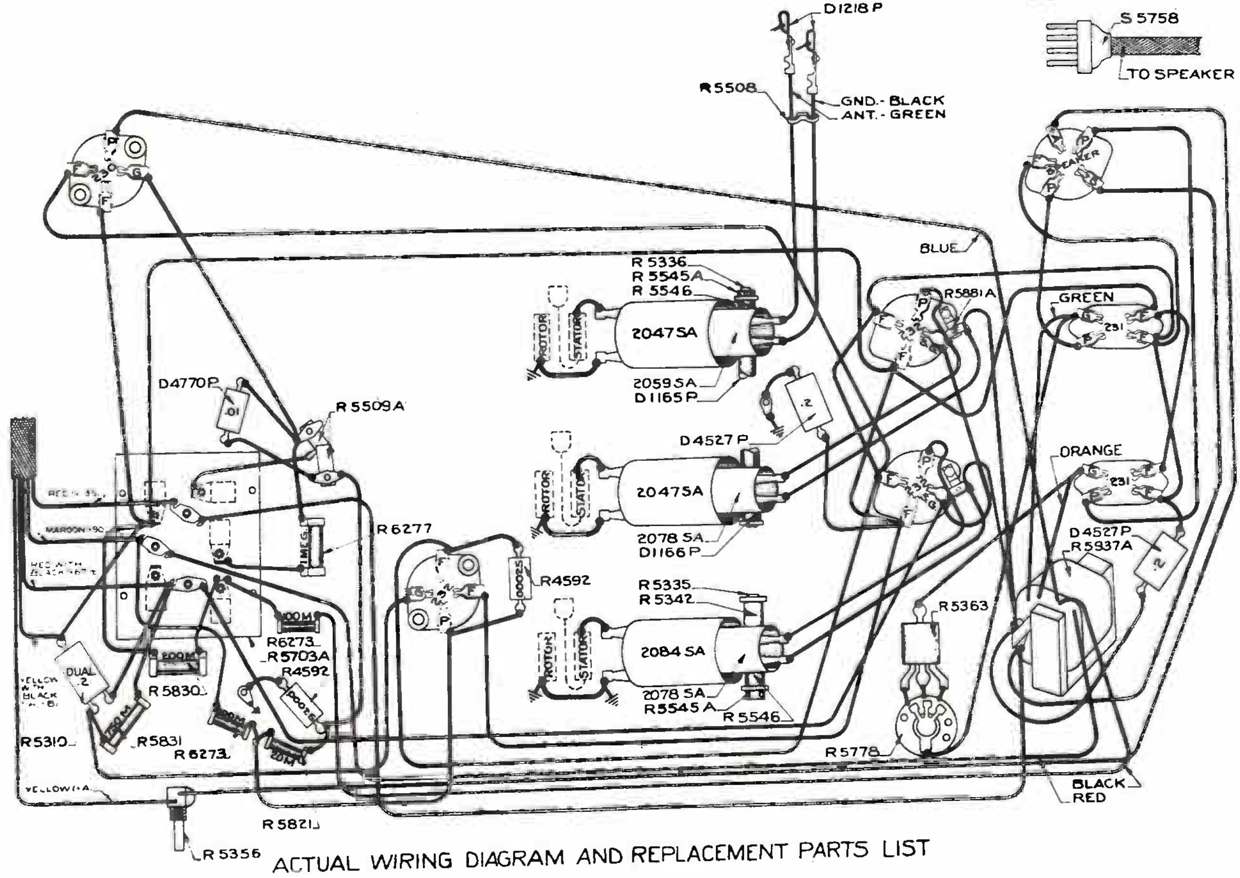

ACTUAL WIRING DIAGRAM AND REPLACEMENT PARTS LIST

SEARS, ROEBUCK & CO.

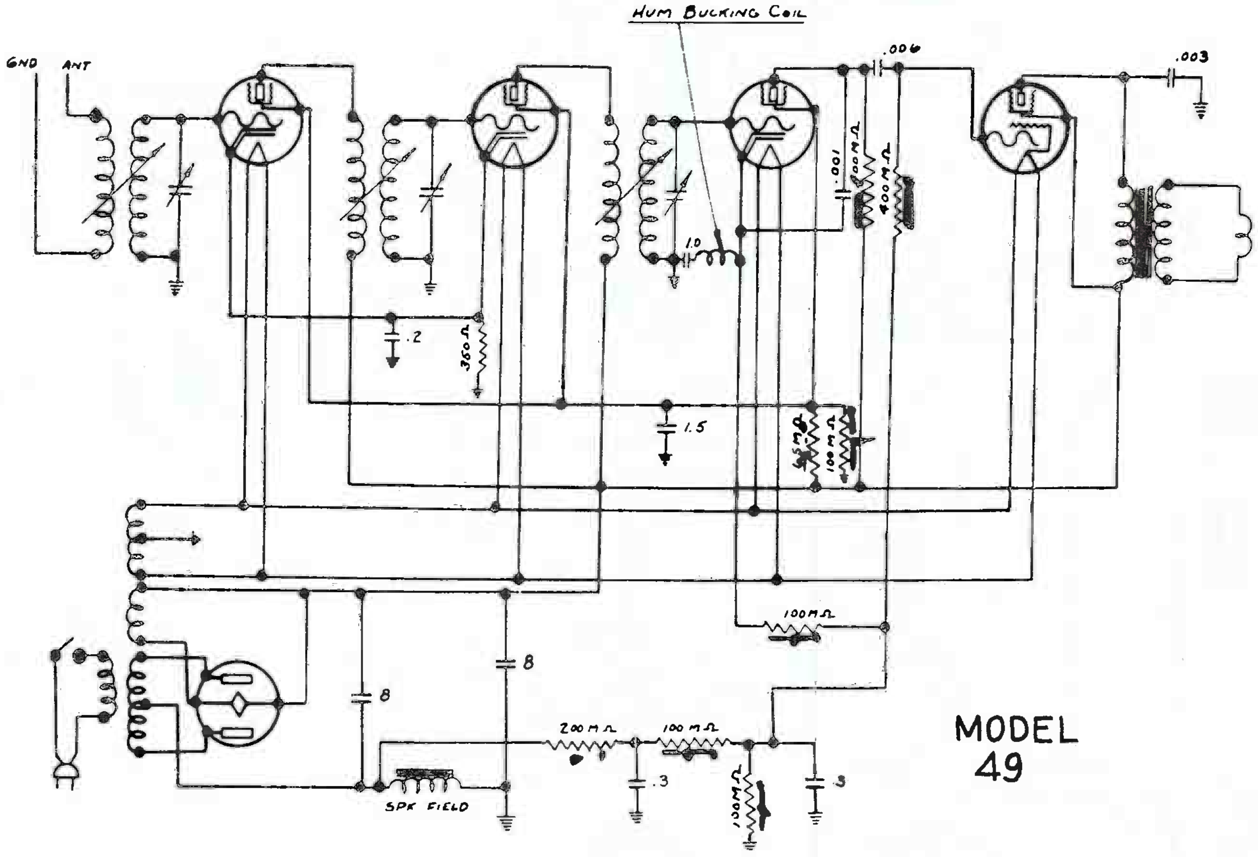

MODEL 49

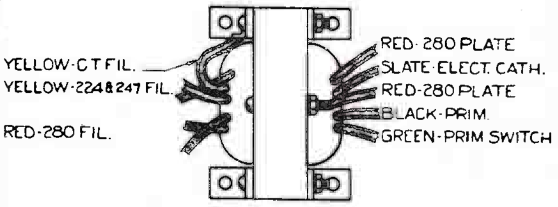

POWER TRANSFORMER
R 5567A : 60~
R 5574A : 25~

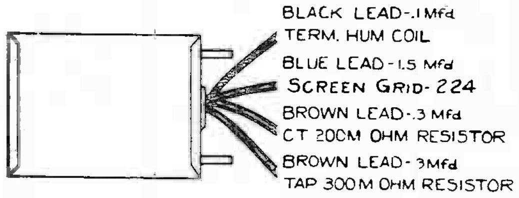

FILTER CONDENSER
R-6101 : 60 CYCLE
25 CYCLE

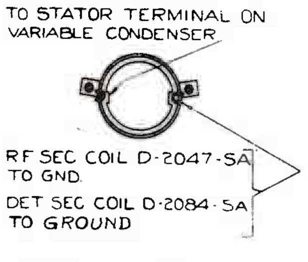

SECONDARY COIL
DET SEC. COIL = D-2084-SA (YELLOW SPOT)
RF SEC COIL : D-2047-SA (PLAIN)

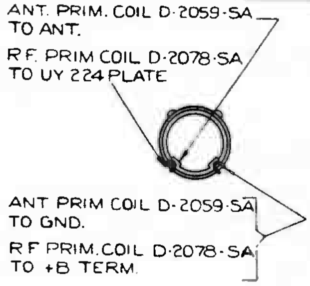

PRIMARY COIL
ANT PRIM. COIL = D-2059-SA (YELLOW SPOT)
RF PRIM. COIL = D-2078-SA (PLAIN)

MODEL 49

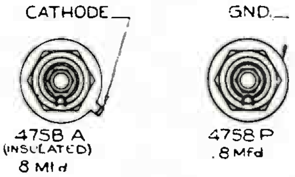

ELECTROLYTIC CONDENSERS

LEAD DETAILS OF POWER TRANSFORMER, FILTER & ELECTROLYTIC CONDENSERS, PRIMARY & SECONDARY R F COILS.

SEARS, ROEBUCK & CO.

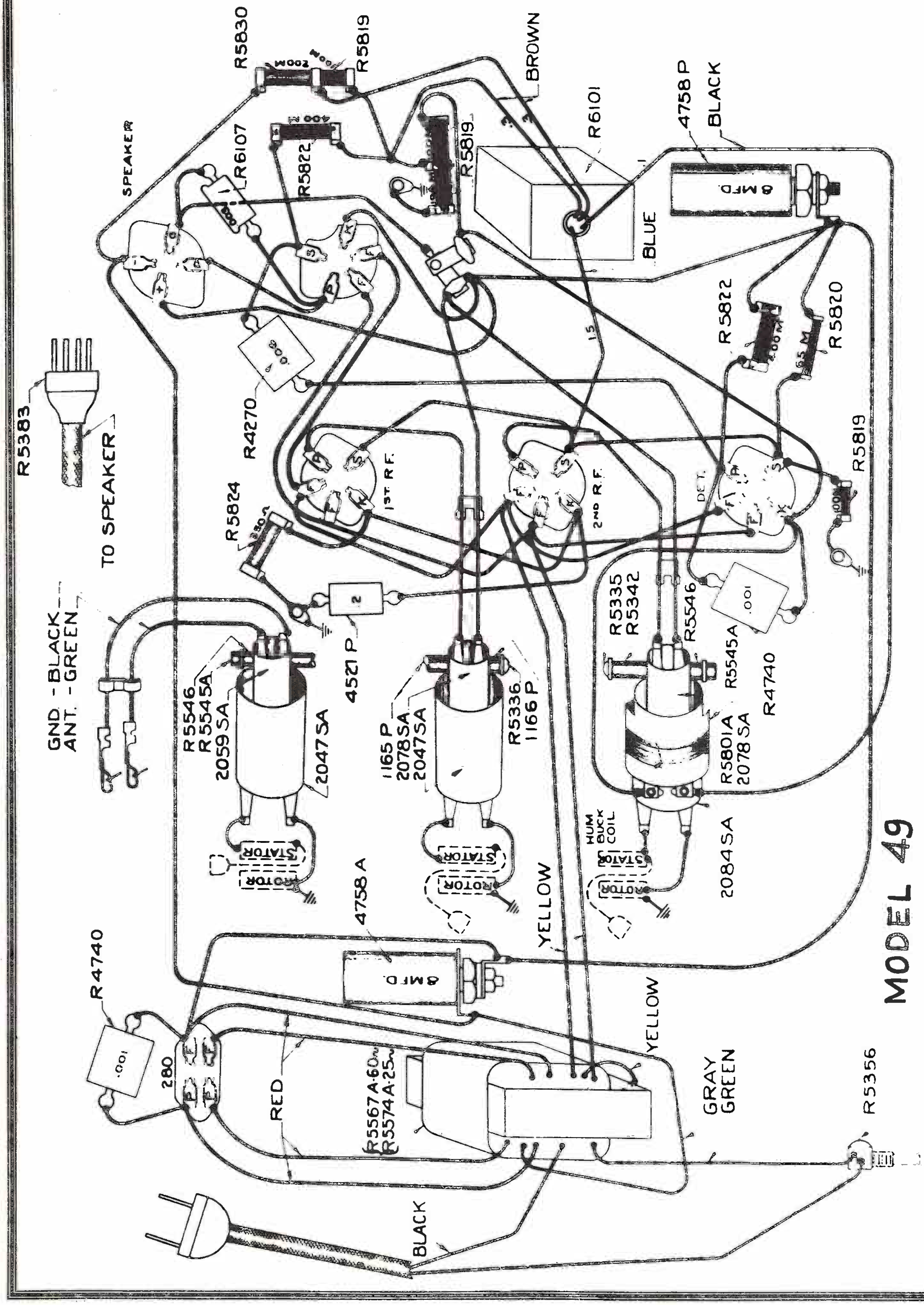

MODEL 49

ACTUAL WIRING DIAGRAM & REPLACEMENT PARTS LIST

SEARS, ROEBUCK & CO.

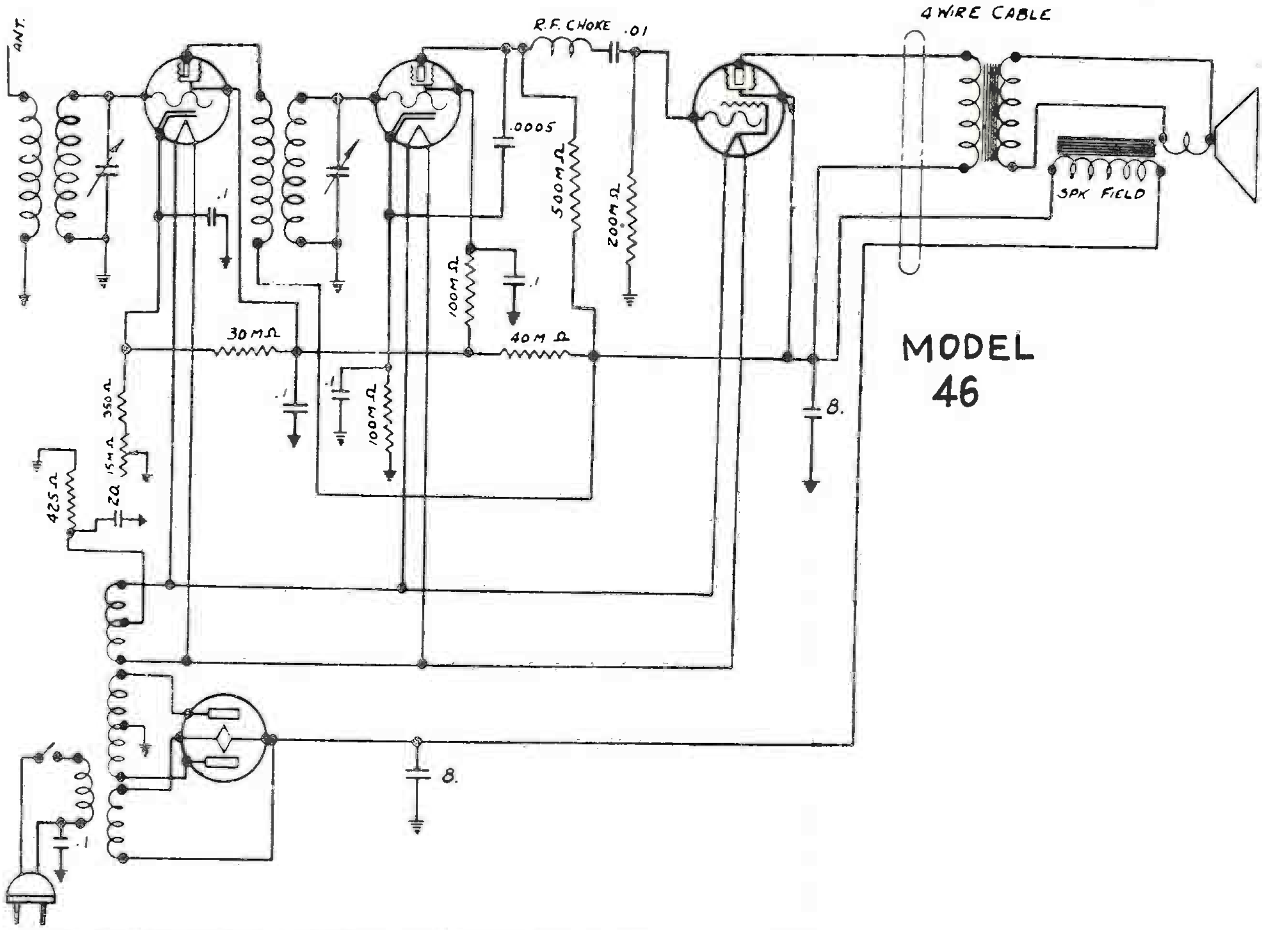

MODEL 46

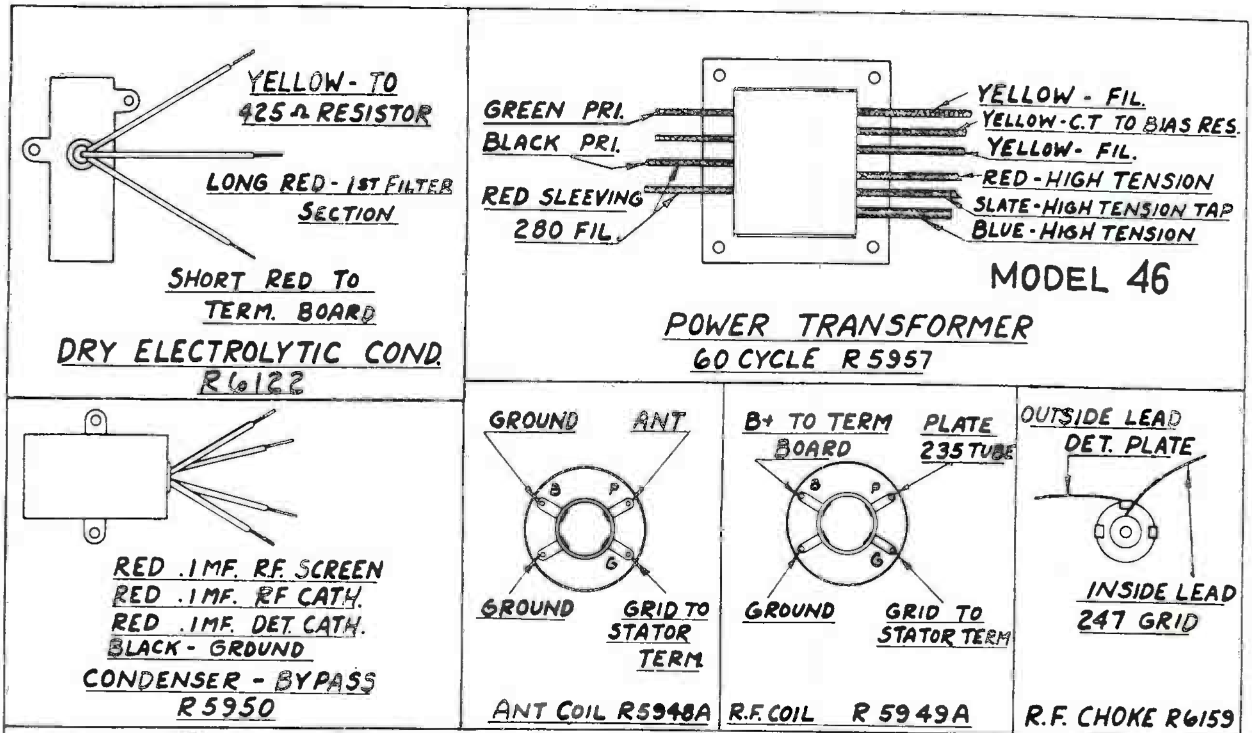

DRY ELECTROLYTIC COND. R6122

POWER TRANSFORMER 60 CYCLE R 5957

CONDENSER - BYPASS R5950

ANT COIL R5948A

R.F. COIL R 5949A

R.F. CHOKE R6159

LEAD DETAILS OF POWER TRANSFORMER - BYPASS & DRY ELECTROLYTIC CONDENSERS ANTENNA - R.F. & R.F. CHOKE COILS.

SEARS, ROEBUCK & CO.

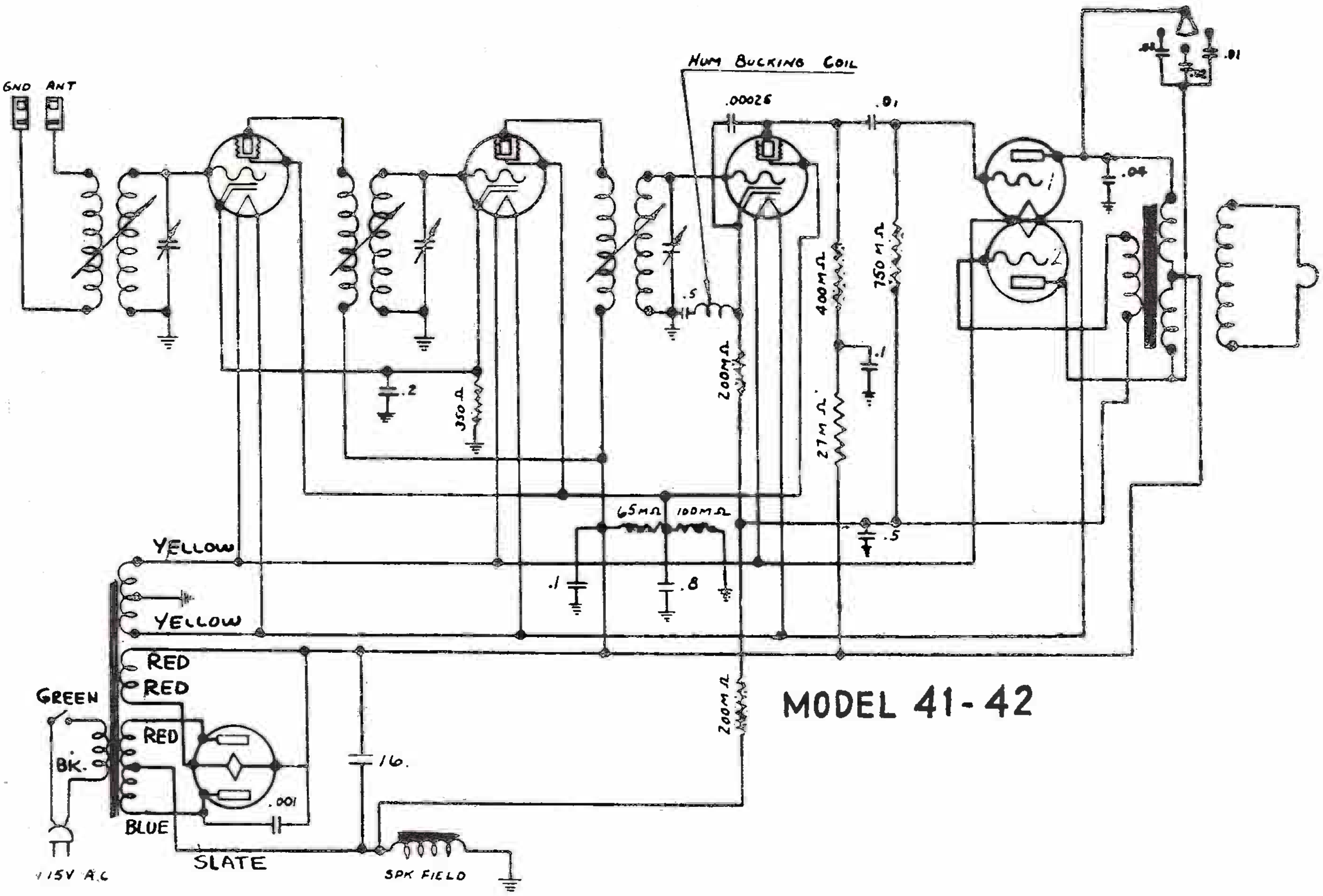

MODEL 41-42

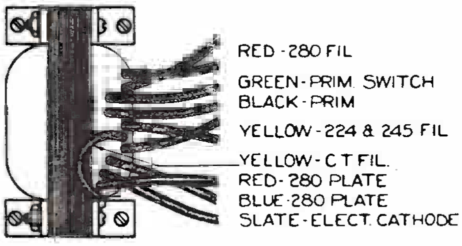

MODEL 42

Power Transformer
R 5779 A = 60 ~
R 5826 A = 25 ~

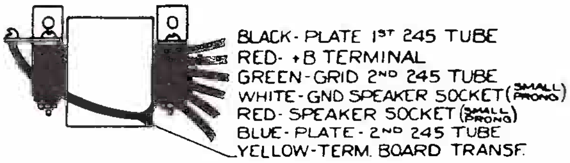

Audio. Input - Output Transformer
R 5784 B

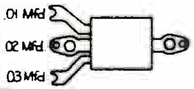

Tone Control Condenser
R 5777

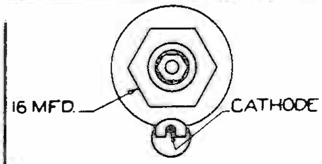

Electrolytic Condenser
R 5734 A

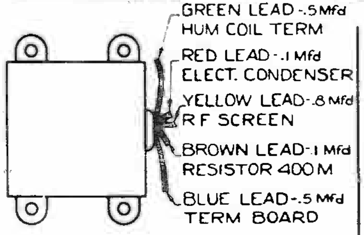

Filter Condenser
R 5794 - 60 CYCLE
25 CYCLE

Secondary Coil
DET SEC COIL = D-2084-SA (YELLOW SPOT)
R F SEC COIL = D-2047-SA (PLAIN)

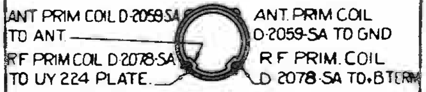

Primary Coil
ANT PRIM. COIL = D-2059-SA (YELLOW SPOT)
R F PRIM COIL = D-2078-SA (PLAIN)

LEAD DETAILS OF POWER & AUDIO TRANSFORMER, FILTER, TONE CONTROL & ELECTROLYTIC CONDENSERS, PRIMARY & SECONDARY R F COILS.

SEARS, ROEBUCK & CO.

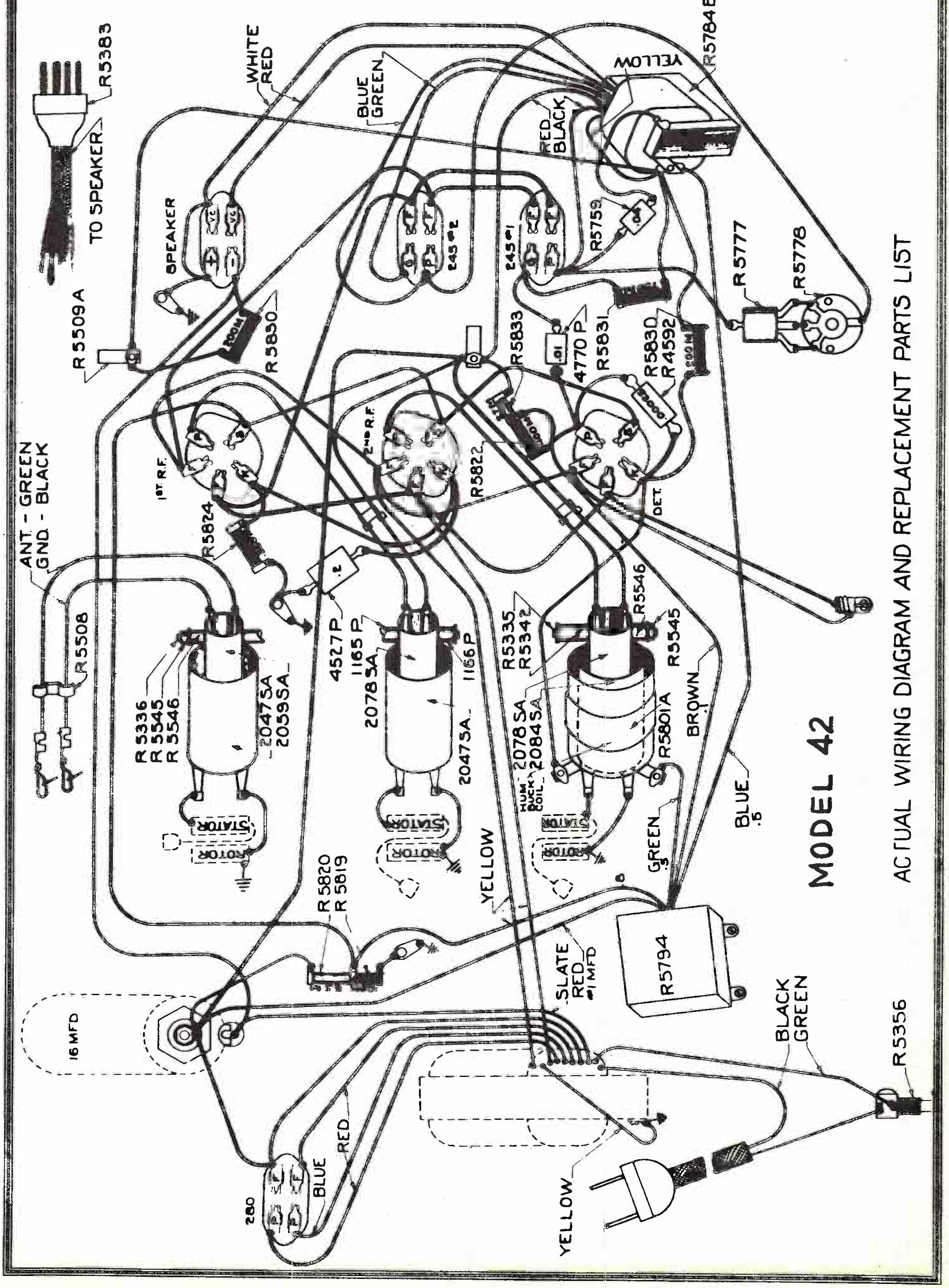

MODEL 42

ACTUAL WIRING DIAGRAM AND REPLACEMENT PARTS LIST

EVEREADY RAYTHEON RADIO TUBE CHART

ISSUED APRIL 1932

DC DETECTOR AND AMPLIFIER TUBES

TYPE	USE	BASE PRONGS	MAX. DIMEN. OVERALL		FILAMENT SUPPLY	FILAMENT VOLTAGE	FIL. CUR. AMPERES	SC. GR. VOLTAGE	WHEN USED AS	PLATE SUPPLY VOLTAGE	GRID BIAS VOLTAGE	PLATE CURRENT MA.	AMPLIF. FACTOR	PLATE RESIS. OHMS	MUTUAL CONDUCT. MICROMHOS	MAX UNDIST. OUTPUT MILLIWATTS	OPTIMUM LOAD RES. OHMS
			HEIGHT	DIAM.													
ERV-199	DETECTOR	SHORT 4	3½	1 1/16	DRYCELL-4½V	3.3	0.063		DETECTOR	45	+A	1.5	6.6	17000	370		
ERX-199	AMPLIFIER	LONG 4	4⅛	1 3/16	STORAGE 4V				AMPLIFIER	90	4.5	2.5		15500	425	7	15500
ER-120	POWER AMPLIFIER	4	4⅛	1 3/16	DRYCELL 4½V STORAGE 4V	3.3	0.132			90	16.5	3	3.3	8000	415	45	9600
										135	22.5	6.5		6300	525	110	6500
ER-200A	DETECTOR	4	4 11/16	1 13/16	STORAGE 6V	5	0.25			45	−A	1.5	20	30000	670		
ER-201A	DETECTOR AMPLIFIER	4	4 11/16	1 13/16	STORAGE 6V	5	0.25		DETECTOR	45	+A	1.8	8	12000	670		
									AMPLIFIER	90	4.5	2.5		11000	725	15	11000
										135	9	3		10 000	800	55	20000
ER-240	DETECTOR	4	4 11/16	1 13/16	STORAGE 6V	5	0.25		DETECTOR ¼ MEG. COUP. RESIS.	180	+A	0.5	30	90000	330		
	AMPLIFIER								R.F. AMPLIFIER	135	1.5	0.6		65000	450		
									AUD. AMPL. ¼ MEG. COUP. RES.		3	0.2		150000	200		
ER-222	AMPIFIER	4	5¼	1 13/16	DRY CELL 4½V STORAGE 4-6V	3.3	0.132	67.5	R.F. AMPLIFIER	135	1.5	3.3	290	600000	480		
								22.5	AUDIO AMPLIFIER ¼ MEG. COUP. RESIS.	180		0.3	350	2000000	175		
ER-112A	DETECTOR AMPLIFIER	4	4 11/16	1 13/16	STORAGE 6V	5	0.25		DETECTOR	45	+A	4	8	6100	1300		
	POWER AMPLIFIER				STORAGE 6V OR AC				AMPLIFIER OR POWER AMPLIFIER	90	DC 4.5 AC	5.2	8.5	5600	1500	30	5600
										135	9 11.5	6.2		5300	1600	115	8700
										180	13.5 16	7.6		5000	1700	260	10800
ER-171A	POWER AMPLIFIER	4	4 11/16	1 13/16	STORAGE 6V OR AC	5	0.25			90	16.5 19	12	3	2250	1330	125	3200
										135	27 29.5	17.5		1960	1520	370	3500
										180	40.5 43	20		1850	1620	700	5350
ER-230	DETECTOR AMPLIFIER	4	4¼	1 9/16	AIRCELL 2V STORAGE 2V	2	0.060		DETECTOR GRID LEAK	45	+A	1.5	9.3	14000	660		
									BIAS	135	12.5						
									AMPLIFIER	90	4.5	1.8	9.3	13000	700	16	15000
										135	9	2.2		12000	775	55	20000
ER-231	POWER AMPLIFIER	4	4¼	1 9/16	AIRCELL 2V STORAGE 2V	2	0.130			135	22.5	6.8	3.8	4950	760	150	9000
ER-232	DETECTOR AMPLIFIER	4	5¼	1 13/16	AIRCELL 2V STORAGE 2V	2	0.060	67.5	DETECT. ¼ MEG. COUP. RESIS.	135	6						
									AMPLIFIER		3	1.4	580	1150 000	505		
ER-234	DETECTOR AMPLIFIER	4	5¼	1 13/16	AIRCELL 2V STORAGE 2V	2	0.060	67.5	1st. DETECTOR	90 TO 180	8						
									AMPLIFIER	135	3	2.8	360	600 000	600		
										180		2.8	620	1000000	620		
ER-233	POWER AMPLIFIER	5	4 11/16	1 13/16	AIRCELL 2V STORAGE 2V	2	0.260	100		100	8	10.5	60	50000	1200	300	7000
								135		135	13.5	14	70	50000	1350	650	7000
ER-236	DETECTOR AMPLIFIER	5	4 11/16	1 9/16	STORAGE 6V 110 DC LINE	6.3	0.30	67.5	DETECT. ¼ MEG. COUP. RESIS.	180	6						
								55	AMPLIFIER	90	1.5	1.8	170	200000	850		
								90		180	3.0	3.1	370	350000	1050		
ER-237	DETECTOR AMPIFIER	5	4¼	1 9/16	STORAGE 6V 110V DC LINE	6.3	0.30		BIAS DETECTOR	180	21						
									AMPLIFIER	90	6	2.7	9	11500	780	30	17500
										180	13.5	4.7		10000	900	175	20000
ER-239	DETECTOR AMPLIFIER	5	4 11/16	1 9/16	STORAGE 6V 110V DC LINE	6.3	0.30	90	1st DETECTOR	90 TO 180	10						
									AMPLIFIER	90	3	4.4	360	375 000	960		
										180		4.5	750	750000	1000		
ER-238	POWER AMPLIFIER	5	4 11/16	1 9/16	STORAGE 6V 110V DC LINE	6.3	0.30	100		100	9	7.0	80	85000	950	200	8500
								135		135	13.5	9.5	100	100 000	1000	525	13500
								165		165	17	12	100	80000	1200	850	13500
LA	OUTPUT AMPLIFIER	5	4 11/16	1 13/16	STORAGE 6V	6.3	0.30	135		135	9	12	100	53000	1900	700	9500
								165		165	11	17		48000	2100	1200	8000

AC DETECTOR AND AMPLIFIER TUBES

ER-226	AMPLIFIER	4	4 11/16	1 13/16	AC	1.5	1.05			90	6	3.8	8.2	8600	955	30	9800
										135	9	6.3		7200	1135	80	8800
										180	13.5	7.4		7000	1170	180	10500
ER-227	DETECTOR AMPLIFIER	5	4 11/16	1 13/16	AC	2.5	1.75		DETECTOR GRID LEAK	45	0	3.5	10	9000	1100		
									DETECTOR BIAS	250	30						
									AMPLIFIER	135	9	4.5	9	9000	1000	80	13000
										180	13.5	5		9000	1000	165	18700
ER-224A	DETECTOR AMPLIFIER	5	5 1/4	1 13/16	AC	2.5	1.75	45	1/4 MEG. COUP. RES. DETECTOR	180	4						
									1/4 MEG. COUP. RES. AMPLIFIER		3	0.3	300	600000	500		
								90	AMPLIFIER	180	3	4	400	400000	1000		
										250			615	600000	1025		
ER-235 ER-551	DETECTOR AMPLIFIER	5	5 1/4	1 13/16	AC	2.5	1.75	90	1st. DETECTOR	250	8						
									AMPLIFIER	180	3	6.3	255	250000	1020		
										250		6.5	370	350000	1050		
ER-56	DETECTOR AMPLIFIER	5	4 1/4	1 9/16	AC	2.5	1.0		BIAS DETECTOR	250	20						
									AMPLIFIER	180	8.5	5	13.8	9500	1450		
										250	13.5			9500	1450		
ER-57	DETECTOR AMPLIFIER	6	4 11/16	1 9/16	AC	2.5	1.0	100	DETECTOR 1/4 MEG. COUP. RES.	250	6						
									AMPLIFIER	180	3	1.8	2000	1600 000	1225		
										250		2.0	2500	2000000	1225		
ER-58	DETECTOR AMPLIFIER	6	4 11/16	1 9/16	AC	2.5	1.0	100	1st. DETECTOR	250	12						
									AMPLIFIER	180	3	7.5	1000	600 000	1600		
										250		8.0	1300	800000	1600		
ER-245	POWER AMPLIFIER	4	5 5/8	.2 3/16	AC	2.5	1.50			180	34.5	27	3.5	1900	1850	780	3500
										275	56	36		1670	2100	2000	4600
ER-46	POWER AMPLIFIER	5	5 5/8	2 3/16	AC	2.5	1.50		CLASS A	250	33	22	5.6	2400	2350	1250	6400
									CLASS B (2TUBES)	300	0	8 TO 120				16000	6000 MIN.
										400		12 TO 135				20000	6000 MIN.
ER-247	POWER AMPLIFIER	5	5 5/8	2 3/16	AC	2.5	1.50	250		250	16.5	31	150	60000	2500	2500	7000
ER-210	POWER AMPLIFIER	4	5 5/8	2 3/16	AC	7.5	1.25			250	22	10	8	6000	1330	400	13000
										350	31	16		5150	1550	900	11000
										425	39	18		5000	1600	1600	10000
ER-250	POWER AMPLIFIER	4	6 1/4	2 11/16	AC	7.5	1.25			250	45	28	3.8	2100	1800	1000	4300
										350	63	45		1900	2000	2400	4100
										450	84	55		1800	2100	4600	4350

RECTIFIER TUBES

								MAX. AC VOLTS PER ANODE	MAX. DC OUTPUT CURRENT (AMPERES)	MAX. PEAK PLATE CURRENT	MIN. CHOKE BEFORE FILTER CONDENSER	MAX. DC VOLTS DELIVERED TO FILTER (NOMINAL)
BH	FULL WAVE RECTIFIER	4	4 5/8	1 13/16	GAS TYPE - NO FILAMENT			350	0.125			300
BA	FULL WAVE RECTIFIER	4	5 5/8	2 7/16	GAS TYPE - NO FILAMENT			350	0.350			300
BR	HALF WAVE RECTIFIER	4	4 11/16	1 13/16	GAS TYPE - NO FILAMENT			600V PEAK INVERSE	0.050			200
ER-280	FULL WAVE RECTIFIER	4	5 5/8	2 3/16	AC	5.0	2.0	350	0.125			300
								400	0.110			370
								550	0.135		20 HENRIES	425
ER-281	HALF WAVE RECTIFIER	4	6 1/4	2 7/16	AC	7.5	1.25	700	0.085			700
ER-82	FULL WAVE RECTIFIER	4	4 11/16	1 13/16	AC	2.5	3.0	500	0.125	0.400		425

RADIO-CRAFT'S CHART OF INTERMEDIATE FREQUENCIES

● MANY SERVICE MEN are laboring under the erroneous impression that 175 kc. is the "standard" intermediate frequency used in present-day broadcast superheterodynes. So much publicity was given this particular frequency when the "super" returned to popular favor two seasons ago that they overlooked completely the great amount of development work done since that time. More than one repair man has vainly tried to line up supers at 175 kc. when the actual working frequency was either higher or lower!

For the benefit of Service Men, we circularized all domestic radio manufacturers known to be in business, asking them simply for the I. F. used in all supers that they now make or ever made. This list which follows represents the total response to date. If further "dope" is received, we will publish a similar list in the near future.

ALL-AMERICAN MOHAWK CORP.

Lyric models S-6, S-7, S-8, S-10, S-63, S-65, DC-65, B-80, S-80, SA-90, SA-130 ....175 kc.
Lyric models SW-8, SW-80 ....484 kc.

ATWATER KENT MFG. CO.

Model 91 Auto Radio..260 kc.
All other models........130 kc.

AUDIOLA RADIO CO.

All models..........177.5 kc.

BALKEIT RADIO CO.

Models L7, 55, 85......175 kc.

BELMONT RADIO CORP.

5 tube models 51B, 51C and 55B; 7 tube models 71 and 71A; 8 tube model 81; 11 tube models 110 and 110A ....175 kc.

BROWNING DRAKE RADIO CORP.

Models 40 and 80......175 kc.

CANADIAN WESTINGHOUSE CO., LTD.

Models 89, 90, 99, 99A, 110, 120......171 kc.
Columaires 8 and 10, and models 101, 801, 802........178 kc.

COLONIAL RADIO CORP.

All models ....175 kc.

COLUMBIA PHONOGRAPH CO., INC.

C-25B chassis in C-256 receiver, C-55 chassis in C-53, C-54, C-59 receivers, C-80A chassis in C-81, C-83 receivers, C-80B chassis in C-84 receiver, C-90A chassis in C-93 receiver, C-90B chassis in C-94 receiver, C-120B chassis in C-123 receiver (battery), C-220 chassis in C-223 receiver, C-550 chassis in C-559 receiver, C-800A chassis in C-85 receiver; all........175 kc.

CROSLEY RADIO CORP.

Models 95, 96, 129, 130, 132-1, 133, 134, 135, 137, 141 ....181.5 kc.
Models 120, 121, 122, 123, 124, 125, 126, 127, 128, 131 .... 175 kc.
Model 136-1 .... 456 kc.

DE FOREST CROSLEY RADIO (A Division of Consolidated Industries, Ltd.)

1931 Models: all Challenger models; Encore (500), Ballad (501), Carol (705A), Musicale (707A), Little Symphony (840), Rhapsody (850), Carillon (853), Clifton (405C), Canterbury (405A), Chesterfield (405B), Westminster (405D-E-F), Westminster Universal (607), Prelude (905), Belcanto (907), DX-Plus (855B), Herald (855); 1932 Models: Windsor (608A), Renwick (608C), York (851A), Mayfair (851C), Embassy (801), Battery Montrose (902), Balmoral (140); All ....175 kc.

DELCO APPLIANCE CORP.

32 volt D. C. Superheterodyne 110 volt A. C. Superheterodyne ....175 kc.

ECHOPHONE RADIO MFG. CO. LTD.

Models 62, 72, 92....115 kc.
S-5, S-5 Special, 5, 10, 15, 20, 35, 50, 55, 60, 65, 70, 75, 80, 90 ....175 kc.

EMERSON RADIO & PHONOGRAPH CORP.

Model AW-55 Six tube Superheterodyne ....445 kc.
Models CS-52, JS-53, KS-70, KS-80 ......175 kc.

FADA RADIO & ELECTRIC CORP.

KU 45, KW 48 and 49, KO 51, KOC 53 and 57, KX 61 and 63, KY 66, RE 73 and 85, RC 78 and 79, RA 74, 76, 83, 87, 88 and 89, RF 732 and 852; All ....175 kc.

(Note that besides the model number there are letter designations. These appear after the serial number of the receiver and they help designate the type chassis. For instance, a receiver bearing serial number 0000-RE will indicate that the chassis could be one from either a model 73 or a model 85.)

GENERAL ELECTRIC COMPANY

All models ....175 kc.

GRIGSBY-GRUNOW CO.

All models ....175 kc.

GULBRANSEN COMPANY

Models 130, 135, 235, 236, 237, 530, 535, 925, 3225, 3226, 3925, 8726..175 kc.
Models 3521, 3525, 3622 ....262 kc.

HAMMARLUND MFG. CO.

Comet All Wave Superheterodyne, Comet Pro, Models A and B........468 kc.

CHARLES HOODWIN CO.

6 tube Midget, 6 tube Auto set........175 kc.
All-Wave Chassis......456 kc.

HOWARD RADIO CO.

Letters indicate chassis model, numbers the corresponding cabinet models. H(35, 40), AVH (45, 60), O (20, 25, 30), AVO (35A), DL (500, 501), K (400), L (420), M, EX ....175 kc.

Automobile receivers ....260 kc.

KELLER-FULLER MFG. CO. LTD.

Los Angeles, Cal. Radiette Models 70, 80, 90, 120, and 50S ....175 kc.

COLIN B. KENNEDY CORP.

Models 52, 56, 62, 62A, 62B, 63, 64, 64B, 66, 66A, 66B 72 ....175 kc.

Model 52 (export)....135 kc.

Model 67 (export)....110 kc.

KOLSTER RADIO, INC.

Models K-55, 60, 62, 63, 65, 66, 70, 72, 73, 75, 76, 80, 82, 83, 85, 86, 90, 92, 93, 95, 96, 100, 102, 103, 105, 106, 110, 112, 113, 114, 115, 120, 122, 123, 125, 130, 132, 133, 135, 140, 142, 143, 145, 165, 195 ....all 175 kc.

LANG RADIO CORP.

Models MA7, MD7, SA7, SD7, MA8, MD8, SA8, SD8, SA9 ....175 kc.

C. R. LEUTZ, INC.

Special short-wave receiver ....450 kc.

LINCOLN RADIO CORP.

Deluxe SW-33, DC-SW10 ....480 kc.

PHILCO RADIO & TELEVISION CORP.

7 Philco Transitone..175 kc.

15 Series ....175 kc.

22, 23 Series............260 kc.

35 ....260 kc.

36 Series ....260 kc.

47 DC Series............260 kc.

51, 52 Series............175 kc.

70 and 70 with automatic volume control ....260 kc.

71 Series ....260 kc.

90 with 45's in output, and 90 with one '47 in output ....175 kc.

90 with two '47's in output ....260 kc.

91 Series....................260 kc.

111, 112 ....175 kc.

4 and 4C Series......3600 kc. adjusting frequency

PILOT RADIO & TUBE CORP.

Dragon, models 10 and 11 ....115 kc.

Models 39, 41............115 kc.

Models 148, 149........175 kc.

RCA-VICTOR CO., INC.

Radiolas 60, 62, 64, 66, and 67..............180 kc.

All other RCA, RCA-Victor and Victor Talking Machine receivers ....175 kc.

REMLER CO., LTD.

Model 10 ....260 kc.

Model 15 ....180 kc.

SILVER-MARSHALL, INC.

Models 36A, 41, 714, 716, 724, 724B, 726SW, 782-1040, A, B, C, D-E, F, G, J ....175 kc.

Models Q, QD, R-RT, V, X, Y..................465 kc.

SIMPLEX RADIO CO.

Models P, P-DC, P-Battery, T (automobile) ....175 kc.

SPARKS-WITHINGTON CO.

Models 10, 12, 14, 15, 16, 16AW, 18, 25, 26, 26AW, 27, 28, 30, 30A, 34, 35, 45 ....172.5 kc.

STROMBERG-CARLSON TELEPHONE MFG. CO.

Models 19, 20, 22, 24, 25, 26, 27, 29, 38, 39, 40, 41 ....175 kc.

TRANSFORMER COMPANY OF AMERICA

Models 80, 81, 83, 84, 85, 86, 90, 91, 94, 95, 96, 100, 101, 110, 111, 120, 121, 130, 131, 160, 170, 220, 230, 260, 270, 280, 290........175 kc.

Models 140, 150 (short wave combination): on short waves receiver is tuned to..................600 kc.

Model 125 ....100 kc.

Model 240 ....490 kc.

TRAV-LER RADIO & TELEVISION CORP.

Models S-9 and S-10..175 kc.

UNITED AMERICAN BOSCH CORP.

Model 260 ....517.5 kc.

All other models to date ....175 kc.

WELLS GARDNER, INC.

Series 052, 062, 072 ....262 kc.

Series 50, 022, 572, 092 ....175 kc.

ZENITH RADIO CORP.

Models AH, CH, RH, LH, WH, MH, BH..175 kc.

Models 090, 90, 91, 92, 103, 210, 220, 230, 240, 245, 410, 411, 420, 430, 440 ....175 kc.

Models 210-5, 211-5, 270-5 ....125 kc.

Models 250, 260, 272 ....175 and 1000 kc.

"FERROCART" R. F. COILS

DR. ALBERT NEUBURGER, Berlin

EUROPE, via the efforts of Hans Vogt, has recently become aware of the possibilities of the use of finely-divided iron as R.F. coil core material, à la the general idea disclosed in complete detail in the November, 1931, issue of RADIO-CRAFT, in the article, "Permeability Tuning."

The main advantages of this material, when used as the core of an R.F. transformer, are low resistance losses and high permeability. This latter factor manifests itself as a coil of much smaller dimensions than that ordinarily used, as pictorially represented in the photograph attached. The larger unit to the left is a coil having identical electrical characteristics—but note the difference in size!

Another distinct advantage is the fact that the material may be compressed by the application of heat and pressure; and it may be stamped, cut and sawed to almost any desired shape.

Selectivity curves of Ferrocart, in comparison with other coils having the same inductance, are distinctly steeper, indicating a lower R.F. resistance. At resonance, the response of a Ferrocart coil reaches 10 (arbitrary units). Under the same conditions, the usually efficient R.F. coil reaches 5.7, a ratio of 5.7/10 or .57. At 5 kc. off the measuring frequency, the Ferrocart coil as a response of 4.5 and the usual R.F. coil a response of 3.5. The ratio at this point is 3.5/4.5 or .77.

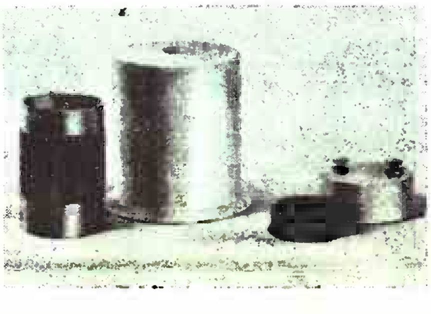

The above ratios mean that at resonance the usual R.F. coil is but 57% as sensitive as a Ferrocart coil, and at 5 kc. off resonance, the usual R.F. coil is but 77% as efficient. With these figures, a figure of merit of the coil may be obtained. The above data were taken from measurements made at 300 meters, or 1,500 kc.

The decrement of the coil at 200 meters is about .04 and drops to about .01 at 600 meters, which is to be expected. In comparison with another coil which had a decrement of .06 at 200 meters and a decrement of .035 at 600 meters, the Ferrocart coil is good.

In the article "Permeability Tuning" referred to above, tuning of the coil was accomplished by varying the amount of iron in the coil; in this coil, tuning is accomplished by a standard tuning condenser.

SPARKS WITHINGTON CO.

The Amount, Type and Function of the Tubes Used in Sparton Radio Receiving Sets, with Their Characteristics

MODEL	STYLE	YEAR	RADIO FREQUENCY	DETECTOR	POWER OR AUDIO	RECTIFIER
5	Table	1931—32	2—424	1—427	1—445	1—480
AC—5	Table	1926—27	2—401	1—401	2—401	Raytheon Type B or B.H.
AC—5	Console	1926—27	2—401	1—401	2—401	Raytheon Type B or B.H.
AC—7	Console	1927—28	3—401	1—401	1—401 and 2—’71-A or 482-A	Raytheon Type B.H.
9	Console	1931—32	2—424	1—427	1—445	1—480
9—A	Console	1931—32	2—424	1—427	2—483	1—480
AR—19	Automobile Radio	1930—31	3—424	1—424	1—412-A	....
31	Console	1930—31	3—432	1—432	1—430 and 1—431	....
32	Console	1931	3—432	1—432	1—430 and 1—431	....
39	Table	1928—29	6—486	1—401-A or 1—’01-B	1—’71-A	....
49	Table	1929—30	6—486	1—401-A or 1—’01-B	1—’71-A	....
AR—50	Police Automobile Radio	1930—31	3—424	1—427	1—412-A	....
51	Table	1931—32	3—432	1—432	1—430 and 1—431	....
52	Console	1931—32	3—432	1—432	1—430 and 1—431	....
AC—55	Police Desk and Barracks Receiver	1930—31	3—424	1—427	1—483	1—480
AC—62	Table	1927—28	3—401	1—401	1—401 and 1—’71-A or 482-A	Raytheon Type B.H.
AC—63	Table	1927—28	3—401	1—401	1—401 and 1—’71-A or 482-A	Raytheon Type B.H.
69	Table	1928—29	5—485	1—485	1—450	1—480
79	Console	1928—29	5—485	1—485	1—450	1—480
79—A	Console	1928—29	5—485	1—485	1—450	1—480

SPARKS WITHINGTON CO.

MODEL	STYLE	YEAR	RADIO FREQUENCY	DETECTOR	POWER OR AUDIO	RECTIFIER
89	Console	1928—29	5—485	1—485	1—450	1—480
89—A	Console	1928—29	5—485	1—485	1—450	2—481
99	Ensemble	1928—29	5—485	1—485	2—450 1—426	2—481
101	Ensemble	1929—30	5—485	1—485	2—450 2—426 1—427	2—481
103	Ensemble	1930—31	6—485	1—485	2—450 2—485	2—481
109	Console	1928—29	5—485	1—485	2—450	2—481
110	Console	1929—30	5—485	1—485	2—450 2—426	2—481
111	Console	1929—30	5—485	1—485	2—450 2—426	2—481
111—A	Console	1930	6—485	1—485	2—450 2—426	2—481
235	Ensemble	1930—31	6—485	1—485	2—483	1—480
301	Console	1929—30	5—485	1—485	2—450	2—481
301—D. C.	Console	1929—30	5—484-A	1—484-A	2—482-A	....
410	Table	1930—31	2—424	1—427	2—483	1—480
410—D. C.	Table	1930—31	2—424	1—427	2—483	....
420	Console	1930—31	2—424	1—427	2—483	1—480
420—D. C.	Console	1930—31	2—424	1—427	2—483	....
5—15	Table	1925—6—7	2—401-A	1—401-A	2—401-A	....
5—26	Table	1925—6—7	2—401-A	1—401-A	2—401-A	....
564	Custom Console	1930—31	6—485	1—485	2—450	2—481
570	Custom Console	1930—31	6—485	1—485	2—450	2—481
574	Custom Console	1930—31	6—485	1—485	2—450 2—426	2—481

SPARKS WITHINGTON CO.

MODEL	STYLE	YEAR	RADIO FREQUENCY	DETECTOR	POWER OR AUDIO	RECTIFIER
589	Console	1930—31	6—485	1—485	2—483	1—480
591	Console	1930—31	5—485	1—485	2—482-B or 483	1—480
593	Console	1930—31	5—485	1—485	2—482-B or 483	1—480
600	Console	1930—31	6—485	1—485	2—483	1—480
610	Console	1930—31	6—485	1—485	2—483	1—480
6—15	Table	1927—28	3—401-A	1—401-A	2—401-A	....
620	Console	1930—31	6—485	1—485	2—483	1—480
6—26	Table	1927—28	3—401-A	1—401-A	2—401-A	....
600—D. C.	Console	1930—31	6—484-A	1—484-A	2—482-A	....
610—D. C.	Console	1930—31	6—484-A	1—484-A	2—482-A	....
620—D. C.	Console	1930—31	6—484-A	1—484-A	2—482-A	....
737	Console	1931	6—485	1—485	2—483	1—480
740	Console	1930—31	6—485	1—485	2—450	2—481
750	Console	1930—31	6—485	1—485	2—450	2—481
740—D. C.	Console	1930—31	6—484-A	1—484-A	2—482-A	....
750—D. C.	Console	1930—31	6—484-A	1—484-A	2—482-A	....
870	Console	1930—31	6—485	1—485	2—450 2—426	2—481
930	Console	1929	5—485	1—485	2—482-B or 483	1—480
931	Console	1929—30	5—485	1—485	2—482-B or 483	1—480
931—D. C.	Console	1929—30	5—484-A	1—484-A	2—482-A	....

SPARKS WITHINGTON CO.

Model	Style	Year	Radio Frequency	First Detector	Oscillator	Intermediate Frequency	Second Detector	Automatic Volume Control	Power or Audio	Rectifier
10	Table	1931—32	1—435	1—435	1—427	1—435	1—427	......	1—447	1—480
15	Console	1931—32	1—435	1—435	1—427	1—435	1—427	1—427	1—447	1—480
25	Console	1931—32	1—435	1—435	1—427	2—435	1—427	1—427	2—445	1—480
26	Console	1931—32	1—435	1—435	1—427	2—435	1—427	1—427	2—445	1—480
30	Ensemble	1931—32	1—435	1—435	1—427	2—435	1—427	1—427	2—445	1—480
35	Ensemble	1931—32	1—435	1—435	1—427	2—435	1—427	1—427	2—450 and 2—427	2—481
40	Automobile Radio	1931—32	3—436	1—436	......	......	......	1—437	1—438	......
45*	Visionola	1931—32	1—435	1—435	1—427	2—435	1—427	1—427	2—445	1—480

*Projection Lamp—G.E. Type T—10, prefocus, 200 watt or equivalent.

Pilot Lamp—G.E. Type T8, 15 watt, intermediate screw base or equivalent.

Aligning Sparton Radio Receivers

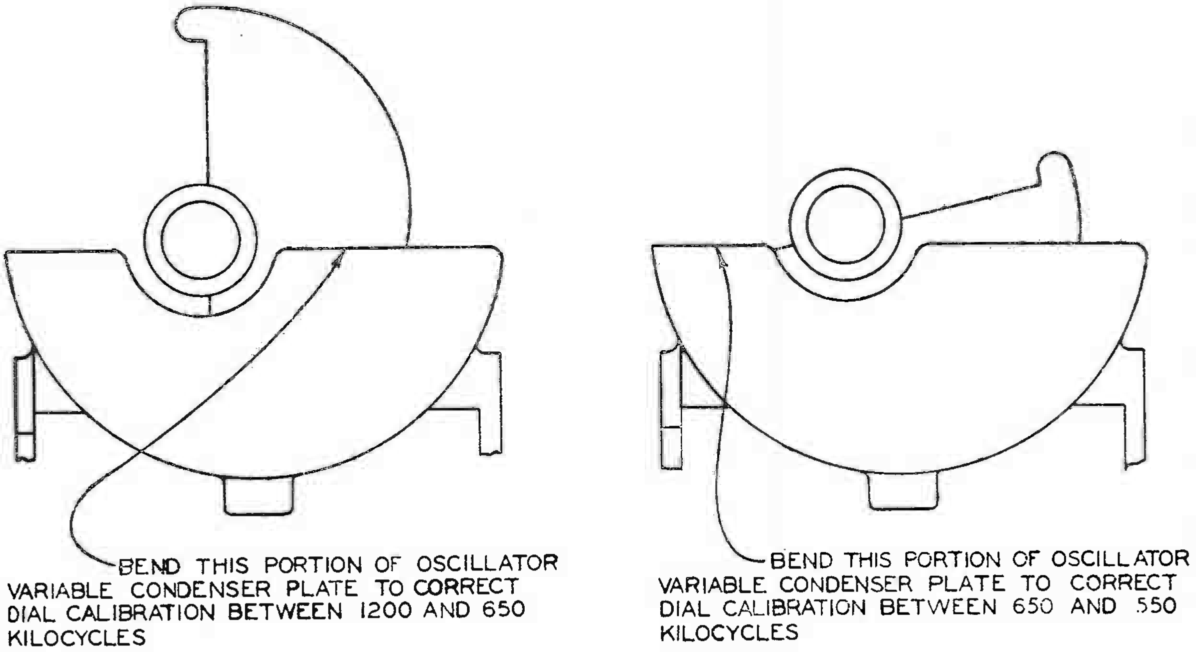

BEND THIS PORTION OF OSCILLATOR VARIABLE CONDENSER PLATE TO CORRECT DIAL CALIBRATION BETWEEN 1200 AND 650 KILOCYCLES

BEND THIS PORTION OF OSCILLATOR VARIABLE CONDENSER PLATE TO CORRECT DIAL CALIBRATION BETWEEN 650 AND 550 KILOCYCLES

ILLUSTRATING PORTION OF OSCILLATOR VARIABLE CONDENSER PLATE TO BEND WHEN CORRECTING DIAL CALIBRATION

SPARKS WITHINGTON CO.

SPARTON TUBE CHARACTERISTICS

GENERAL								DETECTION		
Type	Base	Use	Filament Heater Supply	Maximum Overall Dimensions		Filament Terminal Voltage	Filament Current Amperes	Detector Plate Voltage	Grid Return Lead to	Detector Plate Current Milli-Amperes
				Height	Diam.					
181	Side Pin, 4-Prong	Power Amplifier	A.C. or D.C.	5⅝″	2 3/16″	3.0	1.35	....	....	....
401	Side Pin, 4-Prong	Detector or Amplifier	A.C. or D.C.	5″	1¾″	3.0	1.35	45	Cath.	2
401-A	Standard, 4-Prong	Detector or Amplifier	D.C.	4 11/16″	1 3/16″	5.0	.25	45	+F	1.5
410	Standard, 4-Prong	Power Amplifier	A.C. or D.C.	5⅝″	2 3/16″	7.5	1.25	....	....	....
412-A	Standard, 4-Prong	Detector or Amplifier	D.C.	4 11/16″	1 13/16″	5.0	.25	45	+F	1.5
412-A	Standard, 4-Prong	Power Amplifier	A.C. or D.C.	4 11/16″	1 13/16″	5.0	.25	....	....	....
424	Standard, 5-Prong	R.F. Amp. or Detector	A.C. or D.C.	5¼″	1 13/16″	2.5	1.75	90—180	Cath.	1.0
424	Standard, 5-Prong	Audio Freq. Amplifier	A.C. or D.C.	5¼″	1 13/16″	2.5	1.75	....	....	....
426	Standard, 4-Prong	Amplifier	A.C. or D.C.	4 11/16″	1 13/16″	1.5	1.05	....	....	....
427	Standard, 5-Prong	Detector or Amplifier	A.C. or D.C.	4 11/16″	1 13/16″	2.5	1.75	180	Cath.	.8
430	Standard, 4-Prong	Detector or Amplifier	D.C.	4¼″	1 3/16″	2.0	.06	45	+F	1.5
431	Standard, 4-Prong	Power Amplifier	D.C.	4¼″	1 3/16″	2.0	.13	....	....	....
432	Standard, 4-Prong	Radio Freq. Amplifier	D.C.	5¼″	1 13/16″	2.0	.06	....	....	....
433	Standard, 5-Prong	Pentode Power Amplifier	D.C.	4 11/16″	1 13/16″	2.0	.26	....	....	....
435	Standard, 5-Prong	Detector Amplifier	A.C. or D.C.	5¼″	1 13/16″	2.5	1.75	250	Cath.	1.0—3.0
436	Standard, 5-Prong	Radio Freq. Amplifier	D.C.	4 11/16″	1 9/16″	6.3	.3	....	....	....
437	Standard, 5-Prong	Detector or Amplifier	D.C.	4¼″	1 9/16″	6.3	.3	45	Cath.	.5—10
438	Standard, 5-Prong	Pentode Power Amplifier	D.C.	4 11/16″	1 9/16″	6.3	.3	....	....	....
445	Standard, 4-Prong	Power Amplifier	A.C. or D.C.	5⅝″	2 3/16″	2.5	1.5	....	....	....
447	Standard, 5-Prong	Pentode Power Amplifier	A.C. or D.C.	5⅝″	2 1/16″	2.5	1.5	....	....	....
450	Standard, 4-Prong	Power Amplifier	A.C. or D.C.	6¼″	2 11/16″	7.5	1.25	....	....	....
480	Standard, 4-Prong	Full Wave Rectifier	A.C.	5⅝″	2 3/16″	5.0	2.0	....	....	....
481	Standard, 4-Prong	Half Wave Rectifier	A.C.	6¼″	2 7/16″	7.5	1.25	....	....	....
482-A	Standard, 4-Prong	Power Amplifier	D.C.	5⅝″	2⅛″	5.0	.8	....	....	....
482-B	Standard, 4-Prong	Power Amplifier	A.C. or D.C.	5⅛″	2⅛″	5.0	1.25	....	....	....
483	Standard, 4-Prong	Power Amplifier	A.C. or D.C.	5⅝″	2⅛″	5.0	1.25	....	....	....
484-A	Standard, 5-Prong	Detector or Amplifier	D.C.	4 11/16″	1 13/16″	3.0	1.6	100	Cath.	0.5
485	Standard, 5-Prong	Detector or Amplifier	A.C. or D.C.	4 11/16″	1 13/16″	3.0	1.3	135	Cath.	0.8
486	Standard, 5-Prong	Radio Freq. Amplifier	D.C.	4 11/16″	1 13/16″	3.0	.25	....	....	....

*Recommended values for use in Auotmobile Receivers.
†Recommended values for use in Receivers designed for 110 volts D.C. operation.

SPARTON TUBE CHARACTERISTICS

AMPLIFICATION										
Amplifier Plate Voltage	Grid Bias Voltage—		Amplifier Plate Current Milli-Amperes	Screen Grid Volts +	Screen Current Milliamperes	Plate Impedance Ohms	Mutual Conductance Micromhos	Voltage Amplification Factor	Ohms Load for Maximum Undistorted Output	Maximum Undistorted Output Milli-watts
	D.C. On Fil.	A.C. On Fil.								
180	30.0	30.0	16	....	....	2,850	1050	3.0	....	....
90 180	3.0 13.5	3.0 13.5	5 6	....	....	9,500 7,000	1000 1200	9.5 8.7	....	....
90 135	4.5 9.0	......	2.5 3.0	....	....	11,000 10,000	725 800	8.0 8.0	11,000 20,000	15 55
250 350 425	18.0 27.0 35.0	22.0 31.0 39.0	10 16 18	....	....	6,000 5,150 5,000	1330 1550 1600	8.0 8.0 8.0	13,000 11,000 10,000	400 900 1600
90 135	4.5 9.0	....	5.2 6.2	....	....	5,600 5,300	1500 1500	8.5 8.5	5,600 7,800	30 120
135 157.5 180	9.0 10.5 13.5	11.5 13.0 16.0	6.2 9.5 7.6	....	....	5,300 4,700 5,000	1600 1700 1700	8.5 8.5 8.5	8,700 3,700 10,800	120 195 275
180 180	1.5 3.0	1.5 3.0	4.0 4.0	75 90	Not Over One-Third of Plate Current	400,000 400,000	1050 1000	420 400	....	....
250	1.0	1.0	0.5	25	....	200,000	500	1000	....	....
90 135 180	5.0 8.0 12.5	6.0 9.0 13.5	3.8 6.3 7.4	....	....	8,600 7,200 7,000	955 1135 1170	8.2 8.2 8.2	9,800 8,800 10,500	30 80 160
90 180	6.0 13.5	6.0 13.5	2.7 5.0	....	....	10,800 9,300	950 1150	12.5 12.5	....	....
90	4.5	......	2.0	....	....	12,500	700	8.8	....	....
135	22.5	......	8.0	....	....	4,000	875	3.5	....	170
135	3.0	......	1.5	67.5	Not Over One-Third of Plate Current	800,000	550	400	....	....
135	13.5	......	14.0	135	3	45,000	1400	65	7,500	650
250	3.0	3.0	7.0	90	2.5 Maximum	350,000	1050	Controlled	....	....
90† 135* 135	1.5† 1.5* 1.5	......	1.8 3.0 3.5	55† 67.5* 75	Not Over One-Third of Plate Current	200,000 300,000 250,000	850 1050 1100	170 350 275	....	....
90† 135	6† 9	......	2.7 4.5	....	....	11,500 10,000	780 900	9.0 9.0	14,000 12,500	30 75
135	13.5	......	8.0	135	2.5	110,000	900	100	15,000	375
180 250	33.0 48.5	34.5 50.0	25 34	....	....	1,900 1,750	1850 2000	3.5 3.5	3,500 3,900	780 1600
250	15.0	16.5	32	250	2.5	38,000	2500	100	7000	2500
250 350 400 450	41.0 59.0 66.0 80.0	45.0 63.0 70.0 84.0	28 45 55 55	....	....	2,100 1,900 1,800 1,800	1800 2000 2100 2100	3.8 3.8 3.8 3.8	4,300 4,100 3,670 4,350	1000 2400 3400 4600
Maximum A.C. Voltage Per Plate 350 Volts R.M.S. Maximum Rectified Current 125 M.A.										
Maximum A.C. Voltage Per Plate 700 Volts R.M.S. Maximum Rectified Current 85 M.A.										
200	45	......	18	....	....	2,000	1500	3.0	4500	1500
250	32.5	35	18	....	....	3,330	1500	5.0	4500	1750
250 250	65.5 63.5	58.0 65.0	20 26	....	....	2,000 1,500	1500 2000	3.0 3.0	4500	2000
90 180	3 9	3 9	5 6	....	....	10,800 9,300	1150 1350	12.5 12.5	....	....
90 180	3 9	3 9	5 6	....	....	10,800 9,300	1150 1350	12.5 12.5	....	....
90	3.0	......	3.0	....	....	28,000	450	12.5	....	....

SPARKS WITHINGTON CO.

SCHEMATIC DIAGRAM
SPARTON MODELS 16-AW AND 26-AW SHORT-WAVE UNIT

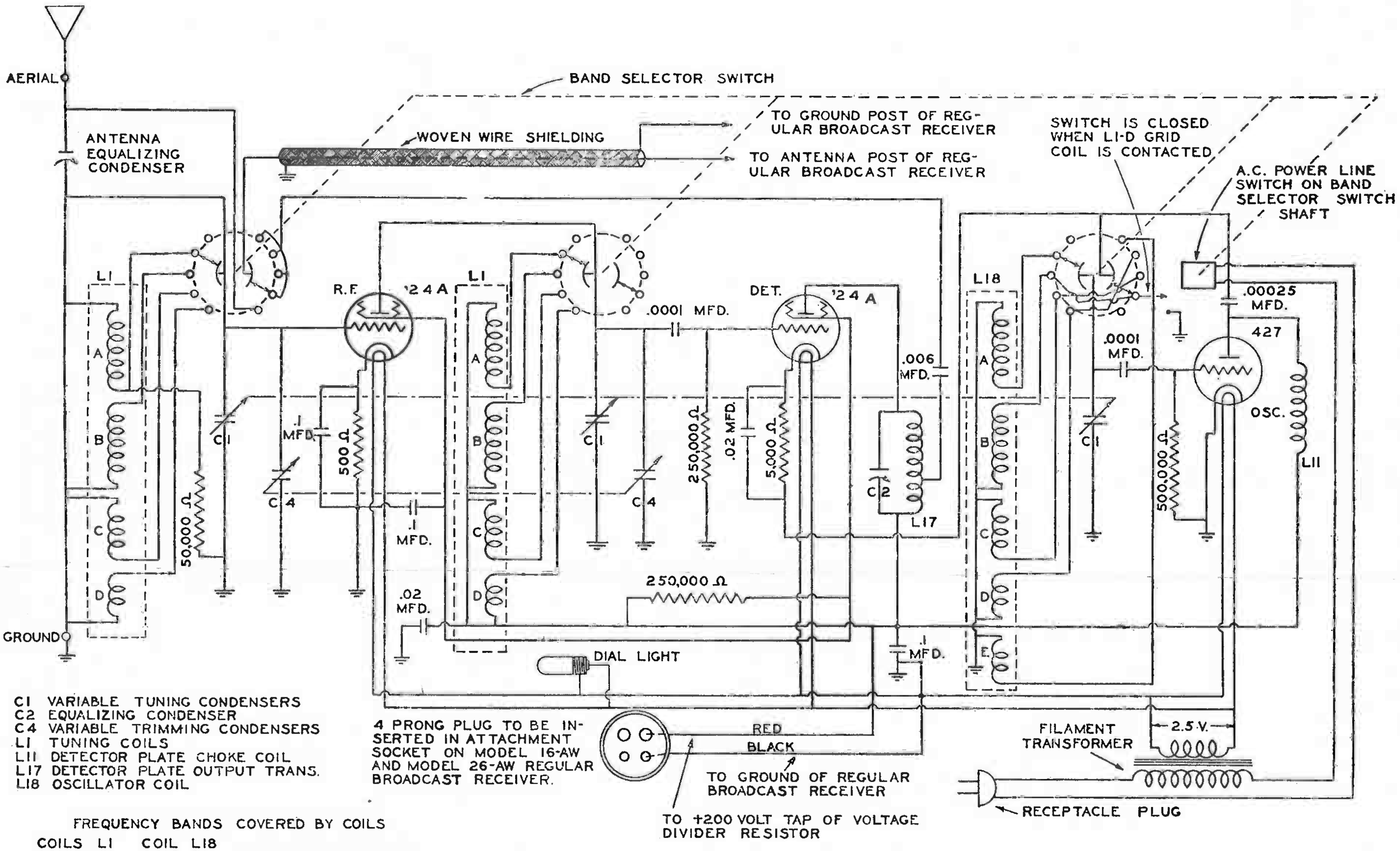

4 PRONG PLUG TO BE INSERTED IN ATTACHMENT SOCKET ON MODEL 16-AW AND MODEL 26-AW REGULAR BROADCAST RECEIVER.

TO GROUND OF REGULAR BROADCAST RECEIVER

TO +200 VOLT TAP OF VOLTAGE DIVIDER RESISTOR

C1 VARIABLE TUNING CONDENSERS
C2 EQUALIZING CONDENSER
C4 VARIABLE TRIMMING CONDENSERS
L1 TUNING COILS
L11 DETECTOR PLATE CHOKE COIL
L17 DETECTOR PLATE OUTPUT TRANS.
L18 OSCILLATOR COIL

FREQUENCY BANDS COVERED BY COILS

COILS L1	COIL L18	
A	A & B	1.5-3.7 MEGACYCLES
B	B & C	3.2-7.55 MEGACYCLES
C	C & D	7.2-15.5 MEGACYCLES
D	D & E	15.2-25.5 MEGACYCLES

SPARKS WITHINGTON CO.

MODEL 26-AW VOLTAGE-CURRENT CHARACTERISTICS

Line Voltage 115—Position of Voltage Compensator 115-130—Position of Volume Control Full

Tube	Location	Heater or Filament	Plate	Control Grid —	Screen Grid +	Plate Current M. A.
'35	R. F.	2.2 - 2.5	170 - 205	2.5 - 4	80 - 100	4 - 6
'35	1st Det.	2.2 - 2.5	170 - 205	*6.4 - 14	80 - 100	*0.8 - 1.8
'35	1st I. F.	2.2 - 2.5	175 - 210	2.5 - 4	80 - 100	4 - 6
'35	2nd I. F.	2.2 - 2.5	175 - 210	2.5 - 4	80 - 100	4 - 6
427	Oscillator	2.2 - 2.5	80 - 100	†	---------	x
427	2nd Det.	2.2 - 2.5	165 - 205	14 - 20	---------	0.7 - 1.0
427	A. V. C.	2.2 - 2.5	‡	30 - 45	---------	Zero
'45	Power	2.2 - 2.5	225 - 270	§28 - 45	---------	20 - 30
'45	Power	2.2 - 2.5	225 - 270	§28 - 45	---------	20 - 30
'80	Rectifier	4.4 - 5	380 - 440	---------	---------	48 - 58
MODEL 26-AW SHORT-WAVE UNIT						
'24-A	R. F.	2.2 - 2.4	170 - 200	2 - 3	70 - 100	3 - 6
'24-A	Detector	2.2 - 2.4	170 - 200	¶5 - 6	70 - 100	0.2 - 1
427	Oscillator	2.2 - 2.4	170 - 200	†	---------	x

* Remove oscillator Tube † Tube generates own bias when oscillating.

¶ Presence of voltage can only be determined by testing circuit continuity and measuring the plate and screen grid grid current of this tube. Voltage is five thousand times current in amperes.

x Measure with plug in second detector socket and tube in test kit.

‡ Test kit reading. True voltage is 125 volts.

§ Meter reading on 150 volt scale. True voltage 50-75. If lower scale voltmeter is used, expect lower voltage.

IMPORTANT

The voltage characteristics of the Model 25, 26 and 26-AW SPARTON Radio were obtained with a Radio Set Analyzer equipped with 1,000 ohm per volt Voltmeters. Only Voltmeters of this grade should be used when comparing voltage and current values obtained in a test with the values of the chart.

Model 41

Voltage - Current Characteristics (For 135 Volts of "B" Battery)

Condition of "A" Battery Good
Condition of "B" Battery Good
Condition of "C" Battery Good
Position of Volume Control Full with no signal

		OPERATING VOLTAGES				
Tube	Location	Filament or Heater	Plate	Control Grid —	Screen Grid +	Plate Current Mills.
'36	1st R F	6	135	1.5	67.5	1.5
'36	2nd R F	6	135	1.5	67.5	1.5
'36	3rd R F	6	135	1.5	67.5	1.5
'37	Detector	6	125	10	67.5	.5
'38	Power	4 - 5	135	18	135	6 - 8

IMPORTANT

The voltage-current characteristics of the SPARTON Model 41 Police Automobile Radio Receiver were obtained with a Radio Set Analyzer equipped with 1,000 ohm per volt Voltmeters. Only Voltmeters of this grade should be used when comparing voltage and current values obtained in a test with the values in the chart.

SPARKS WITHINGTON CO.

SPARTON MODEL 45 (VISIONOLA) SCHEMATIC DIAGRAM

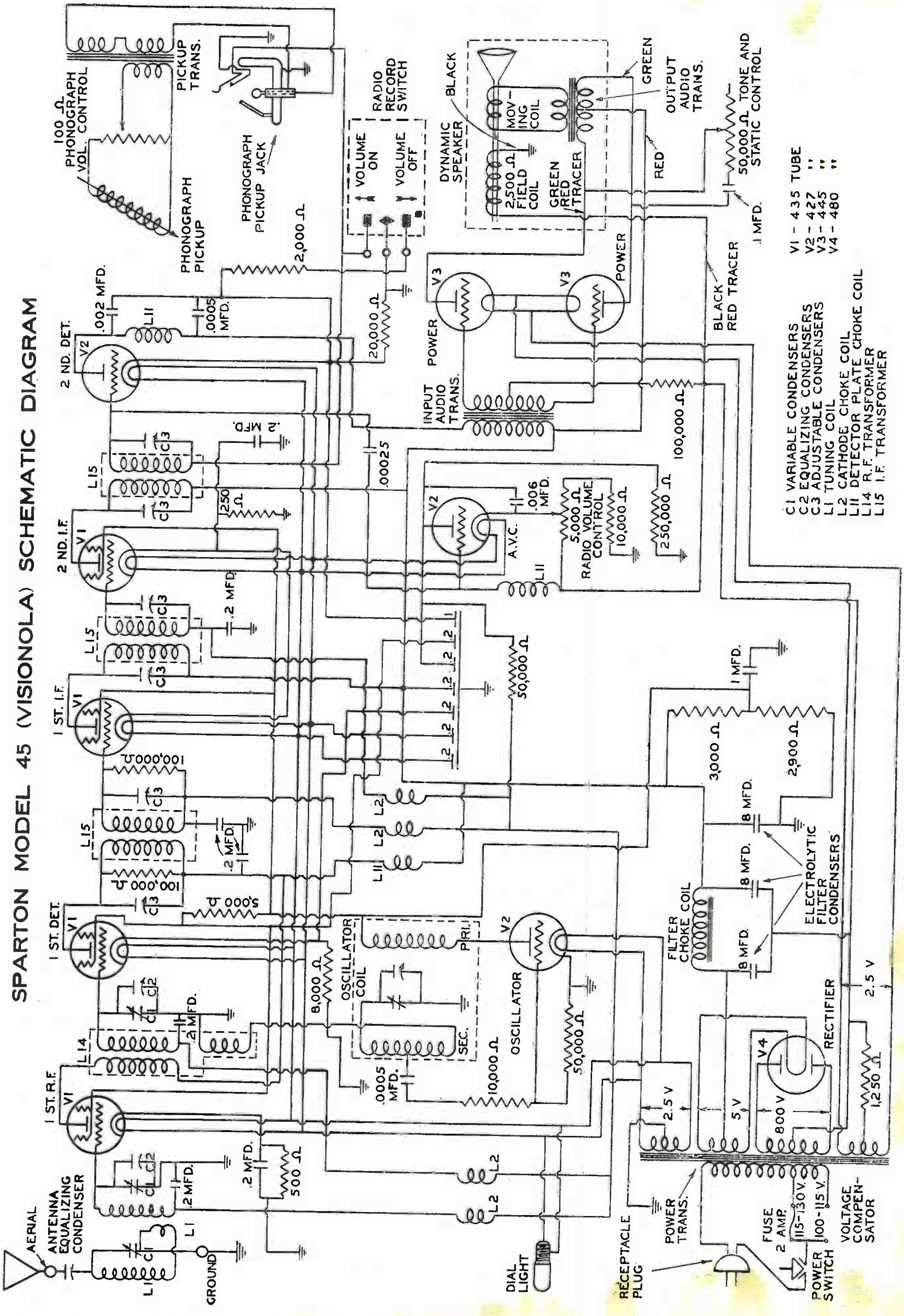

SPARKS WITHINGTON CO.

Voltage-Current Characteristics

MODEL 45

Line Voltage 115—Position of Voltage Compensator 100-115—Position of Volume Control Full

Tube	Location	OPERATING VOLTAGES				Plate Current Mills.
		Heater or Filament	Plate	Control Grid—	Screen Grid+	
435	1st R. F.	2.2 - 2.5	180 - 220	2.5 - 4	80 - 100	5 - 8
435	1st Det.	2.2 - 2.5	180 - 220	*6.4 - 14	80 - 100	*.8 - 1.8
435	1st I. F.	2.2 - 2.5	180 - 220	2.5 - 4	80 - 100	5 - 8
435	2nd I. F.	2.2 - 2.5	180 - 220	2.5 - 4	80 - 100	5 - 8
427	Oscillator	2.2 - 2.5	80 - 100	†	....	‡
427	2nd Det.	2.2 - 2.5	170 - 205	14 - 20	....	.7 - 1.0
427	A. V. C.	2.2 - 2.5	§	20 - 50	....	Zero
445	Power	2.2 - 2.5	225 - 270	‖30 - 45	....	20 - 30
445	Power	2.2 - 2.5	225 - 270	‖30 - 45	....	20 - 30
480	Rectifier	4.2 - 5	360 - 440	....	....	48 - 58

* Remove oscillator tube.

† Tube generates own bias when oscillating.

‖ Meter reading use 150 volt scale—true voltage 50-75—if lower scale voltmeter is used expect lower voltages.

§ Test from grid prong to ground approx. 125 volts.

‡ Test with plug in 2nd. Detector socket and tube in Analyzer.

IMPORTANT

The voltage current characteristics of the Model 45 (Visionola) SPARTON Radio were obtained with a Radio Set Analyzer equipped with 1,000 ohm per volt Voltmeters. Only Voltmeters of this grade should be used when comparing voltage and current values obtained in a test with the values of the chart.

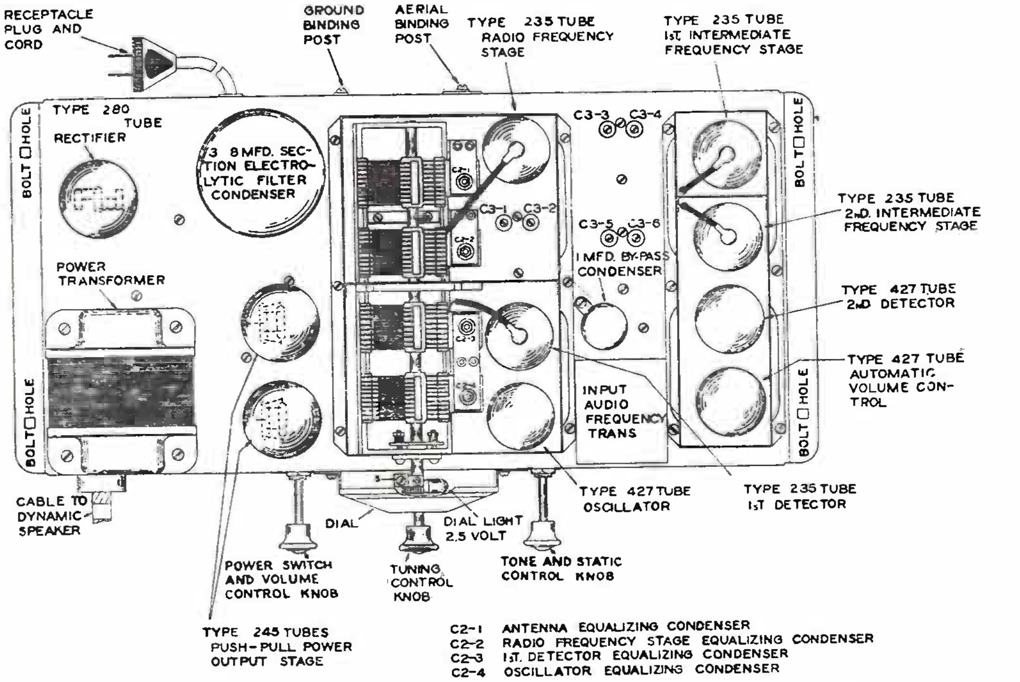

C3-1 I. F. Stage First Adjustable Condenser
C3-2 I. F. Stage Second Adjustable Condenser
C3-3 I. F. Stage Third Adjustable Condenser
C3-4 I. F. Stage Fourth Adjustable Condenser
C3-5 I. F. Stage Fifth Adjustable Condenser
C3-6 I. F. Stage Sixth Adjustable Condenser

TOP VIEW OF MODEL 45 (VISIONOLA) SUPERHETRODYNE CHASSIS

SPARKS WITHINGTON CO.

POLICE RADIO
SPARTON MODEL 56 SCHEMATIC DIAGRAM

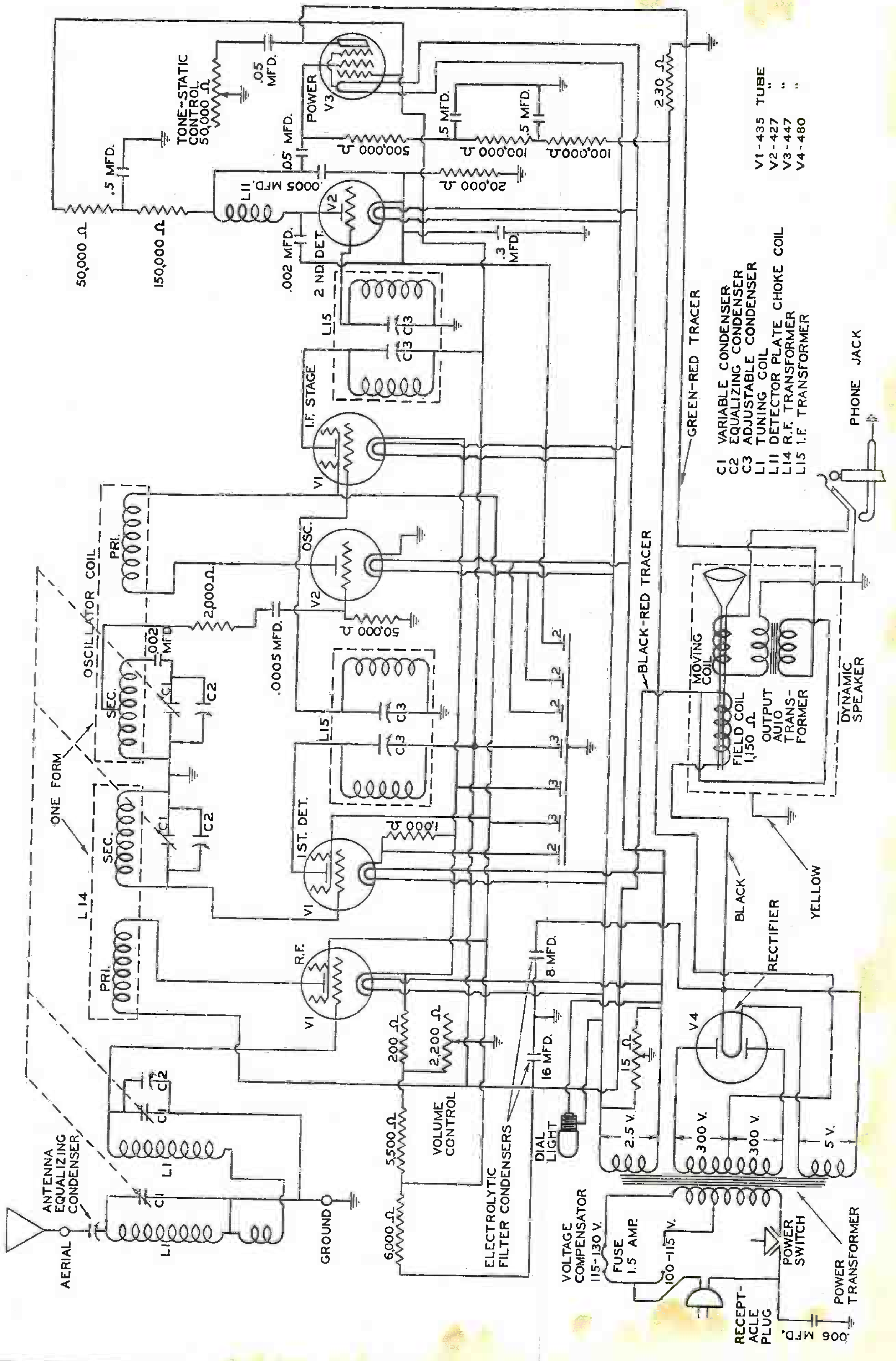

SPARKS WITHINGTON CO.

Model 56

Voltage Current Characteristics

Line Voltage 115—Position of Voltage Compensator 100-115—Position of Volume Control Full

		OPERATING VOLTAGES				
Tube	Location	Heater or Filament	Plate	Control Grid —	Screen Grid +	Plate Current Mills.
435	1st R. F.	2.2 - 2.5	230 - 270	2.5 - 4.0	85 - 100	5 - 8
435	1st Det.	2.2 - 2.5	230 - 270	**4.5 - 7.5	85 - 100	**1.8 - 3.5
435	1st I. F.	2.2 - 2.5	230 - 270	2.5 - 4.0	85 - 100	5 - 8
427	Oscillator	2.2 - 2.5	85 - 110	†	....	‡
427	2nd Det.	2.2 - 2.5	*100 - 135	8 - 14	....	4.0 - .7
447	Power	2.2 - 2.5	220 - 260	15 - 18	230 - 270	30 - 36
480	Rectifier	4.2 - 5	360 - 420	....	....	40 - 55

*Use 300 volt scale.

**Remove Oscillator tube.

†Tube generates own bias when oscillating.

‡Test with plug in 2nd. Detector socket and tube in analyzer.

IMPORTANT

The voltage current characteristics of the Model 56 SPARTON Police Radio were obtained with a Radio Set Analyzer equipped with 1,000 ohm per volt Voltmeters. Only Voltmeters of this grade should be used when comparing voltage and current values obtained in a test with the values in the chart.

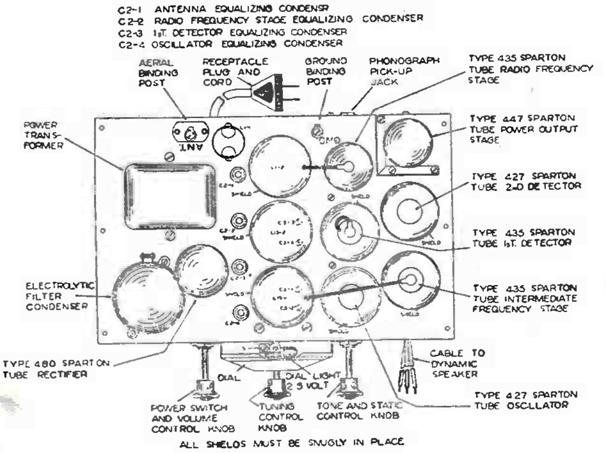

TOP VIEW SPARTON POLICE MODEL 56 SUPERHETERODYNE CHASSIS

L1-1	First R. F. Tuning Coil
L1-2	Second R. F. Tuning Coil
L15-1	First I. F. Transformer (1st. Det. to I.F. Stage)
L15-2	Second I. F. Transformer (I.F. to 2nd. Det. Stage)
C3-1	I. F. Stage First Adjustable Condenser
C3-2	I. F. Stage Second Adjustable Condenser
C3-3	I. F. Stage Third Adjustable Condenser
C3-4	I. F. Stage Fourth Adjustable Condenser

SPARKS WITHINGTON CO.

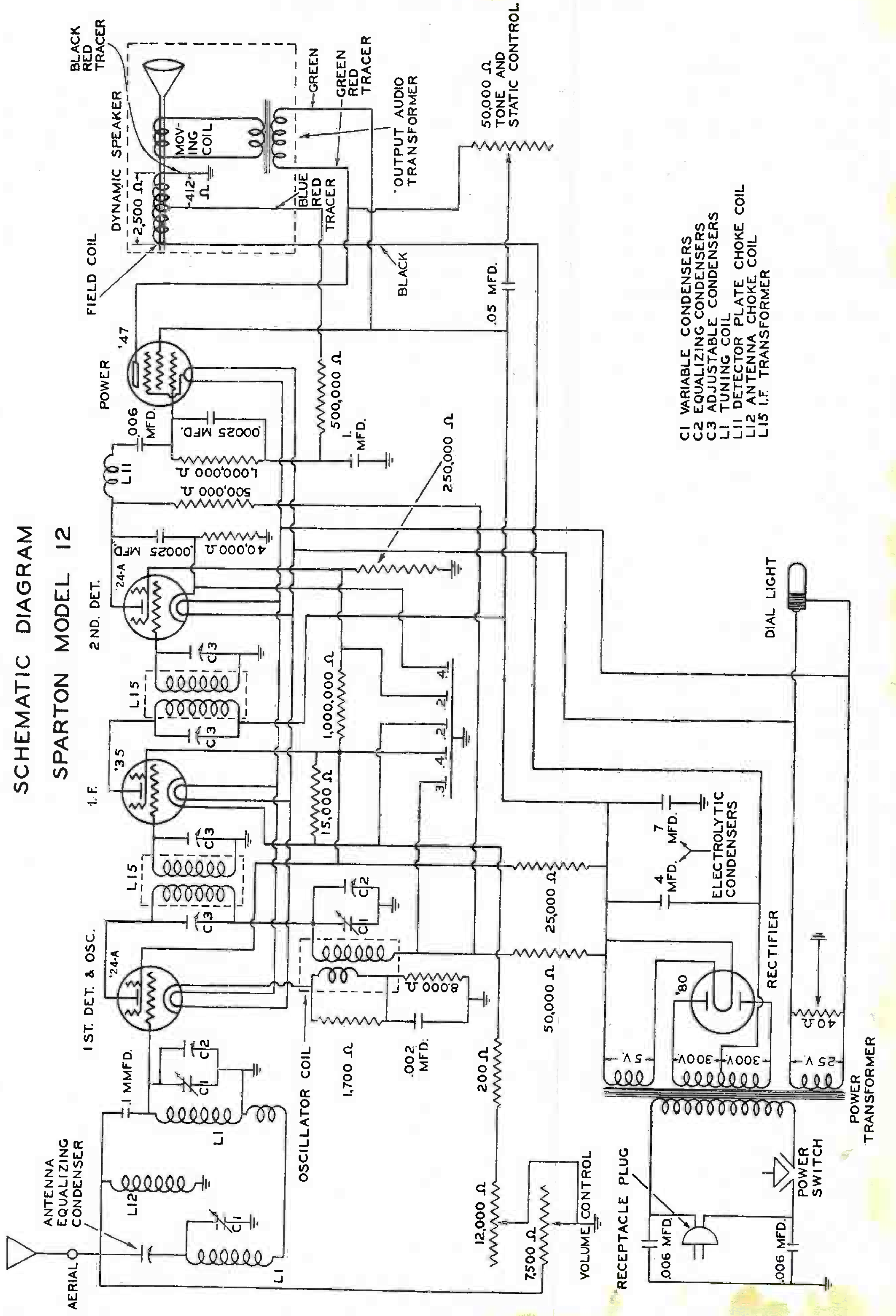

SCHEMATIC DIAGRAM
SPARTON MODEL 12

SPARKS WITHINGTON CO.

VOLTAGE CURRENT CHARACTERISTICS

LINE VOLTAGE 115 POSITION OF VOLUME CONTROL FULL

Tube	Location	Heater or Filament	Plate	Control Grid —	Screen Grid +	Plate Current M. A.
'24-A	1st Det.-Osc.	2.2 - 2.5	149 - 171	9.2 - 10.8	58 - 70	.9 - 1.1
'24-A	2nd Det.	2.2 - 2.5	62 - 74	1.6 - 2.0	5.4 - 6.6	.17 - .20
'35	I. F.	2.2 - 2.5	227 - 253	3.2 - 3.8	58 - 70	6.9 - 8.1
'47	Power	2.2 - 2.5	221 - 247	11.0 - 13.0	237 - 263	21.5 - 25.3
'80	Rectifier	4.4 - 5.0	339 - 375	--------	--------	19 - 23

MODEL 16 VOLTAGE-CURRENT CHARACTERSTICS

Line Voltage 115—Position of Voltage Compensator 115-130—Position of Volume Control Full

Tube	Location	Heater or Filament	Plate	Control Grid —	Screen Grid +	Plate Current M. A.
'35	R. F.	2.2 - 2.5	255 - 285	2 - 3	80 - 100	3.5 - 6.0
'35	1st Det.	2.2 - 2.5	245 - 275	*4 - 6	80 - 100	2.7 - 3.1
'35	I. F.	2.2 - 2.5	255 - 285	2 - 3	80 - 100	3.5 - 6.0
427	Oscillator	2.2 - 2.5	70 - 100	†	--------	¶3.0 - 5.0
427	2nd Det.	2.2 - 2.5	235 - 265	18 - 23	--------	0.8 - 1.2
427	A. V. C.	2.2 - 2.5	25 - 35	27 - 35	--------	Zero
'47	Power	2.2 - 2.5	245 - 275	17 - 20	255 - 285	20 - 28
'47	Power	2.2 - 2.5	245 - 275	17 - 20	255 - 285	20 - 28
'80	Rectifier	4.4 - 5.0	360 - 410	--------	--------	35 - 45

MODEL 16-AW VOLTAGE-CURRENT CHARACTERISTICS

Line Voltage 115—Position of Voltage Compensator 115-130—Position of Volume Control Full

Tube	Location	Heater or Filament	Plate	Control Grid —	Screen Grid +	Plate Current M. A.
'35	R. F.	2.2 - 2.5	250 - 280	2 - 3	80 - 100	3.5 - 6.0
'35	1st Det.	2.2 - 2.5	245 - 275	*4 - 6	80 - 100	2.7 - 3.1
'35	I. F.	2.2 - 2.5	250 - 280	2 - 3	80 - 100	3.5 - 6.0
427	Oscillator	2.2 - 2.5	70 - 100	†	--------	¶3.0 - 5.0
427	2nd Det.	2.2 - 2.5	230 - 260	18 - 23	--------	0.8 - 1.2
427	A. V. C.	2.2 - 2.5	25 - 35	27 - 35	--------	Zero
'47	Power	2.2 - 2.5	240 - 275	17 - 20	250 - 280	20 - 28
'47	Power	2.2 - 2.5	240 - 275	17 - 20	250 - 280	20 - 28
'80	Rectifier	4.4 - 5.0	360 - 410	--------	--------	38 - 48

MODEL 16-AW SHORT-WAVE UNIT

'24-A	R. F.	2.2 - 2.5	230 - 280	2 - 3	70 - 100	3.0 - 6.0
'24-A	Detector	2.2 - 2.5	230 - 280	‡5 - 6	70 - 100	0.2 - 1.0
427	Oscillator	2.2 - 2.5	230 - 280	†	--------	x

* True value. Amount is less if measured on test kit.

¶ True value. Amount is more if measured on test kit.

x Measure with plug in second detector socket and tube in test kit.

‡ Presence of voltage can only be determined by testing circuit continuity and measuring the plate and screen grid current of this tube. Voltage is five thousand times current in amperes.

† Tube generates own bias when oscillating.

IMPORTANT

The voltage current characteristics of the Model 16 and 16-AW SPARTON Radio were obtained with a Radio Set Analyzer equipped with 1,000 ohm per volt Voltmeters. Only Voltmeters of this grade should be used when comparing voltage and current values obtained in a test with the values of the chart.

SPARKS WITHINGTON CO.

SCHEMATIC DIAGRAM SPARTON MODEL 16 AND SPARTON MODEL 16-AW REGULAR BROADCAST RECEIVER

See reverse side for Schematic Diagram of Model 16-AW Short Wave Unit

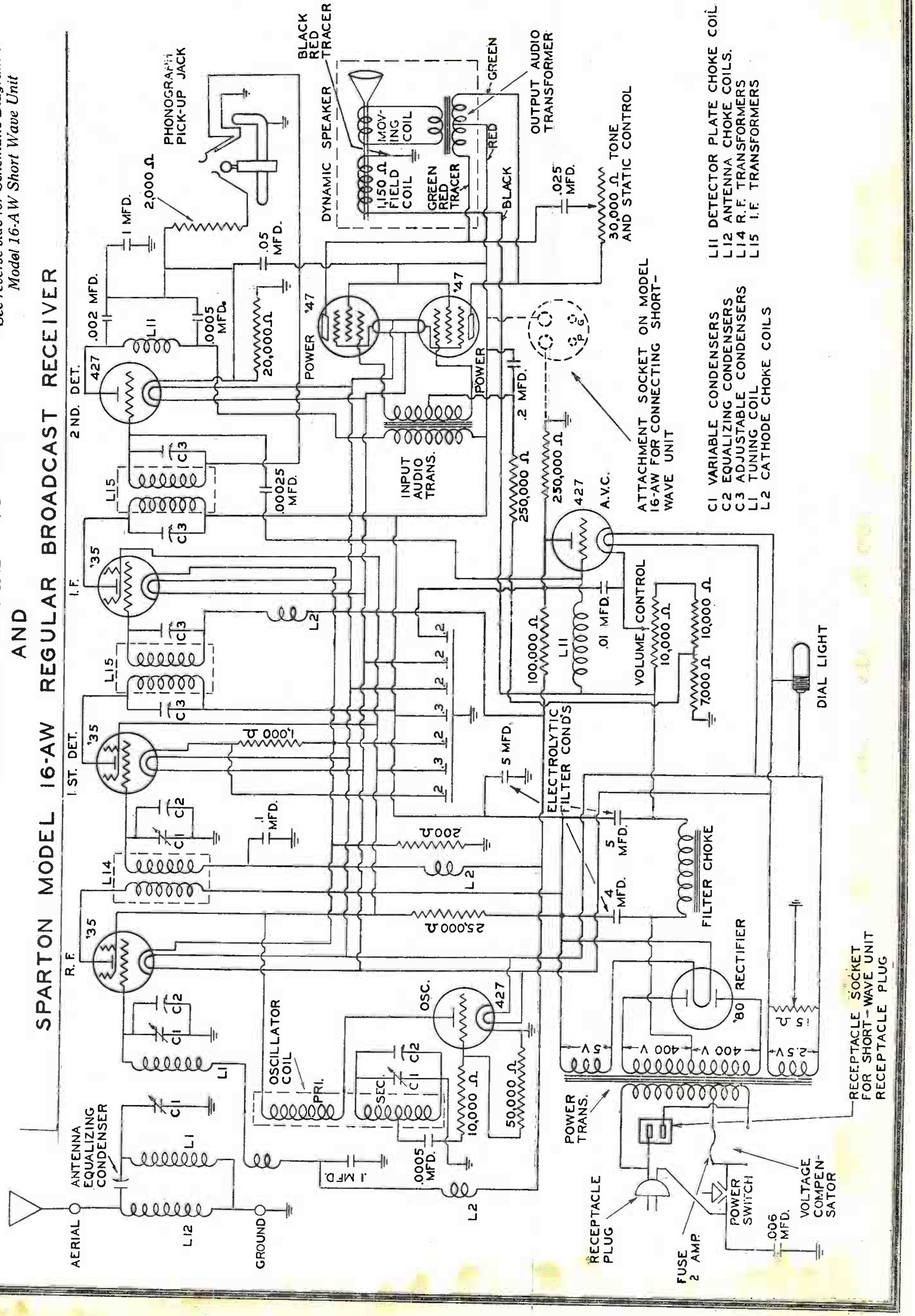

C1 VARIABLE CONDENSERS
C2 EQUALIZING CONDENSERS
C3 ADJUSTABLE CONDENSERS
L1 TUNING COIL
L2 CATHODE CHOKE COILS

L11 DETECTOR PLATE CHOKE COIL
L12 ANTENNA CHOKE COILS.
L14 R.F. TRANSFORMERS
L15 I.F. TRANSFORMERS

SPARKS WITHINGTON CO.

SCHEMATIC DIAGRAM SPARTON MODEL 60 SHORT-WAVE CONVERTER

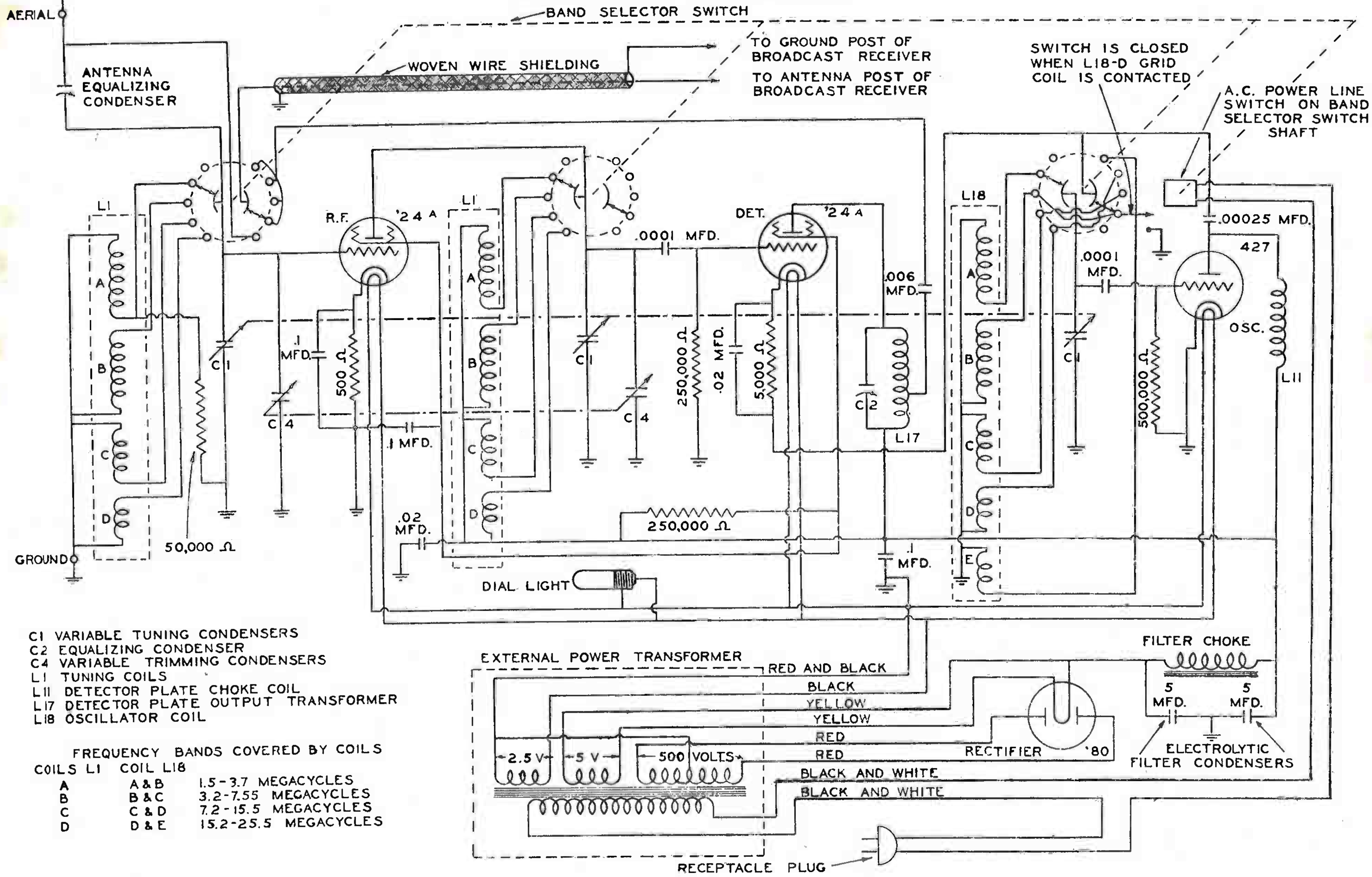

C1 VARIABLE TUNING CONDENSERS
C2 EQUALIZING CONDENSER
C4 VARIABLE TRIMMING CONDENSERS
L1 TUNING COILS
L11 DETECTOR PLATE CHOKE COIL
L17 DETECTOR PLATE OUTPUT TRANSFORMER
L18 OSCILLATOR COIL

FREQUENCY BANDS COVERED BY COILS

COILS L1	COIL L18	
A	A & B	1.5-3.7 MEGACYCLES
B	B & C	3.2-7.55 MEGACYCLES
C	C & D	7.2-15.5 MEGACYCLES
D	D & E	15.2-25.5 MEGACYCLES

SPARKS WITHINGTON CO.

Schematic Drawing of Sparks Ensemble Model 101

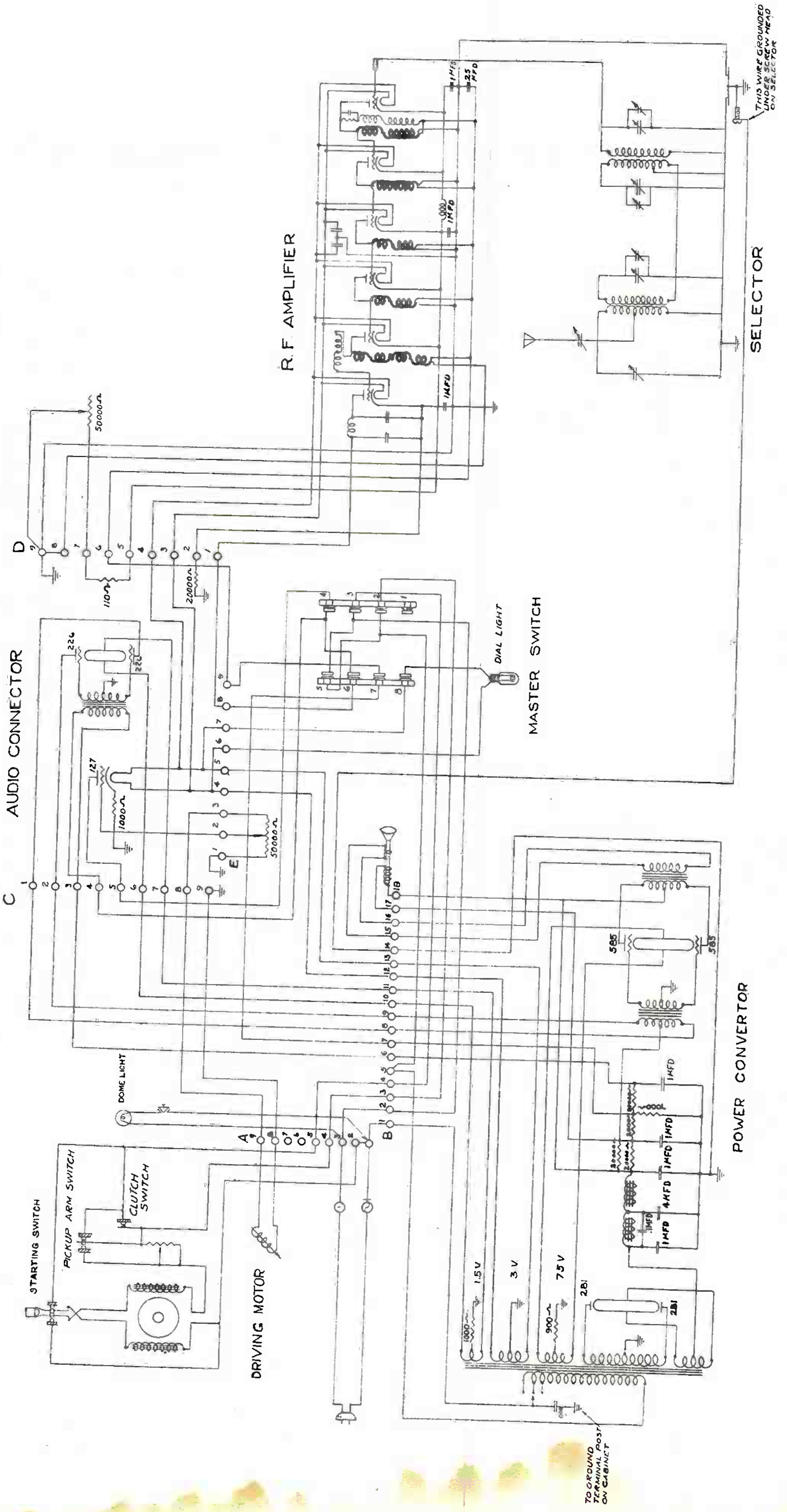

SPARKS WITHINGTON CO.

Graphic Drawing and Color Code of Sparks Ensemble No. 101

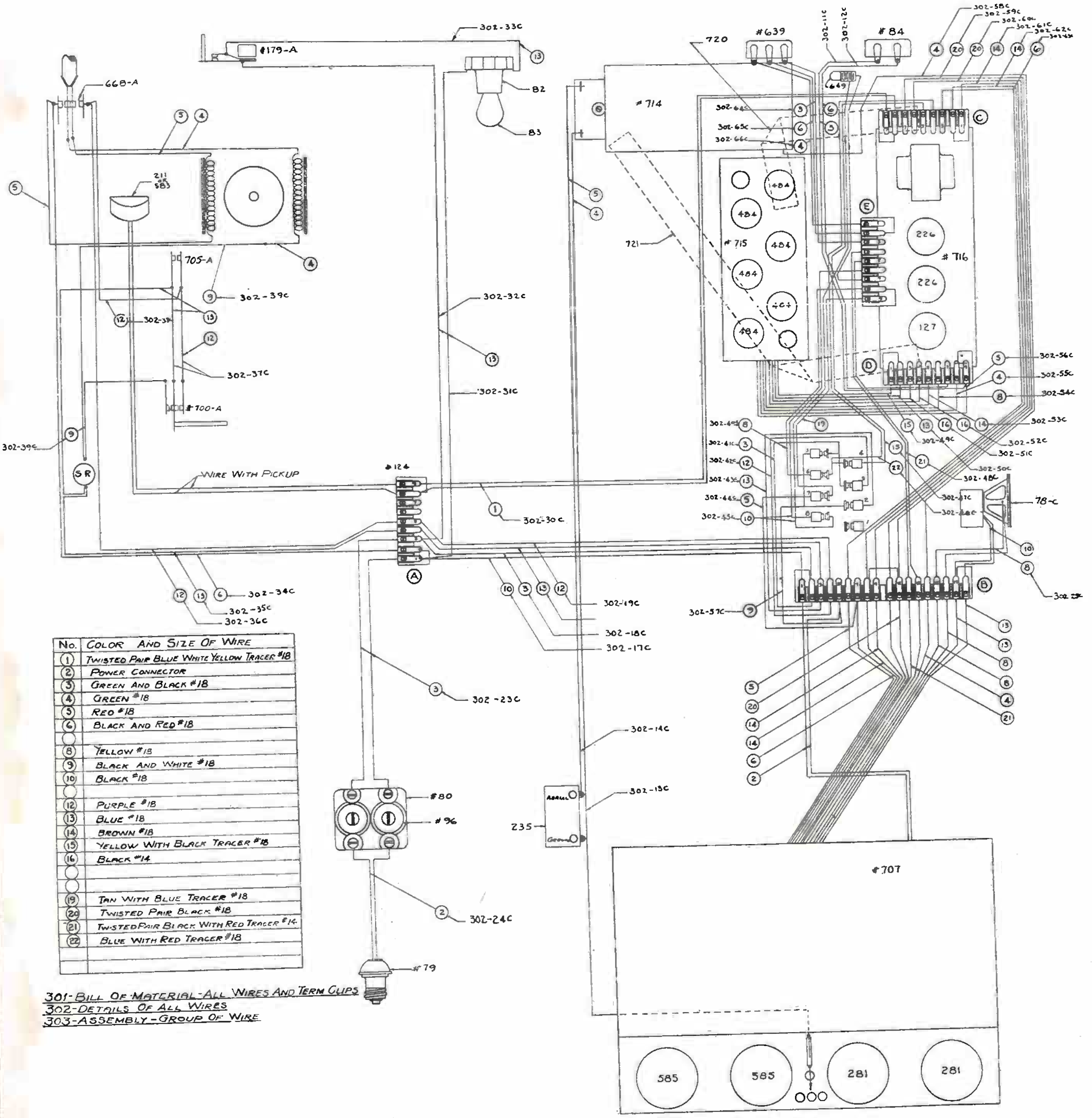

No.	Color And Size Of Wire
①	Twisted Pair Blue White Yellow Tracer #18
②	Power Connector
③	Green And Black #18
④	Green #18
⑤	Red #18
⑥	Black And Red #18
○	
⑧	Yellow #18
⑨	Black And White #18
⑩	Black #18
○	
⑫	Purple #18
⑬	Blue #18
⑭	Brown #18
⑮	Yellow With Black Tracer #18
⑯	Black #14
○	
○	
⑲	Tan With Blue Tracer #18
⑳	Twisted Pair Black #18
㉑	Twisted Pair Black With Red Tracer #14
㉒	Blue With Red Tracer #18

301-Bill Of Material-All Wires And Term Clips
302-Details Of All Wires
303-Assembly-Group Of Wire

SPARKS WITHINGTON CO.

Service Data Measurements, Sparton Equasonne Receiver Model 930

MAKE ALL TESTS WITH VOLUME CONTROL ON FULL AND VOLTAGE ADJUSTER ON PROPER TAP.

Test line voltage and set voltage adjuster to corresponding voltage or voltage higher. 0-160 volts A. C. voltmeter.

TEST WITH 0-300 VOLTMETER.

TEST NO. 1

Detector plate voltage.

Measure detector plate voltage between terminals one and two. Normal voltage here should be 188 volts without phonograph pickup in jack, and 115 with pickup. The limits of variation are 150 volts to 250 volts without pickup, and 90 to 140 volts with pickup. More or less than this indicates a defective plate circuit, possibly in resistance R 20,000.

TEST NO. 2

R. F. Amplifier plate voltage.

Measured between terminals five and six the radio frequency amplifier plate voltage should be 112 volts. The limits for this voltage are: 90 to 135 volts, and more or less than these values indicates that there is trouble in the plate circuit which might be caused by defective resistance R 10,000 or speaker field.

TEST WITH 0-75 D. C. VOLTMETER.

TEST NO. 3

Detector bias voltage.

Measure between terminals two and nine; normal bias is —17 volts. Allowable limits of variation are —14 and —20. Voltages above or below this may indicate a defective resistance R 20,000 A, or connections.

Detector bias voltage with pickup plugged in should read between three and five volts. More or less than these voltages indicate defective circuit which may be in resistance R 1,000.

TEST NO. 4

Radio Frequency bias.

Measured between five and nine R. F. bias normally —4 volts. The limits being —5 to —3. More or less than this, results in loss in volume and indicates defective resistance R 110 or abnormal R. F. plate current. With volume off a wide variation of the above voltage is obtained but is not of consequence.

0 TO 4 A. C. VOLTMETER.

TEST NO. 5

Heater voltages.

(A) Detector and radio frequency heater voltage measured between terminal three and four. Normal 2.97 volts and more than this is dangerous to the tubes and greatly shortens their life; however, they may be run at as low a voltage as will give satisfactory volume. The maximum voltage allowable on these terminals is 3.1 volts, and this should never be exceeded. If the voltage is higher than normal, place voltage adjuster on next higher voltage tap.

TEST NO. 6

TEST KIT MEASUREMENTS.

Remove A. F. tube and place in test kit socket. Place test kit plug in A. F. socket.

(A) Measure filament voltage by pressing 8.0 volt button. Normal 4.75 volts. Limits 4.4 to 5.0.

(B) Measure grid bias by pressing "C" voltage button. Normal 45. Limits 38 to 52 volts. Readings greater or less than these show resistance R 1700 defective or abnormal plate current.

SPARKS WITHINGTON CO.

(C) Plate voltage. Measure plate voltage by pressing "B" voltage 300. Normal 185 volts. Limits 225 to 145.

ADJUSTMENT OF AERIAL COMPENSATING CONDENSER.

TEST NO. 7

Select a station, preferably a local, and at a time when it is the only station to be heard. Remove the aerial wire and put it on the connector between the selector and amplifier. If the station is heard at nearly the same volume, the selector is in adjustment.

To adjust selector: Turn volume control to full and tune in some station of 1250 kilocycles or higher frequency. Adjust aerial compensating condenser until maximum response is obtained in speaker.

TEST OF POWER CONVERTER.

TEST NO. 8

Turn off set and remove detector tube. Connect leads to a 4.5 volt "C" battery. Place one of these leads in terminal No. 1 and touch other to terminal No. 2. If click is heard in speaker, power converter is okey, providing amplifier tube is good.

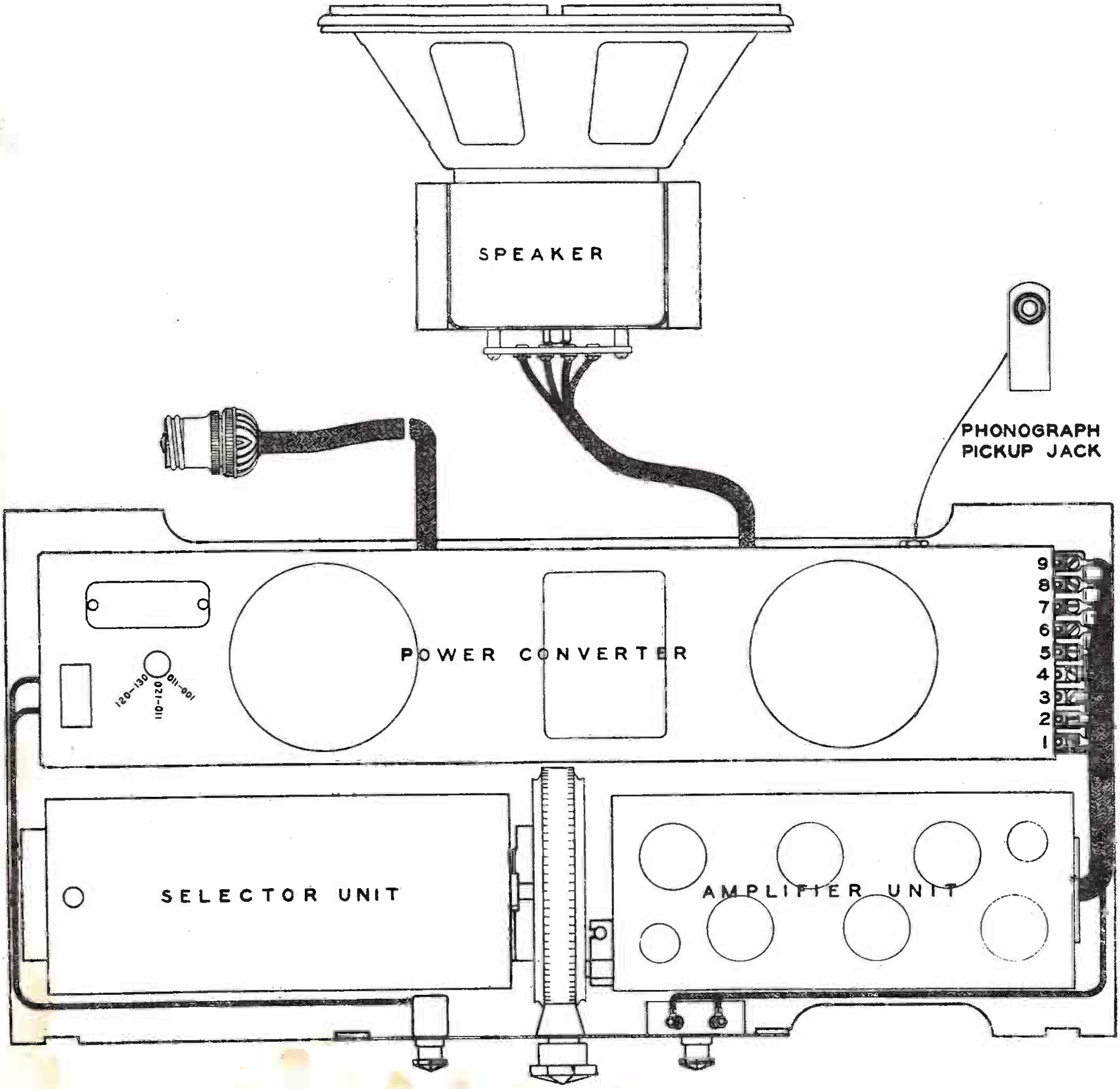

SPARKS WITHINGTON CO.

Sparton Equasonne Receiver, Model 930

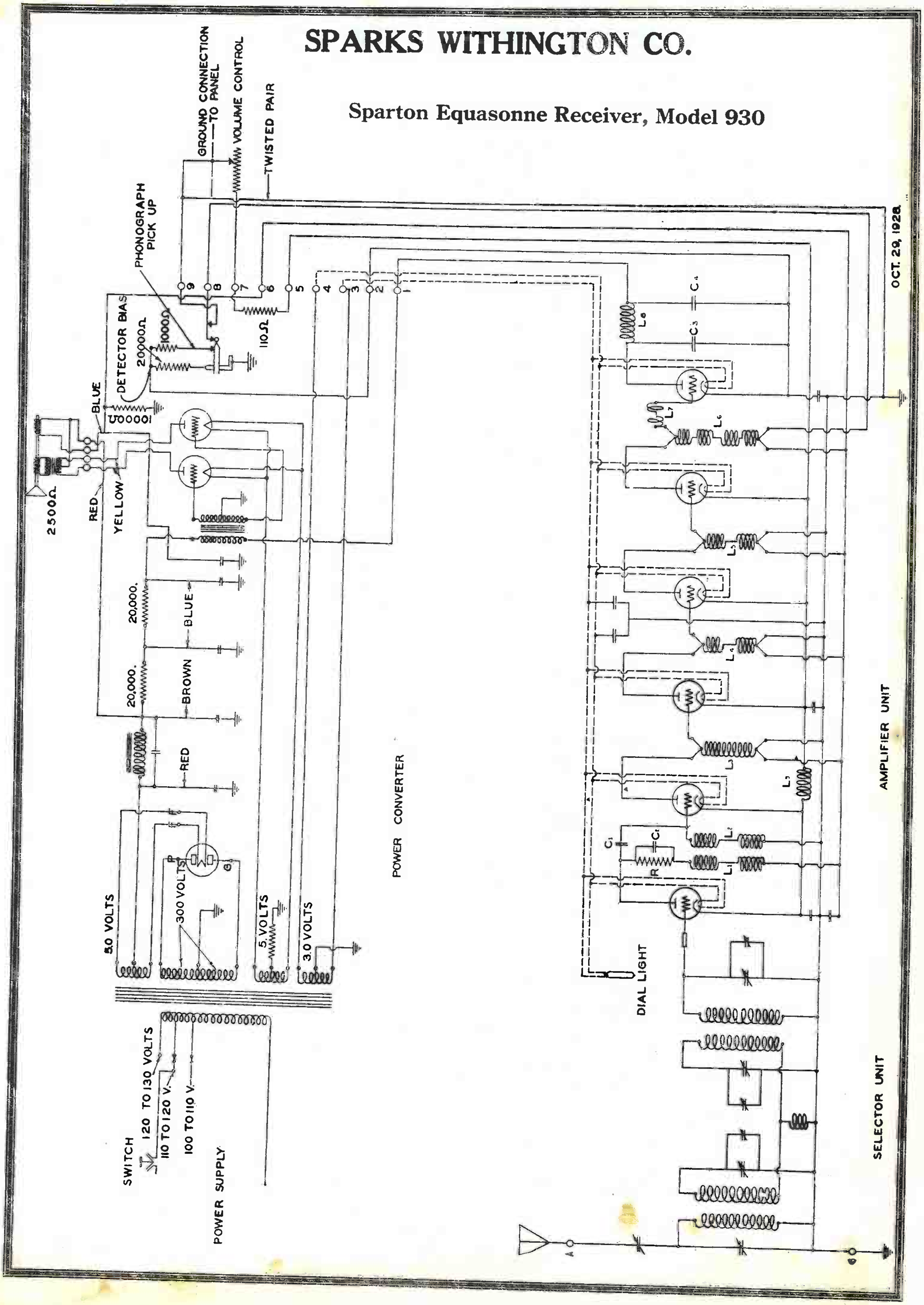

SPARKS WITHINGTON CO.

POLICE AUTOMOBILE RADIO RECEIVER
SPARTON MODEL 41 SCHEMATIC DIAGRAM

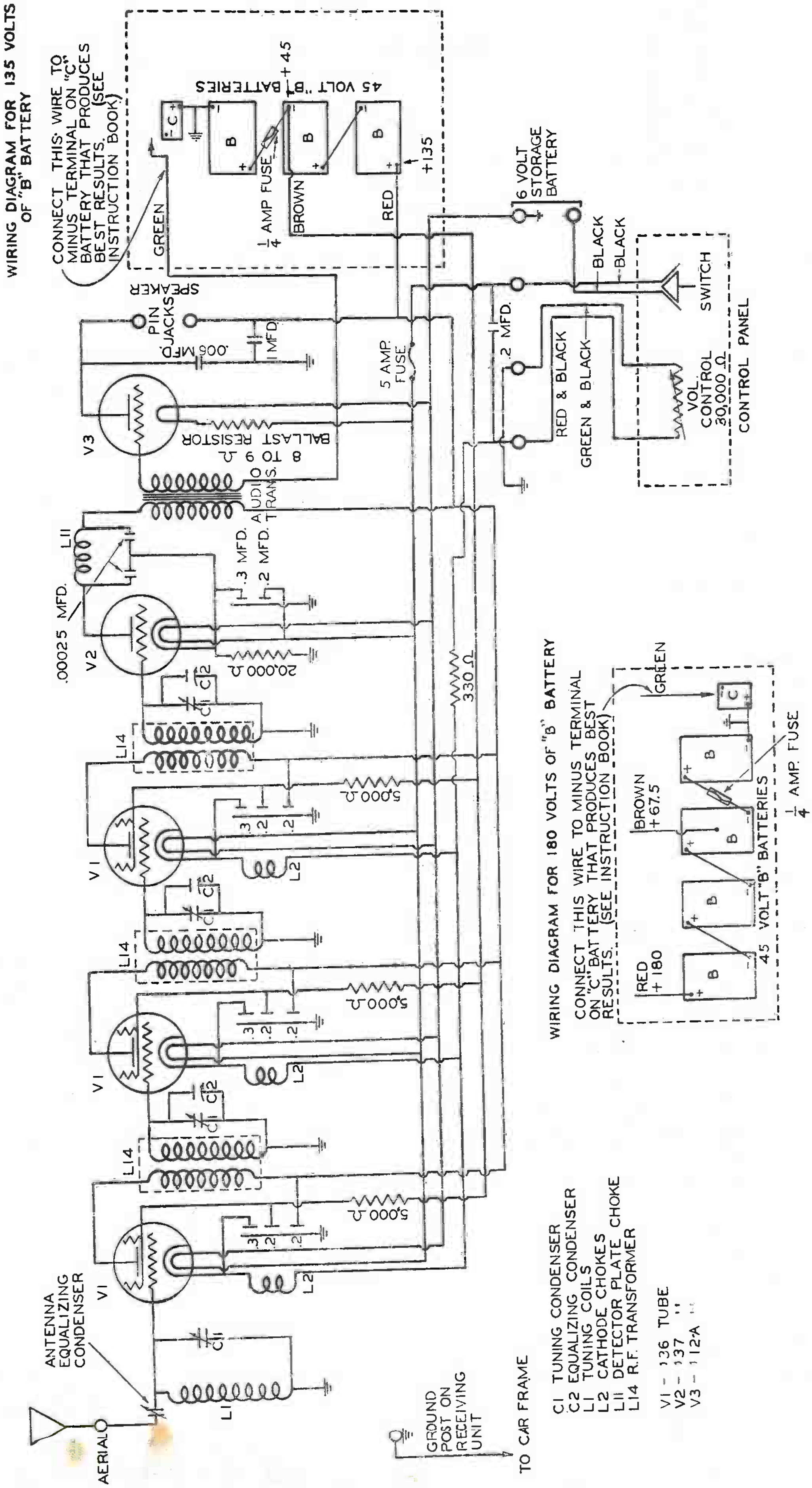

STROMBERG-CARLSON TELEPHONE MFG. CO.

Engineering Data
for
Stromberg-Carlson Nos. 38, 39, and 40
Radio Receivers

STROMBERG-CARLSON TELEPHONE MANUFACTURING COMPANY
Rochester, New York

ELECTRICAL SPECIFICATIONS

Type of Circuit	Superheterodyne
Type and Number of Tubes	4 No. 58, 2 No. 56, 2 No. 45, 1 No. 80
Voltage Rating	105–125 volts
Frequency Rating	60 cycles and 25-60 cycles
Power Consumption	110 watts
Undistorted Electrical Power Output of Chassis	3.2 watts

CIRCUIT DESCRIPTION

The four No. 58 triple-grid tubes are used as R. F. Amplifier, Mixer, I. F. Amplifier, and Demodulator-AVC. The two No. 56 tubes are used as Oscillator and First Audio Amplifier. The two No. 45 tubes are used in the push-pull output stage. The No. 80 is used as the rectifier in the power supply.

A Bi-resonator is used to couple the antenna to the R. F. amplifier to prevent any cross modulation. The R. F. amplifier is coupled to the mixer by an ordinary tuned R. F. transformer. This gives three tuning circuits (four gang tuning capacitor) for R. F. selectivity ahead of the mixer, thus the image response ratio is exceedingly high. The oscillator is coupled to the cathode circuit of the mixer tube in the regular manner. The I. F. output of the mixer tube is fed into a Tri-resonator (three tuned circuit transformer) and thence to the I. F. amplifier tube. This tube is coupled to the diode-triode demodulator-AVC tube by a single tuned circuit transformer.

The load resistor of the diode portion of the diode-triode forms the resistor unit of the first potentiometer of the dual volume control. The AVC voltage and the rectified audio signal are built up across this resistor. The AVC voltage is fed back to the grids of the first two tubes through a suitable filter. The audio voltage is applied to the control grid of the triode portion of this system through the movable contact of the potentiometer. The screen of the tube acts as the plate of the triode portion of the system, thus forming the triode audio amplifier in conjunction with the diode rectifier.

The output of this "plate" circuit is coupled to the second unit of the dual volume control which feeds the grid of the first audio tube. The output of this first audio stage is coupled to the push-pull output triodes. The Adjustable Automatic Clarifier system is connected across the primary of the push-pull input transformer. The output transformer feeds the signal from the power triodes to the high quality electro-dynamic speaker.

The power supply system employs two stages of filter; the first being of the resistance type, and the second using the field of the speaker as a choke. The plate supply for the output tubes is tapped off between these filter sections, while the remainder of the voltages are supplied from the voltage divider resistor.

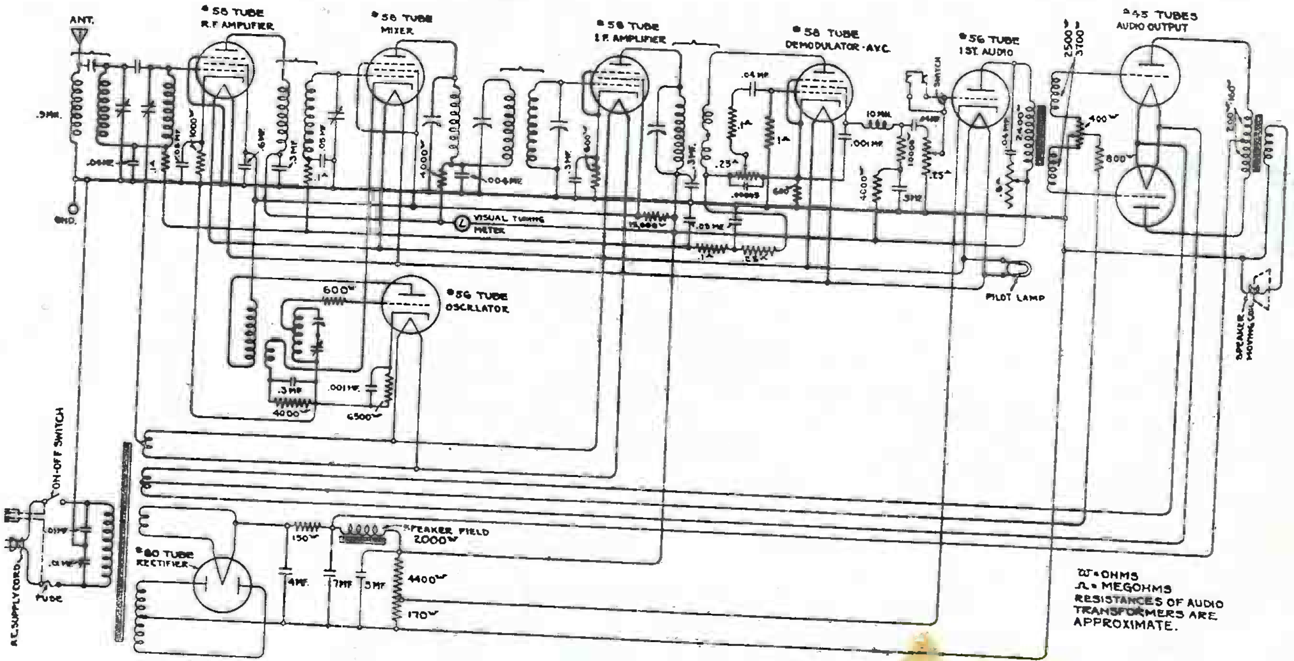

Fig. 1. Schematic Circuit of Nos. 38, 39, and 40 Receivers.

STROMBERG-CARLSON TELEPHONE MFG. CO.

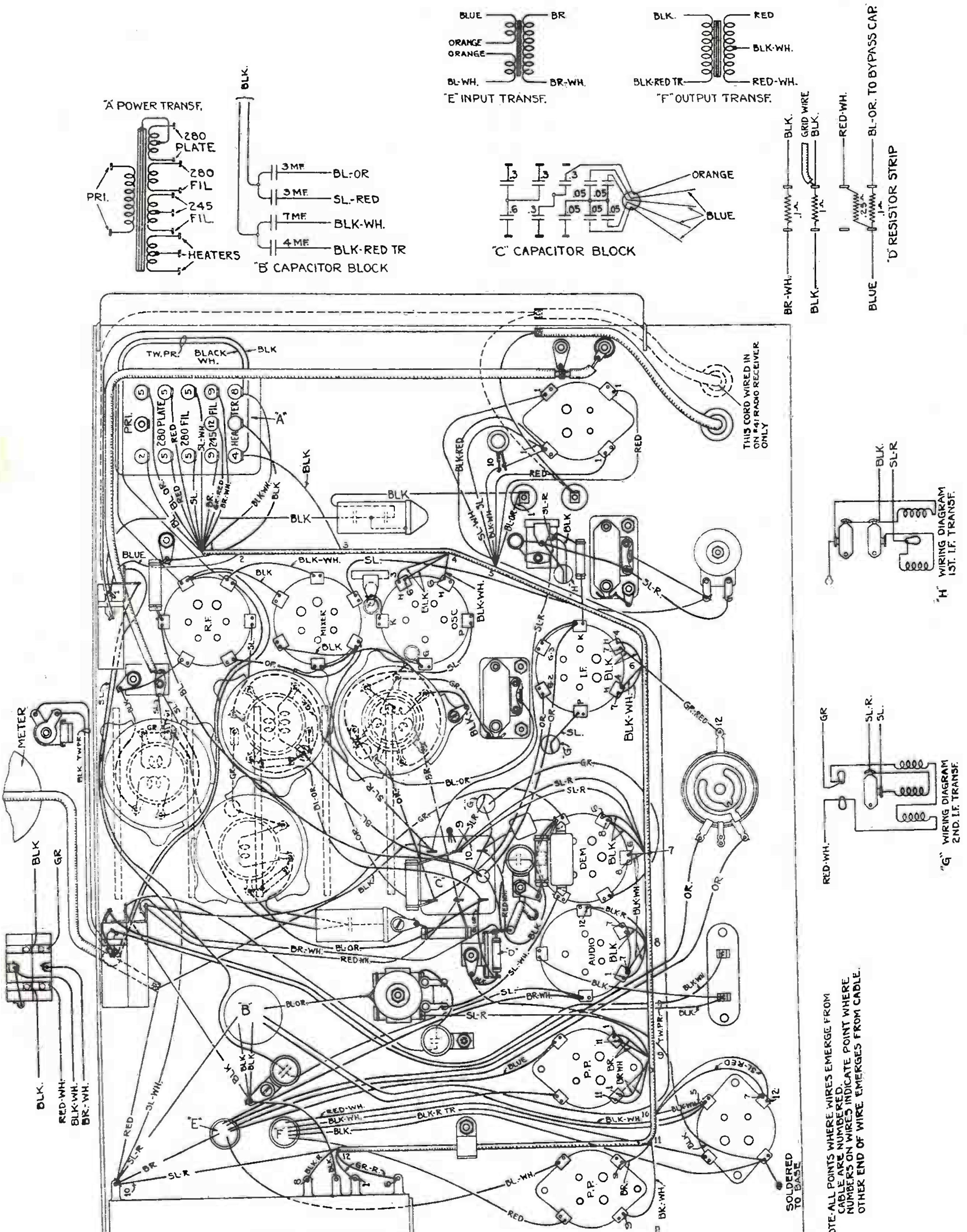

NOTE: ALL POINTS WHERE WIRES EMERGE FROM CABLE ARE NUMBERED. NUMBERS ON WIRES INDICATE POINT WHERE OTHER END OF WIRE EMERGES FROM CABLE.

Fig. 2. Wiring Diagram of Nos. 38, 39, and 40 Receivers.

STROMBERG-CARLSON TELEPHONE MFG. CO.

NORMAL VOLTAGE READINGS

These voltage readings correspond to a line voltage at 120 volts. When voltages are measured, proper allowances should be made for a difference in line voltage above or below 120 volts. Be sure to make these readings with the Meter and Scale indicated, otherwise the results will not agree with those tabulated. Alternating voltages are indicated in italics. The dial should be set at about 1000 kc.

Voltage	Meter	Scale	Where Measured	Appro. Value in Volts
Heater Voltages No. 56 and No. 58 Tubes	A. C.	0–4	Across Heater Terminals of Sockets	2.5
Filament Voltages No. 245 Tubes	A. C.	0–4	Across Filament Terminals of Audio Output Sockets	2.5
Filament Voltage No. 280 Tube	A. C.	0–8	Across Filament Terminals of No. 280 Rectifier Socket	5.
Plate Voltage Radio Amplifier Tube	D. C.	0–250	Between Plate Terminal of R. F. Amplifier Socket (+) and Chassis Base (–)	165
Plate Voltage Mixer Tube	D. C.	0–250	Between Plate Terminal of Mixer Socket (+) and Chassis Base (–)	150
Plate Voltage Oscillator Tube	D. C.	0–250	Between Plate Terminal of Oscillator Socket (+) and Chassis Base (–)	80
Plate Voltage I. F. Tube	D. C.	0–250	Between Plate Terminal of I. F. Socket (+) and Chassis Base (–)	170
Plate Voltage Demodulator Tube	D. C.	0–250	Between Plate Terminal and Demodulator Socket (+) and Chassis Base (–)	0
Plate Voltage First Audio Tube	D. C.	0–250	Between Plate Terminal of First Audio Socket (+) and Chassis Base (–)	160
Plate Voltages Audio Output Tubes	D. C.	0–250	Between Plate Terminals of Audio Output Sockets (+) and Chassis Base (–)	285
"C" Voltage R.F. Amplifier Tube	D. C.	0–10	Between Cathode Terminal of R. F. Amplifier Socket (+) and Chassis Base (–)	6
"C" Voltage Mixer Tube	D. C.	0–10	Between Cathode Terminal of Mixer Socket (+) and Chassis Base (–)	8
"C" Voltage Oscillator Tube	D. C.	0–250	Between Cathode Terminal of Oscillator Socket (+) and Chassis Base (–)	25
"C" Voltage I. F. Tube	D. C.	0–10	Between Cathode Terminal of I. F. Socket (+) and Chassis Base (–)	3
"C" Voltage Demodulator Tube	D. C.	0–10	Between Cathode Terminal of Demodulator (+) and Chassis Base (–)	2.5–3
"C" Voltage First Audio Tube	D. C.	0–10	Between Cathode Terminal of First Audio Socket (+) and Chassis Base (–)	6.5
"C" Voltage Audio Output Tube	D. C.	0–250	Across 750 ohm Biasing Resistor	47
Screen Voltages R. F. Mixer and I. F. Tubes	D. C.	0–250	Between Screen Terminals on Sockets (+) and Chassis Base (–)	85
"B" Voltage R. F. Mixer, I. F. First Audio and Demodulator Tube	D. C.	0–250	Between High Side of Voltage Divider (+) and Chassis Base (–)	160
"B" Voltage Audio Output Tubes	D. C.	0–750	Between Mid-Tap of Output Transformer (+) and Chassis Base (–)	300
Speaker Field Volts	D. C.	0–250	Across Small Pins on Speaker Connector Socket	125
Plate Voltage A. C. per Anode No. 280 Rectifier Tube	A. C.		Between Plate Terminals of No. 280 Rectifier Socket and Chassis Base	*340*

REPLACEMENT PARTS

Piece Number	Part	Description of Part	Required per Receiver	Price Each
P-22540	Audio Transformer Assembly	Input and Output Push-Pull Transformer	1	$ 5.50
P-21663	Bracket Assembly	Voltage Divider Mounting	1	.10
P-22353	Capacitor	Oscillator "Series Aligner"	1	.75
P-21334	Capacitor	.001 Mfd.	2	.55
P-22557	Capacitor	.004 Mfd.	1	.55
P-19597	Capacitor	.04 Mfd.	1	.55
P-21535	Capacitor	2—.01 Mfd.	1	.80
P-22411	Capacitor	.04 Mfd.	2	.65
P-22556	Capacitor	Aligner in Tri-Resonator	1	.55
P-22565	Capacitor Assembly	R. F. and I. F. By-Pass Capacitors	1	3.75
P-22544	Capacitor Assembly	Filter Capacitor Assembly	1	8.25
P-22549	Coil	Tri-Resonator Circuit and Demodulator Plate Circuit	2	.45
P-22358	Coil Assembly	First Coil of Bi-Resonator	1	1.50
P-22359	Coil Assembly	Second Coil of Bi-Resonator	1	1.75
P-22360	Coil Assembly	R. F. Transformer	1	2.50
P-22361	Coil Assembly	Oscillator Coil	1	2.50
P-21623	Coil Assembly	Antenna Inductor	1	.35
P-21566	Fuse	1.5 Amperes	1	.10
P-19630	Grid Clip		1	.10
P-21704	Grid Clip Assembly		2	.20
P-22532	I. F. Transformer	First I. F. Transformer	1	2.00
P-22533	I. F. Transformer	Second I. F. Transformer	1	2.50
P-21277	Knob	Antenna Aligner	1	.15
P-22390	Knob	Selector Knob	1	.25
P-22391	Knob	Volume Control and Clarifier Switch	2	.20
P-22351	Meter	Visual Tuning Meter (Weston No. 654)	1	4.00
P-19617	Potentiometer	Hum Adjuster	1	.85
P-22593	Potentiometer	Clarifier and On-Off Switch	1	1.75
P-22546	Potentiometer	Dual Volume Control and Phonograph Switch	1	3.25
P-22550	Resistor, 150 Ohms	Filter Resistor	1	.50
P-22596	Resistor, 5370 Ohms	Voltage Divider	1	2.00
P-21621	Resistor, 1,000 Ohms, "C" Type	Carbon Resistor, Brown, Black and Red	1	.35
P-22329	Resistor, 6,500 Ohms, "C" Type	Carbon Resistor, Blue, Green and Red	1	.35
P-22327	Resistor, 600 Ohms, "C" Type	Carbon Resistor, Blue, Black and Brown	3	.35
P-22328	Resistor, 4,000 Ohms, "C" Type	Carbon Resistor, Yellow, Black and Red	3	.35
P-22330	Resistor, 10,000 Ohms, "C" Type	Carbon Resistor, Brown, Black and Orange	1	.35
P-22331	Resistor, 15,000 Ohms, "C" Type	Carbon Resistor, Brown, Green and Orange	1	.35
P-22333	Resistor, 100,000 Ohms, "D" Type	Carbon Resistor, Brown, Black and Yellow	4	.35
P-22334	Resistor, 250,000 Ohms, "D" Type	Carbon Resistor, Red, Green and Yellow	1	.35
P-22561	Resistor, 1 Megohm, "D" Type	Carbon Resistor, Brown, Black and Green	1	.35
P-21280	4 Pin Socket		4	.15
P-22570	5 Pin Socket		2	.15
P-22571	6 Pin Socket		4	.15
P-22529	Transformer	Power, 60 Cycle, 110 Volts	1	7.50
P-22530	Transformer	Power, 25-60 Cycles, 110 Volts	1	12.00

STROMBERG-CARLSON TELEPHONE MFG. CO.

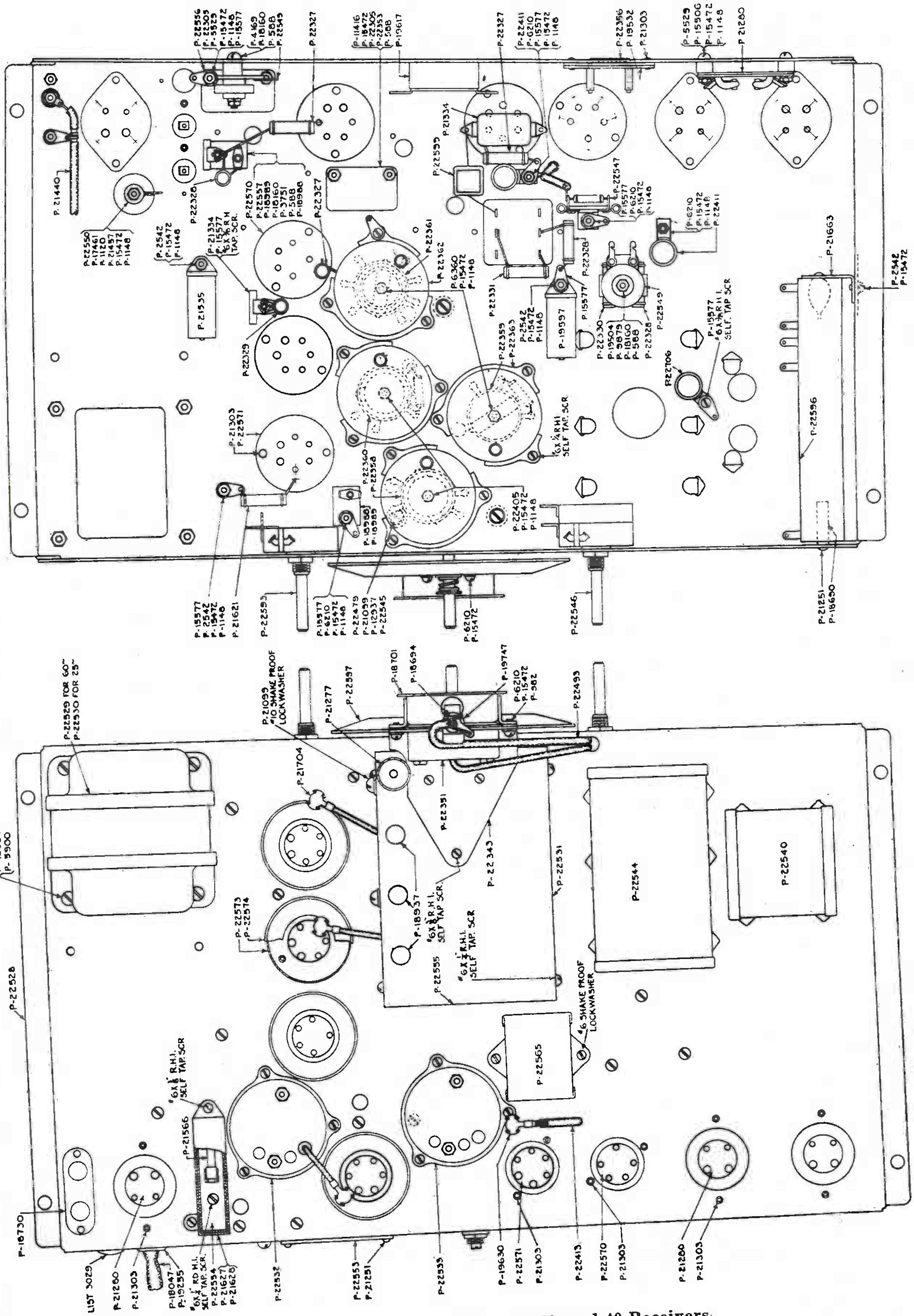

Fig. 3. Chassis Assembly of Nos. 38, 39, and 40 Receivers.

STROMBERG-CARLSON TELEPHONE MFG. CO.

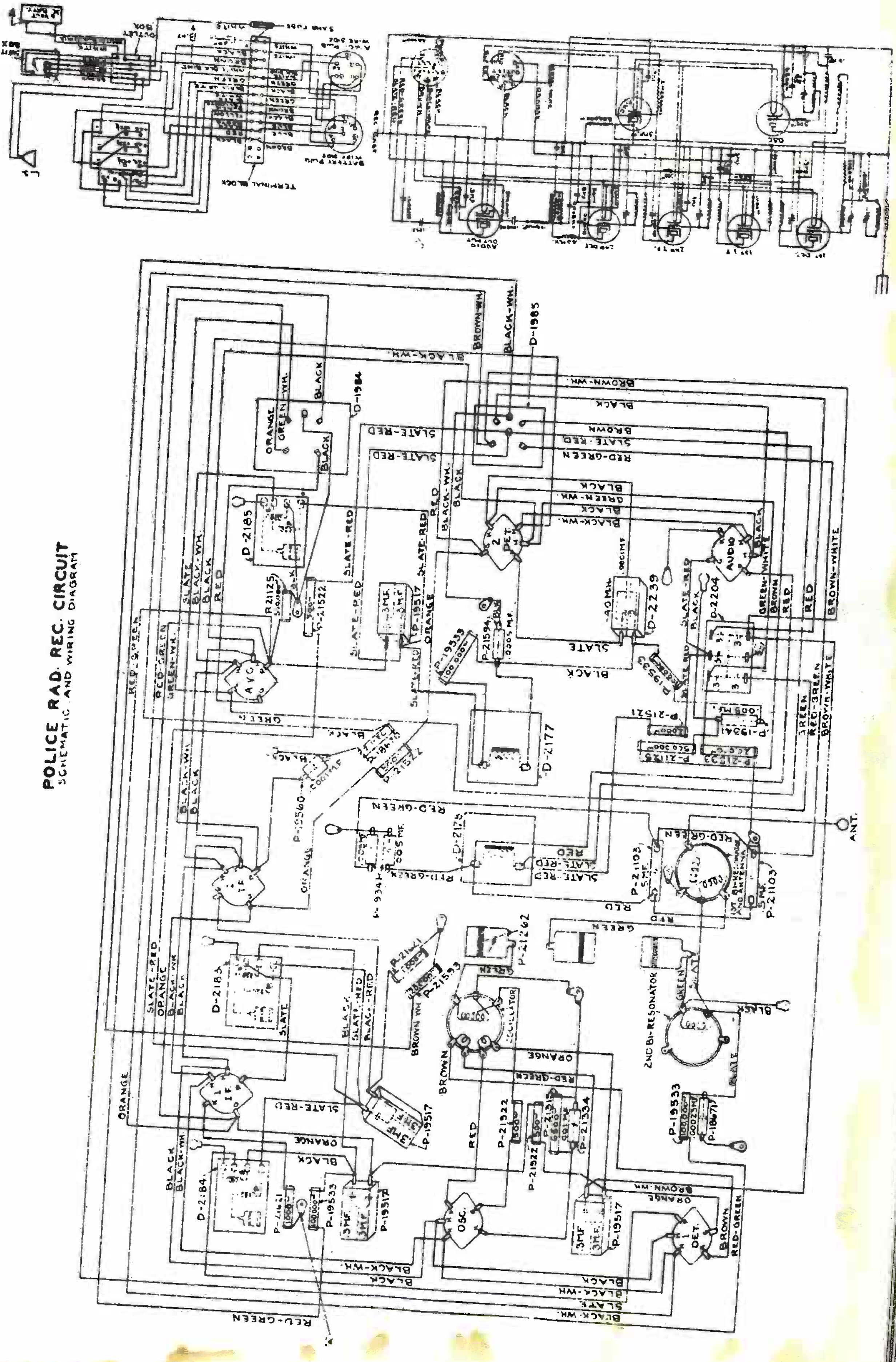

POLICE RAD. REC. CIRCUIT
SCHEMATIC AND WIRING DIAGRAM

STROMBERG-CARLSON TELEPHONE MFG. CO.

TUBE AND ALIGHING LOCATIONS FOR STROMBERG-CARLSON AUTOMOBILE POLICE RECEIVER

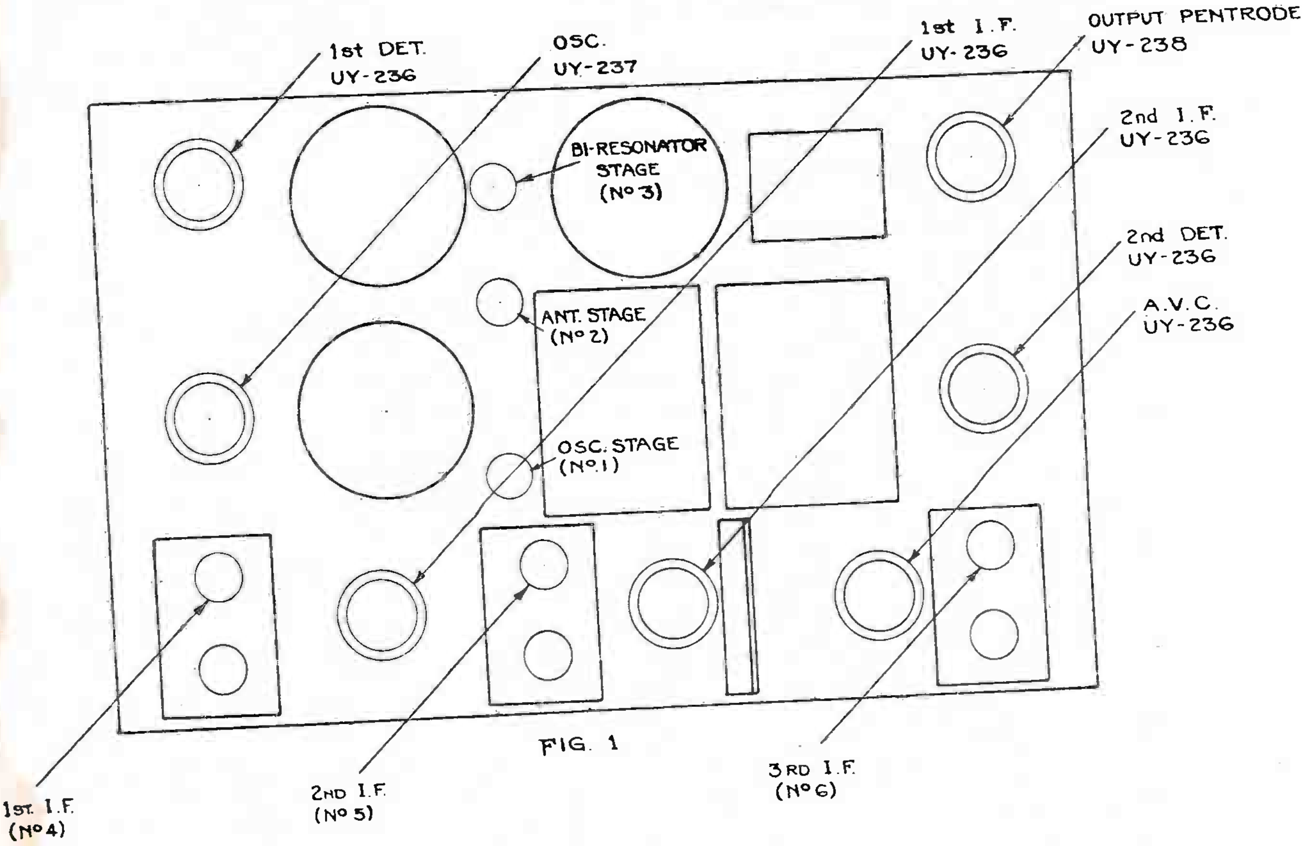

FIG. 1

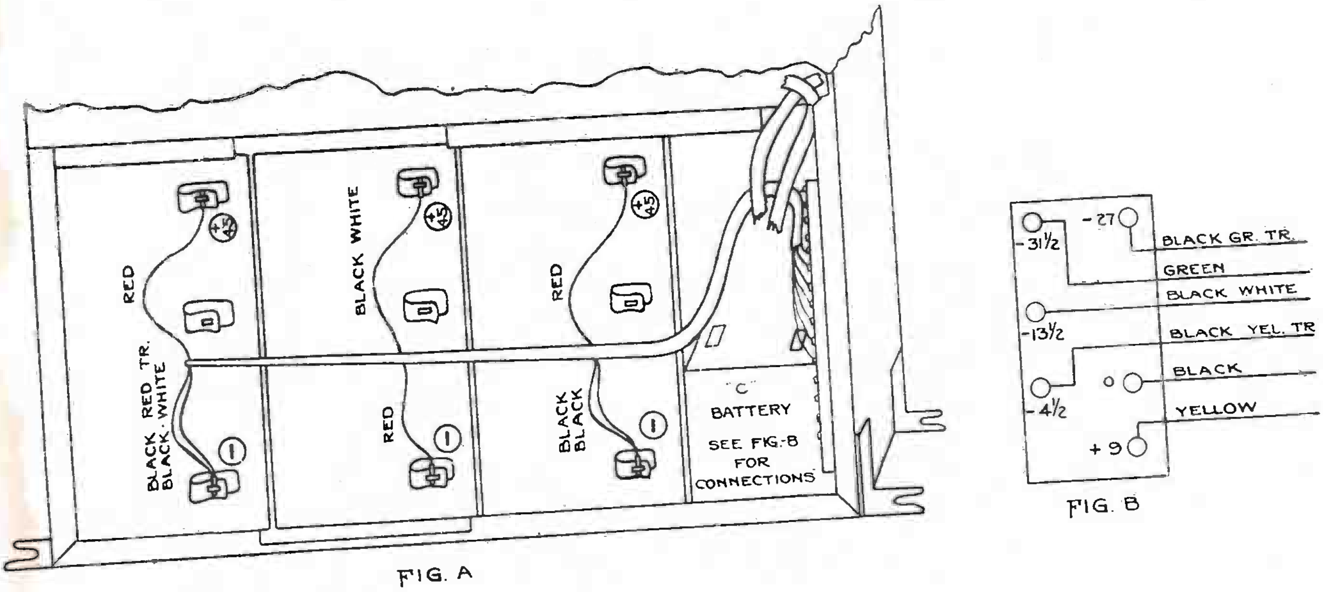

FIG. A

FIG. B

FIG. 2 DRY CELL CONNECTIONS

STROMBERG-CARLSON TELEPHONE MFG. CO.

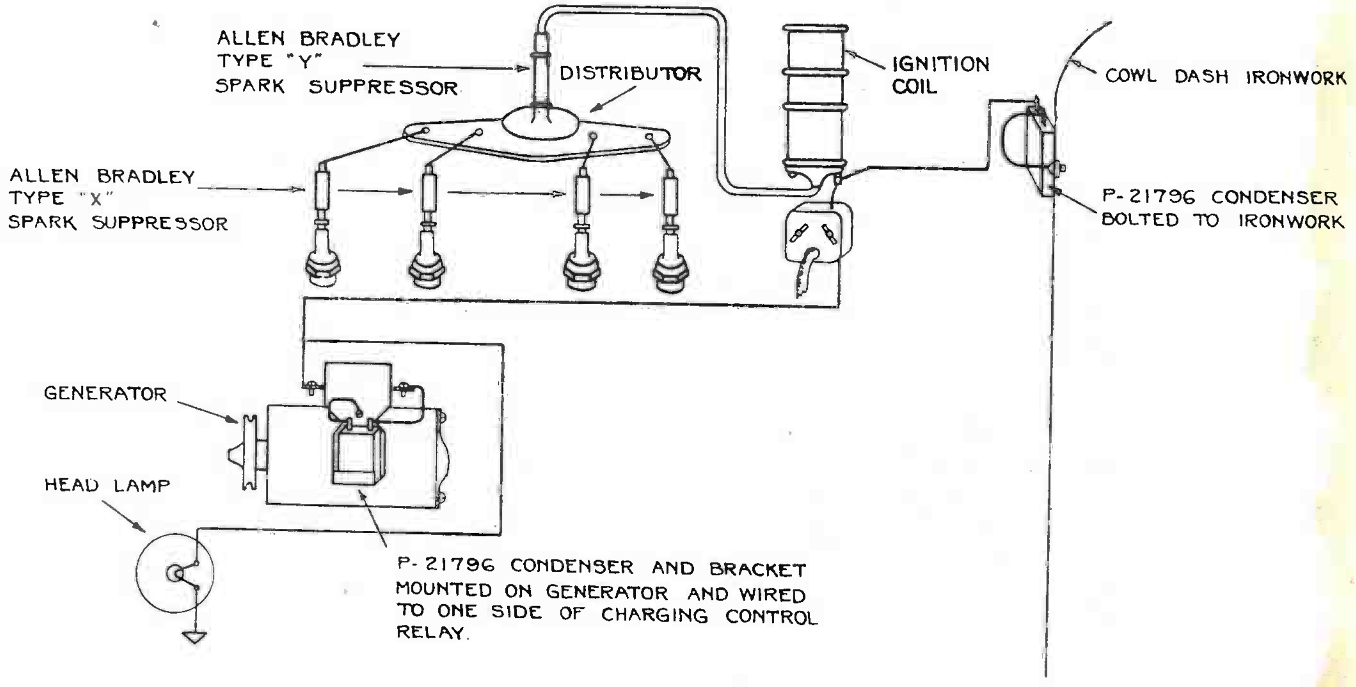

FIG. 3 WIRING AND EQUIPMENT FOR SPARK AND GENERATOR NOISE SUPPRESSION ALSO SEE FIG. 4

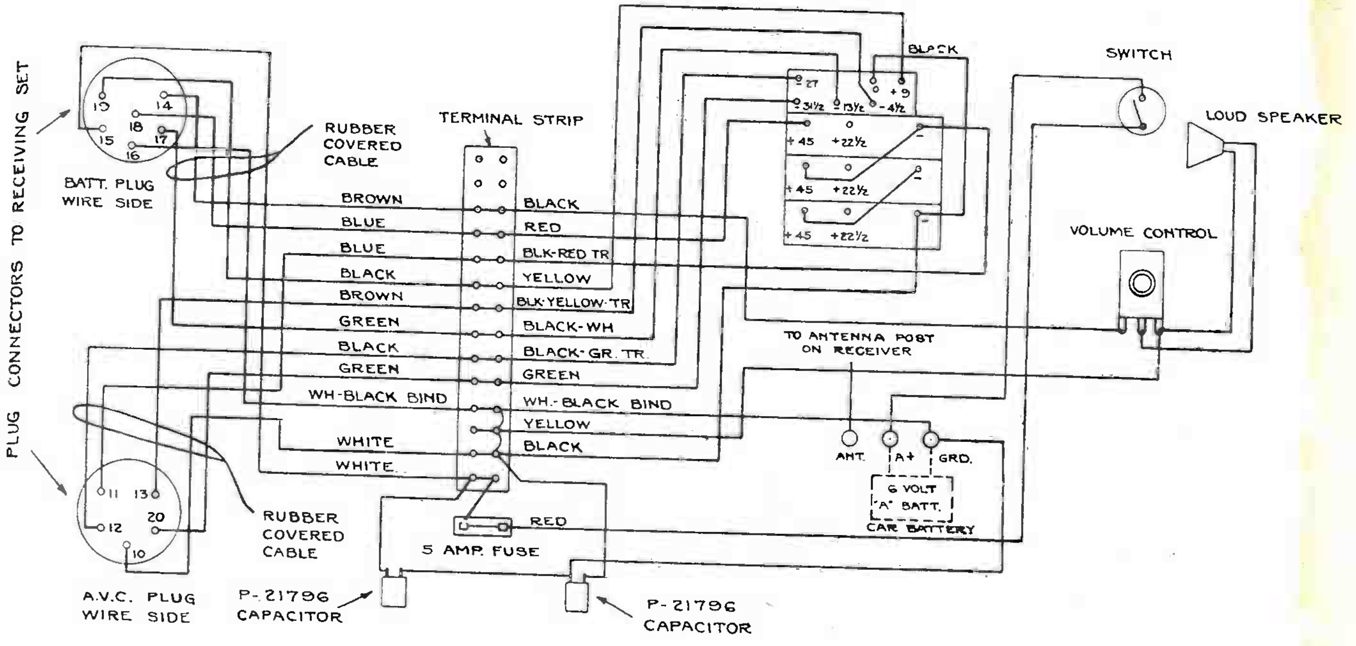

FIG. 4 WIRING CONNECTIONS AT TERMINAL STRIP DRY CELL BATTERIES, ETC.

TRANSFORMER CORPORATION OF AMERICA

MODELS 84 AND 85
SUPERHETERODYNE CLARION RADIO

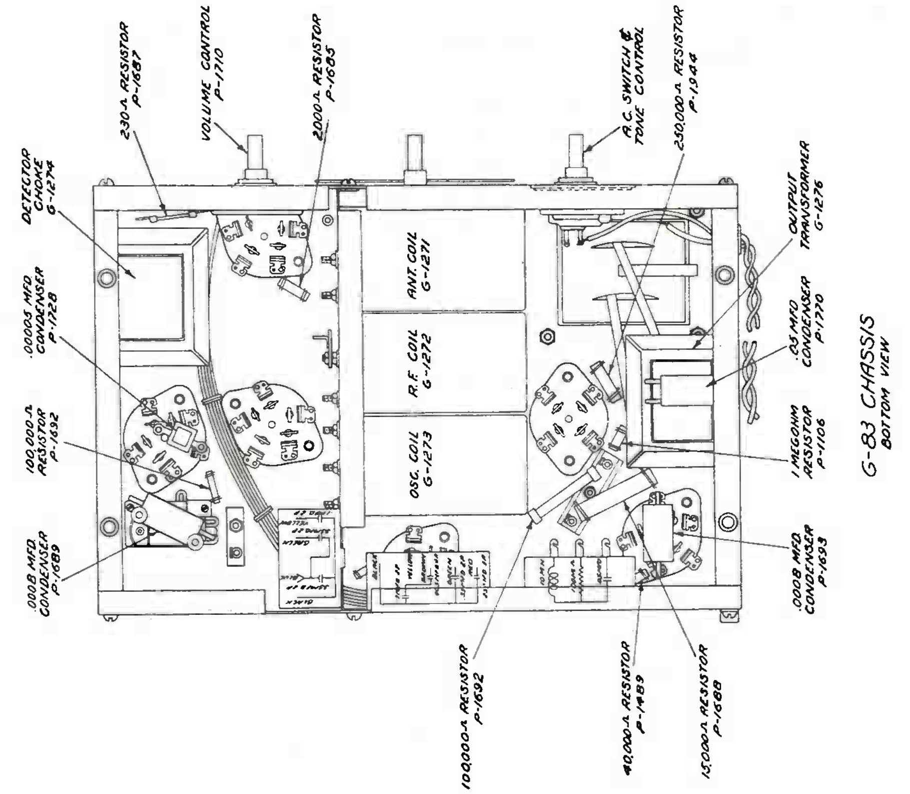

G-83 CHASSIS
BOTTOM VIEW

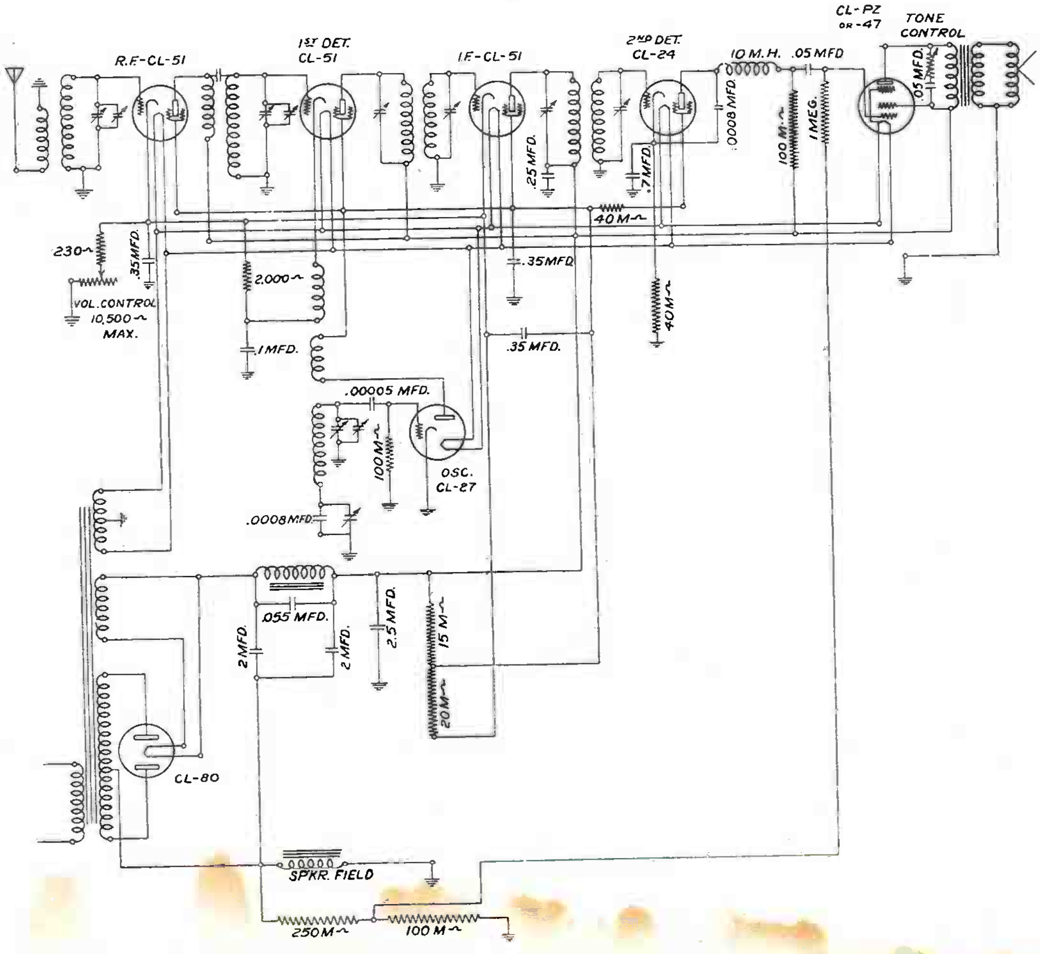

TRANSFORMER CORPORATION OF AMERICA

CONTINUITY TEST TABLES
USING 10 VOLT SCALE 1000 OHM VOLT METER AND SIX VOLT BATTERY

Circuit Tested	From	To	Readings	Your Reading
Antenna Pri.	Antenna post	Ground	6.	
R. F. Grid	Grid clip	Ground	6.	
R. F. Cathode	Rect. fil. prong	R. F. Cath. prong	1.4	
R. F. Screen	Rect. fil. prong	R. F. Screen prong	2.5	
R. F. Plate	Rect. fil. prong	R. F. Plate prong	5.6	
1st Det. grid	Grid cap clip, 1st det.	Ground	6.0	
1st Det. Cath.	Rect. fil. prong	1st Det. Cath. prong	1.4	
1st Det. screen	Rect. fil. prong	1st Det. screen prong	2.5	
1st Det. plate	Rect. fil. prong	1st. Det. plate prong	5.6	
I. F. Grid	I. F. Grid clip	Ground	6.0	
I. F. Cath.	Rect. fil. prong	I. F. Cath. prong	1.4	
I. F. Screen	Rect. fil. prong	I. F. Screen prong	2.5	
I. F. Plate	Rect. fil. prong	I. F. Plate prong	5.6	
2nd Det. grid	2nd Det. grid clip	Ground	6.0	
2nd Det. cath.	Rect. fil. prong	2nd Det. cath. prong	1.4	
2nd Det. screen	Rect. fil. prong	2nd Det. screen prong	.7	
2nd Det. plate	Rect. fil. prong	2nd Det. plate prong	.5	
Pent. cont. grid	Rect. fil. prong	Pent. cont. grid prong	.1	
Pent. S. C. Grid	Rect. fil. prong	Pent. S. C. grid prong	5.7	
Pent. plate	Rect. fil. prong	Pent. plate prong	5.6	
Osc. grid	Osc. grid prong	Ground	.5	
Osc. pick up coil	Green lead on .00005 cond.	Black lead on padding cond.	6.0	
Osc. Plate	Rect. fil. prong	Osc. Plate prong	2.5	
Osc. cath.	Rect. fil. prong	Osc. cathode prong	1.4	
Power trans. pri.	ACROSS	A. C. Plug	6.	
Power trans. sec.	Plate to plate	Rect. socket	5.7	
Output trans. sec.	Black and green leads in cable	Spkr. disconnected	6.	
Voice coil disconnected	V. C. green lead	V. C. Yellow lead	6.	
Speaker field	Field, red lead	Field, green lead	5.6	
Osc. tuning Ckt.	Green lead on .00005 cond.	Black lead on padding cond.	6.	

READINGS TAKEN WITH WESTON MODEL 565 ANALYSER

No.	Stage	Type Tube	A Volts	B Volts	Cont. Grid Volts	Cath. Volts	Ip' Norm.	SG Volts
1	r. f.	51	2.1	255	3.5	3.5	3.5	78
2	1st Det.	51	2.1	240	10.	10.	2.	108
3	Osc.	27	2.1	135	0	0	6.	0
4	I. F.	51	2.1	250	3.5	3.5	3.5	77
5	2nd det.	24	2.2	190	6.0	6.0	.2	68
6	Output	47	2.2	228	14.	0	25.	255
7	Rect.	80	4.4		0	0		0

Volume control position **Full** Line Voltage **115**

Note: Since resistance tolerances in the sets are plus or minus 10%, and tubes may vary over 20%, your readings may disagree with the above by plus or minus 30%. PZ is also known as 47, the latter being the final type number.

TRANSFORMER CORPORATION OF AMERICA

RESISTANCE TABLE

(Using 10 volt range meter 1000 ohms per volt and 6 volt battery)

Item Tested	Description Color—Code	From	To	Reads	Your Reading	Ohms Resistance
r. f.-grid. bias resist.	Black Strap type Wire wound	r. f. cath. prong	Vol. cont. ungrounded terminal	5.9		230
Volume control	Variable at max. resistance	Test between its two terminals (connected)		3.2		Max. 10,500
1st det. grid bias resist.	Red Black tip	r. f. cath. prong	Other end of resist.	5.1		2,000
Tone control resistance in.	On front panel	Across tone control		2.8		100,000
2nd Det. Screen	Yellow Orange spot Black tip	Across resistor		1.1		40,000
Oscillator grid-resist.	Brown Yellow spot Black tip	Oscillator grid prong	Ground	0.6		100,000
I. f. and r. f. cathode-bias resist.	Red Orange spot Black tip	I. f. cath. prong	I. f.-screen grid prong	2.3		20,000
I. f. and det. screen grid volts resist.	Brown Orange spot Green tip	I. f. screen grid prong	Pentode space charge grid prong	2.7		15,000
2nd det. grid-bias resist.	Yellow Orange spot Black tip	2nd det. cath. prong	Ground	1.1		40,000
2nd det. plate resist.	Inside—3 term. det. plate filter assem.	Test between solder lugs on det. plate-filter assem. where red wires attach.		0.6		100,000 in series with 10 m.h. choke
Pentode grid-resist.	Brown Green spot Black tip	Pentode Grid prong	Across resistor	0.5		1 Meg.
Pentode grid-bias	Brown Yellow tip Black spot	Across resistor		.6		100,000
Bias dividing resistor	Red Green tip Yellow spot	Across resistor		.5		250,000

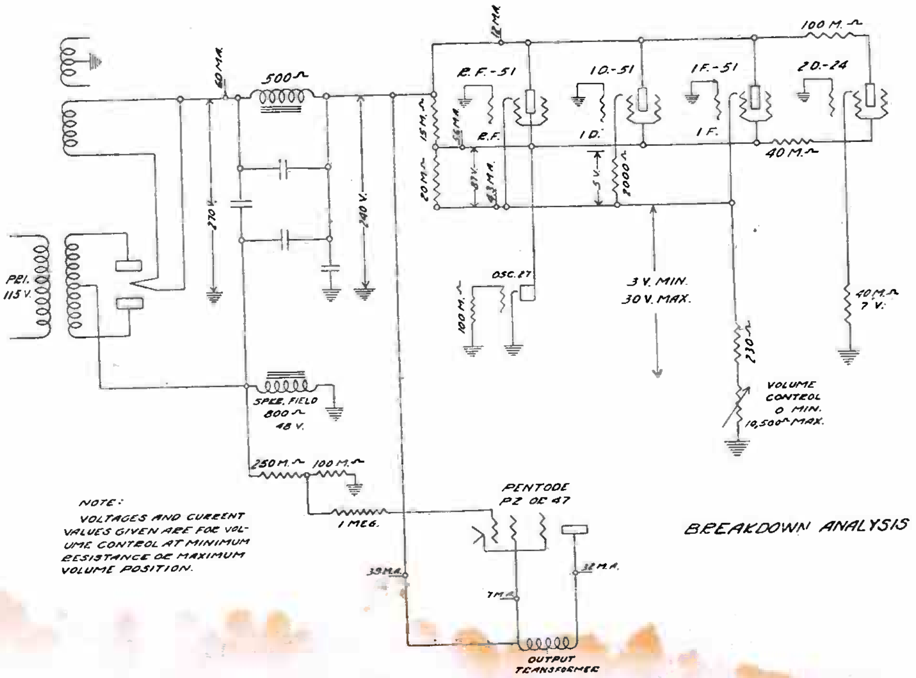

TRANSFORMER CORPORATION OF AMERICA
SERIES 100 SUPERHETERODYNE CLARION RADIO

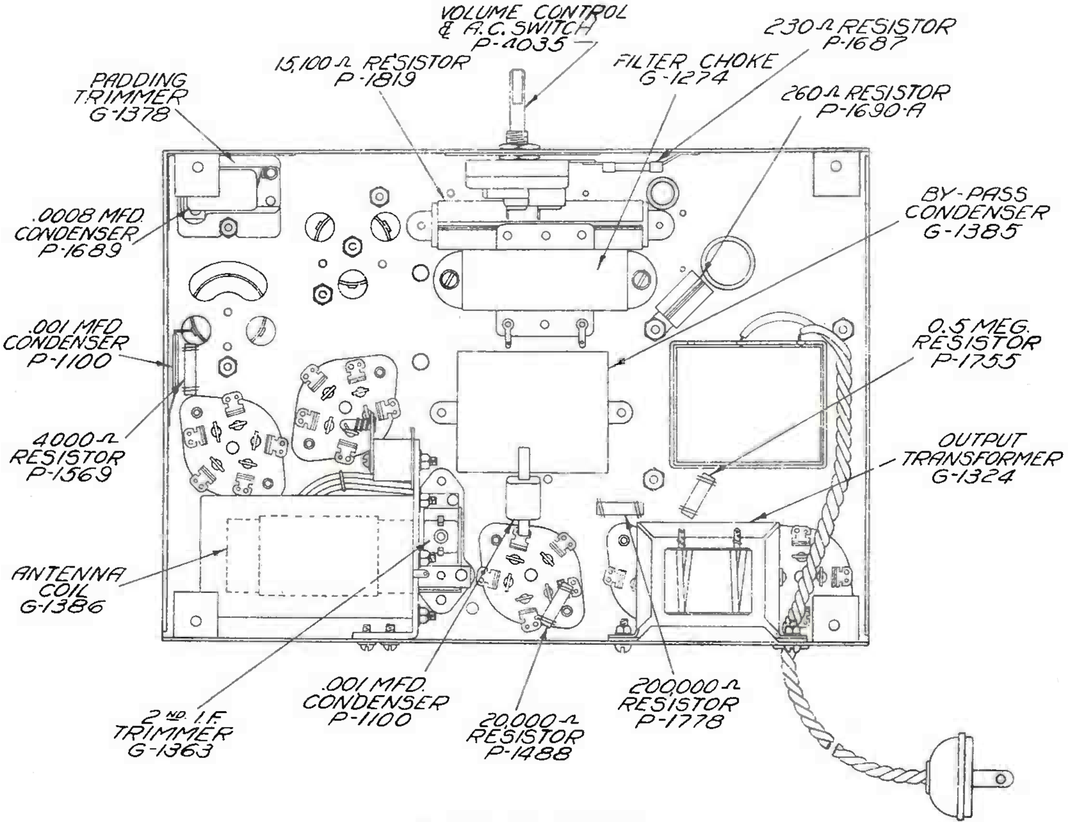

G-100 CHASSIS
BOTTOM VIEW

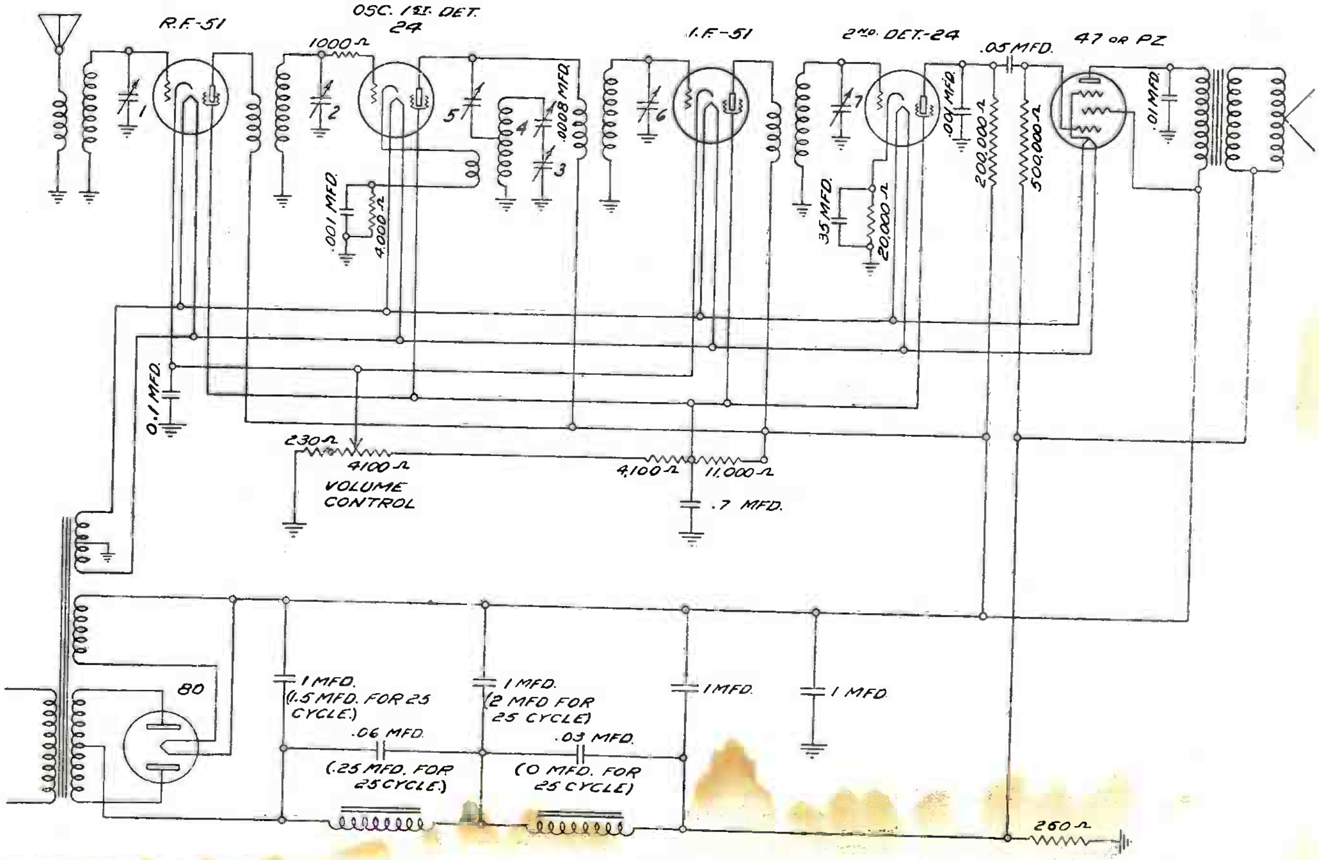

TRANSFORMER CORPORATION OF AMERICA

CONTINUITY TEST TABLES

Using 10 Volt Scale 1000 Ohm Per Volt Meter and 4½ Volt Battery

Circuit Tested	From	To	Readings	Your Readings
R. F. Grid	Rect. Fil. Prong	R. F. Grid Clip	1.5	
R. F. Screen	Rect. Fil. Prong	R. F. Screen Prong	2.2	
R. F. Plate	Rect. Fil. Prong	R. F. Plate Prong	4.4	
R. F. Cathode	Rect. Fil. Prong	R. F. Cathode Prong	1.5	
Autodyne Grid	Rect. Fil. Prong	Autodyne Grid Clip	1.5	
Autodyne Screen	Rect. Fil. Prong	Autodyne Screen Prg.	2.2	
Autodyne Plate	Rect. Fil. Prong	Autodyne Plate Prg.	4.5	
Autodyne Cathode	Rect. Fil. Prong	Autodyne Cath. Prg.	1.3	
I. F. Grid	Rect. Fil. Prong	I. F. Grid Clip	1.5	
I. F. Screen	Rect. Fil. Prong	I. F. Screen Prong	2.2	
I. F. Plate	Rect. Fil. Prong	I. F. Plate Prong	4.4	
I. F. Cathode	Rect. Fil. Prong	I. F. Cathode Prong	1.5	
2nd Det. Grid	Rect. Fil. Prong	2nd Det. Grid Clip	1.5	
2nd Det. Screen	Rect. Fil. Prong	2nd Det. Screen Prg.	2.2	
2nd Det. Plate	Rect. Fil. Prong	2nd Det. Plate Prong	.2	
2nd Det. Cathode	Rect. Fil. Prong	2nd Det. Cath. Prong	.8	
Pent. Cont. Grid	Rect. Fil. Prong	Pent. C. G. Prong	.1	
Pent. Plate	Rect. Fil. Prong	Pent. Plate Prong	4.4	
Pent. S. C. Grid	Rect. Fil. Prong	Pent. S. C. Grid Prg.	4.5	
Ant. Pri.	Antenna Post	Gnd. Post	4.5	
Pwr. Trans. Pri.	Across	A. C. Plug	4.5	
Pwr. Trans. Sec.	Across	Rect. Plates	4.3	
Spkr. Field	Red Lead Cable	Black Lead Cable	4.2	
Spkr. V. C.	Green Lead Cable	Black Lead Cable	4.5	

READING TAKEN WITH WESTON MODEL 565 ANALYZER

MODEL No. CUSTOMER BY

No.	Stage	Type Tube	"A" Volts	"B" Volts	Cont. Grid Volt	Cath. Volts	S. G. Volts	Ip Norm.
1	R. F.	51	2.15	235	2.4	2.5	80.	5.0
2	Autodyne	24	2.15	225	5.0	6.0	75.	3.0
3	I. F.	51	2.15	230	2.4	2.5	75.	4.0
4	2nd Det.	24	2.15	104	10.	15.	65.	0.6
5	Audio	47	2.25	250	16	0	260	30.
6	Rect.	80	4.4					57.5

Line Voltage 115. Order of Test: 1 Rect., 2 Power, 3 Det., Etc.
Volume Control Position, Full On.

NOTE: Since resistance tolerances in the sets are plus or minus 10% and tubes may vary over 20%, your readings may disagree with the above by plus or minus 30%.

TRANSFORMER CORPORATION OF AMERICA

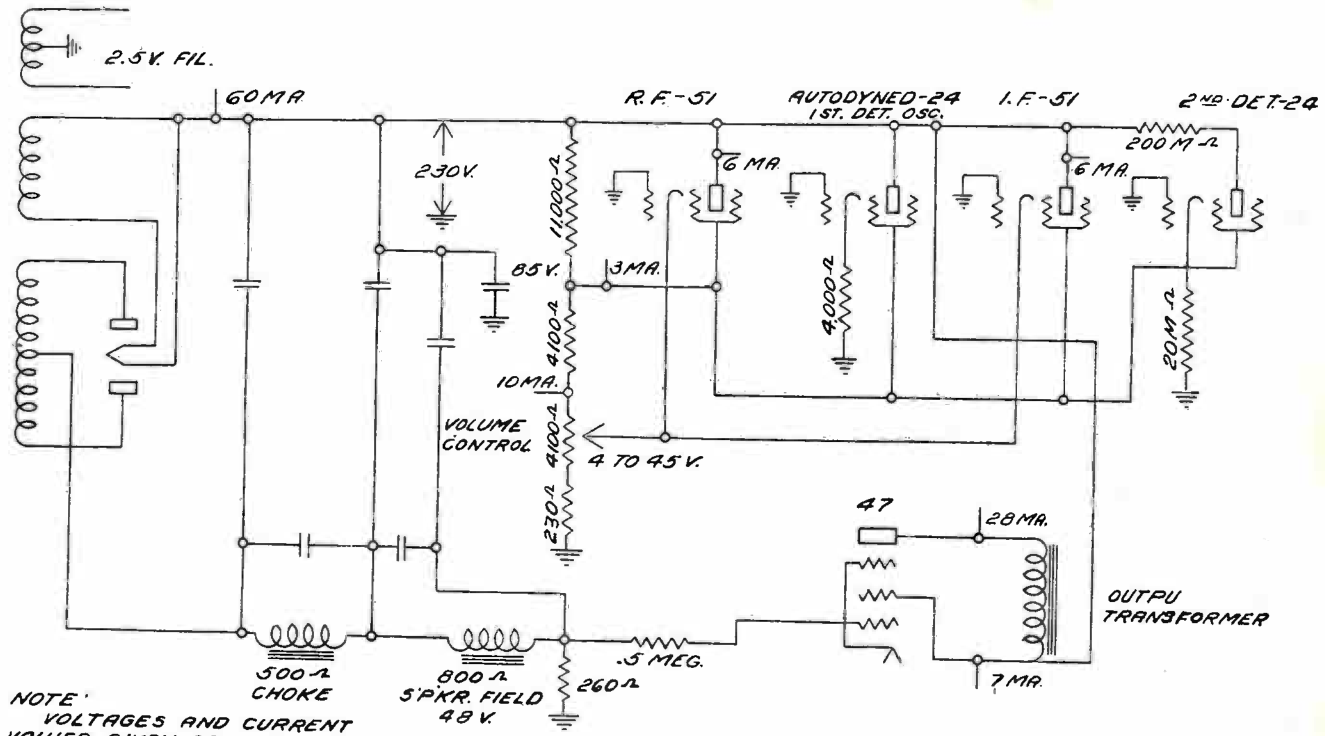

NOTE:
VOLTAGES AND CURRENT VALUES GIVEN ARE FOR VOLUME CONTROL AT MINIMUM RESISTANCE OR MAXIMUM VOLUME POSITION.

BREAKDOWN ANALYSIS
FOR
CLARION MODEL-100

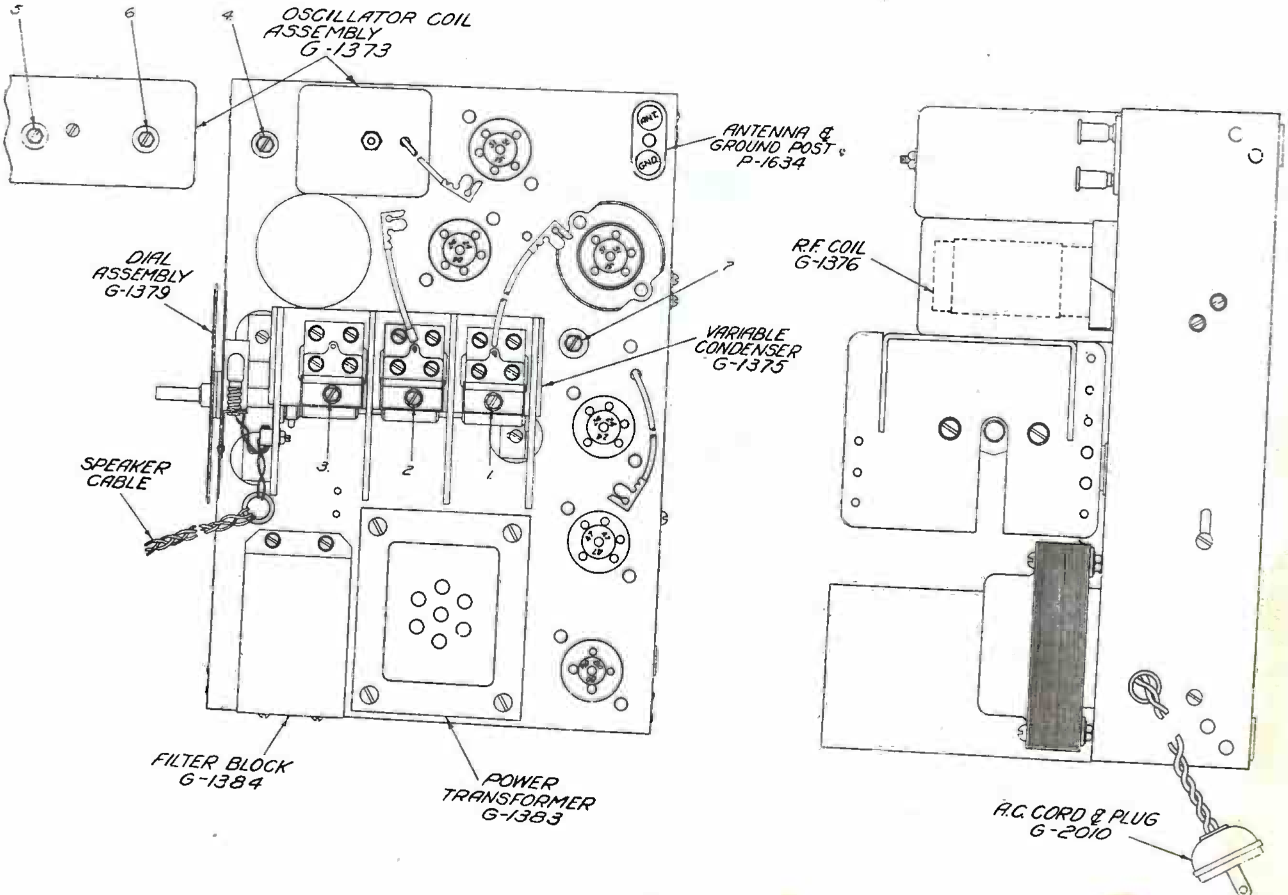

G-100 CHASSIS

TRANSFORMER CORPORATION OF AMERICA

Series 120, Seven Tube Superheterodyne

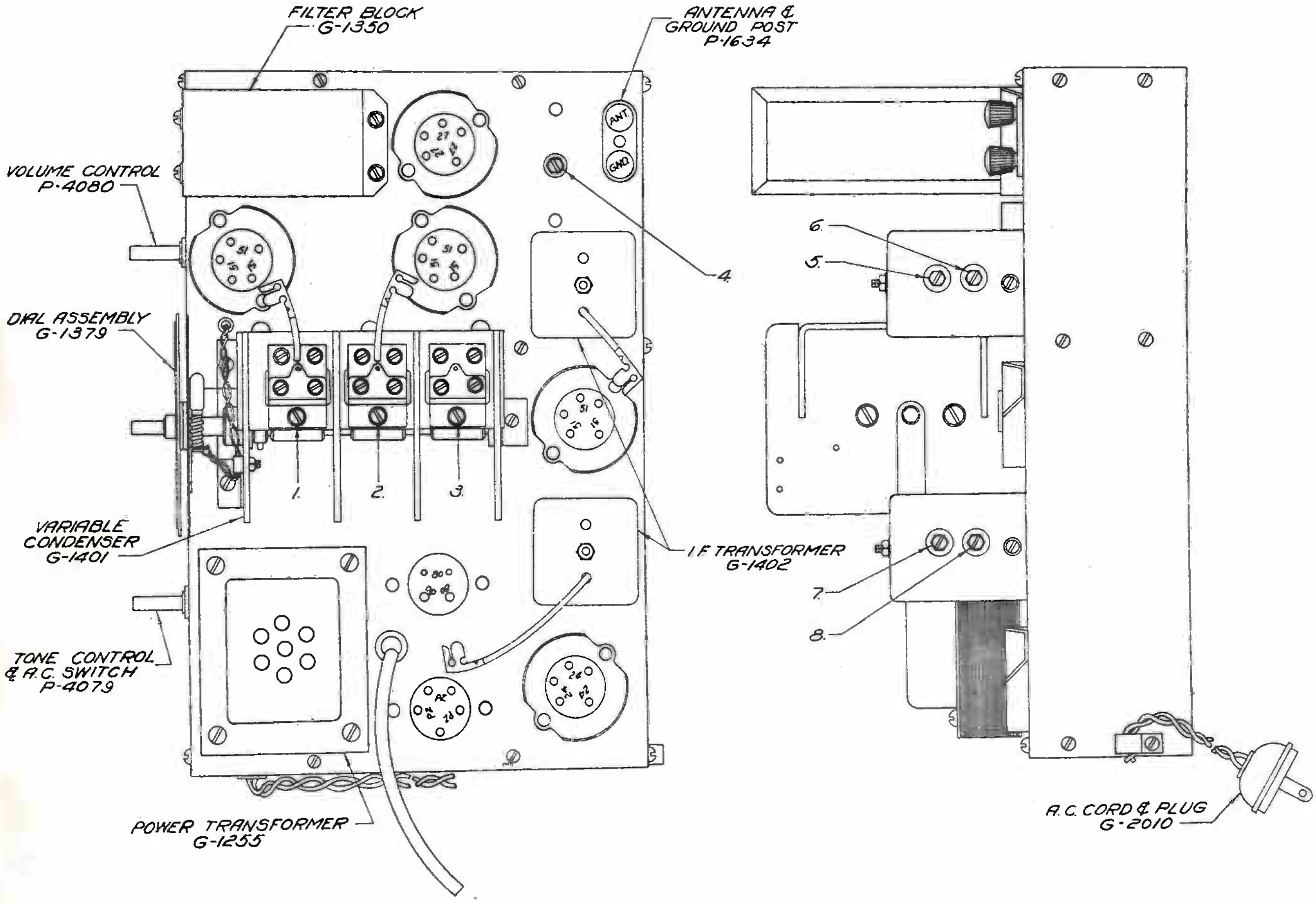

G-120 CHASSIS

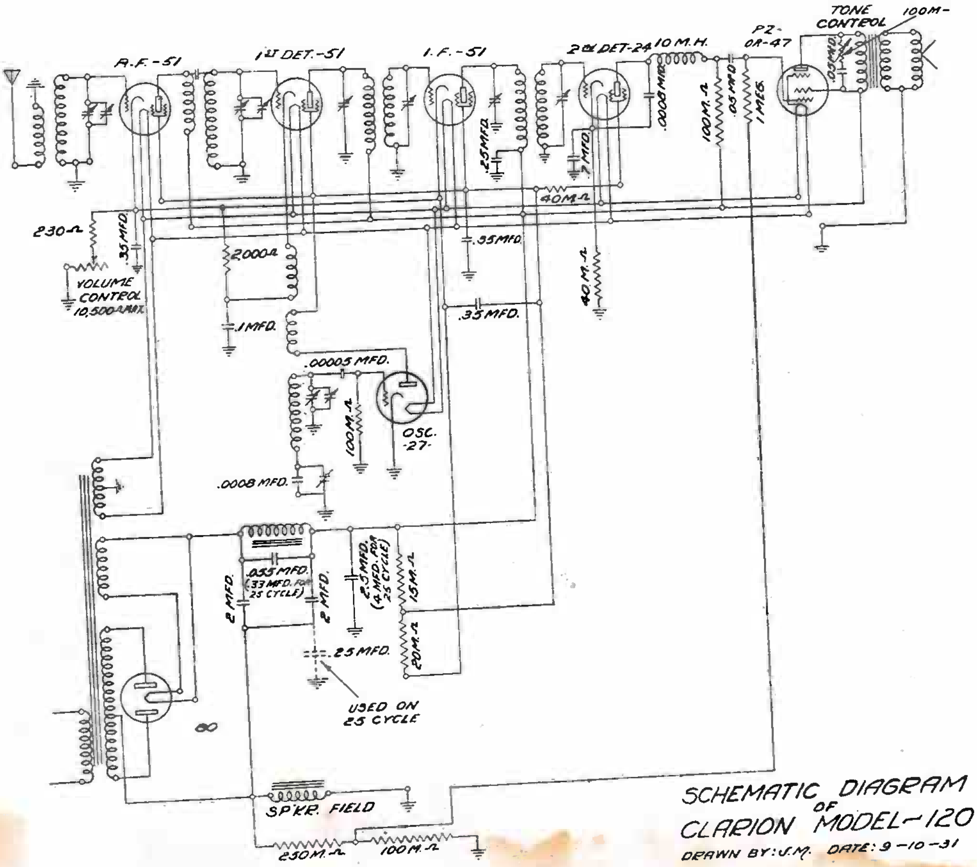

SCHEMATIC DIAGRAM OF CLARION MODEL-120
DRAWN BY: J.M. DATE: 9-10-31

TRANSFORMER CORPORATION OF AMERICA
MODELS AC-260 AND 25-260
SUPERHETERODYNE CLARION RADIO

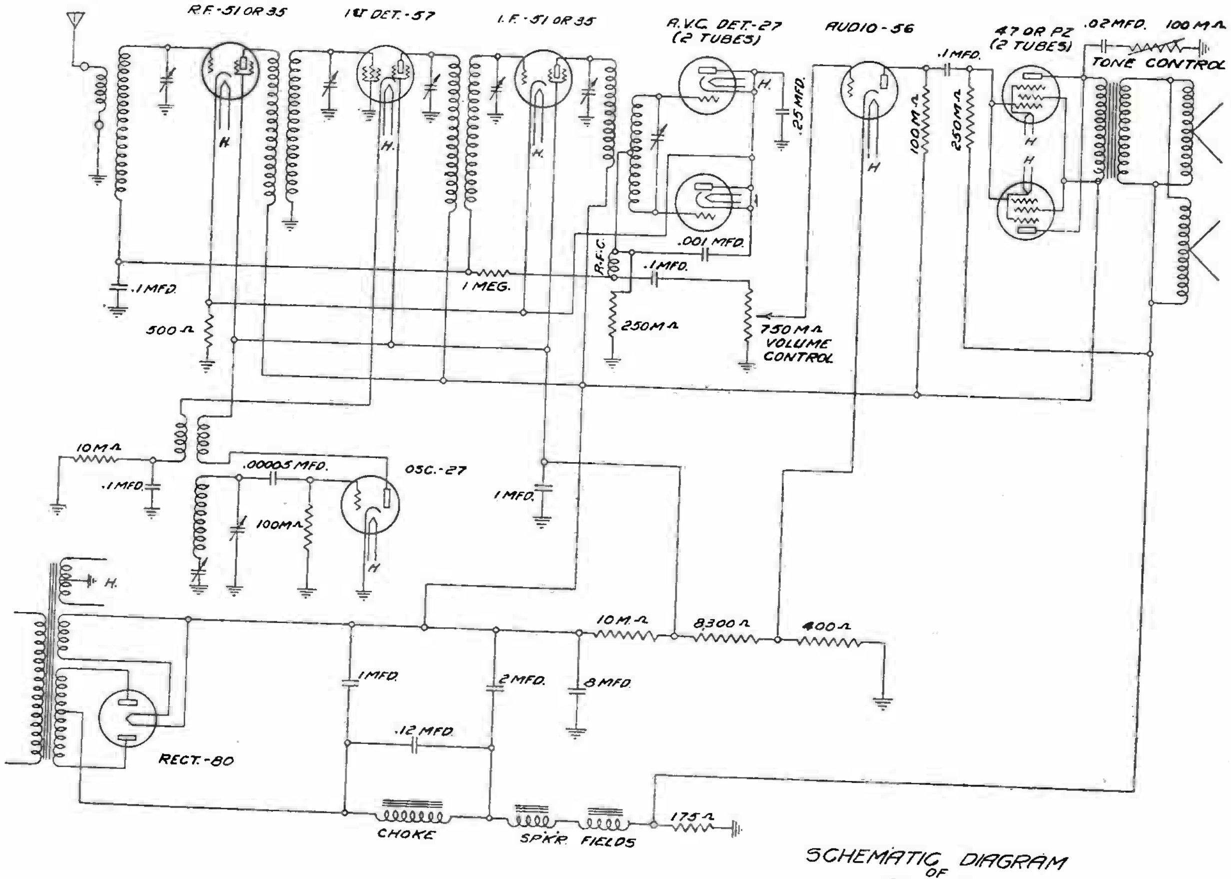

SCHEMATIC DIAGRAM OF CLARION MODEL-260
DRAWN BY: J.M. CHECKED:
APPROVED: DATE: 6-7-32

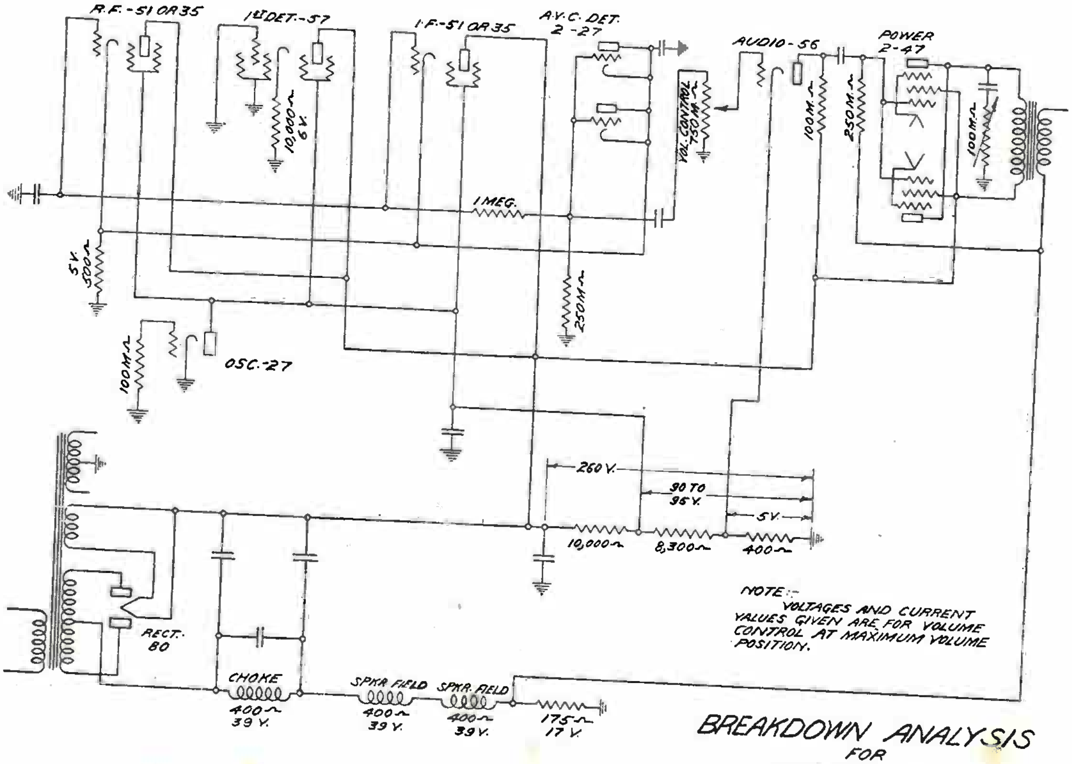

NOTE:- VOLTAGES AND CURRENT VALUES GIVEN ARE FOR VOLUME CONTROL AT MAXIMUM VOLUME POSITION.

BREAKDOWN ANALYSIS FOR MODEL-260

TRANSFORMER CORPORATION OF AMERICA

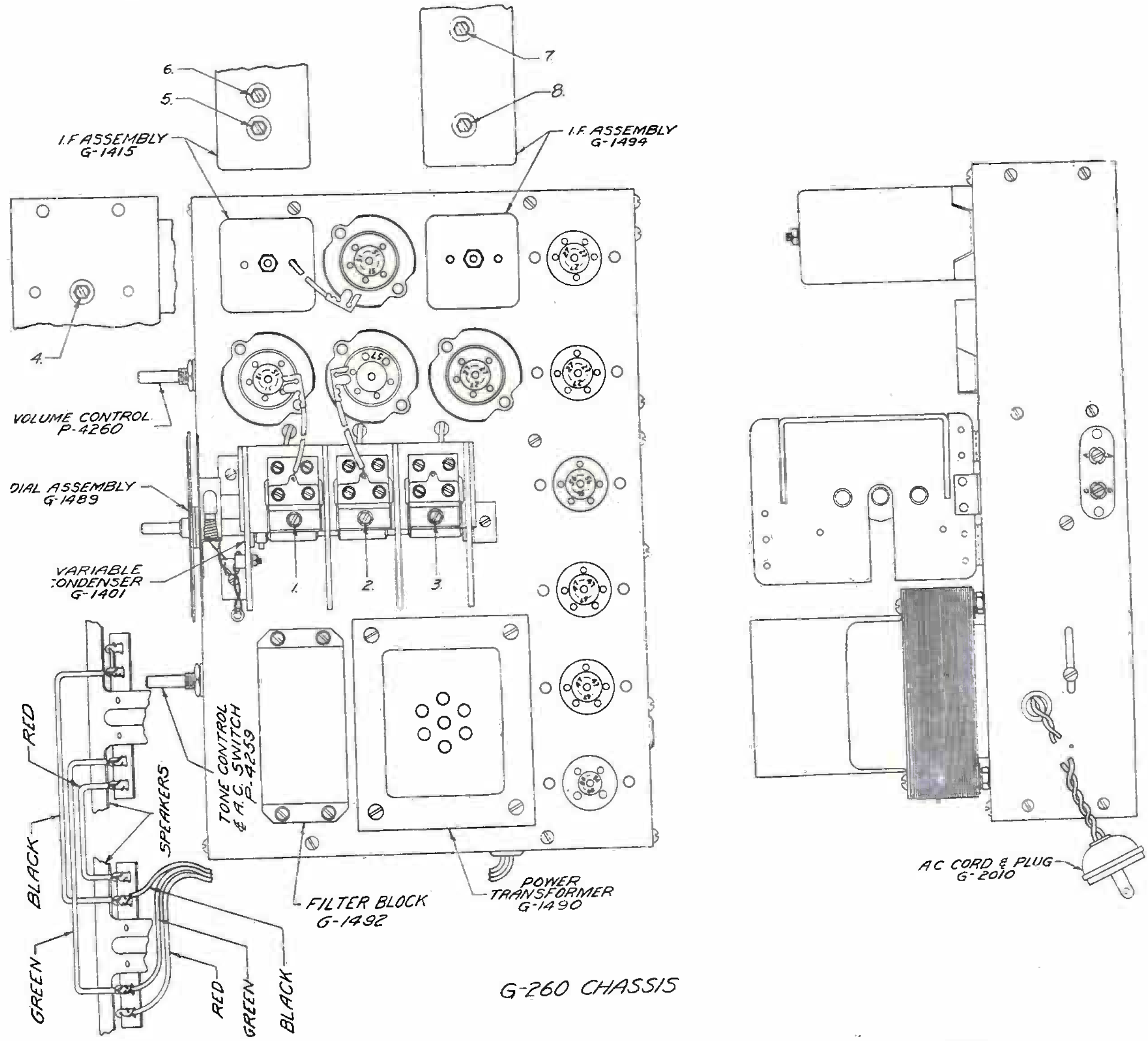

G-260 CHASSIS

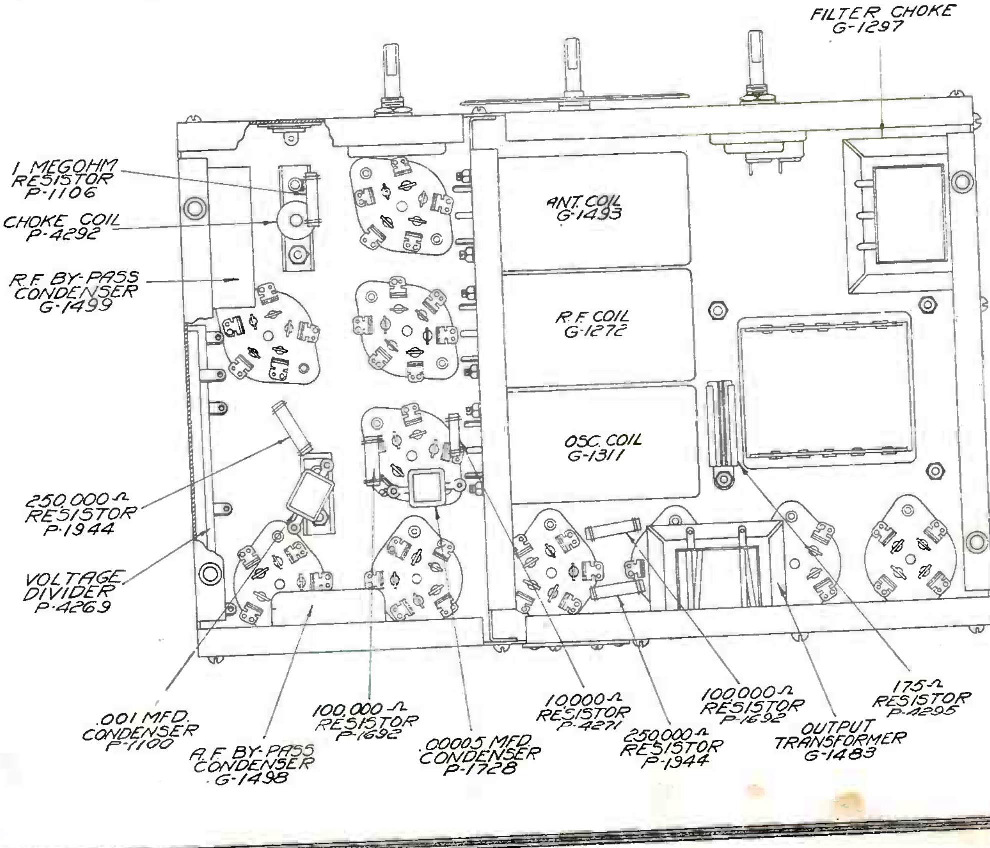

CONDENSERS AEROVOX **RESISTORS**

Designed for Reliable Service in All Types of Radio Equipment

Experienced Service Men demand Aerovox products because they can be relied upon to give dependable service in any apparatus for which they are designed. They are scientifically engineered and built to stand up under their rated circuit conditions and give the highest degree of efficiency and satisfactory performance in all modern radio equipment.

Write for the Aerovox Condenser and Resistor Manual and Catalog

A helpful manual and catalog containing specifications of all Aerovox products, including insulation specifications of condensers, current carrying ratings of resistors and all physical dimensions, electrical characteristics and list prices of condensers and resistors, will gladly be sent upon request.

HI-FARAD
DRY ELECTROLYTIC CONDENSERS

Provide long life and high filtering efficiency due to their inherent operating characteristics. They are compact, low in cost, low in leakage, stable in operation and operate over wide ranges of temperature.

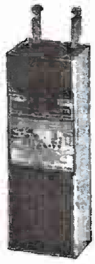

Write for this Helpful Publication

The Aerovox Research Worker is a free publication, issued by the Aerovox Corporation to keep radio experimenters, service men, and manufacturers abreast of the latest developments in radio. A request will bring you this interesting and helpful periodical regularly without charge or obligation.

AEROVOX CORPORATION
74 Washington Street
Brooklyn, N. Y.

Manufacturers of
The Most Complete Line of Condensers and Resistors
in the Radio and Electrical Industries

Atwater Kent Speaker Filter Condenser

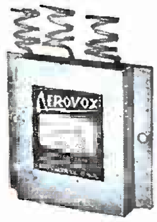

Atwater Kent Bypass Condenser

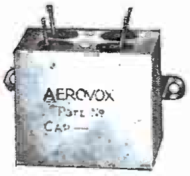

Crosley Replacement Condensers

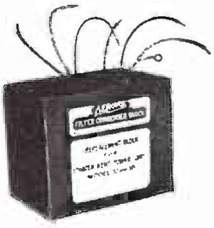

Atwater Kent 37 and 38 Unit

Majestic Model 9P6 Unit

Uncased Replacement Condensers

Metal Case Condensers

Moulded Bakelite Mica Condensers

Auto Radio Condensers

Carbon Resistors

Pyrohm Resistors

TRANSFORMER CORPORATION OF AMERICA

CONTINUITY TEST TABLES

Taken with 10 volt scale, 1000 ohm volt meter and 4.5 volt battery in series.

Ckt. Tested	From	To	Reading	Your Reading
Ant. Coil	Antenna post	Ground post	4.5	
R. F. Grid	Rect. fil. prong	R. F. grid clip	.05	
R. F. Cathode	Rect. fil. prong	R. F. cathode prong	1.5	
R. F. Screen	Rect. fil. prong	R. F. screen prong	2.2	
R. F. Plate	Rect. fil. prong	R. F. plate prong	4.5	
1st Det. Control Grid	Rect. fil. prong	1st. det. control grid	1.5	
1st Det. Cathode	Rect. fil. prong	1st det. cathode prong	1.1	
1st Det. Screen	Rect. fil. prong	1st det. Screen prong	2.2	
1st Det. Plate	Rect. fil. prong	1st det. plate prong	4.5	
1st Det. Sup. Grid	Rect. fil. prong	1st. det. sup. grid prong	1.5	
I. F. Control Grid	Rect. fil. prong	I. F. control grid prong	.05	
I. F. Cathode	Rect. fil. prong	I. F. cathode prong	1.5	
I. F. Screen	Rect. fil. prong	I. F. screen prong	2.2	
I. F. Plate	Rect. fil. prong	I. F. plate prong	4.5	
Osc. Control Grid	Rect. fil. prong	Osc. control grid prong	.3	
Osc. Cathode	Rect. fil. prong	Osc. cathode prong	1.5	
Osc. Plate	Rect. fil. prong	Osc. plate prong	2.2	
Diode Det. Grids	Rect. fil. prong	Diode det. grid prongs	.2	
Diode Det. Plates	Rect. fil. prong	Diode det. plate prongs	1.5	
Diode Det. Cathodes	Rect. fil. prong	Diode det. cathode prongs	1.5	
1st Aud. Control Grid	Rect. fil. prong	1st aud. control grid prong	.05	
1st Aud. Cathode	Rect. fil. prong	1st aud. cathode prong	1.5	
1st Aud. Plate	Rect. fil. prong	1st aud. plate prong	.4	
Pentode Control Grids	Rect. fil. prong	Pentode control grid prongs	.1	
Pentode Plates	Rect. fil. prong	Pentode plate prongs	4.4	
Pentode Sp. Chg. Grids	Rect. fil. prong	Pentode Sp. Chg. grid prongs	4.5	
Pwr. Trans. Pri.	Across	AC plug	4.5	
Pwr. Trans. Sec.	Across	Rect. plate prongs	4.2	
Speaker V. C.	Green cable lead	Black cable lead	4.5	
Speaker Field Coils	Red cable lead	Black cable lead	4.1	

Volume control position "full on".

VOLTAGE ANALYSIS

Taken with Weston 565 Analyzer

No.	Stage	Type Tube	"A" Volts	"B" Volts	Cont. Grid Volts	Cath. Volts	Screen Volts	Ip Norm.	Misc.
1	R. F.	51 or 35	2.15	250	.4	4.	80	4.	
2	1st Det.	57	2.25	137	4.5	5.	83	.5	Suppressor Grid 4.5
3	Osc.	27	2.25	107	0	0	0	8.	
4	I. F.	51 or 35	2.25	244	.4	4.	76	1.7	
5	AVC Det.	27	2.25	0	2.5	4.5	0	0	
6	AVC Det.	27	2.25	0	2.5	4.5	0	0	
7	1st Audio	56	2.25	178	2.	4.	0	1.5	
8	Pentode	47	2.25	235	16	0	0	25.	Pentode Sp. C Grid 245
9	Pentode	47	2.25	235	16	0	0	25.	Pentode Sp. C Grid 245
10	Rect.	80	4.9	140	0	0	0	98.	

Note: Since resistance tolerances in the set are plus or minus 10 percent, and the tubes may vary over 20 percent, your readings may disagree with the above by plus or minus 30 percent.

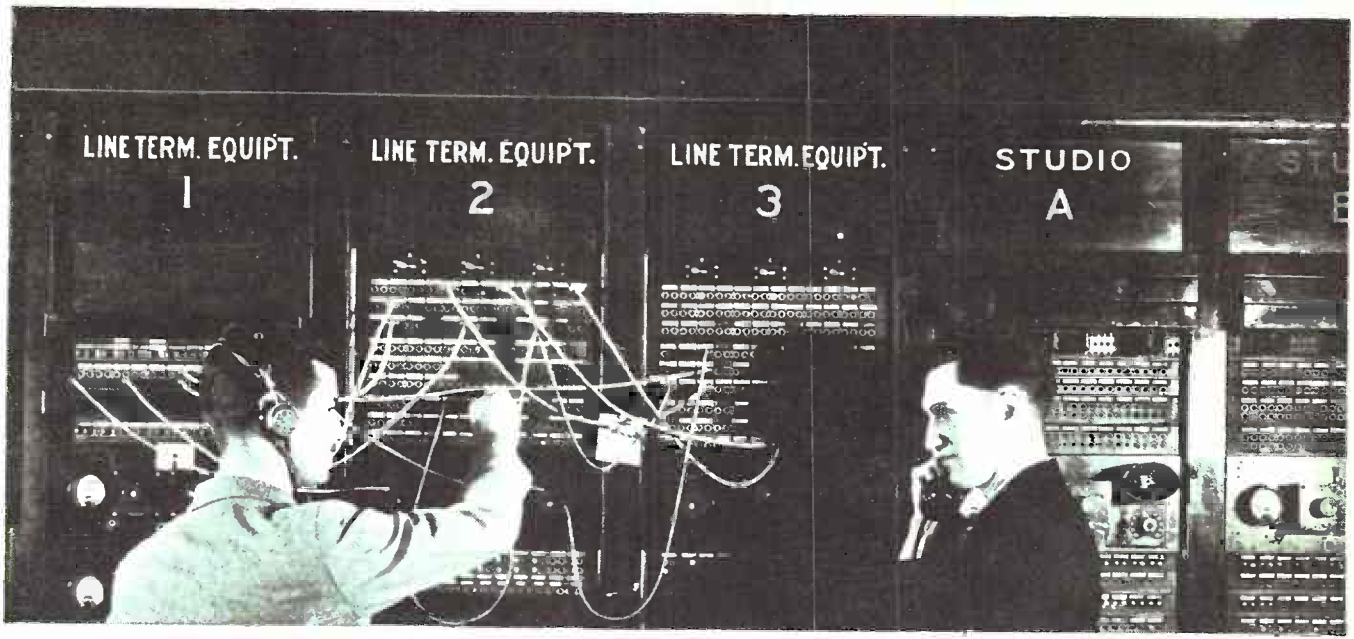
LINE TERM. EQUIP'T. 1
LINE TERM. EQUIP'T. 2
LINE TERM. EQUIP'T. 3
STUDIO A

TRANSFORMER CORPORATION OF AMERICA

Radio Service Data Sheet

CLARION DE LUXE MODELS AC-280 AND 25-280 12-TUBE SUPERHETERODYNE

(Four, type 46 tubes in double push-pull; mute switch; dual reproducers; twin-triode duo-diode second-detector combined with delayed A.V.C.)

One of the newest of Transformer Corporation of America's "Clarion" line of radio sets is the DeLuxe Model 280 superheterodyne, listing for less than seventy dollars, which incorporates a number of interesting circuit variations with which the Service Man must acquaint himself: these new circuit "kinks" are evident by reference to the schematic circuit.

The component characteristics are as follows: Resistor R1, manual volume control, 0.75-meg.; R2, tone control, 0.1-meg.; R3, 500 ohms; R4, R8, 10,000 ohms; R5, 0.1-meg.; R6 1. meg.: R7, ¼ meg.; R9, 8,100 ohms: R10, 1.000 ohms; R11, 300 ohms. The field coils measure 400 ohms each; choke Ch., 400 ohms.

Condensers C1 to C3 are the tuning units (they are shunted by trimming condensers which do not appear in the schematic circuit); padding condenser C4 also is shunted by a trimming condenser; C5, C15, C21, 0.1-mf.; C6, 50 mmf.; C7 to C10 are the I.F. trimmers; C11, .25-mf.; C12, .02: C13, C18, 1. mf.; C14, .001-mf.; C16, 8 mf.; 17, 2 mf., C19, .12-mf.; C20, .11-mf.

Operating tube characteristics (Line potential, 115 V., vol. control R1 full on: mute switch Sw. 2 "out.") Filament potential, V1, V3, V4, V5, V6, 2.2V.; V2, B7, 2.3 V.; V8, V9, V10, V11, 2.4 V.; V12, 4.9 V. Plate current, V1, 250 V.: V2, 242 V.: V3, 110 V.; V4, 249 V.: V5, V6, 0 V.: V7, 237 V.; V8, V9, V10, V11, 245 V.: V12, 340 V. (each plate). Control-grid potential, V1, V4, 0.2-V.: V2, 4V.: V3, .05-V.; V5, V6, 2 V.; V7, 3 V.; V8, V9, V10, V11, 32 V. Cathode potential, V1, V4, 4 V.: V2, V5, V6, 5 V.; V3, 0 V.: V4, 4 V.: V7, 9.5 V. Screen-grid potential, V1, V4, 77 V.: V2, 85 V.: V3, V5, V6, V7, 0 V. Plate current (normal), V1, 4 ma.: V2, 0.25-ma.; V3, 8 ma.; V4, 2 ma.: V5, V6, 0 ma.: V7, 3 ma.: V8, V9, V10, V11, 20 ma.; V12, 108 ma. (per plate).

When a strong signal is being received and a long antenna is being used, or the volume control is set too high, the result may be tube overload. This may take the form of a whistle when tuning across the sidebands.

A good ground is important to satisfactory operation.

The model AC-280 chassis is designed for operation on 110 to 120 V., 50 to 60 cycles: the model 25-280 operates on 110 to 120 V., 25 to 40 cycles.

There are four construction details of outstanding interest, to wit: "delayed" automatic volume control; double push-pull power amplification (using, incidentally, the new type 46 tubes); twin-triode duo-diode second-detector, and; dual reproducers.

In the second-detector stage two type '27 tubes are used in double diode connection. In this circuit the detectors are used as ordinary two-element rectifiers of the R.F. signal fed to their control-grids, which are connected in push-pull. The plates are connected in parallel, the audio component dividing into two paths.

One circuit for the A.F. is through condenser C11 to ground; the other follows the common R.F. and I.F. cathode path through R3 and then to ground. The latter connection has an additional path through C14; then, there is one circuit to ground through R7, and another through RFC, C15 and R1. The latter connection (at the tap between C15 and R1 forms part of another path which is the control-grid return circuit of V1 and V4. (This return circuit includes a filter, R6 and C21.)

Automatic volume control is secured through the pulsating D. C. (rectified R.F.) drop across R7. The higher powered stations with strong R.F. carriers when tuned in cause greater pulsating D.C. to flow from the detectors' plate-cathode, through R7, to ground; thus, the drop across R7 is increased.

This increased potential is impressed on the control-grids of the R.F. and I.F. tubes, V1, V4, increasing their negative bias; thus, the sensitivity is automatically reduced.

In the instance of a reduction of signal strength, the R.F. input to detectors V5, V6 will be lowered, resulting in a reduction of the amount of pulsating D.C. flowing through R7: this lowers the bias potential applied to the control-grids of V1 and V4 and so increases the sensitivity of the receiver to maintain even A.F. output.

Now, the resulting design is such that if the set is tuned with normal speed, there will be little or no between-station (or "A.V.C.") noise—the A.V.C. action is *delayed* (due to the "time constant" of R7 and C14).

Incidentally, due to the anti-fading characteristic of the A.V.C. circuit, static may appear to rise and fall in intensity during reception of a program; this is because the sensitivity of the set will be following the signal in and out of the noise level if the signal is fading.

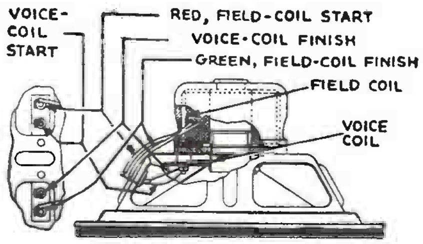

To reduce to zero the sounds that are incidental to tuning in a station, mute switch Sw. 2 is operated.

The power rating of this set is 129 watts at 115 V.

Removing the tube shields may cause circuit instability.

The dual reproducers have dissimilar reproduction characteristics.

The trimmers of condensers C1, C2, C3 are located on the tuning gang; they range, in this order, from the front to back. The trimmer in shunt to C4 is located on the top of the chassis and directly in back of the tuning condenser gang. Trimmers C7 and C8 are located on the front surface of I.F.T. 1 (which is nearest the tuning condenser gang: the upper adjustment is C8 and the lower one, C7. Trimmers C9 and C10 are located on the left surface of I.F.T. 2 (at the extreme left of the chassis): the upper adjustment is C9 and the lower one is C10.

Since poor tone quality will result if the tuning is not exactly "on the button," instruct the customer to first reduce the volume control to the point of lowest audibility before making the final tuning adjustment for the "center" of the signal.

Do not forget that due to the use of an I.F. of 175 kc. there may be a heterodyne whistle at 700 kc., the fourth-harmonic, under exceptional conditions.

The R.F. circuits are resonated at 600 and 1400 kc. The factory service department states: "The most important advice we can give in regards to the adjustment of trimmers would be 'don't make 'em'."

Due to the fact that it is absolutely essential for good tone quality that the reproducer field and voice coils be correctly connected we reproduce a detailed illustration of the connections for these two devices.

To test the ground connection, connect a 100 W. lamp in series with the ground and each side of the 110 V. light-line, in succession. The lamp should light brilliantly. If the lamp does not light at all, it indicates "no ground" and if it lights, but dimly, it indicates a high-resistance ground which must be corrected. Where the line test indicates that no ground on power lines is being used, the local power company should be notified, as this condition generally results in hum and background notise in the receiver. The best ground is a cold-water pipe connection.

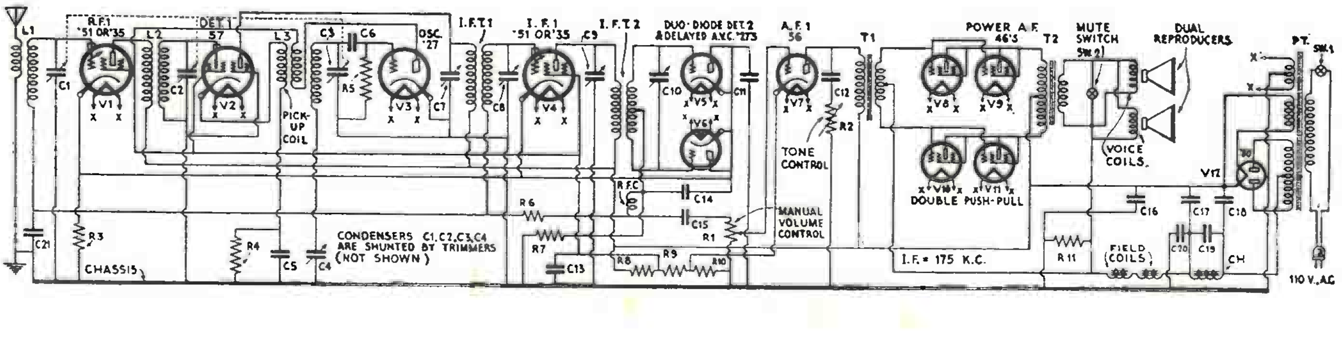

E. M. RUDD
EXPERT RADIO SERVICE
931 PHONES 114

BELLEVUE, OHIO

May 12, 1932.

National Carbon Co., Inc.,
30 East 42nd St.,
New York, N. Y.

Gentlemen:

In 1928 I was doing radio service work for a dealer who sold "off brand" tubes and my experience with them made me decide that if I ever was in business for myself I would examine and test a tube to the best of my ability before passing it on to my customers. My opportunity to go in business for myself came sooner than I had expected and I decided to sell Eveready Raytheons, a decision I have never had cause to regret.

The uniform quality and their ability to remain that way thru out their life must be due to their 4-Pillar Construction. Any one, however unfamiliar with tube construction they may be, is bound to choose Eveready Raytheons just from their appearance of sturdiness. The lack of sales resistance proves it.

We have used Eveready Raytheons in talking picture work where dependability is "9 points of the law" and they gave complete satisfaction. We have used them in public address work where the treatment they received was anything but gentle, with excellent results.

To say it short and sweet Eveready Raytheons "fill the bill".

Very truly yours,

RUDD RADIO SERVICE,
220 UNION BANK BLDG.,
BELLEVUE, OHIO.

ONE of the 961 LETTERS

Received from Radio Servicemen during the past several months

Notice the four strong pillars. With this solid foundation the fragile parts cannot move a hair's breadth from their fixed position. Can never lose their accuracy! All other tubes have only a two-pillar foundation. *Two* supports instead of *four!* Jolts, bumps and vibration often impair their vital accuracy, and their performance.

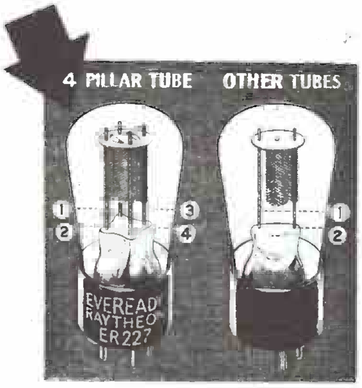

WARNING!

The market is flooded with old, slow-heater tubes. Eveready Raytheons are quick-heaters. Modern tubes heat up in 10 seconds or less.

Write for the new Tube Characteristic Chart
Use special postal card included in this manual

Eveready Raytheon Tube Division

NATIONAL CARBON COMPANY, INC., NEW YORK, N. Y.

BRANCHES: CHICAGO · NEW YORK · SAN FRANCISCO

UNIT OF UNION CARBIDE UCC AND CARBON CORPORATION

ZENITH RADIO CORPORATION

OPERATION

MODELS 91 and 92

The Zenith Models 91 and 92 uses ten tubes in a modern Superheterodyne circuit, employing many refinements. Among these being an antenna resonator, pre-selector stage, four tuned circuits, automatic volume control, and push-pull audio amplification. The following is a list of the various types of tubes used and the circuit duty of each.

R. F.—1 Z-51 Multi-Mu
1st Detector—1 Z-51 Multi-Mu
Oscillator—1 Z-27
I. F.—1 Z-51
2nd Detector—1 Z-27
1st A. F.—1 Z-27
2nd A. F.—2 Z-45
A. V. C.—1 Z-24
Rectifier—1 Z-80

In order to obtain a thorough understanding of how the ten tube Superheterodyne operates, the circuit should be followed from the antenna. A tuned coil and condenser forms the pre-selector stage which is coupled at one end to the antenna through the variable antenna compensating condenser, and from the other end direct to ground. The pre-selector coil is placed in inductive relation to the 1st R. F. tuning coil and condenser so that a transfer of energy occurs from one to the other. The 1st R. F. tuned grid circuit returns its R. F. energy through the path of least resistance, namely a fixed condenser between the coil and ground. The plate circuit of the R. F. stage is capacity coupled to the 1st detector tuned grid circuit. A section of the variable condenser and a coil is also employed here which returns to ground through a fixed condenser in the same manner as the R. F. grid circuit. It should be noted that a pick-up coil is placed in series with the 1st detector cathode by which energy is absorbed and mixed with the signal generated in the oscillator circuit. An oscillator, operates at 175 kilocycles higher in frequency than the R. F. or 1st detector, and employs a grid coil and tuning condenser and also a tickler winding. A small series or padding condenser is connected between the variable condenser section and the oscillator coil return which enables the oscillator circuit to track accurately with that of the other tuned circuits over the entire broadcast scale. (See balancing.)

After the oscillator frequency has mixed with the incoming signal in the 1st detector it is tuned to an intermediate frequency of 175 kilocycles in the 1st detector plate circuit. The 1st detector tuned plate coil is inductively coupled to a tuned grid coil of the intermediate frequency amplifier. This coil is also tuned to a frequency of 175 kilocycles. Remaining at this same frequency the signal is transferred from the intermediate frequency amplifier to the 2nd detector by means of a tuned plate coil inductively coupled to a tuned grid coil in the 2nd detector grid circuit. The 2nd detector is resistance coupled to a Z-27 1st A. F. stage which is, in turn, transformer coupled to a pair of push-pull Z-45's. The tone control, consisting essentially of a variable resistance and fixed condenser, is connected from grid to grid of the Z-45 tubes.

Automatic Volume Control

A Z-24 automatic volume control tube keeps the volume of the incoming signal constant by varying the grid bias voltage on the 1st R. F., 1st detector, and I. F. stages, in relation to the change of R. F. energy amplified before the 2nd detector. The three grid returns mentioned are coupled to the plate of the automatic volume control tube through three limiting resistors, while the 2nd detector grid couples to the volume control tube grid through a small fixed condenser. Any variation in signal strength on the 2nd detector grid is transferred to the automatic volume control tube which, proportionately varies the voltage drop across the volume control tube plate resistor which changes the bias of the three tubes mentioned.

The local distance switch simply shunts a resistor from plate to cathode of the automatic volume control tube when in the local position, thereby placing a constant bias on the three R. F. stages. This has the effect of minimizing the automatic volume control action and, consequently, subdues noise between stations. When the local distance switch is in the distance position it opens the external resistor circuit, thereby, allowing the volume control tube to operate normally.

:::: PRACTICAL RADIO ENGINEERING ::::

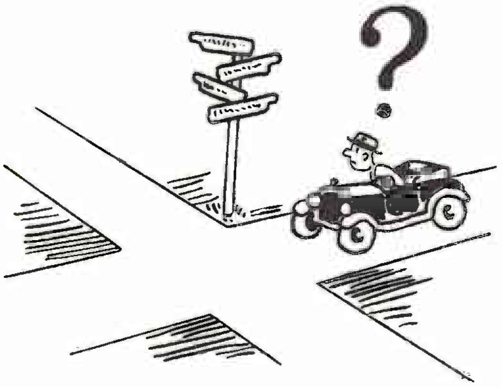

You Don't Have to Stop So Often . . . . . . if you know the way!

Just like the auto driver who don't know his way, is the service man who loses time by continually referring to his diagrams, when advanced training would teach him to instantly gather the necessary information.

. . . you don't have to look so often at circuit wirings — if you are trained to intelligently read diagrams and data!

If You Know Radio . . . You'll Understand the Value of This Course!

This is not an ORDINARY course in radio! It is an ADVANCED course in RADIO ENGINEERING prepared after years of compiling, for EXPERIENCED RADIOMEN ONLY. That's why you will realize that advanced training and a thorough technical knowledge is necessary for advancement.

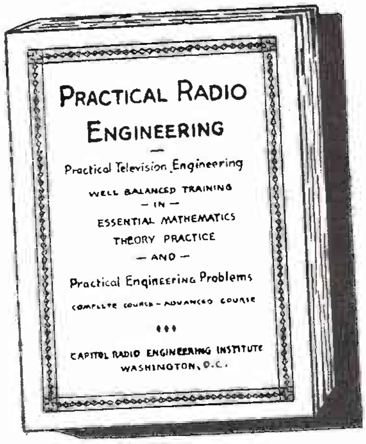

← FREE!

This 28-page booklet that tells you about the C.R.E.I. course and shows you that better jobs are held by trained minds.

This course is not for beginners . . . we are not trying to OVERCROWD the radio industry . . . we want to help and encourage those who already have a basic understanding of Radio! It costs you nothing to learn details. Write us today for information regarding this advanced training . . . no obligation, whatsoever.

E. H. RIETZKE
President, Capitol Radio Engineering Institute

"Mr. Radioman . . . Don't follow the leader - be original - develop new ideas - I had your job once and know that a higher technical understanding is necessary to achieve success in Radio."

Address All Inquiries to

CAPITOL RADIO ENGINEERING INSTITUTE

FOURTEENTH and PARK ROAD, N. W. Dept. O WASHINGTON, D. C.

Mail Card
IN REAR OF MANUAL

Tear out the post card in the back of this book—be sure it's the right one—and mail to us for our Free booklet sent without obligation.

ZENITH RADIO CORPORATION

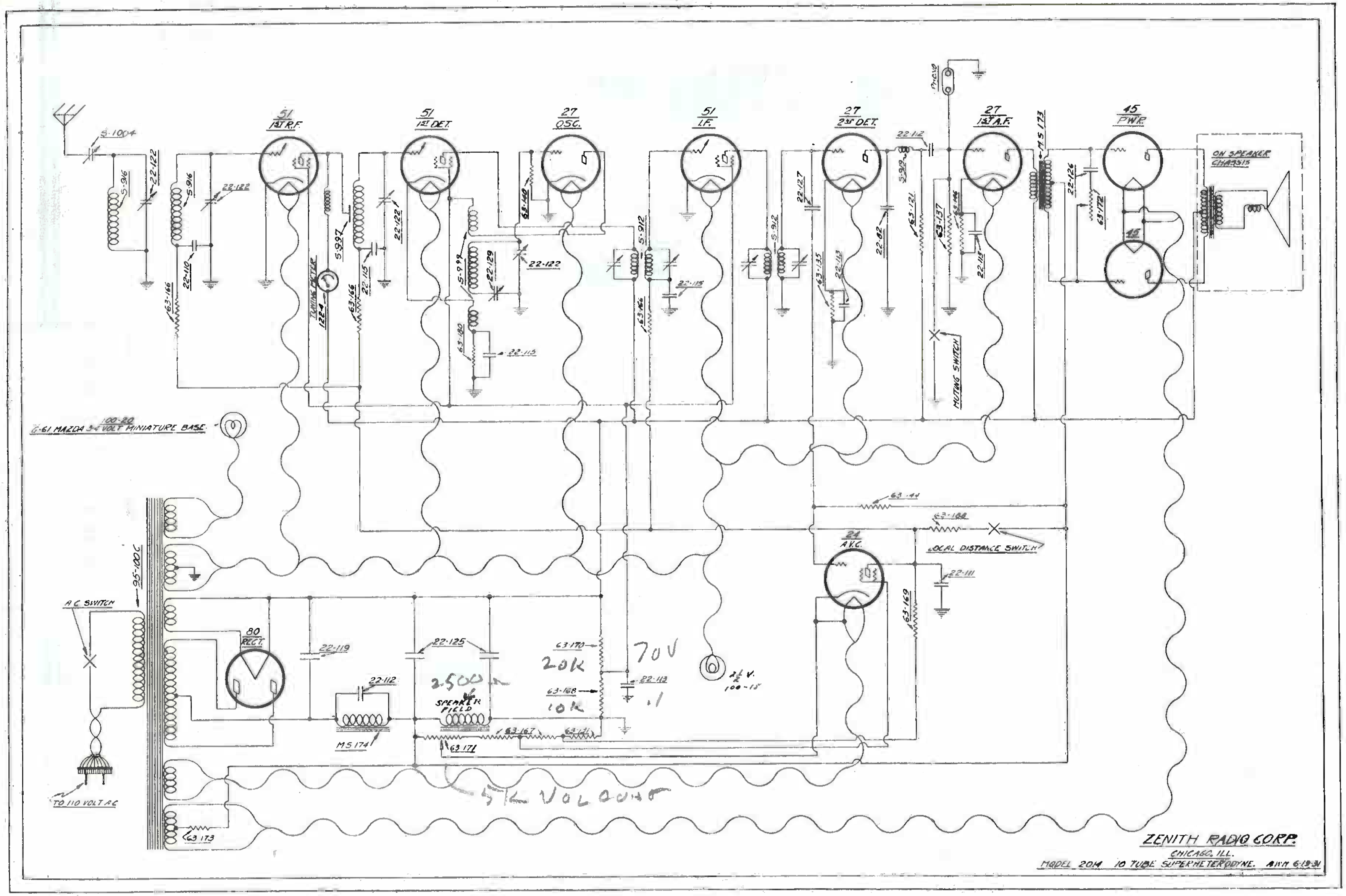

FIG. 2—CIRCUIT DIAGRAM—MODELS 91-92

Mayo
REPLACEMENT PARTS for STANDARD RECEIVERS

SERVICE MEN

know that replacement units for radio receivers **must measure** up to exactly the same standards as the original. MAYO Parts are so exactingly made, constructed with materials of superior quality, that they are guaranteed for six months. MAYO Replacement Parts fill the requirements of Service Men—they have been used in all branches of radio work for many years.

MAYO Replacement Parts are made for use in over a hundred standard radio receivers. The parts listed below are manufactured by MAYO:

CONDENSERS
TRANSFORMERS
RESISTANCES
VOLTAGE REGULATORS
VOLTAGE DIVIDERS
FILTER BLOCKS
CHOKES
COILS
POWER PACKS
MICROPHONES
AND OTHER PARTS

Look for the MAYO name on every replacement part—it is your guarantee of a precision product.

Write today, address Dept. MS, for free booklet showing complete list of MAYO STANDARD REPLACEMENT PARTS.

MAYO LABORATORIES : Incorporated
281 EAST 137th STREET NEW YORK, N. Y.

Mayo Instrument Corporation is a subsidiary of the Mayo Laboratories, Inc., manufacturers of a complete line of microphones and public address equipment. Advertisement will be found on page 679.

Thousands of Radio Men
have asked for a book of this kind during the past year
The RADIO-CRAFT INDEX

Contains a thorough, alphabetical and topical arrangement of every article and subject which has been published in the issues of RADIO-CRAFT from July, 1929, to June, 1932.

RADIO Men have proved conclusively to us the need for, and practical application of a comprehensive and complete listing of every article which has thus far been published in RADIO-CRAFT. Here you will find each topic so sub-divided and cross-indexed that a mere glance at the subject indexed will give you any number of classifications and applications for its use. For example, if you look at tubes, you will find under this topic, various sub-titles, general, power, transmitting, photocells, testing of tubes, thyratrons, etc. Every article of reference in this book has been considered of such importance that when you refer to a certain classification, listed below the main topic, you will find perhaps a dozen or more articles treating the subject from different angles. The author in each case is given—the exact issue in which the article appeared, and the page on which it is to be found.

THIS BOOK CANNOT BE BOUGHT ON THE NEWSSTAND -- ONLY DIRECT FROM THE PUBLISHERS

This Index is so accurately compiled, by C. W. Palmer, one of radio's well-known writers, that in less than two minutes you can turn to any article without having to wade through all the issues of RADIO-CRAFT which have been published during the past three years.

The page size of the RADIO-CRAFT INDEX is exactly the same size as the monthly magazine. It can be conveniently kept on file with the copies of the magazine—ready for quick reference. This book is sold only by the publishers at 25c the copy. Mail coupon below for your copy of the RADIO-CRAFT INDEX.

Clip and Mail Coupon TODAY!

PUBLISHERS OF RADIO-CRAFT, M33
96-98 Park Place, New York, N. Y.

Enclosed you will find my remittance of 25c (check, stamps or money order accepted) for which you are to send me, postage prepaid, One Copy of the RADIO-CRAFT INDEX.

Name ....

Address ....

City .... State ....

PARTIAL CONTENTS OF THE RADIO-CRAFT INDEX

- Amplifiers
  - General
  - Audio Frequency
  - Intermed. Frequency
  - Power
  - Radio Frequency
- Antenna Systems
- Cabinets
- Circuits
  - Commercial
  - Experimental
- Code
- Coils and Tuning
- Components
- Cooperative Radio Lab.
- Detectors and Rectifiers
- Education
- Interference and Hum Eliminators
- Kinks
- Manufacturing
- Meters & Testing Equip.
- Miscellaneous
- Motion Picture Recording and Projection
- Music Instruments
- Neutralizing
- Novelties
- Patents
- Phonograph Reproduction and Recording
- Power Supply & Bat'ies
- Reception
  - General, Airplane,
  - Broadcast, Distance, Short Wave
- Remote Control
- Selling & Money-Making
- Servicing
  - General
  - Equipment,
  - Operating Notes for Service Men
  - Service Men's Data
- Set Construction
  - All Wave, Automobile
  - Broadcast, Short Wave
- Speakers & Reproducers
- Television
  - General, Reception, Transmission
- Tone & Volume Control
- Tools
- Transformers
  - General
  - Audio Frequency
  - Intermediate Freq.
  - Power
  - Radio Frequency
- Transmitters
  - General, Airplane, Amateurs, Broadcast
- Transmission
  - General, Airplane, Beam, Broadcast
- Tubes
  - General, Pentode, Photo Cells, Testing Thyratrons

ABSOLUTELY NOTHING WHICH HAS APPEARED IN RADIO-CRAFT HAS BEEN OMITTED FROM THIS VALUABLE COMPILATION . . . .

ZENITH RADIO CORPORATION

Balancing Chassis

Every Zenith Superheterodyne Receiver is carefully balanced on laboratory equipment before leaving the factory and should not require further attention in this respect. However, in the event that some part of the R. F. circuit has been changed, or the adjustments shifted by mishandling, the chassis may be rebalanced as follows:

If an oscillator is available more accurate results will be obtained. It should be accurately calibrated from 1500 to 550 kilocycles and should also have provision for generating a 175 kilocycle signal. In cases where an oscillator is not available a fairly good result may be had by listening to stations which operate as nearly as possible to the extreme ends of the dial. Although an output meter will give most accurate results, satisfactory adjustments can be made simply by listening to the speaker.

The chassis should be removed from the cabinet so that all adjustments are easily accessible. Next place the test oscillator in operation and connect it direct to the antenna and ground posts of the receiver. It should then be set to 1500 kilocycles and the receiver tuned to the same reading on the dial. If the oscillator is not accurate the stations will not be received on their proper calibration. If a station is used for this purpose, the dial pointer should first be set to the exact frequency of the station being received. Beginning with the variable condenser tuning section at the extreme left, which tunes the oscillator circuit, the trimmer should be regulated for maximum response, in either the loud speaker or output meter. It will be noticed that the second section does not employ a vernier adjustment. This stage is resonated by adjusting the antenna compensator knob as explained in the instruction card. The third, or 1st R. F. trimmer, is adjusted in the same manner as the oscillator. If at any time the volume reaches a very high level, so that it is not possible to determine slight changes, it should be reduced by means of the volume control knob so as to be barely audible. The fourth, or 1st detector section, is next in order and its trimmer should also be adjusted for resonance.

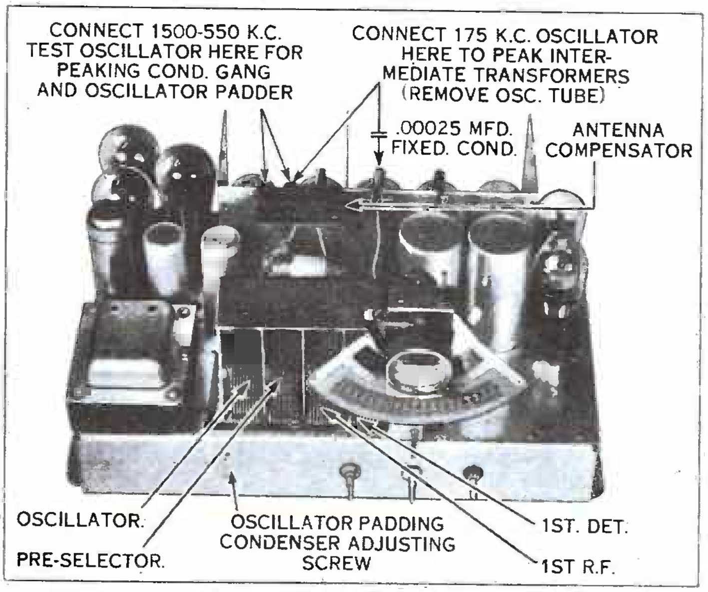

FIG. 3

After the vernier adjustments have been completed the test oscillator should be set at 550 kilocycles and the dial of the receiver turned until the oscillator signal is tuned in. Now the oscillator padding condenser (see fig. 3) should be very carefully adjusted with a screw driver for maximum output of the receiver, while rocking the tuning condenser back and forth over the signal. This padding adjustment brings the oscillating circuit of the receiver in resonance with the remaining tuned circuits and, thereby, enables it to tract accurately over the entire scale. The receiver will now operate at full efficiency and all stations will be received at their proper calibration. If this is not found to be entirely so, the entire balancing operation should be repeated.

The intermediate transformers used in the ten tube Superheterodyne have been accurately peaked at 175 kilocycles on a temperature controlled crystal oscillator before leaving the factory. It is not recommended that their adjustments be tampered with unless an oscillator is available which is very accurately calibrated at 175 kilocycles, or unless the serviceman is absolutely certain the trouble lies in their adjustment. However, if it is necessary to check the adjustments, the 175 K. C. test oscillator may be connected to the grid terminal of the 1st detector through a .00025 fixed condenser. The ground lead of the test oscillator is connected to the ground post of the receiver. The oscillator tube must be removed from the chassis while this operation is being performed. Four adjusting screws are provided under the chassis directly beneath the intermediate transformers, which tune the plate circuit of the 1st detector, grid and plate circuits of the I. F. stage, and grid circuit of the second detector. (See wiring diagram.) Beginning with the 2nd detector grid vernier, each adjusting screw should, in turn, be set for maximum signal output from the speaker or output meter. For best results the verniers should be gone over twice in the same rotation always keeping the output from the test oscillator at the weakest possible strength in order to determine slight variations in volume.

They Have Copied Everything—

Except CERTIFIED TRIAD *Quality*

IT IS WRITTEN—

"Imitation is the sincerest form of flattery"

TRIAD Appreciates the compliment it receives each month from other tube manufacturers who have copied our sales plan—our method of advertising—our discount schedules

TRIAD Was first to recognize the Service Man

TRIAD Was first to make double-tested tubes

TRIAD Was first to offer a plan which really makes money for the dealer and Service Man

OTHERS have made every effort to do the same thing

BUT

THEY HAVE NOT BEEN ABLE TO DUPLICATE

CERTIFIED

TRIAD→Quality

TUBES

CERTIFIED Triad Dealers and Service Men everywhere have sold many thousands of these tubes,—they are making money—there hasn't been a single complaint. Mail the coupon today and learn how you can sell these supergrade tubes at a real profit. We protect you in your territory and you are sure of all of the inducements offered by other manufacturers, plus quality which is in a class by itself. GET THE FACTS!

TRIAD Manufacturing Co.
Pawtucket, R. I.

Gentlemen:

Please send me the outline of the CERTIFIED TRIAD Sales Plan for Dealers and Service Men.

Name...

Address...

City.......................................State...............

My letterhead or business card is attached

ZENITH RADIO CORPORATION

Socket Voltages

Type	Position	Fil. Volts	Plate Volts	Control Grid Volts	Cathode Volts	Plate M. A.	S. G. Volts
Z-51	1st. R. F.	2.25	175	.2	0	7.	100
Z-51	1st. Det.	2.25	175	3.5	.4	3.5	90
Z-27	Osc.	2.2	70	0	0	8.5	0
Z-51	I. F.	2.2	200	4.	0	2.5	115
Z-27	2nd. Det.	2.2	115	0	9.	.5	0
Z-27	1st. Aud.	2.2	145	0	13.	6.5	0
Z-45	P. P.	2.2	275	54.	0	30.	0
Z-45	P. P.	2.2	275	54.	0	30.	0
Z-24	A. V. C.	2.2	35	.4	0	0	54
Z-80	Rect.	4.8	355	0	0	76.	0

Voltage readings taken with a Weston type 566 tester. Manual volume control in maximum position and antenna and ground disconnected. Line voltage 112.

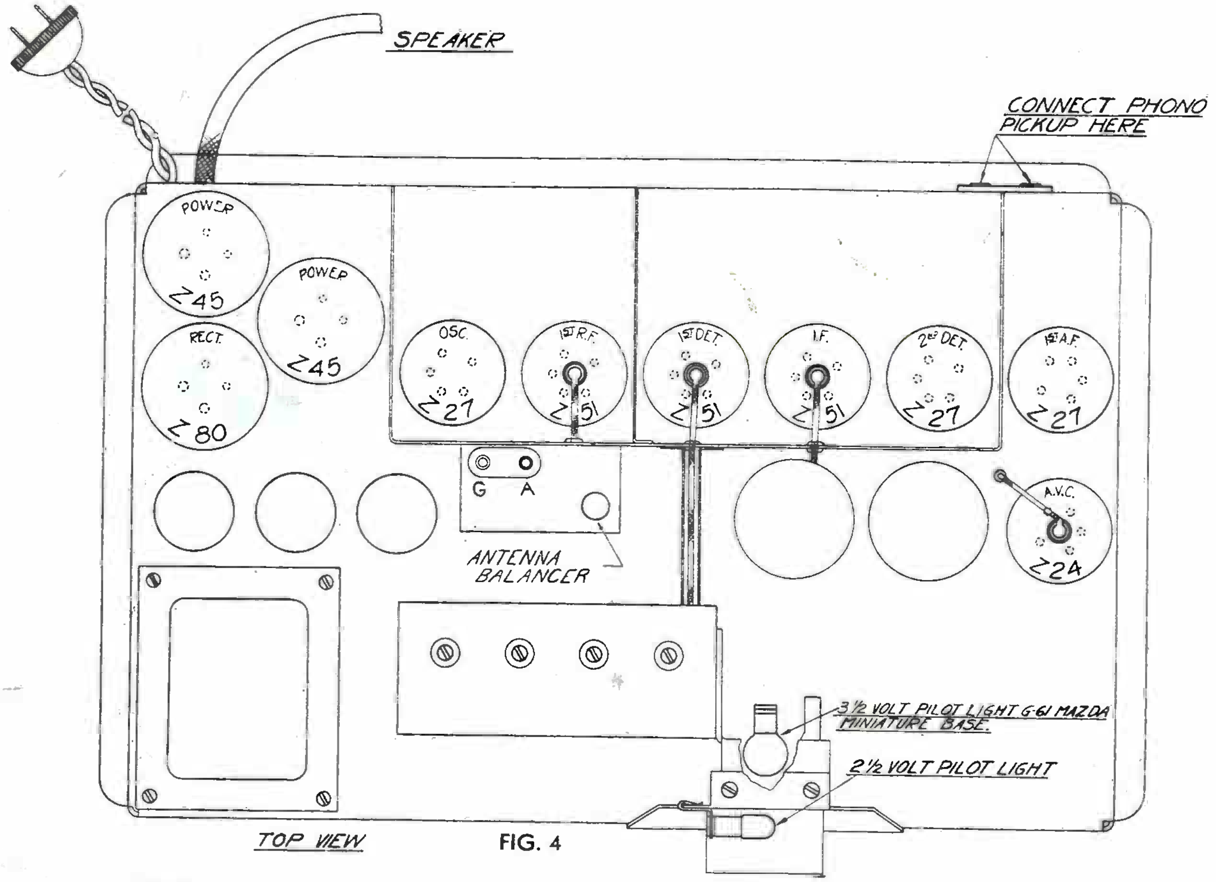

FIG. 4

TUBE LAYOUT - Showing Position and Circuit Function of each.

Mayo

The House of *all* Types of Microphones *and* Public Address Systems

TO the radio industry MAYO offers a most complete line of Microphones and Amplifiers for broadcasting, recording or public address work. Every product is exclusively manufactured by MAYO, and tested to meet standard requirements.

Our engineers, after exhaustive research, have produced MAYO microphones and public address systems, at a cost far below other competing products, yet they have incorporated every modern improvement in the design of MAYO instruments.

PUBLIC ADDRESS ACCESSORIES include amplifiers up to 5,000 watts, microphones, transformers, stands, sockets, attenuators, faders, controls, cables and other items.

Address Dept. SM for booklet on MAYO Improved Microphones.
Sent FREE upon request.

MAYO INSTRUMENT CORPORATION

281 EAST 137th STREET NEW YORK, N. Y.

Mayo Laboratories, Inc., is a subsidiary of the Mayo Instrument Corporation, manufacturers of the famous MAYO Standard Replacement Parts Advertisement will be found on page 683.

"Cliff" Denton

has written another valuable book for Radio Service Men

RESISTANCE MEASUREMENTS

The Modern Method of Servicing Radio Receivers

50c.

Of the difficult problems which Service Men face today when repairing receivers, the greatest is that of replacing proper resistance values in sets. This task becomes even more difficult when the values of resistors are unknown; and manufacturers of many standard sets do not pass this information on to Service Men.

In this new book, "RESISTANCE MEASUREMENTS," radio men will find the information needed to quickly place a receiver in normal operating condition. This book cuts in half, the time usually required to adjust the average set.

Sufficient space has been devoted to the elementary problems and the theory of electricity as it is applied to resistance measurements so that the Service Man will have a comprehensive idea as to how to overcome this problem.

Below you will find a partial list of the contents which will appear in this new book . . . prepared by one of radio's foremost service writers, Clifford E. Denton.

THIS BOOK IS A NEW ADDITION TO THE RADIO-CRAFT LIBRARY SERIES.

GERNSBACK PUBLICATIONS, Inc.
96-98M Park Place, New York, N. Y.

Enclosed you will find my remittance of Fifty Cents (check, stamps or money order accepted), for which you are to send me One Copy of RESISTANCE MEASUREMENTS, by Denton.

Name ....

Address ....

City .... State ....

Partial Contents of RESISTANCE MEASUREMENTS

64 PAGES — OVER 100 ILLUSTRATIONS
STIFF FLEXIBLE COVERS — 6 x 9 INCHES

ZENITH RADIO CORPORATION

See 1932 Page 576-1 For Parts

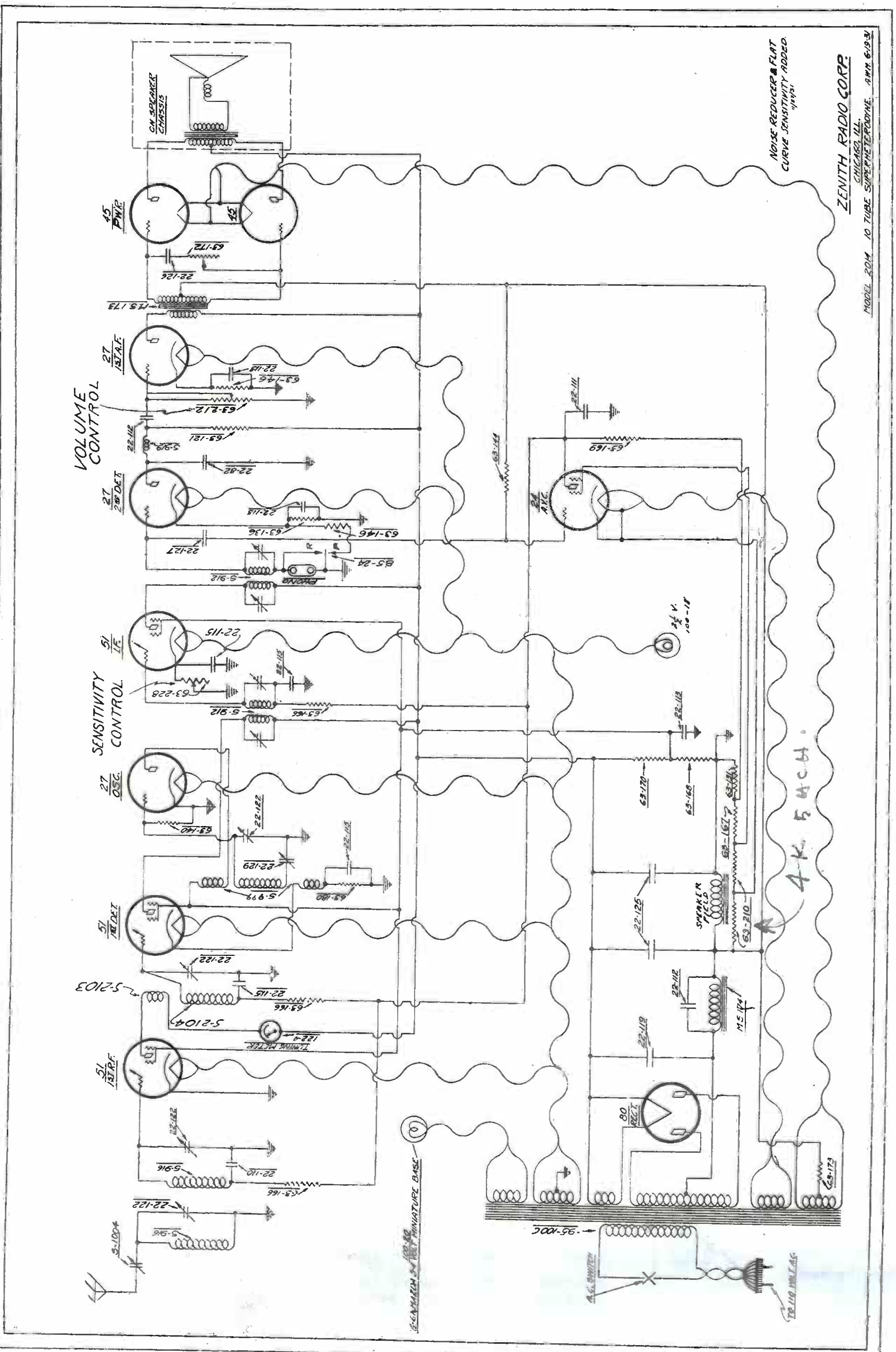

4K such.

—CIRCUIT DIAGRAM—MODELS 91 After No. 375,532, 92 After No. 302,007

The Radio-Craft Library is *now* complete!

Presented on this page are the new books of the RADIO-CRAFT LIBRARY—the most complete and authentic set of volumes treating individually, important divisions of radio. Each book has been designed to give radio men the opportunity to specialize in one or more of the popular branches of the industry. The material contained in these books will increase your knowledge; you will find them a real help in your work and they will contribute to your money earning capacity. Read these books during your spare time at home.

The authors of these books are well-known to everybody. Each one is an expert radio man; an authority on the subject—each is thoroughly familiar with the field which he represents.

This is perhaps the first real opportunity that you have ever had to build a radio library of books that are authentic, right-up-to-the-minute and written so that they are easily digested and clearly understood. Mail coupon below for your books.

TO THE RIGHT WILL BE FOUND A SHORT RESUME OF EACH BOOK

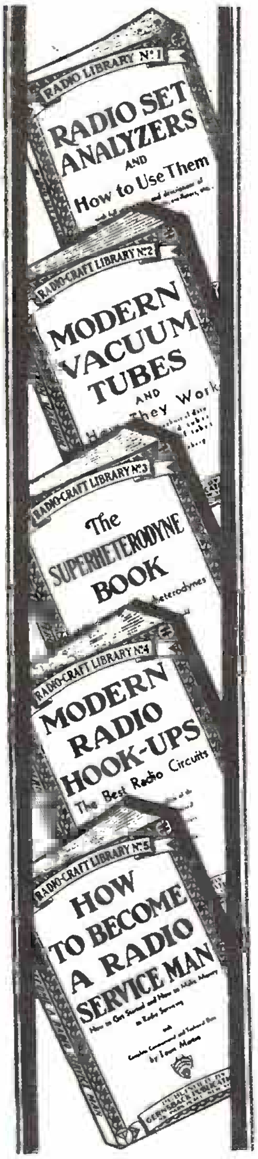

Book No. 1

RADIO SET ANALYZERS

And How To Use Them

With Full Instructions and Descriptions of Set Analyzers, Tube Checkers, Oscillators, Etc.

By L. VAN DER MEL

This book explains thoroughly the operation of set analyzers, tube checkers, oscillators and other testing equipment. For every radio man this book is extremely helpful. It covers every phase of testing and gives you valuable short cuts; completely illustrated with photographs and diagrams to facilitate the use of modern testers.

Book No. 2

MODERN VACUUM TUBES

And How They Work

With complete Technical Data on All Standard and Many Special Tubes

By ROBERT HERTZBERG

MODERN VACUUM TUBES describes the fundamental electron theory which is the basis of all vacuum tube operation, and goes progressively from the simplest two-element tubes right up to the latest pentodes and thyratrons. It is written in clear, simple language and is devoid of the mathematics which is usually so confusing. Valuable reference, charts and characteristic curves of standard and special tubes are to be found, also diagrams of sockets and pin connections.

Book No. 3

THE SUPERHETERODYNE BOOK

All About Superheterodynes

How They Work, How to Build and How to Service Them

By CLYDE FITCH

There is no more fascinating a subject in the large array of radio circuits than the famous superheterodyne circuit. Whether you are a Service Man or experimenter, first-hand knowledge about the construction of superheterodyne receivers is very important. The book on Superheterodynes gives underlying principles of their construction, right from the very first set made.

Book No. 4

MODERN RADIO HOOK-UPS

The Best Radio Circuits

A Complete Compendium of the Most Important Experimental and Custombuilt Receivers

By R. D. WASHBURNE

It is fascinating to the experimenter, or even to the up-to-date Service Man, to take a commercial set and to change it into one using a famous hookup that is not found in any manufactured set. Many excellent circuits have never been commercialized, but limited only to homeset builders. Thousands of these popular circuits have been requested from time to time, and in this book we have included over 150 circuits, which include the famous Peridyne, Cash-Box A.C.-D.C. Set and others.

Book No. 5

HOW TO BECOME A RADIO SERVICE MAN

How to Get Started and How to Make Money in Radio Servicing

By LOUIS MARTIN

The ambition of many men in radio today is to become a first-grade Service Man. It is not as difficult as one might believe, but it cannot be done in a few short months. Following very carefully the advice of Mr. Martin, who has dealt with the problems of thousands of Service Men, this book deals very carefully with the essential stages in the preparation for qualifying as a Service Man.

Book No. 6

BRINGING ELECTRIC SETS UP TO DATE

With Pentodes, Multi-Mus, Dynamic Speakers—Complete Information How to Modernize A. C., D. C. and Battery Operated Receivers

By CLIFFORD E. DENTON

In this country there are over ten million electrically operated receivers that could be modernized—by placing in them new type tubes, new speaker equipment and other modern improvements. This business of improving old sets can go to the experimenters and Service Men if they will quickly jump into action.

Read in this book by Mr. Denton, how easily you can modernize any obsolete set, and with little additional costs.

Book No. 7

RADIO KINKS AND WRINKLES

For Service Men and Experimenters

A Complete Compendium on the Latest Radio Short-Cuts and Money-Savers

By C. W. PALMER

It often becomes necessary for experimenters and Service Men to call upon their memory for some short cut or radio wrinkle that will solve a problem quickly. In business, "short cuts" mean time and money saved, and to the Service Man "time saved" means money earned.

This book is a compilation of important radio kinks and wrinkles and discusses only such items as are constantly used today.

Book No. 8

RADIO QUESTIONS AND ANSWERS

A Selection of the Most Important of 5,000 Questions Submitted by Radio Men During the Course of One Year

By R. D. WASHBURNE

There have been collected a wide variety of questions which have come into our editorial offices during the past two years, and only those whose answers would benefit the majority of men engaged in radio have been incorporated in this amazing question and answer book. A tremendously long list of topics is treated.

Book No. 9

AUTOMOBILE RADIO AND SERVICING

A Complete Treatise on the Subject Covering All Phases from Installing to Servicing and Maintenance

By LOUIS MARTIN

Automobile radios are up and coming, and someone has to service them properly. It therefore behooves you to read this immensely important new book on the art of Automobile Radio. The book is concise, and full of illustrations, photographs, diagrams and hookups.

A few of the really interesting chapters: Introduction; Automotive Radio Installations; Complete Descriptions of Commercial Automotive Receivers; Servicing Automotive Receivers; The Ignition System; General Service Considerations; Effects of Temperature on Power Supply; Conclusion.

Book No. 10

HOME RECORDING AND ALL ABOUT IT

A Complete Treatise on Instantaneous Recordings, Microphones, Recorders, Amplifiers, Commercial Machines, Servicing, etc.

By GEORGE J. SALIBA

If there is one subject that is fascinating to every radio man, it is that of Home Recording. Of course, this volume is not all on "Home" recording, but the information contained therein is important to commercial radio men, studio operators, engineers and others interested in this phase of radio.

The art of recording and reproducing broadcast selections is becoming more important every day to radio men, experimenters and Service Men. Equipping dance halls, auditoriums, churches, restaurants and homes with public address systems and amplifiers brings many extra dollars and often an excellent income.

BIG DISCOUNT OFFERED

In order to make it possible for everyone to buy these books, the fifty (50) cents price has been made uniform for all volumes. You can buy these books separately, but you should take advantage of our special offer:

When Five (5) Books or More Are Ordered Deduct 20% from Your Remittance

Simply fill in the coupon below, and mail it to us together with your remittance. Checks, stamps or money orders accepted.

ALL BOOKS UNIFORM

The books in the new RADIO-CRAFT LIBRARY are all strictly up-to-date, and written by men who know their subjects. The volumes are all uniform size, 6x9 inches, and contain on an average of 50 to 120 illustrations. Each book is printed on fine book paper, and no expense has been spared to make it an outstanding value, for its editorial contents as well as from the mechanical standpoint.

Clip Coupon and Mail Today!

GERNSBACK PUBLICATIONS, INC., 96-98 Park Place, New York, N. Y.

I have circled below the numbers of books in the RADIO-CRAFT LIBRARY, which you are to send me, and have deducted 20% for ordering five (5) books or more. I have included my remittance in full, at the price of 50c each, when less than five books are ordered.

The amount of my remittance is........................(Stamps, checks or money orders accepted.)

Circle numbers wanted: 1 2 3 4 5 6 7 8 9 10

Name .... Address ....

City .... State ....MA

ZENITH RADIO CORPORATION

SEE 1932 page 576-1 FOR PARTS

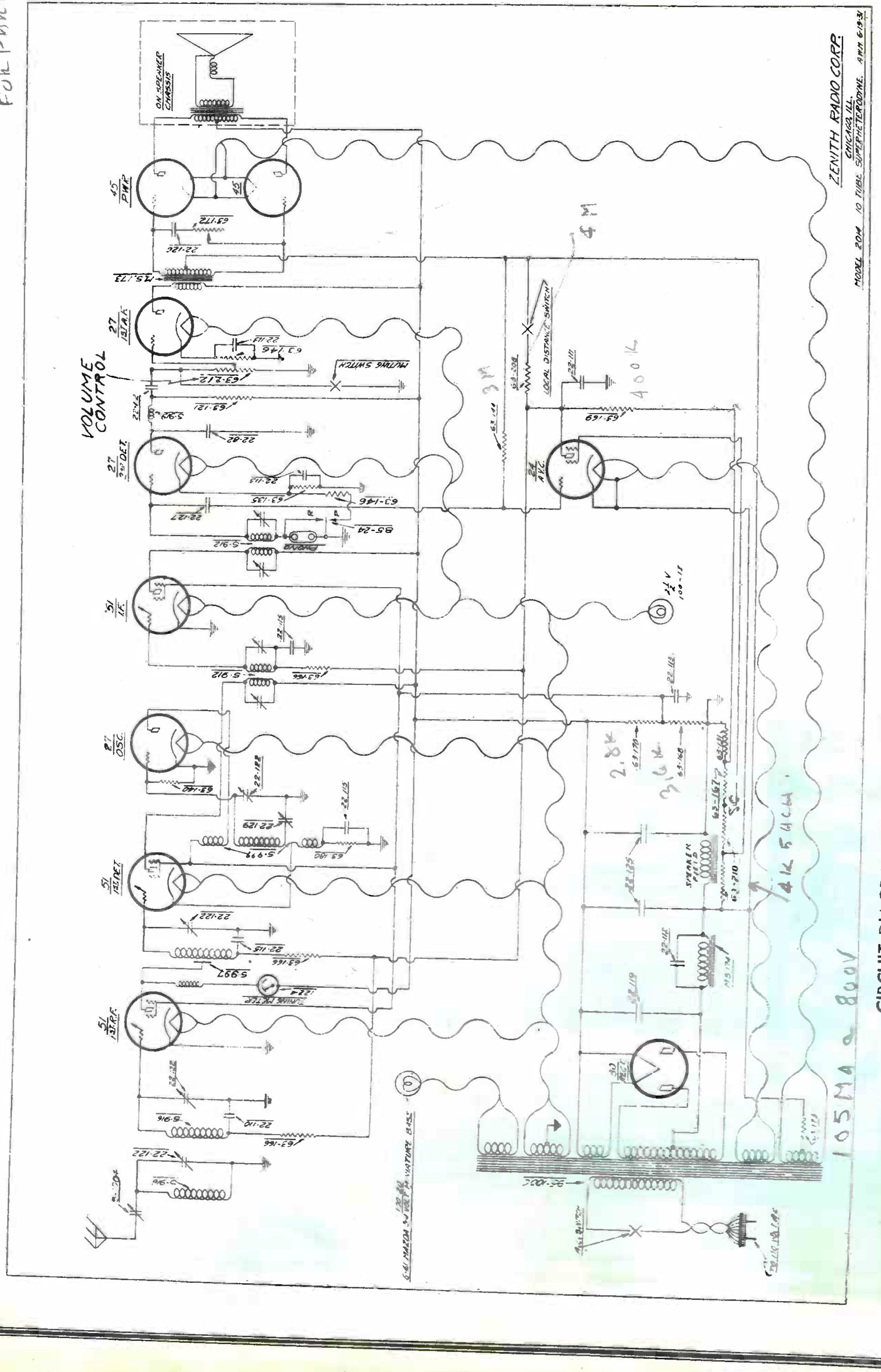

CIRCUIT DIAGRAM — MODELS 91-92 (Serial Nos. after 373,334 and 301,394 respectively)

Let these eminent Radio authors guide you through your service work for 1933

The importance of radio Service Men may be appreciated when it is realized that of the 30,000,000 radio sets in the world, half of that number are in this country. These 15,000,000 sets must be serviced, *and the radio Service Men are the only ones that can do it.*

RADIO-CRAFT is printed for the Service Man. It is published to give the Service Man the latest and most valuable service information that can possibly be obtained by anyone. It is *the* magazine to read if you want to be successful in the radio service field.

The list of contributors shown at the right represent the finest array of authorities on radio servicing on the staff of *any* publication. They are working continually for *your* benefit, and each is an expert in his own field.

Why not buy a copy and judge for yourself? Or better still, write for a miniature copy,—just enclose a 3c stamp. Once you read RADIO-CRAFT, we know you will ask for more.

As you are a Service Man, and an owner of the 1933 OFFICIAL RADIO SERVICE MANUAL, you can take advantage of this opportunity. We shall send RADIO-CRAFT for One Year at the Special Rate of $2.00 (Canadian or foreign $2.50) . . . . this is a saving of 33⅓% of the regular newsstand rate for a year. Send remittance in stamps, check or money order to

RADIO-CRAFT MAGAZINE

96-98M PARK PLACE NEW YORK, N. Y.

Radio-Craft
FOR THE
SERVICE MAN · DEALER · RADIOTRICIAN

●

Editors of RADIO-CRAFT

HUGO GERNSBACK
Editor-in-Chief

LOUIS MARTIN
Associate Editor

R. D. WASHBURNE
Technical Editor

●

Contributors to RADIO-CRAFT

BERTRAM FREED
ROBERT HERTZBERG
BERYL B. BRYANT
McMURDO SILVER
C. W. PALMER
F. L. SPRAYBERRY
CLYDE FITCH
H. G. CISIN
C. H. W. NASON
DR. FRITZ NOACK
ARTHUR H. LYNCH
JACK GRAND
L. VAN DER MEL

●

ZENITH RADIO CORPORATION

MODELS AH-CH-RH

No. 3A

The Zenette Superheterodyne Circuit

The Zenette Superheterodyne circuit, in addition to the fundamental Superheterodyne principle, employs many modifications and refinements which are largely responsible for its excellent performance. Among these are the R. F. amplifier, automatic volume control, pentode output tube, and the use of a very desirable intermediate frequency, namely, 175 kilocycles. Multi-Mu tubes are employed in the R. F., 1st detector and I. F. amplifier which practically eliminates any possibility of cross-modulation and permits easier volume control. The Zenette circuit employs the following tubes in their respective locations:

R. F.—Z51 Multi-Mu
Oscillator—Z27
2nd detector—Z27
Automatic volume control—Z24 screen grid
1st detector—Z51 Multi-Mu
I. F.—Z51 Multi-Mu
Power output—Z47 Pentode
Rectifier—Z80

A thorough understanding may be had by following the receiver function from the antenna. First, we have a compensating condenser which adapts the set to the individual antenna on which it is to be used. This is accomplished by adjustment after the set has been installed. The grid circuit of the 1st or R. F. stage is tuned by the usual condenser and coil method. The R. F. output circuit is capacity coupled to the first detector by a single band of bus-bar wire around the first detector tuning coil, with an R. F. reactor provided in the plate lead. Tuning of the first detector is accomplished by a condenser and coil similar to that of the R. F. stage, tuned to the frequency of the incoming signal.

The oscillator consists essentially of a grid coil, plate coil and condenser connected so as to generate a carrier wave. The tuning of the oscillator circuit follows that of the R. F. and detector circuits by a difference of 175 K.C. at all times. Coupling between the oscillator and 1st detector is obtained through a third or pick-up coil placed on the same form as the oscillator grid and plate coils. This pick-up coil is in series with the 1st detector cathode and its bias resistor.

In order to maintain the 175 K.C. difference between the oscillator and the other circuits, the oscillator grid coil is of a lower inductance and has a fixed condenser of .001 mfd. in series with its tuning condenser. The series condenser is shunted by a trimmer in order to make slight variation in its capacity. With its use the tuning condenser is brought to resonance at the low frequency end of the dial.

The carrier provided by the oscillator tube mixes with the incoming signal in the 1st detector tube whose plate circuit is tuned to 175 kilocycles. A trimmer condenser across the 1st detector plate coil provides a method of precisely tuning the coil to that frequency. The plate coil is inductively coupled to the following grid coil and similar to it in physical dimensions. This coil is also provided with a vernier condenser for exact peaking. The I. F. tube passes the signal through a second intermediate transformer similar to that described. The signal is then detected or rectified by the second detector at the I. F. frequency. This detector is resistance coupled to the output, or Pentode tube. The Pentode tube has a fourth element somewhat similar to the grid of an ordinary tube which is supplied with a positive voltage from the same source which feeds its plate.

It should be noted that the voltage dividing system is grounded at the point where the 63-151 and 63-157 resistors join. All circuit voltages excepting the automatic volume control operate at positive potential with respect to this ground. In the case of the automatic volume control tube, its plate and screen voltages are positive with respect to the negative power supply lead, but are negative with respect to ground.

The R. F., 1st detector and I. F. grid returns are combined and connect to the plate of the automatic volume control tube. As a signal is impressed on its grid the plate current rises causing a change in voltage across the plate resistor (63-139). This change in voltage in addition to the drop across the (63-157) resistor varies the bias voltage of the three tubes mentioned.

In the filter circuit a choke is provided in the positive lead while the speaker field acts as a choke in the negative lead. A high voltage (500) and a low voltage (430) Electrolytic condensers complete the essential filter system. A portion of the voltage drop across the speaker field is used for the power tube bias.

WARNING: **A very high voltage exists between the two Electrolytic containers and for that reason extreme care should be used when handling the chassis during service.**

The New HAMMARLUND CATALOG is "Paradise" *for* SHORT-WAVE Workers!

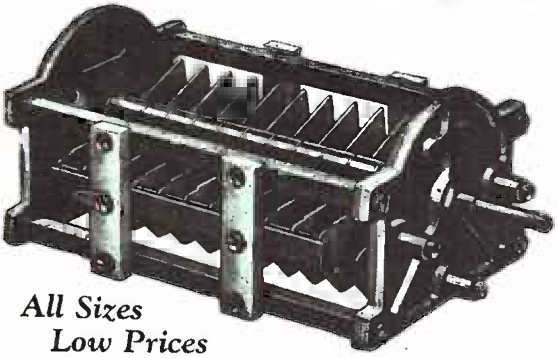
All Sizes
Low Prices

TRANSMITTING CONDENSERS

Heavy, polished aluminum plates, with rounded edges. 10 per cent wider spacing than others. Lowest-loss Isolantite insulation. Rigid, cast aluminum alloy frame. Perfect-fitting bearings. Smooth, self-cleaning rotor contact.

Double-Spaced MIDGET CONDENSERS For Ultra High Frequencies

May be used for either receiving or transmitting. Wide spacing between plates aids frequency stability. Isolantite insulation for the low losses necessary in five-meter work. Ideal for five-meter transmitters using tubes up to 245's or 210's in push-pull.

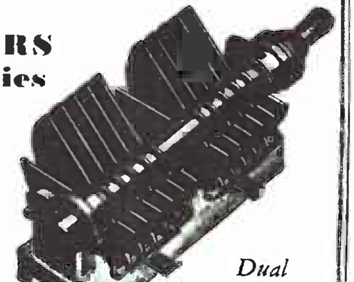
Dual and Single Models

ISOLANTITE R. F. CHOKES

Designed especially for short-wave and ultra short-wave receivers and transmitters, but equally efficient in the regular broadcast band. Very compact. Easily mounted or suspended. Isolantite form. Moisture-proof windings.

ISOLANTITE SOCKETS and COIL FORMS

Sockets have Isolantite base and perfect spring contacts. Low losses and noiseless. 4, 5 and 6 prongs. Isolantite Coil Forms for Ultra Short-Waves. Low loss. No drilling. Five prongs for standard sockets. Also, similar forms, with 4, 5 and 6 prongs for standard short-waves.

INTERMEDIATE FREQUENCY TRANSFORMERS

Similar to those used in the famous "COMET" Superheterodyne. Litz wound. Wax impregnation. Tuned by adjustable condensers with mica dielectric and Isolantite base. Shield, 23/32" wide by 4½" high, for base mounting.

For Better Radio
Hammarlund
PRECISION
PRODUCTS

Mail Coupon for Complete Catalog

HAMMARLUND MFG. CO.
424-438 W. 33rd St., New York
Please send me a copy of your new catalog.

Name...

Address..

....OM-33

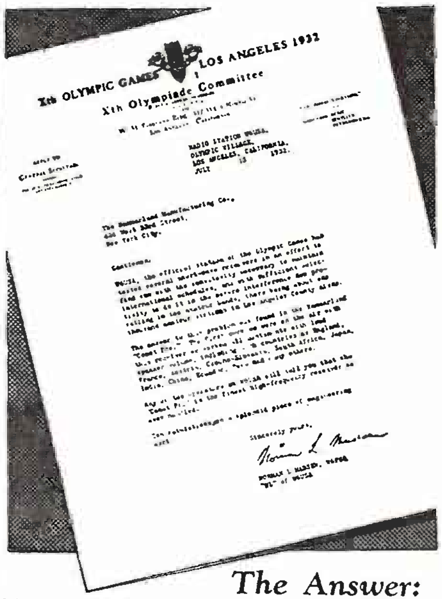

Xth OLYMPIC GAMES LOS ANGELES 1932
Xth Olympiade Committee

RADIO STATION W6USA,
OLYMPIC VILLAGE,
LOS ANGELES, CALIFORNIA.
JULY 13 1932.

The Answer: "COMET 'PRO'"

"We tested several short-wave receivers to find one with the sensitivity to maintain international schedules, and sufficient selectivity for the severe interference now prevailing, there being about 1,000 amateur stations in Los Angeles County alone. The answer was the "Comet Pro." We work all continents with loudspeaker volume, including England, France, Austria, Czecho-Slovakia, South Africa, Japan, India, China, Ecuador, Peru and many others. Any operator at W6USA will tell you that the "Comet Pro" is the finest high-frequency receiver he ever handled. Congratulations on a splendid piece of engineering."

NORMAN L. MADSEN,
Operator, W6USA,
Official Station of the Olympic Games.

Due to recent tube developments, the new model "PRO" is even MORE selective. Delivers FULL LOUDSPEAKER VOLUME. Increased intermediate amplification, with greater stability. Smooth operation on 10 to 20 megacycle band. More effective shielding. New METAL cabinet removes all stray influences. Wood cabinet optional. A. C. and Battery Models. A REALLY GREAT RECEIVER.

Mail Coupon for 16-page Folder

The COMET *Custom-Built* "PRO" *by* HAMMARLUND

HAMMARLUND MFG. CO.
424 W. 33rd St., New York
Please send me 16-page illustrated folder, describing the COMET "PRO" Short-Wave Superheterodyne.

Name...

....

....OM-33

ZENITH RADIO CORPORATION

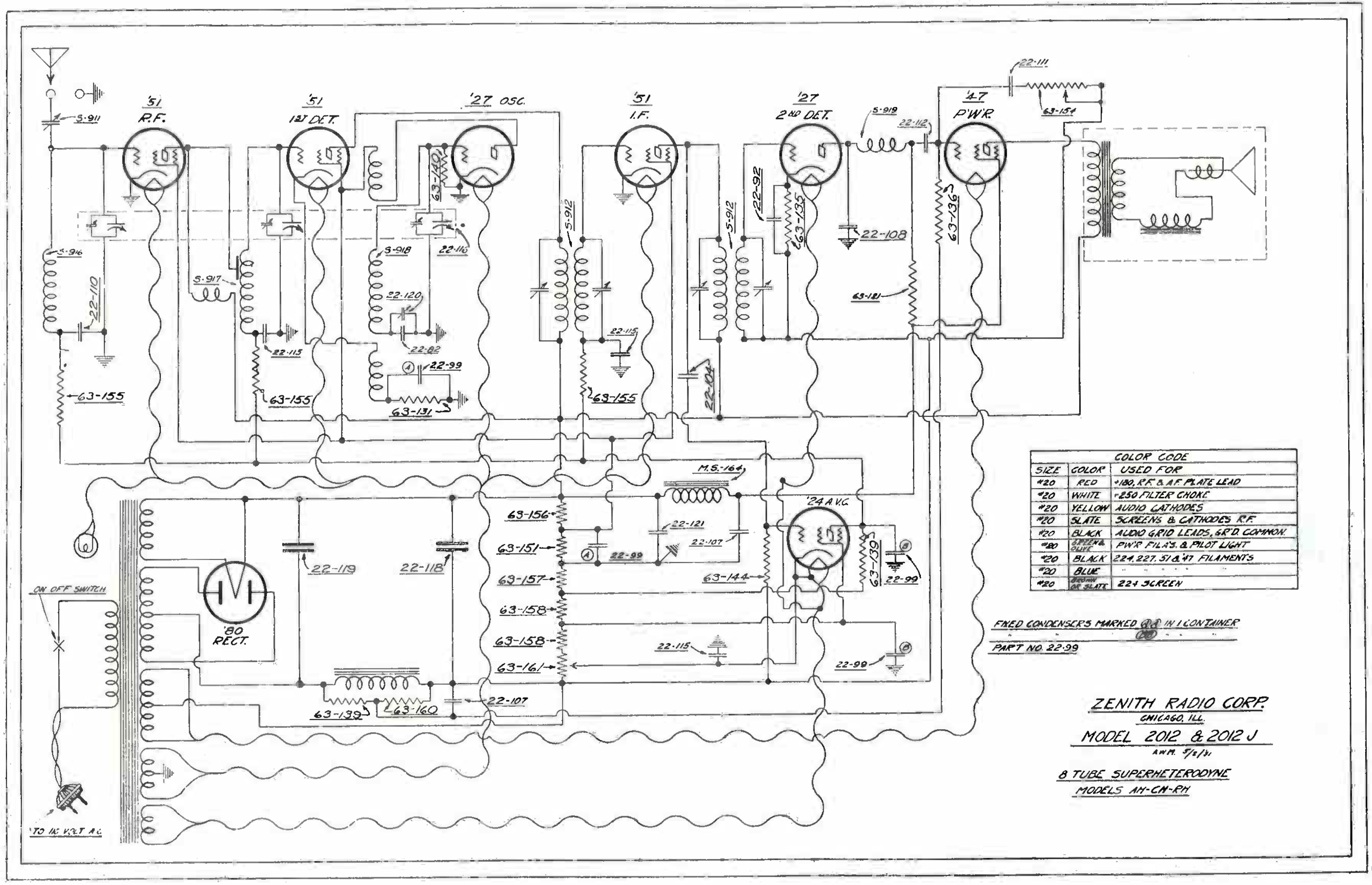

COLOR CODE		
SIZE	COLOR	USED FOR
#20	RED	+180, R.F. & A.F. PLATE LEAD
#20	WHITE	+250 FILTER CHOKE
#20	YELLOW	AUDIO CATHODES
#20	SLATE	SCREENS & CATHODES R.F.
#20	BLACK	AUDIO GRID LEADS, GR'D. COMMON.
#20	GREEN & OLIVE	PW'R FILA'S. & PILOT LIGHT
#20	BLACK	224, 227, 51 & 47 FILAMENTS
#20	BLUE	" " " "
#20	BROWN OR SLATE	224 SCREEN

FIXED CONDENSERS MARKED (A)(A) IN 1 CONTAINER
" " " (B)(B) " " "
PART NO. 22-99

ZENITH RADIO CORP.
CHICAGO, ILL.
MODEL 2012 & 2012 J
A.W.H. 5/2/31
8 TUBE SUPERHETERODYNE
MODELS AH-CH-RH

Radio Service Men

MEMBERSHIP
AS OF OCT. 1, 1932
16,205

To MANUFACTURERS, DISTRIBUTORS, JOBBERS and DEALERS

If in need of Service Men wire or write us and we will send you the name and address of Service Men in your city or vicinity.

THIS SERVICE IS FREE TO THE RADIO TRADE.

Official Radio Service
Men's Association, Inc.
98 Park Pl., New York, N.Y.

JOIN THE ORSMA

EVER since the appearance of the commercial radio broadcast receiver as a household necessity, the Radio Service Man has been an essential factor in the radio trade; and, as the complexity of electrical and mechanical design in receivers increases, an ever-higher standard of qualifications in the Service Man becomes necessary.

The necessity, also, of a strong association of the technically-qualified Radio Service Men of the country is forcing itself upon all who are familiar with radio trade problems; and their repeated urging that such an association must be formed has led us to undertake the work of its organization.

This is the fundamental purpose of the OFFICIAL RADIO SERVICE MEN'S ASSOCIATION, which is not a money-making institution, or organized for private profit; to unite, as a group with strong common interests, all well qualified Radio Service Men; to make it readily possible for them to keep up with the demands of their profession; and, above all, to give them a recognized standing in that profession, and acknowledged as such by radio manufacturers, distributors and dealers.

To give Service Men such a standing it is obviously necessary that they must prove themselves entitled to it; any Service Man who can pass the examination necessary to demonstrate his qualifications will be accepted as a member and a card will be issued to him under the seal of this Association, which will attest his ability and prove his identity.

The terms of the examination have been drawn up in co-operation with a group of the best-known radio manufacturers, as well as the foremost radio educational institutions.

We shall not attempt to grade the members into different classes. A candidate will be adjudged as either passing or not passing. If the school examining the papers passes the prospective member as satisfactory, we shall issue to him an identification card with his photograph.

If the candidate does not pass this examination the first time, he may apply for another examination three or six months later.

There is absolutely no cost attached to any service rendered by the Association to its members, no dues, no contributions.

If you wish to become a member, just fill out the coupon below and mail it to us. We will send you all the papers necessary to become a member.

The following firms have cooperated with us in formulating the examination papers:

The Crosley Radio Corporation, Cincinnati, Ohio. Mr. D. J. Butler, Service Mgr.
Grigsby-Grunow Company (Majestic), Chicago, Ill. Mr. L. G. Wilkinson, Service Mgr.
Stromberg-Carlson Telephone Mfg. Co., Rochester, N. Y. Mr. E. S. Browning, Service Mgr.
Colin B. Kennedy Corp., South Bend, Ind. Mr. B. F. McNamee, Prod. Mgr.
RCA-Victor Company, Inc., Camden, N. J. Mr. H. C. Grubb, Vice-President.
Stewart-Warner Corporation, Chicago, Ill. Mr. T. N. Golten, Service Mgr.

The schools who have consented to act as an examination board are:

International Correspondence Schools, Scranton, Penna. Mr. D. E. Carpenter, Dean.
RCA Institutes, Inc., New York, N. Y. Mr. D. O. Whelan, President.
East Bay Radio Institute, Oakland, Calif. Mr. T. T. Tonnehilt, Director.
Radio Training Association of America, Chicago, Ill. Mr. A. G. Mohaupt, President.
Radio College of Canada, Toronto, Canada. Mr. J. C. Wilson, President.
Radio Division, Coyne Electrical School, Chicago, Ill. Mr. H. C. Lewis, President.

Date 1/28/32
OFFICIAL RADIO SERVICE
MEN'S ASSOCIATION

This certifies that
Harold Tuttle
who has satisfactorily proved his technical qualifications as a Radio Service Man, by passing the examination of this Association, has been accepted as a member of the
OFFICIAL RADIO SERVICE MEN'S ASSOCIATION
and that we commend him to the Radio Trade, and to the owners of radio receivers, as a duly qualified Service Man.

(Member's Signature)

Secretary, Official Radio Service Men's Assoc.

No 6843

MAIL COUPON TODAY!

OFFICIAL RADIO SERVICE MEN'S ASSOCIATION, Inc. MA
98 Park Place, New York, N. Y.

I wish to become a member of your Association. Please mail me the examination papers and application blanks.

Name ....

Address ....

Town .... State ....

A NEW SERVICE

FOR ALL RADIO SERVICE MEN

Here is big news for every Radio Service Man. If you want diagrams of commercial radio receivers, we are now prepared to give you

RUSH SERVICE

In the three OFFICIAL RADIO SERVICE MANUALS published by us so far, we are listing almost 5,000 diagrams of commercial radio sets manufactured in America.

Heretofore, you could get these diagrams only by buying our OFFICIAL RADIO SERVICE MANUALS.

We have, however, had an increasing demand of late from Service Men who are not owners of any of the MANUALS but who wish to get one or more diagrams. We are now prepared to send you such diagrams on a rush order plan. We realize that if you want one of these diagrams *you want it quick*. For that reason, we now have a special staff to send any special diagram to you *the same day that your order is received.*

If you live a distance away from us, and cannot wait for the regular mail, send us 8 cents extra, and the diagram will be sent to you by Air Mail.

These diagrams come to you on bond paper, size 9x12 inches. We are prepared to furnish practically any diagram you possibly can ask for—IMMEDIATELY.

HOW TO ORDER

Just tell us what diagram you want, giving us the name of the radio set and model number. It is absolutely necessary for us to have the model number, as without this there is no way of identifying the set. A mere description of the receiver or a list of the tubes it uses is of no help. We will immediately mail you the diagram, if it is available, the same day your order is received. NOTE: Question coupons are not acceptable for these diagrams.

WE HAVE A UNIFORM CHARGE FOR THIS SERVICE AND THAT IS 25c FOR EACH DIAGRAM . . . .

25c
a diagram

If you wish more than one diagram, the price is still 25c each, but if you order *six* at one time, the price will be $1.00 for the six, providing all are ordered at one time.

GERNSBACK PUBLICATIONS : INC.
(*Special Diagram Department*)
96-98M PARK PLACE NEW YORK, N. Y.

INDEX

1931, 1932 and 1933 Manuals

The Index which follows includes all diagrams in the 1931, 1932 and 1933 Manuals, the supplements to the 1931 Manual and the first three supplements to the 1932 Manual. The three additional supplements to the latter, which will appear after the 1933 Manual is published, will carry their own indexes.

Please read the notices at the top of each index page. You will note that the diagrams in the 1931 and 1932 Manuals and their supplements are listed together, while the diagrams in the 1933 Manual are listed separately under the heading "1933 Manual." To distinguish the diagrams in the 1931 and 1932 Manuals and their supplements, the following notations are used: One asterisk (*) before page number indicates 1931 Manual; Two asterisks (**) before page numbers indicate supplements to the 1931 Manual; No asterisks indicate 1932 Manual or its supplements.

The index to the 1933 Manual, which is listed separately, includes not only diagrams but also service notes appearing in the first or text part of the book, which includes all pages up to number 350. In other words, where a set is listed as appearing on several pages, all of the page numbers below 350 indicate service notes pertaining to that particular set. The reader should look through both indexes, as the diagram may appear in the 1931 or 1932 Manuals and the 1933 Manual may contain helpful service information on the same set.

PLEASE NOTE!

Under the headings "1931 and 1932 Manuals," page numbers preceded by one asterisk (*) are in the 1931 manual. Page numbers preceded by two asterisks (**) are in the supplements to the 1931 manual. Page numbers without any asterisks are in the 1932 manual or its supplements.

PLEASE NOTE!

Under the headings "1931 and 1932 Manuals," page numbers preceded by one asterisk (*) are in the 1931 manual. Page numbers preceded by two asterisks (**) are in the supplements to the 1931 manual. Page numbers without any asterisks are in the 1932 manual or its supplements.

PLEASE NOTE!

Under the headings "1931 and 1932 Manuals," page numbers preceded by one asterisk (*) are in the 1931 manual. Page numbers preceded by two asterisks (**) are in the supplements to the 1931 manual. Page numbers without any asterisks are in the 1932 manual or its supplements.

PLEASE NOTE!

Under the headings "1931 and 1932 Manuals," page numbers preceded by one asterisk (*) are in the 1931 manual. Page numbers preceded by two asterisks (**) are in the supplements to the 1931 manual. Page numbers without any asterisks are in the 1932 manual or its supplements.

PLEASE NOTE!

Under the headings "1931 and 1932 Manuals," page numbers preceded by one asterisk (*) are in the 1931 manual. Page numbers preceded by two asterisks (**) are in the supplements to the 1931 manual. Page numbers without any asterisks are in the 1932 manual or its supplements.

PLEASE NOTE!

Under the headings "1931 and 1932 Manuals," page numbers preceded by one asterisk (*) are in the 1931 manual. Page numbers preceded by two asterisks (**) are in the supplements to the 1931 manual. Page numbers without any asterisks are in the 1932 manual or its supplements.

PLEASE NOTE!

Under the headings "1931 and 1932 Manuals," page numbers preceded by one asterisk (*) are in the 1931 manual. Page numbers preceded by two asterisks (**) are in the supplements to the 1931 manual. Page numbers without any asterisks are in the 1932 manual or its supplements.

PLEASE NOTE!

Under the headings "1931 and 1932 Manuals," page numbers preceded by one asterisk (*) are in the 1931 manual. Page numbers preceded by two asterisks (**) are in the supplements to the 1931 manual. Page numbers without any asterisks are in the 1932 manual or its supplements.

PLEASE NOTE!

Under the headings "1931 and 1932 Manuals," page numbers preceded by one asterisk (*) are in the 1931 manual. Page numbers preceded by two asterisks (**) are in the supplements to the 1931 manual. Page numbers without any asterisks are in the 1932 manual or its supplements.