VOLUME I

PERPETUAL TROUBLE SHOOTER'S MANUAL

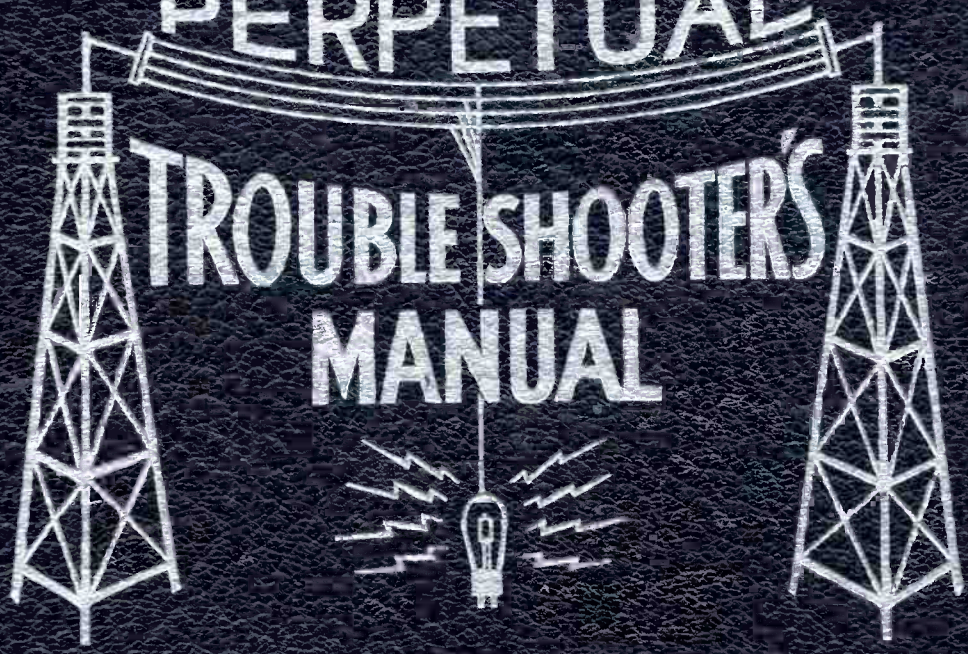

JOHN F. RIDER

www.americanradiohistory.com

McMILLAN RADIO CO.

MODEL "8" Two Types

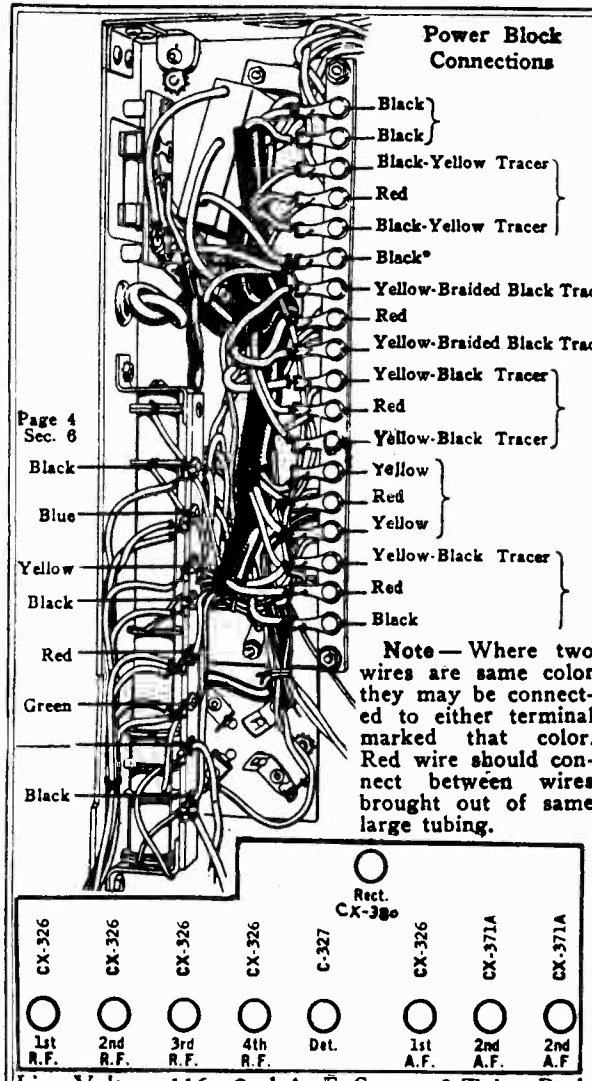

Note — Where two wires are same color they may be connected to either terminal marked that color. Red wire should connect between wires brought out of same large tubing.

Line Voltage 116—2nd A. F. Stage—2 Tubes Push Pull

Tube No in Order	Type of Tube	Position of Tube (1st RF Det etc)	Readings Plug in Socket of Set								
			Tube Out		Tube in Tester						
			A Volts	B Volts	A Volts	B Volts	C Volts	Cathode Volts	Normal Plate M.A.	Plate M.A. Grid Test	Plate M.A. Change
1	226	1st.R.F.	1.55	117	1.5	110	5.5	-	6.5	10.5	4.0
2	226	2nd.R.F.	1.55	117	1.5	110	5.5	-	6.5	10.5	4.0
3	226	3rd.R.F.	1.55	117	1.5	110	5.5	-	6.5	10.5	4.0
4	226	4th.R.F.	1.55	117	1.5	110	5.5	-	6.5	10.5	4.0
5	227	Detector	2.40	125	2.2	25	45	-	1.4	1.4	0.0
6	226	1st.A.F.	1.55	107	1.5	100	7.5	-	3.5	7.0	3.5
7	171A	2nd.A.F.	5.30	170	5.0	158	33	-	18.0	21.0	3.0
8	171A	2nd.A.F.	5.30	170	5.0	158	33	-	18.0	21.0	3.0

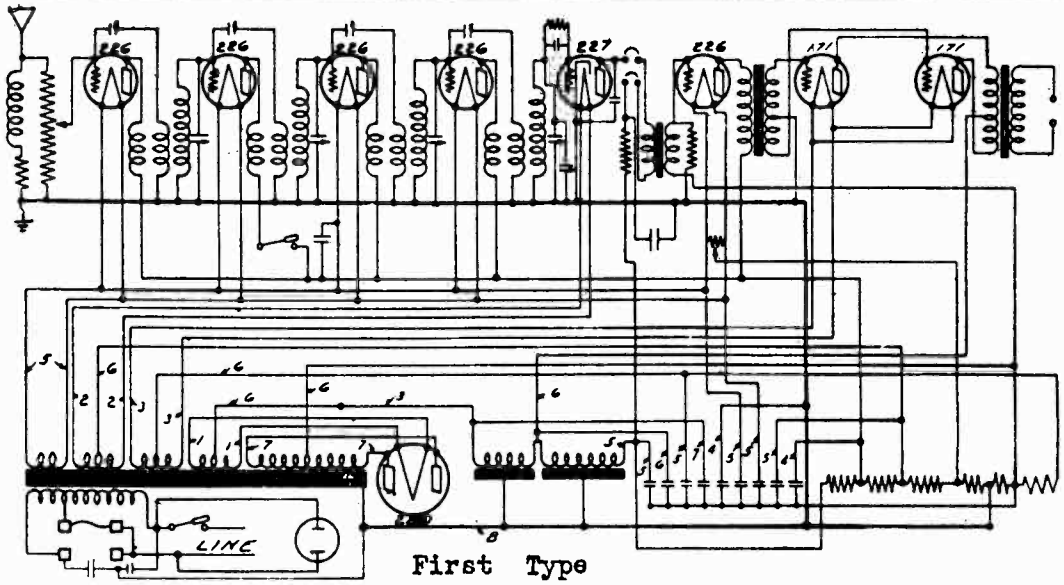

First Type

McMILLAN 8—A. C. POWER SET

Use this circuit diagram for all receivers equipped with a sealed power transformer block, or condenser block not having any brown or slate colored leads.

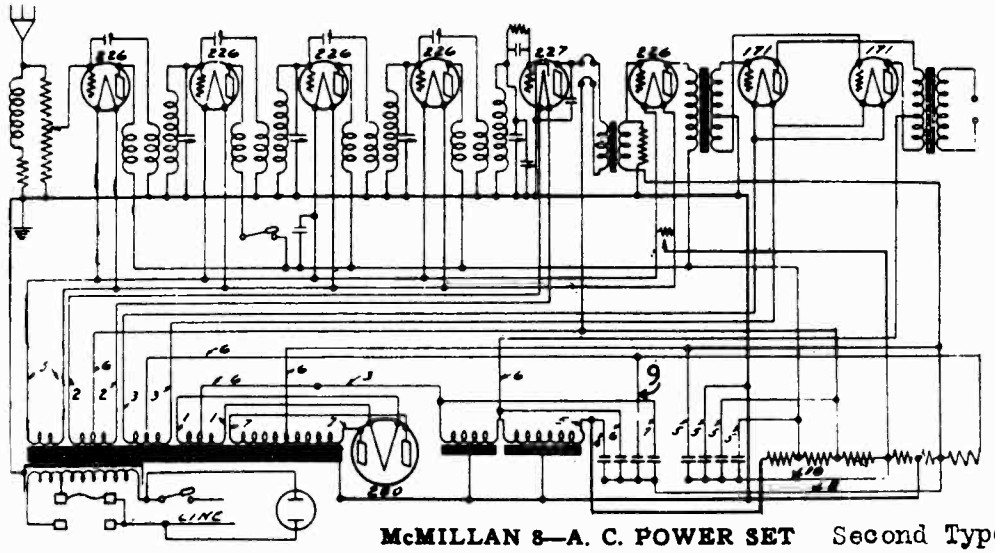

McMILLAN 8—A. C. POWER SET Second Type

Note—Use this circuit diagram for receiver equipped with power blocks having removable covers or condenser blocks having one brown and one slate colored lead

www.americanradiohistory.com

MODEL Series 900

McMILLAN RADIO CO.

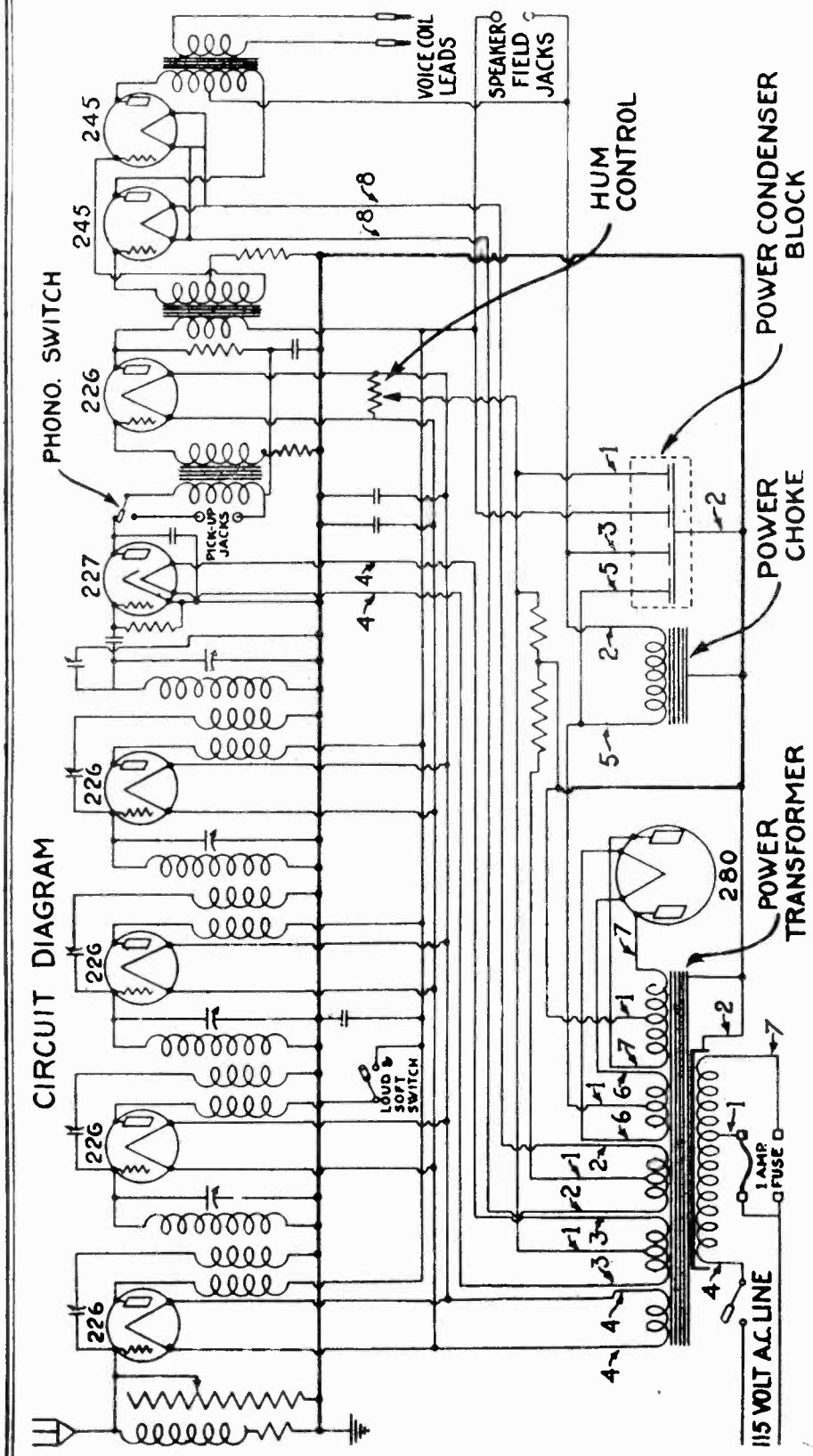

Line Voltage 120—Set on 120 Volt Tap—Volume Control Position Max

Note: "C" Bias Voltage Reading on Audio tubes is low due to the current draw of the set tester and high resistances in the set.

TUBE NO. IN ORDER	TYPE OF TUBE	POSITION OF TUBE	TUBE OUT		READINGS PLUG IN SOCKET OF SET				TUBE IN TESTER					
			A VOLTS	B VOLTS	A VOLTS	B VOLTS	C VOLTS (CONTROL GRID)	CATHODE HEATER VOLTS	NORMAL PLATE M.A.	PLATE CHANGE A GRID TEST	PLATE M.A.	SCREEN GRID VOLTS
1	226	1st RF DET ETC.	1.5	140	1.4	132	10	-	5	9	4	-
2	226	2nd RF	1.5	140	1.4	132	10	-	5	9	4	-
3	226	3rd RF	1.5	140	1.4	132	10	-	5	9	4	-
4	226	4th RF	1.5	140	1.4	132	10	-	5	9	4	-
5	227	Det.	2.6	112	2.3	30	0	10	2	2	0	-
6	226	1st AF	1.5	127	1.4	117	6.5	-	4.5	6.5	3	-
7	245	PP	2.6	260	2.4	246	11.5	-	25	29	4.5	-
8	245	PP	2.5	260	2.4	245	11.5	-	25	29	4.6	-
9	280	Rect.	5.8		4.9				90			
10												

Model AC-5091

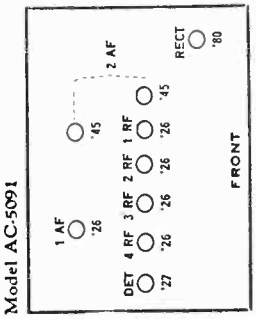

www.americanradiohistory.com

MONTGOMERY-WARD & CO.

MODELS 62-055,49,1522,1922
MODELS 1522,1562
Voltage, Schematic
Chassis,Bottom View

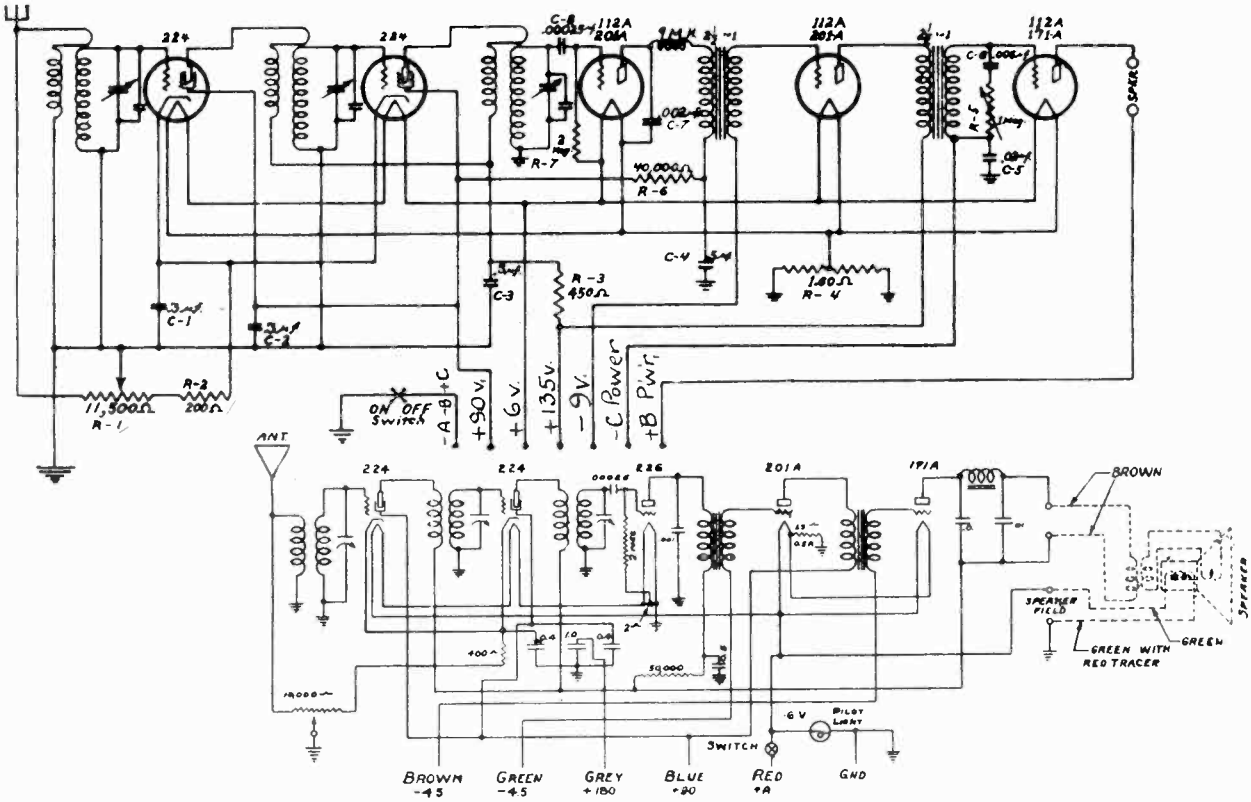

General Description

Not many of these chassis were put out. Because of the high "A" battery consumption, certain changes were suggested that could be made to reduce "A" battery consumption.

Diagram No. 1 gives the original circuit and it will be seen that the tube circuit consists of—

2—224's, 1—226; 1—201A, and 1—171A.

Diagram No. 2 shows the changes to be made so the set will consume less "A" battery current. The tubes are now:

2—NY 64's, or 236's; 2—201A; and 1—112A

The NY 64 tubes are screen-grid battery operated tubes which were designed for use in automobile radio sets. Their current consumption is small, their amplification factor quite high and they are rugged and very long lived.

The "A" and "B" batteries are not changed to convert the receiver for lower "A" battery consumption.

Make the changes shown on the diagram. Connect the storage battery to black (neg.) and red (pos.) leads. Insert two NY 64 tubes in sockets marked 224. Place a 201A in socket marked 226, and one 201A in socket marked 201A. Use a 112A in socket marked 171A. Turn on filament switch and see if tubes light—if so connect "B" batteries as tagged, except "B + 180" lead—connect this to "B + 135" terminal.

Connect two 4½ Volt "C" batteries in series. The "C — 4½" Volt lead goes to the connection between the 4½ Volt "C" batteries. The "C — 45" goes to the 4½ Volt part of the second battery.

It is recommended that these changes not be made on sets where the customer is entirely satisfied with the operation and the life of the "A" battery. The operation with the 224 tubes is very highly satisfactory. The sensitivity is extremely high, and the tone quality very good.

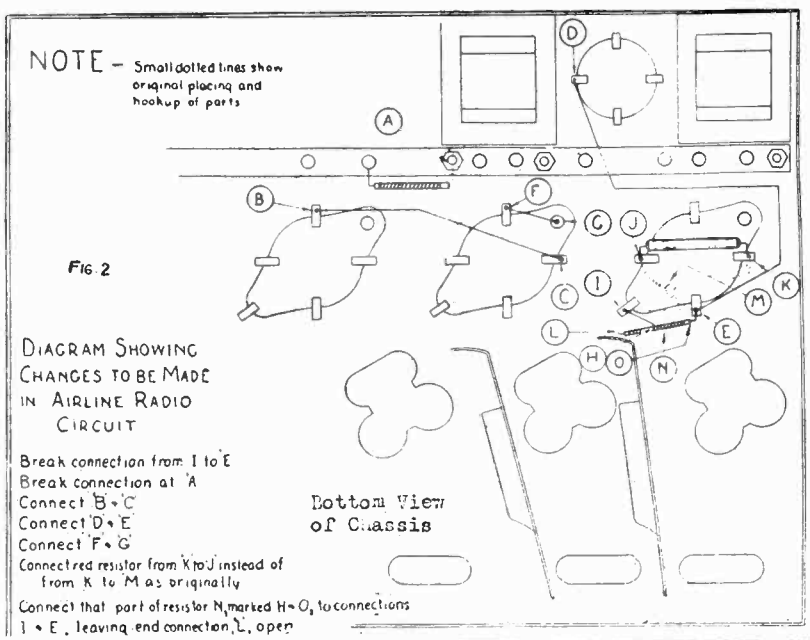

FIG. 2

DIAGRAM SHOWING CHANGES TO BE MADE IN AIRLINE RADIO CIRCUIT

Break connection from I to E
Break connection at A
Connect B + C
Connect D + E
Connect F + G
Connect red resistor from K to J instead of from K to M as originally
Connect that part of resistor N, marked H + O, to connections I + E, leaving end connection L, open

Models 62-055, 49, 1522, 1922 (1930)

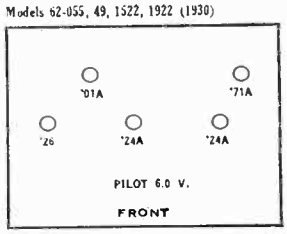

Models 1522, 1562 (1930)

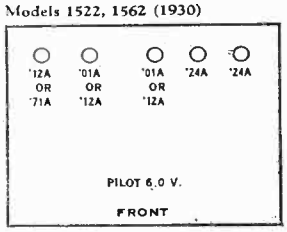

www.americanradiohistory.com

www.americanradiohistory.com

NATIONAL CARBON CO.

MODEL 1,2,3
MODEL 20,21

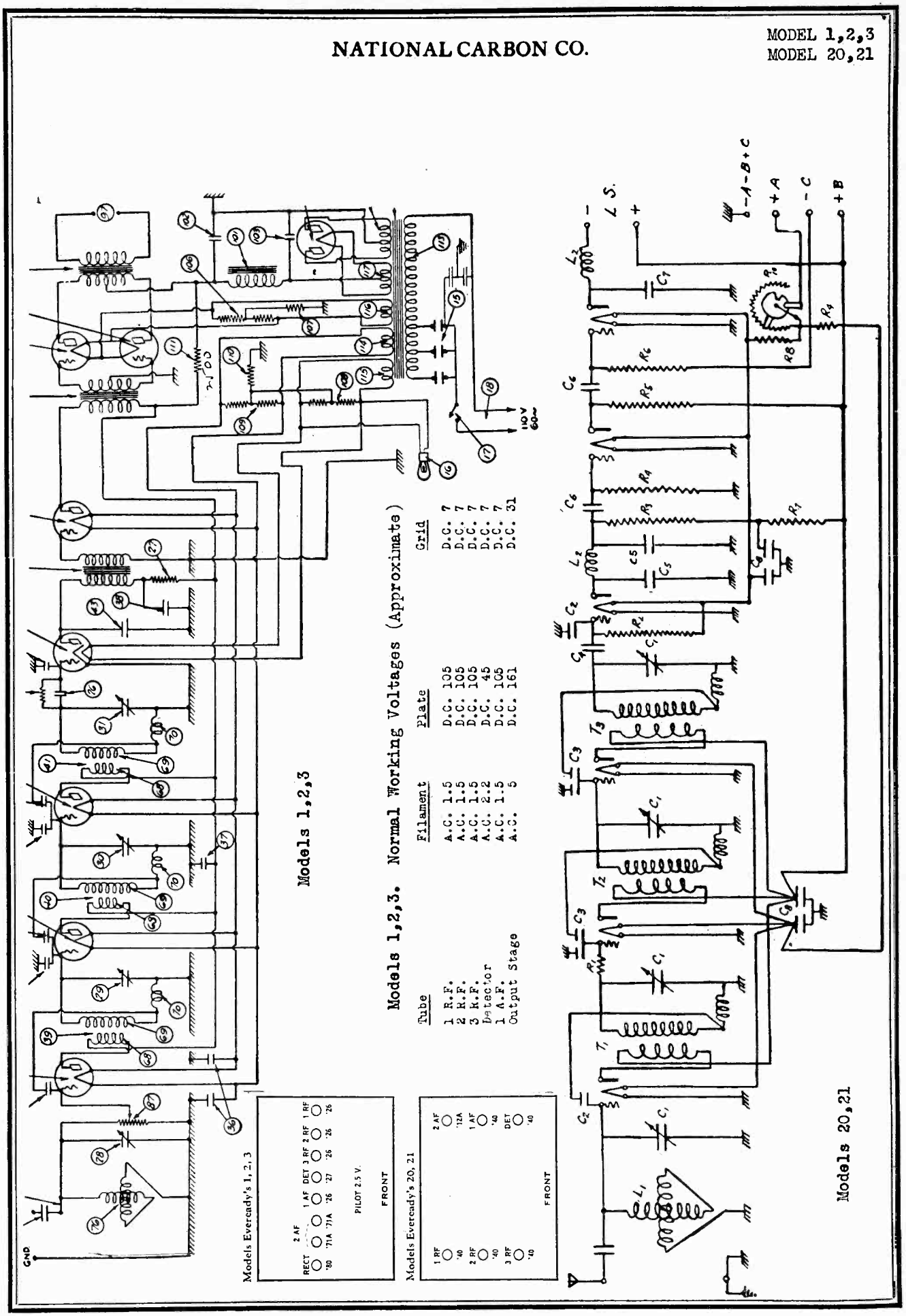

Models 1,2,3. Normal Working Voltages (Approximate)

Tube	Filament	Plate	Grid
1 R.F.	A.C. 1.5	D.C. 105	D.C. 7
2 R.F.	A.C. 1.5	D.C. 105	D.C. 7
3 R.F.	A.C. 1.5	D.C. 105	D.C. 7
Detector	A.C. 2.2	D.C. 45	D.C. 7
1 A.F.	A.C. 1.5	D.C. 105	D.C. 7
Output Stage	A.C. 5	D.C. 161	D.C. 31

www.americanradiohistory.com

MODEL 31,32,33,34
Eveready

NATIONAL CARBON CO.

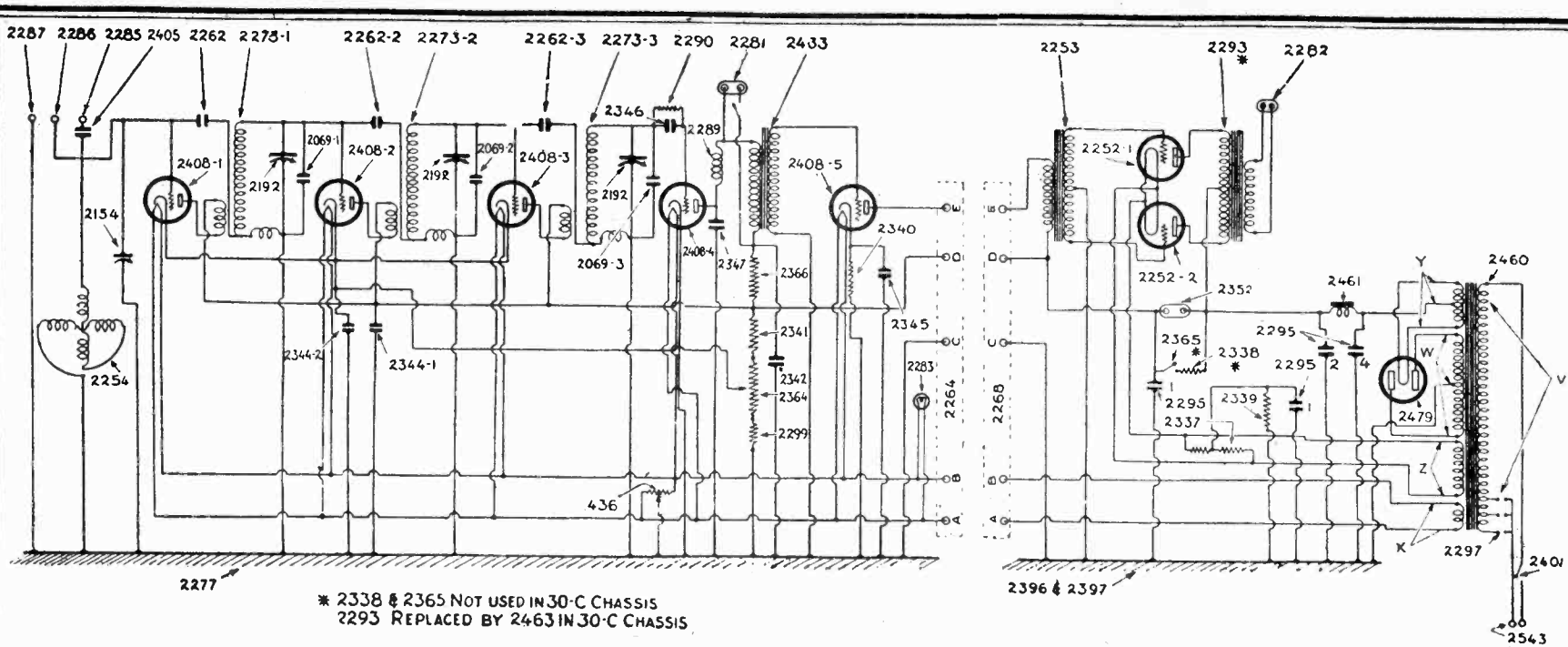

* Not used in 30-C chassis.

PART NO.	ELECTRICAL VALUE		PART NO.	ELECTRICAL VALUE	
2290	2	megohms	2344-1	.5	mfd
2366	17500	ohms	2344-2	.5	mfd
2299	175	ohms	2405	.0001	mfd
2340	1750	ohms	2346	.0001	mfd
2341	3500	ohms	2347	.00025	mfd
2436	10	ohms	2343	2	mfd
2364	600	ohms	2345	1	mfd
2339	1000	ohms			
2388	2500	ohms*			

NORMAL WORKING VOLTAGES (APPROXIMATE)

Tube	Filament	Plate	Grid
1 R.F.	A.C. 2.45	D.C. 100	D.C. 6
2 R.F.	A.C. 2.45	D.C. 100	D.C. 6
3 R.F.	A.C. 2.45	D.C. 100	D.C. 6
Detector	A.C. 2.45	D.C. 50	-
1 A.F.	A.C. 2.45	D.C. 100	D.C. 4.5
Output stage	A.C. 5.1	D.C. 175	D.C. 38
Rectifier Receiver	A.C. 5.1		

(Line Voltage 119. Set on 115 Volt Tap. Volume Control on Full.)

Models Eveready's 31, 32, 33, 34

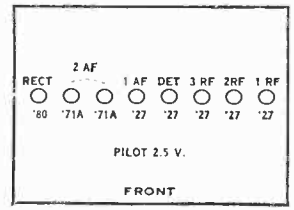

www.americanradiohistory.com

NATIONAL CARBON CO.

MODEL 42,43,44
Eveready

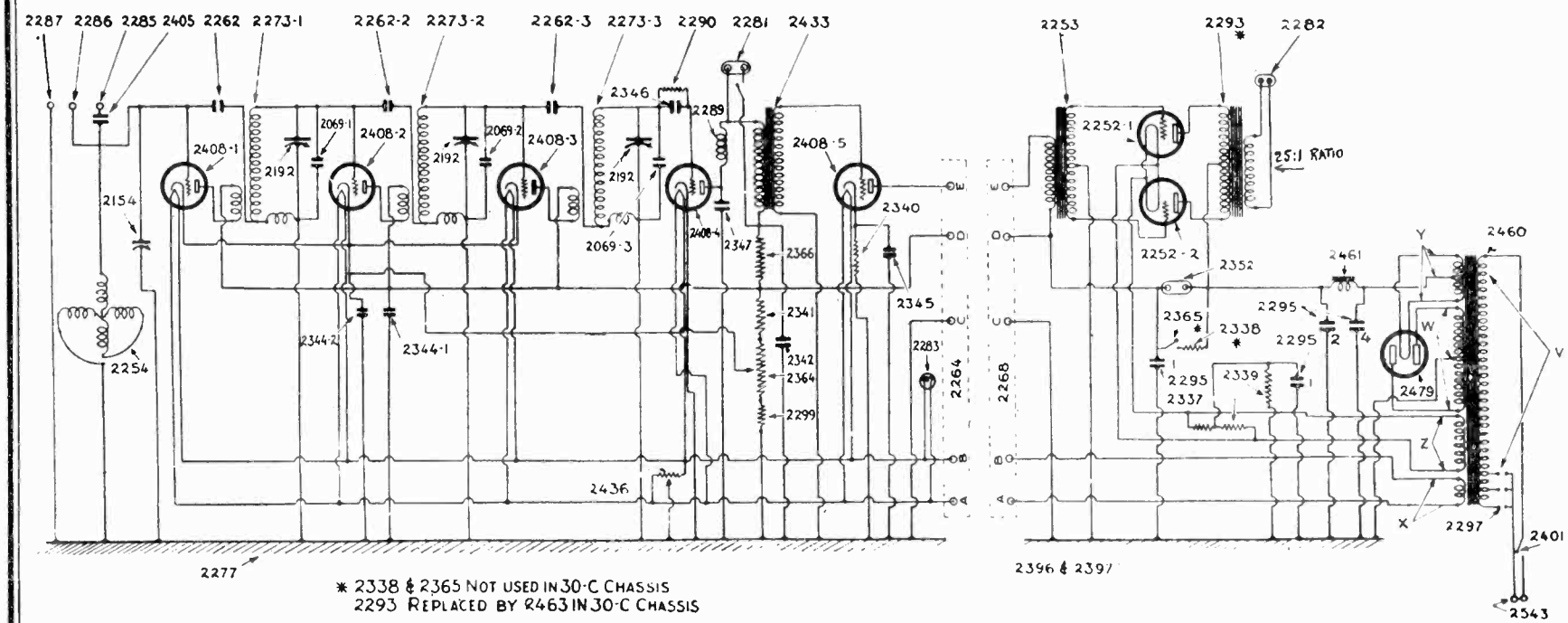

* 2338 & 2365 NOT USED IN 30-C CHASSIS
2293 REPLACED BY R463 IN 30-C CHASSIS

2344-1	.5	mfd	2290	2	megohms
2344-2	.5	mfd	2366	17500	ohms
2405	.0001	mfd	2299	175	ohms
2346	.0001	mfd	2340	1750	ohms
2347	.00025	mfd	2341	3500	ohms
2343	2	mfd	2436	10	ohms
2345	1	mfd	2364	600	ohms

2707 replaces 2339 900 ohms

Series .40 Receivers employ a 5000 ohm field coil.

NORMAL WORKING VOLTAGES (APPROXIMATE)

Tube	Filament	Plate	Grid
1 R. F.	A. C. 2.45	D. C. 100	D. C. 6
2 R. F.	A. C. 2.45	D. C. 100	D. C. 6
3 R. F.	A. C. 2.45	D. C. 100	D. C. 6
Detector	A. C. 2.45	D. C. 50	-
1 A. F.	A. C. 2.45	D. C. 100	D. C. 4.5
Output Stage	A. C. 2.5	D. C. 250	D. C. 50

Models Eveready's 42, 43, 44

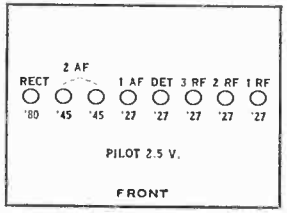

www.americanradiohistory.com

MODEL 52,53,54
Eveready

NATIONAL CARBON CO.

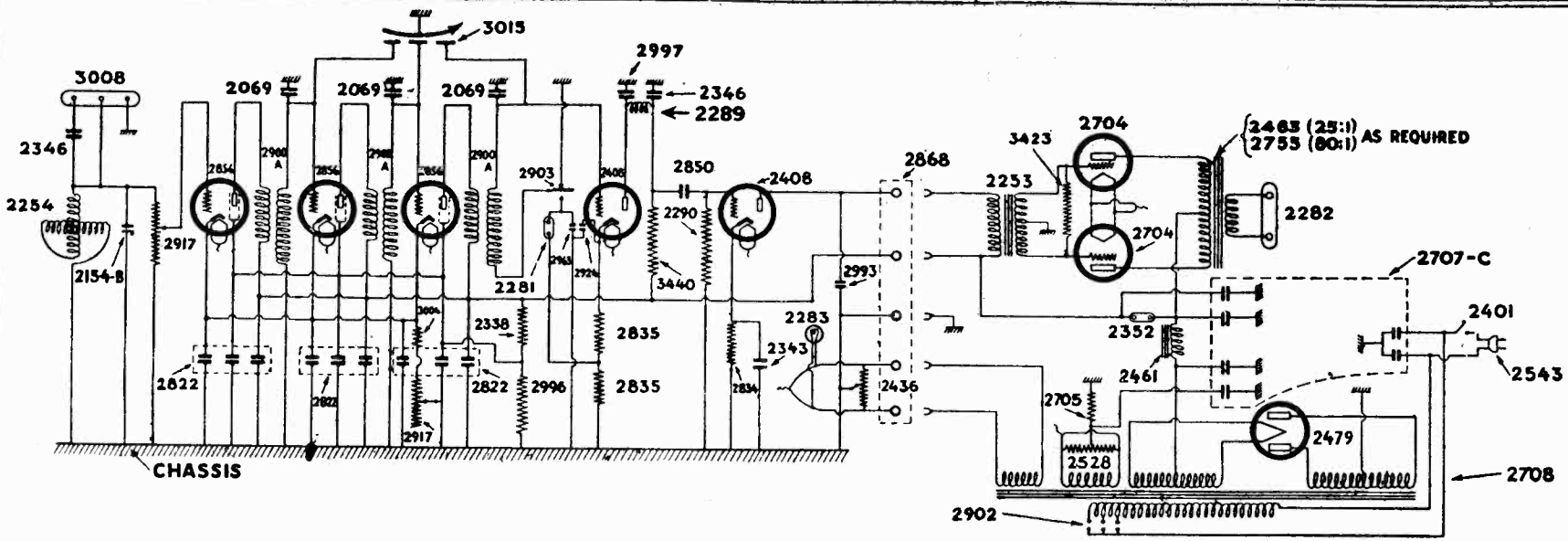

2290	2.	megohms			
2835	4000	ohms			
3440	125000	ohms			
3004	200	ohms	2346	.0001	mfd
2834	3000	ohms	2822	.5	mfd*
2338	2500	ohms	2924	1	mfd
2996	2250	ohms	2850	.01	mfd
2917 *			2343	2.	mfd
2528	50	ohms	2963	.002	mfd
2705	900	ohms	2993	.004	mfd
3423	100000	ohms	2997	.0005	mfd

* 3 in one can

* Two sections
R-f section is 500,000 ohms
Screen voltage section is
10,000 ohms

Models Eveready's 52, 53, 54

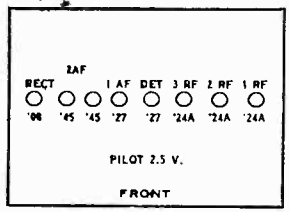

NORMAL WORKING VOLTAGES (APPROXIMATE)

Tube	Filament	Plate	Grid	Screen
1 R.F.	A.C. 2.3	D.C. 160	D.C. 2.2	D.C. 70
2 R.F.	A.C. 2.3	D.C. 160	D.C. 2.2	D.C. 70
3 R.F.	A.C. 2.3	D.C. 160	D.C. 2.2	D.C. 70
Detector	A.C. 2.3	D.C. 65	D.C. 5.8	
1 A.F.	A.C. 2.3	D.C. 150	D.C. 11.7	
Output Stage	A.C. 2.4	D.C. 240	D.C. 46	
Rectifier	A.C. 4.8			

(Line Voltage 117. Set on 115 Volt Tap. Volume Control Position on Full.)

www.americanradiohistory.com

THE NATIONAL COMPANY

MODEL S-G 5
MODEL S-G
Short Wave Tuner
MODEL S-G Short Wave
Tuner with '71
MODEL Auto Box Conn.

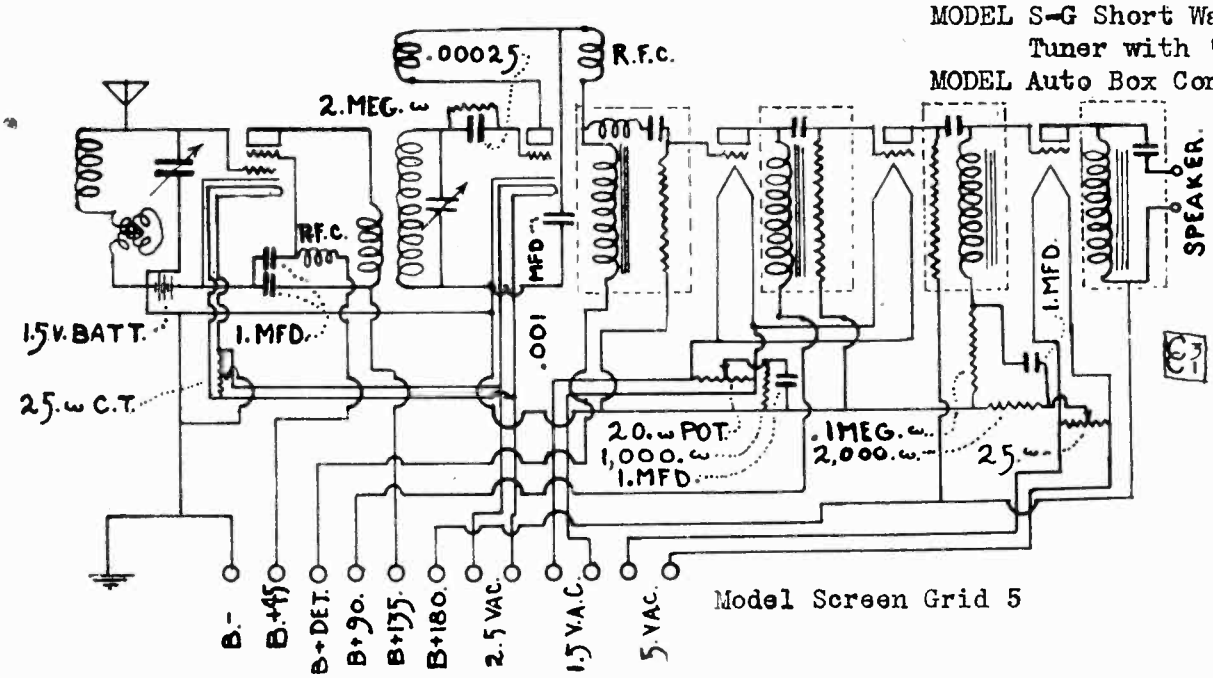

Model Screen Grid 5

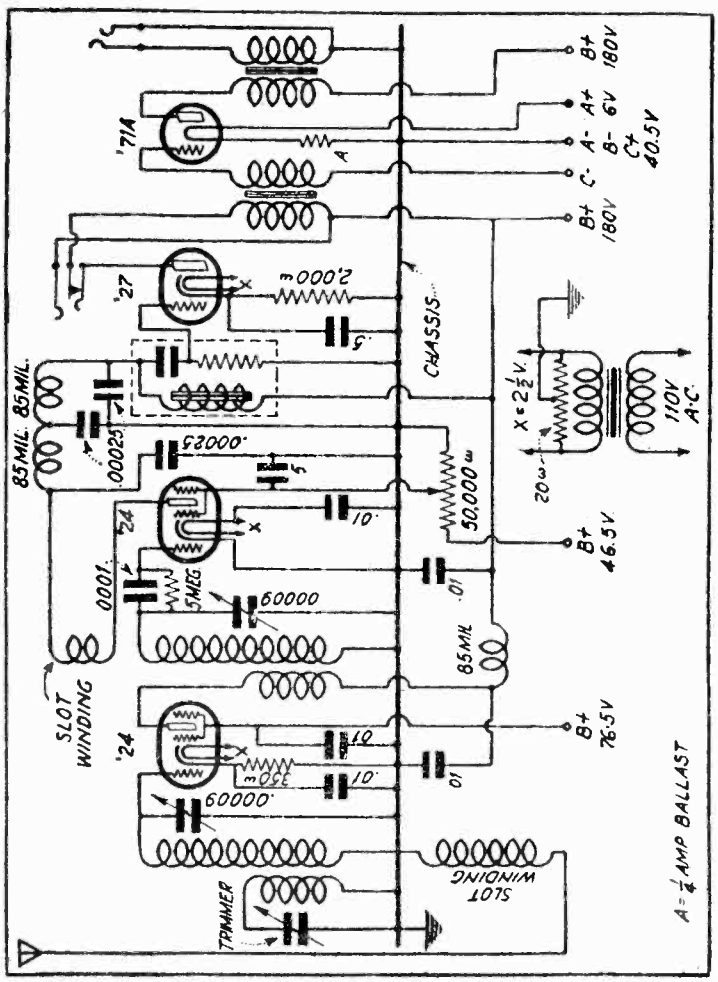

Model Screen Grid Short Wave (71)

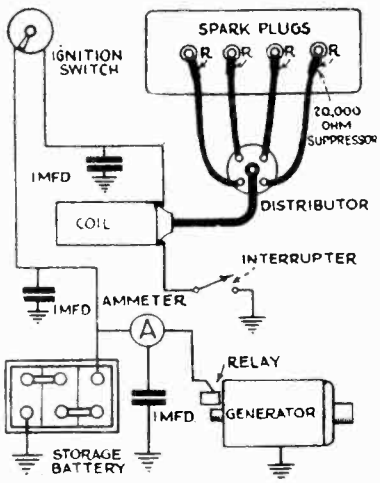

Model Auto Box Connections

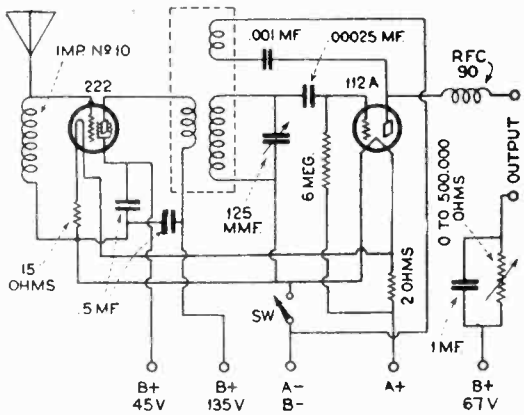

Model Screen Grid S.W. Tuner

www.americanradiohistory.com

MODEL MB-30
Schematic, Chassis
MODEL MB-29
MODELS Thrill Box AC, Short Wave
MODEL Auto Box

THE NATIONAL COMPANY

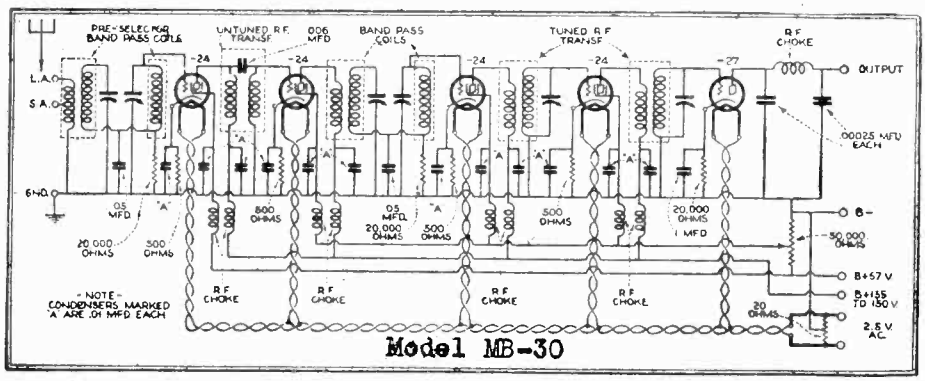

Model MB-30

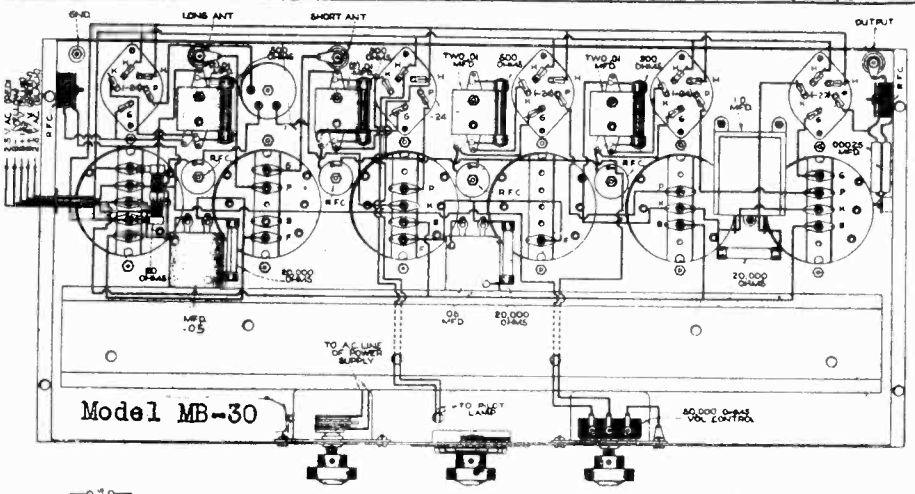

Model MB-30

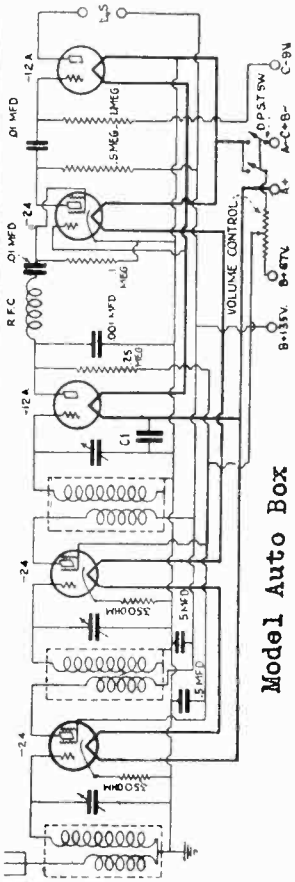

Model Auto Box
See preceding page for battery connections.

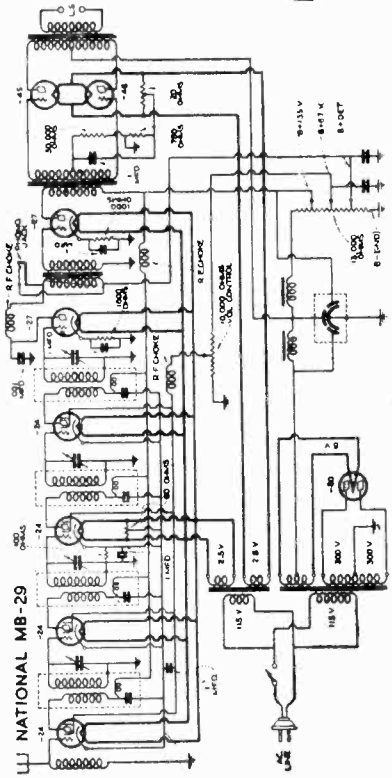

NATIONAL MB-29

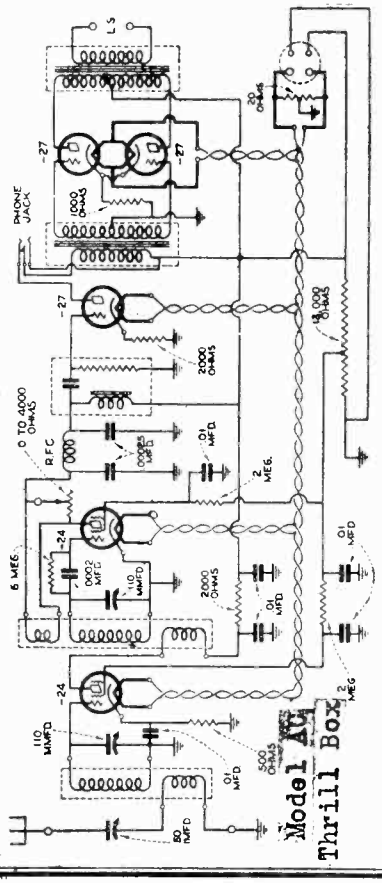

Model AC Thrill Box

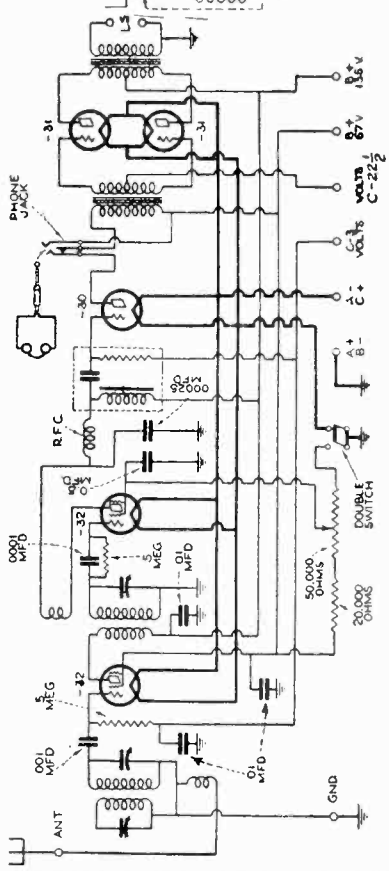

Model Short-Wave Thrill Box 2-volt Tubes

www.americanradiohistory.com

MODEL Super DX-5
MODEL Super DX-5A

NORDEN-HAUCK, INC.

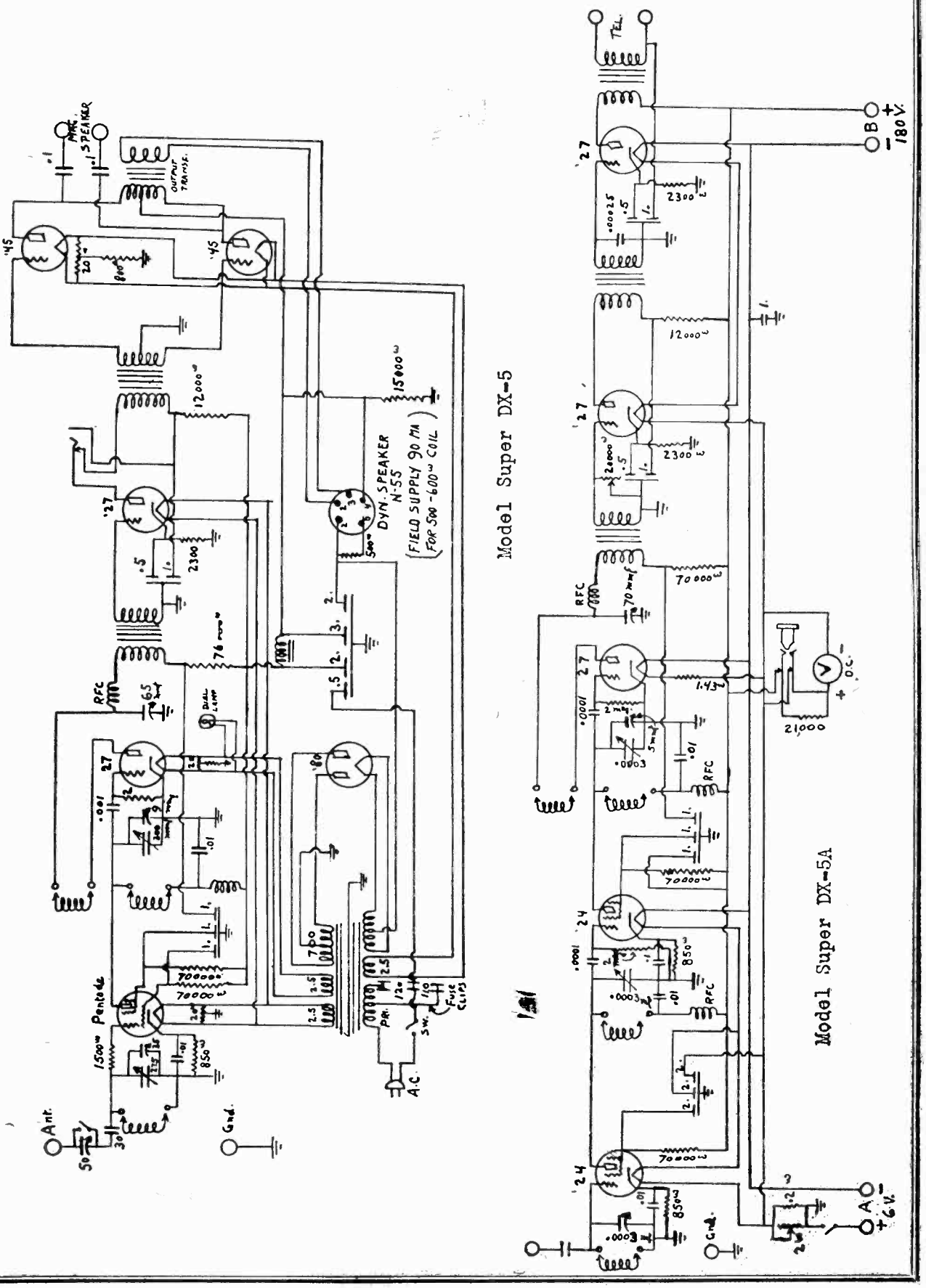

www.americanradiohistory.com

MODEL Admiralty Super 12

NORDEN-HAUCK, INC.

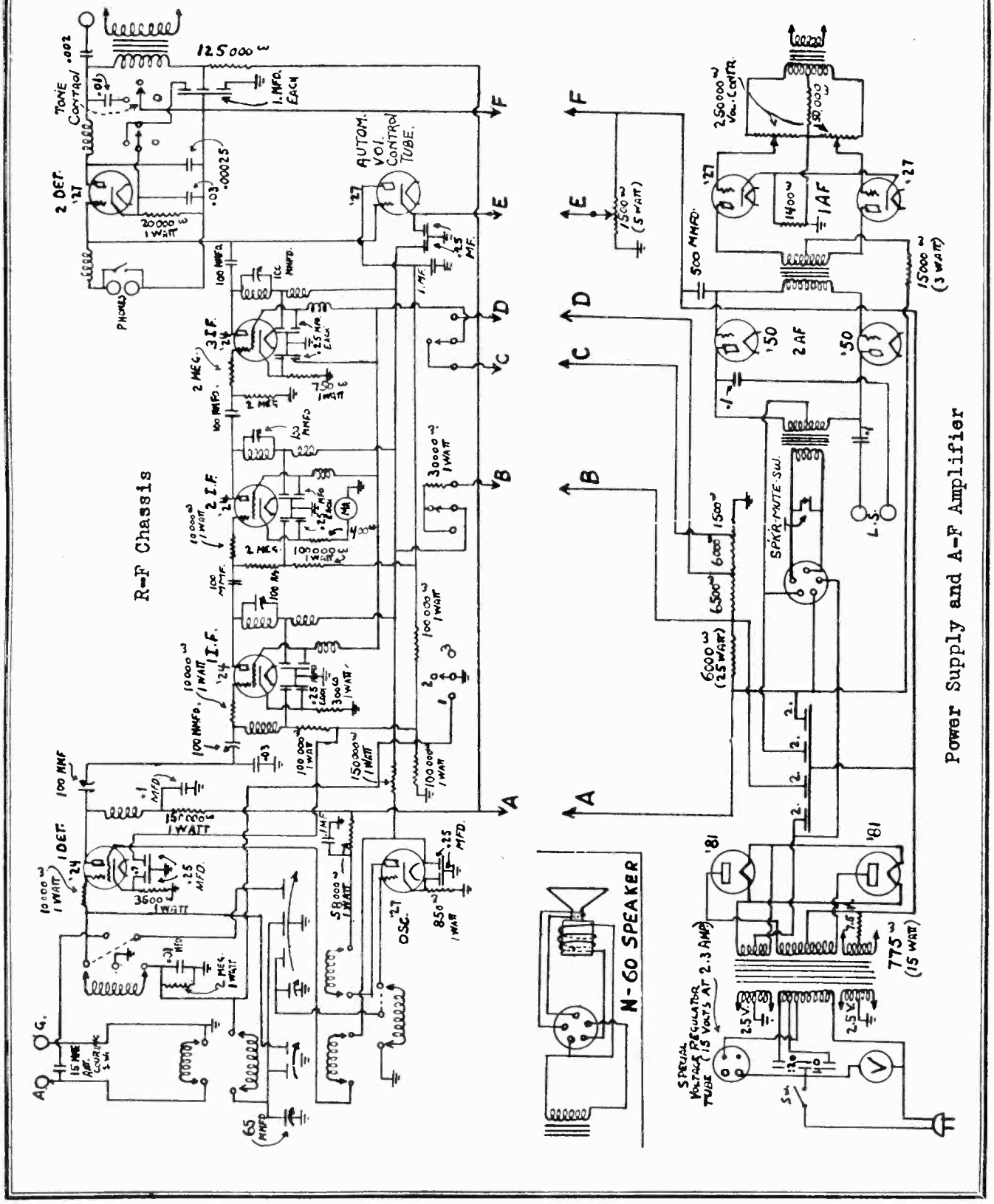

www.americanradiohistory.com

NORDEN-HAUCK, INC.

MODEL C-7
MODEL Super 10

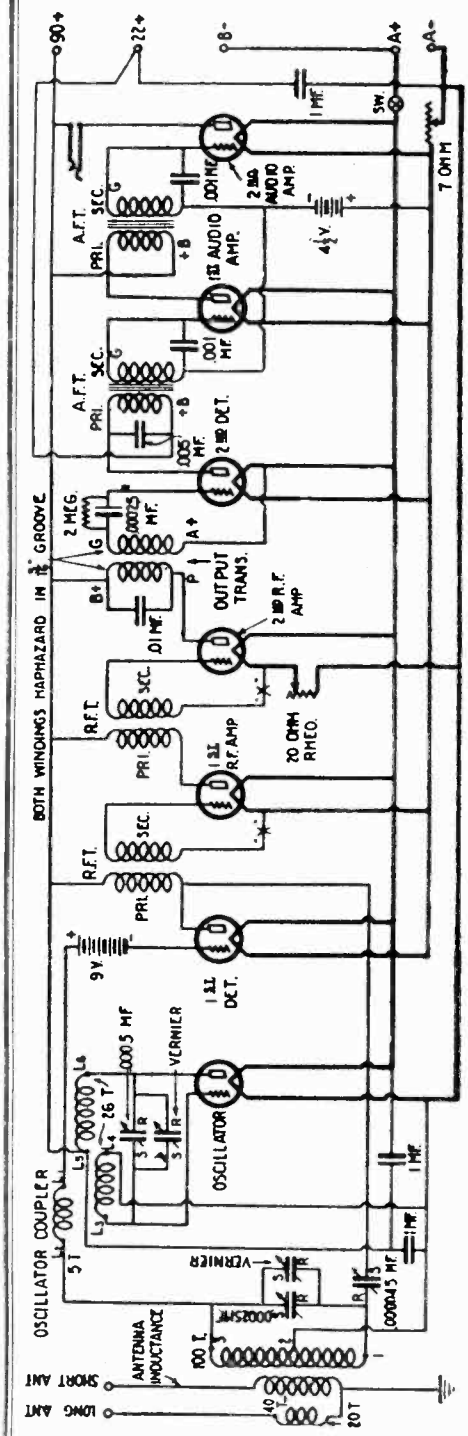

Model C-7 Norden Hauck super-heterodyne receiver.

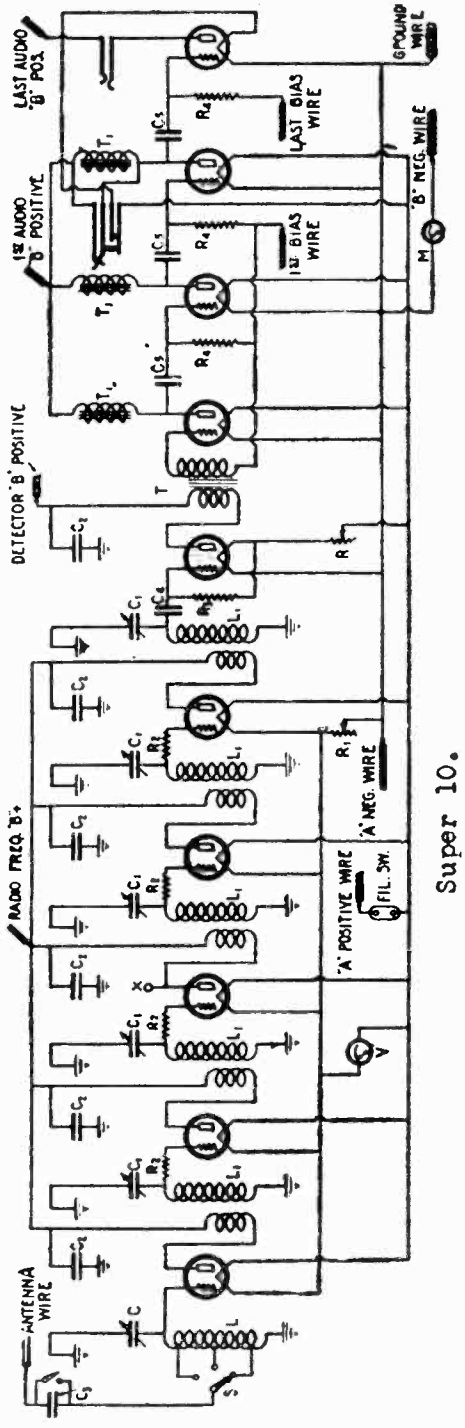

Super 10.

R is 20 ohms. R1 is 7 ohms. R2 is 750 ohms. R3 is 2 megohms.
R4 is 30000 ohms. C3 is .00025 mfd. C4 is .00025 mfd. C2 is
.5 mfd. C5 is .1 mfd.

www.americanradiohistory.com

www.americanradiohistory.com

MODEL 91 - Battery
Schematic, Chassis

OZARKA, INC.

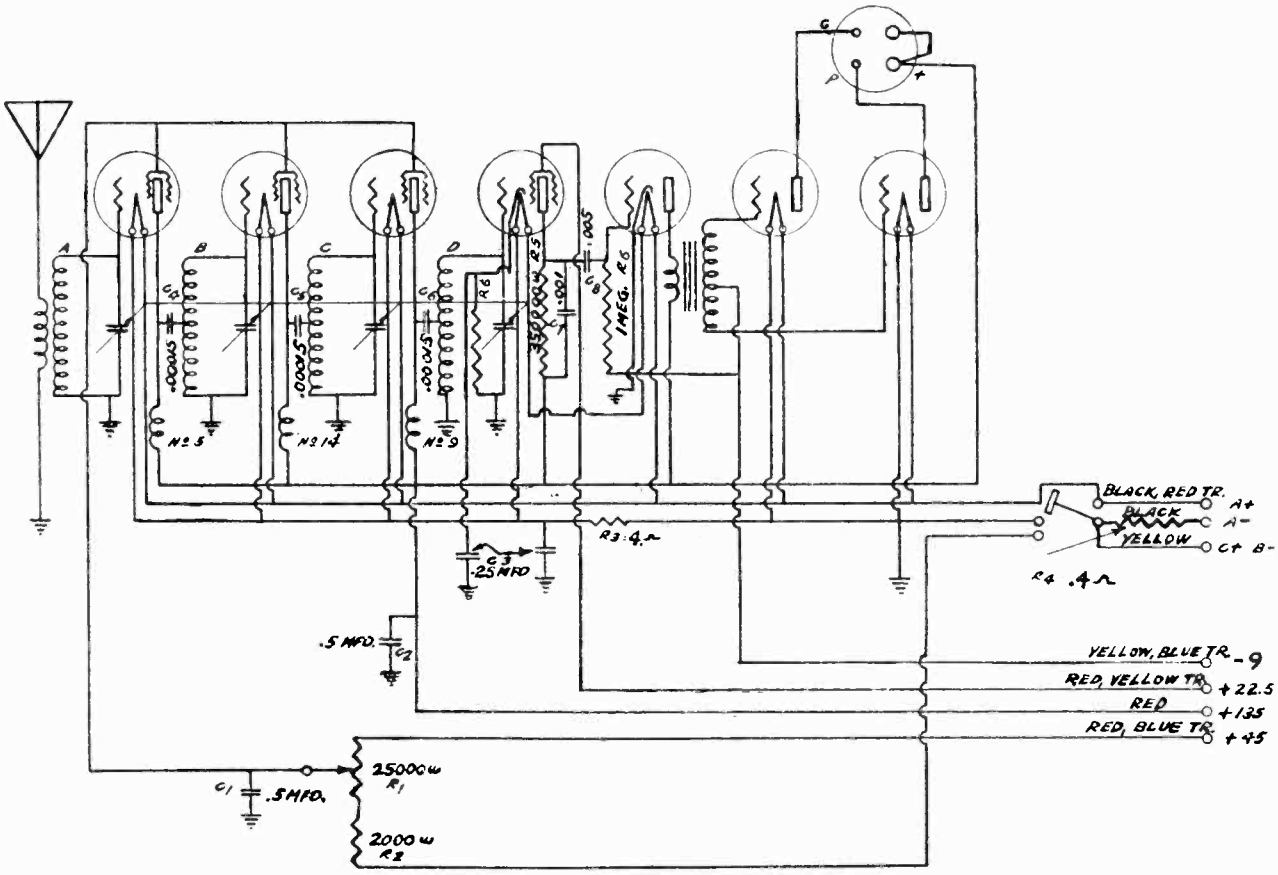

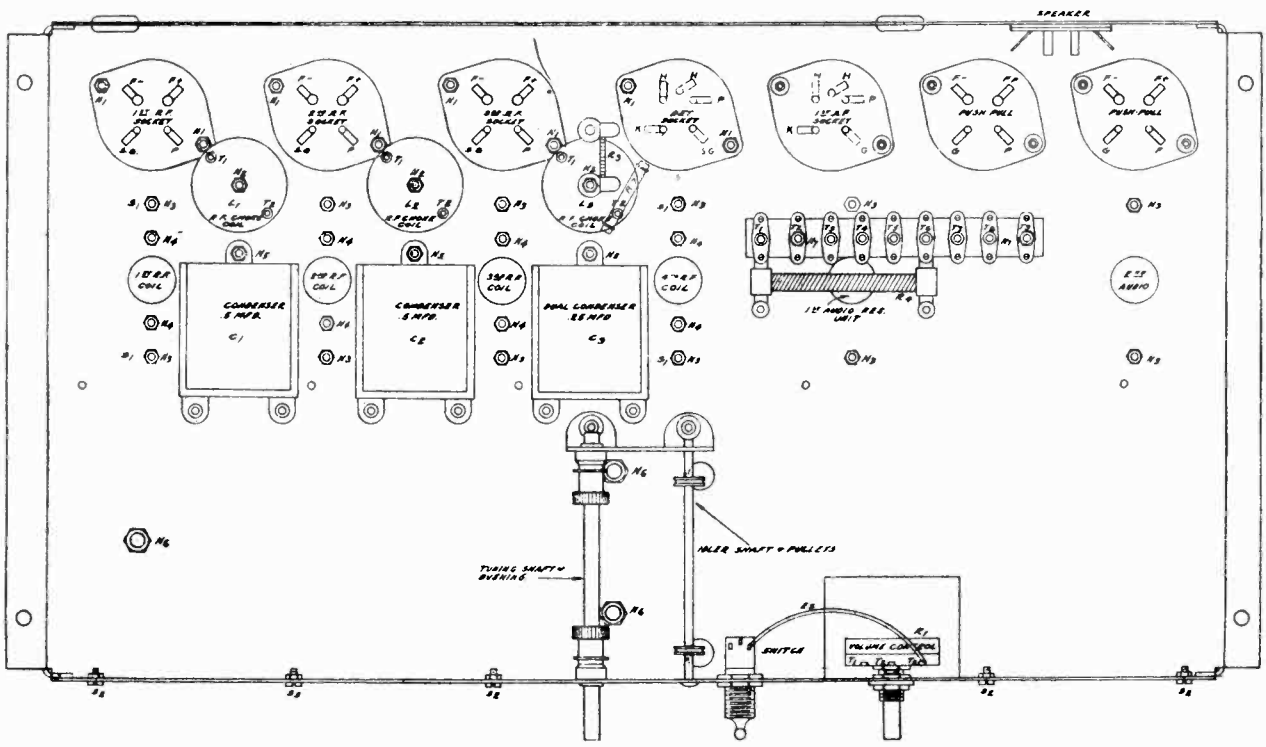

www.americanradiohistory.com

MODEL 90
Schematic, Chassis
Voltage

OZARKA, INC.

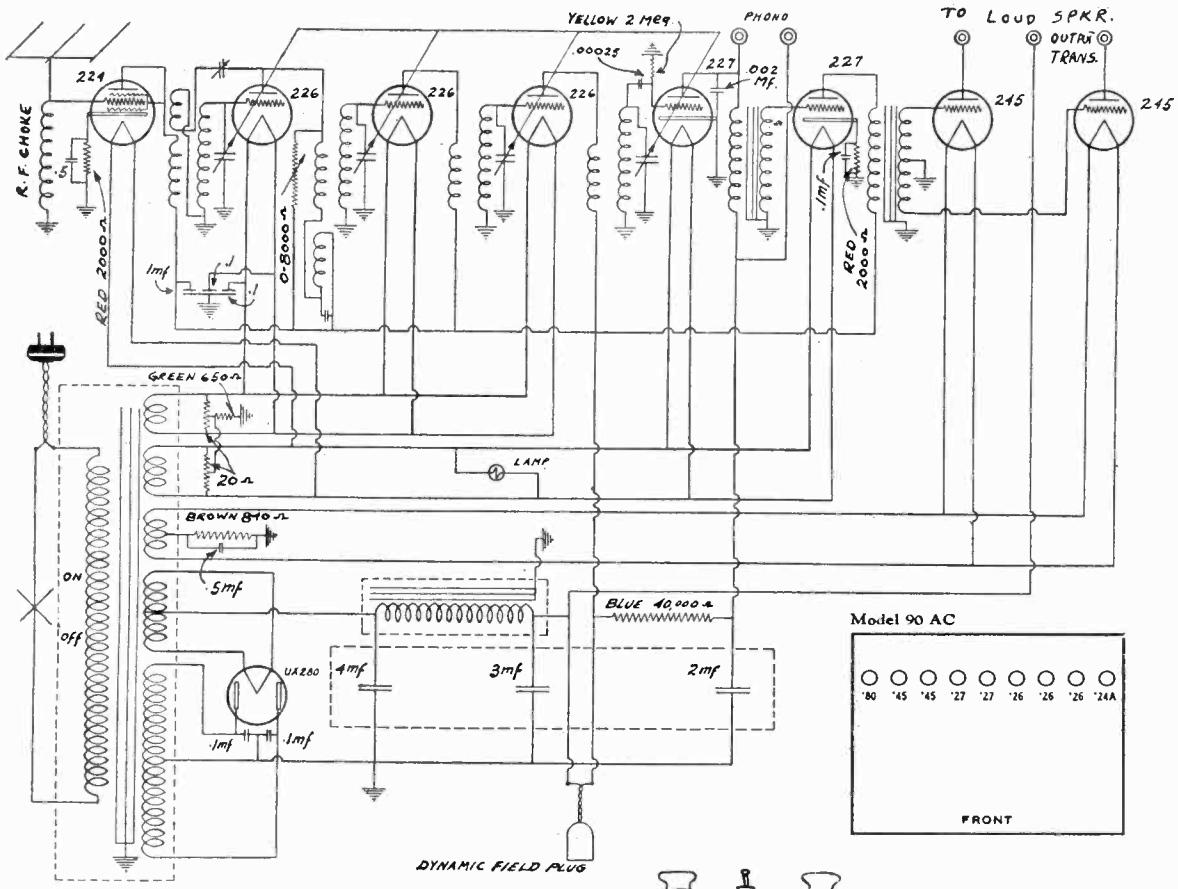

Model 90 AC

MODEL 90

Tube	Type	Plate	Grid
R.F.	'24	160	160
R.F.	'26	160	
R.F.	'26	160	
R.F.	'26	160	
Det.	'27	40	
A.F.	'27	150	
Pwr.	'45	300	
Pwr.	'45	300	

Volume Max.
All Volts to Ground.
Grid Volts Fil.To Grd.

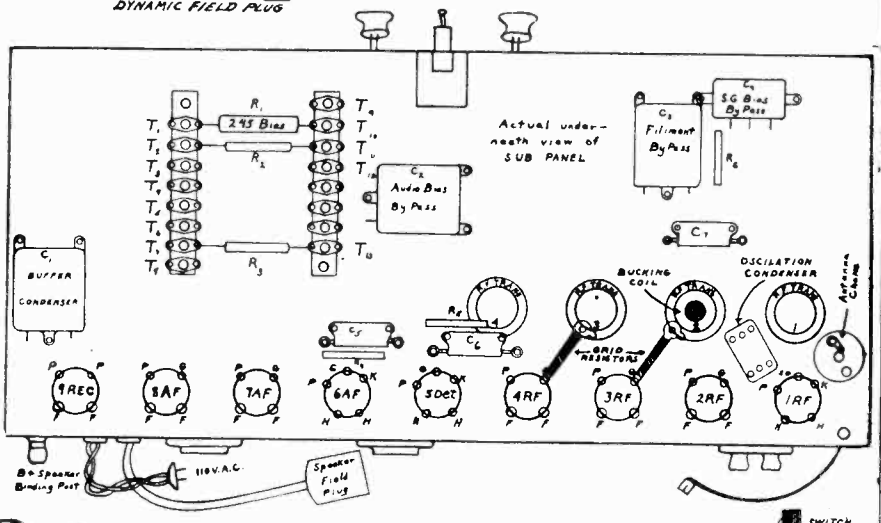

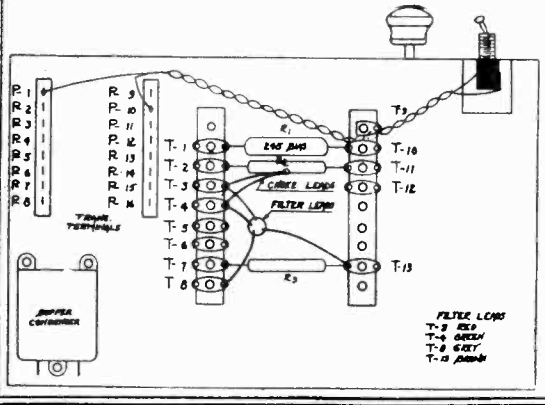

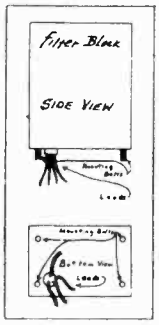

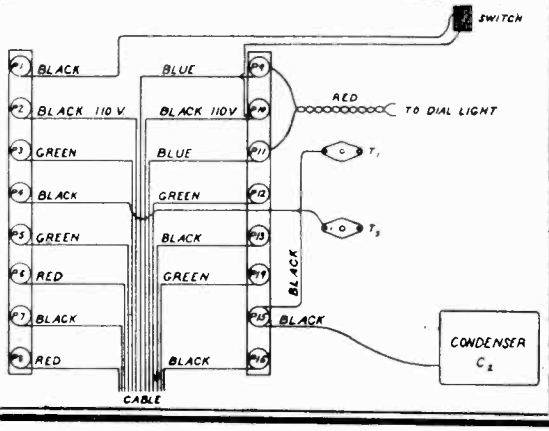

www.americanradiohistory.com