THE INTERNATIONAL JOURNAL FOR RECREATIONAL ELECTRONICS
November 1990
$3.00 US
CANADA $4.00

Elektor Electronics USA

Digital Capacitance Meter
Active Mini-Subwoofer
200 Watt Audio Amp
A Hot Smoke Detector
Programmer For 8751
Video Dubbing Mixer

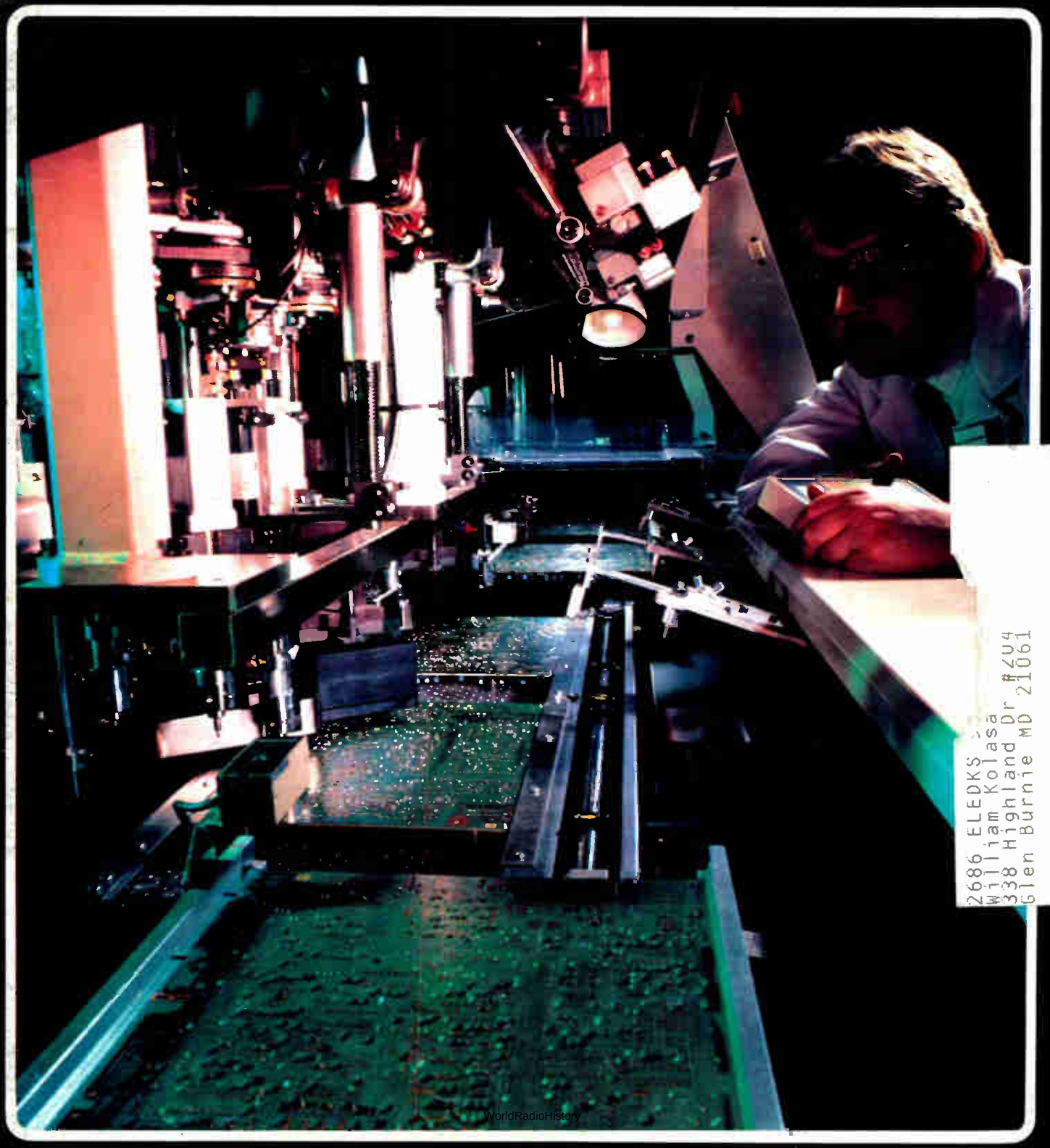

2686 ELEDKS
William Kolasa
338 Highland Dr #204
Glen Burnie MD 21061

WorldRadioHistory

morel

high fidelity range

The MDM 85 is a mid range 75mm soft dome unit of extremely high standard, both from a design and technical viewpoint.

It incorporates the renowned Morel double magnet and Hexatech voice coil techniques, and results in a unit of above average sensitivity with extremely low distortion and high power handling capability.

With an output level of 96dB distortion in the area of 400-800Hz is slightly over 1% falling to 0.015% from 1Khz.

There are two different types available, one with a rear enclosure and one without (MDM 85NE). The type with the rear enclosure can be fitted into a cabinet as an integral unit.

The MDM 85NE without the rear enclosure can only be fitted into a system having a separate housing to enclose the unit. A volume of 0.7 litre is recommended for this housing, which is essential to prevent inter-reaction with the bass unit compressions and expansions. This housing must be filled full with damping material, such as fibreglass or rock wool.

The Thiele small parameters are given for both types under specifications. The contribution of this unit to a suitably designed system will be evident in the clarity and detail given in the 500-5000Hz region.

Specification

MDM 85 (with enclosure)	
Overall Dimensions	∅ - 160mm x 113mm
Nominal Power Handling Din	300W
Transient Power 10ms	1500W
Voice Coil Diameter	75mm (3")
Voice Coil Former	Hexatech Aluminium
Frequency Response	300-5000 Hz
Resonant Frequency	250 Hz
Sensitivity	92 dB (1W/1M)
Nominal Impedance	8 ohms
Harmonic Distortion for 96 dB SPL	<1%
Intermodulation Distortion for 96 dB SPL	<0.25%
Voice Coil Inductance @ 1 Khz	0.2mh
Air Gap Width	1.05mm
Air Gap Height	3.0mm
Voice Coil Height	6.0mm
Flux Density	1.0T
Force Factor (BXL)	4.6 WB/M
Rdc	5.2 ohms
Rmec	37.90
Qms	0.29
Qes	2.66
Q/T	0.20
Vas	0.33 litre
Moving Mass including Air Load	7.0 grams
Effective Dome Area	63.50 cm^2
Dome Material	Chemically Treated Fabric
Nett Weight	1.25 kg

Variations to specification for MDM 85NE (without enclosure)	
Overall Dimensions	∅ - 160mm x 60mm
Frequency Response	250-5000 Hz
Resonant Frequency	170 Hz
Rmec	39.33
Qms	0.19
Qes	1.81
Q/T	0.17
Vas	0.7 litre
Nett Weight	1.05 kg

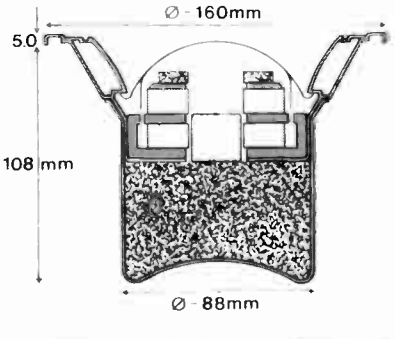

Specifications given are as after 24 hours of running.

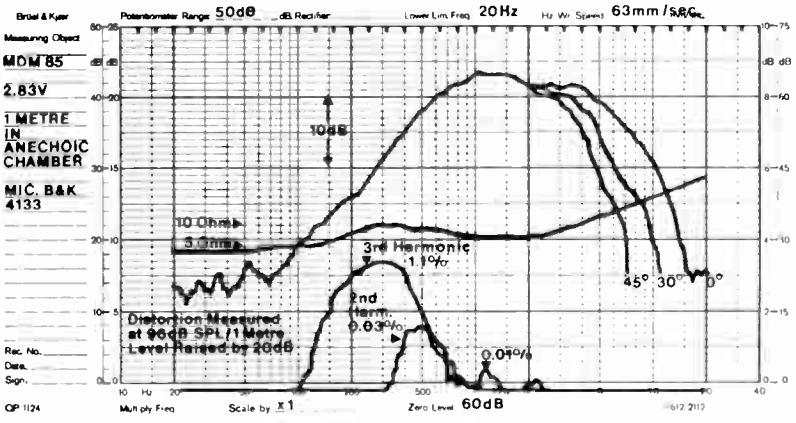

morel (U.K.) ltd.
11 Foxtail Road.
Nacton Rd. (Ransomes)
Industrial Estate,
Ipswich, IP3 9RT
England
Tel: (0473) 719212
Telex:987601 Morel G.

morel acoustics USA
414 Harvard Street
Brookline, MA 02146
Tel: (617) 277-6663
FAX: (617) 277-2415

morel®

WorldRadioHistory

Morel operate a policy of continuous product design improvement, consequently, specifications are subject to alteration without prior notice

Elektor Electronics USA

CONTENTS

November 1990
Volume 1
Number 2

In our next issue:

- 36-PAGE SUPPLEMENT OF CONSTRUCTION PROJECTS
- Chopper opamps
- Metal transmission lines
- Line pulse fundamentals
- Advanced input stage
- Milliohm meter
- Measuring techniques (2)
- PC video text decoder

Front cover

Five years ago, the Welsh company Race Electronics faced disaster. Around the world, the market for home computers had collapsed and 90 per cent of the company's turnover was tied to their production.

Today, Race has grown from a company with an annual turnover of £3 million to one with £100 million and claims to be Europe's leading contract manufacturer of electronic assemblies. It is a major success story in an area of South Wales that has faced large-scale restructuring of its traditional coal mining and steel making industries.

Printed-circuit board assemblies are now used in domestic, industrial and office equipment.

In the photograph, a technician is seen programming complex computer-controlled equipment used to assemble components on to PCBs. This equipment is capable of picking up and placing components at rates of up to 25 000 an hour, selecting from up to 100 different types of component at any one time.

Race Electronics, Race House, Lanelay Road Industrial Estate, Talbot Green, Pontyclun, Mid Glamorgan CF7 8YY

Copyright © 1990 Elektuur BV

ELEKTOR ELECTRONICS USA is published 11 times a year at $28 per year; $50 for two years by Audio Amateur Publications, Inc., 305 Union St. Peterborough NH 03458 USA. Application to mail at second class rates pending at Peterborough NH and an additional mailing office.

POSTMASTER: Send address changes to Elektor Electronics USA, Caller Box 876, Peterborough NH 03458-0876. Return Postage Guaranteed.

EDITORIAL

11 Father of the Microchip

APPLICATION NOTES

54 Stereo Bridge Amplifier with TDA7370
an SGS-Thomson application

AUDIO & HI-FI

26 **PROJECT**: Dubbing Mixer EV7000 Pt. 2
by ELV Design
44 **PROJECT**: Medium Power AF Amplifier Pt. 2
by T. Giffard
48 **PROJECT**: Active Mini-Subwoofer Pt. 1
by T. Giffard

COMPUTERS AND MICROPROCESSORS

40 **PROJECT**: Programmer for 8751
by O. Bailleux

DESIGN IDEAS

53 1-of-*N* Decoder
by G. Sankaran

GENERAL INTEREST

14 Smoke Detector
from an idea by R. Lucassen
36 **PROJECT**: PT-100 Thermometer
by J. Ruffell
57 In Quest of Pangram Pt. 2
by Lee C.F. Sallows

POWER SUPPLIES

20 **PROJECT**: 400W Laboratory Power Supply Pt. 2
by G. Boddington

RADIO & TELEVISION

30 **PROJECT**: S-VHS/CVBS-to-RGB Converter Pt. 2
by H. Reelsen
52 **PROJECT**: Solar-Powered MW Radio
by M.S. Dhingra

TEST & MEASUREMENT

16 **PROJECT**: Digital Capacitance Meter
by E. Barrow

MISCELLANEOUS INFORMATION

New Products 12; Classified Ads 62; Advertisers' Index 66; Readers' Services 63; Terms of Business 64.

Digital capacitance meter – p. 16

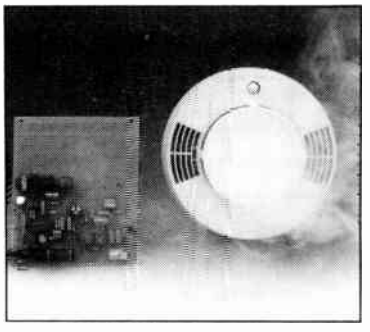

Smoke detector – p.14

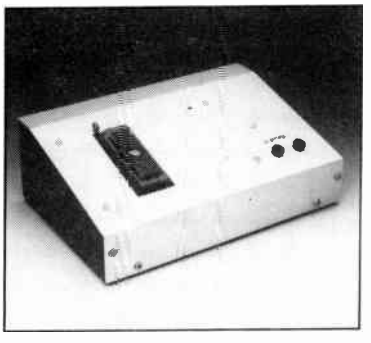

Programmer for the 8751 – p. 40

WorldRadioHistory

ORDER IN CA 1-800-521-MARK
ORDER OUTSIDE CA 1-800-423-3483

Since 1985

FREE CATALOG & INFORMATION (213) 888-8988
FAX (213) 888-6868

MARK V ELECTRONICS, INC.

Gives you more selection on Electronic Kits, Power Amplifiers, Test Instruments and Professional Products.

▲ indicates the level of difficulty in the assembling of our Products. ▲ Beginner ▲▲ Intermediate ▲▲▲ Advanced ★ Fully Assembled

PROFESSIONAL COLOR LIGHT CONTROLLER

SM-328 ★

The SM-328 professional color light controller is keyboard programmable for ease of use. It allows full control of intensity and flash rate. It has four separate channels with capacity of 1170 watts per channel. Total wattage capability is 4.68 killowatts. This is equivalent to 46 pcs. 100watt high bulbs or 936 pcs. 5-watt colored bulbs and is sufficient for the largest halls and auditorums

- *Independent input signal control*
- *Professional styled control panel*
- *4 independent outputs*
- *4 independent dimmer controls*
- *Chaser speed controls*
- *Automatic chaser operation*
- *4 preset chaser programs*
- *Clockwise chaser control*
- *Anti-clockwise chaser control*
- *Match with any step down transformer from 12 to 24V AC*

Assembled & Tested: ~~$150.00~~
Now: $139.00

SPECIFICATIONS

Input sensitivity (music mode) 100mV (music • program) 2V • Output power 1170 W per channel MAX 4680 W total • Power requirements 105 120 V 60 Hz • Dimensions 14 32" wide 9 high 3 19 deep

VIDEO/AUDIO SURROUND SOUND PROCESSOR

SM-333 ▲▲▲★

It has inputs for VCR, Video Disc and Compact Disc and can also be used with FM tuners, tape decks and LP discs - in fact anything that can be connected to your pre-amplifier.
It also has front panel control of dynamic noise reduction ONR*, surround level, effect and time delay up to 50 milliseconds.
Rear panel outputs for front and rear stereo speaker amplifiers. The unit may be purchased as a kit or fully assembled ready to plug in.

SPECIFICATIONS

Frequency response 20 Hz to 20KHz • Total harmonic distortion, Front channel 0 05% Rear channel Less than 0 25% • Input signal voltage 0 1 to 3 5V • Output Front channel 0 1 to 3 5V • Rear channel 6 6V • Delay time 5 to 50 milliseconds • Input impedance 47 K • Power requirments 100-120 VAC, 60 Hz • Dimensions 14 2" wide 4 82" deep 2 1 high
• TM OF NATIONAL SEMICONDUCTOR CORP

Complete Kit: $62.00
Assembled & Tested: ~~$85.00~~
Now: $70.00

1 GHz MULTI-FUNCTION COUNTER

FC 1000A ★

The FC-1000A is a multi-function 5 hertz to 1 GHz dual-range frequency counter It can measure frequency, period and total events Readout is a large 0 5" 8-digit 7-segment LED display
It utilizes two crystal oscillators which can be individually calibrated for maximum long term accuracy against a frequency standard such as WWV transmissions
Additional features include a valuable self-check mode and a two step input attenuator

SPECIFICATIONS

Frequcny range 5 Hz to 10 MHz 10 MHz to 100 MHz 100 MHz to 1000 MHz Resolution (MAX) 10 Hz to 0 1 Hz depending on measure range Accuracy ± 1 digit, ± time base error Period measurement 0 25 uS to 10S Period measurement resolution 10 to 10^{-8} seconds depending on gate time Totalization measurement 1 Hz to 10 MHz Totalization display 99999999 Sensitivity 15 mV 10 Hz to 70 MHz 30 mV 70 MHz to 100 MHz 15 mV 100 MHz to 1000 MHz Input impedance 1 megohms 10 Hz to 100 MHz (INPUT A) 50 ohms 100MHz to 1000 MHz (INPUT B) Attenuation X1 X10 Time base 10 MHz and 3 90625 MHz (- 10ppm) Hold Data hold of last reading Self check Counts internal 10 MHz time base Power requirements 110 to 120 VAC 60 Hz Dimensions 3" high, 9 69" wide 7 87" deep

Assembled & Tested $179

300 W HI-FI POWER AMPLIFIER (MONO)

TA-3600 ▲▲▲

The TA-3600 is an extremely high power amplifier specifically designed to reproduce the high dynamic range available on compact discs.
It has low noise, high stability low distortion, extended frequency range and high efficeincy in a compact package Two of these units with appropriate power supply and pre-amplifier are required for stereo reproduction

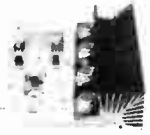

Complete Kit: $79.00
Assembled & tested: $103.00
Transformer: $42.00

SPECIFICATIONS

Power output 300 watts sine wave into 8 ohms, 540 watts music power into 8 ohms • Frequency response 10Hz to 20 KHz • Total harmonic distortion Less than 0 05% • Intermodulation distortion Less than 0 05% • Sensitivity 1 V rms at 47K • Power requirements 60 to 75 VDC at 8 amp • Dimensions 8" x 7 1/4" x 2 1/4"

80W + 80W PURE DC STEREO MAIN POWER AMPLIFIER

TA-802 ▲▲

Modern circuit design utilizes full complementary power output and differential cascode input stage. DC coupling provides superb transient response. A special output circuit guards against short circuits and overload operation.

SPECIFICATIONS

Power output 80 watts per channel into 8 ohms Total harmonic distortion Less than 0 05% at rated power Intermodulation distortion Less than 0 05% at rated power Frequency response DC to 200 KHz -0dB, -3dB @ 1 watt Power requirements 30 VAC x 2 @ 6 amp May use Mark V model 003 transformer P C Board 8-1/2" x 5" x 1 1/8" Heat sink 5-1/8" x 2 5/8" x 3" (Each)

Complete Kit $45.94
Assembled & Tested $59.72

100W DYNAMIC CLASS A MAIN POWER

TA-1000A ▲▲

This well designed and stable amplifier features DC coupling throughout and a fully complementary symmetry circuit topology. It operates in class A at low and medium levels and gradually shifts to class AB operation at high levels A pair of these amplifiers provide 200 watts of super high fidelity sound reproduction.

SPECIFICATIONS

Power output 100 watts into 8 ohms 125 watts into 4 ohms • Frequency response 10Hz to 100 KHz • Total Harmonic Distonon Less than 0 008% • Signal to noise ratio Better than 80 dB • Sensitivity 1V • Power requirements 35 to 45 VDC @ 3 amp • May use Mark V Moel 003 transformer • PCB Dimensions 5 38" x 3 38" x 1 2" • Heal sink 5 13" x 2 63" 3" (Each)

Complete Kit $59.69
Assembled & Tested $80.58

Rack Mount Metal Cabinets with aluminium panel are suitable for many projects and most of our kits.

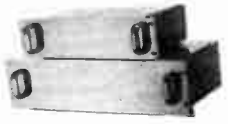

We provide transformers for most of our Mark V amplifier kits.

120W MOSFET POWER AMPLIFIER (MONO)

TA-477 ▲▲

This amplifier is designed specifically for low TIM distortion. It uses parallel MOSFET output transistors. This is a very popular kit because of its superior sound reproducing ability and high power reserve BUILD TWO KITS FOR A PROFESSIONAL STEREO AMP!

SPECIFICATIONS

T H D Less Than 0 007% • Power output 120 watts into 8 ohms • Frequency response 8 Hz to 20KHz +0-0 4 dB • Sensitivity 1V • Power requirements 55 VDC @ 3 amps May use Mark V Model 003 Transformen

Complete Kit $68.00
Assembled & Tested $85.00

PLEASE SEND ME A COPY OF THE FREE CATALOG

NAME

ADDRESS

CITY

STATE ZIP

* Free gift for any purchase during Christmas Season

AMPLIFIERS		KIT	ASSEMB.
MODEL	DESCRIPTION		
TA-28MK2	Digital Voice Memo ▲▲	30 00	
TA-50A/B	Multi-Purpose Melody Generator ▲	12 84	17 20
TA 50C	Multi-Purpose Melody Generator ▲	13 65	18 71
TA 120MK2	35W Class A Main Power Mono Amp ▲▲	28 50	39 80
TA-300	30W Multi-Purpose Single Channel Amp ▲	20 00	29 00
TA 302	60W Stereo Power Booster (w/case)★		70 00
TA 323A	30W X 2 Stereo Pre-main Amp ▲	29 50	38 35
TA 377A	Hi Quality FET Stereo Pre-Amp ▲▲▲	59 95	75 00
TA 400	40W Solid State Mono Amp ▲	28 00	34 93
TA 477	120W Mosfet Power Mono Amp ▲▲	68 00	85 00
TA 800	80W - 80W DC Pre Main & Power Amp ▲▲	60 92	79 20
TA 802	80W - 80W DC Stereo Main Power Amp ▲▲	45 94	59 72
TA 820A	60W - 60W OCL DC Pre-Main Stereo Amp ▲▲	40 39	49 37
TA-1000A	100W Dynamic Class A Main Power Mono Amp ▲▲	59 69	80 58
TA-1500	100W X 2 Class A DC Stereo Pre Main Amp ▲▲▲	73 70	95 81
TA 2200	Fet Super Class A DC Pre Amp ▲▲▲	47 70	58 24
TA 2400A	Electronic Echo & Reverberation Amp ★		96 00
TA 2500	HQ Pre Amp w/ 10 band graphic equalizer ★		68 80
TA 2800	HI FET IC Pre Amp w/ 3 way tone control ▲▲	48 90	63 57
TA 3000	Stereo Simulator (For Mono TV or Any Mono Source) ▲▲	27 00	38 50
TA 3600	300W HQ Hi Fi Power Mono Amp ▲▲▲	79 00	103 00

POWER SUPPLIES		KIT	ASSEMB.
TR 100A	0 15V 2A Regulated DC Power Supply (w/Case)▲▲▲★		S 69 50
TR 355A	0 15V 5A Regulated DC Power Supply ▲	14 55	20 76
TR 355B	0-30V 3A Regulated DC Power Supply ▲	14 55	20 76
TR 503	0 50V 3A Regulated DC Power Supply ▲▲	15 75	22 65

INSTRUMENTS		KIT	ASSEMB.
SM 43	3 - Multi Functional Led D P M (w ABS plastic case)▲▲	S 34 50	S 43 00
SM 48	4 - Hi Precision D P M ▲▲▲	38 00	48 00
SM 48A	4 - Hi Precision D P M (w ABS plastic case)▲▲▲	41 20	52 00
SM 49	3 - Multi Functional LCD D M P (w Hold Function)▲▲	36 00	44 50
SM 100	150MC Digital Frequency Counter▲▲▲	79 00	90 00
FC 1000A	1 GHz Frequency Counter ★		179 00

MISCELLANEOUS		KIT	ASSEMB.
MODEL	DESCRIPTION		
TY-23B	3 Channel Color Light Controller ▲▲▲★	S 51 20	S 65 00
TY-25	Stereo Loudspeaker Protector ▲	13 85	19 85
TY-35	FM Wireless Microphone ▲	10 22	
TY-36	AC/DC Quartz Digital Clock ▲	19 00	26 20
TY-38	Sound / Touch Control Switch ▲	12 00	
TY-41MK V	Infared Remote Control Unit (w/Case) ▲▲▲	20 00	35 00
TY-42	Bar / Dot Level Meter ▲▲	24 15	33 81
TY-43	3 Digital Panel Meter ▲	29 00	38 00
TY-45	20 Steps Bar / Dot Audio Level Display ▲▲	38 45	46 14
TY-47	Superior Electronic Roulette ▲▲	19 46	27 24
SM-222	7 Band HI-FI Graphic Equalizer ▲▲▲	26 80	38 80
SM-328	4 Channel Professional Color Light Controller★		139 00
SM-333	Audio/Video Surround Sound Processor ▲▲▲★	62 00	70 00
SM-666	Dynamic Noise Reduction ▲	26 00	34 00
10 000u/f	80 V Capacitor (Suggested for TA-3600 TA-477 TA-100A & TA-802)		22 00

METAL CABINETS WITH ALUMINUM PANEL					
MODEL	H	W	D	MATCHING	PRICE
LG-1273	3"	12"	7"	TA-2800 TA-377A TA-2200	S22 16
LG-1684	4"	16"	8"	TA-323A, TA-377A, TA-2200	26 64
LG-1924	4"	19"	11½"	TA-802 TA-820A, TA-1500 TA120MK 2 TA-800 TA-1000A	32 00
LG-1925	5"	19"	11½"	TA 477 TA-800, TA-1500 TA-1000A TA 3600	35 00
LG-1983	2¾"	19"	8"	TA-377A TA-2800 TA-2200 TA-120MK 2	28 50

POWER TRANSFORMERS			
MODEL	DESCRIPTION	MATCHING	PRICE
001	28V x 2 6A to 30V x 2 6A	TA-800 TA-802 TA-820A TA-1000A TA-1500	S26 00
002	36V x 2 3A	TR-503 TA-323A TA 400 TA-300	21 00
003	40V x 2 6A	TA-477	27 00
004	24V x 2 6A	TA-120 MK 2	21 00
005	26V x 2 3A	TR-355B	15 00
006	18V x 2 5A	TR-355A	14 50
007	53V x 2 8A	TA-3600	42 00

We accept major Credit Cards Money Orders Check and C O D Orders C O D fee is $5 00 Minimum order is $20 00 • We ship by UPS ground inside US (min $3 00) and ship by US mail outside US Please call our sales department for orders over 2 lbs or foreign orders • All assembled units have a 30 days warranty • Quality or Volume discount available upon request • Residents of CA please add sales tax 6 75% • All merchandise are subject to prior sale Prices are subject to change without prior notice We are not responsible for typograph cal errors

Business & Showroom hours: (Pacific Time)
Mon thru Fri. 9:30 am to 5:00 pm
Sat.. 10:00 am to 5:00 pm

MARK V ELECTRONICS, INC. – 8019 E. Slauson Ave, Montebello, CA 90640

WorldRadioHistory

BOOKS from Old Colony Sound Lab

BUILDER'S GUIDES, general

BKAA-4	KILLER CAR STEREO ON A BUDGET	$19.95
MH-2	HOW TO MAKE PRINTED CIRCUIT BOARDS	$8.90
S-25	ELECTRONIC PROTOTYPE CONSTRUCTION	$17.95
S-27	DESIGN OF OP AMP CIRCUITS	$12.95
S-32	HOW TO READ SCHEMATICS	$14.95
T-8	ENHANCED SOUND—22 Electronics Projects for the Audiophile	$11.95
T-10	ACOUSTIC TECHNIQUES FOR HOME AND STUDIO	$18.95

SOUND ENGINEERING, REFERENCE WORKS

B-1	LOUDSPEAKER AND HEADPHONE HANDBOOK	$110.00
MH-1	HANDBOOK FOR ELECTRONICS ENGINEERING TECHNICIANS (2nd Ed.)	$49.95
MH-4	AUDIO ENGINEERING HANDBOOK	$86.95
NE-1	NEW EARS: A Guide to Education and the Recording Sciences	$11.95
PH-1	HANDBOOK OF SIMPLIFIED SOLID-STATE CIRCUIT DESIGN	$39.95
RR-1	1990 ARRL HANDBOOK FOR THE RADIO AMATEUR	$23.00
S-19	SOUND SYSTEM ENGINEERING	$49.95
S-28	HANDBOOK FOR SOUND ENGINEERS: The New Audio Cyclopedia	$79.95
X-1	PERCEPTION OF REPRODUCED SOUND	$35.00

GUIDEBOOKS AND DATABOOKS

N-6	GENERAL PURPOSE LIN DEVICES (LIN DBK 1)	$16.95
N-7	DATA ACQUIS LIN DEVICES (LIN DBK 2)	$10.95
N-8	SPECIAL PURPOSE LIN DEVICES (LIN DBK 3)	$10.95
N-678	LINEAR DATA BOOKS (3-volume set)	$35.00
N-9	LINEAR APPLICATIONS HANDBOOK	$16.95
P-1A	THE PENGUIN GUIDE TO COMPACT DISCS, CASSETTES AND LPs	$19.95

SPECIAL!
BKL/K: BKAA-2 ($19.95) plus BKAA-4 ($19.95) for $30 ($2 S/H)

BUILDER'S GUIDES, specific (cookbooks)

S-9	REGULATED POWER SUPPLIES	$21.95
S-10	IC OP AMP COOKBOOK	$21.95
S-13	AUDIO IC OP AMP APPLICATIONS	$19.95
S-14	ACTIVE FILTER COOKBOOK	$15.95
S-17	IC TIMER COOKBOOK	$17.95
S-18	TTL COOKBOOK	$14.95
S-26	CMOS COOKBOOK	$18.95

TUTORIAL

BKAA-3/1	AUDIO ANTHOLOGY (Vol. 1)	$16.95
BKAA-3/2	AUDIO ANTHOLOGY (Vol. 2)	$16.95
BKAA-3/3	AUDIO ANTHOLOGY (Vol. 3)	$16.95
BKAA-3/S	AUDIO ANTHOLOGY (Vols. 1-3)	$42.00
BKAA-5	LOUDSPEAKERS: The Why & How of Good Reproduction	$6.95
BKAA-6	THE WILLIAMSON AMPLIFIER	$4.95
D-3	MUSIC, PHYSICS AND ENGINEERING	$8.95
P-8	INTRODUCING MUSIC	$5.95
S-4	UNDERSTANDING IC OPERATIONAL AMPLIFIERS	$12.95
S-29	PRINCIPLES OF DIGITAL AUDIO	$29.95
T-7	BASIC ELECTRONICS COURSE	$17.95
T-11	UNDERSTANDING ELECTRONICS (3rd Ed.)	$11.95

LOUDSPEAKERS (see also sound engineering)

BKAA-1	AUDIO AMATEUR LOUDSPEAKER PROJECTS	$20.00
BKAA-2	THE LOUDSPEAKER DESIGN COOKBOOK	$19.95
S-11	HOW TO BUILD SPEAKER ENCLOSURES	$6.95
T-12	DESIGNING, BUILDING AND TESTING YOUR OWN SPEAKER SYSTEM—WITH PROJECTS	$16.95
W-1	HIGH PERFORMANCE LOUDSPEAKERS	$38.95

DICTIONARIES

BKAA-7/S	THE AUDIO GLOSSARY (Softbound)	$9.95
BKAA-7/H	THE AUDIO GLOSSARY (Hardbound)	$17.95
BKAA-7/L	THE AUDIO GLOSSARY (Limited Edition)	$30.00
S-22	MODERN DICTIONARY OF ELECTRONICS	$39.95
T-9	THE ILLUSTRATED DICTIONARY OF ELECTRONICS	$24.95
P-2	DICTIONARY OF ELECTRONICS	$8.95
P-3	A NEW DICTIONARY OF MUSIC	$8.95

NOTE: BOOKS ARE NOT RETURNABLE FOR EXCHANGE OR CREDIT. Prices are subject to change without notice. Please print *in clear block capitals* quantity needed, book number and price. Total the amounts and REMIT IN US $ ONLY by MC/VISA, check or money order. Charge card orders under $10, please include an additional $2.

POSTAGE & HANDLING: In US, please add $1.75 for first book and 50¢ each additional book. In Canada, please add $4.50. Overseas, please include 20% of total order for shipping.

DEALER INQUIIRES INVITED

Qty.	Book No.	Price
	Postage	$
	TOTAL	$

☐ MC ☐ VISA ☐ CK/MO

NAME MAGIC NO.

STREET & NO.

CITY STATE ZIP

MC/VISA EXP.

OLD COLONY SOUND LAB
PO Box 243, Dept. E90, Peterborough, New Hampshire 03458 USA
(603) 924-6371 / 924-6526 / FAX: (603) 924-9467
Answering machine for credit card orders only: (603) 924-6371
before 9:00 a.m., after 4:00 p.m. and weekends.
Have information plus MC/VISA available.

WorldRadioHistory

J. GORDON HOLT

If you had to invent a new language, where would you begin?

Back when high quality sound reproduction was a new idea and **J. Gordon Holt** was a staffer at *High Fidelity* magazine, manufacturers and journalists alike depended on the simple technical quality tests which everyone accepted as the yardsticks for performance. As the industry grew, equipment got better, competition fiercer, and technical reviewing became more crucial to sales managers. Before long, **J. Gordon** began to realize that reviewing was becoming more and more accommodating, and where the reviewers continued to rely on the standard tests, the measurement data began to look more and more alike.

Finally, in frustration, **Holt** left Great Barrington and headed for home in Pennsylvania where he founded *Stereophile* magazine in the spare room of his mother's house. He became convinced that although equipment tests and measurements were important, they no longer accounted for the differences he could hear. Two devices could easily measure the same and yet sound quite different.

Holt abhorred the tendency of the larger magazines to depend almost entirely on measurements, which he saw as a safe way to review without disturbing the manufacturer with any bad news. Not only that, he realized that not one of the US audio publications was publishing reviews that were critical of equipment. In fact, in some cases they were ignoring some flaws.

However, if the reviewer wishes to review how equipment sounds, he faces a severe problem. Our sense of hearing has the smallest vocabulary of any of our five senses. Thus, **Gordon** faced the difficulty of describing sound differences with all too few words with which to do it. He not only had to invent the techniques and disciplines of what has become known as "subjective reviewing" but also the language with which to do it.

Today, the magazine he founded has become a major force in audio quality judgments around the world. And almost all the vocabulary definitions are his work.

Seldom will you have the opportunity to purchase a reference work backed by so much primary research and experience. Few reviewers have spent more time and energy in an honest search for a defined, factual account of what matters in good sound reproduction techniques. In audio equipment reviewing, **J. Gordon Holt** is not only a pioneer but a master.

THE AUDIO GLOSSARY is the first publication of not only a vocabulary for sound description, but also a comprehensive overview of over 1,900 audio terms: technical and subjective. Your copy is waiting—at your favorite dealer—or order direct using the coupon below.

DEALER INQUIRIES INVITED

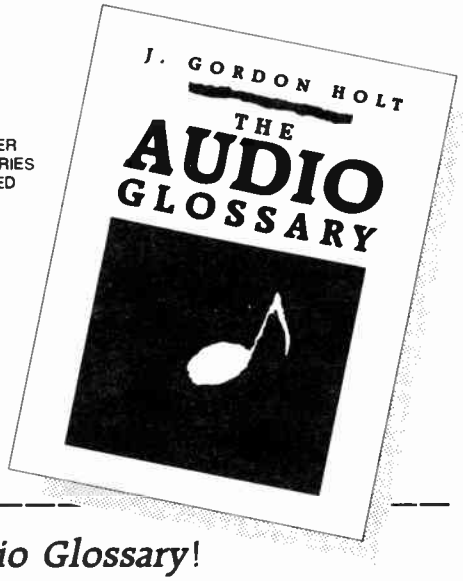

☐ **YES!** Please send me *The Audio Glossary*!

	TOTAL
___Softbound BKAA-7/S @ $9.95	$_____
___Hardbound w/ dust jacket BKAA-7/H @ $17.95	$_____
___Autographed Limited Edition BKAA-7/L @ $30	$_____
Please add $1.75 shipping for first book, 50¢ each add'l	$_____
TOTAL ORDER	$_____

☐ CK/MO enclosed ☐ MC ☐ VISA

NAME _____

STREET & NO. _____

CITY _____ STATE _____ ZIP _____

MC/VISA _____ EXP. _____

OLD COLONY SOUND LAB

PO Box 243, Dept. E90
Peterborough, NH 03458-0243 USA
(603) 924-6371 / 924-6526 / FAX: (603) 924-9467

Answering machine for credit card orders only: (603) 924-6371 before 9:00 a.m., after 4:00 p.m., and weekends. Have information plus MC/VISA available.

• also available at your favorite audio dealer •

WorldRadioHistory

Learn to troubleshoot and service today's computer systems as you build a fully AT-compatible micro, complete with 1 meg RAM and powerful 20 meg hard drive

NEW! Now includes AT-compatible computer!

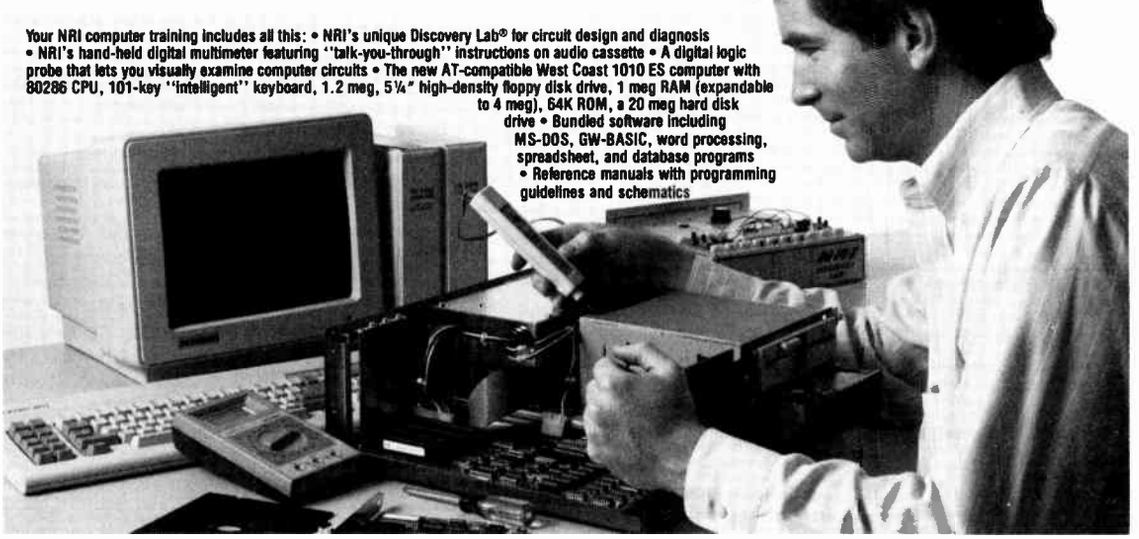

Your NRI computer training includes all this: • NRI's unique Discovery Lab® for circuit design and diagnosis • NRI's hand-held digital multimeter featuring "talk-you-through" instructions on audio cassette • A digital logic probe that lets you visually examine computer circuits • The new AT-compatible West Coast 1010 ES computer with 80286 CPU, 101-key "intelligent" keyboard, 1.2 meg, 5¼" high-density floppy disk drive, 1 meg RAM (expandable to 4 meg), 64K ROM, a 20 meg hard disk drive • Bundled software including MS-DOS, GW-BASIC, word processing, spreadsheet, and database programs • Reference manuals with programming guidelines and schematics

Train the NRI Way—and Earn Good Money Servicing Any Brand of Computer

Jobs for computer service technicians will almost double in the next 10 years according to Department of Labor statistics, making computer service one of the top 10 growth fields in the nation.

Now you can cash in on this exciting opportunity—either as a full-time industry technician or in a computer service business of your own—once you've mastered electronics and computers the NRI way.

NRI's practical combination of "reason-why" theory and hands-on building skills starts you with the fundamentals of electronics, then guides you through more sophisticated circuitry all the way up to the latest advances in computer technology. You even learn to program in BASIC and machine language, the essential language for troubleshooting and repair.

Get Real-World Skills as You Train With a Powerful AT-Compatible Micro—Now With 20 Meg Hard Drive!

To give you hands-on training with the absolute in state-of-the-art computer technology, NRI includes the powerful new West Coast 1010 ES computer as the centerpiece of your training. As you assemble this fully IBM AT-compatible micro from the keyboard up, you actually see for yourself how every section of your computer works.

You assemble and test your computer's "intelligent" keyboard, install the power supply and 1.2 meg, 5¼" floppy disk drive, then interface the high-resolution monitor. But that's not all.

Your hands-on training continues as you install a powerful 20 megabyte hard disk drive—today's most-wanted computer peripheral—now included in your course to dramatically increase the data storage capacity of your computer while giving you lightning-quick data access. Plus you work with exclusive word processing, database, and spreadsheet software, yours to use for your own professional and personal applications.

As you build your computer, performing key demonstrations and experiments at each stage of assembly, you get the confidence-building, real-world experience you need to work with, troubleshoot, and service today's most widely used computer systems.

No Experience Needed, NRI Builds It In

This is the kind of practical, hands-on experience that makes you uniquely prepared to take advantage of today's opportunities in computer service. You learn at your own convenience in your own home. No classroom pressures, no night school, no need to quit your present job until you're ready to make your move. And all throughout your training, you've got the full support of your personal NRI instructor and the NRI technical staff, always ready to answer your questions and help you whenever you need it.

FREE 100-Page Catalog Tells More

Send today for NRI's big, 100-page, full-color catalog that describes every aspect of NRI's innovative computer training, as well as hands-on training in robotics, video/audio servicing, electronic music technology, security electronics, telecommunications, and other growing high-tech career fields. If the coupon is missing, write to: NRI School of Electronics, McGraw-Hill Continuing Education Center, 4401 Connecticut Avenue, NW, Washington, DC 20008.

IBM and AT are registered trademarks of International Business Machines Corporation

SEND COUPON TODAY FOR FREE NRI CATALOG!

NRI

McGraw-Hill Continuing Education Center
4401 Connecticut Avenue, NW, Washington, DC 20008

For Career courses approved under GI Bill ☐ check for details.

☑ CHECK ONE FREE CATALOG ONLY

- ☐ **Computers & Microprocessors**
- ☐ TV/Video/Audio Servicing
- ☐ Robotics
- ☐ Electronic Music Technology
- ☐ Security Electronics
- ☐ Digital Electronics Servicing
- ☐ Electronic Circuit Design
- ☐ Computer Programming
- ☐ Telecommunications
- ☐ Basic Electronics
- ☐ Bookkeeping and Accounting
- ☐ Building Construction
- ☐ Automotive Servicing
- ☐ Air Conditioning Heating & Refrigeration
- ☐ Small Engine Repair
- ☐ Electrician
- ☐ Locksmithing
- ☐ Travel Careers
- ☐ Writing
- ☐ Paralegal

Name (Please print) Age

Street

City/State/Zip 140-110

We'll give you tomorrow. Accredited Member, National Home Study Council

WorldRadioHistory

KITS from Old Colony Sound Lab

Post Office Box 243 • Peterborough, NH 03458-0243
(603) 924-6371 / 924-6526 FAX: (603) 924-9467

Answering machine for credit card orders only:
(603) 924-6371 before 9:00 a.m., after 4:00 p.m. and weekends.
Have all information plus MC/VISA available.

ORDERING INFORMATION: Postpaid in US; in Canada, please add 10% of total order; overseas, add 20%. Shipment is via UPS—please provide street address. If you cannot receive UPS delivery, please include an additional $2 for insurance service via parcel post. We cannot accept responsibility for safety or delivery of uninsured parcel post. UPS next and second day air are available to some areas upon request. **REMIT IN US $ ONLY** by MC/VISA, check or money order. Absolutely no CODs.

PRICES SUBJECT TO CHANGE WITHOUT NOTICE

SPEAKER SAVER, FILTER

KH-2: SPEAKER SAVER AND OUTPUT FAULT DETECTOR. [3:77] This basic two-channel kit includes board and all board-mounted components for control circuitry and power supply. It features turn-on and -off protection and fast opto-coupler circuitry that prevents transients from damaging your system. The output fault detector has additional board-mounted components for speaker protection in case of amplifier failure. **$65**

KF-6: 30Hz RUMBLE FILTER. [4:75] This kit implements a 1975 design for a low frequency garbage filter. The filter knee is set to 30Hz. Roll-off below that knee is the 18dB/octave characteristic of its three pole design. Gain for the filter is unity (0dB) but can be simply adjusted for up to 12dB of gain. The reprint of the article explores the use of the filter with other components in crossovers (see kits SBK-C1A, C1B). It shows how to obtain slopes of 6, 12 or 18dB in high and low pass filters. The kit contains all parts for building a two channel HPF including a board (3" × 3"), quad op amp IC, precision resistors and capacitors. Requires a bipolar supply of ± 15V—the KE-5 is suitable. **$30**

AIDS & TEST EQUIPMENT

KK-3: THE WARBLER OSCILLATOR. [1:79] This unit will produce a swept signal covering any ⅓-octave between 16Hz and 20kHz. The total harmonic distortion at the output is less than 1.5%. The output voltage is adjustable from 0 to 1V. When used with a microphone it is as effective as a pink noise source in evaluating speaker system performance. It also reveals the listening environment's effect on sound through reflection and absorption. The sweep rate is set at about 5Hz. The kit includes 3¼" x 3⅜" circuit board, transformer, all parts and article reprint. **$70**

KH-7: GLOECKLER PRECISION 101dB ATTENUATOR. [4:77] All switches, 1% metal film and 5% carbon film resistors to build prototype. Chassis, input/output jacks are not included. **$65**

KC-5: GLOECKLER 23-POSITION LEVEL CONTROL. [2:72] All metal film resistors, shorting rotary switch and two boards for a two-channel, 2dB per step attenuator. Choose 10k or 250kΩ. **$48**

KL-6: MASTEL TIMERLESS TONE BURST GENERATOR. [2:80] All parts with circuit board. No power supply. **$24**

KP-2: TWO TONE INTERMODULATION TEST FILTER. [1:82] This filter is designed to isolate the two high frequency tones at an amplifier's input from low frequency intermodulation products present at the output. The high pass filter corners at 2kHz and rolls off at 24dB/octave. A 5kHz signal at the low pass input will be down at the output by 80dB. An article reprint detailing design and use is included with the kit. All parts are supplied, including quad op amp IC, circuit board and precision resistors and capacitors. **$26**

SBK-D2: WITTENBREDER AUDIO PULSE GENERATOR. [SB 2:83] All parts, board, pots, power cord, switches and power supply included. **$80**

SBK-E4: MULLER PINK NOISE GENERATOR. [SB 4:84] All parts, board, 1% MF resistors, capacitors, ICs, toggle switches included. No battery or enclosure. **$35**

CROSSOVERS

KC-4A: ELECTRONIC CROSSOVER, KIT A. [2:72] Single channel, two-way. All parts including C-4 board and LF351 ICs. Choose frequency of 60, 120, 240, 480, 960, 1920, 5k or 10k. KE-5 or KF-3 supplies are suitable. **$14**

KC-4B: ELECTRONIC CROSSOVER, KIT B. [2:72] Single channel, three-way. All parts including C-4 board & LF351 ICs. Choose two frequencies of 60, 120, 240, 480, 960, 1920, 5k or 10k. **$18**

KK-6L: WALDRON TUBE CROSSOVER LOW PASS. Single channel, 18dB/octave, Butterworth [3:79], includes three-gang pot. Choose 1: 19-210; 43-465; 88-960; 190-2100; 430-4650; 880-9600; 1900-21,000 hertz. **$60**

KK-6H: WALDRON TUBE CROSSOVER HIGH PASS: Single channel, 18dB/octave, Butterworth [3:79], includes three-gang pot. Please specify 1 of the frequencies in KK-6L. No other can be supplied. **$62**

KK-7: WALDRON TUBE CROSSOVER POWER SUPPLY. [3:79] Includes board, transformer, fuse, semiconductors, line cord, capacitors to power four tube crossover boards (8 tubes), 1 stereo bi-amped circuit. **$110**

SBK-A1: LINKWITZ CROSSOVER/FILTER. [SB 4:80] Three-way crossover/filter/delay. 24dB/octave at 100Hz and 1.5kHz and 12dB/octave below 30Hz, with delayed woofer turn-on. Use the Sulzer supply KL-4A with KL-4B or KL-4C.
Per channel **$75** Two channels **$140** SBK board only **$25.50**

SBK-C1A: ELECTRONIC TWO-WAY CROSSOVER. [SB 3:82] 30Hz filter with WJ-3 board & 4136 IC adapted as one channel crossover. Can be 6, 12 or 18dB/octave. Choose frequency of 60, 120, 250, 500, 1k, 2k, 5k or 10k. The KL-4A/KL-4B or KW-3 are suitable supplies. **$32**

SBK-C1B: THREE-WAY, SINGLE CHANNEL CROSSOVER. [SB 3:82] Contains 2 each SBK-C1A. Choose high & low frequency. **$60**

SYSTEM ACCESSORIES

CDDA. Reusable soft vinyl Disc Ade CD damper from Apature. **$18.95**

HDTT. Mod Squad Tiptoes decouple system components from surface beneath, providing greater sound resolution. Special alloy cones, ½" high, 1½" in diam., are placed point down under speakers, CD players, turntables, to optimize stabilization. 3 per component recommended. **$6** ea. **3/$17**

KW-3: BORBELY IMPROVED POWER SUPPLY. [1:87] This single channel, low impedance supply was designed for the exacting requirements of Erno Borbely's moving-coil preamp [2:86, 1:87]. The design utilizes polypropylene caps and 1% metal film resistors. LM317/337s are used in the preregulator and Signetics NE5534 in the op amp regulator. The kit includes a low profile 24V toroidal transformer, 4¼" × 5½" circuit board and all board-mounted components. Chassis and heatsink are not included. **$135** Two or more, **$128**

KE-5: OLD COLONY POWER SUPPLY. Unregulated, ± 18V @ 55mA. **$20**

KF-3: GATELY REGULATED SUPPLY. ± 18V or ± 15V @ 100mA. **$52**

KL-4A: SULZER POWER SUPPLY REGULATOR. **$40**

KL-4B: SULZER DC RAW SUPPLY. ± 20V @ 300mA. **$60**

KL-4C: SULZER DC SUPPLY w/ toroidal transformer. **$85**

KH-8: MORREY SUPER BUFFER. [4:77] All parts, 1% metal film resistors, NE531 ICs, and PC board for two-channel output buffer. **$22**

SBK-E2: NEWCOMB NEW PEAK POWER INDICATOR. [SB 2:84] All parts & board, new multicolor bar graph display; red, green & yellow LEDs for one channel. No power supply needed. **$14** Two for **$22**

KL-2: WHITE DYNAMIC RANGE & CLIPPING INDICATOR. [1:80] One channel, including board, with 12 indicators for preamp or crossover output indicators. Requires ± 15V power supply @ 63 mils.
Single channel **$58** Two channels **$110** Four channels **$198**

KW-1: MAGNAVOX CD PLAYER MODIFICATION. Improves frequency response. Includes two Signetics NE5535s, two Panasonic HF series 330μF capacitors and four 3.92k, 1% metal film resistors. **$12**

KW-2: MAGNAVOX CD PLAYER MODIFICATION. As above, but with two AD-712 op amps in addition to the NE5535s. **$16**

KX-1A: DISC STABILIZER. Set of 3 Sorbothane feet, 3 Tiptoes and Mod Squad's Disc Damper with 15 centering rings. **$70**

KY-1: BEERS' BUDGET CD MOD. [1:89] Kit provides POOGE-4 improvements without additional wiring or circuit boards. Complete parts for assembling amplifier modules and replacing DAC components. Article reprint included. Soldering skills required: not recommended for beginners. **$95**

What's included? Kits include all the parts needed to make a functioning circuit, such as circuit boards, semiconductors, resistors and capacitors. Power supplies are not included in most cases. Unlike kits by Heath, Dyna and others, the enclosure, faceplate, knobs, hookup wire, line cord, patch cords and similar parts are not included. Step-by-step instructions usually are not included, but the articles in *TAA* and *SB* are helpful guides. Article reprints are included with the kits. Our aim is to get you started with the basic parts—some of which are often difficult to find—and let you have the satisfaction and pride of finishing your unit in your own way.

FATHER OF THE MICROCHIP

Robert Noyce who, together with Jack Kirby, was the co-inventor of the integrated circuit, died on June 3, 1990.

Noyce was born in Iowa on 12 December 1927, the son of a Congregational minister. He was an outstanding student in high school, showing particular promise in mathematics and science subjects. He read physics and mathematics at Grinnell College in his hometown and gained his bachelor's degree in the year William Shockley invented the junction transistor (the point-contact transistor had been invented a year earlier by John Bardeen, Walter Brattain and Shockley).

While still an undergraduate, Noyce became interested in solid-state physics, then taught at Grinnell by Grant Gale. His particular interest lay with the transistor, a device which would be part of his life for 42 years. After graduating from Grinnell, he went to the Massachusetts Institute of Technology where he took his doctorate in physical electronics in 1953.

Noyce began his working life as a research engineer at the Philco Corporation in Philadelphia, which had just set up a new center for research into semiconductors. In 1956, Shockley set up his semiconductor laboratory in Mountain View, California, where Noyce and a number of other noted physicists joined him almost from the start.

However, Shockley, unlike many of his contemporaries did not combine his scientific brilliance with entrepreneurship and he was, moreover, a difficult man to get on with. Consequently, Noyce and a group of colleagues left Shockley to found a semiconductor division at the Fairchild Camera and Instruments Corporation. (Another illustrious figure at Fairchild, working under Noyce, was Charlie Sporck, now president of National Semiconductor.)

At that time, the circuit design requirements, particularly in computers, of thousands of connections between transistors and other components were getting the better of electronics engineers. While at Fairchild, Noyce conceived a way of eliminating the cumbersome wiring by etching the transistors and other components onto a single slice of silicon and connecting them by metallic lines.

While Noyce was developing his version of the integrated circuit, Jack Kirby, a staff scientist at Texas Instruments, came, completely independently, to the same development. Consequently, both men are recognized by the US Patent Office as inventors of the microchip. It is now history that their invention revolutionized electronics, made possible comprehensive increases in computer power, and gave the world many new products, from pocket calculators through microwave ovens to computerized flight plans for civil and military aircraft.

Despite his success at Fairchild, Noyce believed he also had a contribution to make to the commercial world and in 1968 he and a colleague, Gordon Moore, left Fairchild to form the Intel Corporation in California's Silicon Valley. Under his leadership, Intel developed and marketed the first central processing unit (CPU), or microprocessor, which is used, for example, as part of an automatic control system or as the main element of a microcomputer.

Unlike Shockley, Noyce proved himself to be an entrepreneur *par excellence* as well as a brilliant scientist, and he soon became a distinguished figure in the expanding world of computers and allied equipment. He played a prominent role in the commercial world of electronics and became a spokesman and lobbyist for the US semiconductor industry. At the time of his death he was president and chief executive of Sematech Inc., a research consortium set up to attempt to catch up with Japanese developments in semiconductor manufacturing. He was honored by the US government on a number of occasions: in 1980 he received the National Medal of Science from President Jimmy Carter and in 1987 the National Medal of Technology from President Ronald Reagan. ■

Published by Audio Amateur Publications, Inc.

Editor/publisher: Edward T. Dell, Jr.
Editorial Offices:
305 Union St., P.O. Box 876
Peterborough, NH 03458-0876 USA

Telephone: 603-924-9464 *(National*
or +1 (603) 924-9464 *(International)*
FAX: (603) 924-9467 *(National)*
or +1 (603) 924-9467 *(International)*
Advertising: Rally Dennis
Telephone: (603) 924-9750
FAX: (603) 924-9467
Subscriptions: Katharine Gadwah
Elektor Electronics USA
Post Office Box 876,
Peterborough, New Hampsire 03458
Subscriptions to *Elektor Electronics USA* are available **ONLY** in the fifty United States, Canada, Puerto Rico, the Virgin Islands and those Pacific territories adminstered by the United States of America.

European Offices:
Elektuur BV
Postbus 75
6190 AB BEEK
The Netherlands
Telephone: 011 31 4490 89444
Telex: 56617 (elekt nl)
FAX: 011 31 4490 70161
Managing Director: M.M.J. Landman

Overseas Editions:
FRANCE
Elektor sarl
Les Trois Tilleuls
B.P. 59; 59850 NIEPPE
Editors: D.R.S. Meyer
G.C.P. Raedersdorf
GERMANY
Elektor Verlag GmbH
Susterfeld Strasse 25
5100 AACHEN
Editor: E.J.A. Krempelsauer
GREECE
Elektor EPE
Kariskaki 14
16673 Voula—Athena
Editor: E. Xanthoulis

INDIA
Elektor Electronics PVT Ltd
Chhotani Building
52C, Proctor Road, Grant Road (E)
BOMBAY 400 007
Editor: Surendra Iyer
ISRAEL
Elektorcal
P O Box 41096
TEL AVIV 61410
Publisher: M. Avraham
NETHERLANDS
Elektuur BV
Peter Treckpoelstraat 2-4
6191 VK BEEK
Editor: P.E.L. Kersemakers
PAKISTAN
Electro-shop
35 Naseem Plaza
Lasbella Chawk
KARACHI 5
Editor: Zain Ahmed
PORTUGAL
Ferreira & Bento Lda.
R.D. Estef-83-ni, 32-1°
1000 LISBOA
Editor: Jeremias Sequeira

SPAIN
Resistor Electronica Aplicada
Calle Maudes 15 Entio C.
28003 MADRID
Editor: Agustin Gonzales Buelta
SWEDEN
Electronic Press AB
Box 5505
14105 HUDDINGE
Editor: Bill Cedrum
UNITED KINGDOM
Down House
Broomhill Road
LONDON SW18 4JQ
England UK
Editor/Publisher: Len Seymour

Printed in the United States of America.

ISSN: 1051-5690

WorldRadioHistory

ELECTRONICS SCENE

AUDIO and VIDEO POLLUTION CONTROL

Electrical pollution creates havoc for audio and video systems. Power line electrical noise and hash often cause program distortion or disruption and erratic component performance. High-voltage spikes from appliances or lightning may damage expensive hardware.

Many systems create their own pollution. Power amp, preamp or high performance TV may interact over the AC power line, degrading an otherwise flawless program.

Electronic Specialists' recently-improved Magnum Isolator is designed to control audio or video pollution. Featuring four individually quad-PI filtered AC sockets, it also incorporates a heavy duty 39,000A surge spike suppressor to further reduce program distortions and disruptions.

The unit can protect an 1,875W system load from pollution. Each of the four sockets can handle up to a 1kW load.

The Model ISO-17 is available for $291.95 from Electronic Specialists, Inc., 171 South Main St., Natick, MA 01760, (800) 225-4876.

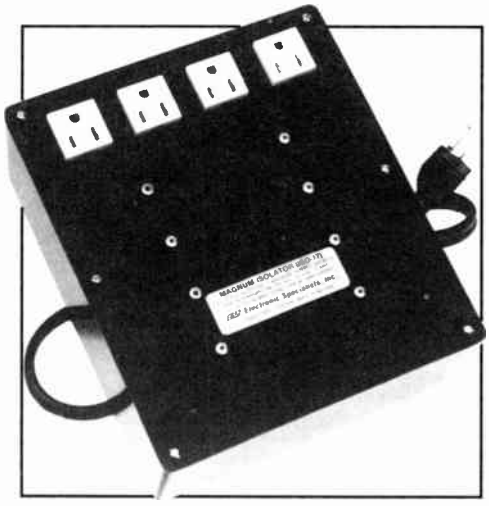

VEGA UHF SYSTEM RECEIVES FCC APPROVAL

Vega's new Pro Plus UHF wireless microphone system has received FCC authorization, and is now available to consumers.

Part of the new Series 600 line, the UHF system debuted at the National Association of Broadcasters (NAB) convention earlier this year, and includes the R-662 receiver and T-677 transmitter. UHF operation provides relief from VHF frequency congestion problems, and allows addition of dozens of systems without affecting existing VHF equipment.

The system features DYNEX™ III audio processing with lower distortion and up to 35dB increased signal-to-ratio. The T-677 bodypack transmitter delivers 150mW of RF output power and provides range up to 1,700 feet.

The selectable four-frequency R-662 receiver offers operational diversity. The receiver can use 115/220V AC, external DC power, or optional battery packs. It also offers an optional rack mount adapter and several types of high performance remote antennas, providing installation versatility.

Vega is a supplier of high-technology wireless systems to professional markets worldwide, and is a subsidiary of Mark IV Industries, Inc., a New York Stock Exchange company with corporate headquarters in Amherst, NY.

For information contact Vega, 9900 Baldwin Place, El Monte, CA 91731-2204, or call, (818) 442-0782, (800) 877-1771, FAX (818) 444-1342.

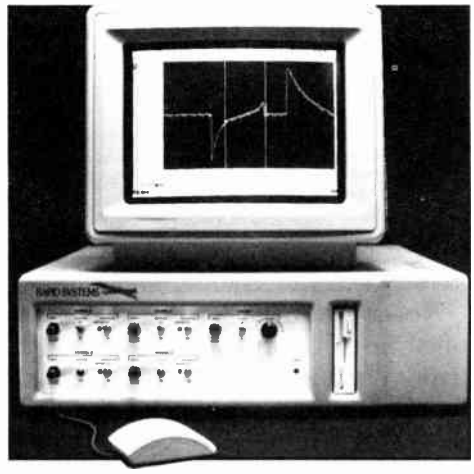

INTEGRATED ARB/DIGITAL SCOPE

Rapid Systems has developed the R1260, a high performance stimulus/response tester, using an integrated AT controller's power. This turnkey instrument includes a full complement of signal output and measurement functions: time domain analysis, audio signal output, arbitrary waveform generation, and white noise output.

The R1260 includes a menu- or mouse-driven VGA color software interface and measurement display. No programming is required. It features a 5MHz arbitrary signal source and two channel, 12-bit, 1MHz, 128k data buffer digital scope in an integrated AT computer package.

Applications are in audio testing, ultrasonic analysis, frequency response testing, and transfer functions.

Product highlights include two independent waveform digitizer channels, two channel, 1MHz, 12-bit, 64k data buffer time domain digitizer, differential or single inputs with waveform averaging, built-in sine, triangle, square, and noise waveforms, waveform creation/editing software, and 3½" drives. The price is $6,995.

For information, write Rapid Systems, Inc., 433 N. 34th St., Seattle, WA 98103, or call (206) 547-8311, FAX (206) 548-0322.

24-CHANNEL DIGITAL I/O BOARD FEATURES READBACK AND DEBOUNCE

A low-cost digital I/O board from **Analog Devices** offers 24 channels, all individually configurable as either inputs or outputs. Code compatible with the company's 6B Series of modular I/O, the 6B50 accepts commands from a host computer and converts to logic levels suitable for any industry-standard digital I/O backplane.

A *readback* command allows the host to check the status of each channel. To prevent erroneous readings of bouncing relays or switches, the 6B50 continuously samples each input once every millisecond, and only returns a signal when five consecutive readings are the same. Applications include distributed process control, pilot plants, and energy management systems.

The 6B50 is 3½" × 6½" and can be panel or rack mounted. The board includes a dedicated microprocessor with memory for exchanging command and status information with the host. Communications options are RS-232 with 6B50-1 and RS-232/RS-485 with the 6B50-2. Both interface with Analog Devices' 16-channel DB-16 and 24-channel DB-24 backplanes.

The DB-16 backplane is $139, the DB-24, $144, while the 6B50-1 is $220 and the 6B50-2 is $250.

Contact Tim Iqbal, Analog Devices, Inc., One Technology Way, PO Box 9106, Norwood, MA 02062-9106, or call (617) 461-3162 for applications assistance.

WorldRadioHistory

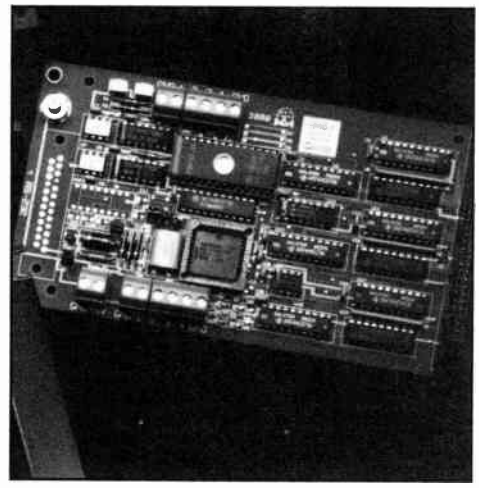

ELECTRONICS SCENE

16-BIT SERIAL DAC OFFERS ZERO-CHIP INTERFACE TO DSPs

Analog Devices' monolithic serial 16-bit digital-to-analog converter (DAC), the AD766, offers a zero-chip direct interface to popular digital signal processors (DSPs), such as the ADSP-2101, TMS320C25, and DSP-56001. Three wires form the complete interface: latch enable, clock, and data.

The AD766's range of DSP-driven applications covers high speed modems and data communications equipment, professional digital audio and mulitmedia workstations, high-resolution industrial test equipment, and signal and arbitary waveform generators. Guaranteed maximum total harmonic distortion at 1kHz (nominal) is −81dB; signal-to-noise ratio from 20Hz–20kHz is 94dB.

Fabricated on a single BiCMOS chip, the AD766 is packaged in a space-saving 16-pin DIP. It features a serial-to-parallel input register, voltage reference, laser-trimmed 16-bit DAC, including thin-film resistors and switching circuitry, and a voltage output amplifier.

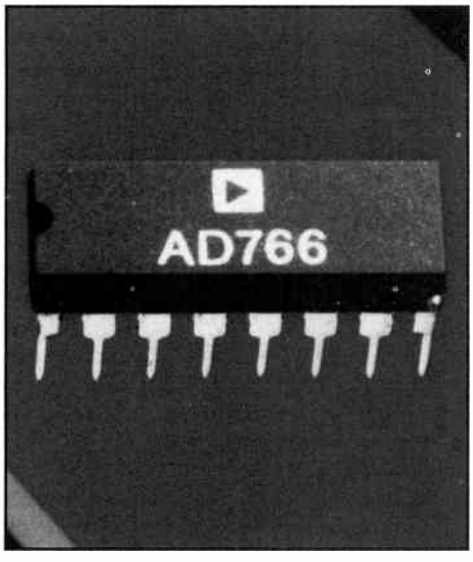

The converter accepts maximum serial bit rates to 12.5MHz and supplies a ±3V full-scale output settling to within 0.0015% of full-scale in 1.5μS. The AD766 is configurable for current-output designs, the AD766 is configurable to provide an output range of ±1mA; settling time is 350nS. No external trimming circuitry is required to achieve 96dB dynamic range.

The converter can be powered from ±5–±12V supplies. With ±5v supplies, the converter's power dissipation is typically 120mW. Available in a 16-pin plastic DIP, prices begin at $11 in 100s; $9.35 in 1,000s. Delivery is from stock for versions specified from 0 to +70C.

Contact Analog Devices, Inc., 181 Ballardvale St., Wilmington, MA 01887, (617) 937-1428.

NEUTRIK Ag EXPANDS MANUFACTURING FACILITIES

Bernhardt Weingartner, founder and CEO of **Neutrik Ag**, has announced expansion plans during the remainder of this year through early 1991, with acquisition of a 22,000 square foot facility to be located on the Isle of Wight, England.

The expansion was necessary due to the 27% sales increase worldwide over the last year, and the anticipated introduction of new products.

The Isle of Wight was selected because of a proven labor force for Neutrik's Test equipment facility located in the same area, according to Weingartner. Neutrik also announced plans to expand the pilot assembly operation at the US plant in Lakewood, NJ in the next few months.

Neutrik Ag manufactures audio connectors, test equipment, and digital information systems. It recently celebrated its 15th anniversary at corporate headquarters in Schann, Liechtenstein (economic territory of Switzerland).

NEW PEAK READING WATTMETER WITH ENHANCED PORTABILITY

Bird Electronic Corp. is now offering its Model 4314B portable peak reading wattmeter designed for measurement of air navigational aids and other pulsed RF systems, such as telemetry, radar, television, as well as peak envelope power (PEP) measurement of SSB and AM signals. The Model 4314B's RF performance specifications are identical to those of Bird Model 4314, which it replaces.

The new instrument measures most types of 50Ω coaxial transmission: pulsed, AM, FM, or CW. A CW/Peak switch on the unit's front allows quick selection of operational mode, with an LED indicating operation. In the CW mode the meter works like a standard Bird Model 43 wattmeter.

An improved power system using two internal 9V alkalin batteries provides twice the previous model's battery life. A push-to-operate battery test switch is located on the front of the unit. The wattmeter can also be powered by a supplied AC power adaptor and weighs only three pounds, 25% lighter than the previous model.

For information, contact Bird Electronic Corp., 30303 Aurora Rd., Cleveland, OH, 44139, or call (216) 248-1200.

WorldRadioHistory

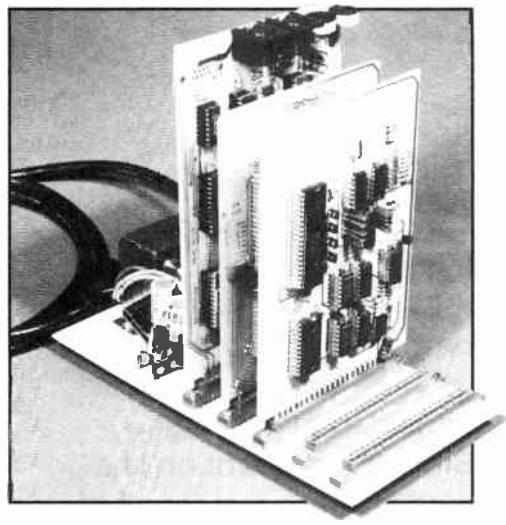

PAIA PRESENTS POWERFUL MIDI/CV SYSTEM

PAIA has begun delivery of the Multiplexer (MUX) cards, which allow expansion of their MIDI/Control Voltage Interface (MCVI). The MCVI and MUX cards provide the power and versatility for configuring systems to convert MIDI to voltages and gate signals, and vice-versa.

Firmware provided with the embedded processor-based system supports a variety of common applications, ranging from pitch control, velocity, pitch wheel, modulation, pressure, foot pedal, volume and data slider of a single synth to control of multiple synths, effects processors, and audio or lighting consoles.

The products are available from the manufacturer in assembled or kit forms with prices beginning at $119.95 for the MCVI and $69.95 for MUX cards. Various support products, such as back-planes and power supplies, are also available.

A free brochure describing the product line and applications is available by contacting PAIA Electronics, Inc., 3200 Teakwood Ln., Edmond OK, 73013, (405) 340-6300.

SMOKE DETECTOR

Although modern construction methods have significantly reduced the risk of a building burning down to the ground, any fire can cause considerable damage. Since fire prevention is a matter of interest for all of us, we present a low-cost smoke detector that signals the start of a fire.

from an idea by R. Lucassen

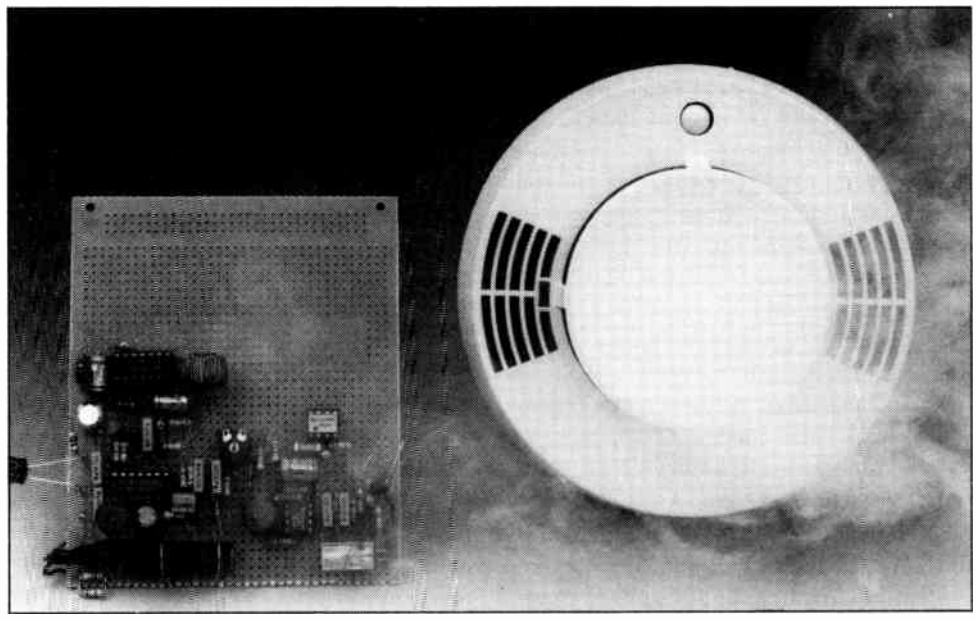

FIRE, as we all know, is extremely dangerous, and it is surprising how little is actually done to prevent it in, say, a modern home. This is in contrast to industrial buildings and offices where complex fire detection and fire extinguishing equipment is installed. Most, if not all, offices these days have at least the minimum (legally required) equipment in the form of one or two fire extinguishers. In many houses, however, the means to extinguish a fire in its early stages are limited to a few buckets of water. And to think that there are a good many potential fire sources in the modern home: a stove can overheat, a frying pan can catch fire, or a short-circuit can start a fire via the electrical wiring. Burning cigarette ends are also notorious causes of serious fires. In short, more attention should be paid to fire prevention.

Preventive measures, such as the use of flame-retardant materials, can be reinforced by the installation of reliable fire detectors at a number of locations in the home. The optical smoke detector presented here is such a detector.

No smoke without fire

Since almost any fire is marked by a lot of (suffocating) smoke, most fire detectors are based on the principle of smoke detection. Basically, two types of smoke detector exist: types with a radio-active sensor, and types with an optical sensor. The latter is used here, since it is reliable and safe. Smoke sensors with a radio-active isotope are less suitable, we feel, for use in a circuit for home construction since they are difficult to obtain, and require special handling precautions. Moreover, the safe disposal of the radioactive material forms a real problem when the sensor is used up.

The optical sensor used here is inexpensive and simple to build. In fact, it is made from a few pieces of scrap material, an infra-red emitting diode (IRED), and two common photodiodes. When built with care and precision, this sensor is at least equal to commercial types as regards sensitivity and reliability.

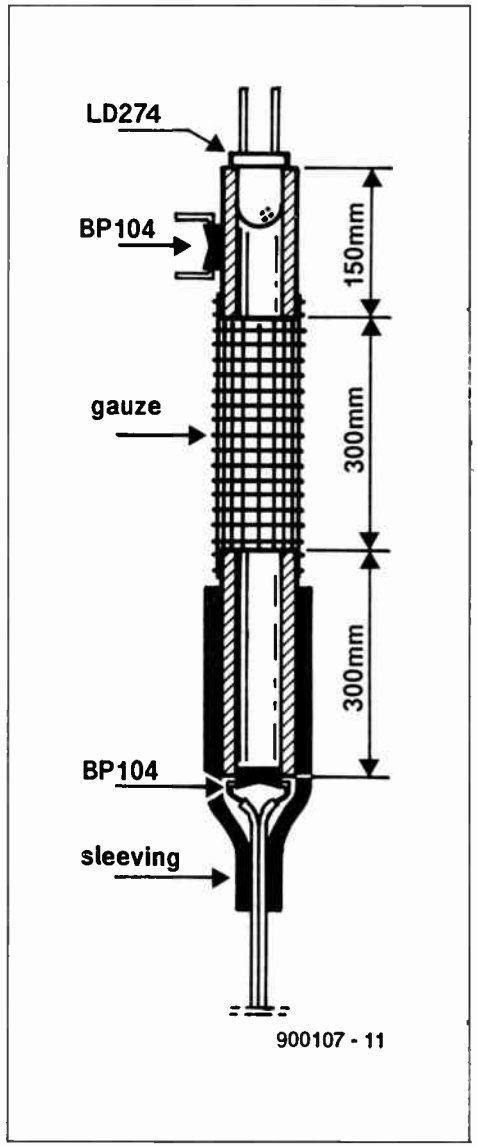

Fig. 1. Construction of the infra-red barrier that forms the sensor of the smoke detector.

WorldRadioHistory

Construction of the sensor

The sensor is housed in a transparent ballpoint holder. Figure 1 shows the general construction of the device. The sensor is based on the principle that smoke attenuates infra-red (IR) light transmitted through air. The higher the smoke density, the lower the IR light intensity on the photodiode. The transmitter, an IRED Type LD274, is fitted in an approximately 1.5-cm long piece of the ballpoint holder. The inside diameter of the holder may have to be drilled out to enable the IRED to be seated firmly. The photodiode is fitted in a similar manner at the end of a 3-cm long tube section which is made light-resistant with a piece of heat-shrink sleeving or black self-adhesive tape. This is not necessary for the transmitter tube, although a few pieces of heat-shrink sleeving may be used to give it the same diameter as the receiver tube. This is done mainly to enable the two tubes to be fitted face to face on a small piece of stripboard, which also accommodates the electronic circuit. Do not make the transmitter tube light-resistant over the full length, since an additional photodiode must be mounted on it to function as a reference device. This diode is fitted at the outside of the transmitter tube, in direct optical contact with the IRED.

The two tubes are fitted on the circuit board at a distance of about 3 cm. To prevent flying insects interrupting the IR beam and causing false alarms, the space between the

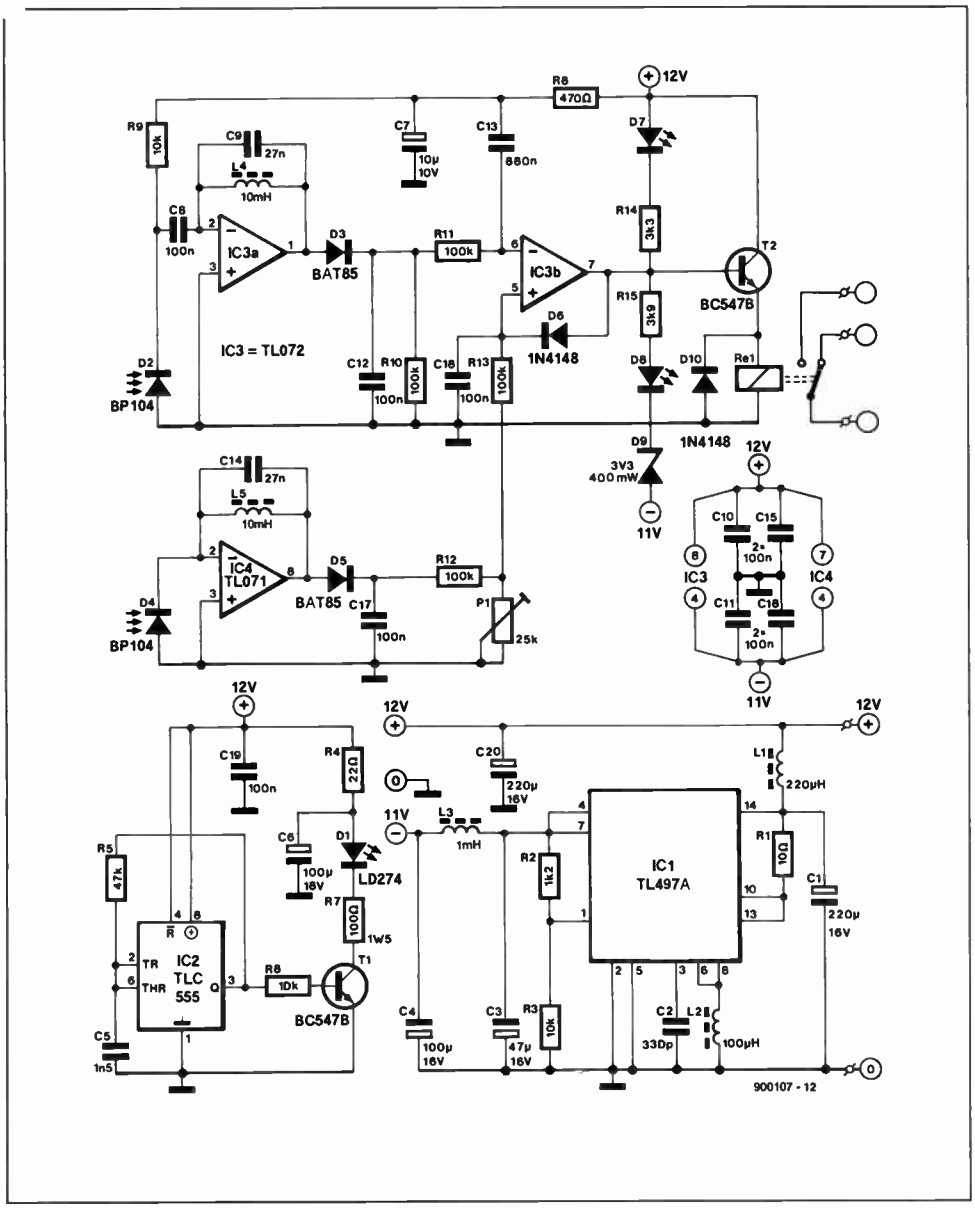

Fig. 2. Circuit diagram of the optical smoke detector. A relay output is provided for ready connection to an existing alarm system.

tubes is screened with a fine wire mesh.

The circuit

The sensitivity of a circuit designed for use as an electronic signalling device requires careful consideration. If the circuit is made too sensitive, false alarms will be generated by the dozen. Conversely, if the sensitivity is too low, a hazardous situation is signalled too late for the necessary action to be taken and prevent further damage. Hence, the design of the smoke sensor must meet demands which are stricter than many other electronic circuits of similar complexity.

The circuit diagram of the smoke detector is shown in Fig. 3. The TL497A in the bottom right-hand corner of the diagram forms part of a compact voltage inverter that converts the +12 V supply voltage into one of −11 V. This allows the symmetrically powered circuit to be used with a single 12-V mains power supply, which may be combined with a rechargeable (emergency) battery.

The optical sensor consists of a transmitter diode and two receiver diodes. The transmitter is driven by a rectangular voltage, which causes it to emit pulsating infra-red light. A pulsating beam is used here instead of a steady one to allow the receiver to be AC-coupled. After a few experiments with a DC-coupled system, this was found to confirm, in a negative sense, the dependency of the IR beam intensity on temperature. As a result, the DC-coupled receiver produced many spurious alarms even on small changes of the ambient temperature. After changing the system into an AC-coupled version, it proved largely immune to temperature variations, mainly because the effect of low-frequency voltage changes is eliminated by filters.

An *L-C* filter is used to limit the bandwidth of the receiver and so render it insensitive to noise and pulse-type interference. Circuit IC2, a Type 555, is set up as an astable multivibrator to provide the switching pulses to the IRED via transistor T1. The pulse frequency used here is about 10 kHz.

The circuit diagram shows two receivers, built around photodiodes D2 and D4. The first, D2, receives the infra-red beam via the smoke slot. The intensity of the incident IR light on the photodiode drops when the beam is attenuated by smoke resulting from fire. The other photodiode, D4, forms a reference device. The IR light intensity it receives is, in principle, fixed, since it is fitted quite close to the IRED, so that the extra beam attenuation caused by smoke is negligible. Since the output signal of D4 is used to provide a reference level in the circuit, the temperature dependence of the transmitter diode has no effect on its operation. When the temperature changes, the reference level changes with it. Note, however, that the output of the IRED drops when the temperature rises. The comparator in the detector compares the output levels of the two amplifiers. When the balance between the two is upset, the circuit produces a smoke alarm.

The amplifier with photodiode D2 is made much more sensitive than that with D4, because the intensity of the IR light it receives is much lower. The sensitivity is determined by R8 and R9. Because of the higher bias voltage across the diode, the light intensity required for a considerable photocurrent is relatively low. Capacitor C7 suppresses spurious pulses produced by, for instance, the switching power supply, the refrigerator, or the vacuum cleaner.

Amplifiers IC3A and IC4 are followed by two simple rectifiers composed of D3-C12-R10 and D5-C17-R12-P1 respectively. The direct voltages provided by these rectifiers are directly related to the measured IR light intensity. The output signals are compared by IC3B, whose output switches a relay via transistor T2.

Two LEDs are used to indicate the state of the smoke detector. The stand-by state is indicated by D7, and the smoke alarm state by D8. Preset P1 determines the level at which the comparator toggles. The higher the sensitivity, the less smoke required to actuate the relay.

Construction

The circuit is easily built on a piece of veroboard or stripboard. When determining the positions of the components on the board, make sure that all ground connections are kept as short as possible, and that the switching power supply is located well away from the input stages. Inductors L4 and L5 should have an internal resistance smaller than 10 Ω. In the prototype, Toko types from the 10RB series were used with good results. The low internal resistance is required to ensure a sufficiently high *Q* (quality-) factor of the *L-C* filter. A low *Q* factor increases the bandwidth and the receiver's susceptibility to noise.

For best results, it may be worth while to experiment with the distance between the two tubes that form the sensor.

Test the circuit by blowing a little cigarette or cigar smoke over the sensor. We found that the sensitivity of the circuit was optimum with P1 adjusted such that the relay is just not energized. Since the relay used has a normally closed and a normally open contact, the smoke detector is readily taken up into almost any larger alarm system via a two-wire connection. ■

World Radio History

DIGITAL CAPACITANCE METER

Have you just invested in a large bag of capacitors with incomprehensible, little or no markings? Then read on. The instrument described here has five capacitance ranges covering a total range of 100 pF to 100µF, can be powered from a single 9-V battery, and has a built-in over-range indicator to prevent ambiguous readings. So, build this capacitance meter before even opening your bag...

E. Barrow

UNMARKED capacitors can be bought very cheaply, but they often remain unused for years because one is not certain of their value. A low-cost capacitance meter to check out the values quickly and with acceptable accuracy is described here. The instrument is simple to build and based on commonly available components.

A bit of theory

If mathematics gives you a migraine you might like to skip this section and jump to the bottom line.

Consider a capacitor C charging through a resistor R from a supply voltage U_s as shown in Fig. 1.

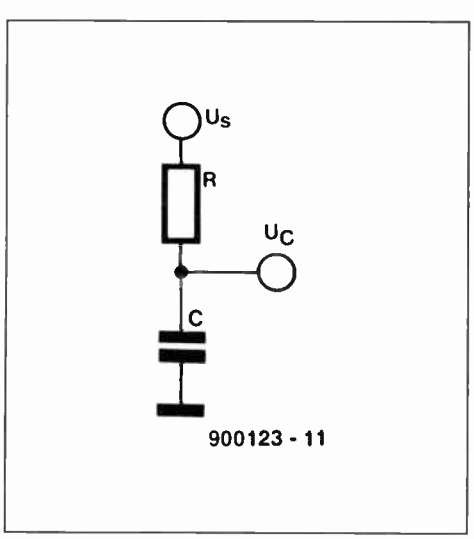

Fig. 1. Basic capacitor charging circuit. Both U_s and U_c are measured w.r.t. ground.

The voltage on the capacitor, U_c, may be written as

$$U_c = U_s\,(1 - e^{-t/RC})$$

where e is the base of natural logarithms, or 2.718282. Rearranging,

$$1 - \frac{U_c}{U_s} = e^{-t/RC}$$

rearranging and taking natural logarithms

$$R \ln\left(\frac{U_s}{U_s - U_c}\right) = \frac{t}{C}$$

If we make R, U_s and U_c constants, then the left-hand side of the equation becomes a constant term. So,

$$\frac{t}{C} = \text{constant} \qquad \text{or} \qquad C = k\,t$$

In other words, by measuring the time taken for an unknown capacitor to be charged to a certain voltage by a fixed potential (see Fig. 2), we can calculate its capacitance if we know the value of k. An even better way is to set the value of k to some round number by altering R. This allows us to measure the charge time and take this value directly as capacitance.

To cover wider values, range switching is done by changing the charging resistor, and so k, by a factor of 10. To keep the resistance within manageable levels, i.e., between 1 kΩ and 1 MΩ, we also switch the clock frequency used to measure the charge time to 1/100th of its value. Thus we get a total range of 5 decades.

The main problem comes when we measure electrolytic and tantalum bead capacitors. These tend to have relatively large leakage currents as their dielectrics are not good insulators like, for instance, polystyrene. So, as the idea postulated by Fig. 1 no longer holds true, it has to be redrawn as in Fig. 3.

To eliminate the error that would arise from the presence of the parallel resistor, the charging resistor can be made smaller to increase the charging current. This minimizes the effect of the leakage resistance, R_e.

The standard by which the charge time is measured is a fixed clock. This clock is also

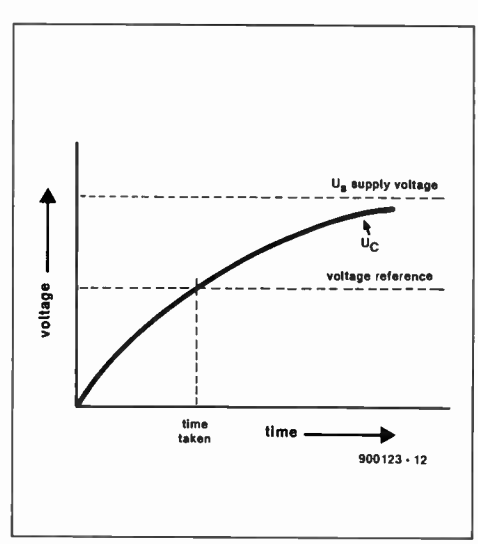

Fig. 2. The charge voltage of a capacitor is essentially a logaritmic (e-) curve.

WorldRadioHistory

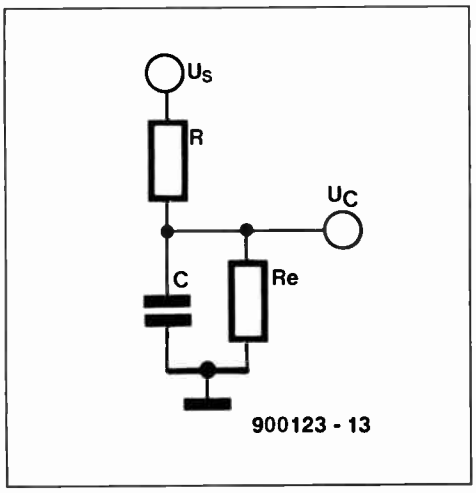

Fig. 3. Accounting for leakage resistance of electrolytic and tantalum capacitors...

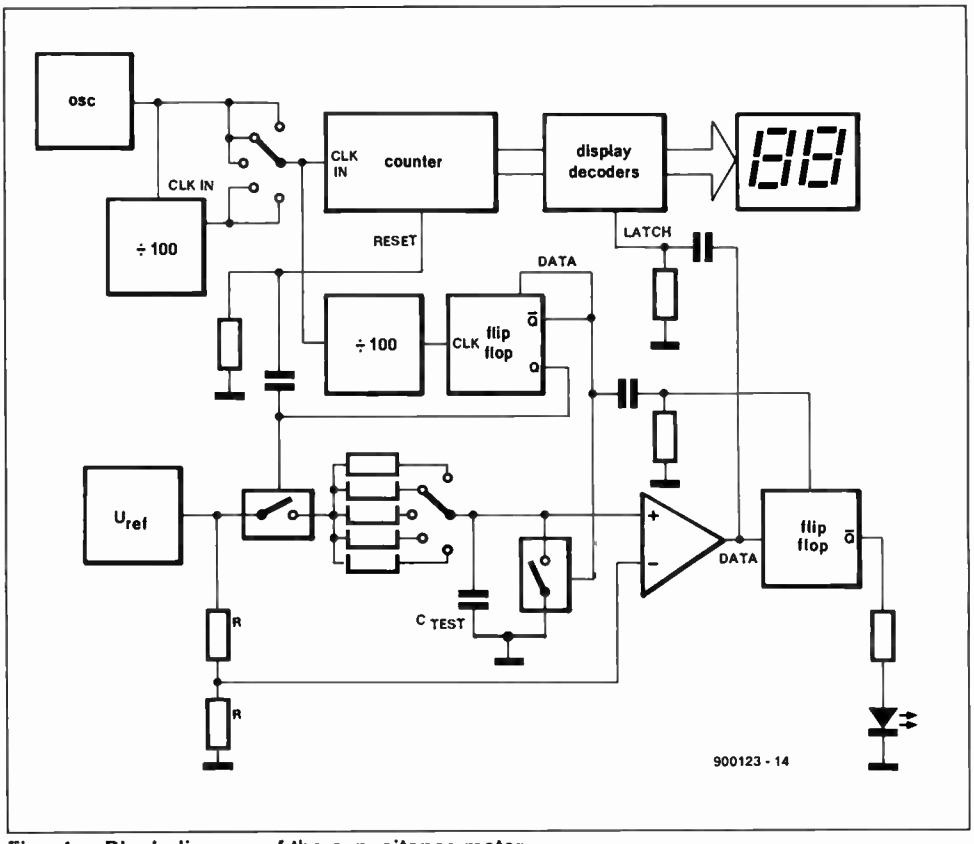

Fig. 4. Block diagram of the capacitance meter.

divided by 100 to give a second reference as mentioned above. After being selected, one of the reference clocks feeds another two counters. The first one is used along with a D-type bistable, configured to divide by 2, to generate all the timing signals, i.e., to reset the counters and the display, and charge and discharge the capacitor. The second counter feeds the display drivers. The whole operation is shown in the block diagram in Fig. 4.

How it works

The practical circuit of the digital capacitance meter is shown in Fig. 6. A timer Type 555 in astable mode generates the fixed clock, which has a frequency of about 20 kHz. This is also divided by a 4518 dual decade counter, IC2, to give a second clock of 200 Hz. One of these frequencies is selected by S1A, and divided by 100 (IC3) and subsequently by 2 (IC4A). The complementary outputs Q and $\overline{Q}$ are used for all timing operations.

To understand the operation of the circuit, let us assume that it has been running a while, and output O is about to go high for the next 100 clock pulses. On this positive edge, a positive pulse is sent to the display counter, IC7, resetting it to the zero state. The bilateral switch, IC5C, is now closed, charging the test capacitor through the charging resistor selected by S1B. A simple voltage reference for the task has been built around zener diode D1.

If the capacitor has a value within the selected range, it will be charged to half the reference voltage within 100 clock pulses. When it reaches this voltage, the output of comparator IC6 goes high, sending a pulse to the latches of the display drivers. This pulse latches the current value of counter IC7, which now appears on the display.

As we have chosen the value of the charging resistors, the value on the display is also equal to the capacitance. After the 100 clock pulses have elapsed, output Q goes low and $\overline{Q}$ goes high. This opens the charging bilateral switch, IC5C, and closes the discharging one, IC5B. So, for the next 100 clock pulses the capacitor is discharged. A clock timing diagram of the operation is shown in Fig. 5.

Although the capacitor under test will never totally discharge, the amount of charge left in the worst possible case is unlikely to affect the accuracy, as it will be less than 1% of the total, and the system is only accurate to 1 count.

When the discharging cycle is started, the output of the comparator is sampled by bistable IC4B. If the output is low, the capacitor is outside the selected range, and the 'overrange' LED lights. If the comparator output is high, the capacitor is within the selected range, and the LED is turned off.

Both IC8 and IC9 are BCD-to-7 segments decoders, set to drive common-cathode LED displays. Note that capacitors C9 and C10 are essential to prevent the glitches produced by

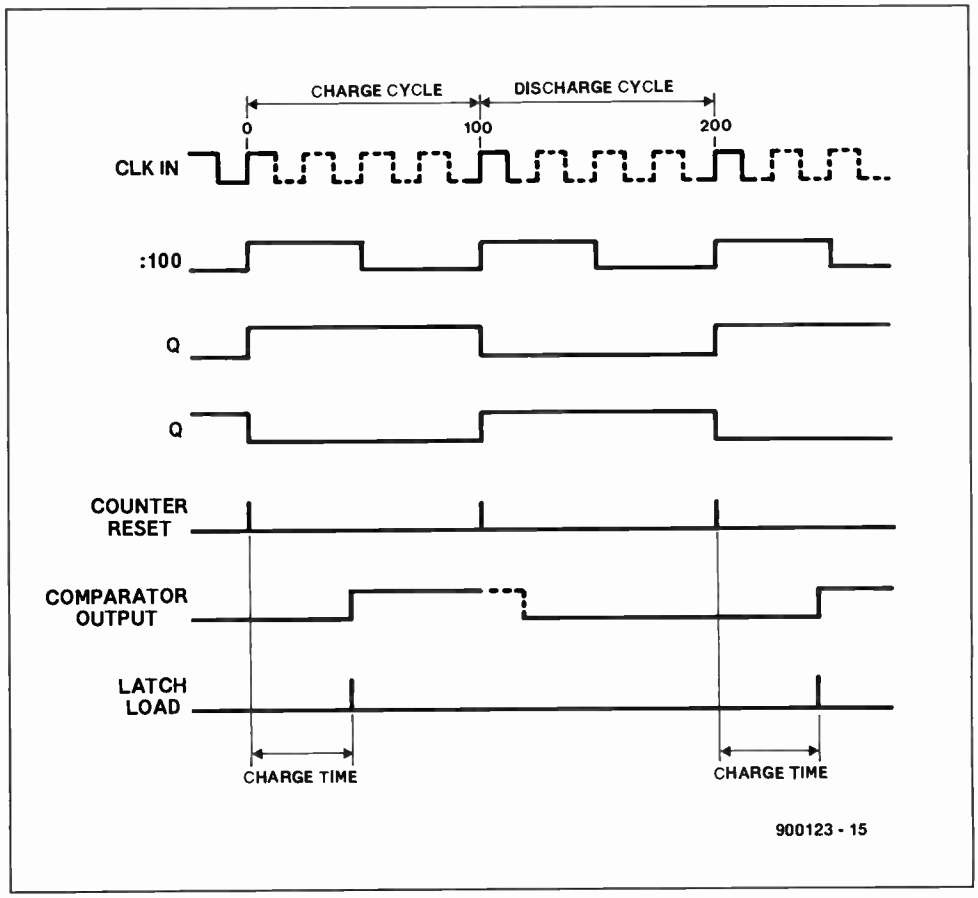

Fig. 5. Timing diagram to illustrate the operation of the circuit.

WorldRadioHistory

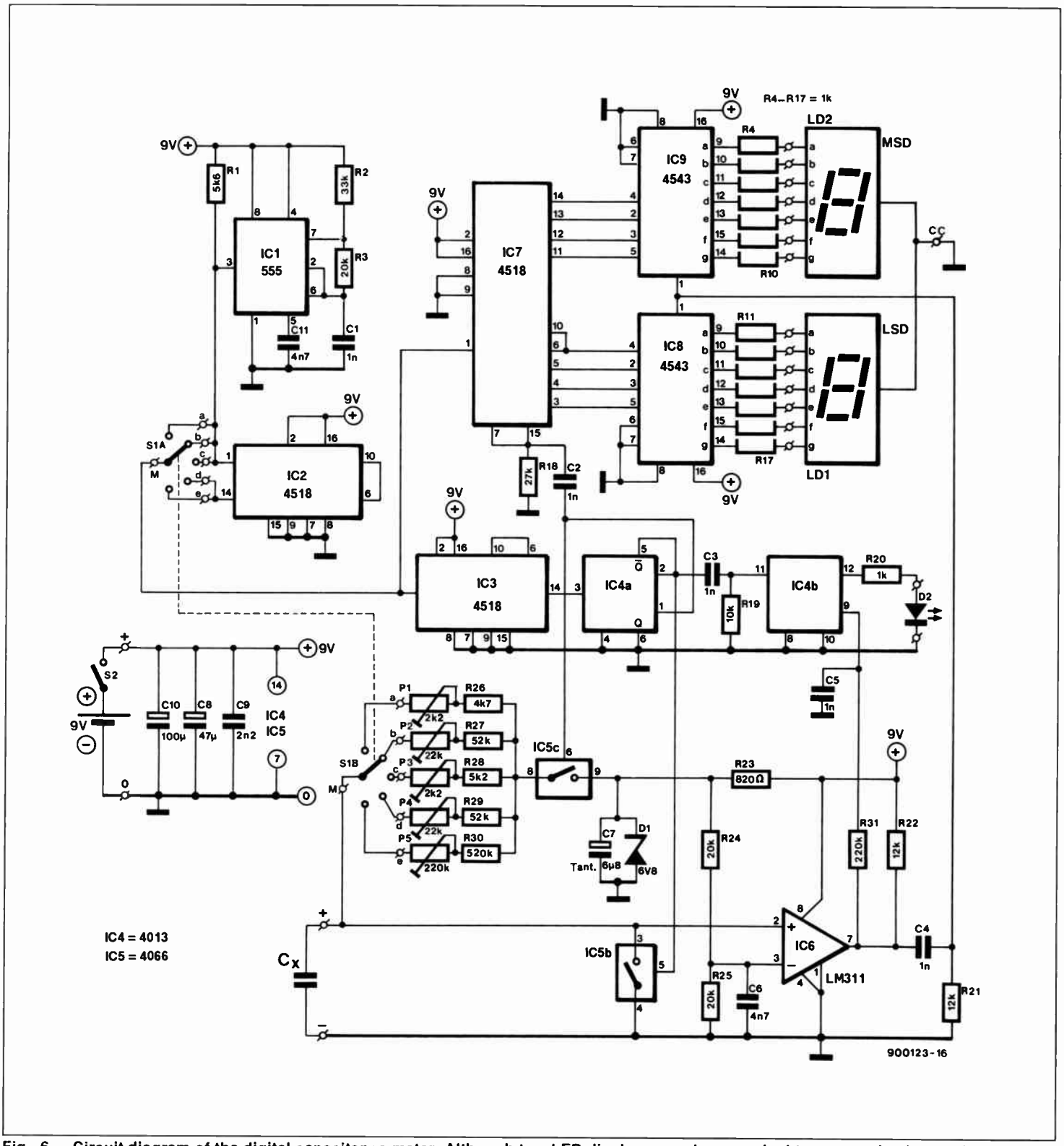

Fig. 6. Circuit diagram of the digital capacitance meter. Although two LED displays are shown, a dual type may also be used.

the digital clocks upsetting the timing of the circuit.

Construction

The author's design for a printed-circuit board is shown in Fig. 7. Firstly, solder the link wires, resistors and the zener diode (remember to get the polarity right). In the prototype, all resistors used were 5% types. Because of the compact nature of this project, use a pencil nose soldering bit and a lot of care (watch out for bridging tracks). Next, fit the capacitors, IC sockets and the presets (vertically mounted types are used here). It is recommended to use polyester capacitors, especially for timing purposes (e.g., C1) as these are stable. The presets are a tight fit and the solder pads are small, so that their legs may need a little filing to fit the holes. Next comes the 2-pole rotary range selecting switch, which is fitted on the front panel of the enclosure. Ribbon cable is suggested to connect the display to the main board. In the prototype, a small off-cut of veroboard was used to mount the display, and a small non-reflective bezel to improve the readability. The display can be almost any dual common-cathode LED type. Four bolts are used to hold the board in place, and a clip or a piece of two-sided adhesive tape to stop the battery from rattling around in the case. Two 4-mm sockets, one red (for +) and one black (for 0 volts), are fitted on the cover plate to connect the unknown capacitor.

Note that if IC sockets are used, C2 and C3 become tight fits, so use disc ceramic types here.

Testing

The completed printed-circuit board may be tested after it has been connected to the battery and the external controls. To test the instrument, a voltmeter is required and, if you

World Radio History

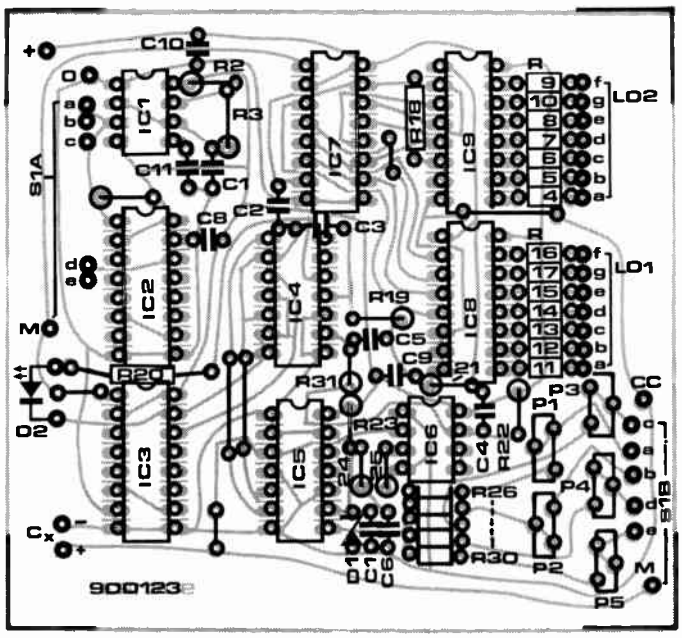

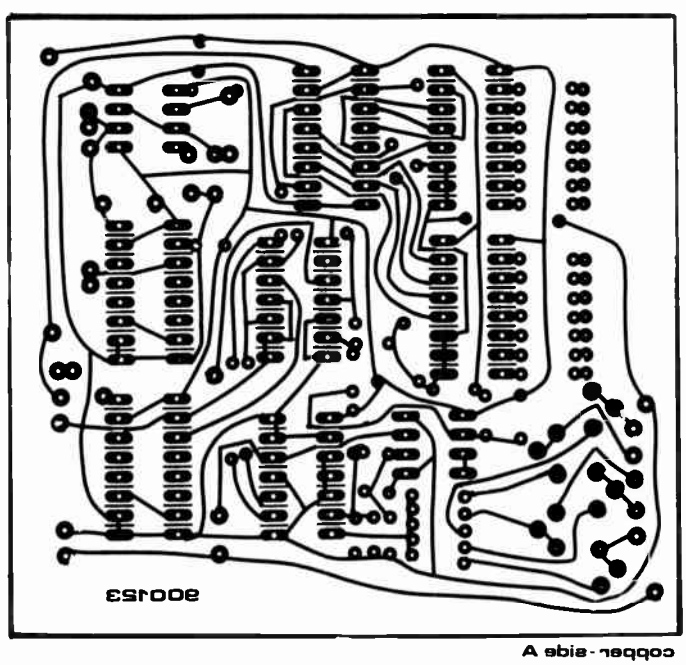

Fig. 7. Author's design of a printed-circuit board for the capacitance meter.

have one, an oscilloscope.

First, check that pin 3 of IC1 is supplying a 20-kHz signal. This check is best made with an oscilloscope, although it is possible, if you have bat-like hearing, to try use a pair of headphones and a series resistor. Also check pin 14 of IC2, which should supply a 200-Hz signal.

Set the range switch to the highest range (100 µF), when pin 14 on IC3 should be toggling at about 2 Hz. Finally, check pins 1 and 2 of IC4, which should be toggling at 1 Hz, out of phase with each other.

To check the charging and discharging mechanism you need a voltmeter. Check that there is a stable 6.8 V across the zener diode. Connect a 68-µF capacitor to the unit. The voltage across it should rise and fall regularly. Similarly, the output of the comparator, pin 7 of IC6, should also be pulsing regularly. If the capacitor is changed by one whose value falls outside the range, the comparator's output should remain low, and the LED turn on.

Setting up

This requires a bit of common sense as each range needs calibration separately. Needless to say that access to a set of reference capacitors or another capacitance meter would make life easy.

For the low ranges, setting up is fairly easy as 1% and 2.5% polystyrene capacitors are widely available. Note that the tolerance of your reference capacitor determines the overall accuracy of the final setting. A good choice is 6.8 nF (1% or 5%) for the first range.

Connect the capacitor and adjust P1 until the display reads the expected value, in this case '68'. If you have a few different capacitors lying around, use an average to adjust the preset. Follow the same procedure for the other ranges, so for the second range try a 68 nF capacitor, and a 680 nF one for the third range.

The top two ranges are a little difficult to calibrate as the type of reference capacitor is practically limited to an electrolytic or a tantalum one. Unfortunately, both these types have a tolerance of typically 20%. Here, it is best to use a mix of available capacitors and average out the readings to get a consensus. Obviously, all polarized capacitors must be connected the right way around. ■

COMPONENTS LIST

Resistors:

1	5kΩ6	R1
1	33kΩ	R2
3	20kΩ	R3;R24;R25
14	1kΩ	R4 – R17
1	27kΩ	R18
1	10kΩ	R19
1	1kΩ	R20
2	12kΩ	R21;R22
1	820Ω	R23
1	4kΩ7	R26
1	52kΩ	R27
1	7kΩ5	R28
1	82kΩ	R29
1	820kΩ	R30
1	220kΩ	R31
2	2kΩ2 preset V	P1;P3
2	22kΩ preset V	P2;P4
1	220kΩ preset V	P5

Capacitors:

5	1nF	C1 – C5
2	4nF7	C6;C11
1	6µF8 tantalum	C7
1	47µF	C8
1	2nF2	C9
1	100µF	C10

Semiconductors:

1	NE555	IC1
3	4518	IC2;IC3;IC7
1	4013	IC4
1	4066	IC5
1	LM311	IC6
2	4543	IC8;IC9
1	6V8 0.4W zener diode	D1
1	LED 5-mm dia.	D2
1	dual CC LED display	LD1;LD2

Miscellaneous:

1	2-pole 5-way rotary switch	S1
1	miniature on/off switch	S2
1	PP3 battery connector	

World Radio History

400-WATT LABORATORY POWER SUPPLY

PART 2: MODES OF OPERATION, CONSTRUCTION AND SETTING UP

Before dealing with the construction of the PSU, this second and final instalment discusses the operation of the four modes in which the instrument can be used.

G. Boddington

THE complete 400-watt power supply as shown in the photograph consists of two identical circuits, which are built on separate printed-circuit boards. Each printed-circuit board holds four pin headers for the interconnection of the circuits and their connections to the read-outs and controls on the front panel. Each PSU has two indication instruments, one for the voltage (connected to pin 6 of K5) and one for the current (connected to pin 3 of K5). The voltage read-out, M1, is connected in parallel with the output terminals, and the current read-out, M2, in parallel with shunt resistor R18.

Header K4 connects the circuit to the two potentiometers for the voltage and current settings, and to the two LEDs that indicate the onset of the limiting circuits.

Modes of operation

As shown in the 'Main Specifications' box in last month's instalment, the power supply is capable of four modes of operation. Each of these is briefly discussed here.

Mode: Single
This mode is the simplest of the four. It requires only one printed-circuit board. Connector K3 need not be fitted, while K2 is wired with three fixed connections: 13-14, 15-16 and 17-18.

Mode: Independent
This mode allows the two PSUs to be used and set independently, without any electrical interconnection (except, of course, the one at the mains socket). Note that although the two circuits are linked via the flatcable between K2 and K3, the connections are broken by switch S2. Each PSU circuit is capable of supplying 0 – 40 V at 0 – 5 A.

Mode: Parallel
This mode is selected by setting the mode switch to 'independent', and connecting the output terminals as shown in Fig. 9. The two high-power diodes prevent the supply with the higher output voltage pumping current into the other. To enable the PSU to deliver its maximum output current of 10 A, the out-

Your Electronics

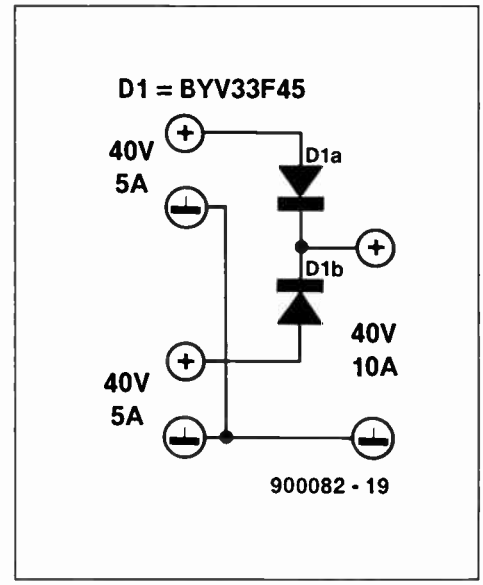

Fig. 9. In parallel mode, two diodes are used to couple the supplies. This arrangement prevents a short-circuit as a result of possible potential differences between the positive output terminals.

put voltages of the two supply circuits should be set to match as closely as possible. As shown in Fig. 9, the Type BYV33F45 from Philips Components contains two high-current Schottky diodes whose cathodes are joined and brought out to a common terminal. This component is supplied in a SOT-186 package. Where the BYV33F45 is difficult to obtain, other high-current rectifier diodes may be used, provided they are rated at a forward current of 5 A and a reverse voltage of 45 V or greater. Another important characteristic is the forward voltage drop of the diodes: evidently, this should be a small as possible since it is not compensated by the supply circuit.

Mode: Tracking

In this mode, one supply circuit functions as the *Master*, and the other the as the *Slave*. The diagrams in Fig. 7 (see part 1) and Fig. 10 show the interconnections made via headers K2-K3 and the mode switch, S2. On the Master PCB, only K2 is used, on the Slave PCB, only K3. The four switch contacts are set to the 'tracking' mode. The positive terminal of the Slave is internally connected to the negative terminal of the Master. The voltage at the positive terminal of the Master is fed to the Slave via R10-R11. Switch contact S2b establishes a common reference potential, so that the positive terminal of the Master and the negative terminal of the Slave are at an equal voltage with respect to the common terminal. Only the signs of the two voltages are different. This mode allows the instrument to be set up as a symmetrical supply (±0 to ±40 V), or one capable of supplying 0 to 80 V. The maximum output current is 5 A in both cases. It should be noted that the internal connection via the flatcable is not suitable for currents exceeding 100 mA or so. For higher currents, an external link must be made on the output terminals. This link can take the form of a small piece of copper or aluminium, cut to size to fit over the terminals.

Limiting circuit		LED			
Master	Slave	Master		Slave	
		U	I	U	I
Current	—	0	1	1	0
Voltage	—	1	0	1	0
—	Current	0	0	1	1

Table 1. Overview of LED indications to signal overload conditions in the two supplies.

The voltage limiting circuit of the Slave works conventionally on the series transistors. The current limiting circuit, however, is coupled to the Master. The connection is made via an optocoupler, IC6, to ensure electrical isolation between the supply circuits of the two opamps. When the current limiting circuit is actuated, the output voltage of the Master drops. Consequently, the output voltage of the Slave drops also. Table 1 shows which LEDs light to indicate the various overload conditions.

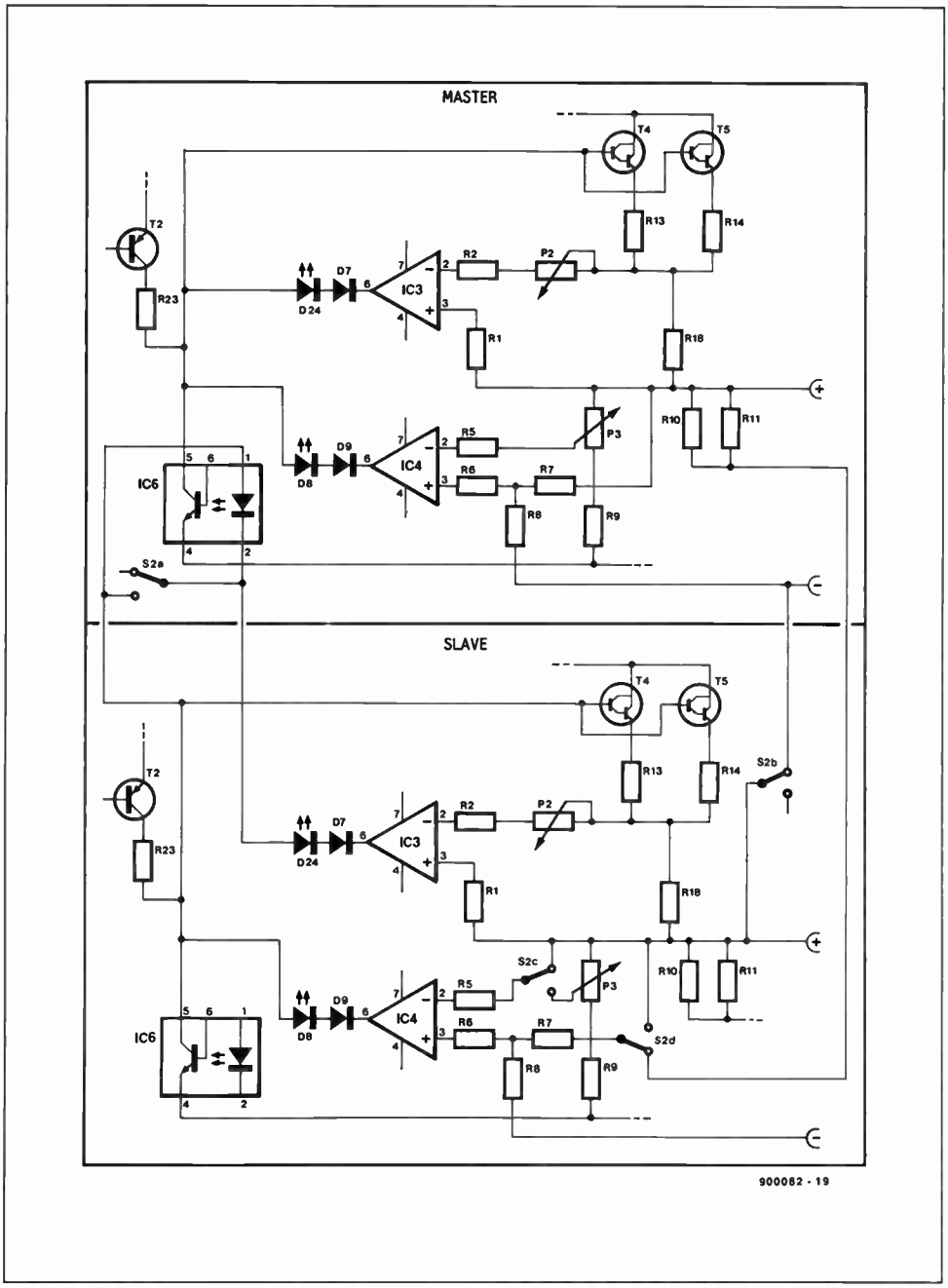

Fig. 10. In tracking mode, the output voltage of the Slave supply is determined by the Master supply.

Construction

Although the printed-circuit board for a single supply is fairly large (see Fig. 11), the construction should not present undue problems. The power resistors must be fitted at a small distance, say, 10 mm, above the board. Fit triac Tri1 with a suitably sized heatsink. Since the triac and a number of other components in the transformer preregulation circuit are at mains potential, great care must be taken to ensure the necessary insulation. Never bolt the triac to the bottom panel of the case, not even when using an insulating washers and a nylon screw. Whatever heat-sink you use, make sure it can not touch the screw or the nut fitted in the corner to secure the PCB.

The opamps and the optocouplers may be soldered direct to the board. Where the suppressor choke, L1, is difficult to obtain, it may be replaced by a home-made one. Simply wind about 40 turns of enamelled copper wire on a 25-mm o.d. ferrite ring core. Apply some two-component glue or epoxy resin to secure the inductor to the PCB.

On completion of the supply boards, run a thorough check on your soldering work. Check that all the polarized components (these include the box headers!) are fitted the right way around. Next, fit the boards, the buffer capacitors, the bridge rectifiers and the mains transformers on the bottom plate of

WorldRadioHistory

COMPONENTS LIST

ATTENTION: two required of each part listed.

Resistors:

4	10kΩ	R1,R2,R5,R6
1	22kΩ	R3
2	4kΩ7	R4,R33
3	2kΩ2	R7,R12,R23
1	8kΩ2	R8
1	470Ω	R9
2	12kΩ	R10,R11
3	0Ω22 5W	R13,R14,R18
1	220Ω	R15
1	330kΩ	R16
2	100kΩ	R17,R20
2	1kΩ	R19,R32
1	220kΩ	R21
1	1kΩ8	R22
1	2kΩ2 1W	R24
1	680Ω	R25
1	47kΩ	R26
2	47kΩ 1W	R27,R28
1	10kΩ 10W	R29
1	150kΩ	R30
1	27kΩ	R31
1	220Ω 1W	R34
1	1MΩ preset H	P1
2	2kΩ2 linear potentiometer	P2,P3a
1	220Ω linear potentiometer	P3b
1	500Ω preset H	P4
1	5kΩ preset H	P5

Capacitors:

1	100nF 100V	C1
1	100nF 400V	C2
8	47nF	C7–C10,C15–C18
2	1000µF 40V	C11,C12
2	10µF 40V	C13,C14
2	1nF 63V	C19,C21
1	330pF	C20
1	100pF	C22
1	2µF2 63V	C23
1	100nF	C24
1	470µF 63V	C25
1	10,000µF 63 V	C26

Semiconductors:

4	33V 1W zener diode	D1–D4
1	15V 0.4W zener diode	D6
2	1N4148	D7,D9
2	red LED (5mm)	D8,D24
10	1N4001	D10,D11, D16–D23
4	1N4004	D12–D15
1	ER900	Di1
1	100V 25 A bridge rectifier (Motorola BYW61)	B1
2	BC547B	T1,T3
1	BC557B	T2
2	BDV65B	T4,T5
1	TIC263D	Tri1
1	TIC206D-P	Tri2
1	7812	IC1
1	7912	IC2
2	LM741	IC3,IC4
1	CNY17-2	IC5
1	TIL111	IC6

Miscellaneous:

1	choke 100µH 6 A (SFT1250)	L1

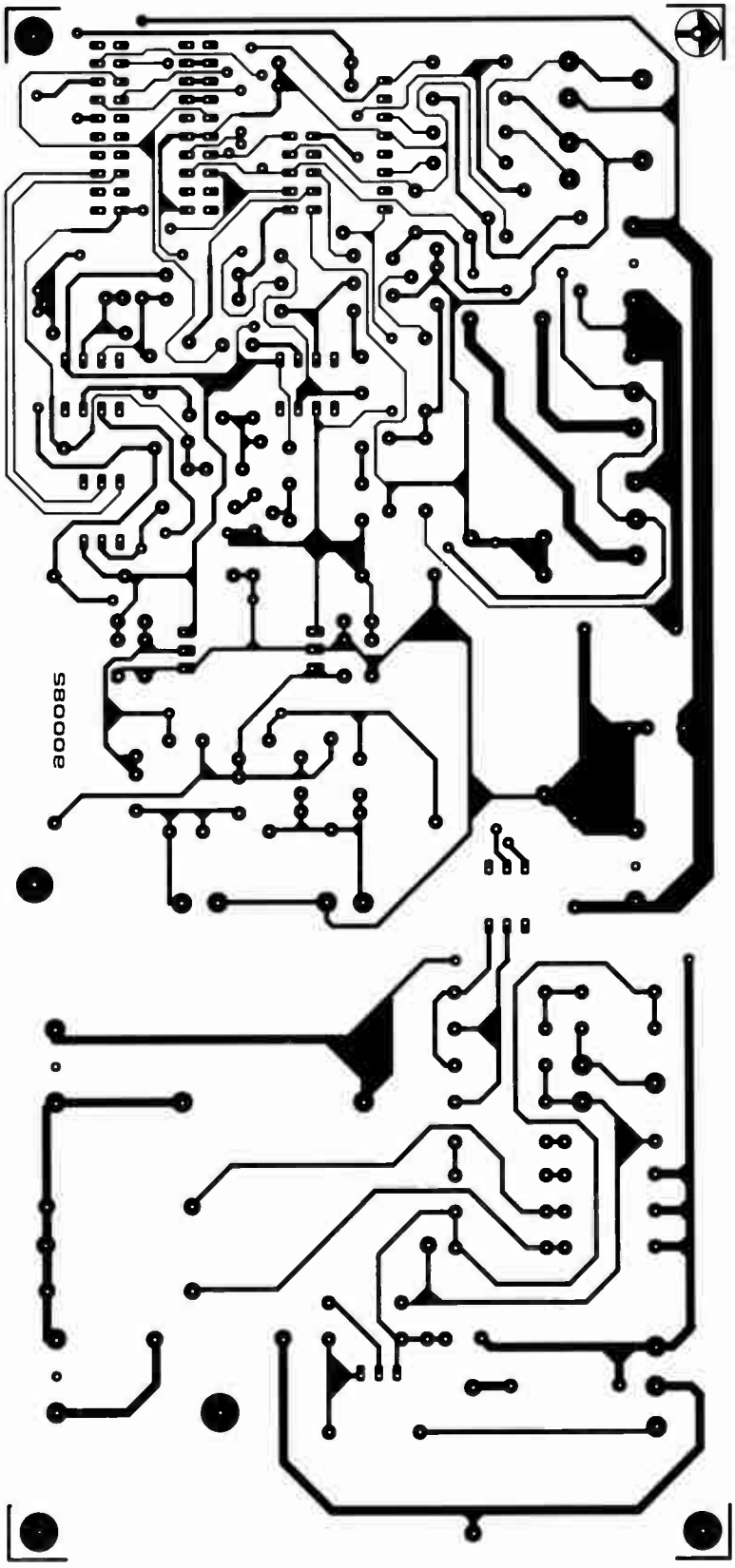

WorldRadioHistory

Fig 11a. Track lay-out (mirror image) of the printed-circuit board for the PSU.

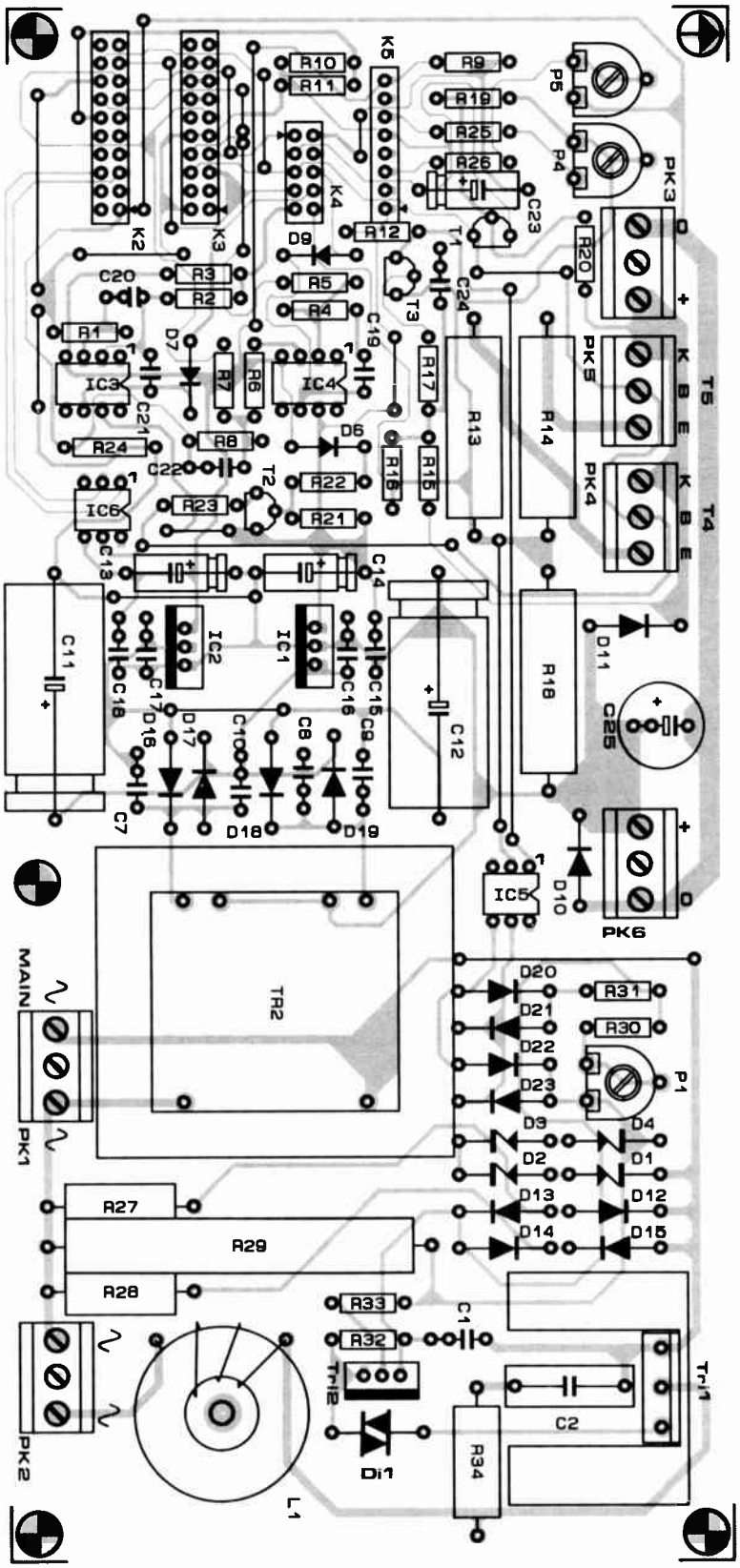

Fig. 11b. Component mounting plan.

WorldRadioHistory

1	toroid transformer 2×22V @5.11 A (ILP 61015 for 220V mains, or ILP 63015 for 240V mains)	Tr1
1	PCB-mount transformer 2×12V @10VA	Tr2
2	3½-digit digital voltmeter (Elektor 890117)	
2	20-way PCB mount box header	K2;K3
1	10-way PCB mount box header	K4
1	8-way SIL pin header	K5
6	3-way PCB terminal block	PK1–PK6
2	thermal insulation set for BDV65B	
1	thermal insulation set for TIC263D.	
1	heat-sink 1.1 K/W for T4/T5 (Fischer SK120)	
1	heat-sink 13 K/W for Tri1 (Fischer FK225)	
2	8-way DIL IC sockets	
1	heavy-duty wander socket (red)	
1	heavy-duty wander socket (black)	
1	printed-circuit board	900082

One required of the following parts:

1	6-pole toggle push-button	S1
1	self-adhesive front panel foil	900082-F
4	20-way IDC socket	
2	10-way IDC socket	
1	mains appliance socket with built-in fuseholder	
1	3.15A slow fuse (single supply)	
1	6.3A slow fuse (double supply)	
1	enclosure ESM ER48/13 (250-mm deep) or ET38/13 (250 or 350 mm deep).	

the enclosure. The general lay-out of the bottom plate is shown in the wiring diagram in Fig. 12 and the photograph in Fig. 14.

Cut clearances in the rear panel to enable the power transistors to be fitted to the heat-sinks. If possible use heavy-duty ceramic insulating washers and check that each transistor is electrically insulated from the heat-sink. Failing ceramic insulators, the more usual (and less expensive) combination of mica washers and a generous amount of heat-sink compound may be used. The clearance for the mains socket is located between the heat-sinks as shown in Fig. 13.

Use 1.5 mm^2 cross-sectional area (c.s.a.) wire for the mains connections, and 2.5 mm^2 c.s.a. wire for the high-current connections. To give the PSU a professional internal look, it is recommended to use solid wires of different colours because these are easily traced and bent to form rigid cable paths where necessary. Note that two wires between the three-way PCB terminals and the power transistors are crossed.

The 20-way flatcable between the Master (K2) and Slave (K3) supply is 'tapped' with an IDC connector and discrete wires that take the relevant connections to the mode switch (S2).

The PSU is housed in a 3-HU (height-units) 19-inch enclosure with a mesh cover plate. The photographs in Figs. 13 and 14 show the arrangement of the PCBs, the trans-

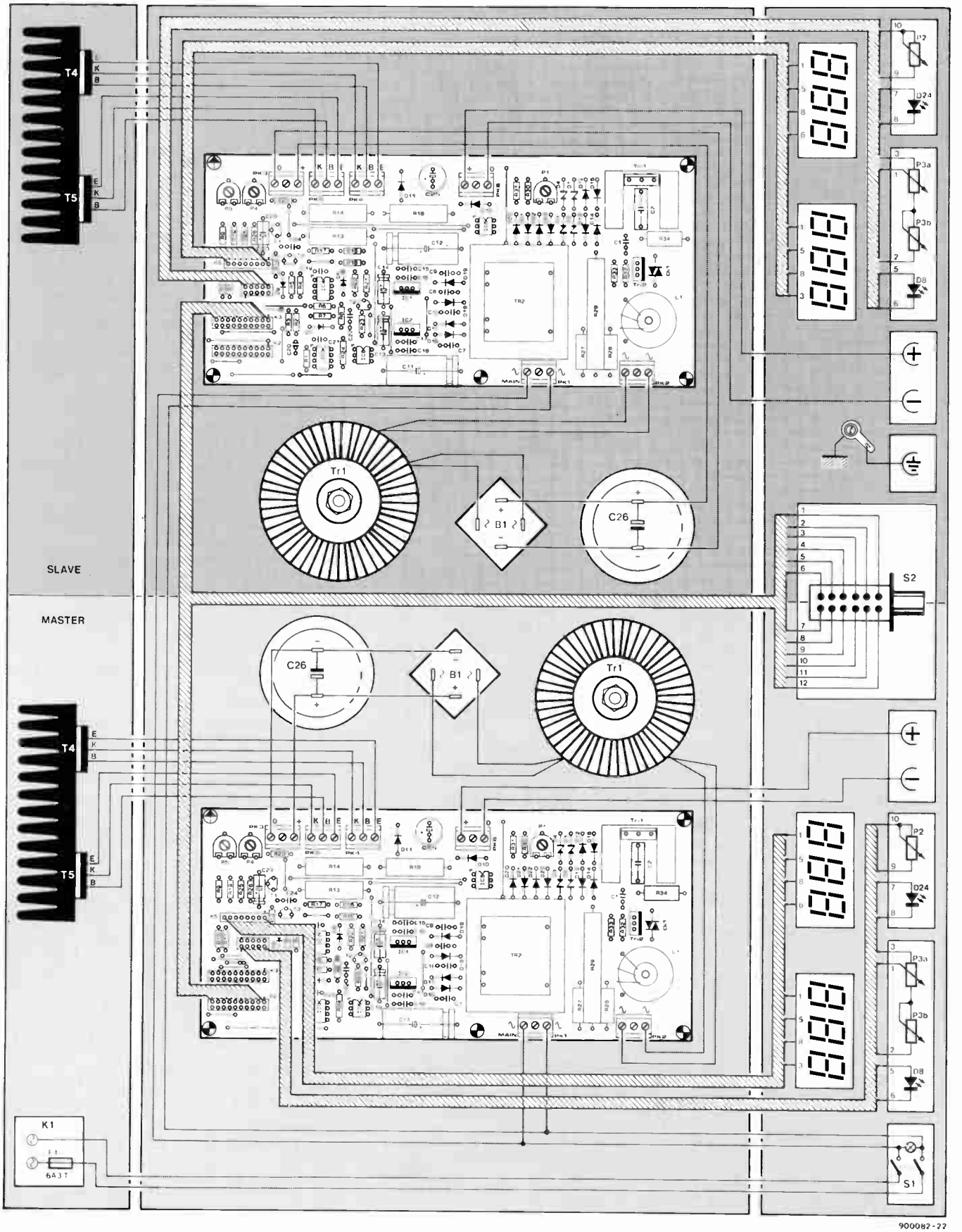

Fig. 12. Wiring diagram for the double version of the power supply. The drawing also indicates the arrangement of the various components on the bottom plate of the 19-inch enclosure.

WorldRadioHistory

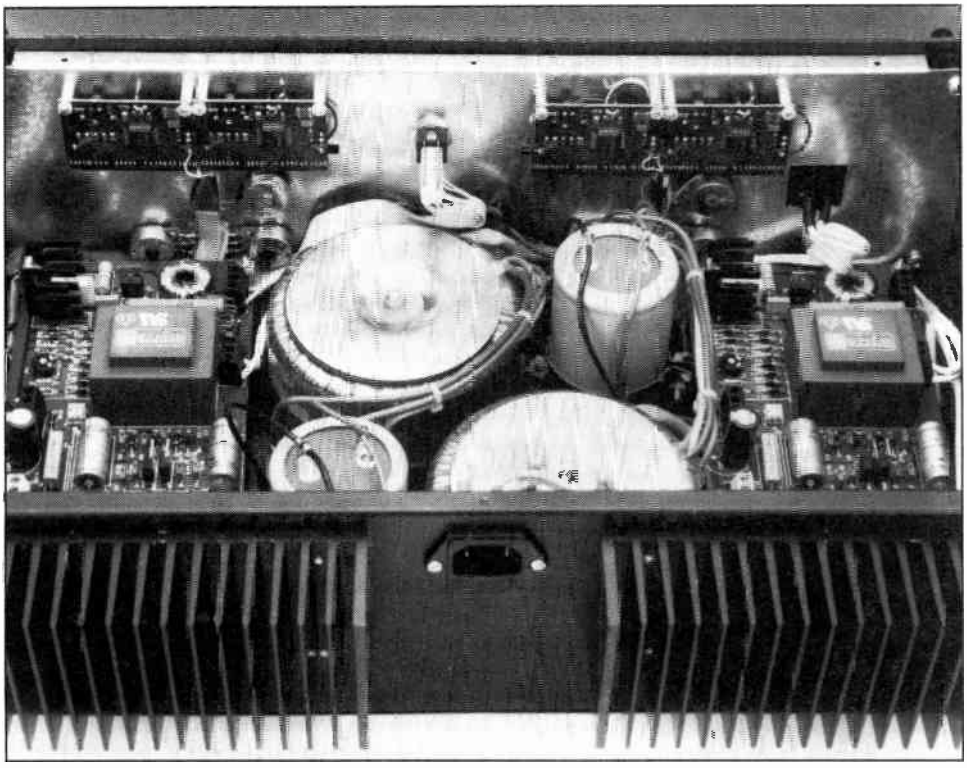

Fig. 13. Top view of the completed power supply with the cover plate removed. Note the four read-out modules mounted at the inside of the front panel.

formers, the buffer capacitors, the front-panel controls and read-outs, and the heat-sinks on the rear panel.

Voltage and current read-outs

The four read-outs can be either moving-coil meters (1 mA full-scale deflection instruments) or 3½-digit digital voltmeter modules. The modules used in the prototype are of the type described in Ref. 1. These circuits are fitted with fixed voltage regulators, which are powered by the supply (i.e., the Master or the Slave) they belong with. This supply configuration is shown in Fig. 6a in Ref. 1. The half-digit is not used here. The meter modules are connected as shown in the circuit diagram of the power supply. Note, however, that each of the current meters, M2, must be shunted by an additional 47-Ω resistor, Rs, so that network Rs-R25-P4 passes a current between 0.9 mA and 1.5 mA, which produces a drop of 35 mV to 65 mV on Rs. The preset, P4, is adjusted for a drop of 50 mV across Rs at an output current of 5 A. The read-out should then indicate 5.00. Both voltage read-outs in the PSU are also fitted with a 47-Ω shunt resistor.

The voltage and current indication modules are fitted on to the front panel of the 19-inch enclosure, together with their input voltage regulators and decoupling capacitors. When the read-outs are connected to the supply circuits via flatcables, each of their ground terminals must be connected to the supply ground via a separate, relatively thick, wire. This wire, which serves to prevent noise, is best fitted between the display board and the negative terminal of electrolytic capacitor C12.

Alignment

Start by setting all potentiometers and presets to the centre of their travel. Connect a load to the output. The electronic load described in Ref. 2 is just the thing for this purpose. Set the current and voltage controls to nought, and null the read-outs. Next, hook up a DMM, set the output voltage to 40 V and adjust P5 for a corresponding indication. Reduce the output voltage to 1 V, and load the supply with a 0.18-Ω/5 W resistor, connected via the DMM set to current measurement. Carefully adjust the voltage until the DMM reads 5 A. Next, adjust P4 for a corresponding reading on the current display.

Finally, measure the voltage drop across the series transistors: this should be about 10 V. Set an output voltage of 3 V, and set the output current to maximum (P2). Short-circuit the output terminals, and check the current. If this is about 5 A, the PSU is fully functional and ready to be taken into use. ■

References:
1. "3½-digit SMD voltmeter". *Elektor Electronics* November 1989.
2. "Electronic load". *Elektor Electronics* June 1990.

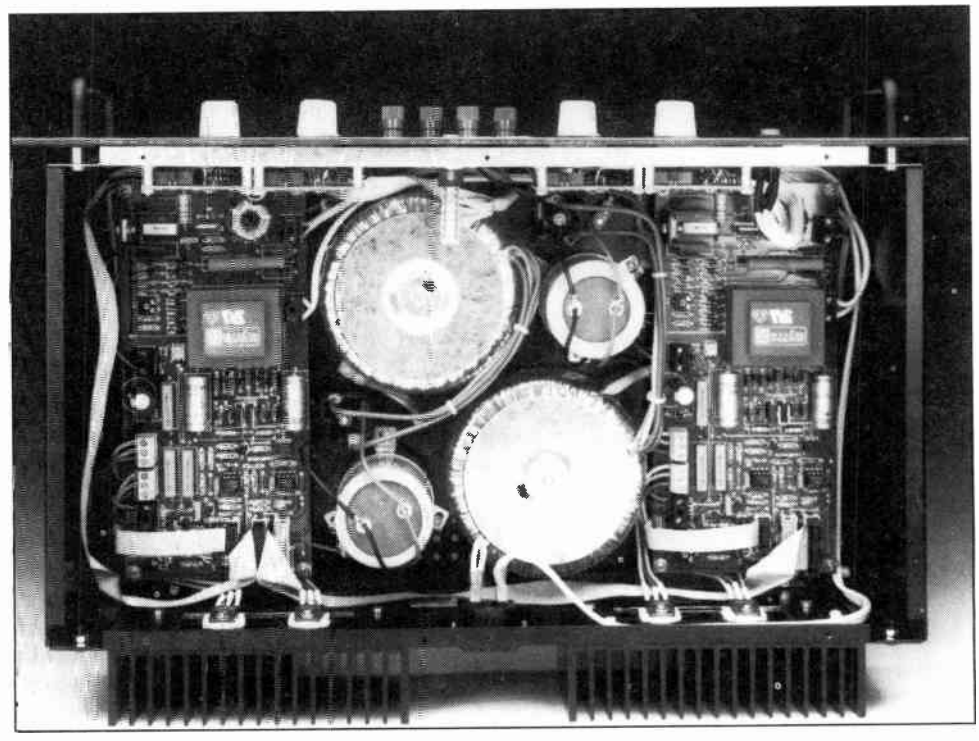

Fig. 14. Inside view of the PSU showing the wiring and the component arrangement on the bottom plate of the 19-inch enclosure.

DUBBING MIXER EV7000

PART 2: CIRCUIT DESCRIPTION (CONTINUED) AND CONSTRUCTION

WITH reference to the circuit diagram, Fig. 2 in Part 1 of this article, the microphone signals are applied to the circuit either via BU1 or BU7 and fed to the non-inverting (+) input, pin 3, of IC1A. Capacitor C2 suppresses noise, while potential divider R2-R3-R4 sets the bias voltage via R5. Capacitor C3 acts as a buffer.

The d.c. voltage gain is determined by the ratio (R6+R7+R8)/R6 and lies in the range of 20 dB to 40 dB. Like C2, C6 is included to suppress noise. The other capacitor in the amplifier, C4, decouples the direct voltage. When toggle switch S1 is open, the lower cut-off frequency is set to about 200 Hz to achieve rumble and floor noise suppression. When the switch is closed, the frequency range starts at about 20 Hz.

The output of IC1A, pin 1, drives inverting amplifier IC1B via R9. Opamp IC1B provides a gain of about 30 dB, and its output, pin 7, supplies a sufficiently strong speech signal for further processing in IC2. Preset P8 allows the gain of the first stage, IC1A, to be set to match the microphone signal level.

The next major part of the circuit takes care of the control of the fading mixer. The non-inverting (+) input, pin 3, of opamp IC5A is provided with an adjustable trigger signal via R3. The trigger level defines the point at which the microphone signal is loud enough to start a fade-in operation. The inverting (–) input of the opamp, pin 2, receives its signal from the output of IC1B, pin 7, or PCB terminal E. The amplified microphone signal is available there. When the microphone signal reaches the trigger level, the output voltage of IC5A changes from high to low. This causes capacitor C46 to be rapidly discharged via diode D2. Set to the position shown in the circuit diagram, switch S2 feeds the control voltage supplied by preset R43 to the non-inverting (+) input of IC5C. The control voltage is compared with the voltage across C46. While the capacitor discharges, the output of IC5C changes from low to high (approx. 9 V). Consequently, the volume control, R11, is fed via potential divider R46-R47, so that the microphone channel is enabled.

At this point, we revert briefly to the setting of the DELAY potentiometer, R43. The further its wiper is turned towards R42, i.e., clockwise, the longer it takes before the voltage across C46 exceeds that set with R43. This charging time forms the delay used to disable the microphone signal, following the end of the announcement. The other two positions of S2 allow the microphone signal to be passed or blocked continuously, i.e., the level-controlled fader works only in the switch position shown in the circuit diagram.

LED D4 lights when the microphone is enabled. It is driven by the output of IC5C, pin 7, via emitter follower T1 and series resistor R50.

As described, IC5C is a digital switch, i.e., its output is either high (microphone signal enabled), or low (microphone signal disabled). In the latter condition, capacitors C47A-C47B are charged via resistor R48 and diode D5. This type of circuit configuration is called a Miller integrator. The output voltage at pin 8 rises linearly to the maximum level allowed by the limiting circuit in IC5D. Potential divider R51-R52 feeds the volume control, R25, and enables the linearly rising voltage to provide a slow, smooth, fading-in of the music signal.

When the output of IC5C, pin 7, goes high, capacitors C47A-C47B are charged via R49 and D6. Consequently, the output voltage of IC5D drops, so that the music signal is faded out. One charge path of C47A-C47B is always blocked by one of the two diodes, D5 or D6. Two anti-series connected electrolytic capacitors are used here to handle the full voltage swing in both directions.

The intensity with which LED D7 lights indicates the progress of the fade-in and fade-out operations on the music channel.

Opamp IC5B compares the microphone signal at the output of IC1B, pin 7, with a reference level at PCB terminal A. As soon as excessive signal levels are detected, the 'peak Mic' LED lights.

Comparators IC7A to IC7D operate in a similar manner. The output voltage of the left channel is fed to the non-inverting inputs, pins 3 and 5, of comparators IC7A and IC7B, via R37 (PCB terminal F). The other input of each comparator is held at a reference level set up with potential divider R54-R55-R56. The values of these resistors enable IC7B to toggle when the signal level is still 30 dB below the maximum output voltage. This means that the 'OK' LED lights almost continuously to signal that a sufficiently high signal level exists to guarantee the best possible signal-to-noise ratio. The 'peak' LED, however, should preferably remain off. When it lights, the input signal level is approaching the absolute maximum. The circuit around IC7C and IC7D is identical to that around IC7A and IC7B. Its input voltage, however, is provided by the right-hand channel via R22. The use of two pairs of level indicators allows each channel to be monitored separately to avoid distortion at all times.

The circuit is powered by a 12-V, 300 mA mains adapter, connected to a 3.5-mm jack socket, BU6, on the rear panel of the enclosure. Diode D1 provides voltage reversal protection, while capacitors C43, C44 and C45 form buffers and prevent oscillation. A 10-V regulator is used in position IC6.

Construction

The dubbing mixer is built on two printed-circuit boards. These accommodate all active and passive components, including the potentiometers and the sockets. The two toggle switches are the only external components.

The printed-circuit boards are populated as shown by the component overlays and the parts list. It is best to start with the low-profile parts. Fit solder terminals ST1 to ST5 for the connection of the toggle switches.

Bend the terminals of the seven LEDs at right angles at a distance of about 5 mm from the body. Fit LEDs D8 and D10 at a height of about 5 mm above the board. Fit D3, D4 and

WorldRadioHistory

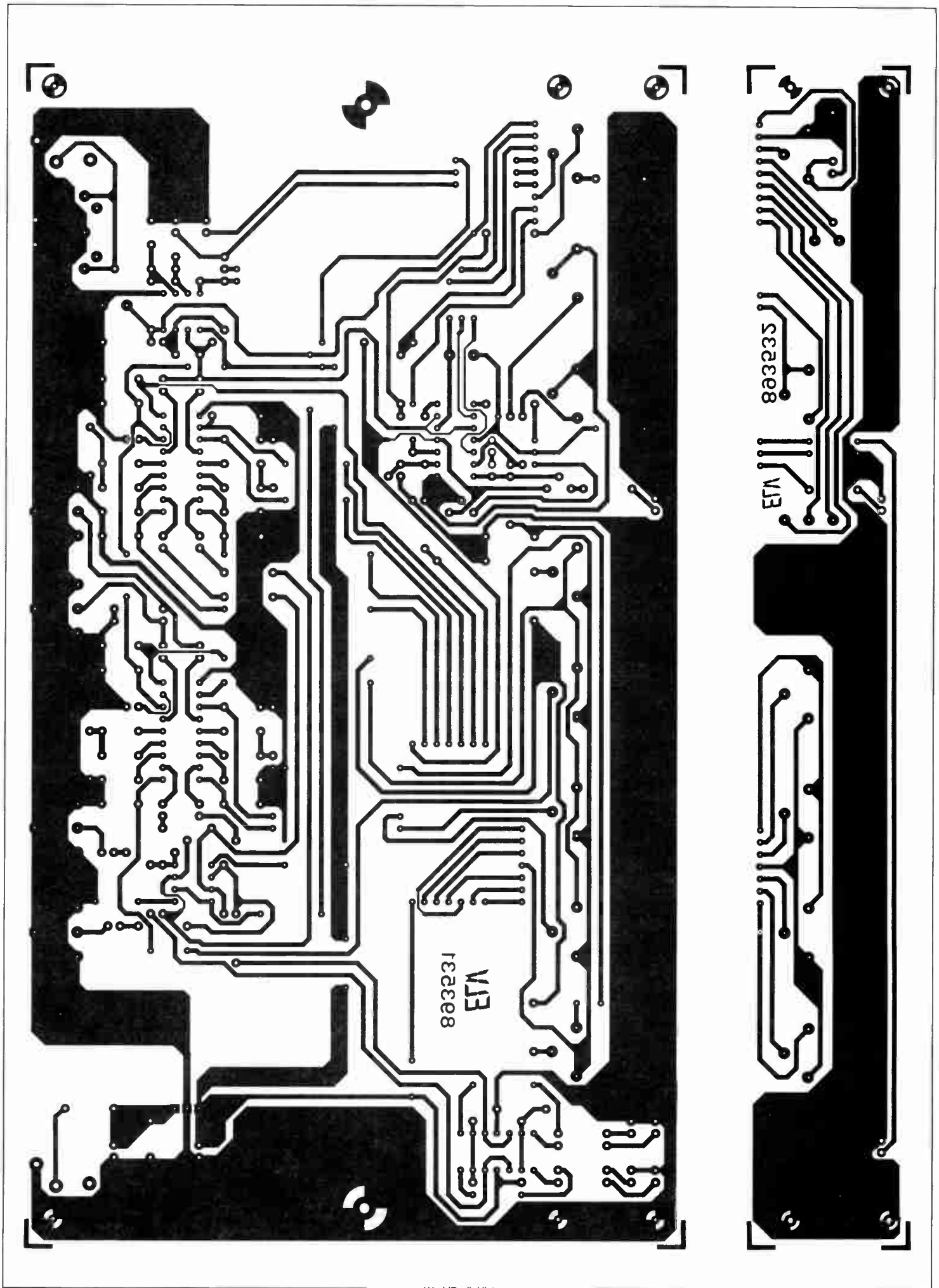

Fig. 3a. Track layouts (mirror images) of the motherboard (left) and the potentiometer board (right).

WorldRadioHistory

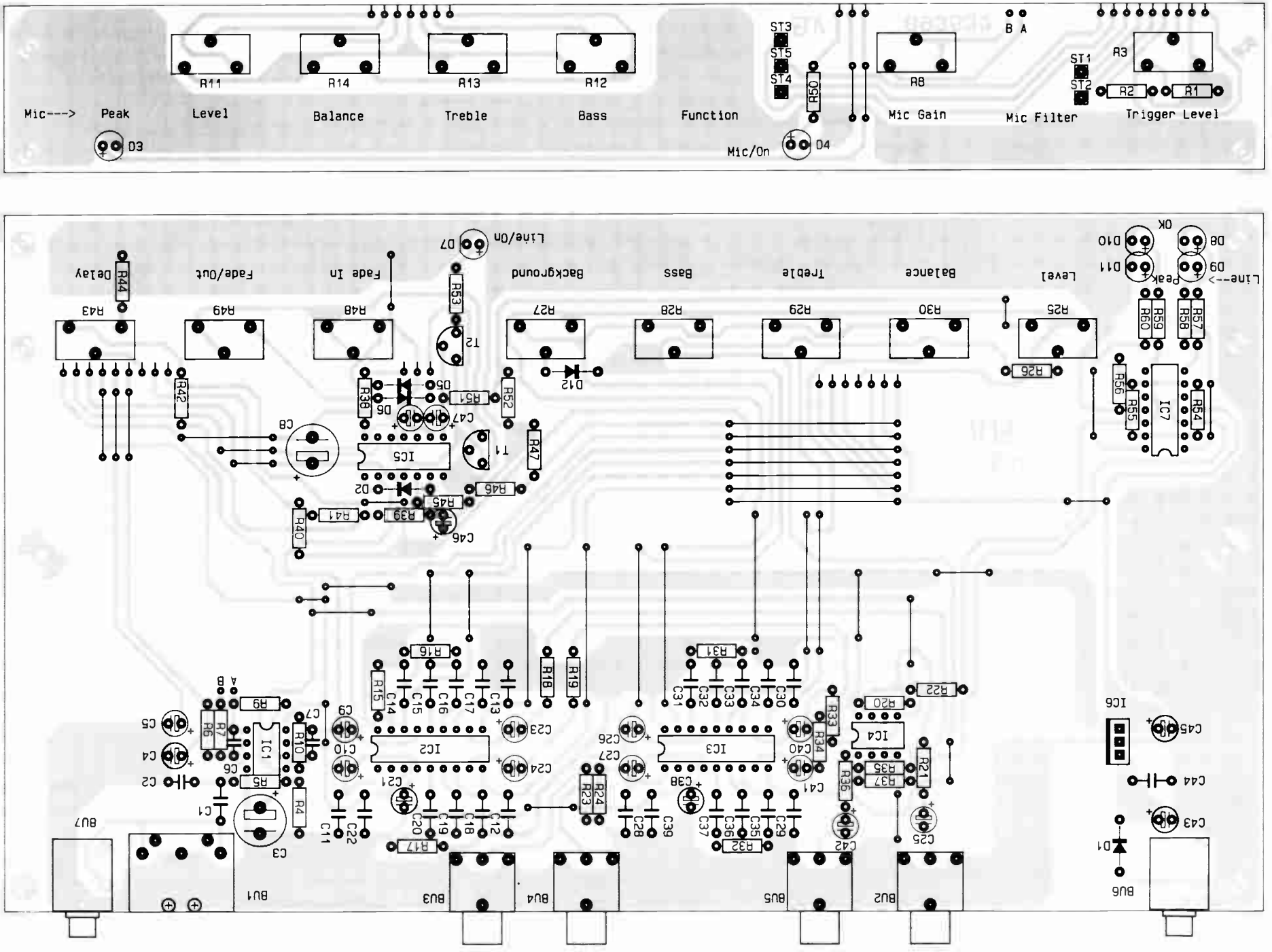

Fig. 3b. Component mounting plan for the motherboard (left) and the potentiometer board (right).

WorldRadioHistory

COMPONENTS LIST

content of kit supplied by ELV

Resistors:

2	100Ω	R21;R36
1	470Ω	R42
9	1kΩ	R6;R9;R38;R50; R53;R57–R60
1	1kΩ2	R1
3	2kΩ2	R2;R15;R44
1	3kΩ3	R4
1	3kΩ9	R40
1	8kΩ2	R41
17	10kΩ	R7;R16–R20; R22;R26; R31–R35;R37; R46;R47;R51;R52
1	18kΩ	R55
1	27kΩ	R54
1	33kΩ	R10
1	47kΩ	R56
1	56kΩ	R5
2	100kΩ	R23;R24
1	470kΩ	R39
1	1MΩ	R45
1	2kΩ2 preset H	R27
2	10kΩ preset V	R3;R43
8	47kΩ preset V	R11–R14;R25; R28–R30
1	100kΩ preset H	R8
2	250kΩ preset V	R48;R49

Capacitors:

1	22pF	C6
2	100pF	C2;C7
4	15nF	C17;C18;C34;C35
1	47nF	C44
8	56nF	C15;C16;C19; C20;C32;C33; C36;C37
8	100nF	C11–C14;C28–C31
2	220nF	C22;C39
1	330nF	C1
1	1µF 16V	C4
4	2µF2 16V	C9;C10;C26;C27
4	4µF7 16V	C23;C24;C40;C41
7	10µF 16V	C5;C8;C25;C42; C43;C45;C46
2	22µF 16V	C47a;C47b
3	100µF 16V	C3;C21;C38

Semiconductors:

2	TDA1524	IC2;IC3
2	TL082	IC1;IC4
2	LM324	IC5;IC7
1	7810	IC6
2	BC548	T1;T2
1	1N4001	D1
4	1N4148	D2;D5;D6;D12
7	LED, red, 3-mm	D3;D4;D7–D11

Miscellaneous:

2	3.5-mm jack socket for PCB mounting	BU6;BU7
1	5-way DIN socket for PCB mounting	BU1
4	phono socket for PCB mounting	BU2–BU5
2	miniature SPDT switch	
5	solder pin	
8	PCB spacer 15-mm	
6	PCB spacer 5-mm	
4	M3×50 screw	
2	M3×10 screw	
16	M3 nut	
1	motherboard	
1	potentiometer board	
1	ABS enclosure	

screened wire, approx. 10 cm
silver-plated wire, approx. 210 cm

A complete kit of parts for the dubbing mixer is available from the designers' exclusive worldwide distributors:

ELV France
B.P. 40
F-57480 Sierck-les-Bains
FRANCE

Telephone: +33 82837213
Facsimile: +33 82838180

D7 at a height of about 9 mm above the board, and D9 and D10 at a height of about 15 mm above the board. The distance is measured from the centre of the diode body.

The connection between the motherboard and the potentiometer board is made by 19 36-mm long pieces of silver-plated wire. Insert these wires into the motherboard, and position each of them so that the wire end protrudes about 1 mm from the solder side of the motherboard. Solder the wires to the respective spots. Do not solder the free ends to the potentiometer board as yet.

Solder the end of a 100-mm long screened wire to terminals A and B on the motherboard. Connect the screening to terminal A, and the core to terminal B. The free end of this wire is later connected to the potentiometer board.

Carefully inspect the two boards for dry solder joints, short-circuits between spots, and incorrectly located components. Next, place the motherboard over the two mouldings on the bottom half of the enclosure. Mark and drill the six 3.5-mm holes for fixing the PCB. Remove the motherboard. At the rear side of the bottom cover, insert two M3×10 mm screws from the outside into the two associated holes, and secure each of them with a nut at the inside. Similarly, insert a M3×50 mm screw into each of the four holes at the front side, and secure each one with a nut at the inside. Next, place 5-mm long PCB spacers over the screws. Place the motherboard over the six screw ends. At the same time, fit the rear plate, which is secured to the PCB by the sockets. Fix the motherboard at the rear side by securing the two nuts. Each of the four 50-mm long screws is provided with two 15-mm long PCB spacers, which are secured with a M3 nut.

Align the potentiometer board over the 19 wire ends at the front side of the motherboard. Use M3 nuts to secure the potentiometer board on the four screw ends. Next, carefully solder the 19 wire ends to the spots at the track side of the potentiometer board.

Put the front panel in place, and check the positions of the seven LEDs. Remove the knurled nuts from the shafts of the two switches, and turn the hexagonal nuts until they are at about half-way the shafts. Insert each shaft from the inside into the respective hole in the front panel, and secure the switch with the knurled nut. If necessary adjust the position of the hexagonal nut, so that the shaft does not protrude too far from the front panel.

Use short pieces of silver-plated wire to connect the lower terminal of the left-hand toggle switch (next to LED D4) to ST4, the centre connection to ST5, and the top connection to ST3. Similarly, connect the centre terminal of the right-hand toggle switch to terminal ST4, and the lower terminal to ST2.

Finally, insert the 14 spindles into the presets, and mount the associated knobs. The ends of the spindles are gently pushed into the holes in the preset until they lock. After assembling the top and cover plates of the enclosure, the dubbing mixer is ready for use. Alignment is not required! ■

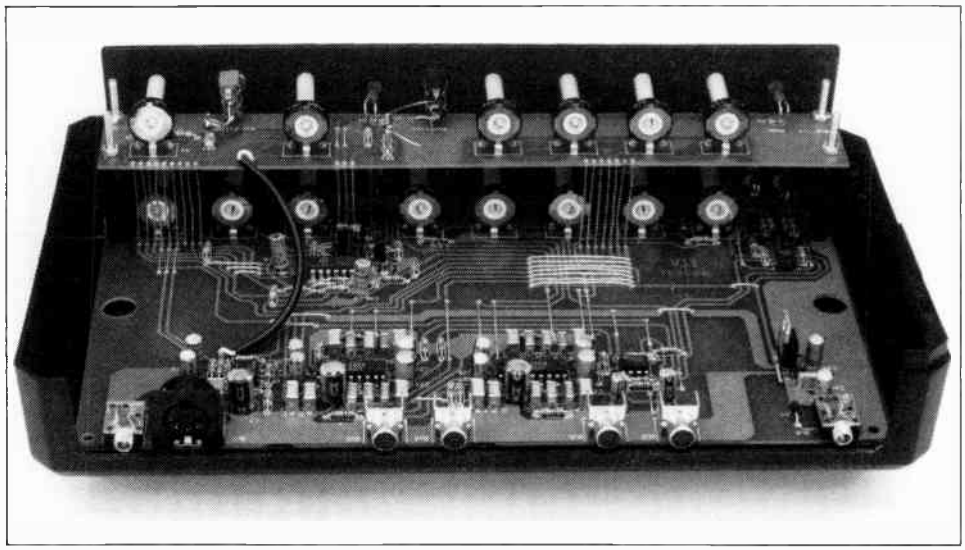

Fig. 4. Inside view of the dubbing mixer with the rear panel removed. Note the vertical wires between the motherboard and the potentiometer board.

WorldRadioHistory

S-VHS/CVBS-TO-RGB CONVERTER

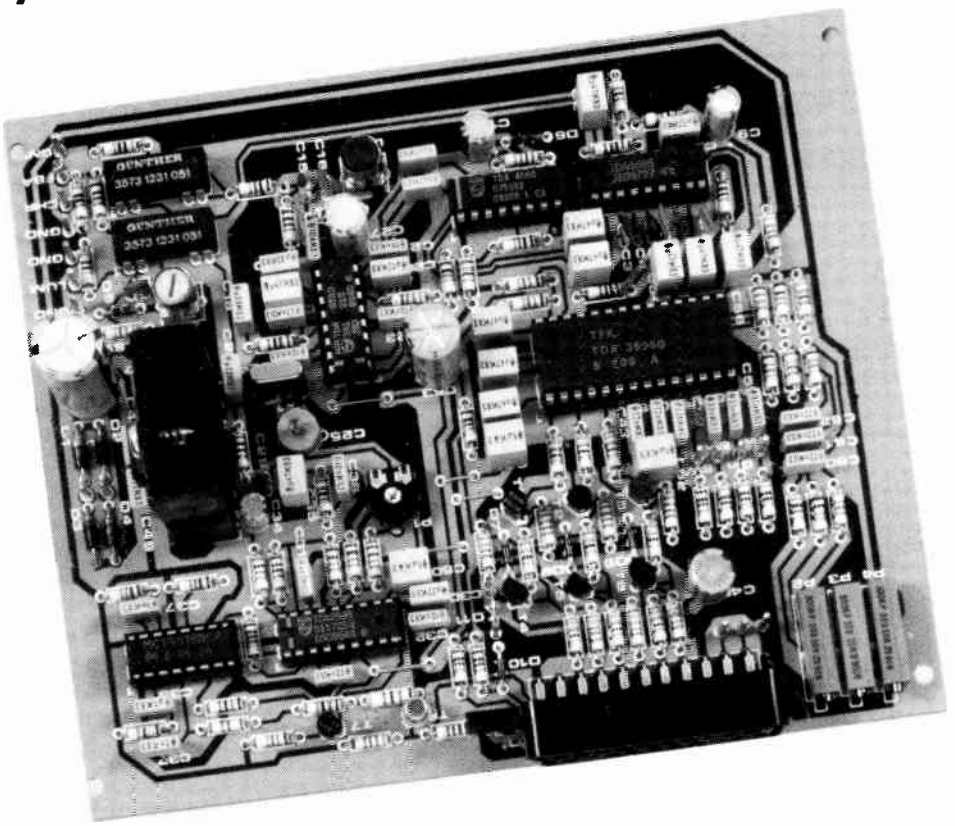

PART 2: CIRCUIT DESCRIPTION AND CONSTRUCTION

Following last month's introduction into the main characteristics of the Super-VHS system, we close off the article with details of a practical converter circuit that allows an S-VHS VCR or camcorder to be connected to the RGB inputs of a colour TV or monitor. The circuit presented here forms a state-of-the-art approach to all-analogue picture standard conversion, and is based on the latest in IC technology available for this purpose.

H. Reelsen

It seems odd that the introduction of S-VHS camcorders and video cassette recorders (VCRs) last year has not been followed by more TV sets with separate chrominance and luminance inputs. After all, these recorders need a suitable display to match their advanced features. True, some buyers will opt for the fairly expensive TV receivers that have separate colour processing facilities, but many others are either not prepared to pay the current high price for such a set or net yet willing to replace their existing set. What can they do unil they have acquired a suitable new set?

The circuit presented here converts the separate colour signals supplied by an S-VHS source into the three basic colour signals, red, green and blue (RGB), which may be applied to the respective inputs of a TV set fitted with a SCART socket or separate RGB sockets. The performance of the integrated circuits used in the converter is so good that it is also worthwhile to have them convert CVBS (composite video) into RGB. A separate input is provided for this application, which also allows some types of RGB computer monitor to be used as a video display.

Circuit description

As shown in the circuit diagram, Fig. 4, the converter has three video signal inputs:

- CVBS (chrominance-video-blanking-synchronisation) with an input impedance of 75 Ω. This input is suitable for connecting to signal sources (VCRs, cameras, camcorders and home computers) that supply the standard CVBS signal level of about 1 V_{pp}.
- Y (luminance, or brightness) with an impedance and sensitivity of 75 Ω and 1 V_{pp} respectively. The Y signal is processed without a colour trap at a bandwidth of up to 7 MHz.
- U/V (chrominance, or colour information) with an input impedance and sensitivity of 75 Ω and 0.5 V_{pp} respectively. This input feeds the colour signal to the PAL decoder in the circuit.

Luminance processing

The function of the separate Y, U and V signals that together make up a colour video sig-

WorldRadioHistory

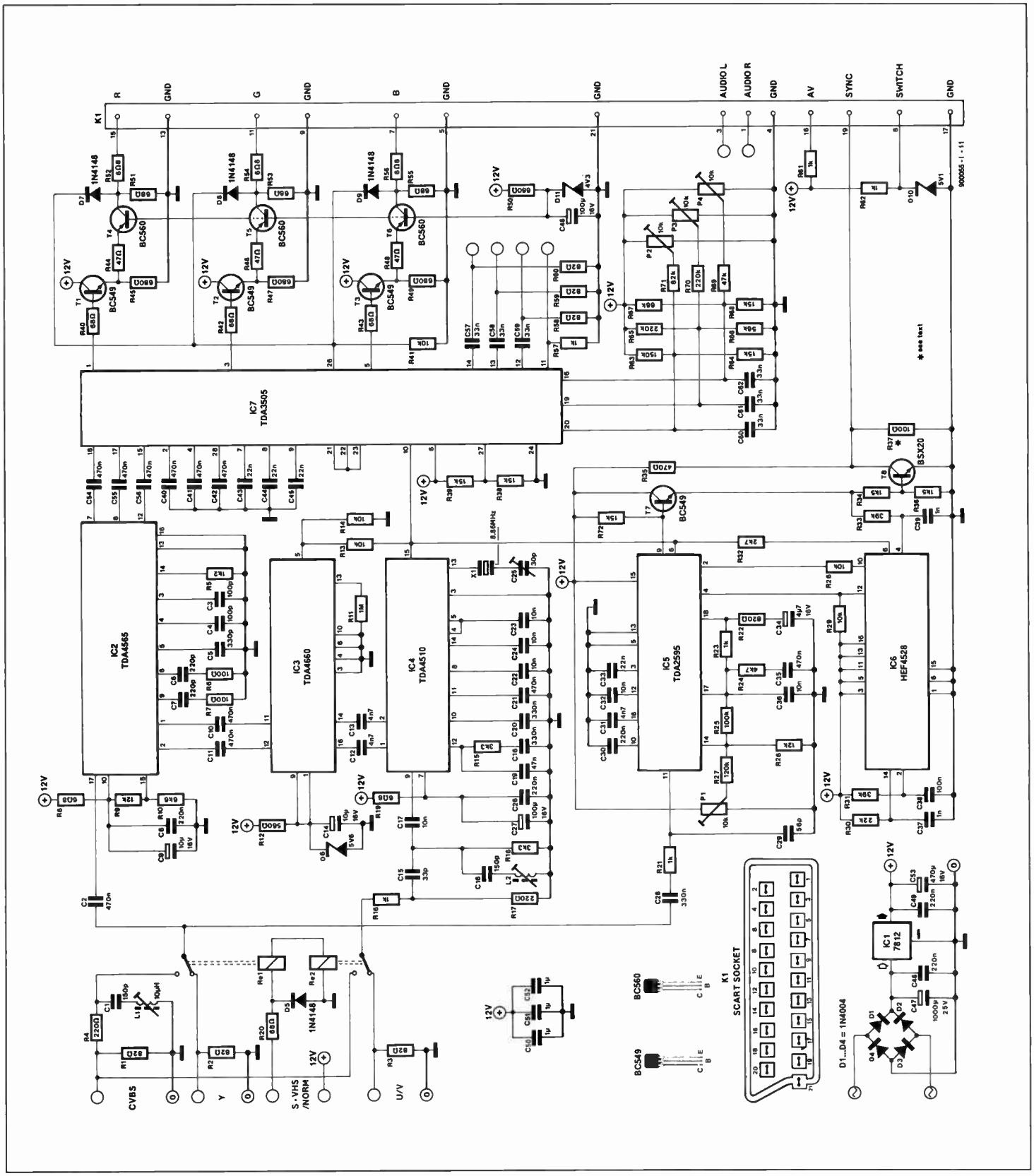

Fig. 4. Circuit diagram of the video standards converter. The unit is connected to the TV set or monitor via SCART socket K1.

nal is discussed in Part 1 of this article. The Y and U/V inputs are used with S-VHS equipment. The CVBS input may be connected to equipment that supplies a composite video signal. Two relays, Re_1 and Re_2, are used to switch between S-VHS and CVBS operation. The converter is switched to CVBS operation by applying +12 V to the S-VHS/NORM control input. S-VHS operation is selected by leaving the input open-circuited.

Relay Re_1 then feeds the Y (luminance) signal to IC_2 via coupling capacitor C_2. As shown in the block diagram in Fig. 5, the TDA4565 contains a colour transient improvement (CTI) circuit and a delay line for the Y signal. This delay line is an essential part in any colour TV set because the luminance signal has a much greater bandwidth than the chrominance signal and hence requires a delay of about 800 ns. A number of gyrators in the TDA4565 allow delay times between 690 ns and 960 ns to be set in steps of 90 ns with the aid of a control voltage applied to pin 15. In the present circuit, the delay is set to 780 ns by potential divider R_9-R_{10}. Coupling capacitor C_{56} feeds the delayed Y signal supplied by pin 12 of the TDA4565 to pin 15 of the colour matrix circuit, a TDA3505 (IC_7). The delayed Y signal has an amplitude of about 0.5 V_{pp}.

WorldRadioHistory

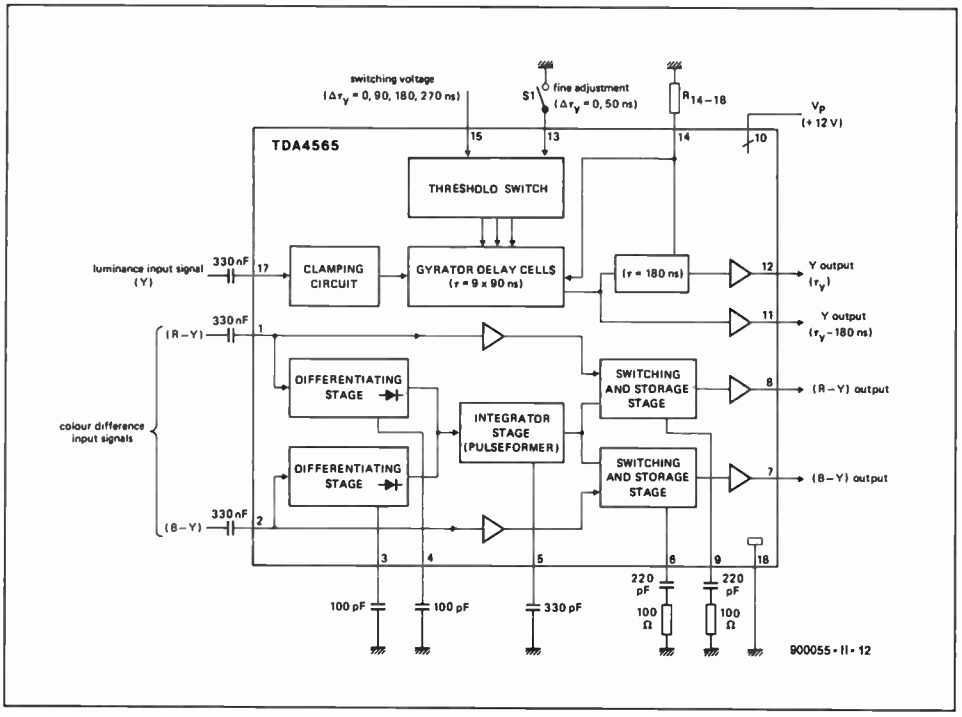

Fig. 5. Block diagram of the TDA4565 Colour Transient Improvement (CTI) circuit.

Chrominance processing

The chrominance signals are passed to the decoder via the contact of Re2. Before they arrive at the PAL decoder, a TDA4510 (IC4), the U/V signals are attenuated by R16-R17, and taken through a high-pass filter composed of C15-C16-L2.

The TDA4510 was originally designed for use with a glass delay line which serves to store the chrominance signal of the previous picture line. In the present circuit, the TDA4510 works without this crucial part whose delay time of one picture line enables the colour correction operation in the PAL TV system to correlate the colour information in two successive picture lines. In a PAL TV receiver, the R–Y and B–Y components modulated on the 4.43 MHz colour subcarrier are delayed and subsequently added to the undelayed signals. Since this addition is critical in respect of phase and amplitude, a preset and a small inductor are fitted to optimize the adjustment which, unfortunately, requires a calibrated PAL signal source.

The recently introduced TDA4660 provides a welcome alternative to the glass delay line and at the same time eliminates the associated complex phase and amplitude adjustments. The baseband delay element in the TDA4660 may be used by configuring the PAL decoder as shown in the circuit diagram. The demodulated colour difference signals at output pins 1 and 2 of IC4 are applied to the respective inputs of the CCD-based analogue shift register in the TDA4660 (see the block diagram in Fig. 6). After the shift operation, the delayed signal and the undelayed signal are added in the IC to give the conventional R–Y and B–Y components. The clock for the CCD register is provided by a PLL (phase-locked loop) circuit contained in the TDA4660. The reference clock of the PLL is formed by the line frequency, obtained from the super-sandcastle pulse applied to the chip via R13-R14. The origin and the function of the super-sandcastle pulse is discussed further on in this article.

CTI function

The colour difference signals, R–Y and B–Y, are applied to the inputs, pins 11 and 12, of the baseband delay element, IC3. The typical signal levels are 1.0 V_{pp} at the R–Y input (pin 11) and 1.3 V_{pp} at the B–Y input (pin 12). An oscilloscope connected to these IC pins will reveal sluggish rise and fall times of the colour difference signals as a result of, say, the standard colour bar test chart. This is caused mainly by the limited bandwidth (about 1 MHz) of the chrominance signal. The bandwidth is reduced even further (to about 0.5 MHz or smaller) when a normal VHS tape is played back. Obviously, this makes the signal edges even slower and results in degraded colour transient definition, or, in other words, a picture that is not very sharp. In not a few cases, the picture quality from a VCR is degraded further by moiré effects in the already blurred colour transients. As already explained in Part 1, this moiré is caused mainly by insufficient suppression of the colour subcarrier sidebands.

Fortunately, the picture quality can be improved considerably by a colour transient improvement (CTI) chip. Here, the TDA4565 (IC2) is used in a standard application circuit. The way in which CTI is implemented without introducing overshoot and additional noise is discussed below.

The TDA4565 detects a colour transient by differentiating the colour difference signals. This is achieved by an internal difference amplifier and capacitors C3 and C4. When a transient is detected, an internal pulse shaper, which uses C5 as an external part, is actuated. The pulse shaper in turn causes the input signal to be stored in a sample-and-hold circuit which retains the current signal level until the transient is over. Next, 100 ns pass before the new level is supplied. The sample-and-hold function is implemented by external components R6, R7, C6 and C7. The re-shaped colour difference signals at output pins 7 and 8 of the TDA4565 are fed to the matrix circuit via a pair of coupling capacitors, C54 and C55.

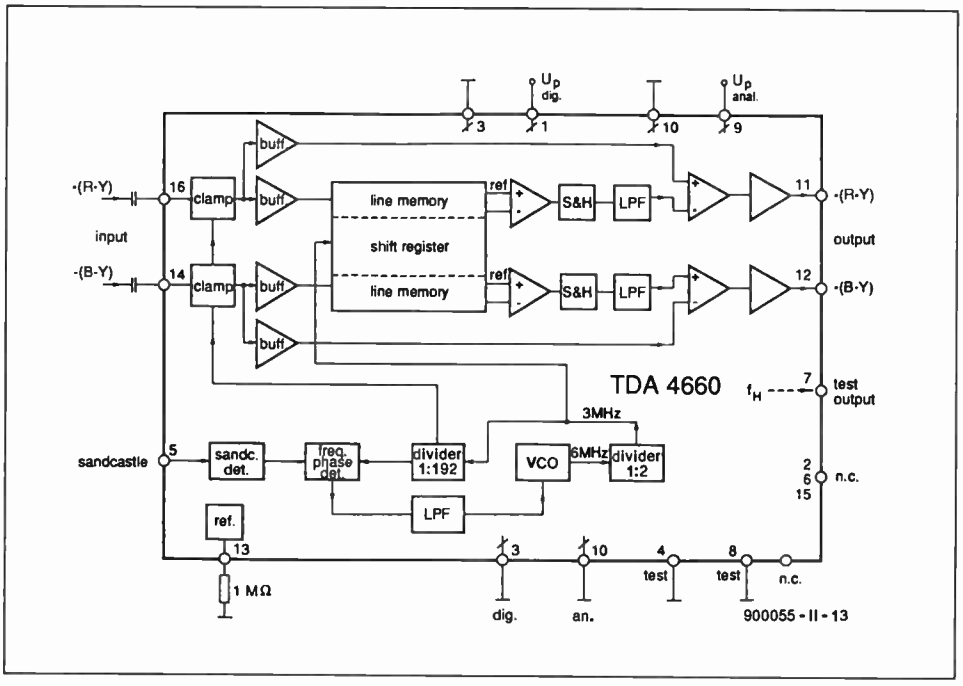

Fig. 6. Block diagram of the TDA4660 CCD-based baseband delay element with PLL-controlled line frequency generator.

WorldRadioHistory

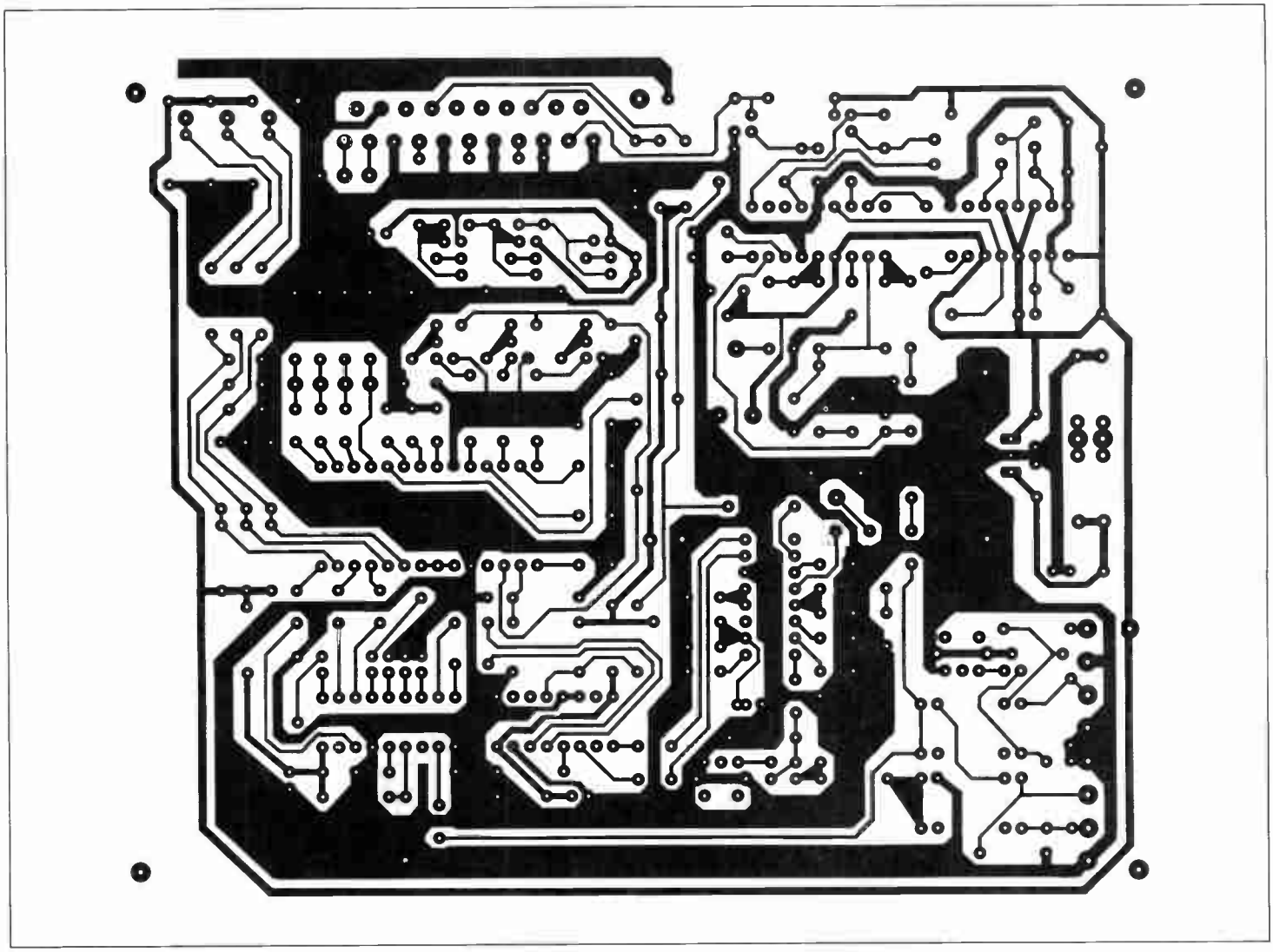

Fig. 7a. Track layout (mirror image) of the printed-circuit board for the video converter.

RGB output circuit

The colour matrix circuit is based on another video IC from Philips Components: the TDA3505 (IC7). In this, the luminance and chrominance signals meet (in S-VHS mode) or meet again (in CVBS mode). The basic colours, R, G and B, are recovered, by a summing operation, from the colour difference signals and the luminance (Y) component. The picture settings, contrast, brightness and colour saturation, are adjusted by direct voltages that determine the bias and the gain at a number of points in the matrix. Here, the relevant components are R63-R71 and presets P2, P3 and P4. The presets are used to adjust the brightness (P2), the contrast (P3) and the colour saturation (P4). The multiturn presets on the circuit board may, of course, be replaced by front-panel mounted potentiometers to give a continuous control range rather than fixed settings.

Two-stage level shifters/buffers are required at the outputs of the matrix because these do not supply levels down to 0 V, and are not capable of driving a 75-Ω load direct. The buffering and level shifting are achieved with three combinations of an emitter follower and a common-base amplifier (T1-T6). The output impedance of the three drivers is 75 Ω.

Each colour output driver has a diode which allows the operating point of the two-transistor stage to be monitored via pin 26 of the TDA3505. The operating point is monitored and, if necessary, corrected, during the vertical blanking interval, i.e., when the scanning beam in the TV set is quenched. The direct voltage required for this function is stored in capacitors C40, C41 and C42 during the current picture. The matrix circuit

COMPONENTS LIST

Resistors:

6	82Ω	R1;R2;R3;R58;R59;R60
2	220Ω	R4;R17
1	1k2	R5
3	100Ω	R6;R7;R37
5	6Ω8	R8;R19;R52;R54;R56
2	12kΩ	R9;R26
1	6k8	R10
1	1MΩ	R11
1	560Ω	R12
5	10kΩ	R13;R14;R28;R29;R41
2	3k3	R15;R18
6	1kΩ	R16;R21;R23;R57;R61;R62
7	68Ω	R20;R40;R42;R43;R51;R53;R55
1	820Ω	R22
1	4k7	R24
1	100kΩ	R25
1	120kΩ	R27
1	22kΩ	R30
2	39kΩ	R31;R33
1	2k7	R32
2	1k5	R34;R36
1	470Ω	R35
5	15kΩ	R38;R39;R64;R68;R72
3	47Ω	R44;R46;R48
4	680Ω	R45;R47;R49;R50
1	150kΩ	R63
2	220kΩ	R65;R70
1	56kΩ	R66
1	68kΩ	R67
1	47kΩ	R69
1	82kΩ	R71
1	10kΩ preset H	P1
3	10kΩ multiturn preset	P2;P3;P4

(continued →)

WorldRadioHistory

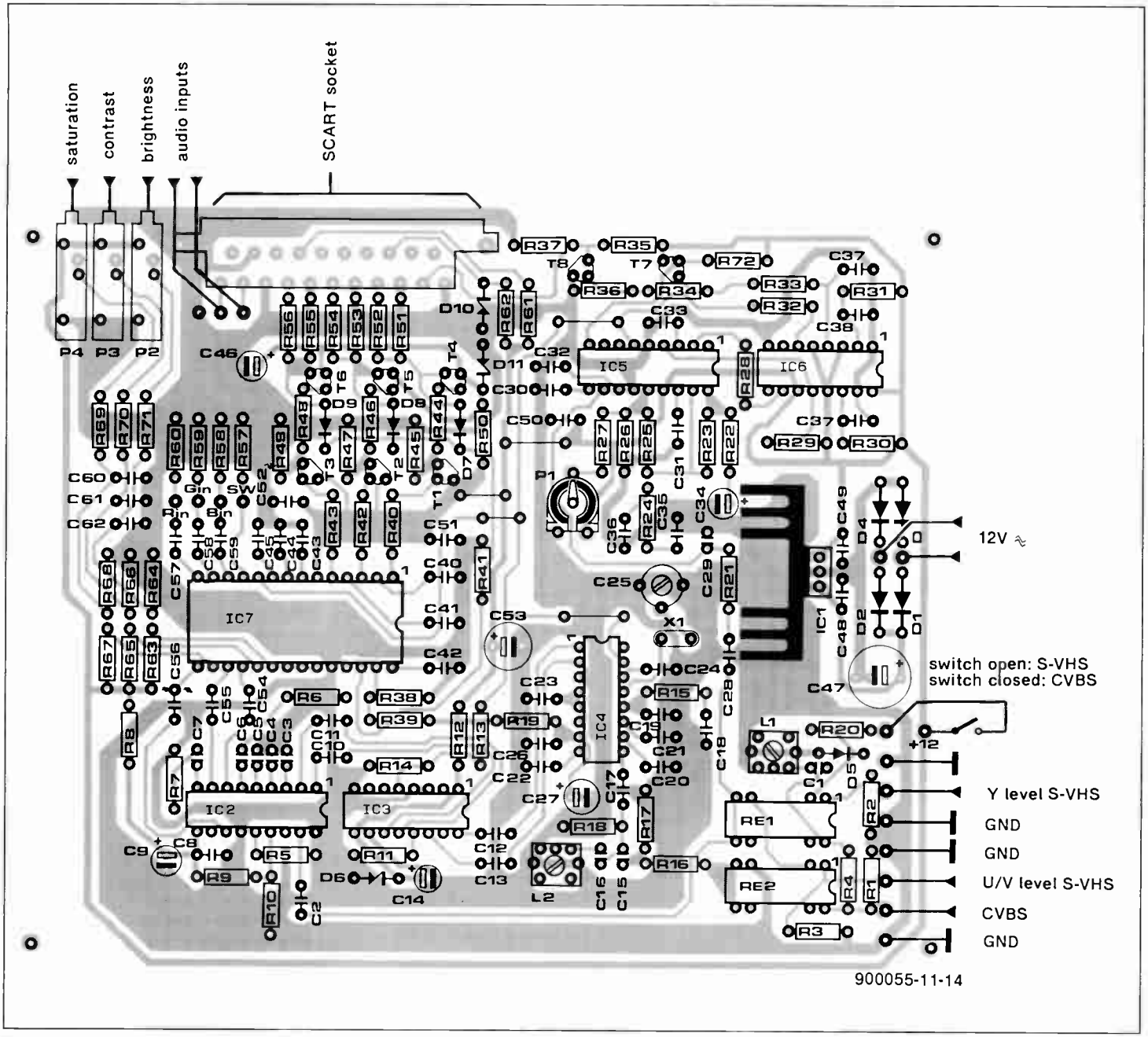

Fig. 7b. Component mounting plan of the printed-circuit board, and connections to external parts and video/audio equipment.

COMPONENTS LIST

Capacitors:

2	150pF	C1;C16
11	470nF	C2;C10;C11;C21; C35;C40;C41; C42;C54;C55;C56
2	100pF	C3;C4
1	330pF	C5
2	220pF	C6;C7
5	220nF	C8;C26;C30;C48; C49
2	10µF 16V radial	C9;C14
3	4n7	C12;C13;C31
1	33pF	C15
6	10nF	C17;C22;C23; C24;C32;C36
3	330nF	C18;C20;C28
1	47nF	C19
1	30pF trimmer	C25
2	100µF 16V radial	C27;C46
1	56pF	C29
4	22nF	C33;C43;C44;C45
1	4µ7 16V radial	C34
2	1nF	C37;C39
1	100nF	C38
1	1,000µF 25V radial	C47
3	1µF	C50;C51;C52
1	470µF 16V radial	C53
6	33nF	C57–C60

Semiconductors:

4	1N4004	D1–D4
4	1N4148	D5;D7;D8;D9
1	5V6 0.4W zener diode	D6
1	5V1 0.4W zener diode	D10
1	4V3 0.4W zener diode	D11
4	BC549B	T1;T2;T3;T7
3	BC560C	T4;T5;T6
1	BSX20	T8
1	7812	IC1
1	TDA4565	IC2
1	TDA4660	IC3
1	TDA4510	IC4
1	TDA2595	IC5
1	HEF4528	IC6
1	TDA3505	IC7

Inductors:

1	10µH adjustable; Toko 119 LN-A3753	L1
1	50µH adjustable; Toko 119 LN-A5783	L2

Miscellaneous:

2	12-V SPDT DIL reed relay	Re1;Re2
1	PCB-mount SCART socket	K1
1	quartz crystal 8.867238 MHz (HC18/U)	X1
1	heat-sink for IC1	
22	solder pins	
1	printed-circuit board	900055

WorldRadioHistory

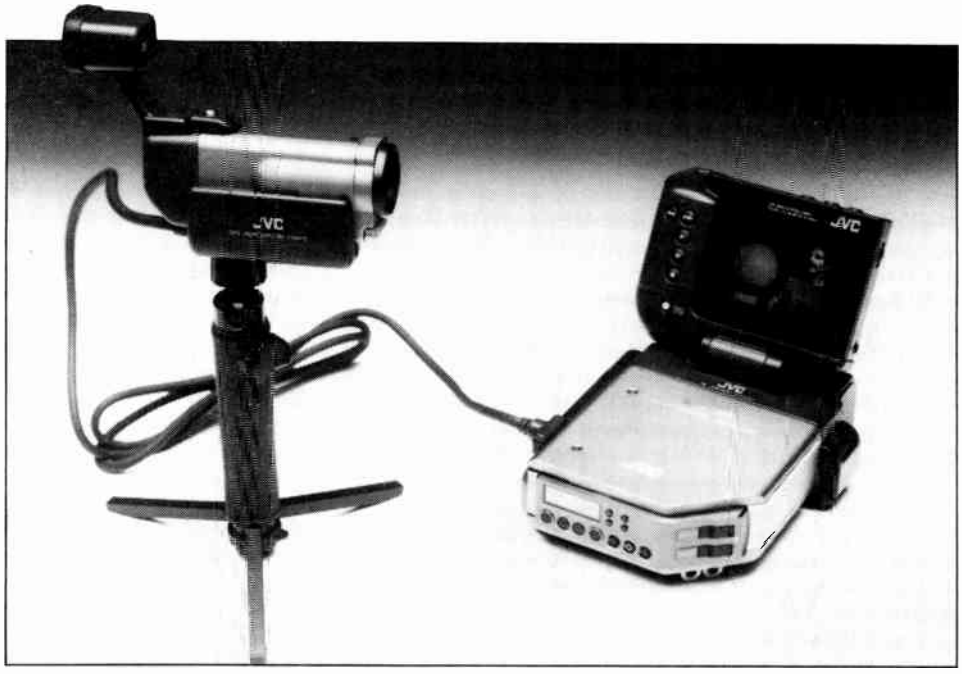

Fig. 8. S-VHS equipment is gaining rapid acceptance. Pictured to the right is JVC's Super-VHS compact recorder with built-in LCD screen. The recorder is claimed to be the world's lightest and smallest at a weight of only 530 g and a size of 131×58×118 mm. The associated Super-VHS camera with stereo sound has a size of 39×69×122 mm. The camera and the recorder are part of the SC-F007 mini-video system, kindly put at our disposal by JVC Holland.

recognizes the vertical blanking period with the aid of the super-sandcastle pulse.

The SCART socket that supplies the RGB output signals also carries the (stereo) sound signals via pins 3, 1 and 4, and the AV and SWITCH voltages (+12 V and +5 V for automatic switch-over to AV and RGB mode respectively).

CVBS mode

The operation of the circuit in CVBS (composite video) mode is much simpler than in S-VHS mode. When the S-VHS/NORM control input is connected to +12 V, both relays are actuated. Like the chrominance signal, the CVBS signal is applied direct to the colour filter, so that the PAL decoder receives the colour components, which, obviously, the Y channel must not be allowed to 'see'. The filtered composite signal is applied to IC2 after passing a colour trap composed of R4 and tuned circuit L1-C1. The CVBS (or Y) signal is 'tapped' behind Re1 and fed to the synchronization separator, IC5, via a low-pass filter, R21-C29.

Power supply

The 12-V power supply on the board is conventionally based on a rectifier, D1-D4, a smoothing capacitor, C17, and a voltage regulator, IC1. The input of the supply may be provided with an alternating voltage between 10 V and 12 V.

Syncs and sandcastles

The horizontal sync generator and sync separator is formed by IC5, a TDA2595. This IC also generates the previously mentioned sandcastle pulse.

When pin 9 of the TDA2595 is connected to +12 V via a 15-kΩ resistor, the complete synchronization signal is available as positive-going pulses with a swing of 12 V_{pp}. Inverter T8 is driven by T7, an emitter follower. The open-circuited signal level at the SYNC output of the SCART socket is set to about 2 V_{pp} by voltage divider R35–R37 at the collector of T8. When this output is loaded, the signal level drops to about 1 V_{pp}. When a multi-sync monitor with a TTL-compatible sync input is used, resistor R37 must be changed to 390 Ω.

The TDA2595 requires the horizontal and the vertical blanking pulse to generate the super-sandcastle pulse. This four-level pulse contains the following timing information:

- 0 V = picture period and reference level
- +2.5 V = vertical blanking
- +4.5 V = horizontal blanking
- +11 V = burst gate

The burst gate is obtained from the PLL-controlled line frequency generator in the TDA4660. It enables the PAL decoder to time the insertion of the 4.43 MHz colour burst in the horizontal blanking period. Since the horizontal and vertical blanking pulses are normally generated in the deflection circuits of the TV set, they must be generated separately in the converter. This is achieved by a dual monostable, IC6.

The positive-going composite synchronization signal at the emitter of T7 is passed through low-pass filter R33-C39, so that the vertical synchronization component remains. It triggers one of the monostables via pin 4. At the output, a 1.2-ms long pulse appears, which is mixed with the sandcastle pulse via R32. The output signal of the horizontal sync oscillator (at pin 4 of IC5) is fed to the second monostable in IC6. This supplies a 10-µs long pulse which is fed back to the TDA2595 for use as the horizontal blanking level in the sandcastle pulse.

Construction and adjustment

Although the circuit is relatively complex, its construction on the single-sided printed-circuit board shown in Fig. 7 is straightforward. Start the construction by fitting the five wire links on the board. The voltage regulator, IC1, must be bolted to a fairly large, vertically mounted heat-sink before its terminals are soldered. If the SCART socket has mounting holes in the flanges, they must be used to secure the plastic body to the printed-circuit board with the aid of two small screws (M3) and nuts. Some SCART sockets have snap-in arms at the sides for which holes must be drilled in the PCB. Do not forget to set the three multiturn presets to the centre of their travel before or after they are mounted: else, strange picture effects may occur when the converter is first switched on, and you may have a hard time finding the cause of the problem, when there is nothing wrong with the circuit.

On completion of the solder work, inspect the printed-circuit board very carefully. Check the orientation of all ICs, diodes and electrolytic capacitors against the overlay printed on the board and shown in Fig. 7b.

Apply power to the converter and check that its current consumption is about 350 mA at 12 V. Next, adjust preset P1 until the PLL runs free at the line frequency, 15,625 Hz (64 µs), which can be measured at pin 4 of IC5. Apply a colour input signal, and adjust trimmer capacitor C25 until the monitor switches to colour. In most cases, the colour will be on already with the trimmer set to roughly half-way of its travel. Check that the 8.86 MHz oscillator starts properly by switching the converter on and off a few times. The colour should come on immediately after switching on. If it does not, carefully re-adjust the trimmer. Finally, adjust the colour trap, L1. Apply a CVBS signal and adjust the inductor for minimum chrominance subcarrier amplitude. This measurement is best carried out with an oscilloscope connected to pin 12 of IC2. When an oscilloscope is not available, adjust L1 for minimum moiré interference in the colour picture. ■

WorldRadioHistory

PT100 THERMOMETER

Depending on the type of platinum probe used, the thermometer presented here has the unusually large range of –100 °C to +1000 °C. The unit meets the demand for accurate temperature measurement and control in, say, engines, freezers, ovens and heating systems.

J. Ruffell

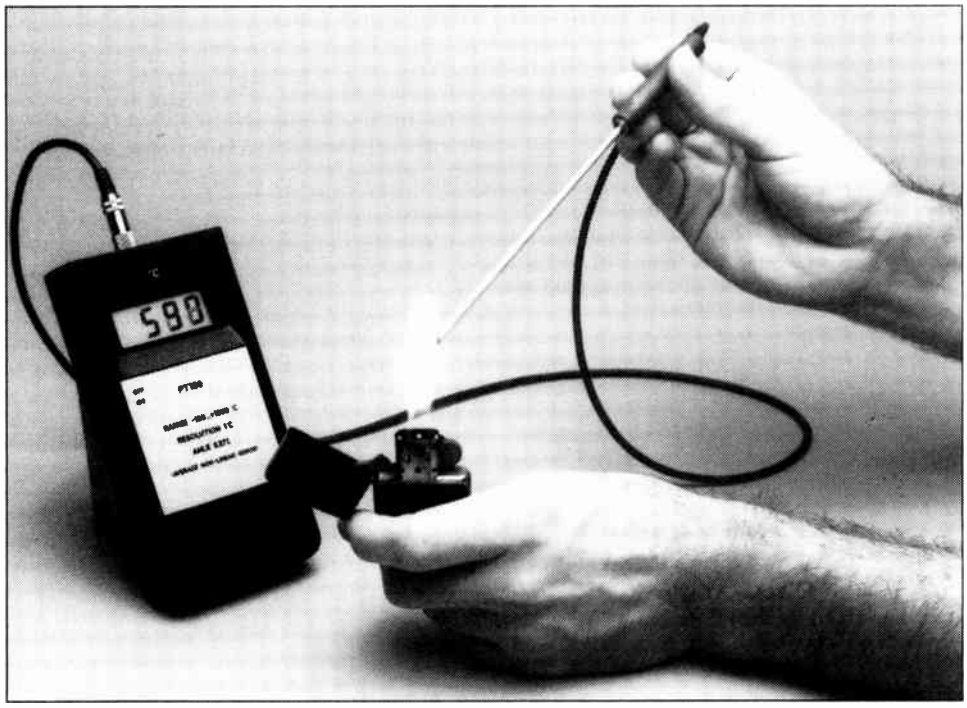

MAIN SPECIFICATIONS

- Temperature range: –100 °C to +1000 °C
- Resolution: ±1 °C
- Average non-linear error: 0.367%
- Low-battery warning: U_b < 7.6 V
- Overflow warning: Probe not connected
- Power supply: 9-V PP3 battery
- Current consumption: 2 mA
- Suitable for use with all Pt100 platinum probes

TEMPERATURE sensors come in many shapes and for many different purposes. An example is the well-known body thermometer, an analogue instrument with a relatively small measurement range and an accuracy of about 0.1 °C. A more playful thermometer is the one found on many desks these days. This type indicates the room temperature by means of coloured areas. Unfortunately, both the body thermometer and the desk-top thermometer are unsuitable for measurement of relatively high or low temperatures, or temperatures that change over a relatively large range. Temperature measurement in a deep-freezer, a boiler or a kitchen oven invariably requires the use of a sensor fitted in a probe, so that the temperature can be read safely, i.e., at some distance from where the 'heat is on'.

The effect of temperature changes plays a role in almost any phenomenon described by physics. In many cases, the factor temperature is one that must be ruled out, or compensated. The present thermometer uses exactly this principle of compensation. In terms of measurement techniques, two types of temperature sensors exist: active and passive.

Active sensors, which include (inexpensive) thermoelements, supply a temperature-dependent voltage. Unfortunately, such elements invariably require a reference element since they can only measure temperature differences. Also, to avoid measurement errors, the wire material must be suitable for the relevant thermoelement. Non-linearity can be quite a problem with these devices, and may amount to no less than 2 °C in the range 0 °C to 100 °C. By virtue of their small size, the wide variety of enclosures, and the ability to work at temperatures up to 1500 °C, thermoelements are used mainly for industrial applications. In these, the problem of non-linearity is usually solved by a computer which corrects the thermoelectric voltages of many hundreds of measurement locations to give an approximation of the true temperature.

The passive way: platinum resistors

Resistance thermometers fall into the category of passive sensors. Their underlying principle is the change in resistance in metals, semiconductors and electrolytes as a function of temperature. The actual changes are specific to the material in question. In the case of metals, the relation between temperature and resistance is virtually linear. The relative change of resistance as a function of temperature is generally called the temperature coefficient, dR/dT. Since this coefficient is also temperature-dependent, an average coefficient, α, is defined for the change between 0 °C and 100 °C. For pure platinum (Pt),

$$\alpha_{Pt} = 3.92 \times 10^{-3} \quad [°C^{-1}]$$

The pure metals have the highest values for α, and have much better characteristics than any alloy, both as regards ageing effects and repeatability of once established coefficient values. A further advantage is that the dependency of resistance on temperature is mathematically simple. In the case of platinum, for instance, the dependency is ex-

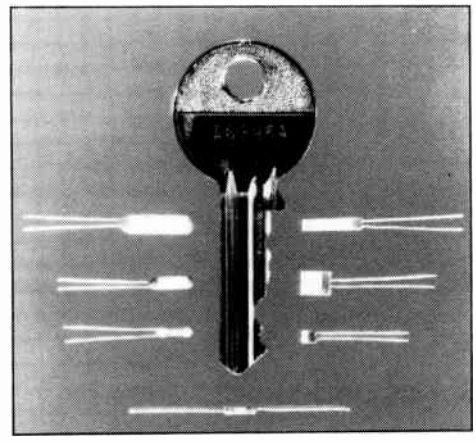

Fig. 1. Pt-100 resistors in various sizes (photograph courtesy Sensycon GmbH).

WorldRadioHistory

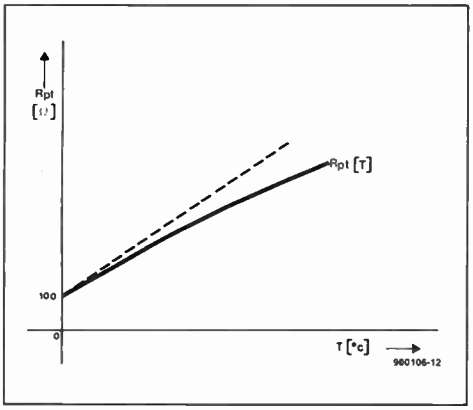

Fig. 2. Non-linearity of the resistance of a Pt-100 sensor as a function of temperature.

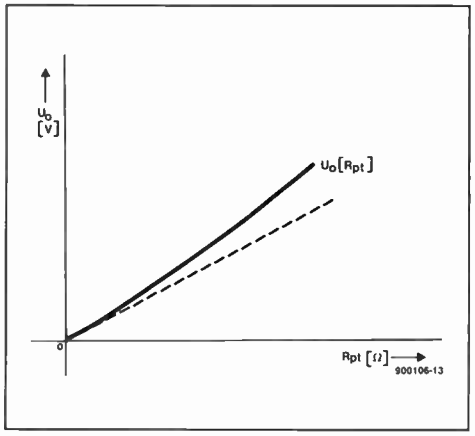

Fig. 3. The input voltage of the read-out must be corrected to achieve a linear response.

pressed by an equation with a single power of two. In practice, platinum resistors inevitably contain small impurities which lower the value of α.

In most cases, the platinum resistor consists of a strip of platinum wound on a carrier. To prevent leakage currents in the resistor, the winding is either covered by an enamel or a glass-silk coating (for low-temperature applications), or moulded into glass or a ceramic substance (for temperatures up to 850 °C). The latter type of resistor is usually protected against physical or chemical influences by a metal tube. It should be noted that the actual size and shape of the resistor may cause large measurement errors. When, for instance, the resistor is immersed

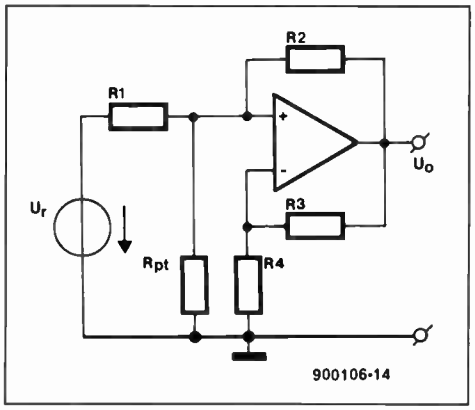

Fig. 4. Temperature correction circuit based on an operational amplifier with feedback. The linearizing function is determined by resistors R1 to R4.

half-way into melting ice, while the other half is in air of 25 °C, the measured temperature will be about 10 °C. This type of bad measurement practice is illustrated in the introductory photograph: the measuring resistor in the probe is not entirely in thermal contact with the flame that heats it. The result is that the measured temperature is much lower than the actual temperature. Also, the measuring resistor in the metal cover may be damaged because of the high flame temperature.

Resistors composed of small ceramic carriers with platinum layers have been in production at several manufacturers for quite some time now. Like thermoelements, these resistors allow multi-point temperature measurement systems to be set up, with a possibility to eliminate errors caused by unfavourable positioning.

The main problem for the manufacturers of these devices is, however, to ensure a consistent value of α, for which most national standards institutions have set up a requirement of $\alpha = 0.98\ \alpha_{Pt}$.

Industrial requirements

Repeatability in the use of platinum resistors, and the ability to compare results obtained with different (industrial) thermometers have created a need to define standard tolerances and measurement conditions. The DIN IEC751 specification defines an average temperature coefficient, α, of 3.85×10^{-3}. A set of equations has been developed for platinum resistors (Pt100) which have a resistance of 100.00 Ω at 0 °C. These equations allow standard value tables to be set up. For the Pt100 material, the resistance, $R_{(t)}$, in the temperature range from −200 °C to 0 °C is described by

$$R_{(t)} = R_0 \{ 1 + At - Bt^2 - C\,(t - 100\ °C)\,t^3 \}$$

while in the temperature range from 0 °C to 850 °C the equation is simplified to

$$R_{(t)} = R_0 (1 + At - Bt^2) \qquad [1]$$

in these equations,
$R_0 = 100.00\ \Omega$
$A = 3.90802 \times 10^{-3}\ °C^{-1}$
$B = 5.80195 \times 10^{-7}\ °C^{-2}$
$C = 4.2735 \times 10^{-12}\ °C^{-4}$

The tables set up on the basis of equation [1] enable a temperature value to be found with each measured resistance.

It should be noted that there are also (much more expensive) resistors specified at 500 Ω or 1000 Ω at 0 °C (Pt500 and Pt1000 respectively). It will be clear that these types require their own look-up table to be set up.

According to the DIN IEC751 specification, platinum resistors are divided into four tolerance classes, A, B, C and D. The tolerance on class-A devices is defined as

$$°C_A = \pm (0.15 + 0.002\ |t|)$$

and that on class-B devices as

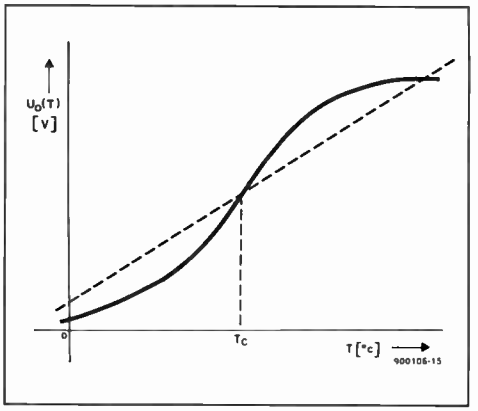

Fig. 5. The temperature deviation of a Pt-100 probe may be corrected by setting a cross-over point, T_c, at a suitable temperature. Note that in this drawing the deviation from the temperature line is not to scale.

$$°C_B = \pm (0.30 + 0.005\ |t|)$$

In practical terms, this means that a temperature difference as high as 2.5 °C is permissible when two class-B resistors are used at at about 200 °C.

A further source of errors is formed by the heating of the resistor as a result of the auxiliary energy. To keep these errors in check, DIN IEC751 specifies a maximum measurement current of 10 mA at 100 Ω.

Electronic compensation

The Pt100 thermometer consists of a resistance-to-voltage (*R-U*) converter and an LCD driver. The two functions are elegantly combined in the Type ICL7106 from GE-Intersil. When this IC is used as a read-out for the temperature range from 0 °C to 100 °C, a simple regulated current source is adequate for the *R-U* converter. In this range, α is virtually constant, i.e., the relation between resistance and temperature is virtually linear. At a temperature of a couple of hundred degrees celsius, however, the non-linearity becomes significant (see Fig. 2). The idea of linearization by means of a computer is dismissed because the original aim was a portable instrument.

Fortunately, compensation with the use of an analogue circuit is inexpensive and simple to implement. The curve in Fig. 2 shows that the sensitivity (rate of rise) of the Pt100 sensor drops with increasing temperature. The function of the compensation circuit is, therefore, to raise the output quantity (i.e., voltage) non-proportionally in relation to the input quantity (i.e., resistance). If this works, the result is a compensation of the resistance deviation (see Fig. 3), as expressed by

$$U_{o(Rt)} = R_t\,U_r\,/\,(\,D + R_t\,E\,) \qquad [2]$$

where R_t is the Pt100 resistance at a certain temperature, and U_r is the reference voltage (auxiliary energy). Note, however, that equation [2] is only valid when

$$U_r > 0,\ D > 0,\ \text{and}\ E < 0$$

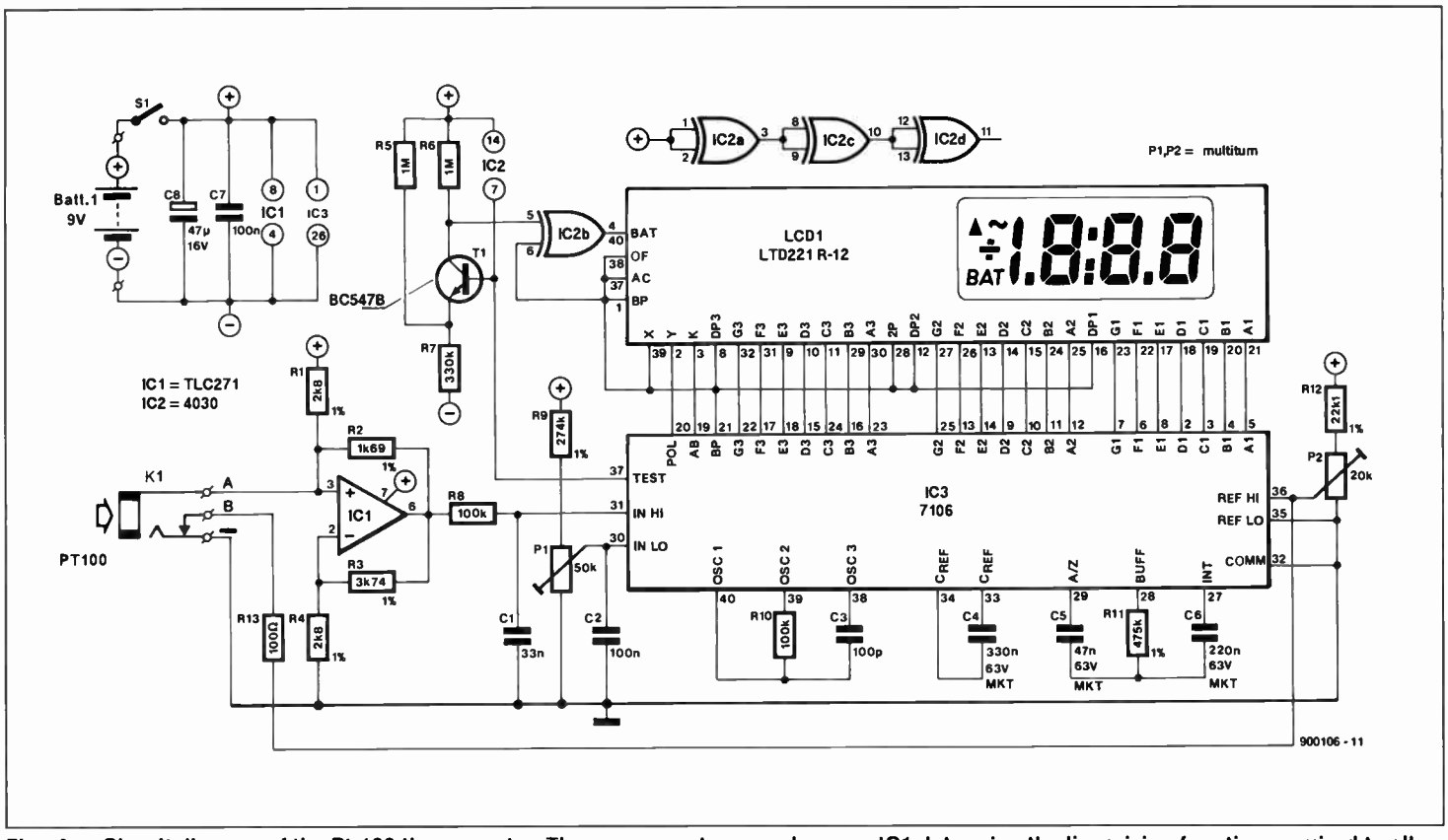

Fig. 6. Circuit diagram of the Pt-100 thermometer. The components around opamp IC1 determine the linearizing function required to allow the unit to operate over a wide temperature range.

replacing R_t in equation [2] by [1] and rearranging

$$U_{0(Rt)} = U_{0(T)} = \frac{U_r}{D / \{ R_0 (1 + At - Bt^2) \} + E}$$

such a function may be implemented by an amplifier of the type shown in Fig. 4. The constants D and E are defined as

$D = R1 / (1 + R3/R4)$
$E = (R2 - R1 R3/R4) / \{ R2 (1 + R3/R4) \}$

Unfortunately, it is not easy to adjust the variables, i.e., resistors R1-R4 and the reference, U_r, to achieve optimum linearization of $U_{o(T)}$, and this is where the computer does come in. As illustrated in Fig. 5, the requirement for $U_{o(T)}$ is to have a cross-over point at temperature T_c. The computer can help to find resistor and reference values that result in the smallest possible deviations from the ideal compensation curve. Assuming that resistors from the E96 series are to be used,

R1 = 2800 Ω
R2 = 1690 Ω
R3 = 3740 Ω
R4 = 2800 Ω
U_r = 2.8 V

These values result in a cross-over temperature, T_c, of 383.5 °C, and ensure a (theoretical) maximum error of 0.6%, or an average error of 0.37%, over the range of −100 °C to +1000 °C. The rate of rise of the output voltage produced by the linearizing circuit is 1 mV per degree Celsius.

Practical circuit

The circuit diagram of the Pt100 thermometer (Fig. 6) has few surprises as it is mainly an application circuit of the well-known ICL7106 LC display driver. The reference voltage is supplied by the 7106, whose COMM terminal (pin 32) is at a fixed potential of 2.8 V below the supply voltage. However, since COMM acts as a ground point, the reference voltage is obtained via resistor R1.

The output voltage of the linearizing circuit is passed through a low-pass filter, R8-C1, before it arrives at the IN-HI input of the 7106. The filter suppresses noise picked up by the wires between the read-out and the Pt100 probe. The off-set voltage at the IN-LO input is adjusted with preset P1 until it is equal to the output voltage of IC1 when the probe is at a temperature of 0 °C. The typical level required to null the display is 0.24 V.

The second preset, P2, determines the linearity factor, which is adjusted at a temperature of 100 °C. When the Pt100 sensor is disconnected from the input socket, K1, the wiper of P2 is taken to ground via R3. The resulting input voltage causes the 7106 to actuate the overflow symbol on the display. The LO-BAT (low battery) symbol is actuated when the battery voltage drops below 7.6 V. This is detected by transistor T1 and gate IC2B. The other components around the 7106 form part of the standard application circuit, and merit no further comment.

Construction

Little needs to be said about the construction of the digital read-out. The printed-circuit board shown in Fig. 7 makes life easy even for those with relatively little experience in building electronic circuits. Start the construction with the wire links on the board. Next, mount the resistors, the capacitors and the IC sockets. The transistor, the 7106 and the LC display are fitted last. The wires between the jack socket and the printed-circuit board must be relatively thick, and remain as short as possible. On completion of the cir-

Pt100 SENSORS FROM MURATA

A range of thin-film platinum-100 (Pt100) resistors complying with the DIN IEC751 specification, classes A, B, C or D, is available from Murata Mfg. Co. Ltd. Other resistor values are 500 Ω and 1000 Ω in various sizes. An information leaflet covering the background theory, DIN IEC751 specifications, and product classification is available from Murata. This leaflet also contains the resistance look-up and conversion tables mentioned in this article.

Murata Electronics (UK) Ltd. • 5 Armstrong Mall • Southwood • FARNBOROUGH GU14 0NR. Telephone: (0252) 523232. Fax: (0252) 511528.

Murata Erie North America Inc. • 2200 Lake Park Drive • Smyrna • Georgia 30080-7604. Telephone: 404-436-1300.

WorldRadioHistory

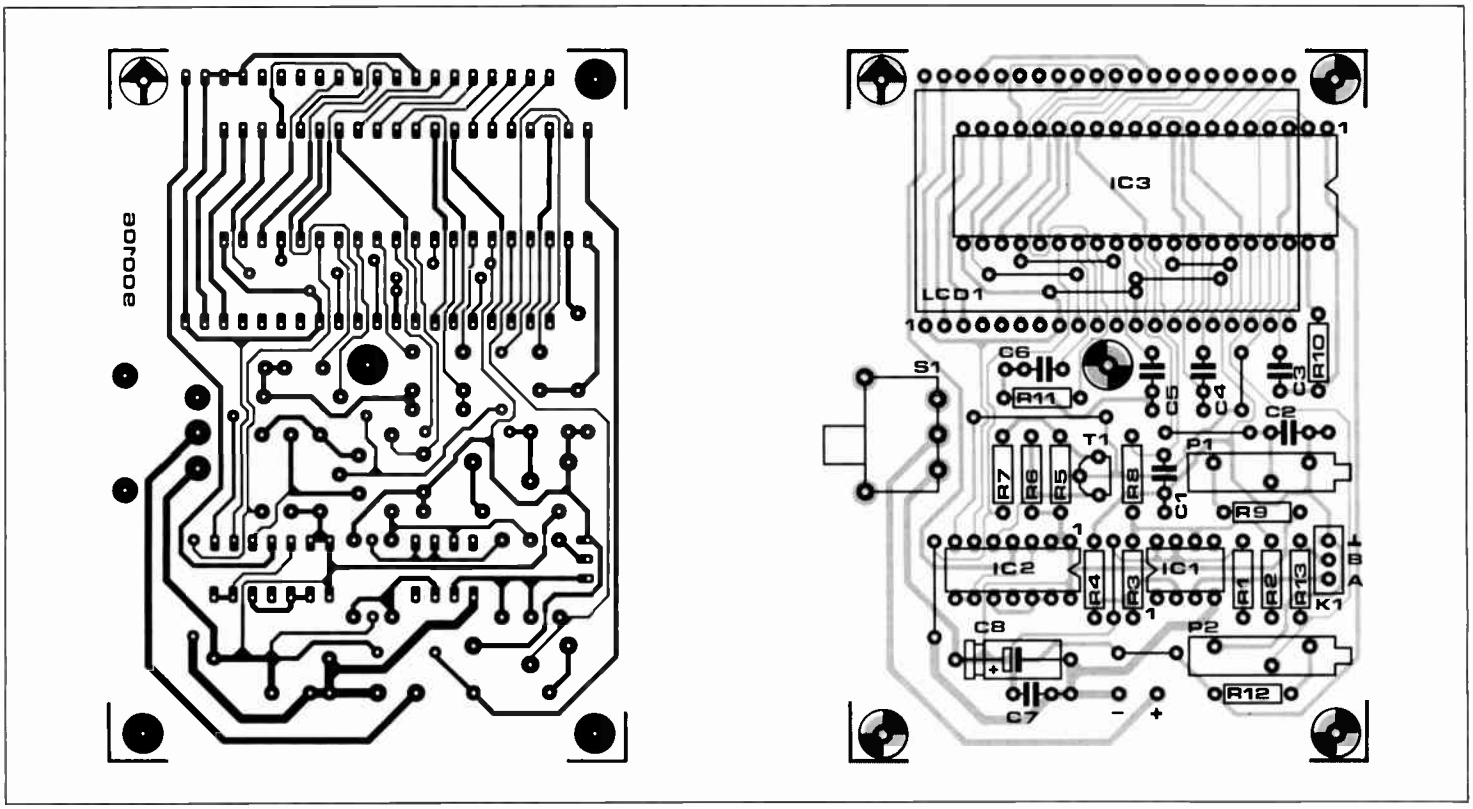

Fig. 7. Single-sided printed-circuit board for the thermometer.

COMPONENTS LIST

Resistors:

2	2kΩ8 1%	R1;R4
1	1kΩ69 1%	R2
1	3kΩ74 1%	R3
2	1MΩ	R5;R6
1	330kΩ	R7
2	100kΩ	R8;R10
1	274kΩ 1%	R9
1	475kΩ 1%	R11
1	22kΩ1 1%	R12
1	100Ω	R13
1	50kΩ multiturn preset	P1
1	20kΩ multiturn preset	P2

Capacitors:

1	33nF	C1
2	100nF	C2;C7
1	100pF	C3
1	330nF 63V MKT	C4
1	47nF 63V MKT	C5
1	220nF 63V MKT	C6
1	47µF 16V	C8

Semiconductors:

1	BC547B	T1
1	TLC271	IC1
1	4030	IC2
1	7106	IC3

Miscellaneous:

1	3½-digit LCD, e.g., Philips Components LTD221R-12	LCD1
1	3.5-mm jack socket with switch	K1
1	on/off slide switch for PCB mounting	S1
1	Pt100 probe, e.g., GFT2060 (–200 °C to +600 °C)	
1	9-V PP3-size battery	
1	hand-held ABS enclosure with display window	
1	printed-circuit board	900106

cuit board, fit it into a hand-held ABS enclosure, for which a suggested front-panel layout is shown in Fig. 8.

Kitchen-table adjustment

As already mentioned, the instrument is nulled with preset P1. Fill a plastic beaker with about 0.5 l water and a handful of ice-cubes from the refrigerator. Stir the mixture until half the ice has melted. Immerse the Pt100 sensor in the icewater, wait half a minute, and adjust P1 until the display reads 0 °C.

Next comes preset P2, which is to be calibrated at 100 °C. This is the temperature of pure, boiling water at an air pressure of 1013 mbar. When rain water or distilled water is used, the change of the boiling point caused by impurities is negligible for our purpose. The air pressure, however, at which the water boils is of great importance. The dependence of the boiling temperature, t_p, on the air pressure, p, may be written as

$$t_p = 100 + 0.0277\,(p - 1013) \quad [°C]$$

where p is in millibar, mb). To find out about your local air pressure, consult a weather bureau, listen to navigation services (airports), or contact an amateur meteorologist. Note that the official air pressure is usually the value measured at sea level. To correct this value for your location, deduct 1 mb from the official pressure for every 8 m of altitude above sea level. For example, if you live at 80 m above the sea level, the air pressure is 80 mb lower than that stated by the weather bureau.

The actual calibration of the read-out is simple: immerse the Pt100 sensor in boiling water, and adjust P2 until the display shows the calculated temperature.

Temperature range

The thermometer is capable of measuring temperatures between –100 °C and +1000 °C provided a suitable Pt100 probe is used. Whatever probe you use, be sure to observe the manufacturer's specifications as regards the temperature range. In most cases, the maximum temperature at which the probe may be used is determined by the construction and the difference between the coefficients of expansion of glass and platinum wire. The Type GFT2060 probe, for instance, has a temperature range of –200 °C to +600 °C. When connected to the Pt100 thermometer described here, it may be used for reliable temperature measurement in the range between –100 °C and +600 °C. ■

SOFTWARE SERVICE

Readers who intend to use the thermometer for measurement over a relatively small range may like to know that a program is available to calculate the values of R1 – R4 for the best possible linearity, and, consequently, higher accuracy. This program is available on request through our Readers Services as order no. ESS1481. The diskette format is DOS 360 K.

WorldRadioHistory

PROGRAMMER FOR THE 8751

Intel's 8751 is a powerful 8-bit microcontroller with an on-board EPROM that provides a fairly secure way of protecting the internal code. The unit described here puts you in a position to run a blank check on a 8751, read its contents (if not protected) and, of course, program the device. The programmer, which uses an 8751H for its own 'intelligence', is an extremely simple circuit which works in conjunction with an IBM PC or compatible sporting an RS232 outlet. Comprehensive support software, including assembler and download utilities, are supplied on a disk for this project.

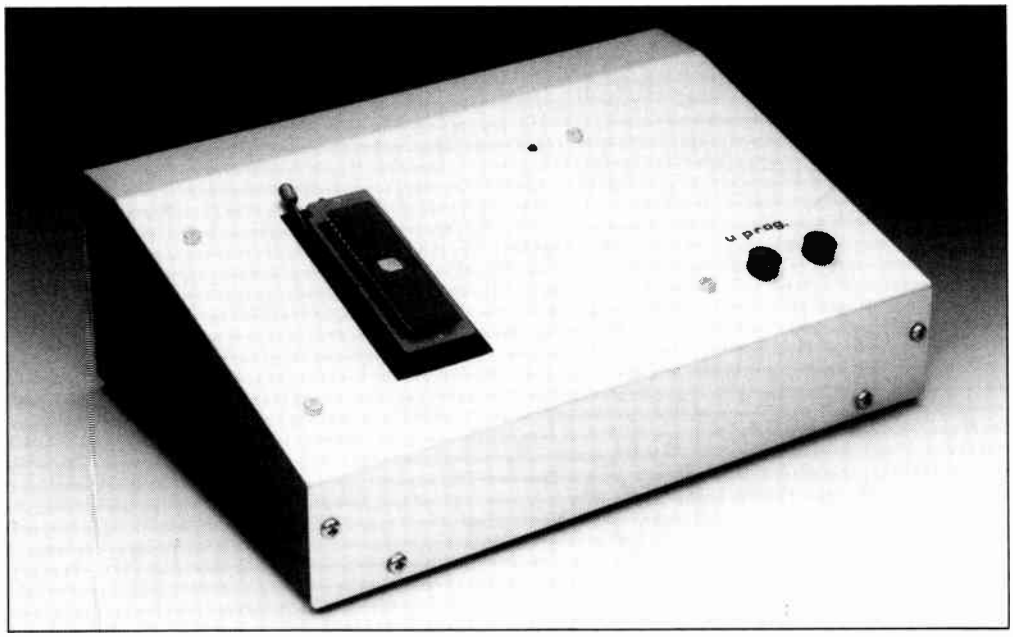

O. Bailleux

FAITHFUL readers of this magazine may remember our using the 8751 in two projects described in earlier issues, namely a microcontroller-driven power supply (Ref. 1) and an autonomous I/O controller (Ref. 2).

Every programmer for a microcontroller—or, for that matter, for any EPROM, PROM, PAL, EEPROM or GAL—consists basically of two parts: (1) a power supply to provide the supply voltage for the control circuit, and the programming voltage, and (2) a control circuit, which is usually an I/O interface that allows an external computer to set the data and addresses for the chip to be programmed, to supply the necessary timing and control signals, and to read data from the memory section of the component to be programmed.

The present programmer is connected to an RS232 port of an IBM PC or compatible. The actual connection consists of three or five wires, which can be several metres long.

System timing and addressing

Before describing the circuit of the programmer, it is useful to discuss the basic signal timing relevant to the 8751H that controls the functions of the unit. Mind you, we are talking about the microcontroller that is permanently present in the circuit, i.e., not the device to be programmed.

To begin with, the 8751H checks the RS232 communication with the PC. The protocol is simple: as shown in Table 1, commands issued by the PC consist of one byte, which may be followed by a number of parameters. Some commands expect the programmer to return one or more bytes. An example:

- to read the byte at address 0 in the EPROM in the 8751, the PC sends command 03, followed by operands 00 and 00, which form the 16-bit address code. The programmer responds to this command by returning the byte at address 0000.
- The timing of the data flow between the PC and the programmer is illustrated in the diagrams in Figs. 1 (program operation) and 2 (read operation).
- A test command allows us to check that the programmer is operational. In response to this command, the programmer returns two bytes to the PC.

The above description of the commands is not complete, and serves merely to illustrate the way in which the programmer is controlled via a terminal, i.e., a PC running the program developed by the author. Full information on the communication between the two units is provided in the

Command	Operation	Returned value
01 X Y	test connection	Y X
02 X Y Z	write byte Z at address Y + (256 X)	none
03 X Y	read byte Z at address Y + (256 X)	Z
04	switch 5-V supply on	none
05	switch 5-V supply off	none
06	switch programming voltage on	none
07	switch programming voltage off	none
08	initialisation	none

Table 1. The command set for the programmer: simple and effective.

WorldRadioHistory

README.DOC file on the diskette available for this project.

The hardware

A glance at the circuit diagram in Fig. 3 illustrates to what extent a microcontroller can reduce the component count in a programming circuit. The 8751 to be read or programmed, IC4, is plugged into a zero-insertion force (ZIF) socket.

The circuit may be divided into four parts: the power supply, the host microcontroller, the I/O interface, and the microcontroller to be programmed. Each of these parts will be discussed separately below.

Power supply

This has few surprises. Transformer Tr1 has two separate 9-V secondary windings. The one connected to K2 powers a conventional 5-V supply based on a 7805 voltage regulator. The other powers a symmetrical ±12-V supply with two zener diodes, D11 and D12, as the regulating elements. The symmetrical supply is required for the operational amplifier in the I/O interface circuit.

8751 in ZIF socket

The 8751 drawn in position IC4 is the chip to be programmed or read. The other 8751, IC1, is the internal controller of the programmer. Note that IC4 is connected to a 4-MHz quartz crystal, and IC1 to an 8-MHz crystal. The programming voltage supplied by the circuit around T1 and T2 is applied to the $\overline{EA}/V_{pp}$ (external access enable/programming voltage) terminal of IC4. This voltage is 21 V, and must not exceed this value on penalty of destroying the 8751 to be programmed. The externally applied programming voltage is switched by the P2.7 line of the host controller, IC1, via transistors T1 and T2. It should be noted that there are also CMOS versions of the 8751, which must be programmed at 12.5 V.

I/O interface

The I/O interface takes the form of an opamp-based RS232 send/receive buffer. The data transmitted via port line P2.0 of the host controller is converted to positive and negative levels by opamp IC2. The transmitted data (TxD) is available at pin 2 of a 5-way DIN socket, K1. Pins 3 and 5 are interconnected to form a zero-modem setup with dummy handshaking between RTS (request to send) and CTS (clear to send). The type of connector and its pinning are identical to those used on the BASIC computer (Ref. 3), so that the same cable may be used to connect the PC's RS232 outlet.

The RS232 signal received from the computer (RxD) is converted to 5-V swing by the circuit around transistor T3. The host controller reads the received commands and data via port line P2.1.

The two-transistor driver and the relay shown to the right of the RxD interface serve to pull four inputs of the 8751 in the ZIF socket to +5 V when the P2.6 line of the host controller goes high. The on/off state of the relay is indicated by a LED, D3.

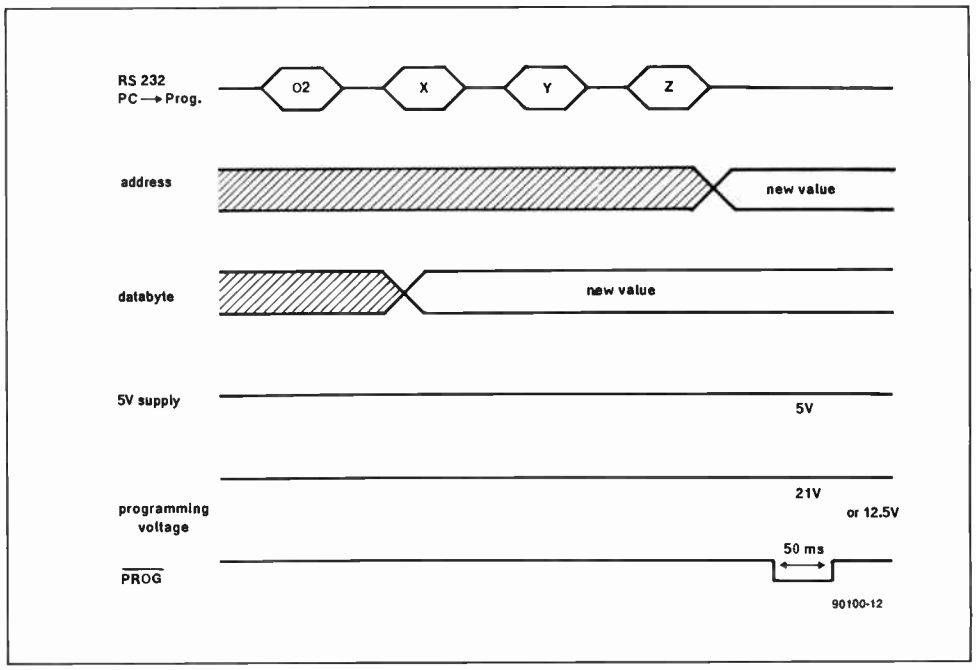

Fig. 1. Timing diagram for a programming operation.

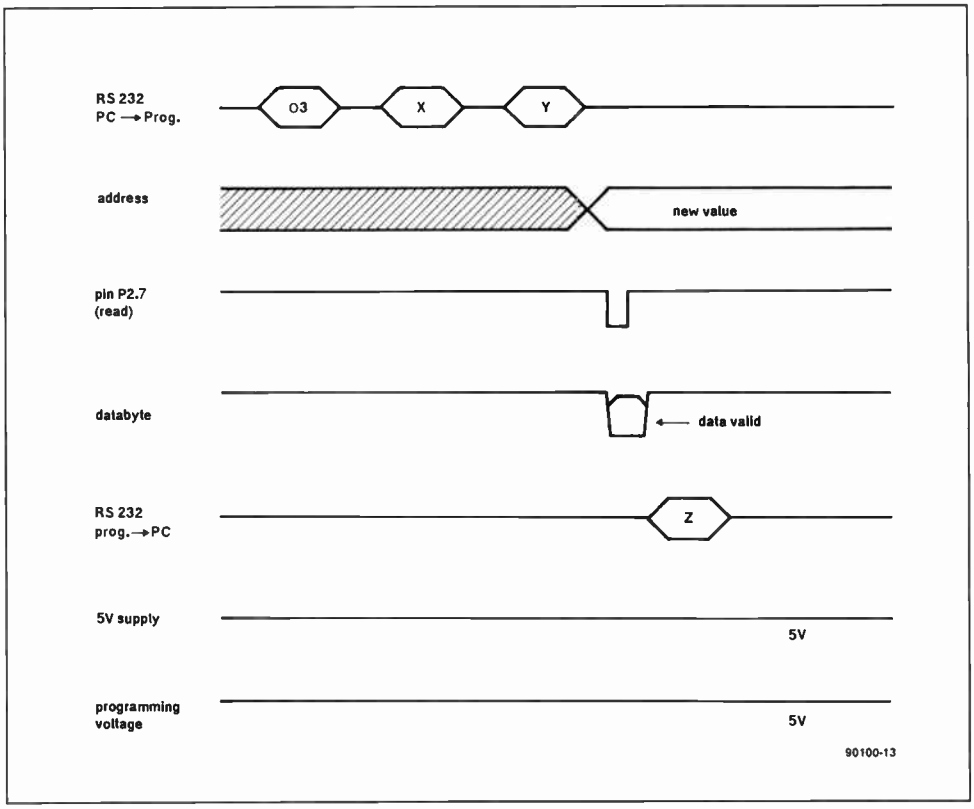

Fig. 2. Timing diagram for a read operation.

Host processor

The host processor in this circuit performs quite a few tasks. It has internal EPROM as well as RAM, and handles the serial I/O communication with the PC, the control of its peripherals, and virtually all read/write and program timing of the chip in the ZIF socket. The circuit operates at a clock of 8 MHz, and is reset on power-up by capacitor C3. Pull-up resistors are fitted on all eight lines of port P0.

Although the 8751 has a built-in serial interface, this is not used here because it requires a 11.0592 MHz quartz crystal in the clock oscillator. Here, two port lines are used in combination with a few lines of program code to allow a less expensive and more widely available quartz crystal of 8 MHz to be used.

Software

When we talk about the software for this project we mean two different things: first, the control program that runs in the host controller, IC1, and, second, the set of user programs that runs on the PC. The first is 'invisible' as it comes in a ready-programmed 8751, the second is supplied on diskette. To assist those who want to try their hand at customizing the programmer, and, of course, at developing programs for the 8751, the author has included a number of utilities and source list-

WorldRadioHistory

SOFTWARE SERVICE

This project is supported by two items in the Elektor Software Service (ESS) range:

- a diskette, order number 1471 (MS-DOS format, 5¼-inch, 360 k);
- a ready-programmed 8751, order number 7061.

For prices and details on ordering, please refer to the Readers Services page elsewhere in this issue.

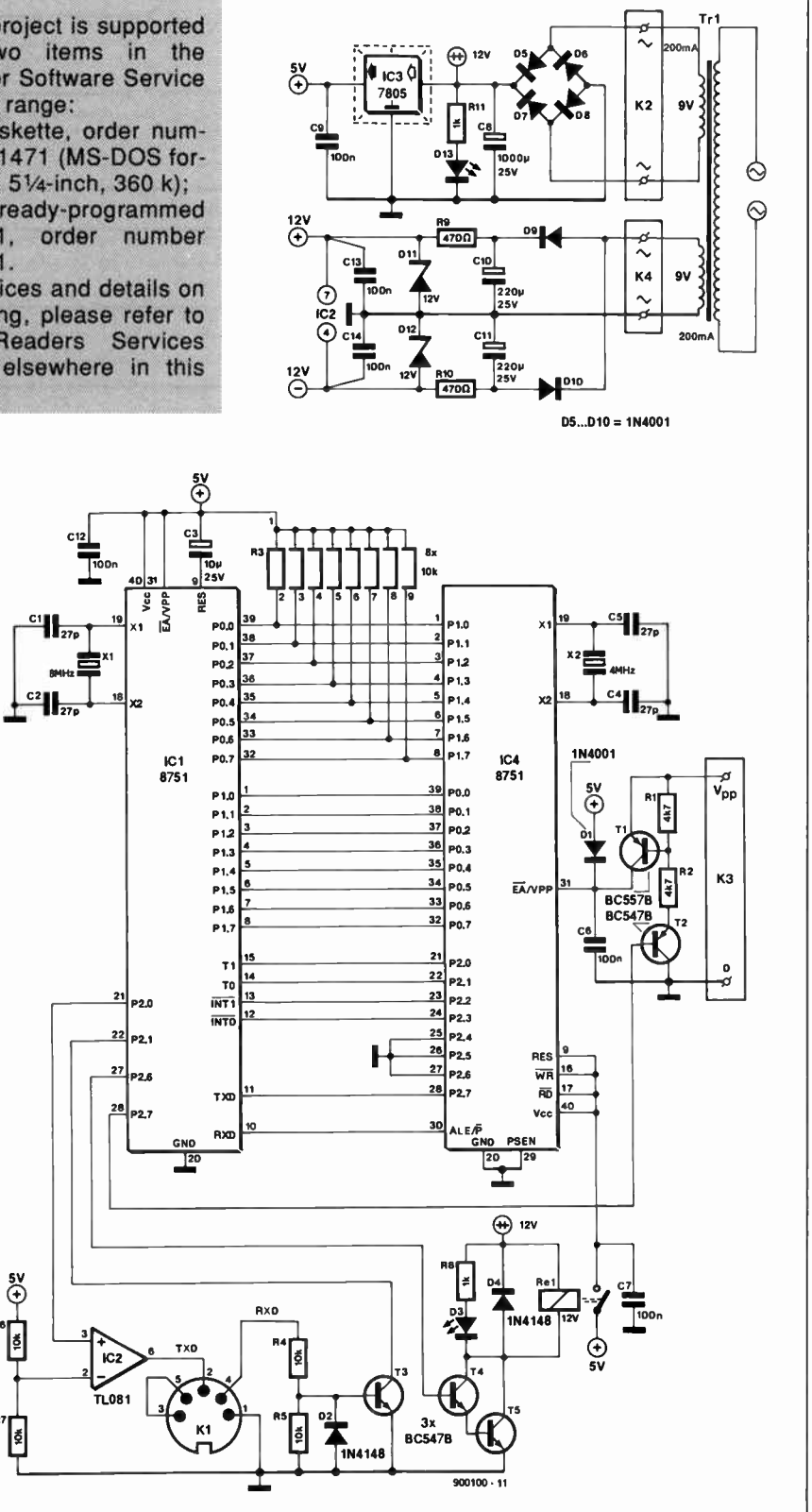

Fig. 3. Circuit diagram of the programmer. Note that the programming voltage must be provided by an external supply.

COMPONENTS LIST

Resistors:

2	4kΩ7	R1;R2
1	8-way 10kΩ SIL	R3
4	10kΩ	R4 – R7
2	1kΩ	R8;R11
2	470Ω	R9;R10

Capacitors:

4	27pF	C1;C2;C4;C5
1	10µF 25V	C3
6	100nF	C6;C7;C9;C12; C13;C14
1	1000µF 25V	C8
2	220µF 25V	C10;C11

Semiconductors:

7	1N4001	D1;D5 – D10
2	1N4148	D2;D4
2	LED 3-mm	D3;D13
2	12V 1W zener diode	D11;D12
1	BC557B	T1
4	BC547B	T1 – T5
1	programmed 8751H	IC1
1	TL082	IC2
1	7805	IC3

Miscellaneous:

1	40-way ZIF socket	IC4
1	8-MHz quartz crystal	X1
1	4-MHz quartz crystal	X2
1	5-way PCB mount DIN socket	K1
1	12-V DIL relay, e.g., Siemens V23127-A0002-A101	Re1
1	mains transformer 2×9V @ 200 mA	Tr1
3	2-way PCB terminal block	K2 – K4
1	heat-sink for IC3	
1	printed-circuit board	900100

ings on the diskette. The program for the PC, PROG.EXE, runs on all XT/AT IBM machines and compatibles fitted with a Hercules, EGA, VGA or CGA video card. PROG.EXE may be started either direct from the DOS prompt, or via the menu in the control program, EV51. This presents the following options in a menu:

- **program** an 8751 with the content of a binary file, which is preferably produced by an 8751 assembler program. The source code must be written starting at address 0, corresponding to the first command execution address of the 8751.
- **blank check** of an 8751
- **read** the content of an 8751, starting at a user-defined address. Read operations are not possible on chips in which the security bit has been set to protect the internal code.

Simply press the arrow keys to select the desired option, or the ESC key to leave the program. Incidentally, the only way to reset the security bit is to erase the EPROM.

The files on the diskette supplied for this project fall into three groups:

- **source** for assembler file manipulation;
- **assembler** for converting source code into object code;
- **programming** for loading an 8751 with a block of object code.

The data speed and protocol between the PC and the programmer are set to 2400 bits/s, 8 data bits, 1 stop bit, and no parity.

Check to make sure...

A few important notes must be made at this point. First, make sure you know the programming voltage of the 8751, and apply either 12.5 V (CMOS devices) or 21 V as required.

Before inserting an 8751, test the programmer by running a blank test on the empty ZIF socket. The 5-V supply LED must light during the read operation. All bytes returned to the PC must read FF. Next, run a programming test on the empty socket, and use an oscilloscope to check the timing and

WorldRadio-History

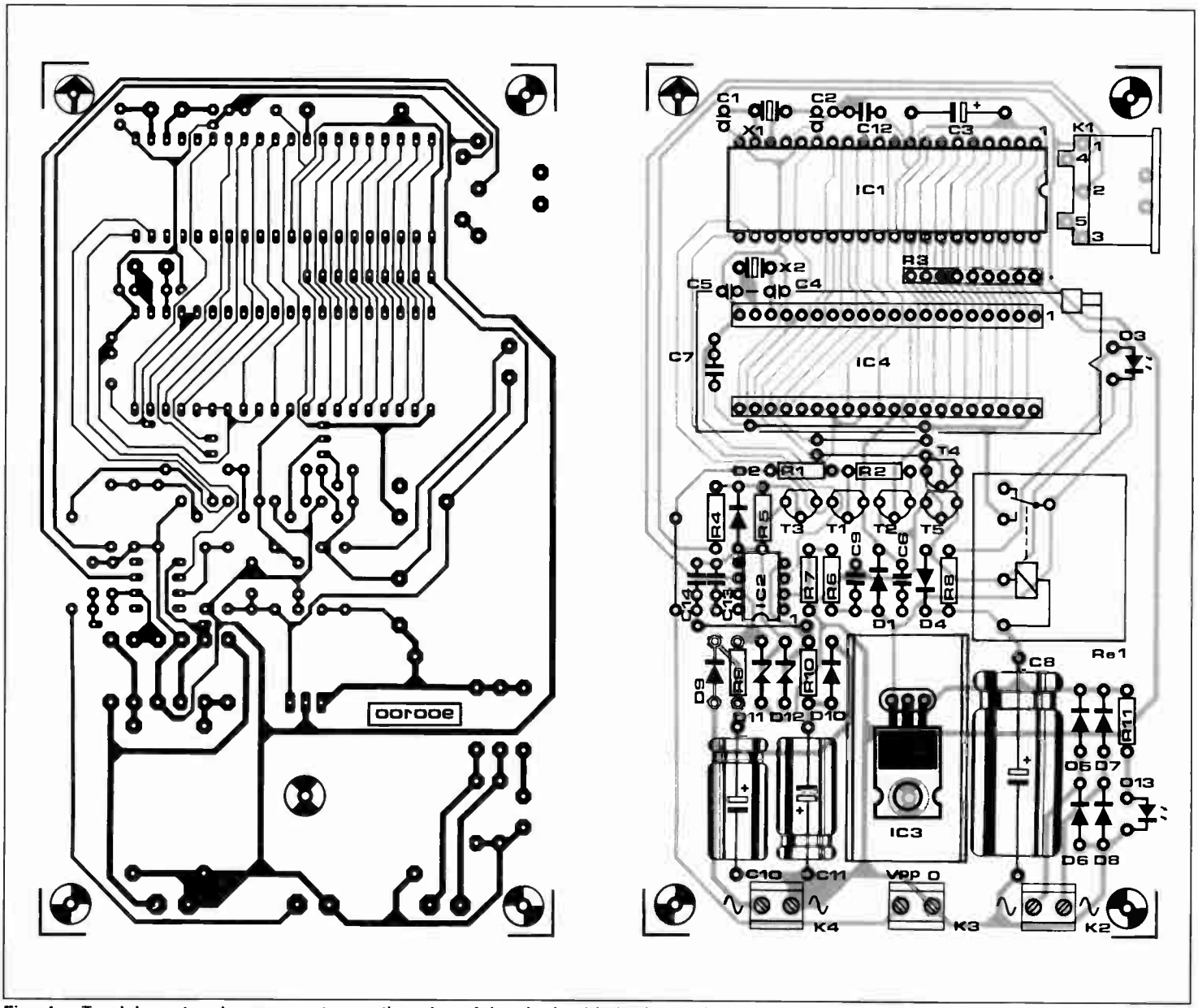

Fig. 4. Track layout and component mounting plan of the single-sided printed-circuit board. Fit a 40-way ZIF socket in position IC4.

the waveforms shown in Figs. 1 and 2. Measure direct at the relevant ZIF socket pins.

Never insert an 8751 into the ZIF socket when the programmer is switched off, or when the PC presents the "Programmer not operational" message following a blank test.

Construction

The construction of the programmer will present few problems when the ready-made printed-circuit board shown in Fig. 4 is used. Fortunately, the board could be designed single-sided by virtue of the low component count, which, in turn, is the result of the use of an 8751 as the central controller.

Fit the ZIF socket and the LEDs at a height that allows them to protrude from the top or the front panel of your enclosure. Make sure you do not swap the two quartz crystals. If difficult to obtain, resistor network R3 may be replaced with eight discrete resistors, which are mounted vertically, and joined at the top side by a wire that takes them to +5 V.

Finally, make sure you use an 8751H, not an 8751AH(P) which has a number of different specifications and does not work in this circuit.

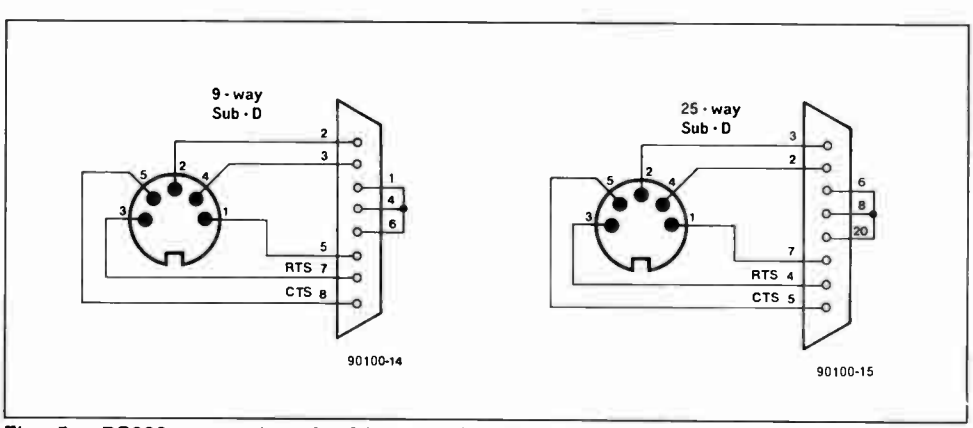

Fig. 5. RS232 connections for 25-way and 9-way sub-D connectors on PCs.

The connection between the PC and the programmer is illustrated in Fig. 5 for PCs with a 25-way D connector (left-hand schematic) or a 9-pin AT-style connector (right-hand schematic). Note the interconnections between the DCD (data carrier detect), DTR (data terminal ready) and DSR (data set ready) lines. If you insist on using a three-wire connection between the PC and the programmer, interconnect the RTS and CTS pins at the side of the PC connector. ■

References:

1. "Microcontroller-driven power supply". *Elektor Electronics* May 1988, June 1988, September 1988.
2. "Autonomous I/O controller". *Elektor Electronics* December 1988.
3. "BASIC computer". *Elektor Electronics* November 1987.

MEDIUM POWER A.F. AMPLIFIER - PART 2

by T. Giffard

Construction

The entire circuit shown in Fig. 2 can be built on the printed circuit board in Fig. 4. The enclosure discussed later on houses the power supply, the various indicators, the on-off switch and all interconnecting wiring.

Dual transistors T1, T2, T5 and T6 are fairly expensive items but they are essential to achieve the high performance. Nevertheless, if your are prepared to accept a somehwat degraded performance, or if you want to experiment, try using BC550/BC560 transistors. These should, of course, be matched pairs to ensure adequate thermal stability. We should add that in our prototypes these devices did not give good results.. Figure 5 shows how the three different types of transistor can be accommodated on the board.

Preset P1 is of a type that can be adjusted from the top to allow setting once the board has been fully populated.

Construction of L1 is shown in Fig. 6. It consists of three layers of 1.5 mm enamelled

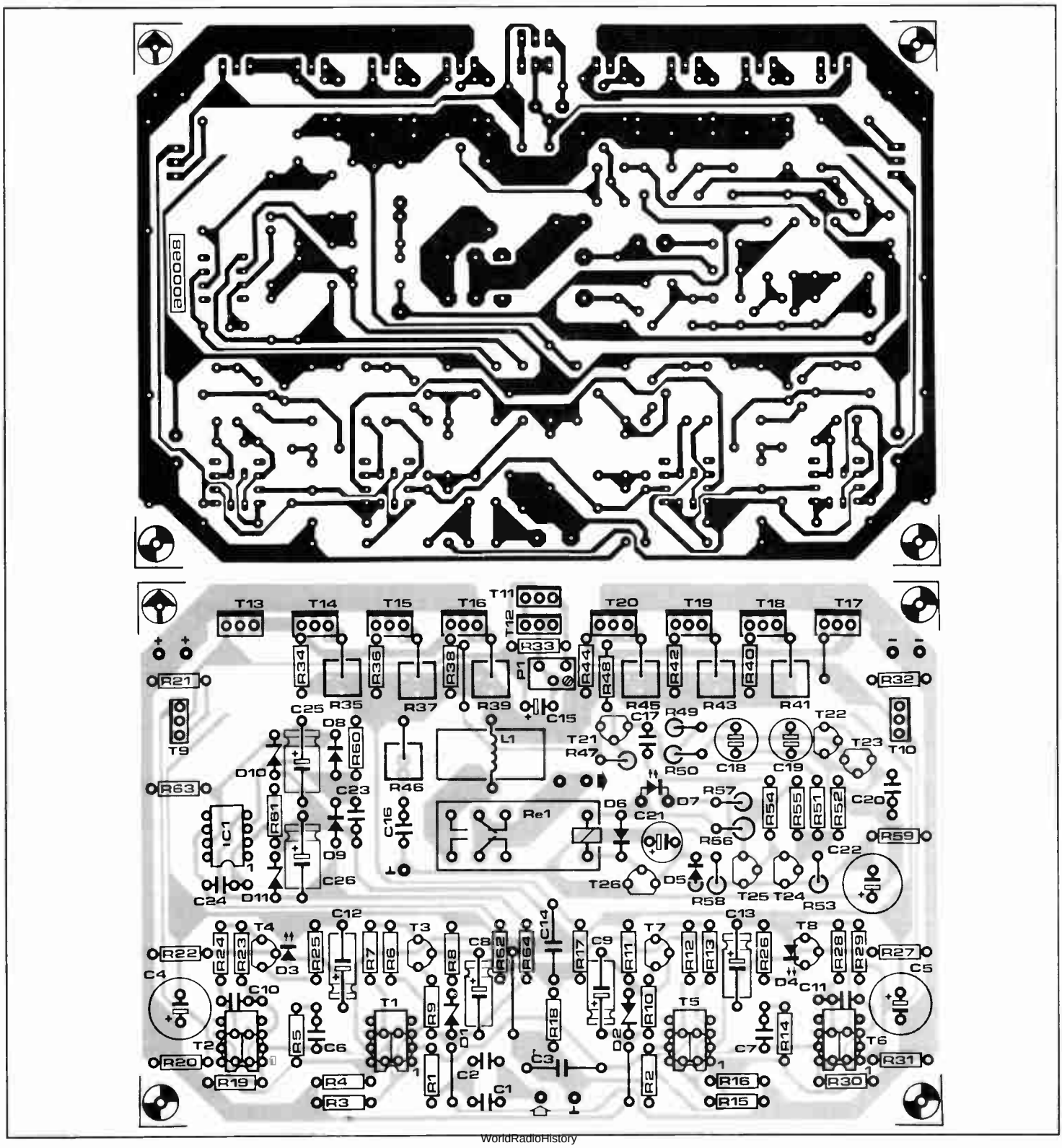

WorldRadioHistory

Fig. 4. Printed circuit board for the medium power a.f. amplifier.

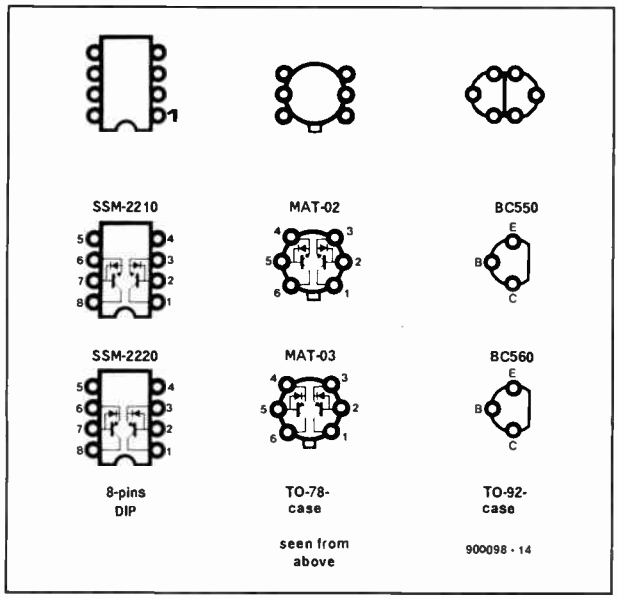

Fig. 5. This shows how the three types of transistor in the T1, T2, T5 and T6 positions may be fitted on the board.

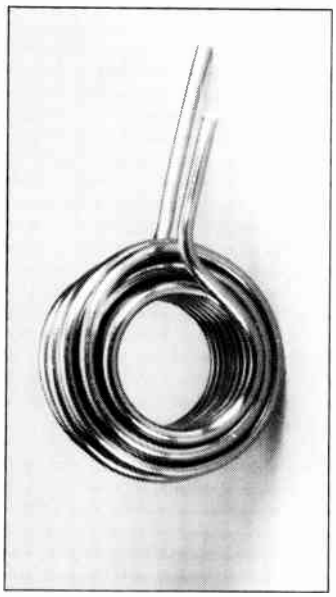

Fig. 6. Output inductor L1 is wound in three layers.

copper wire wound on a 12 mm dia. mandril. The first layer consists of 7, the second of 6 and the last of 5 turns.

Since indicator D7 is located on the front panel, two solder pins in the D7 position on the board will facilitate the wiring later on.

Some standard resistors and all 5-watt types are mounted vertically. This may necessitate lengthening one of the terminals of the 5-watt resistors.

The emitter resistorsof the power transistors should preferably be inductance-free types, but these are very difficult to obtain. Moreover, they are fairly expensive. We have, however, found a very good alternative, which consists of using standard 5-watt resistors in parallel with a 100 nF capacitor, which is soldered at the underside of the board as shown in Fig. 7.

Drivers T9 and T10, as well as T4 and T8, should be fitted, electrically isolated, on small heat sinks, which may need some mechanical support.

Transistors T11–T20 may be screwed directly on to the heat sink. The drawing of the board may be used as a template, since the positions of the centre terminals of the transistors coincide with the distances between the fitting holes. The centre of the holes must be 18 mm above the top of the board. It is advisable to buy the enclosure and heat sink and first ascertain how the heat sink is best fitted to the rear of the enclosure. Enough space must be left for the mains input socket, the phone sockets, the fuse and the loudspeaker connectors. The holes to be drilled in the heat sink are best provided with M3-size threads, since it is virtually impossible to use nuts with this type of heat sink.

The transistors must be isolated from the heat sink. This is best done with the aid of a suitable heat sink compound and ceramic washers: these have a smaller transfer resistance than mica washers.

Transistors T11 and T12 are fitted on to the board in a way that enables both of them to be screwed to the heat sink with one screw and one insulating washer.

Once the construction has been determined, bend the terminals of the driver, output and 'zener' transistors as shown in Fig. 8, so that they protrude slightly from the board; their mounting washers should be located 18 mm above the board. Only when all that has been arranged should the terminals be soldered.

The supply and loudspeaker connections should be made with heavy-duty connectors, since these will carry fairly high currents.

The enclosure

The stereo version of the amplifier is best fitted in a 2-unit high 19-inch enclosure. With the heat sink fitted to the rear panel, there is enough space left for the various connectors.

The front panel houses the mains on-off switch with above it an LED that is connected to one of the power rails via a 5.6 kΩ resistor. It also contains the two LEDs of the protection circuits.

Two rectangular holes must be cut into the rear panel to enable the transistors to be screwed to the heat sink. Make these holes rather slightly too large than too tight to avoid any danger of a transistor touching the enclosure.

The power supplies are fitted in the front section of the enclosure. Each of them is switched by one of the poles of the mains on-off switch.

PARTS LIST

FOR EACH CHANNEL

Resistors:
R1 = 1 k*
R2 = 47k5*
R3,R4,R15,R16 = 4k75*
R5,R14,R21,R32 = 22R1*
R6,R7,R12,R13 = 47R5*
R8,R11,R51,R53 = 10 k
R9,R10 = 2k2
R17 = 2k21*
R18 = 100 R*
R19,R20,R30,R31 = 221 R*
R22,R27,R49 = 15 k
R23,R24,R28,R29 = 10 R*
R25,R26,R34,R36,R38,R40,R42, R44 = 100 R
R33,R47 = 270 R
R35,R37,R39,R41,R43,R45 =0R27; 5 W;low-inductance but see text on p. 46
R46 = 8R2; 5 W
R48 = 470 R
R50 = 47 k
R52,R54,R55 = 100 k
R56 = 270 R; 1 W
R57 = 1k8
R58 = 560 k
R59 = 47 R
R60,R61 = 1 M
R62 = 4k7 (8k2 if MAT transistors are used)
R63,R64 = 2k7
P1 = 2 k, 12-turn preset for vertical mounting
* = 1% tolerance

Capacitors:
C1,C2 = 1 µF, MKT
C3 = 820 pF, polystyrene
C4,C5,C22 == 220 µF; 40 V radial
C6,C7 = 33 nF
C8,C9,C12,C13,C15 = 10 µF; 10 V
C10,C11 = 2n2
C14 = 100 pF polystyrene
C16 = 82 nF
C17 = 330 pF
C18, C19 = 10 µF; 40 V; bipolar
C20 = 15 nF
C21 = 220 µF; 10 V; radial
C23, C24 = 270 nF
C25, C26 = 47 µF; 25 V

Semiconductors:
D1,D2 = 5V6; 400 mW zener
D3,D4 = high-effeiciency LED, red, 3 mm
D5 = 1N4001
D6,D8,D9 =1N4148
D10,D11 = 15 V; 400 mW zener
T1,T2 = SSM2210 (MAT02)
T3,T4,T24 = BC550C
T5,T6 = SSM2220 (MAT03)
T7,T8 = BC560C
T9,T12 = BD140
T10 = BD139
T11 = BD679
T13,T14,T15,T16 = BD911
T17,T18,T19,T20 = BD912
T21,T22,T23 = BC556B
T25 = BC546B
T26 = BC880
IC1 = LF411

Miscellaneous:
L1 = 1 µH air-cored (see text on p. 45)
Re1 = PCB relay, 24 V, 1 make contact (10 A)
9 ceramic insulating washers for TO220 cases
9 M3-size insulating washers
2 Heat sinks for T9, T10
2 Heat sinks for T4, T8
Heat sink <0.7 K/W, e.g. Fisher SK-85-75-SA

FOR EACH POWER SUPPLY
Transformer 2×25 V, 4.5 A, e.g. ILPType 61016 (if 1 supply for 2 channels, 2×25 V, 6 A, e.g. ILP Type 71016)
4 electrolytic capacitors, 10,000 µF, 50 V radial (if 1 supply for 2 channels, 6×10,000 µF, 50 V)
Mains input socket with integral fuse holder
fuse 2 A slow (mono); 4 A slow (stereo)
Bridge rectifier 50 V, 10 A
Mains on-off switch, 6 A, 2-pole
Phono sockets as required
Phono plugs as required
2-unit high 19-inch enclosure

WorldRadioHistory

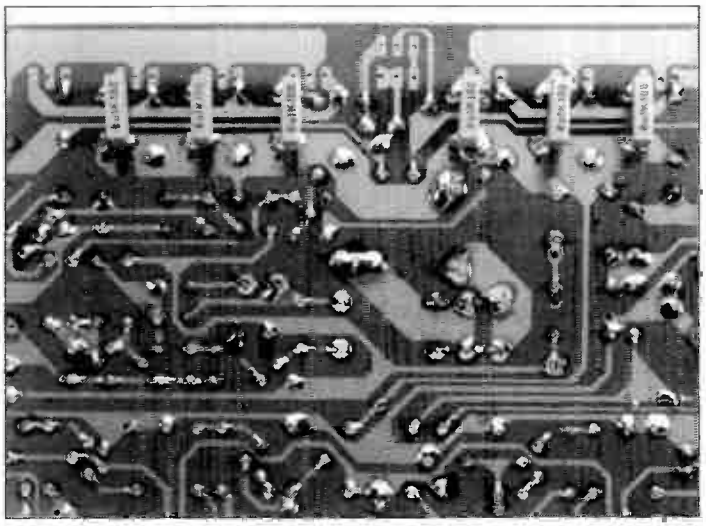

Fig. 7. If low-inductance resistors are difficult to obtain, standard 5-watt resistors, shunted by 100 nF capacitors, may be used. The capacitors are fitted at the underside of the board as shown. Holes for them are provided.

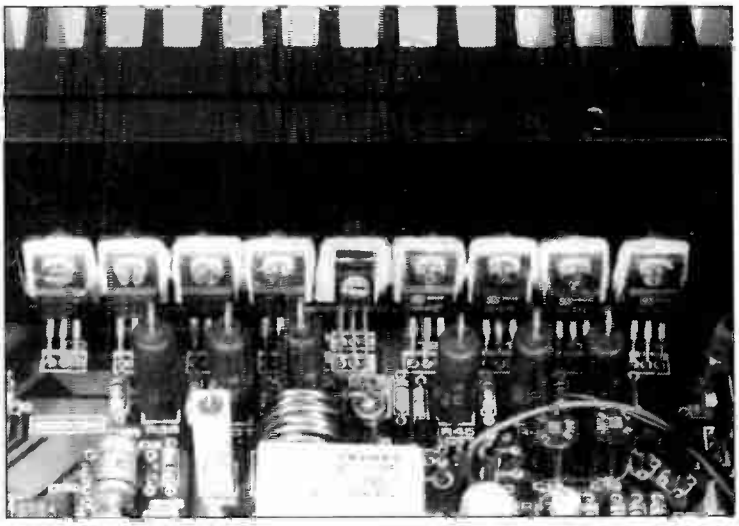

Fig. 8. The terminals of the driver, output and 'zener' transistors are bent as shown to make the devices protrude slightly from the board.

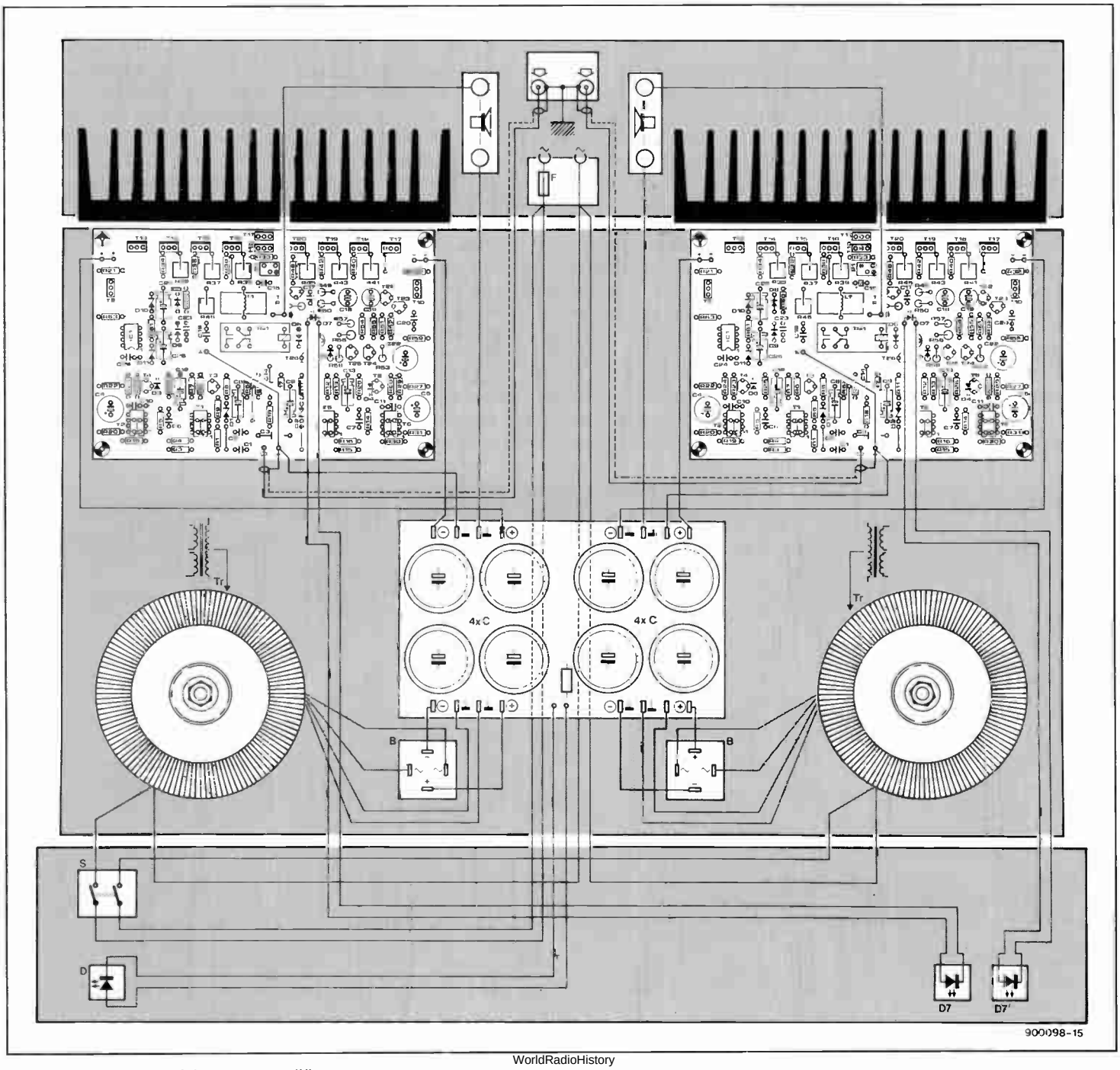

WorldRadioHistory

Fig. 9. Wiring diagram of the stereo amplifier.

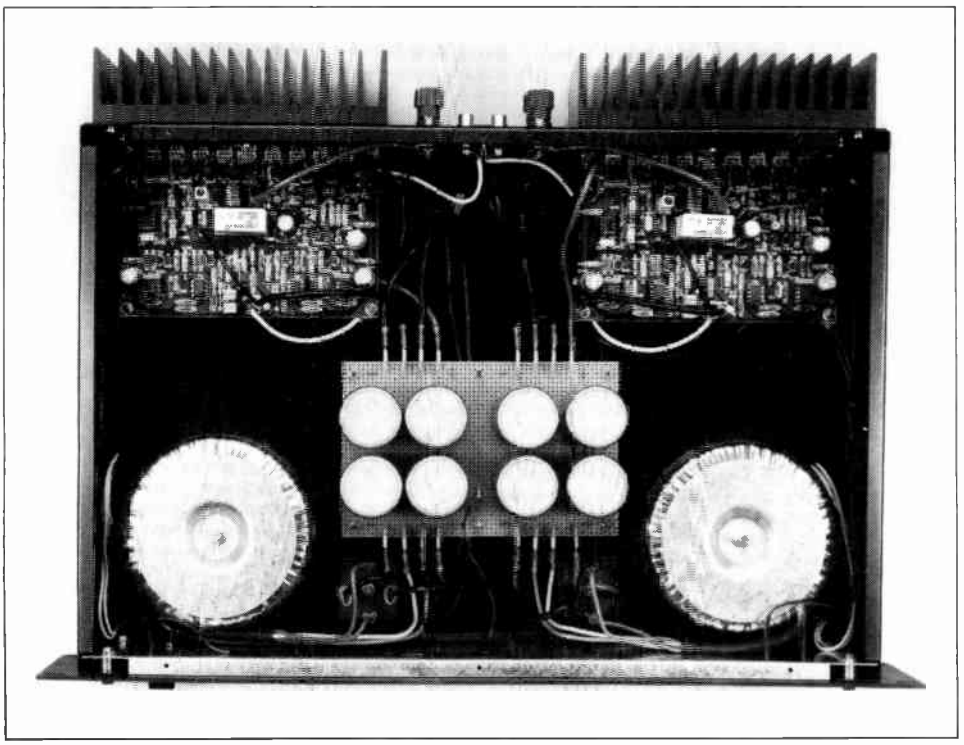

Fig. 10. Inside view of a completed prototype of the stereo amplifier.

The electrolytic capacitors are mounted together on a piece of prototyping board; interconnections are made in heavy-duty copper wire at the underside of the board. It is, of course, also possible to use standard types of electrolytic capacitor and fit these in the enclosure with the aid of clips.

The wiring diagram in Fig. 9 shows that the stereo amplifier consists of two virtually separate mono amplifiers, which makes the construction of a mono amplifier very simple. The earths of the two sections are interlinked and connected to the enclosure only at the phono sockets.

The inputs of the boards must be connected to the phono sockets by good-quality screened cable, the screen of which may be soldered to earth at both ends. Do not use cheap cable here since the capacitance of that may adversely affect the *RC* network at the input of the amplifier.

The inside of the completed prototype is shown in Fig. 10.

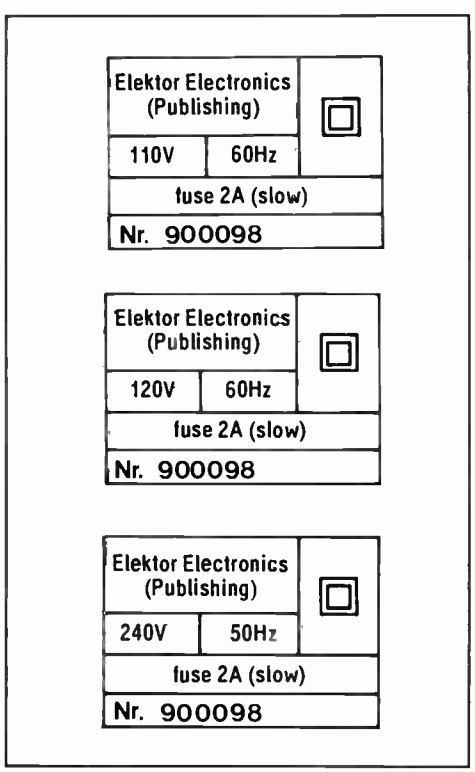

Fig. 11. Suggested labels for affixing at the rear of the amplifier unit.

Calibration and operation

Before switching on the amplifier for the first time, it is advisable to check a few points.

Remove the power lines from the amplifier boards and switch on the mains. Measure the potential across the electrolytic capacitors, which should be between ±32 V and ±38 V. Switch off the mains and discharge the capacitors via a 1 kΩ resistor. Reconnect the power lines.

Set P1 on both boards to maximum resistance and check with an ohmmeter that this is really maximum. This check prevents a large quiescent current flowing immediately after switch-on.

If you are not fully confident that everything is all right, before you switch on the mains again, temporarily insert a 15 Ω, 5 watt resistor in series with each of the supply rails; this will prevent the current rising above 2 A. If the output stages appear to function normally and no components are getting unduly hot, these resistors may be removed after the mains has been switched off (but see below).

Switch on the mains again and measure the potential across one of the emitter resistors of the output transistors. If necessary, adjust P1 to get a drop of 9 mV across the resistor: this is equivalent to a quiescent current of 100 mA. If you do not possess a suitable millivoltmeter, leave the 15 Ω resistors in the power lines and measure the potential across them: this should be 2 V for a quiescent current of 100 mA.

A number of test points are given in the circuit diagram in Fig. 2: values measured there should be about the values shown in the oval boxes.

For peace of mind, check the base voltages of T9 and T10 (which should preferably be a matched pair) and the potentials across their emitter resistors R21 and R32. These should be ikdentical, or nearly so.

Furthermore, the direct voltage at the output of IC1 (pin 6) should be smaller than 10 V. If that is not so, the value of R62 should be reduced to the next lower preferred value in the E-series.

Operation of the amplifier is straightforward. The design allows it to be operated continuously over very long periods with an 8- or 4-ohm load. Continuous loading into 2 Ω is n ot advisable for more than a few minutes, however (the rating of the heat sinks does not allow that).

The power supply allows a music output of close to 200 W into a 2 Ω load. ■

SOME USEFUL SOURCES

Chassis, Kits
Sescom, Inc.
2100 Ward Dr., (Dept. EE)
Henderson, NV 89015, (800) 634-3457

Crossovers, Preamps
Ace Audio Co.,
532-5th St., (Dept. EE)
East Northport, NY 11731-2399

Quality Parts
Welbourne Labs
3333 S. Wadsworth Blvd., B-104, (Dept. EE)
Lakewood, CO 80227

Equalizers, Instruments
Audio Control
22313 70th Ave. West, (Dept. EE)
Mountlake Terrace, WA 98043, (206) 775-8461

Preamp, Amplifier Kits
Marchand Electronics
1334 Robin Hood Ln., (Dept. EE)
Webster, NY 14580, (716) 872-5578

CD Player Mods, Power Filters
Euphonic Technology
19 Danbury Rd., (Dept. EE)
Ridgefield, CT 06877, (203) 431-6434

Kits, Instruments
Heath Company
(Dept. EE)
Benton Harbor, MI 49022
(800) 44-HEATH for catalog

Preamps, Power Amps and Digital Parts
Curcio Audio Engineering
PO Box 8003, (Dept. EE)
State College, PA 16803, (814) 234-0752

Tube Amps, Preamps
GSI Musical Electronics
633 Franklin Ave., Suite 244, (Dept. EE)
Nutley, NJ 07110, (201) 680-1905

Parts, Supplies, Software
Old Colony Sound Lab
PO Box 243, (Dept. EE)
Peterborough, NH 03458, (603) 924-6371/6526

Audio Kits
Mark V Electronics
8019 E. Slauson Ave., (Dept. EE)
Montebello, CA 90640, (213) 888-8988

Surplus Parts and Instruments
Fair Radio Sales
1016 Eureka, Box 1105, (Dept. EE)
Lima, OH 45802, (419) 227-6573

Transformers
Toroid Corporation of Maryland
6000 Laurel-Bowie Rd., (Dept. EE)
Bowie, MD 20715, (301) 464-2100

Transformers, Toroidal
Avel-Lindberg, Inc.
5 Old Town Park Rd., Unit 47, (Dept. EE)
New Milford, CT 06776, (203) 355-4711

Audio Radio History

ACTIVE MINI SUBWOOFER - PART 1

by T. Giffard

There are many people who cannot, or will not, have the large loudspeakers in their living room that are necessary for good reproduction of music, and therefore use smaller models. Although many of these nowadays perform very well, they fall short of good reproduction of bass frequencies. The active subwoofer described in this article enables that deficiency to be eliminated.

IT is a basic fact of nature that the faithful reproduction of bass frequencies by a loudspeaker requires the displacement of a large volume of air. That in turn requires the cone of the drive unit to have a large area and a large linear movement. Since a drive unit in a box displaces large volumes of air at frequencies below the lower –3 dB cut-off point, which is, of course, very inefficient, it is necessary for good efficiency to design the enclosure in a way that ensures that the cut-off point lies well below 30 Hz.

These requirements are difficult to combine if the dimensions of the box are to be kept small. As often in life, it is therefore necessary to arrive at a compromise. However, if it is assumed that the user of the subwoofer is not going to need hundreds of watts of power output, that compromise works out very well.

Choice of drive unit

The subwoofer uses the new Type 10V516 drive unit from the French manufacturer Focal—see Fig. 1. This is a 25-cm unit with a fairly heavy, stiff cone, which consists of a paper carrier on to which a layer of polyglass, a mixture of tiny glass pellets and resin, has been deposited.

The unusually long (23 mm) speech coil can move linearly over a distance of 12 mm peak-to-peak. The total air displacement of 394 cm^3 is exceptionally good for a 25-cm unit. The coil is wound from flatwire on a specially designed carrier.

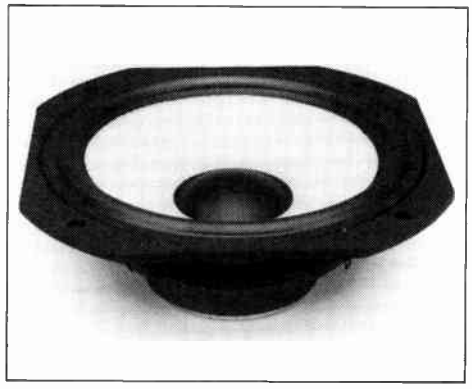

Fig. 1. The new Type 10V516 drive unit from Focal.

The Thiele-Small parameters of the unit—$f_s = 23$ Hz; $Q_{ts} = 0.42$; $V_{as} = 132$ l—make it eminently suitable for use in an enclosure with a net volume of 35 l. The –3 dB point lies around 43 Hz at a reasonable Q_{tc} of about 0.8.

Prototypes of the subwoofer had a response curve that was virtually identical with the computed one. True, the cut-off point was not as low as one would have liked, but with electronic correction it is possible to shift it to below 30 Hz without reducing the maximum attainable sound pressure too much (the greater the correction, the sooner the drive unit reaches the limit of its linear movement).

Electronic correction

In order to render the lowest tones of a compact disk or gramophone record well audible, a simple electronic network was used to straighten the lower part of the response of the subwoofer to just under 30 Hz. This network was designed originally by one of the great audio researchers, Siegfried Linkwitz, and is shown in Fig. 3 with on the opposite page the simple formulas for calculating the component values.

The wanted correction is computed on the basis of the Thiele-Small parameters. You first measure or calculate Q_{tc} and f_c of the drive unit fitted in an enclosure, choose the required new Q_{tc} and f_c and then compute

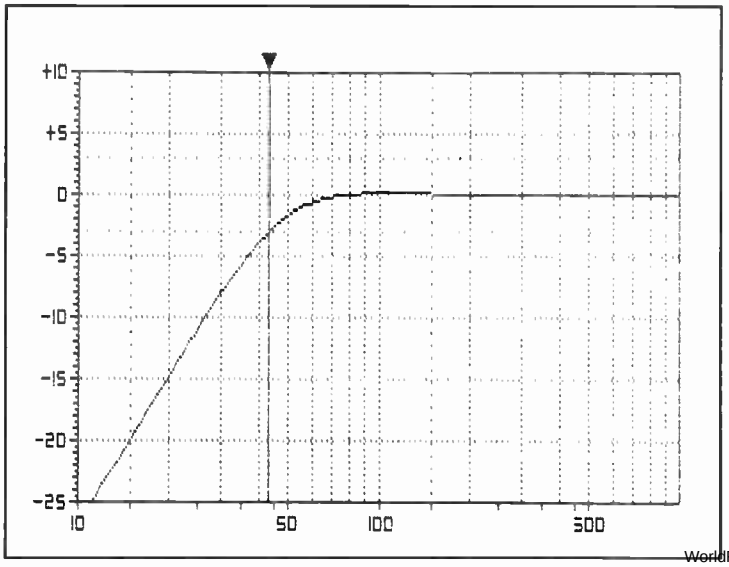

Fig. 2. Computed response curve of the 10V516 drive unit in a closed box.

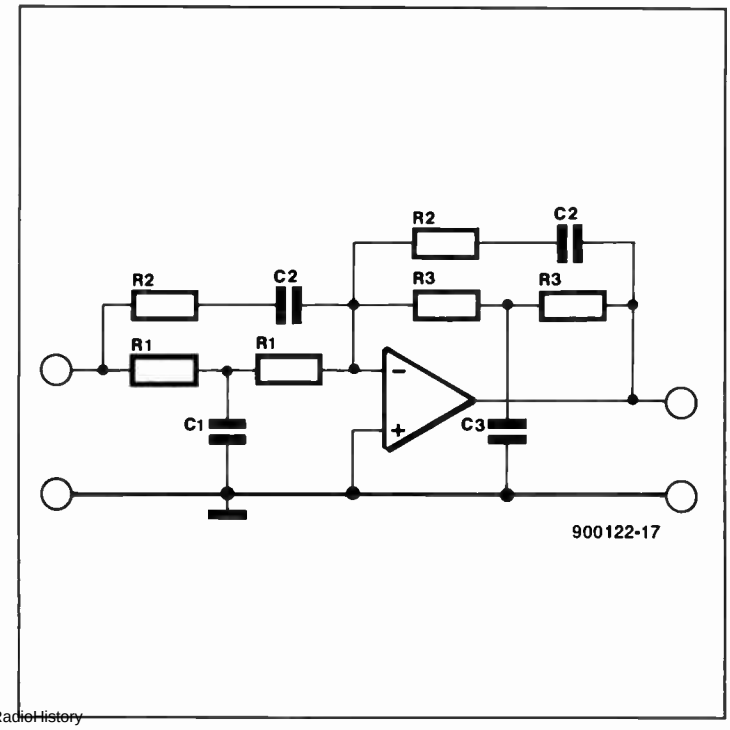

Fig. 3. The Linkwitz correction network.

WorldRadioHistory

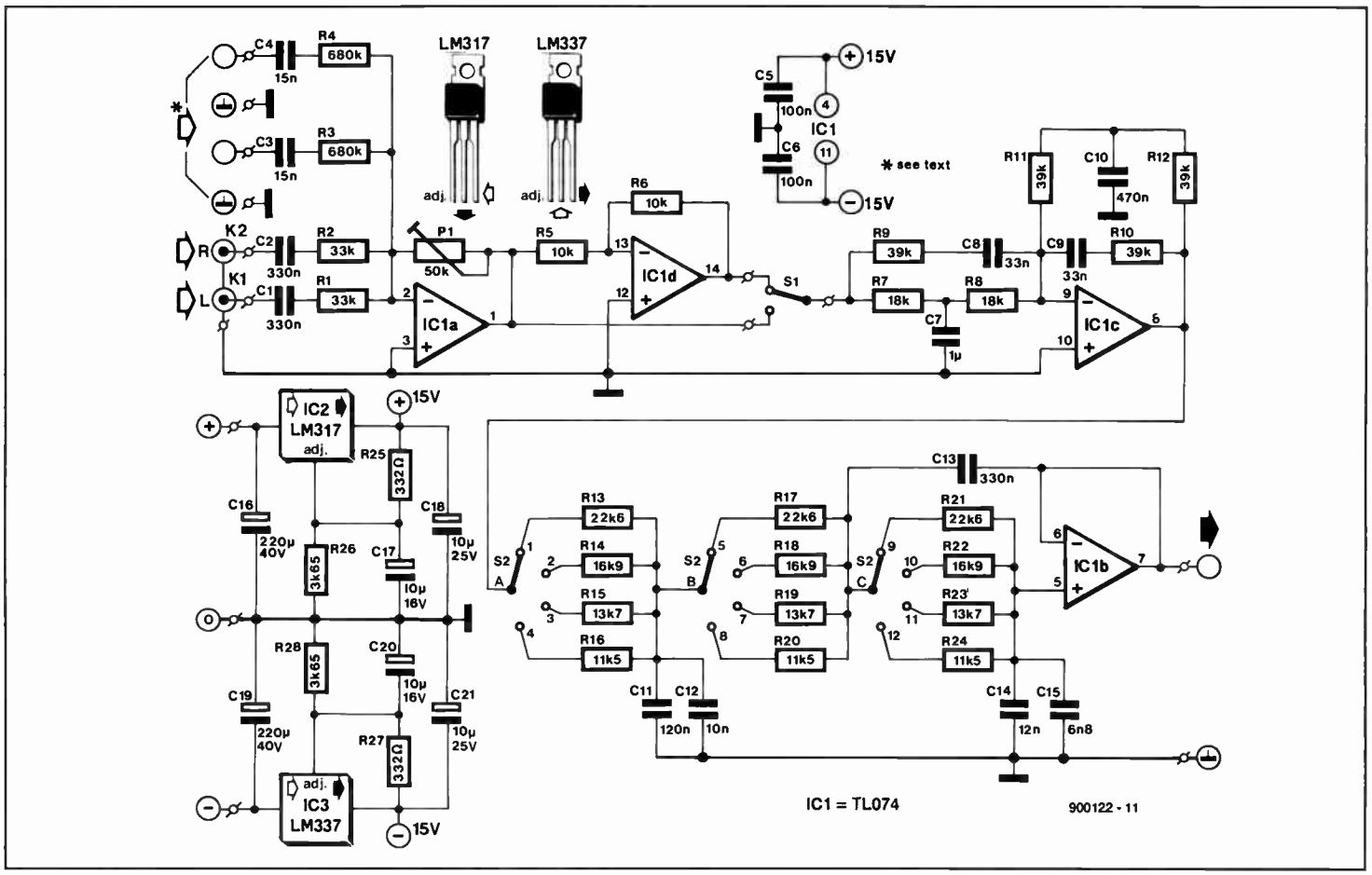

Fig. 4. Circuit diagram of the correction-filter unit.

Linkwitz correction network formulas

Required data:
Q_{tc} = quality factor of drive unit in closed box;
f_c (resonance frequency of drive unit).

Wanted new parameters:
$Q_{tc'}$ = new quality factor with correction network;
$f_{c'}$ = new resonance frequency with cor rection network.

Condition for chosen factors:

$$k = \frac{f_c / f_{c'} - Q_{tc} / Q_{tc'}}{Q_{tc} / Q_{tc'} - f_{c'} / f_c} > 0$$

where k is the pole-shifting factor.

Calculation:
Choose a value for R1 and then calculate values of other components as follows:

$$R2 = 2kR1$$

$$R3 = R1(f_c / f_{c'})^2$$

$$C1 = \frac{2Q_{tc}(1+k)}{2\pi f_c R1}$$

$$C2 = \frac{1}{4\pi f_c Q_{tc} R1(1+k)}$$

$$C3 = C_1(f_{c'} / f_c)^2$$

the component values with the formulas. It should be borne in mind that corrections must remain within certain limits, since the drive unit must be able to handle the additional large displacements. In the design as described, the maximum correction is just over 6 dB, which lowers the cut-off point by about 10 Hz.

A further point in connection with the calculation of the network is that in practice the results will be different from the theoretical overall response curve. Note, for instance, that the values of a number of components in Fig. 4 are quite different from the calculated values. This is because after calculating the values, we entered them, together with the the measured drive unit performance data, into a simulation program, on the results of which we adapted the values to obtain an optimum response curve (the components included C1 and C2).

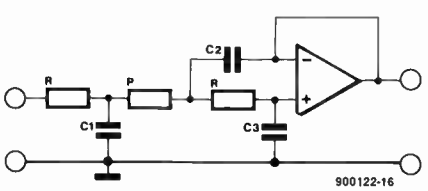

BUTTERWORTH	BESSEL
$C_1 = 0.2215 / fR$	$C_1 = 0.1572 / fR$
$C_2 = 0.5644 / fR$	$C_2 = 0.2265 / fR$
$C_3 = 0.03221 / fR$	$C_3 = 0.04039 / fR$

Table 1. Formulas for calculating the cut-off points in the third-order low-pass filter based on IC1b.

In Fig. 4, IC1a is a summing amplifier. The input signals from the left- and right-hand channels, which are at line level, enter via C1-R1 and C2=R2 respectively. Depending on the position of P1, the sum of the signals is amplified to some degree and then applied to the correction network, which is based on IC1c.

There are also two high-level inputs to which the signal from the (integrated) output amplifier may be connected. These signals are brought back to line level by R3 and R4.

Switch S1 enables selecting between the normal and inverted signal. The inverted (by IC1d) signal provides a phase-correct coupling with the existing loudspeakers).

The correction network, in combination with C1 and C2, provides a peak of just over 6 dB at 35 Hz, which results in the low -3 dB cut-off point of the subwoofer shifting down to about 28 Hz.

The correction network is followed by a third-order low-pass filter, based on IC1b, with Butterworth characteristic. Switch S2 enables the selection of four different cut-off points: 75 Hz, 100 Hz, 125 Hz and 150 Hz to enable optimum coupling between the subwoofer and the existing loudspeakers. One branch of the filter is shown in Table 1, which also gives formulas for calculating different

WorldRadioHistory

PARTS LIST

Resistors:
R1, R2 = 33 k
R3, R4 = 680 k
R5, R6 = 10 k
R7, R8 = 18 k
R9–E12 = 39 k
R13, R17, R21 = 22k6; 1%
R14, R18, R22 = 16k9; 1%
R15, R19, R23 = 13k7; 1%
R16, R20, R24 = 11k5; 1%
R25, R27 = 332 R; 1%
R26, R28 = 3k65; 1%
P1 = 50 k preset

Capacitors:
C1, C2, C13 = 330 nF
C3, C4 = 15 nF
C5, C6 = 100 nF
C7 = 1µF
C8, C9 = 33 nF
C10 = 470 nF
C11 = 120 nF
C12 = 10 nF
C14 = 12 nF
C15 = 6n8
C16, C19 = 220 µF; 40 V
C17, C20 = 10 µF; 16 V
C18, C21 = 10 µF; 25 V

Semiconductors:
IC1 = TL074
IC2 = LM317
IC3 = LM337

Miscellaneous:
S1 = toggle switch, 1 change-over
S2 = rotary switch, 3-pole, 4-position
2 phone sockets
4 banana sockets
drive unit Type 10V516
loudspeaker cabinet wadding
PCB Type 900122-1

Some useful addresses of suppliers of good quality audio equipment and components are given on page 47.

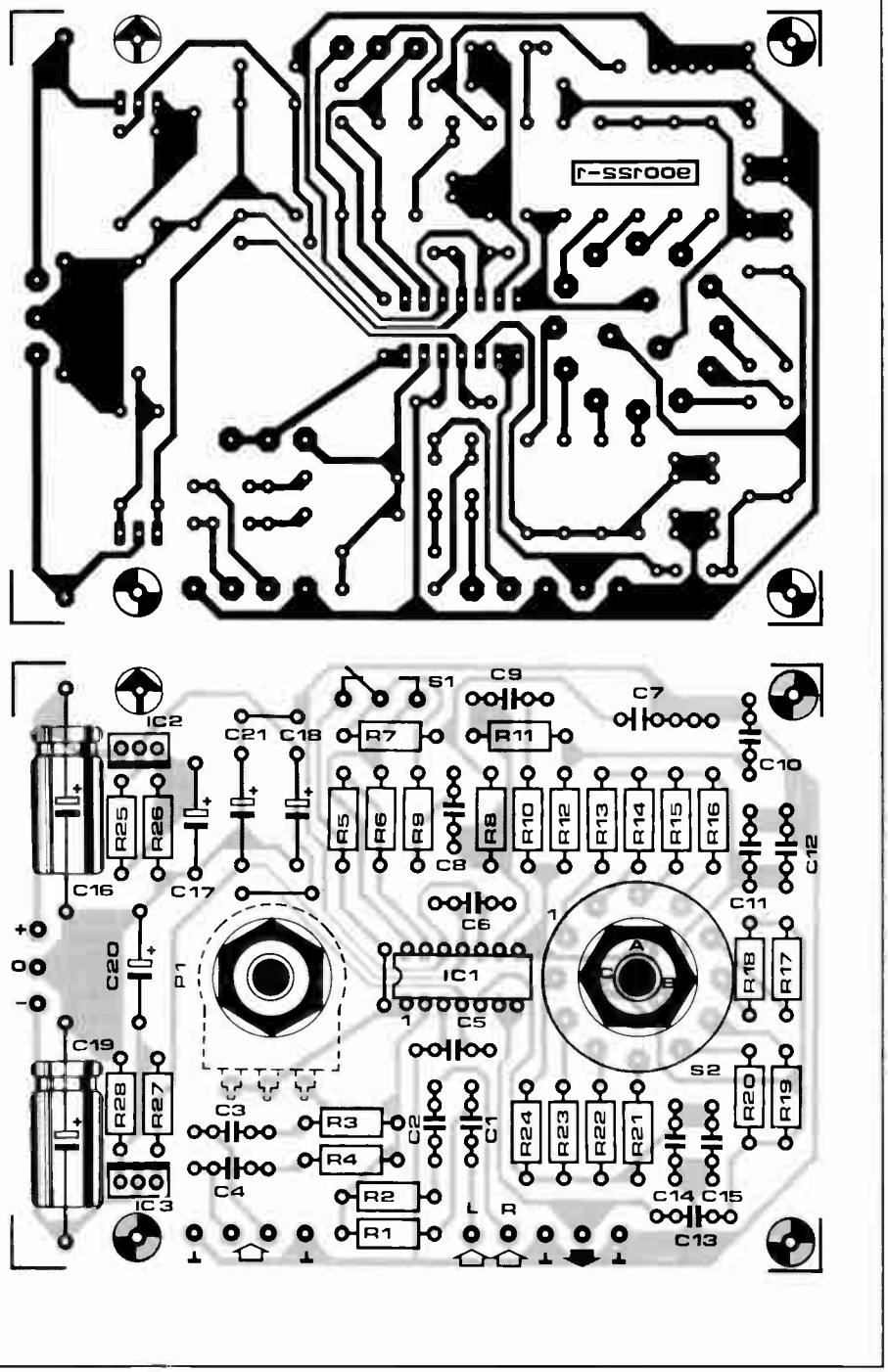

Fig. 5. Printed-circuit board for the correction-filter unit.

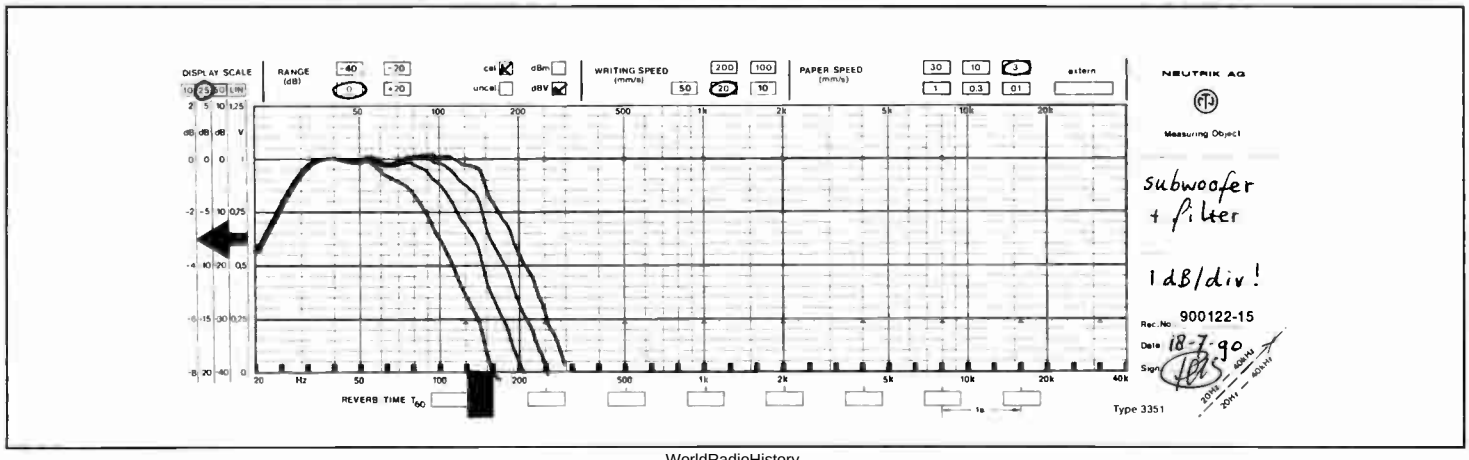

WorldRadioHistory

Fig. 6. Frequency response curve of the subwoofer at four different high cut-off points. Note that the grid here is 1 dB instead of the usual 2 dB.

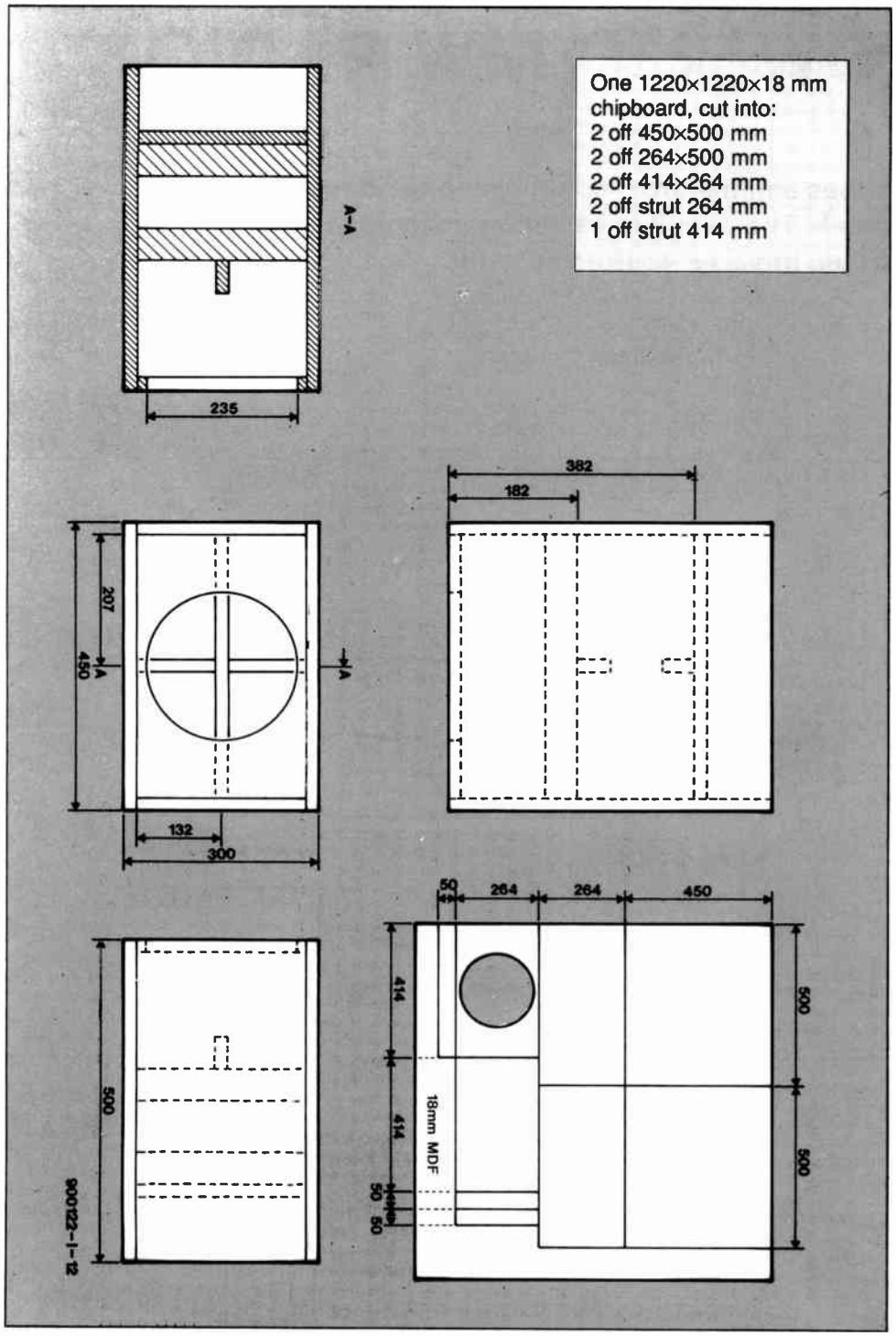
One 1220×1220×18 mm
chipboard, cut into:
2 off 450×500 mm
2 off 264×500 mm
2 off 414×264 mm
2 off strut 264 mm
1 off strut 414 mm
A-A
235
382
182
207
450
132
300
50
264
264
450
414
414
500
500
18mm MDF
50
50
500
500
500

SOLAR-POWERED MW RADIO

This article describes a miniature medium-wave band receiver powered by a solar cell. The circuit is based on a single integrated circuit, the ZN414Z from Ferranti.

M.S. Dhingra

ALTHOUGH the ZN414Z looks like an ordinary transistor in a TO-92 package (Fig. 2), the device contains quite a few things: a wide-band, three-stage amplifier with a very high input impedance, a demodulator circuit, and an automatic gain control (AGC) circuit. Its small size, high degree of integration and low power consumption make the ZN414Z eminently suited to building a miniature medium-wave band AM receiver with quite acceptable sensitivity and selectivity.

The circuit

The application circuit in Fig. 2 shows that the ZN414Z is followed by an audio amplifier, T1-T2, which raises the demodulated signal at pin 1 of the IC to a level suitable for driving a pair of headphones. The RF signal is picked up by a small ferrite rod assembly, which in the prototype was salvaged from a medium-wave transistor radio. The inductor is tuned by a 500-pF variable capacitor, C4. Since the input impedance of the ZN414Z is of the order of 4 MΩ, the tuned circuit is lightly loaded and thus ensures adequate selectivity. The value of R3 has been changed from the recommended value (cf. Fig. 1) to achieve the proper gain. Resistor R1 and diodes D1-D2 reduce the solar cell voltage to about 1.3 V for the IC. Capacitor C1 acts as a buffer device. The solar cell used is a 3-V type capable of supplying about 20 mA.

The output signal of IC1 is fed to a darlington transistor circuit, T1-T2, via coupling capacitor C2. The loudspeaker(s) connected between the collectors and the positive terminal of the solar cell should have a minimum impedance of 50 Ω. The author used a miniature 100-Ω magnetic loudspeaker as found in modern telephone sets. High-impedance headphones as supplied with the well-known Walkman® may also be used.

Construction

The circuit is so small that it is easily built on a piece of stripboard. Clearly, miniature components must be used if the receiver is to fit in, say, a matchbox. Make sure the ZN414Z is properly connected—see the pinning diagram in Fig. 2. Transistors T1-T2 can be mounted face to face. Capacitor C1 is preferably a mylar type as this is smaller than the more common polyester type. The final size of the receiver depends mainly on the size of the tuning capacitor, C4. The solar cell is simply glued on to one of the sides of the enclosure. To turn off the receiver, simply turn it over so that the solar cell lies face down, or cover the solar cell. ■

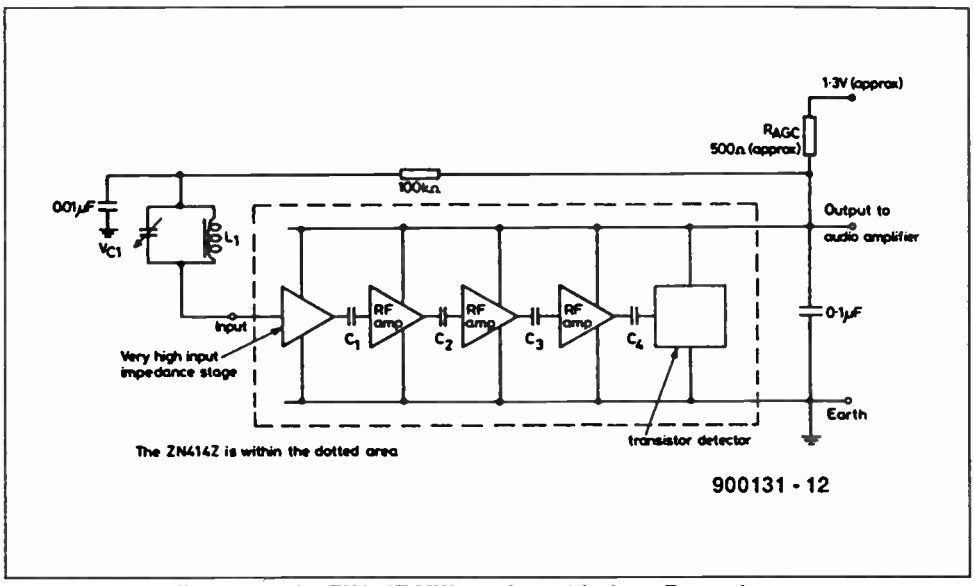

Fig. 1. Block diagram of the ZN414Z MW receiver chip from Ferranti.

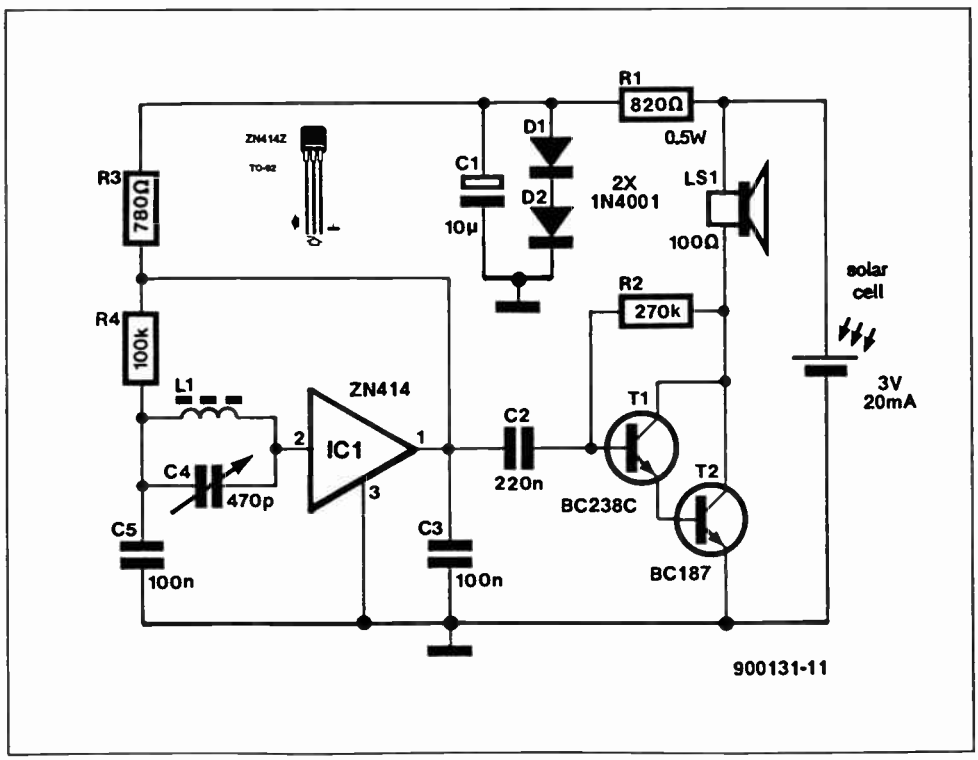

Fig. 2. Circuit diagram of the solar-powered medium-wave AM receiver.

DESIGN IDEAS

The contents of this column are based solely on information supplied by the author and do not imply practical experience by *Elektor Electronics*

1-OF-*N* DECODER

by G. Sankaran

Although 1-of-16 decoder chips are readily available, higher ratios have to be constructed from 1-of-16 types. Figure 1 shows how to build a 1-of-32 decoder from two 1-of-16 types.

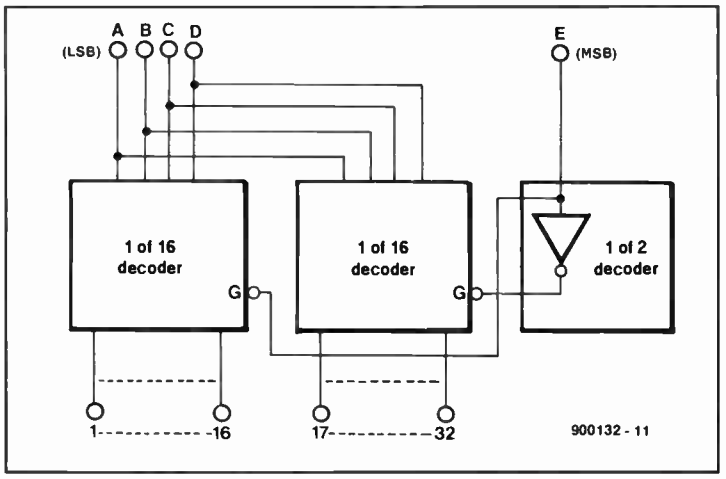

Figure 1

In a similar manner, this can be extended to any number, N, as shown in Fig. 2. Here the number of encoders is $N_2 = N / N_1$, while the output, $N = N_1 \times N_2 = 2^n$.

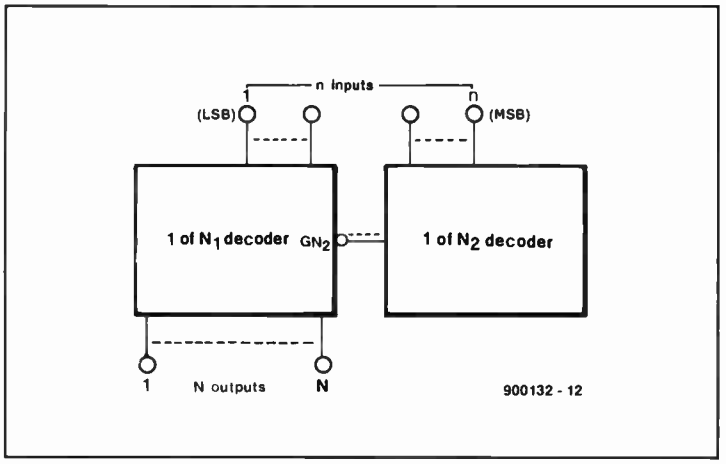

Figure 2

If, for example you want to build a 256-channel running lights unit, you will need sixteen 1-of-16 decoders, but it is also possible with just two 1-of-16 decoders as shown in Fig. 3.

A practical circuit a 32-channel running lights unit, which can also be used as a 'roulette wheel' is shown in Fig. 4. To use this as a running lights unit, jumpers K1 and K2 should be included, but not the components shown coonected by dashes lines. To use it as a 'roulette' wheel, jumpers K1 and K2 should be omitted and the components shown connected by dashes lines should be included.

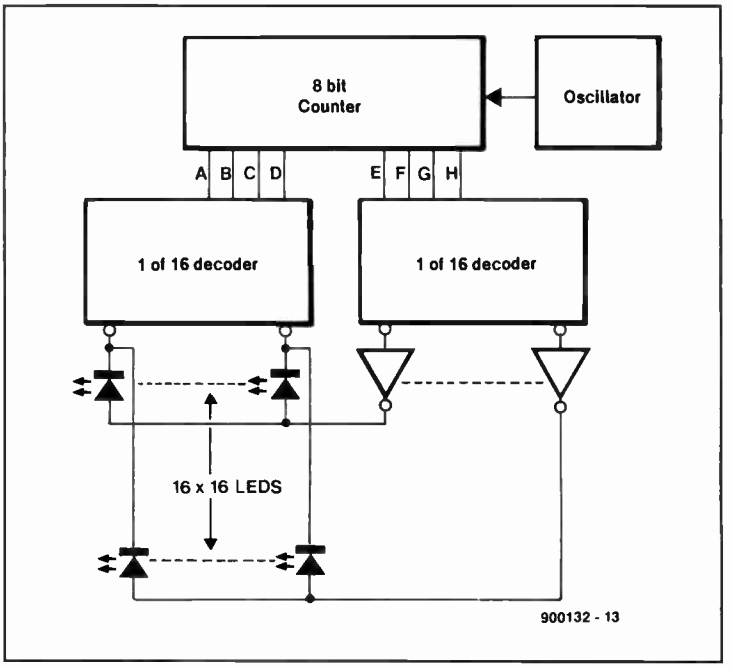

Figure 3

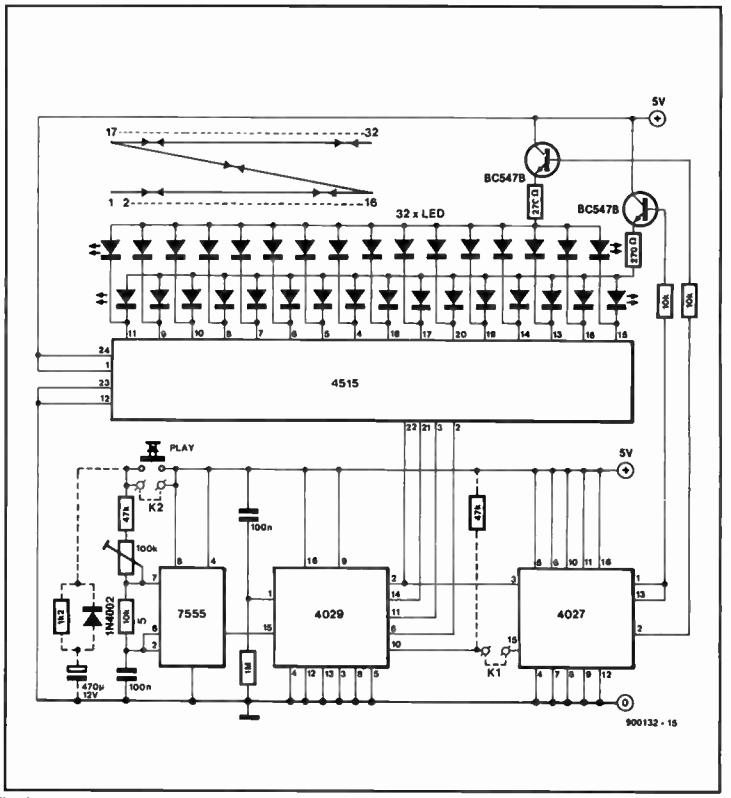

Figure 4

WorldRadioHistory

APPLICATION NOTES

The contents of this article are based on information obtained from manufacturers in the electrical and electronics industry and do not imply practical experience by *Elektor Electronics* or its consultants.

STEREO BRIDGE AMPLIFIER WITH TDA7370 (SGS-THOMSON)

Most car radio amplifier ICs designed for a supply voltage of 12 V have a maximum output power in the region of 10 watts. The production methods applied by SGS-Thomson for their TDA7370, however, allow the output power of this stereo bridge amplifier IC to be pushed very near the theoretical maximum of 22.5 watts. This level is reached at the cost of some distortion, but still without the use of a DC-to-DC step up converter.

The list of requirements that may be drawn up for car radio amplifier ICs is fairly long, and looks quite different from one that applies to an amplifier for use in, say, a hi-fi stereo set-up. The quiescent current, for one thing, should be as small as possible to avoid unnecessary draining of the car battery. Equally important is the requirement for switch-on and switch-off noises to be eliminated or suppressed to the extent that they are inaudible. Further, as most of you will be aware, the temperature conditions in a car are much more extreme than those in the living room. Hence, there is a clear requirement for a reliable temperature control circuit to take care of the protection of the amplifier IC when a thermal overload occurs as a result of a short-circuit, output overload or a too high ambient temperature.

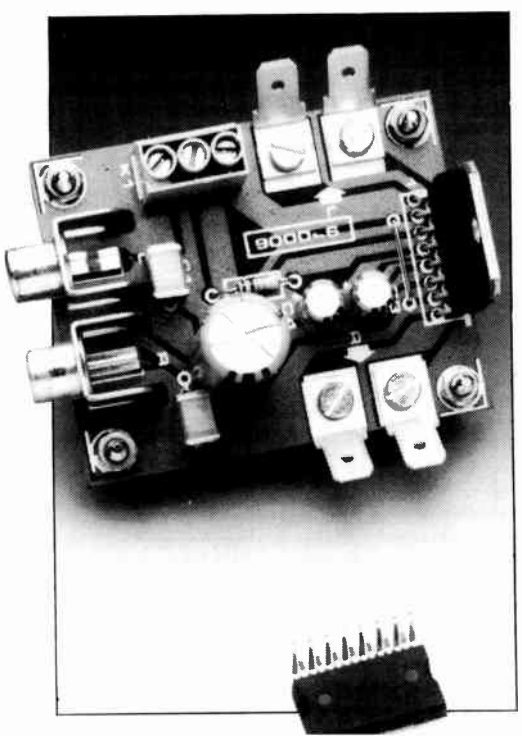

One of the most important characteristics of a car radio booster, irrespective whether built with discrete components or hybrid integrated circuits, is the saturation voltage of the power transistors. The smaller this voltage, the higher the maximum power that can be supplied to a load resistance. Assuming that the supply voltage is about 14 V, which holds true for a fully charged car battery, a single-ended power amplifier has a maximum theoretical output power of 5.6 W into 4 Ω, while 22.5 W could be supplied by a bridge amplifier. These power ratings are based on the assumption that the voltage drop across the output transistors is smaller than 0.3 V. This remarkably low value of the saturation voltage is actually achieved by the TDA7370, and compares favourably with the 1 V specification of older car amplifier ICs such as the TDA2003, TDA2004 and TDA2005, for which the respective single-ended and bridge output powers are 4.5 W and 18 W.

What's inside?

As shown in Fig. 1, the TDA7370 consists of four identical, independent, power amplifiers, a stand-by circuit, a clipping detector, and a number of protection circuits. Each of the power amplifiers has two integrated resistors which set the voltage gain to 26 dB (about 20 times). The input voltage required for full output power is about 720 mV. The gains of the amplifiers are matched to within 1 dB.

TDA 7370 MAIN SPECIFICATIONS

- four power amplifiers in one IC
- very low external component count
- no bootstrap
- stand-by mode with soft-start
- on/off noise suppression
- protected against
  - inductive loads
  - reversed supply
  - output short circuit
  - overheating
- max. supply voltage: 18 V
- max. output current: 3.5 A

The datasheet of the TDA7370 states a maximum output power of 17 W for the bridge arrangement of the four amplifiers. The distortion at this power is stated as 10%. At an output power of 10 W, the distortion drops to 0.03%, which is an excellent value for a car radio amplifier.

The stand-by circuit allows the IC to be switched on and off from a remote location with the aid of a control signal. The relevant IC pin is fitted with an external *R-C* network, and is taken to the positive supply voltage, $+U_b$, or to ground. When pin 7 is taken to $+U_b$, the four amplifiers are switched on a few seconds after applying the supply voltage. When pin 7 is not connected or taken to ground, the IC is switched to stand-by mode,

World of Radio

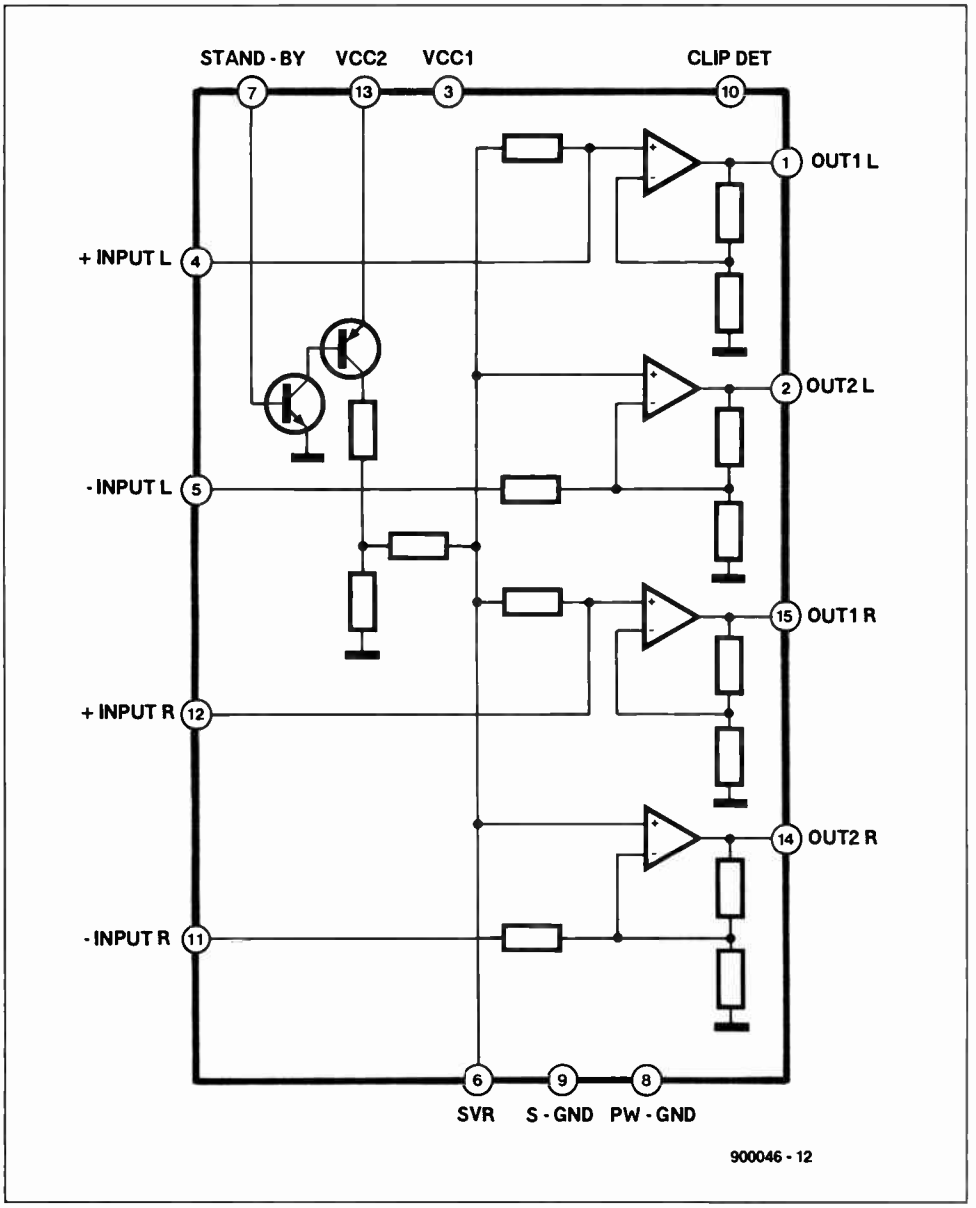

Fig. 1. Internal schematic of the TDA7370 from SGS-Thomson.

and the current consumption is reduced to about 80 mA.

The CLIP DETECT output, pin 10, supplies an output signal when one of the four amplifiers is overdriven. The detector acts on clipping in both half-cycles of the output waveform. The width of the clipping output signal corresponds to the duration of the overdrive condition.

The various short-circuit and overload protection circuits on board the TDA7370 are not shown in the circuit diagram. For the sake of completeness, the pinning of the IC is shown separately in Fig. 2.

Application circuit

The circuit diagram of a car radio booster based on the TDA7370 is shown in Fig. 3. Each loudspeaker is powered by two amplifiers in bridge configuration. In the absence of an input signal, all four outputs (pins 1 and 2, and pins 11 and 12) are at about half the supply voltage with respect to ground. This means that there is no voltage across the loudspeakers, so that electrolytic output capacitors are not required.

Capacitors C1 and C2 decouple any d.c. components in the input signals applied to the circuit. Capacitor C5 forms a buffer on the positive supply voltage rail. Network R1-C4 forms the previously discussed time constant at the STAND-BY control input of the TDA7370. All amplifiers in the chip remain off until a high level is applied to the STAND-BY terminal. When an input signal is already present while STAND-BY is made high, it will be noted that the volume rises gradually to the set level.

Construction

The printed-circuit board shown in Fig. 4 allows the metal tab of the TDA7370 to be bolted direct to a heat-sink. The completed board is best fitted into a metal enclosure made from a U-shaped and an L-shaped piece of aluminium. One side of this enclosure is formed by the heat-sink, which should be fairly large in view of the temperatures that can be expected in the car interior. The enclosure panel opposite the heat-sink is drilled to accept two phono sockets and a block of seven screw terminals, which are used to connect the loudspeakers, the supply voltage, and the stand-by control. If you do not want to use the stand-by control option, fit a wire link to connect the relevant input to the positive supply rail.

Other applications

There is, of course, no reason to limit yourself to the given application of a stereo amplifier.

BACKGROUND THEORY

The theoretical maximum output power of a car radio amplifier is simple to calculate. To begin with, the peak loudspeaker voltage,

$$U_{LS(p)} = \tfrac{1}{2}U_b - U_{CEsat}$$
$$= 7\ V - 0.3\ V = 6.7\ V$$

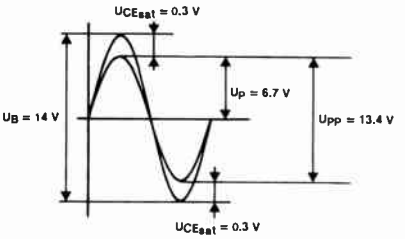

From this, the effective, or rms (root-mean square) voltage of a sine-wave is approximated by

$$U_{LS(rms)} = U_{LS(p)} / \sqrt{2}$$
$$= 6.7\ V / 1.414 = 4.7\ V$$

The maximum output power that can be supplied to a 4-Ω load,

$$P_{(max)} = U_{LS(rms)}^2 / R_{LS}$$
$$= 4.7^2 / 4 = 5.6\ W$$

For a bridge amplifier,

$$U_{LS(p)} = U_b - 2U_{CEsat}$$
$$= 14\ V - 2 \times 0.3\ V = 13.4\ V$$

$$U_{LS(rms)} = U_{LS(p)} / \sqrt{2}$$
$$= 13.4\ V / 1.414 = 9.5\ V$$

$$P_{(max)} = U_{LS(rms)}^2 / R_{LS}$$
$$= 9.5^2 / 4 = 22.5\ W$$

Assuming a battery voltage of 14.4 V, and a saturation voltage of 1 V for each power transistor, a bridge amplifier has a theoretical maximum output power of just under 20 W into 4 Ω, or nearly 40 W into 2 Ω. Unfortunately, hardly any of the currently available car radio amplifier ICs reach this theoretical limit, mainly because they are unable to supply the required maximum current.
To calculate the maximum output power at a certain supply voltage, the above calculations may be avoided and replaced by the single equation

$$P_{(max)} = U_b^2 / 8R_{LS}$$

www.elektor.com

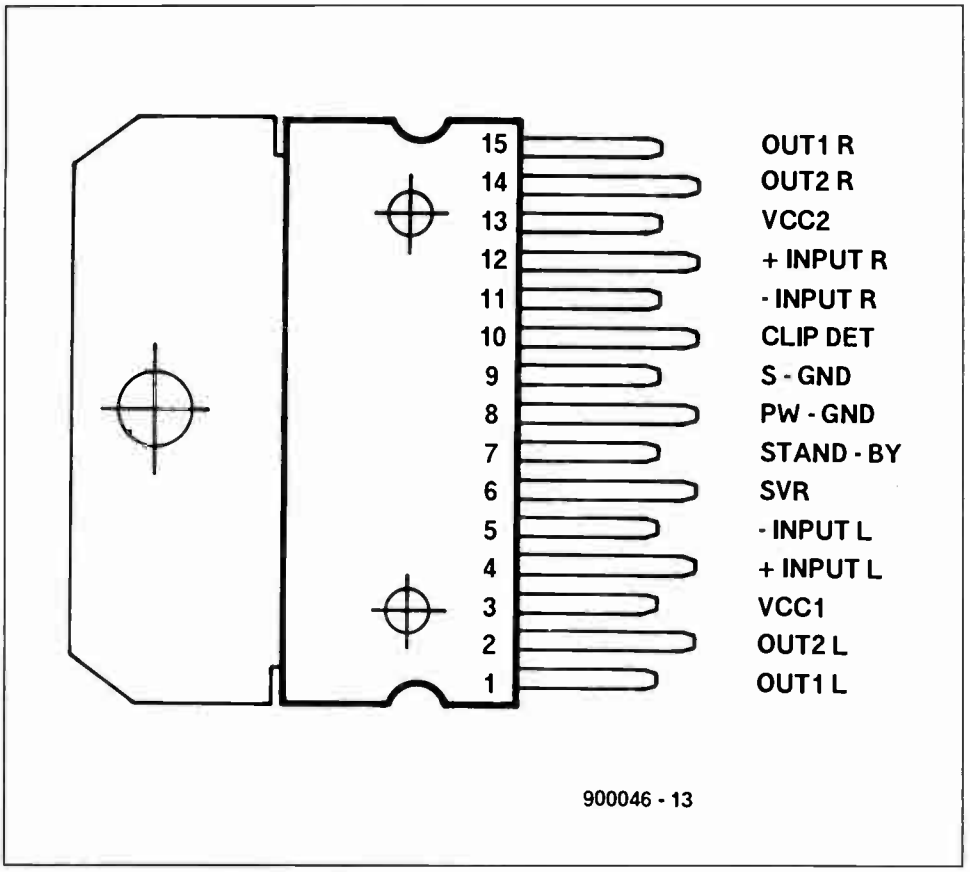

Fig. 2. Pinning of the TDA7370.

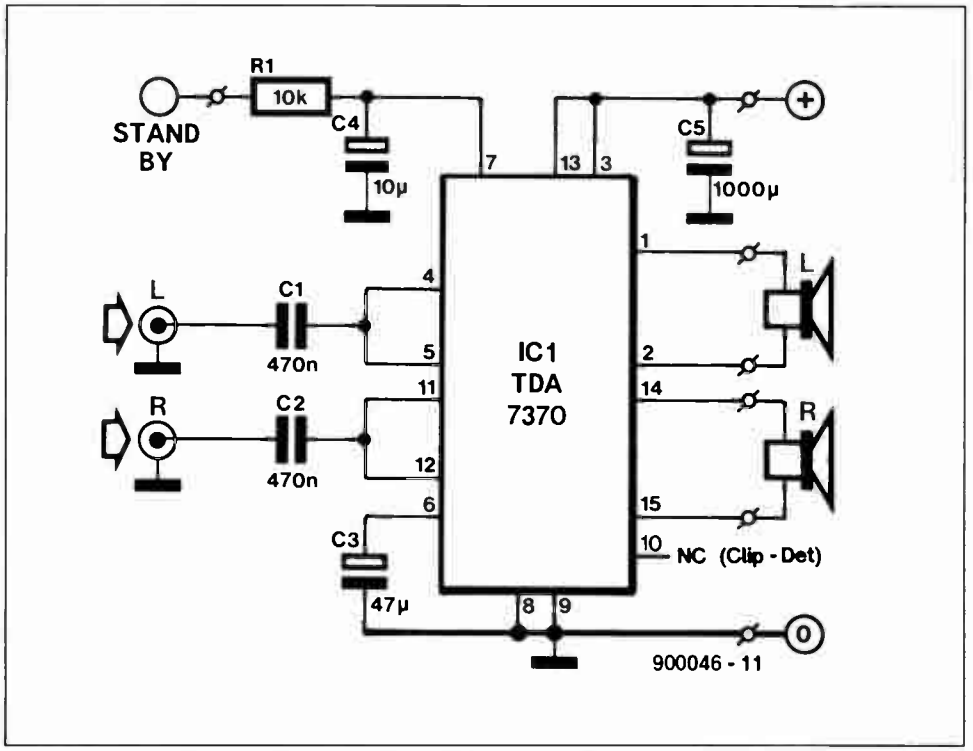

Fig. 3. Application circuit of the TDA7370 in a car radio booster.

The printed-circuit board is so small that two or more of them are easily fitted in the car. Combined with a simple filter, the amplifiers bring an active loudspeaker system in the car within easy reach.

The stand-by input on the amplifier may be used for automatic remote control when connected to the electric antenna output of the car radio.

The technical specifications of the TDA7370 give the IC a much wider application range than just in the car. Small hi-fi systems, portable public address (P.A.) equipment (megaphones), active loudspeakers and stage (monitor) loudspeakers are just a few examples of equipment where the TDA7370 can be used with advantage. ■

Note. The manufacturer of the TDA7370, SGS-Thomson, expects to start production of this device by December 1990.

SGS-Thomson Microelectronics • Planar House • Parkway • Globe Park • Marlow • Buckinghamshire. Telephone: (0628) 890800. Fax: (0628) 890391.

SGS-Thomson Microelectronics • North & South American Marketing Headquarters • 1000 East Bell Road • Phoenix, AZ 85022 • USA. Telephone: (602) 867-6100.

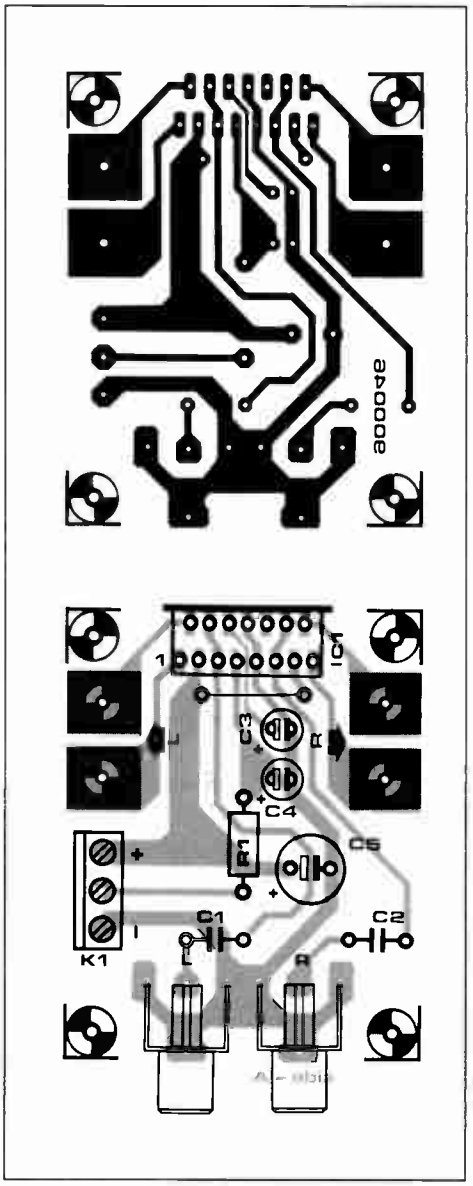

Fig. 4. Printed-circuit board for the stereo car radio amplifier based on the TDA7370.

COMPONENTS LIST

Resistors:

1	10kΩ	R1

Capacitors:

2	470nF	C1;C2
1	47µF 25V radial	C3
1	10µF 63V radial	C4
1	1000µF 35V radial	C5

Semiconductors:

1	TDA7370	IC1

Miscellaneous:

1	3-way PCB terminal block	K1
2	PCB-mount phono sockets	
4	car-type spade receptacles	
1	heat-sink 1 K/W	

IN QUEST OF A PANGRAM – PART 2

by Lee C.F. Sallows

Combinatorial explosion

At long last the program was finished and started. Roughly a million combinations had already been tested during the development period. The trouble with previous versions had been their hopelessly slow speed. Even the latest program could only test something like ten new combinations per second. This was still sluggish, but bearing in mind the hefty letter crunching involved (16×16 additions in calculating the SUMPROFILE alone, for example), I thought it probably couldn't be greatly improved upon. Vaguely I wondered how long it would take before a solution popped up. Being a greedy consumer of valuable processor-time, the program ran at nights as a low-priority 'batch-job' on the Computing Centre's VAX 11/780 machine. Every morning I would hasten to call up the job file, running my eye swiftly down the screen in search of 'EUREKA', which would precede a printed record of the magic combination of number-words. As day succeeded day without result, the question of how long it would be before all possibilities had been exhausted gradually assumed importance. It was a matter I had never given any serious attention. 10^7 cases had already been examined. Let's see, how many would there be altogether ...?

The calculation is an absurdly simple one and even now I blush to recall first seeing what the result implied. Programmatically, the ten totals in each of the sixteen ranges are cycled exactly like the 0–9 digits on the rotating number disks of the familiar tape-counter or odometer. Advancing this software counter a single step results in the next combination of totals being clicked into position, ready for the pangram test. The all-zero state will correspond to the first or lowest set of number-words: the bottom row of scale numbers in Fig. 2. Just as the mechanical counter begins at 0 and steps in turn through every number (that is, every possible digit sequence) up to the highest, so the program runs through all possible combinations up to that coinciding with the top row in Fig. 2. In effect, we are systematically examining every single histogram that can be plotted. About halfway through the process, the example shown for the near-solution totals will come up for testing. How many such graphs can be drawn in Fig. 2? The answer is clearly the same as that number displayed on our sixteen-digit odometer after stepping through all possible positions: a string of sixteen 9s (plus one for the zero position) = 10^{16}. Is there a golden vein running through the ten-deep strata? A milky nipple crowning the Gaussian breast? At a speed of ten combinations per second, to find out is going to take $10^{16}/10$ seconds. A pocket calculator soon converts this to more intelligible units.

In searching for an autogram, my computer program could only test something like ten new combinations per second. How long would it be before all possibilities were exhausted?

There seemed to be something wrong with the one I was using. Every time I worked it out, the answer was ridiculous: *31.7 million years!*

I was so unprepared for the blow contained in this revelation that initially I could hardly take it in. The whole object of turning to a computer in the first place had been to canvass huge numbers of combinations fast. Now that the truth had dawned, I began cursing my naivety in ever embarking on such a fool's errand. True, I was an electronics engineer, not a professional programmer. However, the more I contemplated the kinds of speed at which a realistic program would have to run, the more preposterous the whole computer venture appeared. Conceivably, a somewhat faster program could be written. But even checking at a rate of one million combinations per second, it would take three hundred and seventeen years to run through the ten-deep range of possibilities!

Yet, thoughts of millions of combinations per second put me in mind of *megahertz*. And megahertz brought my thoughts back to Electronics. This in turn prompted an idea, a fanciful notion, for the first few days no more than an idle phrase repeated in the head, a good title perhaps for a science-fiction story: *The Pangram Machine*.

Initially, I didn't take the thought seriously. I was disconsolate after the embarrassing failure of the computer project, and the absurd expression 'pangram machine' mocked hollowly at the back of consciousness. Yet suddenly the vague intuition began to crystallize; in a flash I saw how a central process in the program could be simulated electronically. Taking this mechanism as a starting point, I tried translating other aspects of the algorithm into hardware. It worked; it was easy. A few hours later, I was amazed and thrilled to find the broad outlines of an actual design already clear in my mind.

The Phoenix now emerging from the ashes of the Pangram Quest soared serenely to the sky, smoothly circled, swiftly swooped, and soon bore me off, a helpless prisoner in its relentless talons. For the next three months I would be pouring all my energy into the development and construction of a high-speed electronic Pangram Machine.

The Pangram Machine

How seriously should a word puzzle be taken? Though only the size of a smallish suitcase, the apparatus to emerge from three months' intense activity packed more than two thousand components on to thirteen specially designed printed-circuit cards. More than a hundred of these were integrated circuits, each containing on the average something like fifty transistors. Foresight of this complexity might have dissuaded me from starting. In the event, the completed machine turned out to involve a good deal more electronics than originally planned.

At the heart of the device is the electronic equivalent of a continuously-stepped sixteen-digit odometer: a clock-driven cascade of sixteen Johnson counters: see Fig. 3 for all that follows. The clock is a simple 1 MHz square-wave generator producing a continuous train of 10^6 pulses every second. As mentioned above, however, even checking at this rate, ten-deep ranges would take 317 years to explore. A reduction was therefore demanded, the choice of new range-length being determined primarily by the availability of standard 8-output devices. Each counter is thus a circuit with eight outputs that become actuated consecutively by successive pulses presented to its single input. Before the clock is started, a RESET button on the control panel (see photograph in Part 1 on page 57) enables all counters to be initialized or 'zeroed', meaning that all '0' out-

World Radio History

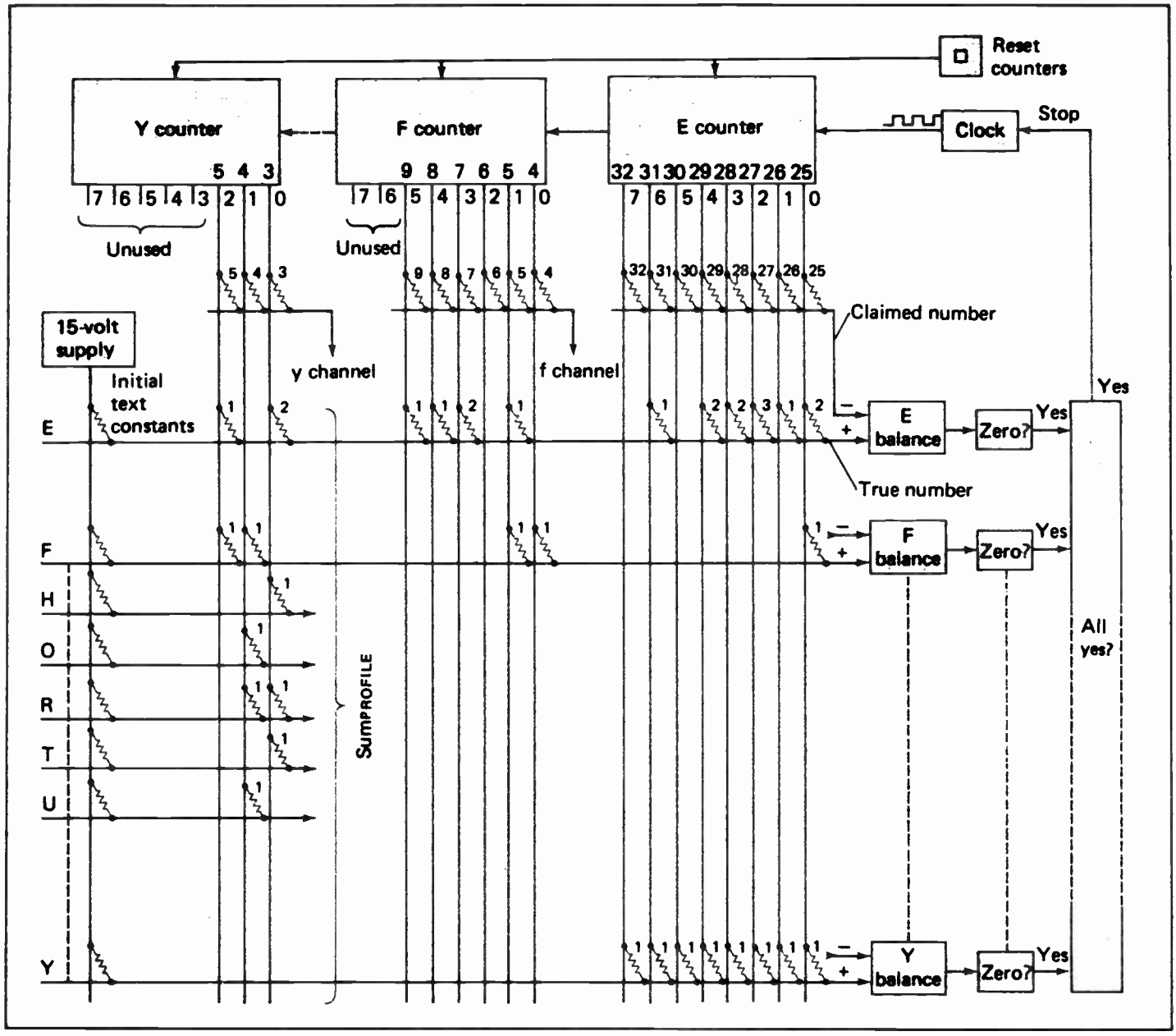

Fig. 3. The design of the Pangram Machine.

puts are made active. As the clock ticks, the actuated output of the first counter in the chain changes from '0' to '1' to '2', etc., so that after seven clock pulses output '7' will be actuated, whereupon the next pulse reactuates '0' and the process begins anew.

Coupling between counters is like between odometer disks in that, after completing one cycle, it is arranged for a single pulse to be sent to the input of the following counter in the cascade. Eight cycles of the first are thus needed to step the second counter through one. In this way, every new clock pulse results in actuating a unique combination of sixteen output lines. After 8^{16} pulses, all combinations will have been run through and, unless halted, the entire process will begin again.

Even so, calculation shows that running time must still be measured in *years* unless some further limitations are introduced. In fact, the cycle-length of counters is individually presettable. With a preset cycle-length of 5, for instance, a counter's '0' line becomes reactuated on the sixth input pulse, while outputs '5', '6' and "7' remain unused. In this way, the range-length for different letters is individually adjustable, and a shorter total running time can be achieved (at the price of narrower ranges). Figure 3 shows that the *y*-counter's cycle-length has been reduced to 3, for example. Later we shall turn our attention to the actual set of ranges used.

Now, just as in the computer program, the object of actuating different combinations of output lines is to call up sets of PROFILES whose corresponding elements will be added together so as to form a SUMPROFILE (as discussed above; I leave the initial text constants temporarily out of account). Electronically, the instantiation and addition of PROFILES may be achieved by the use of digital or analogue techniques. The former is far preferable, but costly. The analogue technique is less predictable in performance but, in this case at least, made attractive by its relative simplicity. Here, as elsewhere, financial limitations meant that design was influenced by what the junk-box had to offer. In the end, I was forced to use an analogue approach but, since other parts of the circuitry are digital (the counters, for example), the overall design is really a hybrid.

Accordingly, the PROFILES 'called up' by actuated counter outputs take the form of resistor fan-outs feeding specific patterns or profiles of discrete current levels into sixteen common lines representing the SUMPROFILE. Every counter output is associated with a predetermined number-word (shown in counter-boxes). An actuated output is one transistor connected to a 15-volt supply and thus able to deliver current; non-actuated outputs are simply left unconnected (these are so-called open-collector outputs). The

WorldRadioHistory

PROFILE of each number-word is implemented as a set of resistors connecting the counter output to appropriate SUMPROFILE lines. These are the horizontal lines *E*, *F*, ...*Y* shown in the diagram. (Sixteen 0.5 Ω resistors, not shown but electrically important, connect each of these to ground or 0 V).

Current drawn from actuated outputs thus divides into a number of resistor-adjusted streams and is distributed over the *E*, *F*, ... *Y* lines of the SUMPROFILE so as to represent the contribution of each PROFILE-number. PROFILE summing is thereby achieved almost without doing anything: the current produced in each SUMPROFILE line (and hence the voltage across its 0.5 Ω resistor) is simply the aggregate of the subcurrents injected into it via the resistors in the presently actuated set of PROFILES.

The number and value of the resistors used in each case depend entirely on the PROFILE being simulated. Choosing an arbitrary unit of current to represent one letter, double this value will stand for two, and so on. In fact, with the exception of *seventeen* which alone contains four *e*'s, values in the PROFILES are always 0, 1, 2 or 3. Since 0 is indicated by no current = no connection, all PROFILES (excepting that for *seventeen*) can be implemented by resistor sets built up from just three discrete values of resistance: $x\,\Omega$, $x/2\,\Omega$, and $x/3\,\Omega$, yielding current levels of 1, 2, and 3 units, respectively. (In reality, $x = 3920\,\Omega$, a high value relative to the 0.5 Ω resistor over which the sum voltage falls: this is important for achieving summing linearity). A concrete example is shown for the *y*-counter's *three* and *four*. The small diagonal zigzags are the resistors. The numbers printed alongside represent not their resistance but the number of current units (15 V/3920 Ω = 3.82 mA) they pass into the SUM PROFILE line: *three* = 2 *e*'s, 1 *h*, 1 *r*, 1 *t*; *four* = 1 *f*, 1 *o*, 1 *r*, 1 *u*.

So far, so good: the current entering each + input of the boxes marked BALANCE is a measure of the number of *e*'s, *f*s, etc, actually occurring in the present set of sixteen actuated number-words; every microsecond a new set is switched in . But the SUMPROFILE is incomplete without the initial text constants—themselves comprising no more than a special PROFILE and thus representable as a set of fixed-bias currents. Hence, a further array of sixteen resistors is connected permanently from the 15 V supply to each SUMPROFILE (see Fig. 3).

Now, in the program SUMPROFILE, totals (representing true letter frequencies) are compared with the labels of the PROFILES (the numbers corresponding to the number-words) to check for pangramhood. These label-numbers are simulated by an extra resistor-determined current derived from each counter output (top row of resistors). *E*-label currents are fed to the – input of the *E* BALANCE box, and so on. Comparison of SUMPROFILE and label currents takes place in the BALANCE boxes; each box is a differential amplifier whose output voltage is a fixed multiple (the amplification factor) of the difference between its two input currents (or voltages, depending on how you look at it). In this way, SUMPROFILE and label-numbers are weighed against each other in the BALANCE; only if they are equal will the output voltage be zero, or close to zero, volts. Of course, all sixteen pairs are weighed simultaneously.

The rest ought to be obvious. The 'Zero?' boxes are window detectors: circuits signalling a logic 1 ('yes') if their input voltage lies within a predetermined voltage range or 'window'. The window in this case is a narrow one (±50 mV) centred on 0 V. All window-detector outputs go to a sixteen-input AND gate. If sixteen zeros turn up together, the AND gate will fire, thereby stopping the clock, freezing the counters, and turning on an inessential but comforting EUREKA! lamp mounted on the control panel. The magic set of number-words sought will now be represented by the frozen combination of actuated outputs. In order to signal which these are, counter positions are indicated (in binary code) in the form of sixteen groups of three LEDs visibile through a red perspex front panel. When a table is used to translate LED patterns into number-words, it will remain only to double-check the result by hand and, if it is correct, ring for the champagne.

Though all very well on paper, in reality the analogue techniques used in the machine are messy. Circuit capacitance and amplifier settling times set a practical limit to the speed of operation. When the clock ticks and switches in a new set of PROFILES, electronic havoc breaks loose as overshoots, oscillations, glitches, and gremlins conspire to drive window-detectors into palsied indecision. After a while, electrons begin to simmer down and circuits settle into a new steady state. For this reason, rather than

Ranges of Number-Words

LETTER	NEAR-SOLUTION TOTAL	RANGE	RANGE LENGTH	INITIAL CONSTANT
E	27	25–32	8	7
F	6	4–9	6	2
G	3	2–7	6	2
H	5	3–8	6	2
I	11	8–14	7	4
L	2	1–4	4	1
N	20	17–23	7	10
O	14	12–17	6	11
R	6	3–8	6	2
S	28	24–30	7	21
T	21	18–24	7	7
U	3	1–6	6	1
V	6	3–8	6	2
W	10	7–13	7	5
X	4	1–6	6	1
Y	5	3–5	3	1

Fig. 4. Ranges of values of number-words as actually built into the Pangram Machine.

WorldRadioHistory

going straight to the STOP input of the clock as shown in Fig. 3, the AND gate output is actually sampled some 900 nanoseconds after clock pulse onset—that is, at the last moment of the clock cycle, only 100 ns before the next pulse arrives. This idea, among others, was due to Willie van Schaijk, without whose friendly and expert assistance the machine might never have left the ground. Using the (TTL) technology at my disposal, a clock frequency of 1 MHz was the highest I was able to achieve in these circumstances. Given more funds, it would probably not be difficult to improve on this by a factor of 10. Digital techniques bring their own problems: I am not convinced that a worthwhile gain in speed could be won for the large investment needed.

Although all 16 counters have eight outputs each, it is impossible to exploit these unrestrictedly, since to examine all possible combinations at a clock rate of 1 MHz would still take $8^{16}/10^6$ seconds = 8.9 years. Range lengths were therefore tailored to each letter so as to retain a reasonable chance of finding the pangram while bringing the running time down to about one month. Flexibility was maintained by providing printed-circuit cards with easily altered solder links allowing preadjustment of each counter's cycle length. Selection of the ranges to be used was a ticklish business, involving careful analysis of letter frequencies in number-words. Those finally settled upon may be seen in Fig. 4 (numbers under RANGE stand for number-words).

Notice that *e*, having a high frequency and being therefore less predictable than other letters, receives the maximum range length of 8. On the other hand, *y*, occurring exactly once in every number-word from *twenty* upwards but in no others, can appear only 3, 4, or 5 times in the pangram given the ranges for *e*, *n*, *s*, and *t*. This is hardly a trivial insight: were *y*'s range length increased to 4, ten days would be added to the running time. As it is, to run through the combinations generated by the ranges in Fig. 4 will take $[8\times6\times6\times6\times7\times4\times7\times6\times6\times7\times\times7\times6\times6\times7\times6\times3]/10^6$ seconds = 31.36 days. Anything longer would have been unendurable.

In the program, the PROFILE for *one* contained −1 in the *s*-position to cancel what would otherwise be an *s* too many in the initial *s*-constant. However, minus values are not resistor-representable in the machine. As may be seen in Fig. 4, there are only three letters (*l*, *u*, *x*) in whose ranges *one* occurs. To deal with these cases, after reducing the initial *s*-constant by 3, an *s* is added to the PROFILEs of number-words higher than *one* in their ranges. The range for *l* thus becomes: *one*, *two* + *s*, *three* + *s*, *four* + *s*; in other words, number-words above *one* bring their plural *s* with them. There is no reason that this couldn't be done for every number-word in every range (with corresponding reduction in the *s*-constant), but it would mean a lot of extra resistors.

Failure

After twelve weeks' concentrated effort, the machine drew near to completion. As a prototype, it had posed a host of technical problems to be faced and overcome. First, there had been a pilot phase to investigate the feasibility of an analogue implementation.

After twelve weeks' concentrated effort, the world's first pangram machine drew near to completion, and was ready for testing

How fast could the critical summing and balance circuitry perform? Despite normal pessimistic expectations, small-scale trials yielded promising results. The only way to discover whether the full-scale version would function satisfactorily would be to build it. At length the long program of design and construction culminated on the day the machine stood ready for a crucial test: would it successfully identify and halt at a magic combination?

To find out, I introduced deliberate changes in the resistor-represented initial text constants; by feeding the machine with false data about letter frequencies in the introductory text, I could trick it into halting at a prearranged pseudo-magic combination. Subtracting *o* and adding an *i* and *n* should cause it to stop at that combination of real totals represented in the previously discussed hand-produced solution: 'twenty-one', the true number of *t*'s, then replacing 'twenty-nine'. Using the 'manual clock' and 'select counter' controls to preadvance the five highest or 'most significant' counters in the odometer chain (*u*, *v*, *w*, *x*, *y*) to their appropriate totals (3, 6, 10, 4, 5), it would take only a few minutes for the faster-cycling counters to reach the remaining numbers in the magic combination. Starting the clock, I watched anxiously as the changing pattern of binary-coded LED displays reported the steady increment of counter positions.

Suddenly and soundlessly the counters locked, the EUREKA! lamp came on, and the correlation monitor confirmed 16 hits in a row. This was it; the machine had passed the acid test. With the correct text constants loaded and a few other loose ends tied up, one week later all was ready for the launching of this singular rocket on its 32-day voyage into the unexplored regions of logological space.

Lift-off came almost eight months after the publication of Rudy Kousbroek's audacious challenge. Cees Wegman, a spiritual godfather to the project who had watched sympathetically through the long months as I gracelessly declined from suave insouciance to crazed intensity, came along to perform the deed of honour. A bottle of wine was broached, and three of us sat with glasses raised as he ceremoniously clicked the starting switch to RUN (it was a fitting tableau for some quixotic latter-day Velasquez, I couldn't help musing).

The ensuing period found me hovering nervously over the machine. Among other things, there was the nagging worry of machine reliability; what guarantee was there of faultless operation over so long a period? The answer, of course, was *none*. All I could do was maintain sporadic surveillance with an oscilloscope, and halt the machine at three-day intervals to perform checks with the pseudo-magic combination. After a while the suspense became nerve-racking. Mornings were worst. On waking, the first thought in consciousness would be *has it halted?* It took nerves of iron to go patiently through the morning's ablutions before tensely descending to the living room where the machine was installed on my desk. Opening the door with great deliberation, I would quickly go in and transfix the machine with a questioning gaze. And there would be the flickering LEDs as the counters slowly switched their way through the 2.71×10^{12} combinations. One million a second for 31.366 days. It was a torturing experience. The novelty of watching the machine soon wore off and the edge of expectation blunted, but a single second's distracted attention was accompanied by the thought that another million chances had already elapsed, so perhaps NOW??? ... and my glance would be wrenched back to the twinkling array of lights. After months of frenzied activity in building the machine, this period of enfored waiting was a cruel contrast of frustrated inertia and protracted disappointment.

But it was highly conducive to thinking up means for shortening that time. Before long, I saw that by halting the machine at key points in its travel and limiting the cycle-length of certain counters through calculated intervals, redundant checks on pre-

WorldRadioHistory

NEW BOOKS

HANDBOOK OF MICROWAVE AND OPTICAL COMPONENTS

Edited by Dr. Kai Chang

Vol. 1 ISBN 0-471-61366-5, 906 pages–illustrated $74.95 (hardcover)
Vol. 2 ISBN 0-471-84365-2, 635 pages–illustrated $74.95 (hardcover)
Vol. 3 ISBN 0-471-61367-3, 616 pages–illustrated $74.95 (hardcover)

Although there are many good handbooks covering low-frequency electronics, a handbook on microwave and optical components has been difficult to find. But now there are four volumes of the *Handbook of Microwave and Optical Components*, which offer an exhaustive treatment of microwave and optical engineering principles. The fourth, *Fiber Optical Components*, was not available for review.

The handbook was edited by Dr Kai Chang, a professor in the Electrical Engineering Department of Texas A&M University; the list of contributing authors reads like a Who's Who in Microwave Engineering.

The book covers all the important components in microwave, millimeter wave, submillimeter wave, infra-red, and optical frequency spectra. The information is almost entirely practical, with theoretical discussions and mathematical treatment given only where essential. In most cases, design results are presented in graphic and tabular form.

Volume 1 deals with microwave passive and antenna components: transmission lines, filters, cavaties, surface wave acoustic devices, antennas, and others.

Volume 2 deals with microwave solid state components: molecular beam epitaxy, mixers, phase shifters, IMPATT and related transit-time devices, bipolar transistors, and monolithic ICs, field-effect transistors, and many others.

Volume 3 deals with optical components: lenses, resonators, spatial filters and Fourier optics, semiconductor lasers, solid-state laser, gas laser, and others.

Volume 4 deals with fiber optic components: waveguides and couplers, waveguide lenses, electro-optical devices, acousto-optical devices, magneto-optical devices, microwave-fiber optic links, optical detectors, and liquid crystal and display devices.

Although the handbook is aimed principally at engineers who work in microwave and optical design, as well as those in other fields who need to understand the capabilities and limitations of microwave and optical systems, the four volumes should also prove useful to electrical, electronic, and communications engineering students.

John Wiley & Sons, Inc.
605 Third Ave.
New York, NY 10158-0012
(212) 850-6000, FAX (212) 850-6088 ■

POWER OF ELECTRONICS HANDBOOK

By F.F. Mazda

ISBN 0-408-03004-6
417 pages
Price $79.95 (hardcover)

Although thirty years have elapsed since the invention of the thyristor, power electronics is still regarded as a relatively young technology. Nevertheless, in those few years it has brought about a tremendous improvement in the power-handling capabilities and switching speeds of power semiconductors. During the same period, advances in microprocessors and microcomputers have had great impact on the control strategy for power electronics.

In a single volume, Mazda has collected a vast amount of material relating to power components, circuit design, and applications. The material is provided in a practical form with theoretical information presented as formulas, whose derivation is not given. Books where such derivations may be found are given in a bibliography.

The book is divided into three parts. The first deals with power semiconductor devices, thermal design, EMC, and power semiconductor protection. The second covers static switches, AC line control, direct AC frequency converters, forced communication techniques, DC-to-DC converters and DC link frequency converters. The third describes applications of power semiconductor circuits, power supplies, electrical machine control, heating and lighting, and electromechanical applications.

Butterworth-Heinemann
80 Montvale Ave.
Stoneham, MA 02180 ■

GROUNDING AND SHIELDING IN FACILITIES

By Ralph Morrison and Warren H. Lewis

ISBN 0-47183807-1 3rd ed.
228 pages–illustrated
Price $29.95 (hardcover)

Many words in electronic/electrical engineering have meanings that have little to do with their original connotations. Ground (or earth) shield, and isolation are typical examples. Ground is defined as "a conducting connection, whether intentional or accidental, between an electrical circuit or equipment and the earth or some conducting body." Yet, it does not mean the same thing to the power engineer and the electronics engineer.

In today's world of electronics, grounding and shielding have, therefore, become a confusing issue among many engineers. In spite of their importance in controlling electrical interference and ensuring that safety requirements are met, engineers apply methods of implementing them that are often hit or miss.

Grounding and Shielding in Facilities is the first book which puts these subjects into perspective. Emphasizing field theory to explain phenomena rather than circuit theory, the book shows how grounding and shielding may be used efficiently in facilities and in adverse environments. Moreover, it solves the conflict between safety and performance in this area by carefully defining the language of power engineers. As such, it is pertinent reading for engineers and system designers.

John Wiley & Sons, Inc.
605 Third Ave.
New York, NY 10158-0012
(212) 850-6000, FAX (212) 850-6088 ■

In quest of a Pangram

dictably invalid blocks of combinations could be obviated. Temporarily truncating the *t*-counter's range to exclude *eighteen* and *nineteen*, for instance, meant that all values of *t* contained a *y* so that *y* could occur only four or five times. Testing cases for which *y* = *three* could thus be skipped during such a phase. Using dodges of this kind, I was able to slice nearly ten days off the originally estimated running time.

Meanwhile, the grains of sand—and of hope—were running out inexorably. Day succeeded day and week succeeded week with no sign of an EUREKA! Twenty-two days after launching, the machine had checked out every (undisqualified) combination of number-words within its capacity without finding the magic pangram. Since oscilloscope monitoring and a subsequent test with the modified initial text constants showed the machine to be functioning properly, I was not in any serious doubt about this negative result.

The crushing truth was that there never had been a needle in the haystack; the Quest for the Pangram had failed.

The third part of this article, reproduced by kind permission of Springer-Verlag, Heidelberg and New York, will appear in the December issue of *Elektor Electronics*.

FOR SALE

Sony 650ESDII compact disc player, (list $1,300) $650; Sony DAS703ESD outboard D/A decoder, (list $1,800) $900, both pieces are brand new, never used, includes service manuals. Mod Squad CD damper with 65 rings $15; Minvac, miniature battery operated vacuum cleaner. (608) 262-4903 (WI).

Toroidal power transformers: Avel-Lindberg #40-3021. Dual 22V 3A secondaries. Dual 115V primaries. Totally epoxy encased. Great for preamps or small power amps. Limited supply at $16. Jerry McNutt, 801 South Gay St., Auburn, AL 36830.

McIntosh MX-110 tuner preamp with owner's manual, excellent condition, $385; NAD 4150 tuner, mint condition, box, $195; Denon PRA-1100 preamp, $235; two Denon POA-4400 monoblock power amps, 150W RMS, $675 for the pair, Denon epuipment is mint condition in boxes with service manuals; TEAC 4010SL open reel recorder, mint condition, little head wear, box $165; TEAC 5300 open reel recorder, direct drive capstan, excellent condition but heads are worn, service manual, box, $185; Sony PS-LX5511 linear track turntable with Shure V15-IV LT P-mount, mint condition, good sound, box, $185; all prices include shipping. Jeff Douglass, (619) 451-2423 or 592-3246.

Cello Etude, (limited edition), retail $1,200. Best offer over $600. Don, (615) 875-7977 days.

Mission PCM 4000 CD player, excellent, $300; Shure Ultra D6000 CD player, excellent, $275; Yamaha DM01 powered speakers, like new, $110. Shipping included. John Golden, 17270 Jeanette, Southfield, MI 48075, (313) 569-1039.

Horns from JBL's best studio monitor (4435). Dynamic and efficient. Two 2344 horns, two 2425 titanium drivers, dual-mono styrene crossover/equalizer, $450. Make your DH-220/200 dual/mono: DH-220 case, transformer, caps, etc. (lacks driver cards, heatsink assembly), $100; two mil-spec, regulated ± 12V Ampex power supplies, $20. Wanted: DH-280. (505) 783-4551.

Dahlquist DQ-10 speakers (modified), $600; Dahlquist crossover and subwoofer, $400; PS Audio preamp, Marsh & Leach pre-preamps, $50 each; Dynaco 416 amp (needs work), $100; Dynaco PAS-3X, AF-6 (as is), $50; 2 B&O tape recorders (as is), shipping cost only. Don McIntosh, 2 Cabot Ct., Guelph, Ontario, Canada NEG 3E4, (519) 821-7804.

Thorens TD-165 turntable $45; SME 3009 type II tonearm, new in box, never used $65. Reed Hurley, 110 Country Place Dr., Stockbridge, GA 30281, (404) 474-6594.

CLASSIFIED

AD712BQ, $6/ea; National LF353, 10/$5, LM317MP, 10/$5; Burr-Brown PCM 56PJ, $10/ea, PCM 53KPI, $10 ea, PCM 58PK, PCM 64PK 18-bit, $15/ea; I-C databooks $2-5/ea; Heath I-M analyzer, $40; Ballantine AC VTVM, $30; dbx 122, $70; Fisher 100c FM stereo tuner, $75; RCA tube manual, $20; *Radiotron Designer's Handbook* 4th edition, $50. Rene, (802) 457-2821 eves/weekends EDT.

Heathkit IO-4550 10MHz dual-trace laboratory-grade oscilloscope aligned at Heath Center plus IG-4505 accurate crystal-controlled oscilloscope calibrator. All cords and manuals used once. Highest offer. Al Haushamer, 1771 S.E. Westmoreland Blvd., Port St. Lucie, FL 34952, (407) 335-8404.

Webcor Regent IV stereo open-reel recorder, tubed, 1964. Semi-portable, 3¾–7½ ips, internal speakers, speaker outputs and impedance converter details (tube to transistor), works fine, good for experimentation, with carrying case/cabinet, $40. Keith Richardson, 1025 15th S.E., Mason City, IA 50401, (515) 424-1927.

Leach preamp, Gately Parametric, Old Colony electronic crossover, SWTPC 207A, have 4, transmission line cabinets for 10", free; *Audio* magazine 1973 to 1979 complete, plus others, $100 all; Old Colony regulated power supply, Morrey buffer, offers on all, want to sell. Matt, (402) 488-5947, or 475-4060.

Tubes: American made, Mil.spec. equivalents; 6AN8, 6DJ8, 6FQ7, 6HB5,6SL7, 6SN7,12AT7, 12AU7, 12AX7, 12BH7, more. Many power tubes. Sell or swap. Most have been preconditioned before testing. Can provide matched units. Call or send SASE. Dennis Boyle, 2401 S. Ervay, Studio 103, Dallas, TX 75215, (214) 428-3901.

Upgraded Daniel preamp, cabinet, $475; pair Borbely DC-100 amps with 500VA toroidals, cabinets, $790; Crown IC-150 preamp, excellent, $125; POOGE'd Sony CD-910 player, all *AA* mods and more, superior to CD-650, both manuals, $425; Capacitors, polycarbonate, hermetically sealed, 2μF, 200V new, $100 per 100; pair RTR ESR15 electrostatic speakers in cabinets, mint, $595; pair Sanders electrostatic panels, transformers, $325. All FOB California. Dick, (805) 526-7066.

New toroidal transformers: two 20V secondaries @ 5A (40Vct, 200VA), $20 each plus shipping. Two transformers can be wired together for an 80Vct @ 10A (800VA) transformer giving a rectified voltage of ± 62.5V. Paul Kelly 7624 Harcourt Dr., Ft. Wayne, IN 46835, (219) 485-4641.

KT-917 FM tuner with pulse count detector 3-position IF bandwidth switch (wide normal narrow), 3 meters-signal strength, center tuning, multipath/deviation, new condition, $400, plus shipping. F.L. Johnson, 702 W. Gruenwald Ave., Oshkosh, WI 54901, (414) 233-5989.

Altec A7 theater speakers, pair, 921 woofers, 808 tweeters, 511B horns, 1KH7 crossovers, all drivers and crossovers rebuilt, woofer cases solid, need cosmetics. Will deliver southern California. $1,500 for all. Lee Hutchison, (805) 946-2109.

Mac C-28, $275; Nad 4020A tuner, $30; one power and output transformer for Dyna MK II, $10 for pair; Amber series 70 amp, $200; like to trade any items for Bedini 25/25, Pioneer Series 20 amp, or other Class A SS amp. Have other epuipment to trade. Tom, (512) 826-1709.

Adcom GFA-545 100W/channel amp, $250; Nikko Beta-40 preamp, $150; Sansui TU-717 tuner, $125; TAS #23-65, $95. Shipping included. Scott, (201) 542-3382 after 6 p.m. EST.

Marantz Model 5, $200; Citation 1,2,3, all $400; vacuum tube amps, preamps, receivers, tuners, over 40 different. Plus transformers, big caps, tube sockets, books, more. SASE for list. D.G. Danner, Route 2, Box 219, Pierce City, MO 65723.

6 Toscanini CDs, $6 each. Denon DP-2550 turntable with SME 3990-III arm: Shure V15 cartridge, $450; Yamaha DSP-1 sound field processor, $495; dbx 124 4-channel dbx-II processor, $150; Nakamichi 700-II 3 head cassette recorder, $495; used BASF C-90 chrome cassettes, $10/dozen. Darroch, 1807 ElmCrest, Arlington, TX 76012.

Rogers JR-149, $300; Onkyo T-4055 FM tuner, $75; Acoustat Spectra 22 oak, extra black covers, mint $1,000; Audio Control octave, mint, $100; tweeters: MDT-32 $100/pr; Techniques 5HH10, $55/pr; Yamaha SR-50 surround processor, mint $175; Bogen C-100B PA amps, excellent, $125 (cost $300); Tektronics tube scope, $150 (heavy, pick up). Steve, 7–10 p.m. (203) 397-3888 CT.

2 pairs of circuit boards with a constant current differential amp first stage with a cathode coupled phase inverter second stage. Tim Scott, 1145 Ash #B, Arroyo Grande, CA 93420, (805) 481-2569 evenings.

Pioneer CT4 cassette deck, $50; Knight StarRoam S.W., $75; Zenith transoceanic S.W., $100; EMI SS speakers $40; B+W audio generator, $25; Million RF generator, $25; Gate attenuator pad, $40; NAD 7020 receiver, $100; Yamaha R900 receiver no outputs great tuner preamp, $50; Heathkit AJ43c tuner, $20; AJ30 tuner $30; Mcintosh C26, $300; MR67, $300; MR74, $350; MA5100, $300; Dynaco St-120, $75; FMS, $75; EICO ST97 tuner, $75; ST-70 intamp, $100; (two) HF12 mono int., $20 ea; HF90 mono FM, $20; Fisher 400 receiver, $95; Paco SA40 int amp, $50. You pay freight. Clayton Vedder, PO Box 2823, Durango, CO 81302, (303) 247-2969.

CLASSIFIED ORDER FORM

PLEASE FILL OUT IN CLEAR BLOCK LETTERS OR TYPE. PLEASE SPELL OUT ENTIRE WORD.

1	2	3	4	5	6	7	8	9	10
11	12	13	14	15	16	17	18	19	20
21	22	23	24	25	26	27	28	29	30
31	32	33	34	35	36	37	38	39	40
41	42	43	44	45	46	47	48	49	50

☐ Private For Sale ☐ Private Wanted ☐ Trade If Trade please indicate # of insertions. _____

Private ads are on a one time insertion basis. Must be resubmitted for renewal. Ads cannot be taken over the phone.

Definition of a word: A series of letters with a space before and after. Please remember to include your name, address and telephone number when making calculations. In order for Private For Sale and Want ads to be ***free*** you must be a current subscriber. *Ten dollar minimum charge for charge card orders and Trade ads.*

Any words over 50, 20¢ per word; Trade ads please charge at 70¢ per word and indicate number of insertions. Deduct 10% for a 6x contract; deduct 15% for a 11x (year) contract in *Elektor Electronics USA*. Payment *must* accompany first ad.

Please charge to my MasterCard/Visa:

CARD NUMBER EXP. DATE

SIGNATURE

☐ Check/Money Order enclosed

NAME

COMPANY

STREET ADDRESS

CITY STATE ZIP

WorldRadioHistory

Mail or FAX (603) 924-9467; *Elektor Electronics USA*, PO Box 876, Peterborough, NH 03458-0876

READERS SERVICES

All orders, except for subscriptions, should be sent to Old Colony Sound Lab: by mail to PO Box 243, Peterborough NH 03458-0243; Visa/MasterCard charge orders by FAX to (603) 924-9467 (24 hours) or by voice 8–4 weekdays to (603) 924-6526 or 6371. Please use the form opposite for all orders. All prices are postpaid to customers in the fifty states except for books. Please add $1.75 for the first book and 50¢ for each additional book ordered. Canadians please add $4.50 US for the first book, and 50¢ for each additional one. Canadians may expect Canadian duty charges on shipments of any items except books and subscriptions.

SUBSCRIPTIONS

Subscriptions can be provided anywhere in the United States and its territories as well as Canada by sending mail subscriptions to *Elektor Electronics USA*, PO Box 876, Peterborough NH 03458-0876. Visa/MasterCard orders may be telephoned directly to (603) 924-9464 between 8 and 4 on business days and to our machine recorders at other hours and on weekends. Orders may be FAXed at any time to (603) 924-9467. Subscription rates: $28 per year (11 issues); $50, 2 years. Student Rate to full-time, registered students, $15 per year (photocopy of student ID required).

LETTERS

Letters commenting on articles appearing in *Elektor Electronics USA* or concerning a matter of general interest in any field of electronics should be addressed to the Editor. Publication is at the discretion of the Editor and all letters will be subject to prior editing and/or shortening for publication.

PAST ISSUES

Previous issues of editions published elsewhere are not available.

PAST ARTICLES

Photocopies of articles from January 1988 onward are available from Old Colony Sound Lab for $5 each (multi-part articles: $5 per part); $6 in Canada. Send a stamped (50¢), self-addressed business-size envelope to Old Colony, at the address above, for an article listing.

TECHNICAL QUERIES

Although we are always prepared to assist readers in solving difficulties they may experience with projects that have appeared in *Elektor Electronics USA*, we regret that these cannot, under any circumstances, be dealt with by telephone or FAX.

COMPONENTS

Components for projects appearing in *Elektor Electronics USA* are usually available from appropriate advertisers in this magazine. If you have difficulty finding parts, please send a self-addressed postcard listing the parts you desire and we will attempt to locate a source. If difficulties in the supply of components are envisaged, a source will normally be advised in the article.

BOOKS

The following *Elektor* books are currently available from Old Colony Sound:

301 Circuits	$12.50
302 Circuits	$12.50
303 Circuits	$15.95
Data Sheet Book 2	$16.50
Data Sheet Book 3	$17.95
Microprocessor Data Book	$17.90

FRONT PANELS

PROJECT	No.	Price $	Issue
All solid-state preamplifier	890170-F1	33.50	12/89
	890170-F2	18.50	1/90
LF/HF signal tracer	890183-F	18.50	12/89
Video mixer	87304-F	33.00	1-4/90
Q meter	900031-F	23.00	4/90
Budget sweep/function generator	900040-F	20.00	5/90
High current h_{FE} tester	900078-F	28.00	9/90
400W lab power supply	900082-F	35.00	10-11/90

OLD COLONY SOUND LAB

PO BOX 243
PETERBOROUGH, NH 03458

ORDER FORM

TELEPHONE CHARGE ORDERS
(603) 924-6371, 924-6526
Answering machine before 9 a.m.,
FAX: (603) 924-9467, 24 hours

CUSTOMER ADDRESS

NAME

STREET & NO.

CITY STATE ZIP

MAGIC NUMBER (SUBSCRIBER)

SHIPPING ADDRESS IF DIFFERENT

NAME

COMPANY

STREET & NO.

CITY STATE ZIP

PAYMENT METHOD

☐ CHECK ☐ MONEY ORDER ☐ MASTERCARD ☐ VISA

CARD NUMBER_____ EXPIRES_____/_____

AUTHORIZED SIGNATURE_____ DAYTIME PHONE_____

Qty.	Part Number and Description	Price	Total

SUBTOTAL
SHIPPING
TOTAL

Please supply the following: For PCBs, front panels, EPROMs, and cassettes, state the part number and description; for books, state the full title; for photocopies of articles, state full name of the article and month and year of publication. Please use block capitals.

EPROMS/PALS/MICROCONTROLLERS

PROJECT	No.	Price $	Issue
Intelligent time standard (1 x 2764)	553	20.00	2/88
I/O extension card for IBM (1 x PAL 16L8)	561	17.50	6-7/88
Centronics interface for slide fader (1 x PAL 16R4)	562	17.50	10/88
µP-controlled radio synthesizer (1 x 27C64)	564	20.00	7-9/89
Portable MIDI keyboard (1 x 2764)	567	20.00	11/88
Pitch control for CD players (1 x 2764)	568	20.00	12/88
MIDI control unit (1 x 27C64)	570	20.00	6-7/90
Digital model train (1 x 2764)	572	20.00	2-5,7/89–4/90
Darkroom clock (1 x 27128)	583	18.50	2/90
Video mixer (1 x 2764)	5861	20.00	1-4/90
Four-sensor sunshine recorder (1 x 27128)	5921	20.00	6/90
Slave indication unit for I.T.S. (1 x 8748H)	700	30.00	3/88
EPROM emulator (1 x 8748H)	701	30.00	12/89
Microcontroller driven power supply (1 x 8751)	702	95.00	5,6,9/88
Autonomous I/O controller (1 x 8751)	704	95.00	12/88
8751 programmer (1 x 8751)	5951	95.00	11/90

DISKETTES

PROJECT	No.	Price $	Issue
Digital model train	109	11.50	2-5,7/89–4/90
Logic analyzer for Atari ST (b/w only)	111	20.00	10/89
Computer-controlled Teletext decoder	113	20.00	10/89
Plotter driver	117	11.50	5-6/88
FAX interface, IBM PCs	119	14.00	6/90
RAM extension for BBC-B	123	10.00	7/89
EPROM simulator	129	11.50	12/89
RS-232 splitter	1411	11.50	4/90
Centronics ADC/DAC	1421	11.50	5/90
Transistor characteristic plotting (Atari ST b/w)	1431	13.00	5/90
ROM-copy for BASIC	1441	13.00	9/90
8751 programmer	1471	13.00	11/90
PT100 thermometer	1481	13.00	11/90

PRINTED CIRCUIT BOARDS

PROJECT	No.	Price $
MARCH 1990		
Digital model train	87291-1	7.00
IC monitor	896140	15.00
Power line monitor	900025	9.50
Replacement for TCA280A	894078	11.00
Video mixer (3) (Issues 1-4/90)	87304-3	71.00
APRIL 1990		
BBD sound effects unit	900010	15.50
Digital model train	87291-10	8.00
Q meter	900031	12.00
RS-232 splitter	900017-1	14.50
	900017-2	9.00
Video line selector	900032	13.00
MAY 1990		
Acoustic temperature monitor	UPBS-1	4.00
Budget sweep/function generator	900040	14.00
Centronics ADC/DAC	900037D	30.50
Transistor characteristic plotting	900058	9.50

PRINTED CIRCUIT BOARDS—Continued

PROJECT	No.	Price $
JUNE 1990		
Electronic load simulator	900042	24.00
Mini EPROM viewer	900030	36.00
Power zener diode	UPBS-1	4.00
JULY-AUGUST 1990		
Compact 10A power supply	900045	23.00
Intermediate projects	UPBS-1	4.00
Mini FM transmitter	896118	8.50
Sound demodulator for satellite-TV receivers	900057	7.50
Audio power indicator	904004	7.50
Four-monitor driver for PCs	904067	10.50
SEPTEMBER 1990		
High current h_{FE} tester	900078	11.00
Infrared remote control	904085/86	3.50
OCTOBER 1990		
Guitar tuner	900078	Not Avail.
µP-controlled telephone exchange	900081	36.00
Medium power audio amplifier	900098	18.00
Tuned UHF TV preamp		Not avail. *
Dubbing mixer EV7000		
S-VHS/CVBS-to-RGB converter	900055	24.50
Phase meter	896056	Not avail.
NOVEMBER 1990		
400W lab power supply	900082	22.00
Active mini subwoofer	900122-1	12.00
Dubbing mixer EV7000		*
Medium power audio amplifier	900098	18.00
Programmer for 8751	900100	14.00
PT100 thermometer	900106	10.00
Digital capacitance meter	900123	Not avail.
TDA7330 car radio booster	900046	Not avail.

*Available from ELV France, BP-40-F.-57480 Sierck-les-Bains, France.

CALL OR WRITE FOR YOUR FREE OLD COLONY CATALOG!

WorldRadioHistory

TERMS OF BUSINESS

PRICING
Prices, except as noted, include shipping in the continental USA. The minimum order is $10. A $2 service charge will be added to orders of less than $10. Prices are subject to change as our costs change. WE RESERVE THE RIGHT TO MAKE PRICE CHANGES WITHOUT NOTICE.

ORDERING
Please use the ORDER FORM provided and include part number, quantity and price. Please print clearly and include your Magic Number if you are a subscriber. Please include a ZIP code in your address. The ORDER FORM is designed to help us quickly and accurately process your order. We reserve the right to refuse mail orders not made using the ORDER FORM or orders under the $10 minimum.

TELEPHONE ORDERS
Telephone orders are welcome between the hours of 9:00 a.m. and 4:00 p.m. EST, Monday-Friday. Orders for parts are to be made on the ORDER FORM provided. Payment for telephone orders is by MC/VISA only. Our TELEPHONE ORDER NUMBER IS (603) 924-6371 or 924-6526. Our answering machine for MC/VISA orders during non-business hours is (603) 924-6371. FAX: (603) 924-9467 (24 hours).

PAYMENT
All remittances **MUST BE IN US FUNDS**. Payment for telephone orders must be made by MasterCard or VISA. Mail order payment may be made by MC/VISA, money order, cashier's check or personal check. If payment is made by personal check, allow up to two weeks for check clearance before your order is shipped. Should a check be returned for any reason, there will be a $10 service charge.

SHIPPING
Unless noted, freight is prepaid by Old Colony. All orders shipped USPS first class mail or by UPS. Allow two to three weeks for delivery. Please inquire about appropriate funds for special handling (UPS next day or second day). UPS requires a street address. If you cannot receive UPS delivery, please include an extra $2 for insured service via Parcel Post. We cannot accept responsibility for safety or delivery of uninsured Parcel Post shipments. **Absolutely no COD shipments.**

BOOKS, RECORDINGS, CDs, and SOFTWARE
The shipping/handling charge is $1.75, plus 50¢ each additional item. **No returns**. According to the Connecticut Dept. of Revenue Services, Regulation #27, Section 12-426-27, in order to sell software to residents of Connecticut, we must register with the department as well as collect taxes for the state from the purchaser. We regret to inform our customers that we will not sell software to anyone from Connecticut, as it will prove to be too costly and burdensome.

OVERSEAS ORDERS
For orders to be shipped outside the US, add 20% to the total order to cover shipping.

RETURNS
If you wish to return all or part of an order for any reason, please call or write first. If we are in error, correction will be made promptly, without charge.

If the error is not ours, adjustment will be made at our discretion. We will send you a **return authorization label**. A restocking fee of 20% will be charged on returns. Merchandise considered not fit for resale will be returned without credit or refund. A $2 fee will be charged on exchanges. All returns must be made within **30 days of invoice date**. Books, software, CDs, and recordings are not eligible for return or refund.

WARRANTY
We warrant that all items sold conform to the quality and specifications set forth. We make no representations. We accept no responsibility whatever for further use by the customer. We accept no monetary liability in excess of the original cost or replacement of the material if originally defective or damaged in transit.

PATENTS
Patent protection may exist in respect of circuits, devices, components, and so on described in our books or magazines. *Elektor Electronics USA* does not accept responsibility or liability for failing to identify such patent or other protection.

COPYRIGHT
All drawings, photographs, articles, printed-circuit boards, EPROMs, software, and cassettes published in our books or magazines (other than in third-party advertisements) are copyright and may not be reproduced or transmitted in any form or by any means, including photocopying and recording, in whole or in part, without the prior permission of *Elektor Electronics USA* in writing. Such written permission must also be obtained before any part of these publications is stored in a retrieval system of any nature.

Notwithstanding the above, printed circuit boards may be produced for private and personal use without prior permission.

LIMITATION OF LIABILITY
Elektor Electronics USA shall not be liable in contract, tort, or otherwise, for any loss or damage suffered by the purchaser whatsoever or howsoever arising out of, or in connection with, the supply of goods or services by *Elektor Electronics USA* other than to supply goods as described, or at the option of *Elektor Electronics USA*, to refund the purchaser any money paid in respect of the goods.

LAW
Any question relating to the supply of goods and services by *Elektor Electronics USA* or its subsidiaries shall be determined in all respects by the laws of the United States of America and/or the State of New Hampshire. ■

BOOKS FROM *ELEKTOR ELECTRONICS USA*

MICROPROCESSOR DATA BOOK
This book has come about because of a need by *Elektor Electronics* engineers, technicians, and editorial staff of a ready reference work on the most important microprocessors. This implies that it does not only contain information on the latest devices, such as the transputer, but also on older, well-established types, such as the Z80 and the 6800.

A general description, hardware block schematic, software structure, DC characteristics, and instruction sets are given for over 70 microprocessors. To prevent the book from becoming unwieldy (and to keep costs down), timing diagrams and AC characteristics have, however, been omitted. The detailed information on all manufacturers mentioned will, however, enable any additional information to be obtained quite readily.

Included in the book are, among others:
- the 68000 series
- the 6502 family
- Z80; 8080; and 8085
- Intel's 8086; 80186; 80188; 80286; 80386
- the NS32XXX series
- the INMOS transputers

ISBN 0 905705 28 9
Price $17.90

302 CIRCUITS
The popularity of this book is shown by its having been reprinted no fewer than three times. It offers a selection of the most interesting articles from the 1982, 1983, 1984 summer issues of *Elektor Electronics*.

In it you will find circuits for audio and video; car, cycle, and motorcycle; home and garden; receivers and aerials; hobbies and games; measuring and testing; oscillators and generators; current sources and power supplies; microcomputers and music electronics; and a miscellany of other interesting subjects.

ISBN 0 905705 25 4
Price $12.50

303 CIRCUITS
Like its predecessors, *303 CIRCUITS* offers a comprehensive collection of practical ideas, concepts, and developments in the gamut of electronics. Unlike its predecessors, the book is arranged in 11 subject sections to make it easier for the reader to find that long-sought circuit.

In well over 300 pages, the book offers 32 Audio and Hi-Fi projects; 14 circuits for Car and Bicycles; 43 Computer & Microprocessor circuits; 11 Electrophonic projects; 24 HF and VHF circuits; 16 circuits for a number of hobbies and pastimes; 54 projects for Home and Garden; 29 Power Supply circuits; 29 circuits for Test and Measurement equipment; nine TV and Video projects; as well as 42 Design Ideas.

ISBN 0 905705 62 2
Price $15.90

DATA SHEET BOOK 2
Like its predecessor (now out of print), this book offers concise, relevant, and rapidly accessible information, which is both practical (e.g., the pin-out of a device) and informative.

The book contains data on integrated circuits as well as on discrete transistors and diodes. Moreover, it gives an introduction to fast (HCMOS) devices and a review of the new symbolic logic as laid down in British Standard BS3939:Section 21 (IEC Standard 617-12).

The final part of the book deals with a number of computer chips, such as memory devices (including programming information for these) and I/O circuits. This section also includes data on a number of non-digital discrete and integrated devices, such as op amps, as well as on some microprocessor peripherals (e.g., the 6522 VIA, the 6580 ACIA, and the 8355A PPI).

ISBN 0 905705 27 0
Price $16.50

These books are all available direct from *Elektor Electronics USA* through the Readers Services, from a number of bookshops and electronics retailers in the US and Canada, and from selected bookshops throughout the world.

Worldradiohistory

GLASS AUDIO

The newest publication from the folks who bring you *Audio Amateur* and *Speaker Builder*

Glass Audio features the best vacuum tube designs for audio reproduction—past and contemporary. The new designs take advantage of improved components and control techniques that make the end results far superior to anything possible during the early days of audio's rebirth after World War II.

That's why tubes are having such a renaissance of interest as a perfectionist approach to good sound. And that's why tubes are reappearing in original equipment, in high end consumer and professional audio systems.

Published twice a year in June and December, *Glass Audio* will inform you about new innovations in the field and about parts sources. We'll also include modification projects, reviews of technical basics and regular columns such as Tube Troubles, Tube Tips and much more.

Subscribe today!

AudioAmateur

THE JOURNAL FOR AUDIOPHILE CRAFTS

The innovative, independent audiophile journal for the thoughtful and capable music lover

Audio Amateur's articles deal with how audio equipment works, as well as how to build or modify it. Construction and modification articles are plentiful, supplying all needed parts, performance and assembly details. Exceptionally high quality designs.

Audio Amateur offers a number of features in each issue that abound with useful ideas. The *Letters* column is an open forum for problem solving and information interchange; *Classic Circuitry* reprints schematics of state-of-the-art gear—old and new; *Audio Aids* relates readers' experience with simple modifications to equipment and construction techniques. We also feature many useful and practical hi-fi accessories you can build to further your audio enjoyment.

For a small investment you can make your music system sound better—very probably a lot better.

SpeakerBuilder

THE LOUDSPEAKER JOURNAL

The magazine that finally deals seriously with the art and craft of speaker building

The *Art* of building a speaker is to optimize that mixture of design and engineering to balance all the parameters for the most beautiful sound possible. The *Craft* is knowing how and why. ***Speaker Builder*** gives you knowledge—from driver parameters and crossovers to woodworking—to develop and refine your techniques, and to get the most out of your system.

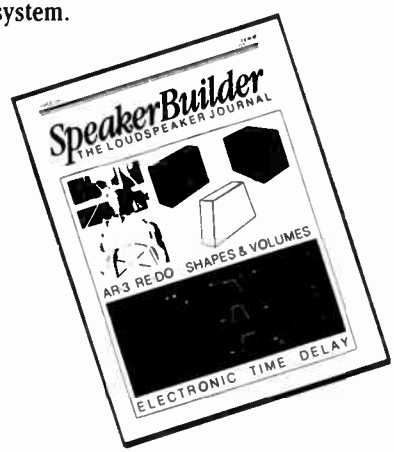

Speaker Builder helps you explore new designs with how-to construction articles, and can show you how to modify your old speakers and make them sound better than ever. Learn from our writers who turn abstract theory into practical approaches, and from the experience of other readers who have been down the road before you. ***Speaker Builder*** is the best investment you can make in your system—six issues per year filled with stimulating and exciting ideas.

GLASS AUDIO

☐ **Two years,** (4 issues) **$18**
☐ **One year,** (2 issues) **$10**
Canada add $2 per year postage

AUDIO AMATEUR

☐ **Two years,** (8 issues) **$35**
☐ **One year,** (4 issues) **$20**
Canada add $4 per year postage

SPEAKER BUILDER

☐ **Two years,** (12 issues) **$45**
☐ **One year,** (6 issues) **$25**
Canada add $4 per year postage

NAME

STREET & NO.

CITY STATE ZIP

MC OR VISA NUMBER EXPIRE

AUDIO AMATEUR PUBLICATIONS

PO Box 576, Dept. EE0, Peterborough, NH 03458-0576
(603) 924-9464 FAX: (603) 924-9467

Answering machine for credit card orders only: before 9:00 a.m., after 4:00 p.m. and weekends.
Have all information plus MC/VISA available.

WorldRadioHistory

Courtious Service • Discount Prices • Fast Shipping

ALL ELECTRONICS CORP.

P.O. Box 567 • Van Nuys, CA 91408

12 Vdc 5 AMP POWER SUPPLY

ACDC Electronics# 12N5
or equiv. Input: 100-240 Vac
(wired for 115 Vac)
Output: 12 Vdc @ 5 amps.
7" X 4 3/4" X 3" high.
Regulated. **CAT# PS-125 $37.50 each**

FLASHER LED

Diffused L.E.D. with built in flashing unit. Pulse Rate: 3 Hz @ 5 Volt/20 ma. Unit continually flashes when 5 Volts is applied. Operates between 4.5 Volts and 5.5 Volts. T 1 3/4 size.

RED **CAT# LED-4**
GREEN **CAT# LED-4G**
YELLOW **CAT# LED-4Y**
$1.00 each • 10 for 9.50
100 for $90.00

210 MFD 330 VOLT PHOTOFLASH CAPACITOR

Rubicon CE photoflash capacitor. 0.79" dia. X 1.1" high. These are new capacitors that have been prepped with 1.4" black and red wire leads soldered to the terminals. **CAT# PPC-210**
$2.50 each • 10 for $22.50 • 100 for $200.00
Large quantities available. Call for pricing.

INSTRUMENT ENCLOSURES

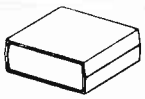

High quality molded ABS instrument enclosures. Integrated PC board standoffs and two sets of vertical mounting slots for front and rear sub panels. All enclosures are 6" wide X 6 1/4" deep. Choice of three hts. Includes non-skid rubber feet and hardware. Available in beige, ivory, black, and blue.

Panel ht.	CAT#		
2 1/4"	**CAT# MB-A**	$7.50 ea	10 / $65.00
2 5/8"	**CAT# MB-B**	$7.75 ea	10 / $67.50
3"	**CAT# MB-C**	$8.00 ea	10 / $70.00

Please specify color.

STEPPING MOTORS

Airpax# A82743-M4
12 Vdc 35 ohm dual coil, permanent magnet stepper motor. 7.5 degrees per step. 2.25" dia. X .91" thick. 0.25" dia. shaft is 0.6" long. Two hole mounting flange, 2.625" centers. 6 wire leads. **CAT# SMT-5 $10.00 each**

Airpax# C82711-M1 17 Vdc 23.25 ohm dual coil, permanent magnet stepper motor. 7.5 degrees per step. 2.25" dia. X .91" thick. 0.25" dia. shaft is 0.6" long. Two hole mounting on 2.625" centers. 6 wire leads. **CAT# SMT-6 $6.00 each • 10 for $50.00**

Airpax# C 82710 12 Vdc, 36 ohm dual coil permanent magnet stepper motor. 7.5 degrees per step. 2.25" dia. body X 0.93"high. Mounts on 2.675" centers. 6 wire leads. **CAT# SMT-7 $7.00 each • 10 for $65.00**

PHOTO RESISTOR

100 ohms bright light.
16K ohms dark.
0.182" dia. X .08"high. 0.18" long leads.
CAT# PRE-7 2 for $1.00
100 for $45.00 • 1000 for $400.00

REFLECTIVE OPTO SENSORS

These units have an IR emitter and sensor pairpointing in the same direction. Light from emitter bounces off object to be detected by sensor. Effective range approx. 0.15".

TRW/ Optron# OPB5447-2
Rectangular w/ 28" wire leads
CAT# OSR-4 2 for $1.00

TRW/ Optron# OPB703A
Wedge shape with PC pins.
CAT# OSR-3 75¢ each

TRW/ Optron# OPB711
Rectangular with PC pins.
CAT# OSR-2 75¢ each

RG 11/U 75 OHM VIDEO CABLE

Ivory RG 11/U terminated with heavy-duty F connectors. Also includes a F-61 splicer and a 75 ohm terminator load. New cables manufactured for IBM pc networks. UL listed. Specs: 75 ohm impedance. Cable jacket O.D. 0.405". Dielectric 0.285" dia. Center conductor 0.047" diameter IBM P/N 1501908 COM/SCOPE.

CAT# RG-11-1 100 foot roll $15.00
CAT# RG-11-2 200 foot roll $27.50

TOLL FREE ORDER LINES

1-800-826-5432

CHARGE ORDERS to Visa, MasterCard or Discover

TERMS: Minimum order $10.00. Shipping and handling for the 48 continental U.S.A. $3.50 per order. All others including AK, HI, PR or Canada must pay full shipping. All orders delivered in CALIFORNIA must include state sales tax (6 1/4 %, 6 3/4 %, 7 1/4 %). Quantities Limited. NO C.O.D. Prices subject to change without notice.

Call Toll Free, or clip this coupon

FREE 60 Page Catalog containing over 4,000 ITEMS

ALL ELECTRONICS CORP.

P.O. Box 567 • Van Nuys, CA • 91408

Name _____

Address _____

City _____ State _____ Zip _____

EE 10/90

THE R.F. CONNECTION

213 North Frederick Ave. #11
Gaithersburg, MD 20877

ORDERS 1-800-783-2666

INFO 301-840-5477 FAX 301-869-3680

"THIS LIST REPRESENTS ONLY A FRACTION OF OUR HUGE INVENTORY"

"Specialist in RF Connectors and Coax"

Part No.	Description	Price
PL-259/USA	UHF Male Phenolic, USA made	$ .70
PL-259/ST	UHF Male Silver Teflon USA	1.50
UG-21D/U	N Male RG-8, 213, 214 Delta	3.25
UG-21B/U	N Male RG-8, 213, 214, Kings	5.00
9913/PIN	N Male Pin for 9913, 9086, 8214 Fits UG-21 D/U & UG-21 B/UN's	1.50
UG-21D/9913	N Male for RG-8 with 9913 Pin	3.95
UG-21B/9913	N Male for RG-8 with 9913 Pin	5.75
UG-146A/U	N Male to SO-239, Teflon USA	6.00
UG-83B/U	N Female to PL-259, Teflon USA	6.00

PRICES DO NOT INCLUDE SHIPPING
PRICES SUBJECT TO CHANGE
VISA, MASTERCARD, ADD 4%
UPS C.O.D. ADD $3.50 PER ORDER

In 1988, **Madisound Speaker Components** processed 20,000 orders.

VIFA	**DYNAUDIO**	**PERFECT LAY**
FOCAL	**MB QUART**	**SIDEWINDER**
PHILIPS	**AUDAX**	**ELECTROVOICE**
EUROPA	**PEERLESS**	**SLEDGEHAMMER**
MOREL	**SOLEN**	
KEF	**ETON**	

Doesn't your hobby deserve these fine product lines?

MADISOUND SPEAKER COMPONENTS

8608 University Green
Box 4283, Madison, WI 53711
Phone (608) 831-3433 FAX: (608) 831-3771

INDEX OF ADVERTISERS

All Electronics 66
Audio Amateur Magazine 65
Glass Audio Magazine 65
Kelvin Electronics 7
Madisound Speaker Components 66
Mark V Electronics 4
Morel Acoustics USA ..... Cover II
NRI School of Electronics 9
Old Colony
Audio Glossary/Holt 6
Books 5
Killer Car Stereo 8
Kits 10
OPTOelectronics ..... Cover IV
PacComm Systems 8
The R. F. Connection 66
Sescom ..... Cover III
Speaker Builder Magazine 65

WorldRadioHistory

SESCOM INC.
PARTS DIVISION
2100 WARD DR.
HENDERSON, NV 89015 -9998

THE "FIRST CHOICE" FOR CONSTRUCTORS HARDWARE

Rack Chassis

MODEL #.	DESCRIPTION (Width x Depth x Height)	PRICE $
1RU5	19 x 5 x 1.75 in. (482.6 x 127 x 44.45mm)	28.00
1RU7	19 x 7 x 1.75 in (482.6 x 177 x 44.45mm)	30.00
1RU10	19 x 10 x 1.75 in. (482.6 x 254 x 44.45mm)	32.00
2RU5	19 x 5 x 3.50 in. (482.6 x 127 x 88.9mm)	30.00
2RU7	19 x 7 x 3.50 in. (482.6 x 177.8 x 88.9mm)	32.00
2RU10	19 x 10 x 3.50 in. (482.6 x 254 x 88.9mm)	34.00
3RU5	19 x 5 x 5.25 in. (482.6 x 127 x 133.35mm)	38.00
3RU7	19 x 7 x 5.25 in. (482.6 x 177.8 x 133.35mm)	40.00
3RU10	19 x 10 x 5.25 in. (482.6 x 254 x 133.35mm)	42.00

The above rack chassis are made of .063 aluminum.
The front and rear panels are clear brushed anodized.
All hardware is included. Assembly Required.

Metal Cabinets

MODEL #.	DESCRIPTION (Width x Depth x Height)	PRICE $
MC-1A	4 x 3 x 2 in. (101.6 x 76.2 x 50.8mm)	15.00
MC-2A	6 x 3 x 2 in. (152.4 x 76.2 x 50.8mm)	17.00
MC-3A	8 x 3 x 2 in. (203.2 x 76.2 x 50.8mm)	19.00
MC-4A	4 x 5 x 3 in. (101.6 x 127 x 76.2mm)	17.00
MC-5A	6 x 5 x 3 in. (152.4 x 127 x 76.2mm)	19.00
MC-6A	8 x 5 x 3 in. (203.2 x 127 x 76.2mm)	21.00
MC-7A	4 x 7 x 4 in. (101.6 x 177.8 x 101.6mm)	19.00
MC-8A	6 x 7 x 4 in. (152.4 x 177.8 x 101.6mm)	21.00
MC-9A	8 x 7 x 4 in. (203.2 x 177.8 x 101.6mm)	23.00

The above cabinets are made of .063 aluminum.
The front and rear panels are clear brushed anodized.
All hardware and rubber feet are included. Assembly Required.

Punch Kits and Punches

Model #.	Description	Price $
HP-1	5 JR TOOL KIT	49.00
HP-3	BENCH MOUNT	15.00
PD-1	ROUND 1/16"	6.00
PD-2	ROUND 5/64"	6.00
PD-3	ROUND 3/32"	6.00
PD-4	ROUND 7/64"	6.00
PD-5	ROUND 1/8"	6.00
PD-6	ROUND 9/64"	6.00
PD-7	ROUND 5/32"	6.00
PD-8	ROUND 11/64"	6.00
PD-9	ROUND 3/16"	6.00
PD-10	ROUND 13/64"	6.00
PD-11	ROUND 7/32"	6.00
PD-12	ROUND 15/64"	6.00
PD-13	ROUND 1/4"	6.00
PD-14	ROUND 17/64"	6.00
PD-15	ROUND 9/32	6.00
PD-16	SQUARE 1/8"	66.90
PD-17	SQUARE 5/32"	66.90
PD-18	SQUARE 3/16"	66.90
PD-19	REC. 1/8 x 3/16"	66.90
PD-20	REC. 1/8 x 7/32"	66.90
PD-21	REC 1/8 x 15/64"	66.90

Model #.	Description	Price $
HP-2	XX TOOL KIT	129.75
HP-4	BENCH MOUNT	15.00
PD-30	ROUND 1/16"	9.50
PD-31	ROUND 5/64"	9.50
PD-32	ROUND 3/32"	9.50
PD-33	ROUND 7/64"	9.50
PD-34	ROUND 1/8"	9.50
PD-35	ROUND 9/64"	9.50
PD-36	ROUND 5/32"	9.50
PD-37	ROUND 11/64"	9.50
PD-38	ROUND 3/16"	9.50
PD-39	ROUND 13/64"	9.50
PD-40	ROUND 7/32"	9.50
PD-41	ROUND 15/64"	9.50
PD-42	ROUND 1/4"	9.50
PD-43	RONND 17/64"	9.50
PD-44	ROUND 9/32	9.50
PD-45	ROUND 19/64"	9.50
PD-46	ROUND 5/16"	9.50
PD-47	ROUND 21/64"	9.50
PD-48	ROUND 11/32"	9.50
PD-49	ROUND 23/64"	9.50
PD-50	RCUND 3/8"	9.50
PD-51	RCUND 25/64"	9.50
PD-52	ROUND 13/32"	9.50
PD-53	ROUND 27/64"	9.50
PD-54	ROUND 7/16"	9.50
PD-55	ROUND 29/64"	9.50
PD-56	ROUND 15/32"	9.50
PD-57	ROUND 31/64"	9.50
PD-58	ROUND 1/2"	6.00
PD-59	ROUND 33/64"	6.00
PD-60	ROUND 17/32"	6.00
PD-61	SQUARE 1/8"	66.90
PD-62	SQUARE 5/32"	66.90
PD-63	SQUARE 3/16"	66.90
PD-64	REC. 1/8 x 3/16"	83.10
PD-65	REC. 1/8 x 1/4"	83.10
PD-66	REC. 1/8 x 5/16"	83.10
PD-67	REC. 1/8 x 3/8"	83.10
PD-68	REC. 1/8 x 11/32	75.10

Rub-On Letters

MODEL #.	DESCRIPTION	PRICE $
LT-1	CAPITAL LETTERS HELVETICA 14 pt.	3.95
LT-2	LOWER CASE LETTERS HELVETICA 14 pt.	3.95
LT-3	NUMBERS HELVETICA 14 pt.	3.95
LT-4	CAPITAL LETTERS HELVETICA 10 pt.	3.95
LT-5	LOWER CASE LETTERS HELVETICA 10 pt.	3.95
LT-6	NUMBERS HELVETICA 10 pt.	3.95
LT-7	CAPITAL LETTERS HELVETICA 6 pt.	3.95
LT-8	LOWER CASE LETTERS HELVETICA 6 pt.	3.95
LT-9	NUMBERS HELVETICA 6 pt.	4.95
LT-10	DIAL MARKING (DOTS)	4.95
LT-11	DIAL MARKING (LINES)	3.95
LT-12	WORDS (AUDIO) HELVETICA 10 pt.	3.95
LT-12	WORDS (AUDIO) HELVETICA CAPS 6 pt	3.95
LT-12	WORDS (AUDIO) HELVETICA UPPER AND LOWER CASE 6 pt.	3.95

TERMS AND CONDITIONS

MINIMUM ORDER: The minimum order is $10.00.

TERMS: Terms of payment on open accounts are NET 30 days from date of invoice.

C.O.D. ORDERS: Payment must be made in cash, money order or certified check. A company check will be accepted only if previously approved by the factory.

OPEN ACCOUNTS: SESCOM, INC. extends credit to government agencies and industrial accounts with a good published rating. Firms may apply for an open account by requesting a credit application from the Accounts Receivable department. All orders are shipped C.O.D. until credit is approved. (Please allow 4 to 6 weeks to open a new account.) We accept Mastercard and Visa.

PRICES: Catalog prices are NET, FOB destination shipped UPS ground. UPS BLUE and REO LABEL service available at an additional charge: UPS BLUE is $10.00 and UPS RED is $20.00. PRICES ARE SUBJECT TO CHANGE WITHOUT NOTICE. Orders are invoiced at prices in effect at the time of shipment unless specifically quoted otherwise. SESCOM, INC. shall add any existing or future Federal, State, or Local taxes that may apply. We reserve the right to apply the above if your Tax Exemption Certificate is not on file with our office.

SHORTAGE OR DAMAGE: All claims for shortage or shipment error must be made within 10 days after receipt of the shipment. Our liability is limited to the material value on the invoice.

MERCHANDISE RETURN: A prior written authorization from SESCOM, INC. must be issued before return of any material. Instructions for returning the material will accompany the authorization. Material that is returned without authorization or is over 90 days will carry a restocking fee of a minimum of 25% to a maximum 100%. Special order items will not be accepted for return.

SUBSTITUTIONS: We reserve the right to substitute higher quality (but identical part) at our option, unless you specify no substitution at the time of the order.

Sheet Metal Punches

MODEL #.	HOLE SIZE		PILOT HOLE	PRICE $
PUNCH 1	3/8"	ROUND	3/16"	8.95
PUNCH 2	7/16"	ROUND	7/16"	8.95
PUNCH 3	1/2"	ROUND	7/32"	8.95
PUNCH 4	9/16"	ROUND	7/32"	11.95
PUNCH 5	5/8"	ROUND	7/32"	11.95
PUNCH 6	11/16"	ROUND	7/32"	11.95
PUNCH 7	3/4"	ROUND	7/32"	11.95
PUNCH 8	13/16"	ROUND	7/32"	11.95
PUNCH 9	7/8"	ROUND	7/32"	11.95
PUNCH 10	1"	ROUND	5/16"	12.95
PUNCH 11	1-1/16"	ROUND	5/16"	12.95
PUNCH 12	1-1/8"	ROUND	5/16"	12.95
PUNCH 13	1-3/16"	ROUND	5/16"	12.95
PUNCH 14	1-1/4"	ROUND	5/16"	13.95
PUNCH 15	1-3/8"	ROUND	5/16"	13.95
PUNCH 16	1-1/2"	ROUND	5/16"	15.95
PUNCH 17	1-5/8"	ROUND	5/16"	20.95
PUNCH 18	1-3/4"	ROUND	5/16"	23.95
PUNCH 19	2-5/8"	ROUND	1/2"	59.95
PUNCH 20	11/16"	SQUARE	1/2"	31.95
PUNCH 21	3/4"	SQUARE	1/2"	35.95
PUNCH 22	1"	SQUARE	1/2"	45.95
PUNCH 23	21/32 x 5/16"	REC.	1/2"	45.95
*PUNCH 24	*THURST RACES FOR PUNCHES (FOR EASIER PUNCHING) 1" thru 1-3/4"			9.95

Component Parts

TRANSISTORS:

PART NO.	DESCRIPTION	1-9	10-99	100 +
2N3904	NPN T092	.12	.10	.08
2N3906	PNP T092	.12	.10	.08
2N2102	PNP T039	.80	.67	.54
2N4037	PNP T039	.90	.75	.60
PN2219A	NPN T0237	.40	.34	.28
PN2905A	PNP T0237	.40	.34	.28

DIODES:

PART NO.	DESCRIPTION	1-9	10-99	100 +
1N34A	GE DIODE	.17	.15	.13
1N4001	SI DIODE	.13	.11	.10
1N4148	SI DIODE	.09	.07	.06

LINEAR INTEGRATED CIRCUITS:

PART NO.	DESCRIPTION	1-9	10-99	100 +
LF351N	SINGLE OP-AMP	.60	.54	.48
LF353N	DUAL OP-AMP	1.05	.95	.84
NE5534N	SINGLE OP-AMP	1.28	1.15	1.02
NE5534AN	LOW NOISE SINGLE OP-AMP	1.80	1.62	1 44
NE5532N	DUAL OP-AMP	1.85	1.67	1.48

I C SOCKETS:

PART NO.	DESCRIPTION	1-9	10-99	100 +
SOC-8	8 PIN TIN	.11	.10	.09
SOC-14	14 PIN TIN	.12	.11	.10
SOC-16	16 PIN TIN	.13	.12	.11
SOC-18	18 PIN TIN	.15	.14	.13
SOC-20	20 PIN TIN	.19	.16	.15

CARBON FILM RESISTORS:

PART NO.	DESCRIPTION	1-9	10-99	100 +
CF + VALUE	5 % 1/4W	.05	.02	.01

ALL STANDARD VALUES 1.0 OHM THRU 1.0M OHM

POTENTIOMETERS:

PART NO.	DESCRIPTION	1-9	10-99	100 +
10KA	10K AUDIO TAPER	2.00	1.80	1.60

CONNECTORS:

PART NO.	DESCRIPTION	1-9	10-99	100 +
XLR F CA	3 PIN CABLE FEMALE	3.20	2.88	2.56
XLR M CA	3 PIN CABLE MALE	2.75	2.48	2.20
XLR F CH	3 PIN CHASSIS FEMALE	3.60	3.24	2.88
XLR M CH	3 PIN CHASSIS MALE	2.60	2.40	2.08
1/4 ST	1/4" STERIO JACK	.97	.87	.78
3.5 ST	3.5mm STERIO JACK	.97	.87	.78
RCA	RCA PHONO JACK CHASSIS	.65	.59	.52

CAPACITORS: Axial Lead Electrolytic

PART NO.	DESCRIPTION	1-9	10-99	100 +
AC 1/50	1uf - 50V	.38	.35	.30
AC 4.7/25	4.7uf - 25V	.39	.35	.30
AC 10/25	10uf - 25V	.39	.35	.30
AC 47/25	47uf - 25V	.46	.42	.37
AC 100/25	100uf - 25V	.69	.62	.55
AC 220/35	220uf - 35V	.97	.87	.78
AC 470/35	470uf - 35V	1.34	1.21	1.07
AC 1000/35	1000uf - 35V	2.22	2.00	1.78

CAPACITORS: Radial Lead Electrolytic

PART NO.	DESCRIPTION	1-9	10-99	100 +
RC 1/50	1uf - 50V	.26	.24	.21
RC 4.7/25	4.7uf - 25V	.28	.26	.23
RC 10/25	10uf - 25V	.31	.28	.25
RC 47/25	47uf - 25V	.39	.35	.28
RC 100/25	100uf - 25V	.41	.36	.33
RC 220/35	220uf - 35V	.61	.55	.49
RC 470/35	470uf - 35V	.99	.90	.80
RC 1000/35	1000uf - 35V	1.27	1.15	1.02

MasterCard

VISA

• UPS GROUND SHIPPING IS FREE WITHIN THE CONTINENTAL LIMITS OF THE USA •
TOLL FREE ORDERING IN ALL 50 STATES AND CANADA

FOR ADDITIONAL INFORMATION CONTACT:

SESCOM INC.- PARTS DIVISION, 2100 WARD DR., HENDERSON, NV 89015-9998

FOR ORDERS: 1-800-634-3457 • FAX: 1-702-565-4828 • REGULAR BUSINESS: 1-702-565-3400

BUSINESS HOURS: 8:00 A.M. TO 4:00 P.M. PACIFIC TIME , MONDAY THRU FRIDAY

WorldRadioHistory

OPTOELECTRONICS

The only name in HANDI-COUNTERS

Check These Incredible Features On The All New UTC3000

- **10Hz to 2.4GHz Range.** Simply amazing!
- **10 Digit LCD Display.** 1Hz resolution to over 150 MHz direct. Readable in bright sunlight.
- **RF Signal Strength Bargraph.** 16 Segment, Zero, & Full Scale adjustment. SEE the input signal!
- **Super Sensitivity.** <1mV 10-200MHz, <5mV to 2GHz for efficient antenna pickup.
- **6 Functions.** Frequency, Period, Ratio Time Interval, Average, & Prescale.
- **Hold Button.** "Locks in" your exact Measurement FAST!
- **Extruded Aluminum Enclosure.** Designed to fit every hand.
- **Priced Right! Only $375.** Includes Nicads, AC Charger/Adapter.

Or Select Our Most Popular **HANDI-COUNTER,** the model **2210** that set the standard in handheld frequency counter technology! **Value Priced at only $239.**

Professionals and Hobbyists all over the world have chosen **OEI** for 16 years! **Shouldn't YOU?**

HANDI-COUNTERS! ... Only from **OEI**! Choose the model that fits your needs... and your budget! **CALL NOW!**

UTC3000

Period Average Mode

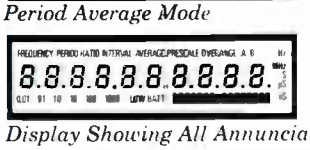

Display Showing All Annunciators

Model	UTC3000	2600H	2210	1300H/A	2400H	CCA	CCB
Function	Freq, Period Ratio, Interval, Avg, Prescale	Frequency	Frequency	Frequency	Frequency	Frequency	RF Indicator
Range	10Hz-2.4GHz	10MHz-2.4GHz	10Hz-2.2GHz	1MHz-1.3GHz	10MHz-2.4GHz	10MHz-550MHz	10MHz-1.8GHz
Display	10 Digit LCD w/Function Annunciators	10 Digit LCD	8 Digit LED	8Digit LED	8 Digit LED	8 Digit LED	•
RF Signal Strength Indicator	16 Segment Adjustable Bargraph	16 Segment Adjustable Bargraph	•	•	•	LED with Adjustable Threshold	10 Segment Adjustable Bargraph
Price	$375.	$325.	$239.	$179.	$189.	$299.	$119.

Sensitivity: <1 to <10mV typical. Time Base: ± 1.ppm.; ± .5ppm. add $75 - LED Models; ±.2ppm add $80. - LCD Models. Nicads & AC charger/adapter included. (9v Alkaline - CCB.) Carry Case, Antennas and Probes extra. One year parts & labor warranty on all products.

OPTOELECTRONICS
5821 NE 14th Avenue • Ft. Lauderdale, FL 33334

Toll Free Order Line:
1-800-327-5912
FL(305)771-2050 • FAX(305)771-2052

Visa, MC, COD, Cash, M.O. accepted. Personal Check allow 3 weeks. 5% Shipping, Handling, (Maximum $10) U.S. & Canada. 15% outside continental U.S.A. In FL add 6% sales tax.

WorldRadioHistory