MAY 1986 $3.30 NZ$4.50
AUSTRALIA'S TOP ELECTRONICS JOURNAL

The Australian Electronics Monthly

excitement electronics

PROJECT SUPERMODEM

Build our
FM ANTENNA

- Communications — Ionospheric predictions explained
- Practicalities — 5 & 12 volt switchmode power supply
- Computing — Dabbling in the dial-up data jungle
- HI-FI — Pioneer's 'six-pack' CD player

WITH FREE CATALOGUE FROM DICK SMITH ELECTRONICS

Build a low noise
GaAsFET UHF PREAMP

World Radio History

The best DMM in its class just got better.

The Fluke 80TK.
One innovation leads to another.

First there was the 70 Series, which set a new standard for low-cost, high-performance, Fluke-quality multimeters.

And now, another first. The Fluke 80TK K-type Thermocouple Converter. A temperature measurement device that adds instant temperature measurement capabilities to the 70 Series DMMs.

Or any DMM, for that matter.

Feature for feature, the versatile 80TK is the most affordable unit of its kind. For quick comparison readings, it can measure °C or °F at the flick of a switch. It includes a built-in battery test. And the availability of 3 Fluke probes give you the flexibility to measure any form of temperature, from freezer to furnace, with just one base unit.

No other thermocouple converter we know of offers DMM users so much for so little.

So even if you don't own a Fluke 70 Series multimeter, the 80TK will help the DMM you're now using measure up when things get hot. Or cold.

FROM THE WORLD LEADER IN DIGITAL MULTIMETERS.

FLUKE®

Surface, immersion and general-purpose probes with "mini" thermocouple connectors are available for the Fluke 80TK.

80TK SPECIFICATIONS

Temperature Measurement Range
−50 to 1000°C
−58 to 1832 °F
Battery Life: 1600 Hours (9V)

ELMEASCO
Instruments Pty. Ltd.

N.S.W. 15 McDonald St, Mortlake. Tel: (02) 736 2888
VIC. 12 Maroondah Hwy, Ringwood. Tel: (03) 879 2322
QLD. 243 Milton Rd, Milton. Tel: (07) 369 8688
S.A. 241 Churchill Rd, Prospect. Tel: (08) 344 9000
W.A. 46-48 Kings Pk Rd, West Perth. Tel: (09) 481 1500

Talk to your local distributor about Fluke

• ***A.C.T.*** Actiec Pty Ltd (062) 80 6576 • George Brown 80 4355 • ***N.S.W.*** Ames Agency 699 4524 • George Brown (02) 519 5855 Newcastle 69 6399 • Bryan Catt Industries 526 2222 • Collier Tools 763 1888 • D G E Systems (049) 69 1625 • Davred Electronics 267 1385 • W.F. Dixon (049) 61 5628 • Macelec (042) 29 1455 Ebson 707 2111 • Selectro Parts 708 3244 • Geoff Woods 810 6845 • ***N. TERRITORY*** Thew & McCann (089) 84 4999 • ***QUEENSLAND*** L.E. Boughen 369 1277 • Colourview Wholesale 275 3188 • Fred Hoe & Sons 277 4311 • Nortek (077) 79 8600 • St Lucia Electronics 52 7466 • Selectro Parts (Qld) 394 2422 • ***S. AUSTRALIA*** Protronics 212 3111 • Trio Electrix 212 6235 • Redarc Electronics 278 7488 • A.W.M. Wholesale • ***TASMANIA*** George Harvey (003) 31 6533, (002) 34 2233 • ***VICTORIA*** A.W.M. Electrical Wholesale • Radio Parts 329 7888 • G.B. Telespares 328 3371 • Browntronics 419 3986 • R.K.B. Agency 82 7704 • A.J. Ferguson 347 6688 • SIRS Sales (052) 78 1251 • Mektronics 690 4593 • ***W. AUSTRALIA*** Atkins Carlisle 321 0101 • Dobbie Instruments 276 8888 • Cairns Instrument Services 325 3144 • Willis Trading 470 1118

ETI READER SERVICE 100

World Radio History

The Australian Electronics Monthly

WORLDWIDE, the debate over President Reagan's *Strategic Defence Initiative*, better known as "Star Wars", has polarised sections of the community, ranging from physicists and computer scientists to politicians and just plain folk. In recent days, the question of the grandiose plan's feasibility has been swept aside in the debate as to whether this or that research organisation should accept the not inconsiderable bucks to be passed around during the various phases of the project's development.

Sections of the scientific community in Australia recently warned that Australia could miss out on contracts worth hundreds of millions of dollars if the Federal Government vetoed research linked with the controversial SDI programme. The US Government funding for overseas research is worth around $2.6 billion annually. Even a tiny slice of this 'pie' would mean a great deal to local research and development organisations and would contribute significantly to our balance of trade payments. Then there's the spin-off benefits to be considered. Virtually any research of the nature proposed creates a host of spin-off benefits in products and services.

It appears to me that there are opposing considerations involved, placed at either end of a delicate see-saw. On the one end is the cash inflow, the importance of research experience and the spin-offs to be gained. On the opposing end is the moral question of 'dealing in death', and the gamble involved that the goal of the SDI programme will never see fruition. There's no doubting the considerable gains made from defence research undertaken during World War II. But a price was paid — on both sides.

No matter how peripherally Australia may be involved in the SDI programme, we're gambling on its eventuality being unnecessary — meanwhile, we'll take the bucks and run, thank you. Australians have some reputation as gamblers. But what sort of company do we keep when we roll dice with the devil?

Who friendship with a knave has made,
is judged a partner in the trade.
— John Gay

Roger Harrison
Editor

COPYRIGHT: The contents of The Australian Electronics Monthly is fully protected by the Commonwealth Copyright Act (1968). Copyright extends to all written material, drawings, circuit diagrams, printed circuit boards, computer software and photographs. Although any form of reproduction is a breach of copyright, and we especially point out this extends to the construction of projects produced by our laboratory or our associates, we are not concerned about individuals constructing projects for their own private use, nor by bands for example, constructing one or more units for use in performances. Commercial organisations should note that no project or part project, including printed circuit boards produced by our laboratory or our associates and described in this magazine may be offered for sale, or sold, in fully or substantially assembled form, unless a licence has been specifically obtained to do so from the publishers, Kedhorn Holdings Pty Ltd, or from the copyright holders. We will take strenuous legal action against any person or firm found infringing our copyright as aforesaid.

LIABILITY: Whilst all efforts have been made to ensure that all constructional projects and circuits referred to in this issue will operate as indicated efficiently and correctly and that all necessary components to assemble the same will be available, no responsibility whatsoever is accepted in respect nf the failure for any reason at all of the project or circuit to operate effectively or at all whether due to any fault in design or otherwise and no responsibility is accepted for the failure to obtain any components in respect of such project or circuit. In addition, no responsibility is accepted in respect of any injury or damage caused by any fault in the design of any such project or circuit aforesaid. The publisher accepts no responsibility for unsolicited manuscripts, illustrations, computer software or photographic material although all care will be exercised. Comments and test results on equipment reviewed refer to the particular item submitted for review and may not necessarily pertain to other units of the same make or model number.

Roger Harrison VK2ZTB **EDITOR**

David Tilbrook B.Sc. **PROJECT DIRECTOR**

PROJECT ENGINEER
Tony Tilbrook (true!)
ADVERTISING/MARKETING
John Whalen
PUBLISHER
Adrian Farrow
DRAUGHTING
David Currie
PRODUCTION
Marni Raprager
Lisa Rathgen
Angela Willcocks
ACOUSTICAL CONSULTANTS
Robert Fitzell Acoustics Pty Ltd, AAAC
EDITORIAL ASSOCIATES
Neil Duncan VK3AVK
B. App. Sci., Dip. Ed., M. Ed. Studs
Alan Ford FIAADP MBIM VK2DRR/G3UIV
Tom Moffat VK7TM
Jonathan Scott VK2YBN
B. Sc./B.E. (Hons)
Bill Thomas B.A.
Kerry Upjohn M.A. (Hons.)
TYPESETTING
Authotype Photosetters Pty Ltd
397 Riley St. Surry Hills 211 5076
Published by: Kedhorn Holdings Pty Ltd, an associated company of Westwick-Farrow Pty Ltd. **Ph:** (02) 487 2700. **Tlx:** AA71460 Sydney Whats New; International AA10101 Whats New.
Subscriptions: $39.60 Australia, NZ$57 New Zealand; overseas rates on application.
Australian Electronics Monthly is printed in 1986 by Offset Alpine, Cnr Wetherill & Derby Sts, Silverwater, NSW, and distributed by Network Distributing Co. *Cover price $3.30 (maximum and recommended Australian retail price only; recommended New Zealand retail price, $4.50). Registered by Australia Post, Publication No. NBP 7435. ISSN No. 0815-5046.

OFFICE:
Fox Valley Centre, Cnr Fox Valley Rd & Kiogle St, Wahroonga NSW.
POSTAL ADDRESS:
PO Box 289, Wahroonga 2076 NSW
ENQUIRIES
Advertising: John Whalen (02) 487 2700.
Editorial: Roger Harrison (02) 487 2700.
Technical: Only after 4.30 pm EAST, David Tilbrook (02) 487 1483.

Vic. Ad. Sales: Saddleton Cox & Assocs, 13 Stewart St, Mount Waverley 3150; (03) 233 7933.
Pam Stewart or Leon Trimmings
Melb Correspondent: Ian Boehm c/- Saddleton Cox, (03) 233 7933.
Qld Ad. Sales' Geoff Horne Agencies, PO Box 247, Kenmore Qld 4069; (07) 202 6813.
Sue Horne or Rosemary Lergessner
W.A. Ad. Sales: Hugh Scott, 20/415 Charles St, North Perth WA 6006; (09) 444 8587

COPYRIGHT © 1986, KEDHORN HOLOINGS P/L

CONTENTS →

World Radio History

ADVERTISERS INDEX

COVERS

Elmeasco ..... IFC
Scope ..... IBC
Icom ..... OBC

INSIDE

AEM pc board service 84
All Electronic Components ... 52
Amstrad 8
Avtek Electronics 11
AWA Rediffusion 5
C&K Electronics 7
Data Bridge 14
Dick Smith Electronics ... 29-36
Eagle Electronics 70
Electromark 20
Electronic Facilities 7
Electronic World 80
Emona 83
Energy Control 70
Entertainment Audio 15
Geoff Wood Electronics 38
GFS Electronic Imports 105
Jaycar 40-41
Logo Computers 13, 21
Microbee Systems 80
Scan Audio 22, 23, 25
Philips 83

SPECIAL NOTICE

This month you will have noticed our cover price has risen to $3.30. We aim to continue bringing readers the best quality and content in the magazine and this, along with substantial inflation over the past 12 months, necessitates the current cover price.

COVER

Our Supermodem project features this month, with the block diagram in the background. Design and production, Marni Raprager.

PROJECTS TO BUILD

AEM3012 FM band Antenna

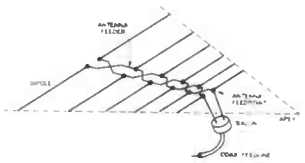

..... **38**

Our antenna features modest gain, a 'clean' radiation pattern for low multipath distortion and 'flat' coverage across the 88-108 MHz FM stereo broadcast band. It can be constructed by any handyman/hobbyist with modest tools using parts commonly available in hardware stores.

AEM4610 Super Modem — Part 2

..... **45**

This month we cover the pc board assembly and show the complete circuit.

STAR PROJECT

A low-Noise GaAsFET mast head preamp for the UHF Amateur and CB bands

..... **64**

This easily constructed project will improve your reception 'out of sight'.

CIRCUITS & TECHNICAL

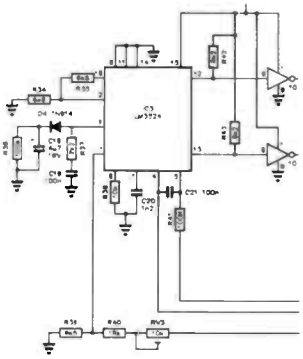

Practicalities

..... **98**

Dabbling with switchmode power supplies. Practical designs for 5 V and 12 V high current, regulated supplies from a 10-17 V source.

FOR STARTERS

Binary, Octal, Hex and BCD Number Systems

..... **96**

Theo Baitch concludes his explanations of the 'digital' number systems.

Data Sheets

..... **90-93,101**

Benchbook

..... **102**

A logic probe, alarm, etc.

PRACTICAL COMPUTING

Dabbling in the Dial-up Data Jungle

..... **9**

Jon McCormack follows-up last month's feature with a look at modems and dial-up information services ranging from bulletin boards to Minerva. ***A complete (as possible) list of dial-up bulletin boards and public information services is appended.***

Conversions, Calculations and Pointing the Way

..... **73**

Neil Duncan has developed a suite of programs useful around the shack, the study or the workbench.

The DSE Multitech 'Popular 500' Reviewed

..... **76**

Just another clone in the crowd, or something a little individual?

Apple Turnover Reviewed

..... **81**

This software/hardware package plugs into your IBM PC or compatible and allows you to read, write and format Apple disks.

BeeBuzz

..... **78**

This month, Tom Moffat looks at "The strange world of EDASM".

World Radio History

COMMUNICATIONS SCENE

Radio Communicators Guide to the Ionosphere — Part 6 57
HF predictions are covered this month — how they're generated and how to make use of them.

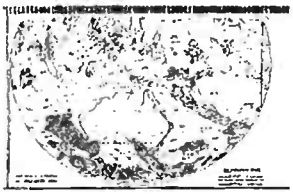

Notes for Commodore 64 Listening Post Operators 85
More or less a 'Help file'. Common questions and queries on this popular project answered.

CONSUMER ELECTRONICS

Pioneer's 'Six-pack' CD Player 26
Dennis Lingane looks at Pioneer's new 'juke box' compact disc player which can take up to six discs at a time.

AEM Product Review 28
A gadget for 'the gadget freak who has everything' — an in-car TV, AM/FM radio and cassette player!

FEATURE

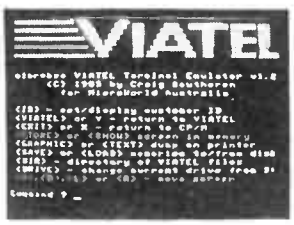

Dabbling in the Dial-up Data Jungle 9
Jon McCormack follows-up last month's feature with a look at modems and dial-up information services ranging from bulletin boards to Minerva to Viatel.

NEWS & GENERAL

News Review 6
New 'ultrasonic drive' motors.

Consumer Electronics 24
JVC's new CD player line-up.

Retail Roundup 37
Where to get kits, bits and various goodies.

Project Buyers Guide 37
Kits and bits for this month's projects.

Spectrum 55
New UHF CB from Philips.

Bytewide 71
Microbee releases new 68000-based machine.

New Product News 82
Fastest real-time image processor.

Admarket 22
Readers free adverts.

Back issues 22

Notes & Errata 56

Weller Crossword 72

Subscriptions 103

Letters 105

Printed Circuit Service 84

The Last Laugh 106

Contest Winners 37

SPECIAL OFFERS
Microbee Viatel Conversion 8
Get your 'Bee on Viatel.
Super Modem Offer 53
Our feature project, as a kit or ready-made.
Listening Post Package 54
Copy FAX, RTTY and Morse on your computer.

NEXT MONTH!

THE DIGITAL MULTIMETER
Modern digital multimeters now boast the sort of accuracy, features and functions that could only be dreamed of a few short years ago. Next month's feature looks at the 'state of the DMM nation', the fundamentals of the measurement techniques and what's available at present.

BUILD A 1 GHz FREQUENCY COUNTER
This project is so remarkably simple to assemble that we can hardly believe it ourselves. A counter would rate as an essential item these days in any service workshop, amateur shack or hobbyists' test instrument inventory. This project features an 8-digit readout and coverage up to 1000 MHz in three ranges.

THE 6000 POWER AMP
Here's what you audio enthusiasts have been waiting for! The David Tilbrook 'Ultra-fidelity' power amp module features new MOSFET output devices, a circuit topology not seen in print before and superb performance. Capable of over 200 watts RMS output it's more than a match for what digital audio can dish up.

While these articles are currently being prepared for publication, unforseen circumstances may affect the final contents of the issue.

World Radio History

New 'ultrasonic drive' motors boast 45% efficiency

Matsushita, the giant Japanese electronics corporation, the parent of National Panasonic (Australia), has announced the development of new motors which use ultrasonic vibrations for generating rotation of a shaft.

Disc-type ultrasonic motor.

Ring-type ultrasonic motor.

The 'ultrasonic drive' motor principle involves the generation of rotation by using the friction between a rotor and a stator, set vibrating with ultrasonic waves generated by electrically excited piezo-electric elements.

Although there has been much research within the industry over recent years, a practical level of energy conversion efficiency has not been obtained until now, Matsushita claim.

The company has developed two motor types: the disc type and the ring type. Both can offer practical energy conversion efficiencies of 45%, say Matsushita.

In comparison to conventional small electromagnetic motors, the ultrasonic motors have many advantages, such as simple structure, stable low-speed operation, quick speed-change response, controllability and high torque at low speeds. Possible applications include the auto-zoom mechanism in the lens of a video camera, industrial robots and vehicle electrical-electronic equipment.

New format for pro digital recorders

The development of digital technology puts a more sophisticated system at the hands of professional recordists. It allows more flexibility with the recording medium, allowing a wider range of possibilities and innovations for the engineer and the producer. This gives free rein to creative freedom and results in better quality recordings", says Andrew Horman of Sydney-based Klarion Enterprises, a member of the BCL group of companies.

The new format, dubbed "PD", claims advantages in sonic performance, reliability of error correction and more flexibility in comparison to previous format attempts by other companies.

Professional digital "Prodigi" audio recorders from the Japanese Otari Electric Company will soon be distributed in Australia by Klarion. The tape machines conform to the newly established standard format jointly developed by Otari, Mitsubishi Electric Corp. and AEG Aktiengesellschaft (formerly AEG Telefunken).

Otari's Prodigi series includes a 32-channel version on one-inch (25.4 mm) tape and a two-channel version which includes a time code track and up to two hours of recording. The PD format standardisation agreement is the result of years of negotiation among Otari, Mitsubishi and AEG, says Klarion.

Otari is a leading supplier of professional audio tape recorders and duplicators to the broadcast, recording and film industries around the world.

Klarion and BCL expect to consolidate their position ". . . in the forefront of audio technology" with this new Otari range.

Understanding ESD

Keytek Instrument Corp. has published three new application notes — AN.151, AN.153 and AN.171 — designed to help the test engineer understand the real nature of human electrostatic discharge (ESD).

These new documents are the result of extensive work done by KeyTek to explain and duplicate the actual ESD event which results when a person with a metallic object such as ring, bracelet, tool or key causes a discharge to occur through the object to an electronic device.

ESD measurement techniques, ESD computer modelling, and derivation of actual ESD equivalent circuit parameters are discussed. The resulting simulations are termed "True-ESD".

Anyone attempting to analyse failures of electronic equipment due to ESD will find this new information essential to their diagnostic efforts, according to the distributors. Copies of these application notes may be obtained, free of charge, from: **The Dindima Group Pty Ltd, PO Box 106 Vermont 3133 Vic.**

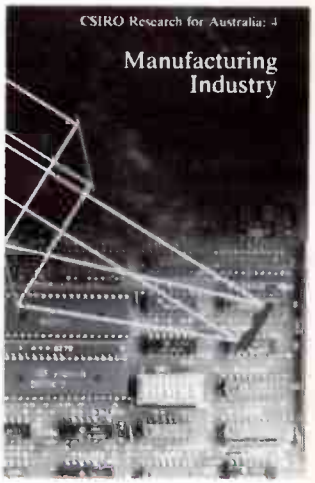

Spin-off products from CSIRO research

Leeds and Northrup Australia manufacturers and sells in over 27 countries worldwide an electronic temperature bridge and thermometer developed by researchers at the CSIRO's Division of Manufacturing Technology.

The device, which is capable of accurately measuring temperatures from -200° C. is described in the CSIRO's fourth booklet on *Manufacturing Industry*, which details instrumentation work for particular industries and includes other examples, such as Vision sensing systems, a portable voltammeter and mining industry instrumentation.

The booklet contains sections on metal forming, die-casting, machining etc, and work aimed at the electrical, electronic, communications, optical and chemical industries.

The booklet gives a simple, comprehensive guide to CSIRO research and gives details on collaboration with other bodies and contacts for more information.

World Radio History

Lock up *Electronically* with LORLIN

NOW! The latest in electronic security with RAL "Switchlocks" by Lorlin in standard, multi-keyed, single and double spring-return styles . . . combinations limited only by the user's imagination.

Lorlin "Switchlocks" are among the world's finest, offering multi-position, keyed alike, keyed differs, key trapped and multi-pole styles. Included also is a new "limited access" type, providing as standard, 4 keys, each offering a different number of positions.

C & K provides the best from Lorlin . . . rotaries in Mains, Printed Track, moulded construction, wafer types, adjustable stops — the lot . . . They're assembled locally to ensure prompt delivery of the limitless combinations available. Consider the advantages!

C&K COMPONENTS

C & K Electronics (Aust.) Pty Limited
15 Cowper Street, Parramatta, NSW 2150
PO Box 229 Parramatta. NSW 2150
Telephone (02) 635 0799 Telex AA23404
Agents Melb 598 2333/Adel 277 3288/Bris. 369 1277
Perth 275 5522/Hobart 34 2233/Launceston 31 6533

SyncNut™

(A Product of Shakeproof Division of ITW)

Designed for Mounting Heat Sinks and Printed Circuit (PC) Board Hardware

- Wave Solderable
- Maintains Interfacial Pressure
- One-Piece Construction
- Eliminates Loose Washers or Other Parts

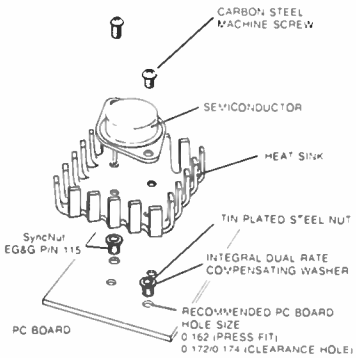

- Screws, semiconductor, and heat sink can be removed in the field. Soldered SyncNut stays in the PC board.
- Preassembly prior to installation and wave soldering can save time and money.
- Unique design prevents stripping of nut or overcompression of washer.
- Enclosed nut prevents wave solder contamination.
- Optional press-fit feature prevents wobble during handling and wave soldering.

Insert K844 on Feedback Card

LOW COST HEAT SINKS

673

The **673 Series** heat sink is designed for use with either the **TO-3, TO-66,** or two **TO-220** style devices where low height is required. This is a low cost series used in high density packaging applications.

225

The **225 Series** heat sink is a press-on, low cost unit for **TO-5** case devices. The **225** comes in four heights from 0.25" to 1.00".

637

The **637 Series** are high performance heat sinks designed for plastic power transistors. Solderable pins allow for vertical mounting on printed circuit boards. These heat sinks come in four heights.

Insert K766 on Information Feedback Card

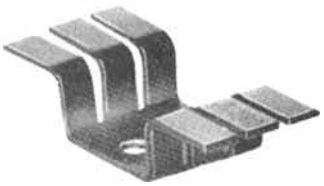

270

This Series is designed for use with plastic-cased **TO-220** style devices. The **270, 272** and **280 Series** heat sinks are low cost with a 0.375" height profile. The **272** heat sink is designed to accept two **TO-220** devices.

ELECTRONIC FACILITIES PTY. LIMITED

67 Dickson Avenue, Artarmon
Sydney, N.S.W. 2064 Australia
Telephone: 439 3786

Address for Correspondence:
P.O. Box 351
Artarmon, N.S.W. 2064

World Radio History

GOT A MICROBEE SERIES I/II/III?

GOT THE VITAL CONNECTION?

CONVERT IT FOR VIATEL OPERATION AND JOIN THE 'REVOLUTION' NOW!

If you're capable of wielding a soldering iron and prepared to spend an hour or so working on your 'Bee, then send for this

'Short Form' Conversion Kit

Comprising full instructions, a small printed circuit board, software on ROM or disk, manual and Viatel control key overlays.

FOR JUST $29.50!

Inc. post and handling

All you have to provide is a few common ICs, a resistor and some capacitors, plus a little time and effort – then your Microbee's ready to roll on Viatel!

We have only a limited quantity of these conversion kits left, so don't delay, fill out the coupon now and post it today!

This offer is exclusive to readers of Australian Electronics Monthly. Don't delay. Once we run out of stock, there are no further supplies available.

Take advantage of this offer today! Just fill out the coupon and send it, together with your cheque, money order or credit card details, to:

Australian Electronics Monthly
'Microbee Viatel Conversion Kit Offer'
PO Box 289, WAHROONGA NSW 2076

All mail orders will be despatched by certified post. Please allow for normal mail turnaround delays.

Name .....

Address .....

..... **Postcode** .....

Signature .....

(Unsigned orders cannot be accepted)

PLEASE RUSH ME . . . Short Form Microbee Viatel Conversion kit(s)

FULL COST: $29.50, inc. post and handling.

I require software on:

. . . ROM (2764 only)

. . . 3.5" disk

. . . 5.25" disk

I enclose payment by : .....

Credit Card No.: .....

Expiry Date: . . /. . /. . .

Cheque or Money Order

No: .....

Please make cheques or Money Orders payable to 'Australian Electronics Monthly'.

UK AMSTRAD USER MAGAZINE NOW AVAILABLE

- What's new in software, peripherals and accessories.
- In glossy full colour.
- April issue onwards.
- Just $3.95 at your newsagent.

No other system adds up to

AMSTRAD

FINDING IT HARD TO GET

- ★ SEMI CONDUCTORS
- ★ INSTRUMENT BOXES
- ★ 8-10 WATT RESISTORS
- ★ VERO & RISTON BOARDS
- ★ ALLTRONIC & DICK SMITH KITS
- ★ TRANSFORMERS
- ★ CB & MARINE RADIOS
- ★ CABLES, PLUGS, SOCKETS AND SPEAKERS
- ★ AMIDON IRON POWDER AND FERRITE CORES

(Amidon Catalogue $4 Post Free).

THEN SEE US!!

Ian J. Truscott's

ELECTRONIC WORLD

30 LACEY STREET CROYDON
(03) 723 3860/723 3094

Mail orders welcome.

World Radio History

Dabbling in the dial-up data jungle

John McCormack

In the last article I explained the principles behind the operation of modems and networks. With a little fundamental theory under the belt, no doubt by now you're anxious to venture into the practical side of things. Perhaps you've bought or built a modem, but who can you talk to? Is there a better way to talk to America than dialling ISD direct? (Can you afford the phone bill anyway?)

THE FIRST THING you'll need in order to get started with data communications on your computer, whether you're a casual hobbyist, a hacker or 'professional,' is a modem (remember ? — from MOdulator/DEmodulator), a sort of transmitter and receiver that works over the telephone lines.

There is positively a huge array of modems available on the market, all with different features and price tags. I'll just give a few points about modem features that you need to consider then its up to you to find the one that suits your needs, and wallet, best.

Pointers on modems

Often you hear the term 'dumb' and 'smart' applied to modems — with dumb modems you have to dial the number yourself, set the speed (baud rate) switches, etc and hang up the phone manually when you're finished (what a chore!). Smart modems will provide more or less complete control of the modem's functions, plus such niceties as automatic dialling of a number (which may be stored in your computer) — "auto-dial," automatic speed selection, automatic answering ("auto-answer") of incoming calls when left connected to the 'phone and automatic hang-up when a call is completed, etc (and that's just the *start*. . .) Dumb modems are generaly cheaper than smart ones because they have less of the automatic features.

Dumb modems available cost around $150 — $300 and will do the job quite nicely if you just want to dial up the occasional remote CP/M system or Viatel. There is no point in buying a smart modem if your communication software doesn't support them — most smart modems have no external controls and rely on special escape sequences (like those on dot matrix printers) to perform functions. If you're serious about data communications, a smart modem is the best way to go; I'll explain their benefits in more detail.

Features on 'smart' modems vary considerably and just because a modem has 'smart' written on it may not guarantee you'll get all the features you want. Most smart modems have an automatic procedure for dialling and making the connection. It may also monitor the incoming carrier signal and perhaps try to compensate for bad lines if necessary. The *Hayes Smartmodem* (the doyen of smart modems), for example, allows tone and pulse dialling or even a mixture of the two (in Australia our 'phone system is at a transition between the two). It also has an error checking system that will display error messages on your screen if things aren't going too well.

Owing to its features, Hayes' modems have set the standard on which other modems are built or compared. Most communications programs that support 'intelligent' modems use the Hayes standards. Many companies other than Hayes make 'Hayes compatible' modems and if you're after a good modem, these are the best ones to check out. (Note that some Hayes compatible modems are called "AT compatible" since "AT" is the escape sequence used by Hayes to allow the computer to give the modem commands.) ▶

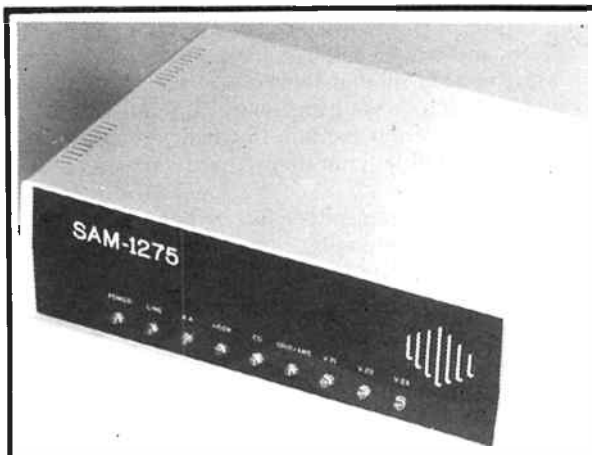

The SAM-1275, from Victorian manufacturer Pulsar Electronics, is a good example of a fully tricked-out 'smart' modem. It boasts real Hayes compatibility, Pulsar claim, plus auto-dial and auto-answer, internal baud rate conversion, dial-back security and operation on 300/300 baud (V.21), 1200/75 baud (V.23) and 1200/1200 (V.22), all full duplex. Viatel software is available for both Apple and IBM computers.

The SAM-1275 features full host computer control via an RS-232-C interface. It also features automatic sensing of the V.21/V.22/V.23 mode of incoming calls. It costs $750. More details from Pulsar Electronics on (03) 330 2555.

World Radio History

As we went to press, Microbee Systems announced their new low-cost auto-dial, auto-answer modem boasting full software control. Designed to operate with both Microbees and other computers, it features both 300/300 and 1200/75 baud full duplex operation. All you need is an RS-232-C port and compatible terminal software.

Locally designed and manufactured, it's been dubbed the 'Microbee Automodem'. Baud rates and answer/originate may be selected either from front panel switches or under host control via the RS232 line. Full auto-dial/auto-answer operation is possible under Microbee's Telecom software (versions 2.2/3.21) supplied with all current Microbee models. An optional customer upgrade gets you Bell operation.

The unit is powered directly from your Microbee, or optionally, from a 12 V/200 mA plug pack. It plugs directly into a standard Telecom socket and comes complete with a pushbutton 'phone which can be unplugged for automatic digital-only applications. It is Telecom approved. Check it out at your nearest Microbee Technology Centre.

You also need to decide whether you want your modem external (as an add-on) or in-built (hence the term, "In-modem"). Most in-built modems are hardware specific, so if you buy one and change your hardware you may run into problems. With an internal modem however, you stand a good chance that it will be completely hardware and software compatible.

If you get an add-on modem, check its power requirements; some (e.g: Microbee's Beemodem) require power from the computer and thus won't necessarily work on other computers without modification. The RS-232 interface is often a problem. Hopefully, you should be able to connect modem to computer without too much trouble. Should you need help, see *The Ins & Outs of RS232* in AEM Nov. and Dec. 1985. With the proliferation of cheap computers and 'renegade' implementations of the RS-232 standard, many modems makers these days opt for the 'minimal' approach and just use pins 2, 3 and 7 (TXD, RXD and GND) of the RS-232-C connector. Hallelujah for that!

Modem speeds are always a big issue. A year ago, if you had a 300 baud-only modem you were OK, but now, buying such a modem is a waste of money. You should get at least 300 baud (V.21) and 1200/75 (V.23). A nicety would be the possibility of later upgrading to 1200/1200 or 2400/2400 (the "V.22 bis" standard). More and more public access systems are switching to 1200/75 or 1200/1200 (some, very few, plan 2400/2400) so this is definitely a sensible choice. You may see 300 baud-only modems advertised very cheap (less than $100), but avoid the temptation as in 12 months time it's likely they will be virtually obsolete.

If you're going to be dialling around Australia only, then the modem you get will only need to offer the CCITT standard tones (see the "Relevant Standards" table in my last article). If you want to dial the rest of the world direct (USA, or North America in particular), then your modem will need to have 'Bell standard' capabilities.

One final point. When you buy a modem, see that it's Telecom approved. The approval number will be displayed on the unit somewhere. If you're adventurous enough to build your own then you should seek the required approval as it's an offence under the Telecommunications Act 1975 to attach any apparatus to a telephone line which is part of the public switched telephone network other than an approved device or an appliance leased from Telecom. The Telecom specifications relating to this sort of equipment include documents 1050, 1053, 1222, 1240, 1302 and 1364. You proceed by filling out Telecom's Form TS139 "Data and Non-Voice Equipment Directly Connected to the Telecom Network." A fee is charged.

The above I would adjudge as the prime, minimum considerations. There are many others to consider, dependent on individual requirements and applications beyond the scope of this article.

Communications software

Here again, communications packages available are as numerous as modems. Many good communications programs can be found in the public domain (i.e: they're free). When buying a software package it's wise to keep your future plans in mind. For example, if you have a simple dumb modem at present, but plan to upgrade to a smart one, will the communications software support both these modems? I'll list a set of features which I think are essential to get the most out of your modem.

The first thing to consider is *files* and *file transfers*. The communications software must be compatible with all the files on your system — this means that it must be able to send and receive files in formats compatable with your DOS (disk operating system). Secondly, the communications program must support the *Christenson file transfer protocol*. (This is just a standardised method of transferring data irrespective of your system). Programs such as XMODEM, MODEM7, XYAM and YAM use this system for sending and receiving files and one or other of these are used by almost every remote CP/M and public dial-up system in the world.

Thirdly, you must be able to "emulate" at terminal with your communications software. This allows the use of remote computers as if you were looking and typing to *their* screen and keyboard.

Other important features to consider include:

- Will the software capture text as it appears on the screen and hold it in a buffer to be saved later as a file?
- Does the program support auto-dial, auto-hangup and carrier detect — can it talk to the modem *itself* properly?
- What baud rates are supported? Are 'split' rates allowed on the RS-232 interface, e.g: 1200 bauds in and 75 bauds out? Speeds ranging from 300 to 9600 baud are essential, even if the modem itself does not support speeds this high — in some cases you may not need the modem but want to connect two computers direct, RS-232 to RS-232.
- Can parameters such as parity, stop bits, etc be changed.

World Radio History

- Can the software support a multiple file transfer in one command? e.g: "SEND *.COM"
- A useful feature is a "startup file", which is read-in on execution, which will set up parameters — such as speed, parity and stop bits — to best suit you. Some programs allow a set of parameters for each location you dial. For example, you give the command "DIAL VIATEL" and the speed is automatically set to 1200/75, data format to eight bits/no parity and the Viatel number is dialled.
- Does the program have buffering so that characters aren't lost with excessive speed?

A further important point to consider is *terminal emulation*. Facilities like Viatel require a special type of terminal that can display graphics and text according to escape codes from the main Viatel computer — this requires special software in the remote terminal (which would be your computer) to convert these escape codes to symbols and characters. Often you will find you have to buy a separate program for Viatel or other special services.

Who or what can you talk to?

Once you have chosen a suitable modem and appropriate software, you're ready to plug them in and venture into the exciting world of information technology. Always familiarise yourself with manuals and have a good working knowledge of your communications programs before you attempt to connect to a remote system. Remember that, unless you have a separate line, no one else in the house can use the 'phone. Thus, staying connected for a few hours can cause aggravation (always does at my house anyway!).

Let's look at the major installations or systems you can dial up.

REMOTE CP/M (RCPM) AND BULLETIN BOARD SYSTEMS (CBBS)

These are always the hobbyists' favourite. The large majority of RCPMs and CBBSs are run by hackers — dedicated hobbyists all. A number are maintained by businesses, such as Dick Smith Electronics' system and the Info-Centre bulletin board run by Paris Road Electronics. There are *dozens* of bulletin boards in every state of Australia, around 100 or so nationwide. In America, there are *hundreds*.

The hardware used by RCPMs is much the same as most people have at home — a personal computer, such as a Microbee, IBM PC (or compatible) etc, with an auto-answer modem, remote communications software and some disk drives, usually one or two double-density floppies; bigger systems may have 1-50 megabytle hard disks on line. Some long-established bulletin boards use a box full of S100 cards, and the occasional STD-bus system has been noted.

RCPMs are what the name implies: a *remote* CP/M system. When you dial up and make a connection, following some introductory stuff, you get the CP/M prompt "AO>". You can then type in most standard CP/M commands. (However, commands such as the *delete file* command, "ERA," have been removed to protect files). As well as the normal CP/M commands you can also transfer files to and from the system (called *uploading* and *downloading*). Usually, on top of all this, you can exchange messages with other users of the system.

Since CP/M is no longer the major microcomputer operating system (although it is very widely installed), most RCPMs now have programs for a wide range of machines. In fact, many no longer use the CP/M operating system itself. Thus, I shall refer to all these systems under the general name of "bulletin boards".

Messages and mail

One of the prime attractions of RCPMs, and the principle function of CBBSs, is *electronic bulletin boards*, and/or *electronic mail boxes*. The electronic bulletin board area — where, as you've guessed, bulletin board systems derive their name — is a 'public' area in the system where you can send messages to other (or all) users, place advertisements to buy or sell equipment or just ask people for help. When you first dabble among the dial-up bulletin boards, don't be afraid to just say "hello" via a message to other users (this will help dispel the rumor that all hackers are an unsociable lot who sit and stare at screens all day!)

Electronic mail boxes allow you to address messages to a specific user or users. Different systems have differing procedures and requirements, here — best found out by experience.

Unfortunately, in recent times a spate of idiots dialled up most of the bulletin boards around and left stupid messages, stayed logged-on for long periods and generally caused havoc with systems. These incidents lead to tighter restrictions on use, and in most cases users now have to register and pay a fee (around $10 - $20) in order to use the systems. This is not such a great inconvenience and in most cases it's worth the $10 or so for the value you can get out of it.

Most boards have a "visitor mode" which lets you look around, but won't let you send messages or download files. Most boards have specific fields or areas of interest, so look around before investing your money and decide which board has the best range programs suited to your interests or needs. ▶

AVTEK
Multimodem II

NOW WITH V22 (1200/1200 baud) OPTION

Australia's top selling modem does it again, with a V22 compatible option. Buy the best – the only modem that won't be obsolete next year! *And* get all the features the others can't offer:

1 All standards (V21, V22, V23) at the flick of a switch
2 Digital filtering for reliable transfer on noisy lines
3 Fully Viatel compatible 4 Unique expansion bus
5 From only $365.00 inc. tax.

Avtek (Electronics)
PO Box 651, Lane Cove 2066
Phone (02) 427 6688

World Radio History

Logging-on

Figure 1 shows a sample session with a bulletin board. Most have literally *megabytes* of public domain software, all of which can be downloaded to your system. Since most systems don't have enough space on their disks for all the software to be online at once, you may have to leave a message for the SYSOP *(system operator)* to put the volume you require onto the disk. Each volume contains a set of related programs and will fit on a standard CP/M disk (8").

Public domain software comes from four main sources:

(i) SIG/M — Special Interest Group on Microcomputers. Programs for all sorts of micros, not just CP/M.

(ii) CPMUG — CP/M Users Group. Much software quite dated now, but lots of CP/M programs. New volumes for other operating systems as well.

(iii) CUG — The "C" Users Group. (C is a programming language, now coming into wide use). This started out with BDS C, which was not a full C. More recently, the programs use the full, standard C.

(iv) Local — This is software that has been written locally and is found only on that system (but may run on many different computers, however).

A list of all the volumes from a specific source is always kept on line so you can download it and work out what volumes you want. The catalogues have names like "SIGMCAT.ALL" and are usually very large (100-200K). Often, the catalogues are split up into a number of smaller files.

Once you've looked through the catalogue and found which volumes you want, you leave a message requesting the SYSOP to put the required volumes on line. This takes about a day or so, thus call back then and download the programs you require. It's wise to check the program first to see if it's any use to you and it it is, check that it will run on your machine (i.e: there's no point in downloading a CP/M program if your computer runs MS-DOS).

Big squeeze, but no lemon

Because disk space is limited, many large files are "squeezed" down to a smaller size. Squeezing a file just encodes it in a way that is more efficient than straight ASCII storage — no information is lost, the file just becomes shorter. The benefit of this is that transfer time is shorter.

When you've downloaded the program to your computer you then "unsqueeze" the program, returning it to normal. There are two programs to squeeze and unsqueeze files: "SQ.COM" and "USQ.COM" — these programs are never squeezed so you should download them first: so you can unsqueeze squeezed files once you have downloaded them.

Not all files are squeezed — you cn tell if a file has been squeezed by a "Q" in the second letter of the file name ex-

Figure 1. A sample RCPM session. The first thing you are asked, after making connection, is the number of nulls you need (usually 0) and if your terminal can display lower case. The "CP/M debug" question is required by Telecom — Telecom dial-up systems must have some form of password. A little later on I "sign on" — by typing my name and then giving a personal password (only registered users can use this system). From then on I looked at some messages via the message sub-system, then went into CP/M (actually ZCPR), changed to User Area 5 and looked at the files there. These files are ones uploaded by users; there are many other files elsewhere on the system. You can download any to your system. Note that sysops are not renowned for their spelling or grammar.

```
EASTWOOD RCP/M AUTOANSWER ver 2.0  Feb 86
HOW MANY NULLS ( 0-9 ) DO YOU NEED?: 0
CAN YOUR TERMINAL DISPLAY LOWER CASE?: Y

What is the name of the CP/M debug utility?: ....
Your are connected to:

                  ***** EASTWOOD RCP/M (system A) *****
                     P. O. Box 129, Mitcham 3132, Vic
                      Phone (system):  (03) 870-4623
                        24 hours/day, 7 days/week
                            Sysop:  Mick Stock

Communications modes supported:
          V21 Originate, V21 Answer, V23 mode 1 (600/75 baud),
               and V23 mode 2 + Equaliser (1200/75 baud).


Connect at: 15:08:14 (Local time)
Tuesday, March 25, 1986

Please wait a moment....Signon 1.12 (2 Jun 85)
EASTWOOD RCP/M

Ctrl-C to skip, ctrl-S to pause.

          ***** New Features file last updated:  28/02/86 *****
          ***** Special users file last updated: 30/03/85 *****


What is your first name ? jon
     And your last name ? mccormac

Checking users file...

Type your password ? XXXXX    ok
15:08:34 Tuesday 25/03/86
You are caller 7216

--------------------------------------------------------------
**    Communications line problems? - try the CHGBAUD command!  **
--------------------------------------------------------------
**    Ctrl-S pauses output, any key to resume.     Ctrl-K stops **
**    MINIRBBS functions, Ctrl-X or Ctrl-C stops most others.   **
--------------------------------------------------------------

Checking for messages to you.


Press letter of your choice
M to see the menu ? m

Signon Options:
 a Alter your password.
 b View your signon statistics
 c Go to CP/M.
 d Deposit a comment.
 e Read NEW FEATURES file.
 f Go to message subsystem

 g Sign off of the system.
   Toggle expert mode.
Press letter of your choice
M to see the menu ? f

East Ringwood RCP/M message sub-system [v3.2  21/02/85]
(Based on MINIRBBS vers 2.7)
Name: JON MCCORMAC

Active # of msg s:  23
You are caller # :  7216
Next msg # will be: 306

Function [E,R,S,F,G,P,X,O,T,B (or ? if not known)]??

Functions supported:
S--: Scan messages       R--: Retrieve message
E--: Enter message       F--: Kill message
P--: Prompt (bell) togl  X--: eXpert user mode
O--: Quick summary       G--: Go to CP/M
T--: Time on system
B--: Read bulletin on latest software

Commands may be strung together, separated by semicolons.
For example, "R;123" retrieves message # 123.
For forward sequential retrieval, use "+" after Msg #.


Function [E,R,S,F,G,P,X,O,T,B (or "?" if not known)]?r

MSG # ( 2 - 305 ) to retrieve (C/R to end)?300+


Use Ctl-S to Pause, Repeated Ctl-K's to Abort.
```


World Radio History

tension — SIGMCAT.ALL squeezed is SIGMCAT. AQL.

While there are thousands of public domain programs, only a few of them are of any worth (remember the old saying about getting something for nothing?) Some however, are very well written and are worth getting. Unfortunately, because the people who wrote the programs did it for free, many are undocumented (or the documentation is poor) and many have bugs (sometimes dangerous ones). So, remember to always expect the worst!

The problems with public domain software point to a few tips if you upload you own software:

- Always upload the source code (never upload just a ".COM" file.
- At the TOP of the source code always put:
  - **(i)** The name of the program.
  - **(ii)** A one-line description of what it does.
  - **(iii)** The date and version number of the program.
  - **(iv)** Your name and full address.
  - **(v)** A statement saying that you give permission for release into the public domain.
- Always make sure the source code is well commented and that the program structure is easy to follow — avoid non-standard commands or machine specific instructions if possible (this makes it easy for other people to use the program on different machines). ▶

```
Msg #  300  Date entered: 23/03/86  From: GRAEME TOOGOOD
To: BOB GREEN  About: LOST CHARS IN TERM. MODE

Hi Bob,
        I've found that answering the 'How many NULLS?
prompt at loggon with 5 instead of 0 solves our problem
of lost chars at 1200/75 Baud. Could be that less than 5
nulls is ok, but I've only tried it with 5 so far.
                Cheers,
                        Graeme Toogood.

Msg #  304  Date entered: 24/03/86  From: JOHN FORT
To: MIRKO FLUHER  About: PRINTT.C

Mirko,  Have you considered....

    do{
       choice = getchar()
    } while (! (isalpha(choice)) )

    switch(choice) {
                        bye,  John Fort.


Msg #  305  Date entered: 24/03/86  From: MIRKO FLUHER
To: JOHN FORT  About: PRINTT.C

Hello John,     IT WORKS ..!   Itt just took me a few minutes
to realize that I needed semicol. and to discover that we
just can't have them in these messages... I'll keep in touch.
     Regards, Mirko
PS: I can't delete your message.
PSS: I would never have thought of isalpha ... I had a little
look at ABC p.323 "Nonzero (true) is returned" '' THANK YOU.

** End of messages **

Function [E,R,S,I,G,P,X,O,T,B (or '?' if not known)]?g

The time now is (Hrs:Mins:Secs).... 15:09:38
You've been on the system for..... 00:01:04

You may leave any comments via SIGNON, TOS, or BYE
Now, back to CP/M...

A0>a5:


      Drive A5:  files: 16  space used: 234k  (174k free)
-MISC    .A05  2k : EDIT  .CPM  2k : 0X10UTES.LBR  6k : SVMODEM9.COM
AUTOANSW.MOC 12k : EDIT  .DOC  8k : SE0I022 .LOB 14k : WSPATCH .DOC
BATSHIP .MWB  8k : LIFE  .BML  2k : SPEAK   .LBR 26k : XDATE   .LBR
CATM    .LBR 18k : PRINT .LBR 14k : SPZ25   .LBR 58k : YAM-E64 .COM

A5>bye

15:10:01 Tuesday 25/03/86

JON MCCORMACK was on the system for 00:01:27.
DON'T hang up yet.....


Want to leave a comment (Y or N) > n
Good-bye, call again..
```


The PC Solution

The Better Alternative is the NCR range of personal computers which runs the whole range of industry standard software. That's just the start! With an NCR PC you also get:

- ❑ **Higher performance.** The PC6 is fully PC/XT compatible but runs up to 38% faster. The PC8 is fully PC/AT compatible, but runs at a much faster 8MHz.
- ❑ **A better keyboard.** Separate numeric keypad and cursor keys – essential for serious spreadsheet users.
- ❑ **More expansion ability.** PC6 memory can be expanded to 640K *on board*. 8 expansion slots as against only 5 on a standard PC.
- ❑ **A clearer screen.** Higher resolution (600 x 400) in both colour and monochrome.
- ❑ **More software.** DOS, GW BASIC and a superb set of interactive tutorials.
- ❑ **Better support.** 12 months warranty through over 40 NCR field service offices Australia-wide.

With an NCR PC you'll find the "extras" the others want to sell you are probably standard equipment!

LOGO

LOGO Computer Centre

Suite 305, Henry Lawson Business Centre, Birkenhead Point, Drummoyne. Phone (02) 819 6811
PO Box 389 Drummoyne 2047 NSW
WHEN YOU WANT THE BEST!

World Radio History

- Try to make the software as bug free as possible (difficult, this one!)
- As well as the source, upload full documentation — the best program in the world is no good unless you know how to use it. Always include a list of known bugs as well so at least users have been warned!

If everybody followed these rules then the world of public domain would be a better place. In Australia there is relatively little home-grown public domain software so don't be afraid to upload any of your programs (as long as they follow the rules above) — who knows someone else may find them of value too.

Who you gonna call?

Figure 3 lists the phone numbers of most of the known bulletin boards in Australia, plus the odd New Zealand one. Unless you can afford it, avoid the temptation and keep those STD/ISD calls to a minimum! You can get trapped. The data format for most bulletin boards is:

- Eight (8) data bits
- One (1) stop bit
- Even parity

Some boards operate at 300 baud only, but most now have 1200/75 and 300. A few even support 1200/1200 (1200 full duplex) and 2400/2400. If in doubt, try 300 baud first and then check to see what other modes are supported. Before long however, I speculate all bulletin boards will have 1200/75 and many will boast 1200 and/or 2400 full duplex operation.

VIATEL

Viatel is a Telecom-provided videotex system. It is based on the English 'Prestel' system and isn't the only videotex system running in Australia. Agtex was one of Australia's first such systems, set up for the rural community and operated by the Victorian Department of Agriculture (originally, Agtex was called 'Farmhand'). There are a number of other specific videotex systems, but Viatel is the most general.

As I explained in the last article, Viatel requires a 1200/75 baud modem and a Viatel terminal or Viatel terminal emulator program which you run on your computer. To become a registered Viatel user you send off a form to Telecom, available from any Telecom Business Office, or just 'phone a Telecom Business Office and state your intentions to use Viatel. A few days later you are sent back a 'special number' and a password (which you can change the first time you log on to Viatel, and as often as you see fit).

Viatel is, in effect, an Australia-wide 'electronic magazine-cum-catalogue-and-buyers-guide', consisting of numerous 'pages'. You'll find a few pages 'run' by Telecom, but the more interesting ones are run by "Service Providers" (SPs) who are usually large or small companies.

UPLOADING AND DOWNLOADING

Many people new to bulletin boards have trouble uploading and downloading software. Almost all bulletin boards use the Christenon protocol. Ward Christenson established and ran the first public access dial-up system in America (Chicago, 1978) and wrote a program called MODEM7 to allow the users of his sytem to exchange software.

All that was a long time ago, and now everyone uses this system to transfer files. There are two main programs used on RCPMs: XMODEM and XYAM. XYAM is slightly better than XMODEM as it allows multiple file transfers from a single command. I won't go into its operation — aLL RCPMs have a 'HELP' command. Type it the first time you get on and, if possible, "capture" the text as it is printed so you can study it later while you're off line.

Viatel is not free (after all, it is Telecom, old chap!). For domestic users, the fee is currently $12.50 per year (about to go up to $30 per year); for business users, $150 per year. On top of this, each time you call the Viatel computer you pay the local charge of 16¢ plus a connect charge of 8¢ per hour during business hours and 5¢/hr at other times. In addition, while viewing some pages costs nothing, looking at 'usable' pages costs money too, ranging from one to 50 cents, but can be up to $5.00 per page. Casual use on, say, a weekly basis doesn't cost much, from experience, but regular use of services can start to add up, which means you must be able to justify it on some basis.

For myself, I am still very sceptical of the worth of Viatel. Basically, I have found it a bit of a disappointment. To date, I have found very few items of information are worth dialling-up for at all. Telecom assures us it's early days yet and items on how rapidly the service providers and subscribers are growing keep appearing in the press.

You use Viatel through a series of menus. The menu system is easy to use at first but, after I became familar with it, I found it far too tedious after a few minutes connect time. To get to any useful information you have to read through far too many menus. Once I dialled up Viatel and wanted to know the weather forecast for Melbourne for that day; a simple enough request. About 10 menus later (each taking several seconds to come up and be drawn) I finally got to the Melbourne weather menu only to find that the forecast was not available for that day! You can of course, go directly to a set page by giving it's number, but who wants to remember a six digit number for every useful page of information — that's why we have computers, so we can forget those things! A directory is printed by Telecom, but the last comment still applies.

The feature of Viatel I found useful is its ability to send electronic mail and Telex to any other Viatel (or telex) user in Australia, all for 5¢ per message ($1.75 for telex). However, even here I found the system complex and difficult to use. You can't just say send a message to "Jon McCormack," you have to go and look up the person's name and find out their "Viatel Number" (10 digits long), write this down (on real paper) then go back to the Mail page and type in that per-

Modems
Supa Smart Hayes modems
V.22 Autodialler modems
Viatel & Bulletin Board
V.21 & V.23 Multi Modem
SPECIAL OFFER
$169.00
• Videotex software • Auto answer
• Board rate converter
DATA BRIDGE LANs - X-25 - Modems
CORPORATE NETWORK COMMUNICATIONS SPECIALISTS MELBOURNE (03)5780814 SYDNEY (02)8196474
APA 1344 DAB

World Radio History

son's number. Even entering your message is hard. For a start, 75 baud limits your typing to a very slow speed. Secondly, you can't use the [RETURN] key to terminate a line of input as you do with every other system in the world. No, in Viatel you end a field with a '#'. Perhaps from a non-computer users point of view all this is OK, but not for the computer literate.

If you want to cut your Christmas card bill this year, it may well be worth becoming a Viatel subscriber (provided your friends and relatives are also subscribers!). You can send a Viatel Christmas card anywhere in Australia for the same cost as the electronic mail fee. Last Christmas the service had a variety (admittedly, limited) of designs (each a single screen) on which you could write a limited message.

The advantage of Viatel's electronic mail is defeated by its other problems anyway — unless you need to use the system for something every day, you're unlikely to ring up to see if you have mail. Thus, it may be several weeks before a receiver reads a message sent to him/her. (I access Viatel about once a month).

Overseas, videotex systems have worked (but after a slow start, admittedly). Prestel in the UK has a quarter of a million users (in a country of 55 million people) and France's Teletel has over half a million. Initially, the operators were willing to offer cheap rates and encourage people to use the service. However, it's early days yet for Viatel.

As with most services, only you can assess its worth to you; 'horses for courses,' if you like. The Microtex 666 pages give a variety of games; principally for Commodores, but they have some for other systems as well. You can 'toy' with your bank account — providing you belong to one of the few banks on Viatel but you can't make transactions. You can check out holiday packages with travel agents on Viatel, and without the pressure of a salesperson blowing in your ear! You can shop through Viatel. You'll find Dick Smith Electronics under 'Cableshop'. If you're a 'technological voyeur', I guess a Viatel subscription is mandatory!

For Viatel to be ultimately successful, Telecom needs to sign-on a greater number and variety of service providers. There is some talk of putting the Yellow Pages (and perhaps the White Pages) onto Viatel. However, it may be some time before this happens. There is also talk of using a special 'artificial intelligence' type program to eliminate the heavy need for menus. I'll wait and see, but I won't hold my breath. ▶

VIDEOTEX A MAJOR SUCCESS IN AUSTRALIA

"The growth of Videotex in Australia over the past few years has been quite remarkable; the technology is doing better here than just about anywhere in the world", is the assessment made by David Hurley, Chief Executive of the Visionhire International Group of Companies.

Mr Hurley was in Sydney recently to review the UK-based company's Australian operations, and said he was "very impressed" with Visionhire's solid position on the Videotex scene.

"Visionhire has a very comfortable 50% share of the Videotex market here, and that market continues to grow," he said.

"I believe a major factor in Videotex's success in Australia is the fact that it is a young and forward-thinking country whose people are always ready to embrace new technology. This is not always the case in other areas of the world, where resistance to change and the reluctance to try new technologies have been a drawback to the full acceptance of Videotex."

Even in the UK widespread use of Videotex has come over a long time, and then mainly in the business sector, in contrast to the Australian experience where it is finding ready acceptance in the larger domestic consumer market.

INTRODUCING THE TIME-SAVER/MONEY-SAVER CIRCUIT-BOARD-ARTWORK SOFTWARE

For only $1,250 smARTWORK™ lets the design engineer create and revise printed-circuit-board artwork on the IBM Personal Computer (or equivalent).

Forget the tedium of taping it yourself or waiting for the technician, draftsperson, or the CAD department to get to your project.

smARTWORK™ (Version 1.20) is the only low-cost printed circuit-board-artwork editor with all these advantages:

- ☐ Conductor spacing always correct.
- ☐ Lines don't become too narrow.
- ☐ Connecting lines do not intersect other conductors.
- ☐ Automatically seeks and draws shortest route between conductors.
- ☐ Quick correction and revision.
- ☐ Production — quality 2X artwork from a pen-and-ink plotter.
- ☐ Prototype — quality 2X artwork from a dot-matrix printer.
- ☐ Easy to learn and operate.
- ☐ Single-sided and double-sided printed circuit boards up to 10 x 16 inches.
- ☐ Multicolour or black-and-white display.
- ☐ Library storage and retrieval of your own commonly used layouts and pinouts.

- ☐ Block movement and rotation for on-screen cut and paste editing.
- ☐ Place text on either board layer.
- ☐ Separate silk screen layer.

System Requirements (smARTWORK™ Version 1.20)

- ☐ IBM PC, XT or close compatible with 384K RAM, 2 disk drives.
- ☐ IBM Colour/Graphics Adaptor with RGB colour or B & W monitor.
- ☐ Epson MX/FX80/100 dot matrix printer.
- ☐ Pen-and-ink plotters: Houston Instrument DMP42, 52 Hewlett Packard HPGL 7470, 75, 7580, 5, 6.
- ☐ Microsoft Mouse (optional), and other compatibles.

This revolutionary software package originates from the U.S.A. where it has a proven record for reliability.

Entertainment Audio of Adelaide are actually manufacturing the product locally, which has obvious benefits:

- ☐ Quicker availability of new releases and upgrades.
- ☐ Experienced engineers available to help or answer enquiries.
- ☐ For a FREE TRIAL of smARTWORK™ and further information, ring (008) 88 8414.

Entertainment Audio P/L
A VILLAGE ROADSHOW COMPANY
59 KING WILLIAM STREET,
KENT TOWN, S.A. 5067
Phone (08) 363 0454

WINTEK Representing WINTEK Corporation (USA) in Australia

World Radio History

VIDEOTEX SERVICES

Viatel is the major public videotex service currently available, carrying a broad range of service providers covering a wide range of fields and services. At present, Viatel has around 14 000 subscribers each of whom, on average, access around 3000 pages each month. There are also a variety of 'specialist' videotex services to which one can subscribe, providing information on line targetted to specific user groups.

DTX Australia, a Perth-based group with offices in the major capitals, provides an Australia-wide videotex service boasting some 40 000 pages of public information giving details on news, weather, sport, exchange rates, restaurants, theatres, motoring etc. They also provide specialist "closed user" services which gives particular subscribers access to information on subjects such as mining, exploration, manufacturing, accounting, banking, health and scientific research. Electronic mail is also available through DTX's videotex service.

Examples of the specialist videotex services around include The NSW Fish Marketing Authority with a service called "Fishnet" (how catchy!) the Fairfax-Syme Publishing Group with a business finance and money market service called "Moneywatch", the West Australian Totalisator Board's "Viabet" betting system and the Royal Australian Institute of Architects' "Archidata."

A number of firms are distributing dedicated videotex terminals priced between about $1000 and $2000 +, depending on features and facilities. Below is illustrated DTX Australia's videotex terminal, typical of the sort of equipment on offer. The DTX terminal includes the keyboard/modem decoder unit and DTX 2000 colour monitor for $998 (the 'phone shown is not included). The modem decoder plugs straight into the Telecom 'phone socket and provides 1200/75 baud videotex standard operation. An RS232 port permits attachment of a printer for obtaining hard copy. It has a full-size standard QWERTY keyboard and an RF output which can be attached to an ordinary TV set if you wish to use such as a monitor. Full editing facilities are provided, both on-line and off-line, and the unit features one-key logoff.

The Data Bridge 'multi modem' is a low-cost unit offering both 300/300 and 1200/75 baud operation. With an optional baud rate converter the unit can interface to computers which require a 1200 baud full duplex interface. Data Bridge say the unit is ideal for videotex users. It has an integral power supply and does not depend on supply from the host computer. Contact Data Bridge on (03) 578 0814.

ACSNET

Although the Australian Computer Science Network, ASCnet, is not the most widely used network in Australia, I believe it deserves a special mention here because it employs one of the easiest and best pieces of networking software around — and it's Australian-made, too.

ASCnet is at present used mainly by educational and technical bodies, but recently more business and even computer hobbyists are discovering its benefits. It is mainly accessed on multi-user UNIX machines. At present, not many people have access to such powerful hardware for home use. However, with the continued advancement in VLSI technology (with chips such as the 68020 and 30032) it may not be too long before a great many more people enjoy the pleasures of UNIX on their personal computer. (UNIX is a multi-user, multi-tasking operating system originally developed for use on large computer systems).

Using facilities such as mail is easy — you can send mail to anyone on ACSnet (anywhere in the world, if necessary), just by giving the command:

mail user@host.country

Where "user" is the username of the person you wish to send the letter to; "host" is the host machine name on which the person has an account, and "country" is the country they are in. For example, I have an account on a machine called "bruce" (no jokes please), on which my username is "jonmc". So to mail a message to me you would type:

mail jonmc@bruce.OZ

The "OZ." is not required if you are mailing from within Australia. There is also provision for mailing to specific machine even if you don't know the name of anyone there.

As well as electronic mail, ACSnet provides file sending and a "news" service. You can "subscribe" to a number of different news groups and post your own news items in any news group. News comes from all over Australia and all over the world (pretty powerful, eh?).

Tapping in

Sydney's dial-up public access UNIX system, "RUNX", allows users to take advantages of ACSnet's features (you have to pay a small fee to become a registered user), so if you're interested, why not give them a call?

World Radio History

AUSTPAC, MIDAS, MINERVA ET AL

Austpac is the Australia-wide packet switching network, which is maintained by Telecom. Austpac will handle most baud rates and protocols. You dial-in to it via a special number (see Figure 1). Once you're onto Austpac, data transfer is quite simple. Austpac allows communications with overseas networks at far cheaper rates than simply phoning the site (via ISD) direct.

The Overseas Telecommunications Commission (OTC) runs *Midas*, Australia's overseas packet switching system. They also operate *Minerva*, an international electronic 'messaging' or mail system. To become a registered user of Midas and Minerva you contact your local OTC office and they'll give you a registration from. Midas has no joining fee — you pay only for access time.

Getting access

You can access Midas via a dedicated, Telecom-installed, line (very expensive for the average hacker). If you live in Sydney, you can dial the network direct or you can connect via Austpac (which you can, in turn, connect to via 'the phone for just the local call charge). Midas via Austpac is cheaper, but you have to pay for Austpac as well, so it ends up about the same cost as dialling Midas direct.

You can dial up 300, 1200/75 and 1200/1200 baud lines to access Austpac and Midas. Once you are through all the formalities of connecting to Midas (passwords and the like). you can eventually specify who you would like to talk to by giving an "X.121 Address" — a huge number (12 digits long), akin to dialing ISD. You can get a list of these numbers from OTC. The first four digits of the number are the Data Network Identification Code (DNIC) and are used to specify which network in what country you want to access. The next eight digits specify the Network Terminal Number (NUN) — this is the actual node you want to talk to. Figure 3 shows the DNICs for most of the packet switching networks in the world.

Figure 2. International packet switching networks accessible through OTC's Midas.

Country	Network	DNIC
Australia	Austpac	5052
	Midas	5053
Austria	Radio-Austria	2329
	Datex-P	2322
Belgium	DCS	2062
Canada	Teleglobe	3023
	Datapac	3020
	Infoswitch	3029
Finland	Datapak	2442
France	Transpac	2080
	NTI	2081
Germany	Datex-P	2624
Hong Kong	1DAS	4542
	DAS	4544
Japan	Venus/P	4408
	DDX/P	4401
Luxembourg	Luxpac	2704
New Zealand	Pacnet	5301
Norway	Norpak	2422
Singapore	Telepac	5252
South Africa	Saponet	6550
Sweden	Telepak	2405
Switzerland	Telepac	2284
	Datalink	2289
UK	1PSS	2341
	PSS	2342
USA	ITT	3103/3107
	WUI	3104
	Tymnet	3106
	Telenet	3110/3127
	RCA	3113
	TRT	3119
	Uninet	3125
	Autonet	3126
	Alaskanet	3135

What's on

There are a number of different things you can access via Midas, but probably the most important are the big US databases — Lockheed's *Dialog* and SDC's *Orbit* being the biggest two. Dialog is not just one database, it is in fact *hundreds* of databases, all of which are accessible through the general Dialog connection. Subjects are available on virtually anything, from scientific through to commercial topics.

To understand how to use these databases some knowledge of "query languages" is required. I won't go into detail here but most query languages are easy to learn. When you register with the database you are given a comprehensive instruction book of the features of the system, which includes the query language.

Which arm and which leg?

After all that, you may be wondering how much it will cost to actually connect to say, the Dailog database through Midas, via Austpac. OTC charges $10.80 per hour to use Midas through Austpac (regardless of where you want to connect to). Connecting directly to Midas costs $22 per hour. On top of this you are also charged $110 per 64K (maximum) of data transferred. To access Austpac you need an NUI (Network User Identifier: buzz phrase for a password) which costs $50. On top of this you pay between $4 and $20 per month, depending on what area (in Australia) you want your NUI recognised over — i.e: if you want to be able to access your Austpac NUI from anywhere in Australia (unlikely, unless you travel a lot) you pay the maximum amount — $20.

Once you have paid all this you then have to pay to register on the services you wish to access (e.g: American databases). Not a cheap business when all costs are added up, and of little use to the home enthusiast who just wants to poke around. For scientific researchers, businessmen and journalists (those who can afford it!), the benefits are enormous. It's a matter of only using those services which will provide benefit to you. Evaluate your needs, then decide if Austpac or Midas will solve your problems in a cost-effective way. If you just want to find out the latest news from the US on the "Amegia", for example, you're better off to use something like ACSnet (newsgroup net.micros.amegia).

THE FUTURE

Predicting the future in data communications is difficult, because the industry is changing so fast. Faster modems will be with us soon and 2400 baud full duplex will become quite common. It's interesting to note that Bell Labs in the US (now called AT&T) have said that it will be able to handle up to 56 000 baud on a standard telephone line in the future (now that would be something!). However, that's still a few years down the track.

But wait! Just when you thought data communications was getting boring — with Telecom's introduction of the Integrated Services Digital Network (ISDN), almost anything may be ▶

World Radio History

possible. ISDN is an all-digital network, intended as a replacement for the standard 'phone which we use now.

The details of ISDN are not yet complete, but basically, the ISDN plug will replace the telephone plug and allow all sorts of communiction — voice, data, pictures, video, you name it — and all down the ordinary old Telecom 'phone line. The thing is that the speed of the network will be quite fast — you will be able to transfer you computer's entire memory down the line in less than a second, and you could be talking on the 'phone at the same time too!

One of the interesting points about ISDN is that it's completely digital — no need for modems (could put a lot of people out of business). All the data is transmitted directly in digital form. This also means there is a lesser chance of error, due to 'noisy' lines, sometimes a problem with modem-based communications.

ISDN won't be fully implemented until 1990, but Telecom is releasing technical information on the system at present, and all ready manufacturers are toying with designs for all sorts of incredible devices to connect to ISDN. We should see one machine that is a computer, phone, video system, facsimile (FAX) transfer system, 'phone book (Yellow and White Pages), and all sorts of other things, that plugs into that little socket on the wall of everybody's home.

It's not the end of it

So there you have it — once you've bought that modem I'll guarantee one thing: a dramatic increase in your phone bill! It's very easy to get 'hooked' on data communications and before you know it those local and STD (ISD?) calls have taken their toll (no pun intended). However, data communications has a lot of benefits. Never before has the 'man in the street' had so much information at his fingertips. If your PC doesn't have enough power — easy, dial up a bigger one. If you're thinking about going into the 'communications business', why not give it a try; dial up a bulletin board, at least you'll be able to communicate with other computer users and, who knows, maybe someone else out there has had problems with that same 780XYZ chip you can't seem to get workin. . .?

So, I'll leave you with something to think about: the way things are going, it seems to me that all too often I'm dialling-up a number of different computers to get the same information. One number for Viatel, one for the RCPM, one for Austpac. Wouldn't it be great if you could dial just one number and access all the different services you wanted. . . maybe ISDN will be the answer — I can't wait for 1990.

Figure 3. Public access dial-up systems. This list was as complete as we could make it prior to publishing, apologies for any omissions. Please note the operation times. Most require a 'password' before you can access beyond the 'visitor' area. A membership fee (around $10-$20) gets you one which, if required, is shown with the listing.

A.C.T.

SYSTEM NAME & PHONE NUMBER	OPERATIONAL TIMES
Canberra BBS Phone: (062) 88 8318 Sysop:	24 Hours EST
ACT Apple RBBS Phone: (062) 31 9462 Sysop: Ian Warren.	Daily: 9 pm-9 am
MICSIG RCPM Phone: (062) 85 1026 Sysop: Ross Elliot.	24 Hours
PC Exchange IBBS Phone: (062) 58 1406 Sysop: Phil Harding.	24 Hours Registration $10
DSA-80 Phone: (062) 41 4395 Sysop:	24 Hours Registration $22
Treasure Trove Phone: (062) 85 1864 Sysop: Colin Schmutter.	24 Hours

NEW SOUTH WALES

SYSTEM NAME & PHONE NUMBER	OPERATIONAL TIMES
ABCOM IBBS (ABCOM-IBBS) Phone: (047) 36 4165 Sysop: Ben Shariff.	24 Hours
Apple Users Group BBS (AUG-BBS) Phone: (02) 451 6575 Sysops: Matthew Barnes and Andrew Riley.	24 Hours
AUGUR BBS (Breadboard BBS) Phone: (02) 661 4739 Sysop: Mark James	24 Hours
Austborne (Osborne) RCPM (OB-RCPM) Phone: (02) 95 5377 Sysop: Daniel Moran.	24 Hours
Sydney TRS-80 User Group RTRS (STRUG-RTRS) $10 + $20 PA Phone: (02) 332 2494 Sysop: Michael Cooper.	24 Hours
Sydney C64 BBS Phone: (02) 664 2334 Sysop: Graham Lee	24 Hours
Contact BBS (DATE) (CONTACT-BBS) Phone: (02) 550 1004 Sysop: Steven Williams.	Weekdays: 9am-11pm Weekends: 24 Hours.
C64 BBS (Palantir BBS) Phone: (02) 451 6576 Sysop: Steve Sharp.	24 Hours
Dick Smith Electronics BBS (DSE-BBS) Phone: (02) 887 2276 Sysop: Ian Lindquist.	24 Hours
Keeboard TBBS Phone: (02) 629 2230 Sysop: Philip Keegan.	Daily: 6pm-8.30am
Mi-Computer Club BBS (MICC-BBS) Phone: (02) 662 1686 Sysop: Andy Farkas	24 Hours EST
Micro Design Lab RCPM (MDL-RCPM) Phone: (02) 663 0151 : (02) 663 0150 Sysop: Stephen Jolly.	24 Hours EST
Omen RTRS (OM-RTRS) Phone: (02) 498 2495 Sysop: Ted Romer.	Monday to Thursday: 1630 to 0900 EST. Friday to Monday: 1500 to 0900 EST.
Prophet RTRS (PROPHET-RTRS) Phone: (02) 628 7030 Sysop: Larry Lewis.	24 Hours EST

World Radio History

RCOM BBS Phone: (02) 667 1930 Sysop: Simon Finch.	24 Hours *NEEDS 'RTERM' ON C 64*
RUNX UNIX System Phone: (02) 487 2533 Sysop: Mark Webster.	24 Hours 300 baud
RUNX UNIX System Phone: (02) 487 1299 Sysop: Mark Webster.	24 Hours Voice Line
RUNX UNIX System Phone: (02) 487 1860 Sysop: Mark Webster.	24 Hours 1200/75 baud
RUNX UNIX System Phone: (02) 48 3831 Sysop: Mark Webster.	24 Hours 1200/1200 baud
Sydney PC IBBS Phone: (02) 238 9034 Sysop: Geoff May.	24 Hours
Tesseract RCPM (TES-RCPM) Phone: (02) 651 1404 Sysop: John Hastwell.	24 Hours
Texas Instruments (TEXPAC) Phone: (02) 560 0926 Sysop: Shane Anderson.	Mon: 1900 to 0700 Tues: 1900 to 0700 Sat: 1900 to Midnight Sun: 0900 to Midnight
Tomorrowland Direct RBBS (SYD-TLD) Phone: (02) 411 2053 Sysop: John Thwaite.	24 Hours
Info-Centre BBS Phone: (02) 344 9511 Paris Radio.	24 Hours EST Registration $25
Newcastle Microcomputer Club RCPM Phone: (049) 68 5385 Sysop: Tony Nicholson.	Weekdays: 1700-0830 OEST Weekends: 24 Hours.
Frontier Systems RIBM Phone: (02) 875 2606 Sysop: John Stanton.	24 Hours
BERT Phone: (02) 211 0855 Sysop:	24 HOURS V.23
Tandy RIBM Phone: (02) 625 8071 Sysop: Tandy Australia.	24 Hours
Zeta RTRS-80 Phone: (02) 627 4177 Sysop: Nick Andrew.	24 Hours
Scorpio BBS Phone: (02) 621 7487 Sysop: Russ Morrison.	24 Hours
Sentry BBS (Vic-20) Phone: (02) 428 4687 Sysop: Trev Roydhouse.	2100-0600 Mon-Fri 2000-0600 W/E
Bresike Omen Phone: (02) 457 8281 Sysop: Geoff Arthur.	24 Hours
Galaxy Apple BBS Phone: (02) 875 3943 Sysop: Chris Nelligan.	24 Hours
Illawarra BBS Phone: (042) 84 4354 Sysop: John Simon.	24 Hours
IRATA SYSTEM 42 BBCS Phone: (02) 600 9041 Sysop: Paul Sommers.	1800-2359 M-F 24 Hours W/E
ACE Phone: (02) 560 9846 Sysop: Jeff Maddock.	1800-0900 MON-FRID 24 Hours W/E
Cronulla Sutherland Atari Computer Enthusiasts Phone: (02) 529 8249 Sysop: Larry O'Keefe.	Hours Unknown

QUEENSLAND

SYSTEM NAME & PHONE NUMBER	OPERATIONAL TIMES
ACEA C64 BBS Phone: (07) 341 0285 Sysop:	24 Hours
BEX II RCPM Phone: (07) 395 1809 Sysop:	24 Hours
Brisbane Microbee Users Group (BMUG-RCPM) Phone: (07) 38 4833 Sysop: John Wain.	
Cairns & District IBBS Phone: (070) 51 1360 Sysop: Neil Barker.	24 Hours
Commodore Users BBS Phone: (07) 808 2125 Sysop: Ray King.	24 Hours
Competron RBBS Phone: (07) 52 9498 Sysop: David Johnston.	Weekdays: 5 pm-8 am
Color Computer Link Phone: (075) 32 6340	24 Hours
Hi-TECH C BBS Phone: (07) 38 6872 Sysop:	24 Hours
Texas Instruments BBS (TI-BBS) Phone: (07) 263 6161 Sysop: Humphrey Lindley.	Weekdays: 2100-0600
Tomorrowland RMSDOS Phone: (07) 394 2300 Sysop: Ian Bennetts.	24 Hours

SOUTH AUSTRALIA

SYSTEM NAME & PHONE NUMBER	OPERATIONAL TIMES
Adelaide Micro User Group BBS (AMUG-BBS) Phone: (08) 271 2043 Sysop: Richard Newcombe.	Registration $5 24 Hours
Computer Ventures BBS (CV-BBS) Phone: (08) 255 9146 Sysop: Daniel Schumacher.	24 Hours Registration $30 pa
The Electronic Oracle IBBS (EO-IBBS) Phone: (08) 260 6686 Sysop: Don Crago.	V.21/V.22/V.23
Multiple B/Board System II Phone: (08) 255 5116 Sysop: Danny Luti.	Daily: 9 pm-9 am SA time

World Radio History

Nexus Ed Dept BBS Phone: (08) 243 2477 Sysop:	24 Hours
Southern Areas BBS (Commodore only) Phone: (08) 382 4631 Sysop: Peter Hinton.	1930-2400 Hours
Omen V Phone: (08) 356 7939 Sysop:	24 Hours

TASMANIA

SYSTEM NAME & PHONE NUMBER	OPERATIONAL TIMES
Launceston RBBS Phone: (003) 34 0911 Sysop: Mike Scott.	24 Hours

VICTORIA

SYSTEM NAME & PHONE NUMBER	OPERATIONAL TIMES
Victoria Apple Bulletin Board System (VABBS) (operated by the Apple Users' Society of Melbourne Inc.) Phone: (03) 877 1990 Sysop: Grahame Willis.	24 Hours
The National IBBS Phone: (03) 818 1934 Sysop: John Blackett-Smith	5 p.m. to 9 a.m. Monday to Friday 24 hours — weekends
PC Connection IBBS (PCC-IBBS) Phone: (03) 528 3750 Sysop: Lloyd Borret.	All hours EXCEPT: Weekdays: 1800-2100 Weekends: 1000-1600 Reg. $15
HiSoft IBBS board #1 Phone: (03) 799 2001 Sysop: Richad Tolhurst.	24 Hours (300/300 Baud)
HiSoft IBBS board #2 Phone: (03) 799 2041 Sysop: Richard Tolhurst.	24 Hours (1200/75 Baud)
MICOM CBBS (MICOM-CBBS) Phone: (03) 762 5088 Sysop: Peter Jetson.	24 Hours Registration $10
Microbug Bulletin Board (MBBB) Phone: (03) 873 5734 Sysop: Grant Forest.	24 Hours
Micro-pro Computers RCPM (PM-RCPM) Phone: (03) 568 8180 Sysop: Graham Broadbridge.	24 Hours
SCUA R/CPM (SCUA-RCPM) Phone: (03) 754 5081 Sysop: Ian Branch.	24 Hours Reg $20
Tardis RCPM (TARDIS-RCPM) Phone: (03) 67 7760 Sysop: Malcolm Miles.	Weekdays: 1800-0900 Weekends: 24 Hours
East Ringwood RCPM (ER-RCPM) Phone: (03) 870 4623 Sysop: Mick Stock.	Weekdays: 1600-2359 Weekends: 24 Hours Registration $10
The Melbourne Pie (MP-CBBS) Phone: (03) 878 6847 Sysop: Len Gould.	24 Hours

ILP

TOROIDALS

available in Australia from

ELECTROMARK PTY. LTD.

43 ANDERSON ROAD (P.O. BOX 184)
MORTDALE NSW 2223
PHONE (02) 570 7287

The toroidal transformer is now accepted as the standard in industry, overtaking the obsolete laminated type. Industry has been quick to recognise the advantages toroidals offer in size, weight, lower radiated field and, thanks to I.L.P., PRICE.

Our large standard range is complemented by our SPECIAL DESIGN section which can offer a prototype service within 14 DAYS together with a short lead time on quantity orders which can be programmed to your requirements with no price penalty.

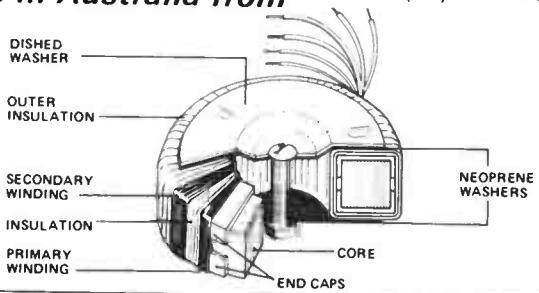

15 VA 62 x 34mm 0.35Kg Regulation 19%

SERIES No	SECONDARY Volts	RMS Current
0x010	6+6	1 25
0x011	9+9	0 83
0x012	12+12	0 63
0x013	15+15	0 50
0x014	18+18	0 42
0x015	22+22	0 34
0x016	25+25	0 30
0x017	30+30	0 25

(encased in ABS plastic)

30 VA 70 x 30mm 0.45Kg Regulation 18%

1x010	6+6	2 50
1x011	9+9	1 66
1x012	12+12	1 25
1x013	15+15	1 00
1x014	18+18	0 83
1x015	22+22	0 68
1x016	25+25	0 60
1x017	30+30	0 50

50 VA 80 x 35mm 0.9Kg Regulation 13%

2x010	6+6	4 16
2x011	9+9	2 77
2x012	12+12	2 08
2x013	15+15	1 66
2x014	18+18	1 38
2x015	22+22	1 13
2x016	25+25	1 00
2x017	30+30	0 83
2x028	110	0 45
2x029	220	0 22
2x030	240	0 20

80 VA 90 x 30mm 1Kg Regulation 12%

3x010	6+6	6 64
3x011	9+9	4 44
3x012	12+12	3 33
3x013	15+15	2 66
3x014	18+18	2 22
3x015	22+22	1 81
3x016	25+25	1 60
3x017	30+30	1 33
3x028	110	0 72
3x029	220	0 36
3x030	240	0 33

120 VA 90 x 40mm 1.2Kg Regulation 11%

4x010	6+6	10 00
4x011	9+9	6 66
4x012	12+12	5 00
4x013	15+15	4 00
4x014	18+18	3 33
4x015	22+22	2 72
4x016	25+25	2 40
4x017	30+30	2 00
4x018	35+35	1 71
4x028	110	1 09
4x029	220	0 54
4x030	240	0 50

160 VA 110 x 40mm 1.8Kg Regulation 8%

5x011	9+9	8 89
5x012	12+12	6 66
5x013	15+15	5 33
5x014	18+18	4 44
5x015	22+22	3 63
5x016	25+25	3 20
5x017	30+30	2 66
5x018	35+35	2 28
5x026	40+40	2 00
5x028	110	1 45
5x029	220	0 72
5x030	240	0 66

225 VA 110 x 45mm 2.2Kg Regulation 7%

6x012	12+12	9 38
6x013	15+15	7 50
6x014	18+18	6 25
6x015	22+22	5 1*
6x016	25+25	4 50
6x017	30+30	3 75
6x018	35+35	3 21
6x026	40+40	2 81
6x025	45+45	2 50
6x033	50+50	2 25
6x028	110	2 04
6x029	220	1 02
6x030	240	0 93

300 VA 110 x 50mm 2.6Kg Regulation 6%

7x013	15+15	10 00
7x014	18+18	8 33
7x015	22+22	6 82
7x016	25+25	6 00
7x017	30+30	5 00
7x018	35+35	4 28
7x026	40+40	3 75
7x025	45+45	3 33
7x033	50+50	3 00
7x028	110	2 72
7x029	220	1 36
7x030	240	1 25

500 VA 140 x 60mm 4Kg Regulation 4%

8x016	25+25	10 00
8x017	30+30	8 33
8x018	35+35	7 14
8x026	40+40	6 25
8x025	45+45	5 55
8x033	50+50	5 00
8x042	55+55	4 54
8x028	110	4 54
8x029	220	2 27
8x030	240	2 08

625 VA 140 x 75mm 5Kg Regulation 4%

9x017	30+30	10 41
9x018	35+35	8 92
9x026	40+40	7 81
9x025	45+45	6 94
9x033	50+50	6 25
9x042	55+55	5 68
9x028	110	5 68
9x029	220	2 84
9x030	240	2 60

Why a Toroid?

- Smaller size & weight to meet modern 'slimline' requirements.
- Low electrically induced noise demanded by compact equipment.
- High efficiency enabling conservative rating whilst maintaining size advantages.
- Lower operating temperature.

Why ILP?

- Ex stock delivery for standard 240V range
- Fast prototype service available
- 2 year no quibble guarantee

For 110V primary insert "0" in place of "X" in type number.
For 220V primary (Europe) insert "1" in place of "X" in type number.
For 240V primary (UK) insert "2" in place of "X" in type number.
IMPORTANT. Regulation — All voltages quoted are FULL LOAD.
Please add regulation figure to secondary voltage to obtain off load voltage.

World Radio History

Hi-Tech BBS (HI-BBS) 24 Hours
Phone: (03) 397 1165
Sysop: Clement Maloney.

Am-Net Multi-User TurboDos System (AM-NET)
Phone: (03) 366 7055 24 Hours
Sysop: Peter Hallgarten. Reg. $5 pa

Basis Users Group of Melbourne (BUGM-RCPM)
Phone: (03) 500 0562 Daily: Midnight-6pm
Sysop: Sol Green. Sun: Midnight-Midday

Apple Hackers United (AHUBBS) Mon-Fri: 3 pm to 6.15 am
Phone: (03) 762 1582 Weekends: 24 Hours
Sysop: John Forbes.

Public Resource Number 1 (PR#1) 24 Hours
Phone: (03) 878 2918
Sysop: Darryl Harvey.

Down Under Software IBM-PC BBS 24 Hours
Phone: (03) 429 5819 1200/75 & 300/300 Baud
Sysop: Greg Hudson.

Gippsland MAIL-BUS (GL-MBUS) 24 Hours
Phone: (051) 27 7245 Registration $10 pa
Sysop: Max Moore.

Teledata (Was The Australian Beginning)
Phone: (03) 813 3522 24 Hours
Sysop:

Viatel Computers 24 Hours
Phone: (03) 288 3599
Sysop: Graham Broadbridge

The Dark Tower 24 Hours
Phone: (03) 337 0877
Sysop: The Exorcist

Omen IV RTRS 24 Hours
Phone: (03) 846 4034
Sysop: Philip West

C64-BBS Commodore 64 24 Hours
Phone: (03) 489 4557
Sysop:

MIN-NET 24 Hours
Phone: (054) 41 3013
Sysop:

VICTORIAN PUBLIC DIAL-UP SYSTEMS

SYSTEM NAME & PHONE NUMBER OPERATIONAL TIMES

Business & Economic Reporting Terminal (BERT)
Phone: (03) 602 1522 24 Hours
Sysop: Resource Data Pty Ltd.

WESTERN AUSTRALIA

SYSTEM NAME & PHONE NUMBER OPERATIONAL TIMES

Omen Mini 24 Hours
Phone: (09) 279 8555
Sysop: Greg Watkins.

Omen III RTRS 24 Hours
Phone: (09) 342 8555
Sysop:

Nemo RCPM 24 Hours
Phone: (09) 370 1855
Sysop: Graeme Platt.

— to page 27 ▶

The Disk Compatibility Solution

Disk incompatibility? Problem solved! Transfer data and programs between CP/M and MS-DOS quickly and easily. No cables, no complex communications software to work out. Run software on a range of different machines. Transfer wordprocessor, database and spreadsheet files across formats in seconds.

MEDIA MASTER PLUS. Supports over 80 computer formats. Built in CP/M emulator allows the IBM PC to run many CP/M programs transferred to MS-DOS. **$145.00**

MEDIA MASTER. Easy to use, menu driven program for simple disk to disk transfer. Versions available for: DEC Rainbow **$225**; IBM, Osborne and Kaypro **$95.00.**

PC ALIEN. Transfer to and from the IBM PC. Over 120 formats, including 80 track & 3.5" formats plus formats for local machines. **$95.00**

XENOCOPY PLUS. This one has got the lot! The Rolls Royce of disk transfer software, now with over 235 formats from the menu plus user defined formats. **$295.00**

80 MATE. Run almost any CP/M-80 program on the PC without a co-processor board or other hardware. Ideal for that CP/M software you still want to run. **$295.00**

TURNOVER. For IBM PC. Transfer files between DOS and APPLE formats – Apple DOS 3.3, Softcard CP/M, Apple II ProDOS, Apple III SOS and Apple II Pascal (p-System) now supported. Consists of half-size card plus software. **$545.00**

LOGO

LOGO Computer Centre

Suite 305, Henry Lawson Business Centre, Birkenhead Point, Drummoyne. Phone (02) 819 6811
PO Box 389 Drummoyne 2047 NSW
WHEN YOU WANT THE BEST!

World Radio History

ADMARKET

Readers' free adverts.
READERS-CLUBS-ASSOCIATIONS

WE'LL PUBLISH your advertisement of up to 32 words (maximum), totally free of charge. Either fill out the coupon here, or write or type it out on a clean sheet of paper. But **please** make it legible, otherwise it may not turn out as you intended! Copy **must** be with us **six weeks** prior to the month of issue. Every effort will be made to publish you advertisement, but no responsibility for so doing is accepted or implied.

CONDITIONS You must include your name and 'phone number and/or address within the 32 words (for amateurs, 'QTHR' is acceptable). Accepted abbreviations such as DSDD, 100 W RMS, ONO etc. may be used. Please include you name and full address plus 'phone number with a covering letter. **Private advertisements only** will be accepted. We have 'small ads' for traders, who should contact our advertising representatives.

Send your adverts to. **AEM ADMARKET**
Australian Electronics Monthly
PO Box 289 WAHROONGA 2076 NSW

BACK COPIES OF AEM

$3.60 including postage

- ☐ July 1985
- ☐ August 1985 (Limited copies)
- ☐ September 1985
- ☐ October 1985
- ☐ November 1985
- ☐ Dec. 1985 (Not Available)
- ☐ January 1986
- ☐ February 1986
- ☐ March 1986
- ☐ April 1986

Please send me the copies of AEM I have ticked. My cheque for _____ is enclosed.

Name .....

Address .....

.....

..... Post Code .....

Please post to
BACK COPIES OF AEM
Australian Electronics Monthly
PO Box 289
WAHROONGA 2076 NSW

ADMARKET

SELL: HEATHKIT HR1680ST RECEIVER, ham bands only: 10-15-20-40-80 metres $195. **HITACHO CRO** model V-152B, solid state dual-trace 5", 15 MHz, with manual, in box. $450. Jon VK2ZHF QTHR. (02) 631 1269 A.H.

FOR SALE: SIEMENS MODEL 100 TELEPRINTERS, includes help to use them. Write to: Frank Rees, 27 King St, Boort 3537 Vic.

SELL: SYSTEM-80 EXPANSION INTERFACE, includes: 48K, Centronics printer board, disk drive board and cable. $200. Also sell Compuvoice Speech Synthesiser $50. Randall Gallimore, 6 Charlestown Rd, New Lambton Hts 2305 NSW (049) 52 6261.

SCANNER LISTING of Australian VHF/UHF aeronautical frequencies. Approx. 500 sorted freq/location/service. $5. D. Vale VK3CDI QTHR, or write PO Box 2395, Mildura Vic. 3500.

WANTED: Contact with someone with Amstrad 6128 programs of Morse and RTTY. Charles Aston VK2YH, Box 2, P.O. Blaxland 2774 NSW. (047) 39 2464.

AUSTRALIA'S NATIONAL SWL CLUB: The 'Southern Cross DX Club' welcomes enquiries from anyone interested in shortwave, medium-wave, utility and amateur radio transmissions. Please write to GPO Box 1487, Adelaide 5001 S.A.

WANTED: NORTHSTAR ADVANTAGES, any condition hard disk or floppy. Phone Robert Armstrong (049) 59 2400.

WANTED BY INVALID PENSIONER: ZX81 printer or add-ons, any condition. Must be complete, low priced. Please write: D. Shepherd, 4 North St, Nerang 4211 Qld. (07) 58 2543. Any parts accepted, working condition or not.

WANTED: RECEIVERS. Science Fair "Globe Patrol" and deleted "SW Radio Kit" (no. 28.110), DX-160, FRG-7, Drake R7, Icom, Trio, Kenwood, Racal, JRC receivers and handbooks, also old WRTV H'books. Tony (042) 29 2573.

Where to hear superb musical reproduction through concrete:

Victoria
Ballarat—Sight & Sound
Bendigo—Prouds Audio World
Blackburn—Brashs
Dandenong—Hi-Fi Sounds
Geelong—Brashs
Greensborough—Diamond Hi-Fi
Hawthorn—Contemporary Sound Centre
Malvern—Radio Parts Sales
Melbourne—Brashs
Melbourne—Radio Parts Sales
Moorabbin—Brashs
Rosebud—Rosebud Stereo
Swan Hill—John Martins Music Studio
Traralgon—A&P Electronics

New South Wales
Albury—Haberechts World of Sound
Bathurst—Selekta Sound
Newcastle—Wardell Sight & Sound
Byron Bay—Byron Bay Sound Centre
Grafton—Buckleys Music House
Maitland—High Street Hi-Fi
Marrickville—Apollo Hi-Fi
Nowra—Hi-Fi House
Orange—Selekta Sound
Port Macquarie—Hall of Electronics
Roseville East—Hempel Sound
Summer Hill—Apollo Hi-Fi
Sydney—Sydney Hi-Fi Centre
Tamworth—Sound Components
Wagga Wagga—Pitmans Audio
Wollongong—Hi-Fi House

Queensland
Bowen—Plaza Sight & Sound
Brisbane—Handos Sound Dimensions
Cairns—Stereo World
Ipswich—Ipswich Hi-Fi
Kawana—Action Replay Video
Mackay—Mackay Stereo Sales
Maryborough—Keller Electronics
Monto—Heilbronn's Radio & TV
Mount Isa—Hiway Sound Centre
Nambour—Custom Sound Centre
Southport—Gold Coast Hi-Fi & Video
Toowoomba—Hunts Electronics & Hi-Fi

South Australia
Adelaide—Blackwood Sound Centre
Moonta—ABS Computers
Mount Gambier—Elliots Sound Equipment
Whyalla—WTR Sight & Sound

Western Australia
Fremantle-Alberts Hi-Fi
Perth—Alberts Hi-Fi
Victoria Park—Alberts Hi-Fi

Northern Territory
Alice Springs—Aerial Installations
Darwin—Sound Spectrum

A.C.T.
Kingston—Kingston Hi-Fi
Phillip—Brashs

Tasmania
Devonport—Hi-Fi House
Hobart—Quantum Electronics
Launceston—Wills Hi-Fi

Sole Australian Distributors:
SCAN AUDIO Pty. Ltd.,
52 Crown Street,
Richmond. Victoria 3121.
Telephone (03) 429 2199.
QLD. Office: (07) 57 7433

World Radio History

There are concrete reasons why these are the finest speakers ever!

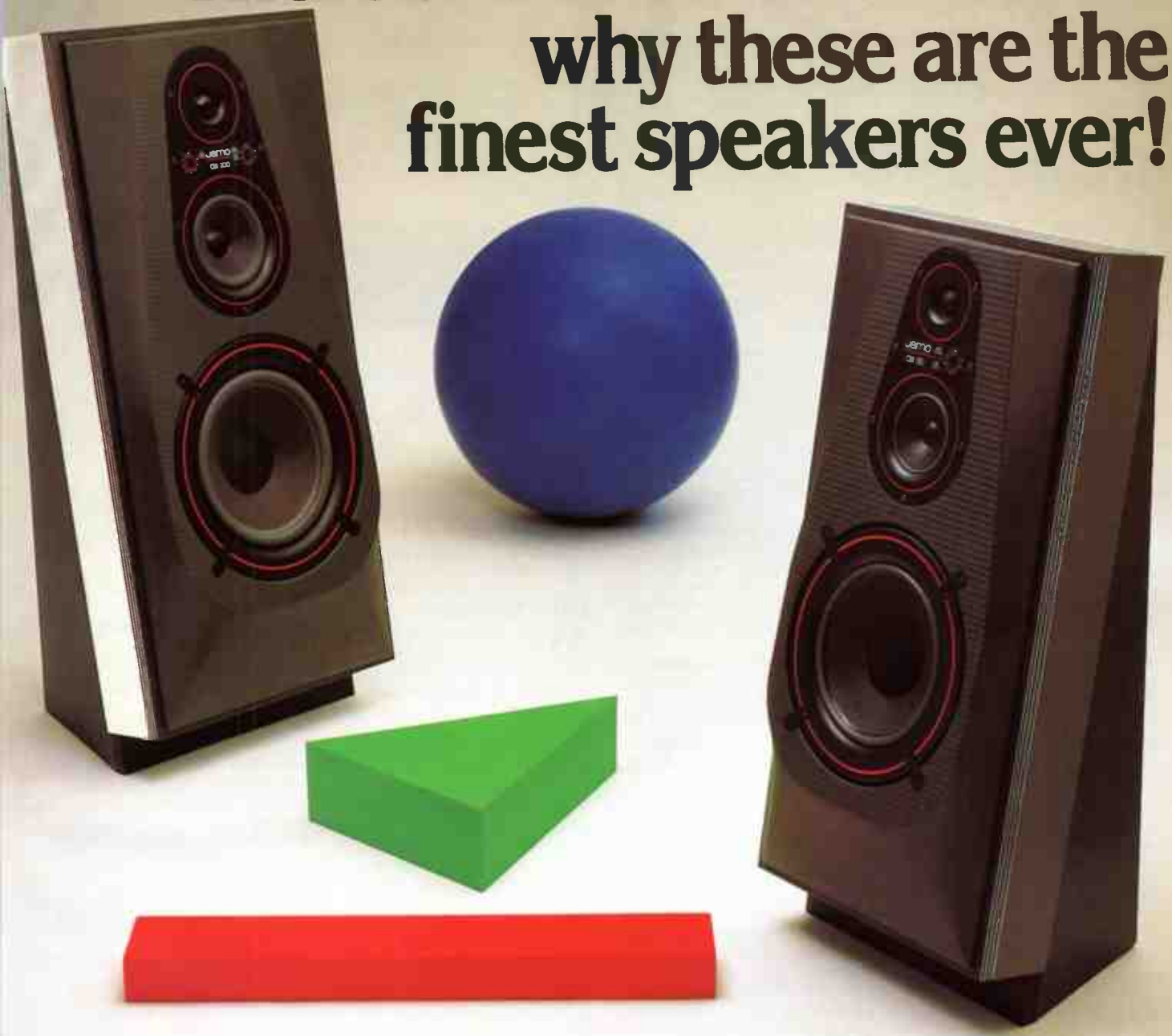

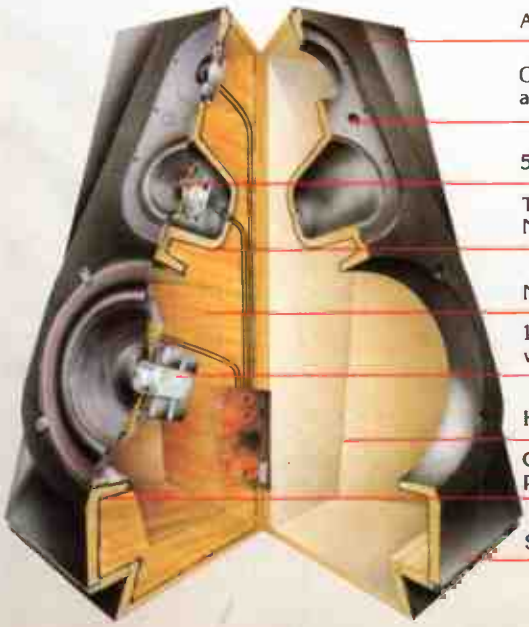

Anti diffraction front

Overload protection and attenuators

5" cone midrange

Totally "dead" NCC concrete front

Non-parallel cabinet

10" woofer with dbl. magnet

High Performance x-over

Centre-Bass-Reflex Phase linear front panel

Solid built-in stand

From Jamo comes a range of loudspeakers based on the concept of an impossible-to-vibrate front baffle plate, coupled with a speaker enclosure in which no two sides are parallel.

The result is more costly to produce than conventional loudspeakers but in terms of result, the effect is literally incredible. The ability to cope with the often violent dynamics of compact disc recordings is also an outstanding feature of these speakers. You can see and hear the superlative Jamo Digital Monitor range at your nearest Jamo dealer today.

Jamo HI-FI

For a free, most comprehensive brochure, please contact your local Jamo dealer (he is listed on the opposite page), or contact Scan Audio direct on (03)4292199.

World Radio History

New compact disc players from JVC

According to JVC, the design philosophy behind their three new compact disc players emphasises ". . . highly musical reproduction through superior disc tracking", based on the no resonance, no vibration concept employed by their new disc transport mechanisms.

Top of the range is the XL-V400B which features random access up to 15 tracks, a 27-function remote control, two-speed search, 'intro scan' and a sophisticated repeat function allowing repeat of all tracks, programmed tracks or between two points. The rrp is $849.00.

The XL-V200B represents excellent value for money, according to JVC, and combines an abundance of features usually only found in higher priced models. The compact disc player has random access up to 15 tracks, two-speed manual search, index search and repeat function for just $579.00 rrp.

To meet the demand for midi-sized disc players, JVC are also releasing the XL-V20B which has the same features and price as the XL-V200B.

When playing compact discs, vibrations are the biggest enemy, JVC say, causing mistracking and dropouts. These three new compact disc players employ JVC's independent suspension system to isolate the disc from external shock and acoustic feedback. JVC's New Y servo system further improves tracking by preventing the pick-up from being "fooled" by scratches and dirt, they say.

The new, more sensitive JVC-developed laser pickup incorporates a new object lens which ensures greater tracking ability, it is claimed.

For further information, contact **Hagemeyer (Australasia) B.V. 5-7 Garema Circuit, Kingsgrove, 2208 NSW (02) 750-3777.**

Fancy a 'Bell Boy'?

Perth-based Sentron Limited's 'Bell Boy' was designed to give a person the ability to activate a mains-operated appliance from virtually anywhere in the world via a telephone. As the unit is activated only by the sound of the 'phone ringing, there is no cost to the caller.

There have been many sound-activated switches in the past but they all had one glaring fault. They were non-discriminate to sounds, that is, a door knock would turn on the unit as well as a baby crying, a car horn, dog barking, etc, Sentron say. What sets the Bell Boy apart from these is the fact that it discriminates, recognising a certain coded sequence of sounds. For the Australian market it is set to recognise the double ring sequence of the telephone.

One other difference between the Bell Boy and previous units is that most of those were only good for approximately 230 watts whereas the Bell Boy is rated up to 10 amps, so anything you can plug into your normal mains can be plugged into the Bell Boy.

You plug the Bell Boy into power and then plug into it whatever appliance you wish to control. When you are away from your house you call up, let the phone ring four times, hang up, call back and let it ring six times and then hang up. The unit will check that it has received the correct code and then activate the appliance.

It has a timer which can be set for half an hour, one hour, two hours, four hours or eight hours, as well as "interchange". Interchange means that you can call up, turn a device on, call back later and turn the device off, or vice versa. The unit comes with an adjustable sensitivity setting so that you can configure the unit to work at varying distances from the telephone. If you turn the sensitivity completely off the unit will work just as a standard timer, using the manual button.

There are many applications for the 'Bell Boy' Sentron claim, ranging from controlling water heaters to household security. Details from **Sentron Ltd, 102 Colin St, West Perth 6005 W.A. (09) 481 0942.**

CD cleaner

Milty Products of the UK, long known for their exceptional range of record care products including Permostat and Permaclean, has released a compact disc cleaner through their Australian distributor, Concept Audio Pty Ltd.

This cleaner comes in the form of pre-saturated single use wipes which are ready for immediate use. They are packaged in a 70 wipe drum — far more convenient than bottles, aerosols and pads, Milty say.

At a retail price of just $13.95 for a drum of 70 wipes, Milty says the investment is a wise one. Further information can be obtained by calling **Concept Audio on (02) 938 3700** or writing to the company at **Post Office Box 422, Dee Why 2099 NSW.**

'Sportsmans Special' TV antenna

There are many sporting events you can't watch broadcast 'live' or at all, on the Sydney TV stations. But they are broadcast by regionals just outside the Sydney service area.

Jaycar has released a new TV antenna designed to pick up channels 4 and 5A (Wollongong and Newcastle). It costs just $59.95.

The idea behind it arose when Jeff Fenech had his big title fight in Sydney some months ago. It wasn't televised in Sydney, but it was televised in other areas, one being Wollongong. Similar situations occur in other parts of Australia.

Jeff Fenech has his second title fight in Sydney late this month, so you've still got time to be ready for a ringside video seat.

Jaycar's ch. 4/5A antenna is listed as cat. no. LT 3190. Jaycar has four stores in Sydney and one in Brisbane, or contact **PO Box 185, Concord 2137 NSW.**

Rane for Klarion

Klarion Enterprises Pty Ltd, a subsidiary of the publicly listed Broadcast and Communications Limited (BCL), has been appointed Australian and Pacific distributor for RANE professional audio equipment.

The US-based Rane Corporation is one of the fastest growing companies in that country today, says Klarion and specialises in equipment for studio recording use.

Rane engineers are considered experts in the field of audio recording technology, and have had technical papers published in the top professional audio magazines in America, Klarion tell us.

Klarion is distrubuting the full range of the well-known brand. According to Andrew Horman of Klarion, the Rane line fits in perfectly with Klarion's range of professional audio products.

Details from Andrew Horman, Klarion Enterprises Pty Ltd, 16 Suakin St, Pymble 2073 NSW. (02) 449 5666 ▶

World Radio History

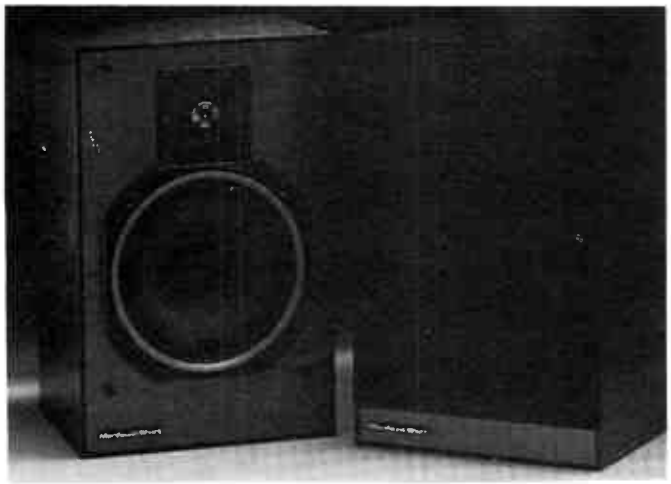

New speakers from Morduant Short

Concept Audio of Brookvale NSW has introduced two new loudspeakers from Morduant Short, models MS 15 and MS 25Ti.

The MS 15 is a two-way unit with a 165 mm bass driver and is intended for shelf or stand mounting, finished in black ash laminate. It has a rated sensitivity of 87 dB (1 W @ 1 m) and can be used with amps rated from 10 to 300 watts per channel. Retail price is quoted as $598.00 a pair.

The MS 215Ti, according to Morduant Short, is a 'natural successor' to their legendary MS 20 system. They say this model incorporates major advances in drive technology to deliver "... new standards in its class for performance ..." This unit employs a 200 mm bass driver in a two-way design and retails for $698.00 a pair.

Both new speakers feature Morduant Short's "Positec" protection circuitry to safeguard against "... all forms of overload or amplifier fault condition, and enabling high volume levels to be enjoyed, where required, without risk or damage."

Details from **Concept Audio, 17/98 Old Pittwater Rd, Brookvale 2100 NSW. (02) 938 3700.**

Short-play audio tapes

Abbreviated-play audio cassette tapes, suitable for such applications as advertising and music recording, are being introduced by Klarion Enterprises Pty Ltd.

The tapes can be tailored to lengths as brief as one minute or even less — ideal for recording 30- or 60-second commercials, for singers' demo tapes, professional studio use and even classroom applications, the company says.

Standard 60- and 90-minute audio tapes are too long and often too cumbersome for such uses, especially in the case of commercial demos lasting only a few seconds.

The special tapes are made to three configurations with a casing or sturdy polystyrene or polycarbonate. These materials make the tape body far superior in its physical properties than the conventional material used in cassette construction, according to Klarion.

Corrugated slipsheets ensure a perfectly flat pancake within the cassette — an important feature when the tape is used for high speed duplicating or subjected to frequent fast forward/rewind operation.

A pressure pad is secured to the spring by four clasps as well as being glued, unlike conventional tapes which are only secured by glue. This ensures that the pad cannot be subject to any lateral movement on the backing spring if the cassette is frequently driven at high speed (such as when used in language laboratories).

The magnetic tape used is supplied by Agfa-Gevaert, manufacturers of magnetic recording tape for 44 years, and is made to high quality standards intended to consistently meet the most demanding requirements of recording engineers, say Klarion.

For further information, **call Fiona Horman, Klarion Enterprises Pty Ltd, 63 The Kingsway, South Melbourne 3205 Vic. (03) 61 3541.**

A GREAT REFERENCE FOR (AND BY) DAVID TILBROOK

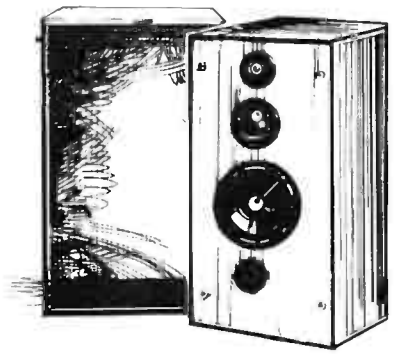

They compete with $2,500 Reference Monitors – but can be built for a third of the price!
We're talking about the VIFA 3-way Reference Monitor designed by David Tilbrook – following the incredible success of David's 2-way AEM-6102 VIFA based design published in August. The 2-way kit has been sold in staggering quantities by hi-fi stores and electronic shops throughout Australia, where they can be heard outperforming 'well known' imported brand names costing two to three times as much!
Now David Tilbrook has done it again, this time with the 3-way VIFA design AEM-6103. Never before has it been possible to get such great value in kit speakers; the reasons being that there is no 25% import duty, no 30-35% freight into Australia, no high freight costs within this country itself, no 30% sales tax and no profit margins added to all these links of the chain which are involved in importing fully assembled speakers.
The 3-way AEM-6103 sounds like two to three times what you'd pay for in a recognised brand name (which may even be using VIFA drivers), and these might well be using inferior cross-overs and cabinets to save cost.

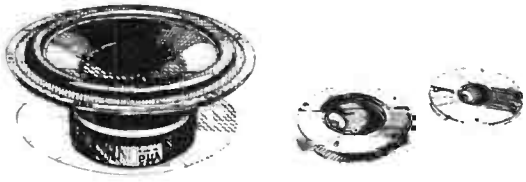

Dealers – Sydney: Jaycar Electronics.
Melbourne: Radio Parts.
Brisbane: Queensland Stereo Visual Supply.
Adelaide: International Sound.

For further information, please contact the Sole Australian Distributor:
SCAN AUDIO PTY. LTD.
52 Crown Street, Richmond 3121.
Telephone (03) 429 2199.

World Radio History

The 'six-pack'

CD player

Dennis Lingane

Pioneer, once more seeking an up-market, innovative image, will shortly release this compact disc player "home juke box" that can take up to six discs at a time.

PIONEER has confounded the doyen of CD, Sony, with the release of a remote control CD player featuring the capability to play a 'stack' of discs. This CD player, due out in late March, early April, is the PD-M6S and it will handle up to six compact discs at a time.

You load up the six discs in a multiple disc pack and slide it into the front slot of the player. In fact, the system is so compact that the total six-pack is only as thick as a video tape — about 24 mm!

When these "home juke boxes" hit the market we expected them to be bulky items, not all like a slim-line CD player that will fit into any hi-fi system and look the same size as a normal player.

The overall width and depth of the CD six-pack is 24 x 125 x 140 mm. So presuming Pioneer makes these packs available as optional extras, you could load up different types of music in different packs.

Tricks with tracks

While it is quite something to be able to load up to six discs in the machine to play at once there is more to this computerised wonder. You can program the player to either play all tracks on the discs in random selection, which means randomly accessing discs as well as tracks in any order the player wants to, or play all the discs and tracks in numerical order, or play the tracks you prefer off any discs and in any order you want. So you could program it to play track 10 of one, then track five of disc six, then track two of disc five etc. The computer in this unit takes care of everything.

It's the ideal machine for shops, hairdressers, restaurants, and people who tend to stick with six discs that they play over and over again, much to the irritation of the family and neighbours! In fact, if any audio buff were to analyse his/her playing pattern they would find that they play around six discs on a regular basis. When a new disc arrives they put the least popular of the six in the cupboard and won't bother with it for a year.

So Pioneer appears to have been right to select six because it is a good number to work on — not to mention the obvious promotional opportunities of the well known term "six-pack".

Opera and classical music enthusiasts will like the opportunity to be able to play a full length opera non-stop without having to get up and change the discs. Taking the maximum storage capability of the CD of 70 minutes and multiplying that by six, one can expect non-stop music for seven hours.

And the price of this new generation CD player when it is released is expected to be between $799 and $899 depend-

World Radio History

— from page 26
ing on yen versus dollars etc. So it isn't expensive. And a well-worthwhile feature is a headphone socket with a volume control.

Singles, too!

For those who want to play single discs this player will do that, too. You slip out the multi-play cartridge and slide in the single-play cartridge. This cartridge then remains in the player and when you press the eject button only the drawer slides out to receive the CD. It is like any other CD player in this mode, except the drawer doesn't close automatically when you press the play button. You have to physically push the drawer with the CD in it closed.

Sunny side up

There is one trap to be aware of. My review model, one of only a handful that has arrived in Australia for the press, came without any instruction book. Initially, the unit rejected my attempts to play a disc. Then one of my family, with better eyesight than I, read a small label on each of the cartridge holders that said "make sure you place the disc in the holders with the label facing downward". This is opposite to normal practice where the disc goes into the player with the label uppermost.

So be warned. The disc must have the label facing down. And remember the golden rule — when all else fails, **read the instructions.** (You would think we would have learnt that by now.)

Trends?

This player from Pioneer is something of a gee-up. Pioneer has struggled with its image over recent years, wandering between mass market and the esoteric. In the last couple of years, in both Japan and the USA, Pioneer has made up a lot of lost ground with some off-beat products including a combination CD/video disc player that plays both compact discs and video discs. So successful is this combi-product that many leading companies now buy the product from Pioneer with their own brand on it, including Marantz and Sony. Philips says it will release one of these combi-players in PAL or video format in the next year.

Recently, Pioneer released a computerised twin cassette deck player that was all 'top-drawer' with Dolby B & C, and DBX. Now comes this multi-play compact disc unit. Technics talked about releasing a product like this 15 months ago, as did Sony, but Pioneer has taken the kudos from under their noses. It appears that Pioneer may see its way out of the tunnel through esoteric product, winning press and sales as they rebuild an esoteric image. They certainly beat everyone else to the punch with this unit.

By the way, Pioneer, along with Sony, were first to release a car CD player when everyone else was talking about it. So the company is really putting on a sprint these days — technologically. Perhaps we'll see them setting some future trends?

Modems, networks and data communications — part II

Applecross Phone: (09) 364 9924 Sysop: Lindsay Allen.	24 Hours
Computex BBS Phone: (09) 447 0522 Sysop: Russell Stokes.	24 Hours
Minisys (The PAD) Phone: (09) 337 2941 Sysop: Mark Lillywhite.	CLOSED 1600-2100 M-TH 1600-0000 Fri 0800-0000 W/E Reg $5
The Mouse Exchange Phone: (09) 330 5530 Sysop: Leonard Holling.	CLOSED ALL WEEK BETWEEN 0700-2030
Mini Pro Phone: (09) 337 3400 Sysop: Lou Schillaci.	0830-1730 Mon-Fri
The Twilight Zone Phone: (09) 361 0547 Sysop: Gernox B scle.	2100-0700 7 Days
Atari BBS Phone: (09) 409 7251 Sysop: Steve Quartly.	24 Hours Reg $10
Trash 2 Phone: (09) 478 2419 Sysop: Dave Gunnyon.	2000-0700 7 Days

NORTHERN TERRITORY

SYSTEM NAME & PHONE NUMBER	OPERATIONAL TIMES
Omen II RTRS (OM2-RTRS) Phone: (089) 27 4454 Sysop: Terry O'Brien.	24 Hours
Outback RCPM (OUTB-RCPM) Phone: (089) 27 7111 Sysop: Phil Sampson.	24 Hours
Red Centre RCPM Phone: (089) 52 8852 Sysop:	24 Hours

OTHERS IN AUSTRALIA

Austpac Phone: 01921	24 Hours 300 baud
Austpac Phone: 01922	24 Hours 1200/1200 baud
Austpac Phone: 01923	24 Hours 1200/75 baud
Viatel Phone: 01955	24 Hours 1200/75 baud

NEW ZEALAND

Attache RBBS Phone: 0011 64 9 78 9084 Sysop: not known.	24 Hours needs login procedure and password
Rotorua BBS Phone: **** ** 7 37 0154 Sysop:	Unknown Full number not known
NZ Micro Club RBBS Phone: **** ** 9 76 2309 Sysop:	Unknown

World Radio History

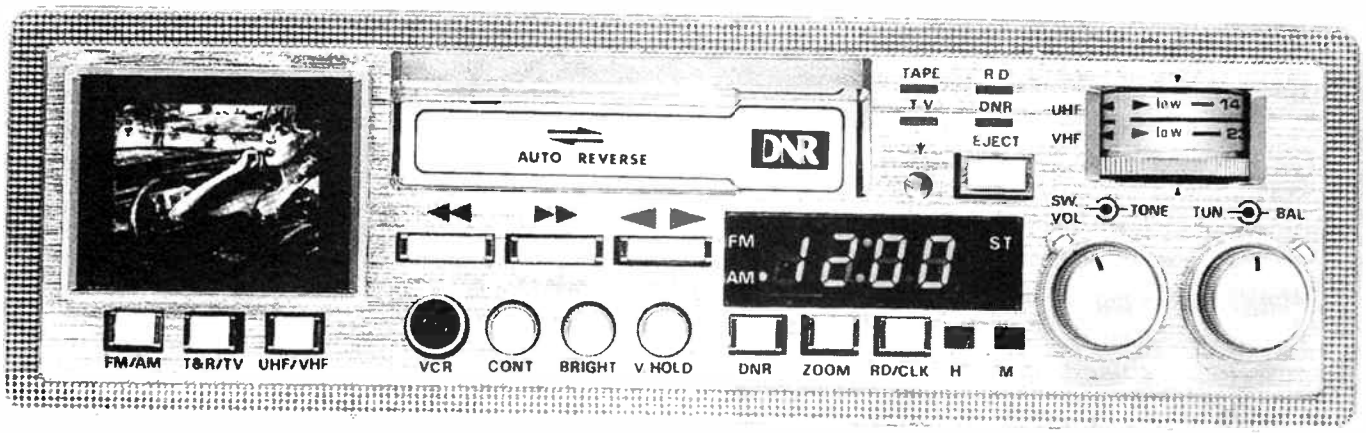

A mobile sound and vision entertainment source

EVERYONE comes across that situation where you have to provide a gift for 'the person who has everything'. Well, this piece of equipment should solve that problem without requiring but a moment's thought, especially if such a person is a 'gear & gadget freak'.

Yes, the picture here tells the story — you can believe your eyes, it's an in-dash car radio and cassette player *with a* TV screen. Fantastic! This remarkable little unit, from Roadsound, Model RTV-8000, is a "25 x 25 W" stereo radio/cassette player/TV. The radio covers both the AM and FM stereo broadcast bands, while the TV tuner covers the VHF TV channels from 2 to 12 and the UHF TV channels from 21 to 69. Extra-ordinary! The tape player is a 4-track stereo deck with full auto-reversing, dual capstan drive. And the whole shooting match comes in a case just 178 mm wide by 200 mm deep by 44 mm high. Remarkable! It's powered from your vehicle's 12 V battery (negative earth only).

The tape player

This section of the RTV-8000 is a fairly conventional, average quality cassette player, offering a frequency response of 30 Hz to 15 kHz, signal-to-noise performance of 45 dB, and RMS wow-&-flutter of 0.25%, similar to many in car radio/cassette units on the market. All controls are the pushbutton type. The fast-forward/rewind button is a locking type that releases when the tape end is reached, whereupon the tape will commence to play in the reverse direction. If, part-way through fast-forward or fast-rewind, you push the EJECT button halfway in, the lock is released and the tape will play normally.

A tape noise reduction feature is included. This employs the National Semiconductor 'DNR' system which gives a claimed 10 dB noise reduction, on both tapes and FM broadcasts, without requiring encoded material, according to Natsemi literature.

The radio

The radio covers both the AM and FM broadcast bands, but only offers stereo reception on the FM band. A single tuning control serves for both the radio and TV sections. Tuning needs to be done with care. LED display shows station frequency. The display doubles as a clock display, too. The DNR works with the radio section as well as the tape player.

An 'atenna trimmer' adjustment is provided, accessible with a screwdriver through the front panel. This is located just below the 'TV' indicator, to the left of the EJECT pushbutton. It provides some compensation for the vehicle antenna's performance at the higher frequency end of the broadcast band.

Like the tape section, the radio's performance is comparable to many units available. Performance on FM depends entirely on how good your antenna is and your location. But that's not to say the RTV-8000 didn't give a fair showing of itself. On good speakers, FM reception gives quite a good account of itself and we were pleasantly surprised at the result.

The TV section

The makers have managed to squeeze into this product a complete monochrome TV with a 38mm (1.5 inch) screen. Some gimmick, but many would adjudge it more than worth it for the sheer novelty value! And it seems the novelty value of television never really wears off with many. The problem, as we see it, is that you need both a good signal and a reasonable location for satisfactory viewing. And you need to be stationary. But, for catching the final moments of a great sporting event, or catching the details of a crucial episode in a revered TV 'soapie', the RTV-8000 could well fill the gap by being in the right place at the right moment.

As stated earlier, the one tuning control serves for the TV and radio sections. Here, care in tuning is necessary. If you're used to pushbutton convenience in the equipment in your loungeroom, this will be a new experience. Selection of VHF or UHF channels is by means of a pushbutton. A separate 75 ohm unbalanced input antenna socket is provided and the Owner's Manual suggests you connect it to mobile TV antenna.

Sensibly, the makers have included an RCA socket on the front panel for input (RF) from a video cassette recorder. And for this inclusion they earn extra points. If you have a video camera/recorder unit that does not offer playback through the camera's electronic viewfinder (because it doesn't have one), here's your answer to checking your shots while shooting in the field — play them back through the RTV-8000's VCR input. Though the screen is tiny, you'll get a good idea whether or not you've fluffed a shot.

The image you get on-screen is, well, tiny. Clearly, detail is lost, but the basic object is to get a gist of the action. A small lens provided with the unit snaps over the screen and provides some enlargement. A ZOOM switch expands the vertical and horizontal sweeps for closer viewing of the central portion of the picture. One can see, in a few year's time when these units have been superceded or traded-in, radio amateurs seeking them out to be pressed into service as transmission monitors . . .

Comments

It's amazing what the makers have managed to successfully 'shoehorn' into a box which fits readily into a vehicle dash.

Overall, the RTV-8000 performs as you'd expect. However, with the TV section, don't expect great things. It does work, but you have to accept the limitations that a mobile environment and a small screen imposes.

Retailing at a price around $400, it certainly represents value for money for the features offered.

Roger Harrison

Review unit kindly supplied by Ian J. Truscott's Electronic World, 30 Lacey St, Croydon Vic. (03) 723 3860.

World Radio History

MAYFLIERS

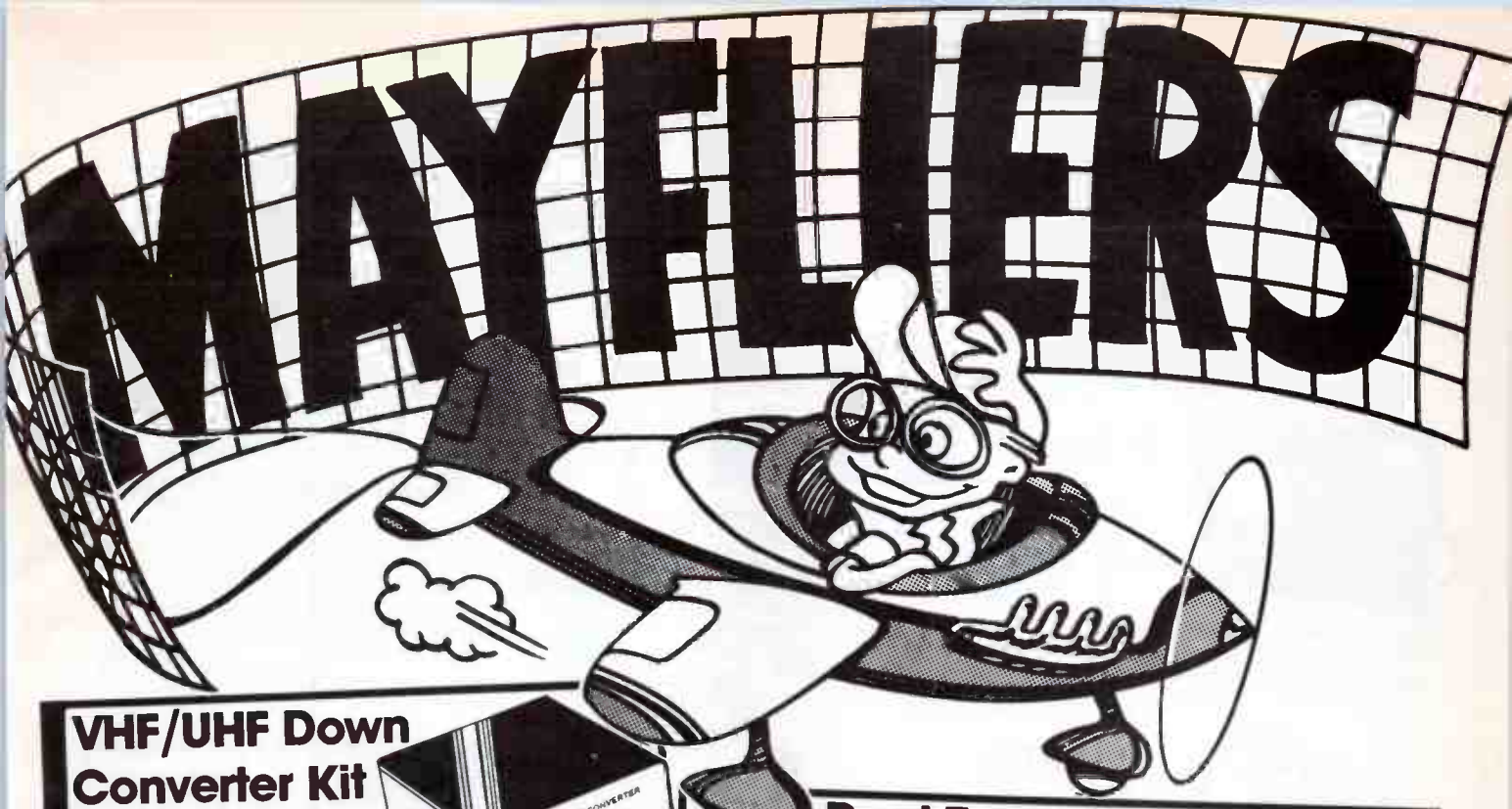

VHF/UHF Down Converter Kit

$69.50 NEW FOR '86

Now view UHF transmissions without the expense of buying a new TV set. It's essential for the new Ch-28 and poor VHF reception areas serviced by UHF. Measuring a mere 93x40x25mm, this easy to assemble module plugs into antenna socket. Using a lower end VHF channel, it covers UHF bands 4 and 5 (526-820MHz). All you need is a UHF antenna and presto... a whole new world of TV enjoyment!
Cat K-3236

VHF 2m 'Yagi' Antenna Kit

$89.95 NEW FOR '86

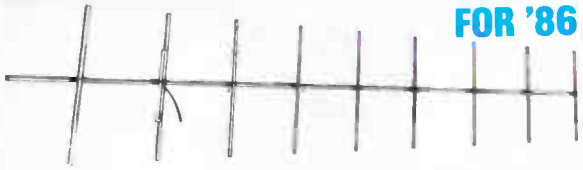

Excellent value for the 2m amateur. Brilliant 12dBd gain provides that all-important extra range. Pre-drilled to eliminate tuning hassles... so you can install it in no time!
Cat K-6297

Turns Any Old TV Into A CRO!

$34.50

Real money saver for all hobbyists! This sensational CRO adaptor kit converts that old black and white (or colour) TV set into a fully functional 300kHz oscilloscope. Provides excellent display at low frequencies. Only requires a 100mV for full screen deflection. Kit comes with complete components and instructions.
Cat K-3060

Dual Tape Answering Machine

Telecom Authorised

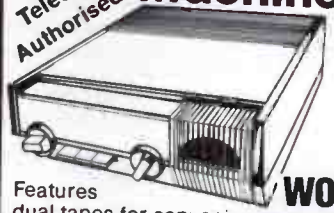

Features dual tapes for convenience, remote beeper for message retrieval from any other phone (anywhere in the world!) and much, much more. Great machine? You bet!
Cat F-6136

WOW! **$269**

MEMORY PHONE WITH MUSIC!

Sensational value for a 12-number memory phone with a host of features. Last number re-dial and mute buttons PLUS 'music' function which entertains callers waiting on line
Cat Y-1184

Telecom Authorised

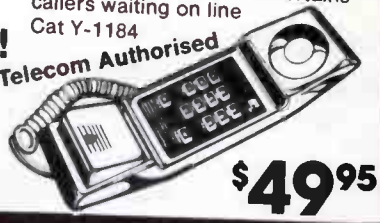

$49.95

VZ-300 VALUE!

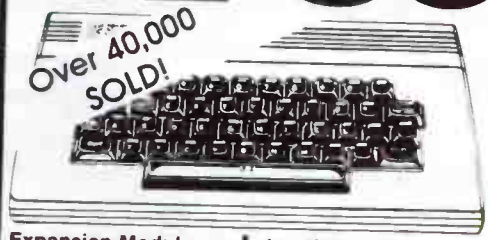

Our popular VZ-300 colour computer offers 16K RAM colour and sound. The whole family can use it for budgeting, education and games.
Cat X-7300

$99

Expansion Module

Just so it doesn't forget! Take your VZ-300 memory from 18K to 32K units. You'd hardly need any more.

16K module Cat X-7306 **$84.50**

Joysticks and Interface

Add new dimensions to your games with these super responsive joysticks. Comfortable lightweight and easy to operate. Cat X-7315

$49.50

Data Cassette

Store your programs and data for later retreival! This deluxe recorder is made just for the VZ-300. Plugs straight in. Cat X-7310

$69.50

DICK SMITH ELECTRONICS DICK SMITH ELECTRONICS DICK SMITH ELECTRONICS

World Radio History

STOCK AVAILABILITY... TO AVOID DISAPPOINTMENT PLEASE PHONE YOUR NEAREST DSE STORE.

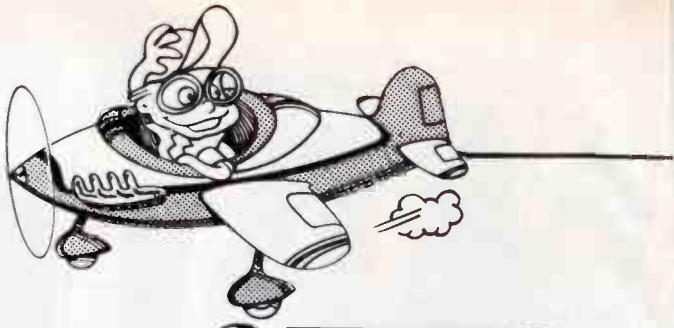

MW/FM/SW 9 Band

WAS $139

$119

Tune in to the world brilliantly with this incredible dual conversion 9-band receiver. Offers superb sensitivity, selectivity, interference rejection and stability. Colossal value! Cat D-2837

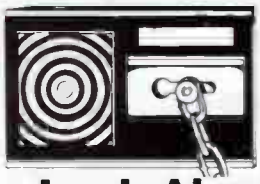

Lock Alarm

Combines the features of a security chain and alarm. So you can have protection when you're at home — or when you're out. Cat L-5155

WAS $9.95

$6

Auto Night Light

Superb light system sense people approaching and automatically turns on its two bright spot lights. Potential intruders will think there's someone at home. Ideal as a front door greeting light too! Cat L-5170

WAS $149 **$99**

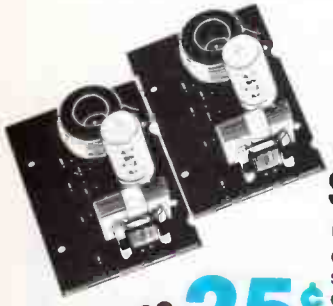

Philips X/Over 2 Way Speakers

Use in your own design for a two-way speaker system, Ideal cross-over characteristics. Cat J-1022

WAS $1.00 **25¢**

Economy Control Module

The lowest price alarm module around — but it features pro quality circuitry and facilities. Both n/o and n/c inputs, suits all normal detection devices and has one minute alarm period. Cat L-5060

WAS $29.95 **$25**

Home Satellite TV

Home Satellite Television by Rick Cook & Frank Vaughan 326 pages. If you're thinking about your own station or just curious this one has the answers. Cat B-1840

WAS $15 **$10**

Negative Ion Generator

You've heard all about Negative Ion Generators and their benefits, buy the kit and find out what it's all about. Many commercial units run from the mains, but our kit is safe — it runs on 12V DC, which also means that you can put one in your car. Cat K-3335

WAS $24.50 **$19.50**

Glass sensor alarm

Compact, simple to install sensor guards both large and small glass areas . . . a deliberate impact instantly triggers an alarm. Ideal for shop fronts or home glass sliding doors and windows. Features adjustable sensitivity control. Cat L-5165

WAS $29.95 **$20**

The World Of Satellite TV

What an amazing book! Covers just about everything you'd ever need to know about satelite TV. Cat B-1842

WAS $22.95 **$10**

13.8V Power Supply

Ideal for smaller amateur transceivers and 2 metre rigs

WAS $42.50

$35

A big 5 amps continuous rating and 6 amp peak (depending on the heatsinks used) from this supply. Comes with all components, PCB, etc, but no 'hardware'. Build it Cat K-3449

Appliance Alarm

Protect your VCR, your stereo, your TV . . . anything! Just plug them into this alarm: and if some light-fingered Louie tries to lift your loot, look out! The alarm soon suggests he change his mind! Cat L-5052

WAS $69 **$50**

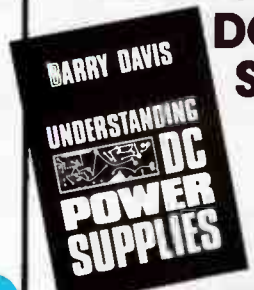

Understanding DC Power Supplies

Covers everything from introduction to rectifiers to switch mode supplies. Cat B-3623

WAS $19.50 **$12**

DICK SMITH ELECTRONICS DICK SMITH ELECTRONICS DICK SMITH ELECTRONICS

World Radio History

DISCONTINUED

BARGAINS!!!

1000 Pieces Mixed Components

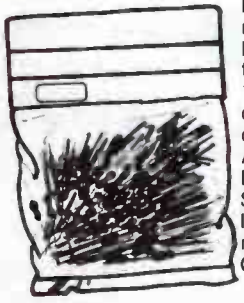

No we haven't made a mistake, and yes we might be crazy but we must clear this stock — ¼W/.5W/ 1W/resistors, electro caps/trimpots/green caps/ceramics and more. All assorted values in one bag. That's less than $0.01¢ each - Be quick limited stock - never to be repeated.
Cat R-9000

$9.95

Water Resistant Carry Bag

Anyone who owns a Walkman or other Walkie-type stereo or AM/FM radio knows the hassles: get them wet and they tend to stop. Bad news if you like sailing, Fishing. Or just mucking around near water. Solve the problem with this water resistant carry bag.
Cat A-4010

WAS $9.95 **$6.95**

Guide To RTTY

Contains a comprehenive listing of commercial, aeronautical, maritime, press, embassy, UN and military RTTY activity.
Cat B-2070

WAS $9.95 **$7**

Expo Turntable With Cartridge

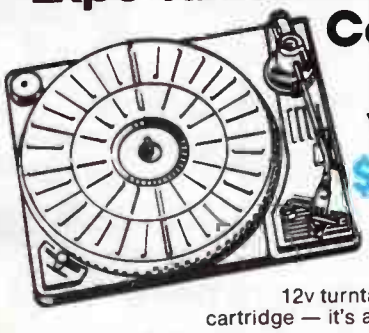

WAS $19.50 **$14.95**

12v turntable with ceramic cartridge — it's a wipe out bargain price. Cat J-1060

Personal AM/FM Stereo

Fantastic sound! This AM/FM stereo radio comes complete with famous quality Mylar headphones. Compact and lightweight it's easy to move around with you. Cat A-4001

WAS $29.95 **$24.95**

Beam Antenna Handbook

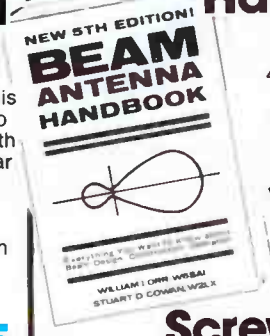

Correct beam dimensions 6 to 40 metres. Are 40 metre beams worth the effort?.
Cat B-2306

WAS $14.50 **$10**

Screwdriver Experts Guide

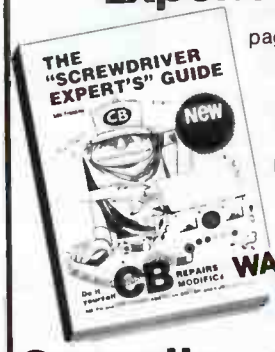

Franklin — 97 pages. The do-it-yourself CB repairs and modifications manual for the CB freak with NO electronics knowledge!.
Cat B-2324

WAS $14.50 **$10**

Speakers 7x5 W/Grill

4 ohm replacement speakers, oval shape. Cat J-1025

WAS $6.95 **$4.75 Pr**

Stack-O-Disc

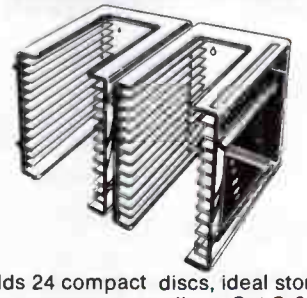

Holds 24 compact discs, ideal storage unit to protect your discs. Cat C-3900

WAS $19.95 **$16.50**

Car Speaker DSE Door Mount

40w. max. 3 way door mount speaker system.
Cat A-7055

WAS $49 **$39 Pr**

Car Aerial

Ideal replacement aerial for Mazda Pilla can be utilised for other cars too.
Cat A-7325

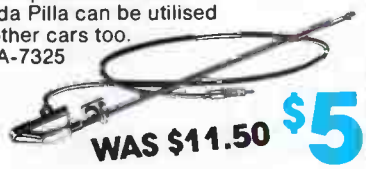

WAS $11.50 **$5**

Cassette Carry Pouch

$8.75 WAS $19.95

Wow! Now take a swag of your favourite tapes anywhere with this superb carry pouch! Holds up to 12 tapes. Pouch rolls up into a convenient 'pack anywhere' shape. Features adhesive tape for car dash mounting. Cat C-3820

DICK SMITH ELECTRONICS DICK SMITH ELECTRONICS DICK SMITH ELECTRONICS

World Radio History

NOT ALL STOCK AVAILABLE AT ALL STORES — TO AVOID DISAPPOINTMENT PLEASE PHONE YOUR NEAREST DSE STORE.

SELLOUT!

Tobor

WAS $49
$35

Amazing robot with a fully working arm and claw. Six separate control levers for raising his arm, open and close his claw. He can lift objects (up to 100g). A great introduction into robotics.
Cat Y-2065

High Range Level Controls

$3
WAS $3.95

Whether you have ready built speakers, or you're making your own speakers, this fader will give you the control you need over the sound from your system. Dual concentric, heavy duty wire wound elements ensure proper loading of the crossover and amplifier at all times.
Cat C-7212
•High Power handling capacity •Attractive & easy to mount •Latest flush design •Fully sealed front and back-no air leaks! • 2dB calibration markings •Available with either high or midrange labels.

Bicycle Computer

WAS $39.50

This incredible high precision bicycle computer is a useful and fun accessory for the pleasure rider, serious competitor or exercise enthusiast. Suits any bike with standard spokes.
Cat Y-3010
$30

Instrument Case

$19.95
WAS $34.95

What a case! It will make any grotty project look a million dollars! With multi-way tilting bail to hold case at any angle, has rubber feet too! Dress up your project. Buff coloured, size 210(w) x 270(d) x 73(h).
Cat H-2525

Forever Light

WAS $14.95

Everyone who sees this is amazed! Solar cells keep rechargeable cells topped up. Squeeze the case and a high brightness yellow LED lights! Gives more than enough light to find a keyhole, etc. And it comes complete with keychain.
Cat Y-1075
$11.50

'Giant' Rubber Feet

WAS .60¢
20¢

Excellent value! And very practical for hobbyists' needs. Place under project cabinets to prevent slipping, scratching table surface. Also provides ventilation for power projects.
Pk/4. Cat H-1738

The Big Guns

WAS $5.95
$2.50

The incredible Molon reluctance synchronous 230 volt motors. Heavy duty cast-iron outer casing, they're quality manufactured in USA. Cat J-1016

Power Plant!

WAS $1.50
50¢

Wow! Quality Matsushita brand (ie National Panasonic) 13.2 volt DC motors. With 2.5mm shaft, they're 45mm in diameter and ideal for those larger projects. Cat J-1018

Test Lead Set

Ideal for the hobbyist! This deluxe test lead set will have all you should need for the workshop or toolbox. Screw in any of the 14 adaptors and plugs and you will see that it's truly versatile.
Cat W-4526

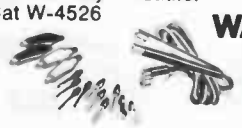

WAS $8.45
$6

TOOLS HALF PRICE

Phillips

WAS $1.95
Phillips head screw driver: 125x5x85x 18mm. Cat T-4050
95¢

Baby Drivers

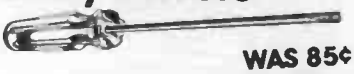

WAS 85¢
For light electrical work: 50x49x11mm. Cat T-4080
40¢

WAS $1.00
Ideal for general purpose work: 75x 4.5x73x16mm. Cat T-4085
50¢

Heavy Driver

WAS $2.25
Tough driver for heavy-duty jobs: 125x6x90x 25mm. Cat T-4100
$1.10

Alignment Tool

Screwdriver Type

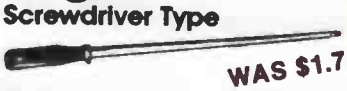

WAS $1.75
Plastic screwdriver with steel spring tip: 100mm. Cat T-4510
$1.85

Piercing (Fret) Saw

WAS $14.25
An absolute MUST for the modelmaker, hobbyist, etc. Fully adjustable universal type saw frame complete with 3 blades.
Cat T-4965
$7.10

Saw Blades

When you need replacements there is a choice of three special SKS alloy blades in packs of 12:
Extra Fine: Cat T-4966
Fine: Cat T-4967
Medium: Cat T-4968
WAS $2.75
$1.35

DICK SMITH ELECTRONICS DICK SMITH ELECTRONICS DICK SMITH ELECTRONICS

World Radio History

Stingray HF Marine Transceiver

SPECIAL PRICE PACKAGE DEAL
— fitted with 2182kHz complete with 2182 whip and base!

$2495

PRODUCTS AVAILABLE ON ORDER IF NOT IN STOCK IN ANY STORE.

Quality performance and ease, it's all here with the Stingray! This powerful 100W SSB marine transceiver will handle any of the marine channels with ease. Suitable for all HF marine frequencies including emergency club, chatter frequencies, etc. Why settle for second best? Very heavy construction makes it a rugged workhorse — so you can count on it in a crunch! Plug-in frequency cards give you single knob selection over the 2-30MHz range so selection is childs play. Comes complete with mounting hardware and mic — just take away and fit in a day!

Just look at these value for money features:
- 100W SSB
- Suitable for any marine channels
- 2.30MHz range
- Plug-in frequency cards for single knob selection and much more! Cat D-1410

NORMALLY $2499 just for the transceiver

Antenna Tuning Unit

$699

— Suitable for use with longwire or backstay antennae etc. for maximum range

Say goodbye to all those antenna matching hassles, once and for all! The Stingray Antenna Matching Unit can match your transceiver to any antenna without fuss or bother. Why waste time adjusting equipment when you can be out there having a good time?
You'll get maximum performance from your transceiver with minimum risk of damage from high SWR. Operates over the 2-30MHz range. Get the most from your transceiver — your safety depends on it!
Cat D-1412

Stingray Noise Blanker/Mute Card

Accessory for Stingray HF Marine radio. Effectively reducing annoying background noises. Easily plugs into transceiver. Cat D-1414

$199

T.V. Antenna Bargains!

Stingray Loaded Whip Antenna

2182KHz loaded whip that puts a 'sting' into marine communications. Operates on the international marine distress frequency. Cat D-1418

IDEAL BACKUP ANTENNA **$199**

UHF/VHF Antenna

Here's one antenna to suit both UHF & VHF. High gain with corner reflector for top UHF performance is ideal for fringe areas. Cat L-4018
7.5dB gain

$89.95

Combined UHF/VHF

Why put up two antennas when one antenna will give you both UHF and VHF signals? One of our most popular antennas.
Cat L-4020
6dB gain

$69.95

Ghost Buster Antenna

Live to close a signal source? Picture quality reduced by excessive ghosting! Here's the answer: DSE's amazing Ghost Buster! Cat L-4023

$99

Indoor Antenna

If you're lucky enough to live in a strong signal area, you'll probably get by with one of these spiral antennas, even with colour.
Cat L-4010
300 ohms impedance

$9.95

Rabbit Ears...

When an outdoor antenna isn't possible or connecting a second TV set is too much trouble, count on the good old rabbit ears... the indoor antenna that sits on your TV set. Cat L-4015

$16.95

BITS 'N' PIECES BARGAINS FOR YOU!

7400 Quad 2 input NAND gate Cat Z-5010	Was 50¢	**Now 30¢**
7401 Quad 2 input NAND o/collector Cat Z-5011	Was 50¢	**Now 30¢**
7402 Quad 2 input NOR gate Cat Z-5012	Was 60¢	**Now 40¢**
7404 Hex inverter Cat Z-5014	Was 75¢	**Now 50¢**
7405 Hex inverter open collectors Cat Z-5015	Was 60¢	**Now 40¢**
7408 Quad 2 input AND gate Cat Z-5018	Was 60¢	**Now 40¢**
7410 Triple 3 input NAND gate Cat Z-5020	Was 60¢	**Now 40¢**
7414 Hex Schmitt trigger Cat Z-5024	Was 85¢	**Now 60¢**
7420 Dual 4 input NAND gate Cat Z-5030	Was 50¢	**Now 30¢**
7430 8 input NAND gate Cat Z-5035	Was 60¢	**Now 40¢**
7473 Dual J-K master/slave flip flop Cat Z-5073	Was 60¢	**Now 40¢**
7476 Dual J-K master/slave flip flop Cat Z-5076	Was 60¢	**Now 40¢**
7485 4 bit magnitude comparator Cat Z-5085	Was $1.10	**Now 65¢**
7486 Quad 2 input EXCLUSIVE-OR gate Cat Z-5086	Was 70¢	**Now 50¢**
7490 Decade Counter Cat Z-5090	Was 75¢	**Now 50¢**
7492 Divide by 12 counter Cat Z-5092	Was 90¢	**Now 50¢**
7495 4 bit L-R shift register Cat Z-5095	Was $1.25	**Now 60¢**
74123 Dual re-triggerable monostable Cat Z-5263	Was $1.10	**Now 60¢**
74157 Quad 2 input multiplexer Cat Z-5267	Was 75¢	**Now 50¢**

GW Microswitch pack

Quality and value! For a variety of projects: on/off situations, 12V car alarms, movement sensors and more. Pk/10. Cat J-1036

WAS $3.95 **$2**

Scotchlock UG Quick Connectors

Makes life so simple! Neatly and quickly secures wire connections on all projects. And so affordable too. Pk/10. Cat J-1020

WAS 80¢ **40¢**

UHF Helical Filters

High quality UHF Helical Filter (also known as helical resonators) — as used in our UHF amateur transceiver kit. Cat L-1850

WAS $7.95 **$4.95**

TV 'Ghost Killer' Antenna

Get the most from your expensive TV with this affordable antenna. Cat L-4030

WAS $79 **$59**

Luminous Tabs

Find power point switches in the dark.
Cat P-5350

WAS $1.99 **99¢**

Using Your IBM Personal Computer

All the 'low-down' on the working and capabilities of your IBM PC... from hardware to software
Cat X-8630

WAS $19.95 **$15**

Wideband Op Amp

Draws little current, provides wide band width!
Cat Z-6010

WAS $7.20 **$3.50**

LM187IN RC Encoder

Translates a digital language into code.
Cat Z- 6103

WAS $6.95 **$5**

LM1872N RC Decoder

Converts received codes into plain language.
Cat Z-6104

WAS $7.95 **$3.95**

Programming The Z80

Over 600 pages that provide an educational text and reference manual of machine language.
Cat X-2364

WAS $19.95 **$15**

Assembler Language Programming: IBM PC

Teaches you how an IBM PC works, about 8088 microprocessing, programming in assembler language and more! Cat X-8632

WAS $29.95 **$15**

Microcomputer Software Buyer's Guide Vol. 1 & 2

Over 300 pages with indepth coverage of major software packages for spread sheets, communications, database and graphics.
Vol 1... Cat X-2371
Vol 2... Cat X-2372

$9.95

DICK SMITH ELECTRONICS DICK SMITH ELECTRONICS DICK SMITH ELECTRONICS

World Radio History

KITS GALORE

TV Masthead Amp (Mk2)

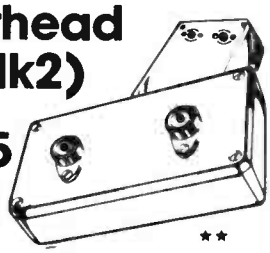

$34.95 ★★

Don't put up with lousy TV (we can't do much about the content, but this kit should fix the pix!) Reduces or even eliminates snow, great for reducing ghosting. Covers both UHF and VHF TV bands plus FM bands. Includes 240V supply in price. Cat K-3232

Economy Car Alarm

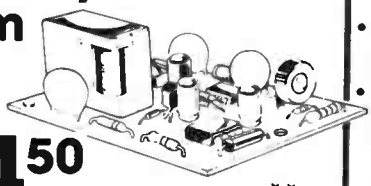

$14.50 ★★

This alarm senses the voltage drop in your car's electrical system when a theif breaks into it. There's a visual warning for theives so that chances are they will not even attempt a break-in. Easy to install saves a lot of trouble. Cat k-3250

Negative Ion Generator

$34.50

Employs a voltage multiplier with a DC voltage of approximately 8100 volts. Consists of 24 capacitor diode stages which multiply the 240V AC mains. The ionizer is housed in a plastic box to avoid the possibility of arcing which leads to the production of ozone. Cat K-3333

60W Mosfet Module

Not including power supply

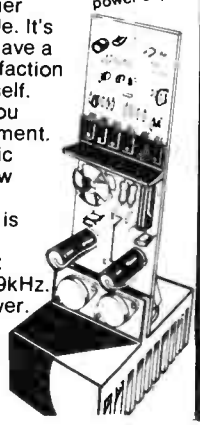

Improve the performance of your medium power amlifier with this affordable module. It's a kit, which means you'll save a bundle and have the satisfaction of saying you built it yourself. And what performance! You won't believe the improvement. Second and third harmonic distortion figures are below 0.001% at full power, and intermodulation distortion is below 0.003% at 10kHz. Frequency response is flat within ±0.4dB from 8Hz-29kHz. Noise is -100dB at full power. Cat K-3441

$79.95 ★★

Home Alarm

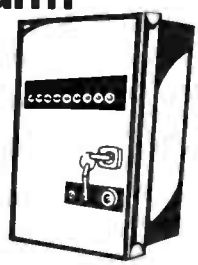

EA have thought of just about everything in the development of this design. It offers features which you'd normally find on $200 and more commercial units (even ours!) ★★★

It offers:

- Security key operation for both alarm function and box access
- 2 instant and six delay sectors, capable of handling normally open or normally closed in any mix
- Inbuilt mains power supply with battery backup
- Siren (up to two speakers) PLUS bell (relay) output and also capable of driving telephone diallers, strobes, etc etc.
- Inbuilt local test facilities, including buzzer and we've made the EA design even better: a heavier steel case, for example. our kit includes our specailly prepared instructions — so you won't have any problems!

Complete kit including case and all electronics. **$129**
Cat K-3424
Battery to suit: 12 Volt 1.2Ah Gel Cell
Cat S-3315 $22.50

LCD Panel Meter

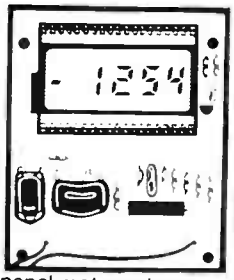

$34.95 ★

A versatile accurate panel meter using a large liquid crystal display for low power consumption. The PC board design allows for maximum flexibility to cater for varied mounting arrangements. The low cost makes it ideally suited as a readout device on many projects, at both amateur and professional level. Cat K-3450

R-L-C Bridge

★★

Measure the values of new and used components easily and simply. You can measure resistance (10 ohms to 10 Megohms), capacitance (10pF to 10 uF) and inductance (down to a few hundred microhenries). Battery not supplied. Cat K-3468 **$44.50**

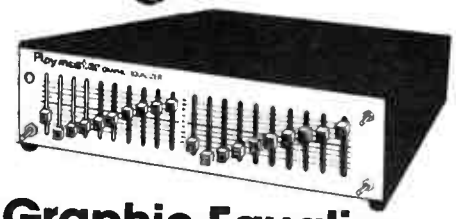

Graphic Equaliser

Get total control and flexibility with your sound system. With cut and boost of up to 13dB per channel you can make up for deficiencies in your own listening area and sound source and even create special effects. (Big, booming bass: bewdy!) You can even make equalised tapes of those precious records. Featuring professional quality brushed aluminium front pannel.

Cat K-3500

ONLY $129

Music Generator

This is a great little kit for the beginner or experimenter. It uses a very special IC which is pre-programmed with two very popular tunes: 'Green Sleeves' and 'Home on the Range'. It also has the popular 'ding dong' plus an alarm tone. A few more components and a printed circuit board complete the kit. It is intended for novelty or alarm applications. Cat K-3512 ★

$12.95

Stereo TV Decoder

★★★

$199

You have a choice of building the decoder with it's own power amplifiers - or you can simply feed the output into your hi fi stereo system to cut costs even further. The result: stereo TV sound you'll be proud of! And even more: included is a TV tuner which picks up UHF - so if your telly can't quite manage UHF, you're even further in front! Cat K-6325

Ignition Killer

Ingenious but simple circuit based on a 555 timer that literally kills your car ignition and then re-sets itself, making the theif think something is wrong with the engine. The theory is he'll then go and pinch someone elses car instead. Cat K-3255 **$19.50**

DICK SMITH ELECTRONICS DICK SMITH ELECTRONICS DICK SMITH ELECTRONICS

World Radio History

Two Tape Answering Machine

They said it couldn't be done... but we've actually improved our popular original two tape answering machine which has sold thousands over the past few years. This new model, incorporating absolutely the latest state-of-the-art design, stands head and shoulders above any other one or two tape machines available at any price!

Cat F-6135

Telecom Authorised **$299**

Single Tape Answering Machine

Telecom Authorised

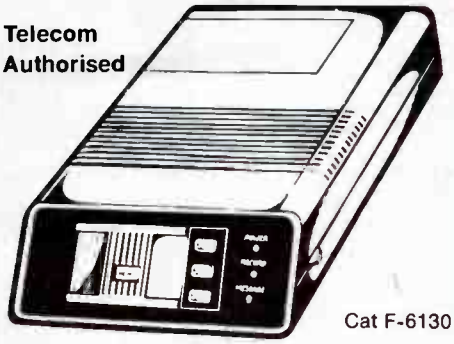

Cat F-6130

Imagining an economy single tape telephone answering machine with more advanced features than most dual taped machines! This fantastic machine has got to be the simplest of all to use... in fact, the solid state microprocessor circuitry is actually activated by the slide of a button. Revolutionary VOX (voice activated) remote control — no costly beepers required. Voice activated message time means more messages per tape and no wasted space. Unbelievable value!

while stocks last! **$229**

Wow! Phone For Under $25

Own your phone... it's so inexpensive at DSE. This beauty has push button dialling, mute, redial and more. Ideal first or second phone.

Cat J-1027

Bonus Phone Holder

$24.95

Thanks For The 'Memory'

Telecom Authorised

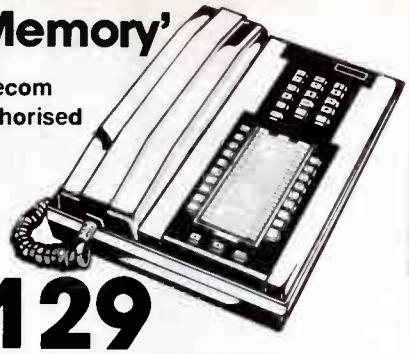

$129

A phone that's a real time saver... program up to 80 numbers in memory for automatic single button dialling. PLUS a host of other impressive features:

- Electronic security lock
- Re-dial and mute buttons
- Access pause for PABX systems

Cat F-5165

ACCESSORIES

DOUBLE ADAPTOR

Get away with it! Connect two phones or a phone and an answering machine without disconnecting and reconnecting.

Cat F-5112

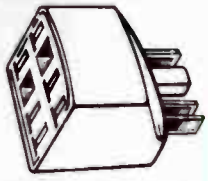

$14.95 TELECOM AUTHORISED

EXTEND YOURSELF...

Handy, inexpensive phone extension cords provide 'miles' of freedom to move the phone about the house or outside. Available in two sizes:

WOW!

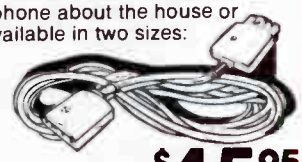

10 metre Cat F-5115 **ONLY $15.95**

15 metre Cat F-5103 **ONLY $19.95**

PLUGS/SOCKETS

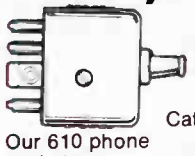

DSE's Telecom type 605 phone plugs... the right connection when installing your own phone.

Cat F- 5117

Our 610 phone sockets are designed to Telecom standard... and DSE's versatility: ideal for use with double adaptors.

Cat F-5118

$3.95 ea.

TELECOM AUTHORISED SEE THE FULL RANGE OF DSE PHONES AND ACCESSORIES AT YOUR NEAREST DSE STORE!

DSE's Own Feature Packed Cordless Phone

At home how many times has the phone rung while you've been resting by the pool, soaking in the bath... and all those other inconvenient moments? DSE's Cordless Phone ends all those problems! Take the remote handset with you, indoor and out, ready for any call: effective up to 100m. Handset features modern push button dialling, redial, mute and volume control. Features 'Power On' and 'In Use' LED indicators, full duplex system for interference free conversations and programmable security to prevent unauthorised handset use.

Cat F-5816 **$249**

Telecom Authorised

'Hands-Free' Push Button Memory Phone

$249

Telecom Authorised

Nine-number memory allows quick one-button dialling of frequently used numbers. And if the last number dialled is engaged, one button 're-dial' function automatically redials the number: it's a real time saver! Use the mute button to ensure total privacy on important/personal calls. Features PABX or direct line operation, Earth key and Hookflash transfer plus switchable DTMF (tone) and Decadic (pulse). Ideal for either desk or wall mounting. Cat F-5135

10 Memory Phone

Our popular 10 Memory Telephone. No need to go searching for those elusive numbers. There're all here at the touch of a button. Has mute switch, auto redial and much more!

Cat F-5190 **$29.95**

while stocks last!

DICK SMITH ELECTRONICS DICK SMITH ELECTRONICS DICK SMITH ELECTRONICS

World Radio History

Funway Jumbo Gift Box

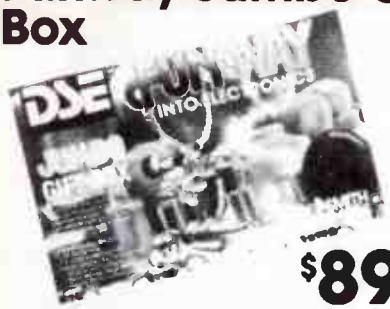

$89.95

Here's even bigger value! This pack isn't called the Jumbo pack for nothing: it's chocka-bloc with over 30 projects and a quality soldering iron to build them all. Almost $100 value at a price most parents can afford... and what price can you place on your children's future. This may be the best gift a parent can give. Cat K-2690

Pre-scaler

Improve the performance and increase the range of your K-3439 Frequency Counter to a more professional range of operation... 10-500MHz. This kit adapts to the existing frequency counter PC board. Cat K-3432 $34.50

Microwave Leakage Detector

$14.95

Microwave ovens are fantastic - but are they completely safe? Yours could be leaking dangerous radiation! Check it out with this handy meter. No batteries required.
Cat K-3095

LED Tacho

Don't spend a fortune buying a tachometer -build your own and save! Displays engine speed in an analogue form in an illuminated row of LED's. Instructions included - a great kit!
Cat K-3240

ONLY $24.50

Stereo Preamplifier

The amazingly versatile unit can be built as a magnetic cartridge preamp (for upgrading your stereo), a tape preamp or an auxiliary preamp with 40, 55 or 80dB gain. It is extremely simple: uses only one special IC and is very small, all parts fit on a PCB less than 65mm square. Full instructions are supplied. Cat K-3427

$8.50

Infrared 240 Volt Controller

NEW FOR '86

How many times have you wanted to switch a power point 'ON' or 'OFF' when it's across the room? With this fantastic Infrared Remote Control switch, you can switch on the TV, lamp, radio or many mains appliances without moving from the comfort of your bed or chair.

Cat K-3428

BARGAIN!

ONLY $69.95

STORE LOCATIONS

NSW				ACT				SA			
Swift & Young Sts.	Albury	(060)	21 8399	96 Gladstone St	Fyshwick	(062)	80 4944	Wright & Market Sts	Adelaide	(08)	212 1962
T55 Terrace Level	Bankstown Sq	(02)	707 4888	VIC				Main South & Flagstaff Rds	Darlington	(08)	298 8977
Shop 1, 65-75 Main St	Blacktown	(02)	671 7722	Creswick Rd & Webster St	Ballarat	(053)	31 5433	Main North Rd & Darlington St	Enfield	(08)	260 8088
613 Princess Hwy	Blakehurst	(02)	546 7744	145 McCrae St	Bendigo	(054)	43 0388	24 Park Terrace	Salisbury	(08)	281 1593
Oxford & Adelaide Sts	Bondi Junction	(02)	387 1444	Shop 46,Box Hill Central,Main St	Box Hill	(03)	890 0699	WA			
531 Pittwater Rd	Brookvale	(02)	93 0441	Hawthorn Rd & Nepean Hwy	East Brighton	(03)	592 2366	Wharf St & Albany Hwy	Cannington	(09)	451 8888
Campbelltown Mall Queen St	Campbelltown	(046)	27 2199	260 Sydney Rd	Coburg	(03)	383 4455	66 Adelaide St	Fremantle	(09)	335 9733
Shop 235, Archer St Entrance	Chatswood Chase	(02)	411 1955	1150 Mt Alexander Rd	Essendon	(03)	379 7444	William St & Robinson Ave	North Perth	(09)	328 6944
147 Hume Hwy	Chullora	(02)	642 8922	Nepean Hwy & Ross Smith Ave	Frankston	(03)	783 9144	Raine Square, 125 William St	Perth City	(09)	481 3281
164 Pacific Hwy	Gore Hill	(02)	439 5311	Shop 9 110, High St	Geelong	(052)	43 8522	TAS			
315 Mann St	Gosford	(043)	25 0235	291-293 Elizabeth St	Melbourne City	(03)	67 9834	25 Barrack St	Hobart	(002)	31 0800
4 Florence St	Hornsby	(02)	477 8833	Bridge Rd & The Boulevarde	Richmond	(03)	428 1614	NT			
Elizabeth Dr & Bathurst St	Liverpool	(02)	600 9888	Springvale & Dandenong Rds	Springvale	(03)	547 0522	17 Stuart Hwy	Stuart Park	(089)	81 1977
450 High Street	Maitland	(049)	33 7866	QLD							
621-627 The Kingsway	Miranda	(02)	TBA	157-159 Elizabeth St	Brisbane City	(07)	229 9377				
173 Maitland Rd, Tighes Hill	Newcastle	(049)	61 1896	166 Logan Rd	Buranda	(07)	391 6233				
Lane Cove & Waterloo Rds	North Ryde	(02)	88 3855	Gympie & Hamilton Rds	Chermside	(07)	359 6255				
George & Smith Sts	Parramatta	(02)	689 2188	Queen Elizabeth Dr & Bernard St	Rockhampton	(079)	27 9644				
The Gateway High & Henry Sts	Penrith	(047)	32 3400	Gold Coast Hwy & Welch St	Southport	(075)	32 9863				
818 George St	Railway Square	(02)	211 3777	Bowen & Ruthven Sts	Toowoomba	(076)	38 4300				
125 York St	Sydney City	(02)	267 9111	Kings Rd & Woolcock St	Townsville	(077)	72 5722				
Treloar's Bldg, Brisbane St	Tamworth	(067)	66 1711	Cnr Pacific Hwy & Kingston Rd	Underwood	(07)	341 0844				
263 Keira St	Wollongong	(042)	28 3800								

Dear Customers,
Quite often, the products we advertise are so popular they run out within a few days, or unforseeen circumstances might hold up shipments so that advertised lines are not in the stores by the time the advert appears. And very occasionally, an error might slip through our checks and appear in the advert (after all, we're human too!) Please don't blame the store manager or staff: they cannot solve a dock strike on the other side of the world, nor fix an error that's appeared in print. If you're about to drive across town to pick up an advertised line, why not play it safe and give them a call first ... just in case! Thanks. Dick Smith Electronics.

MAJOR DICK SMITH ELECTRONICS AUTHORISED RESELLERS

NSW: • **Ballina:** A. Cummings & Co. 91-93 River St 86 2284 • **Ulladulla:** Pauls Electronics, 10 Wason Street, 55 3989 • **Bowral:** F.R.H. Electrical, 28 Station St 61 1861 • **Broken Hill:** Hobbies & Electronics, 31 Oxide St 88 4098 • **Charlestown:** Newtronics 131 Pacific Hwy 43 9600 • **Coffs Harbour:** Coffs Harbour Electronics, 3 Coffs Plaza, Park Ave 56 5684 • **Deniliquin:** Deni Electronics, 220 Cressy St, 81 3672 • **Gosford:** Tomorrows Electronics & HiFi, 68 William St, 24 7246 • **Lismore:** Decro 3A/6-18 Carrington St, 21 4137 • **Port Macquarie:** Hall of Electronics, Horton Centre, Horton St, 83 7440 • **Orange:** Fyfe Electronics 173 Summer St, 62 6491 •**Tumut:** Tumut Electronics Wynyard St, 47 1631 • **Tweed Heads:** Stuart Street Electronic Sales, Stuart St, 367 5744 • **Swansea:** Swansea Electronics, 184 High St, 71 1674 • **Wagga:** Phillips Electronics 82 Forsyth St, 21 6558 • **Windsor:** M & E Electronics, Sh 7, Mc Ewans Arcade, 206 George St, 77 5935 •**Young:** Keith Donges Electronics 186 Boorowa St 82 1279 **VIC:** • **Hamilton:** John Thompson & Co. 138-148 Gray St, 72 2000 • **Echuca:** Webster Electronics, 220 Packeham St 82 2956 • **Mildura:** McWilliams Electronics 110A Langtree Ave, 23 6410 • **Morwell:** Morwell Electronics, 95 George St, 34 6133 • **Shepparton:** GV Electronics Centre 100 High St, 21 8866 **QLD:** • **Bundaberg:** Bob Elkin Electronics, 81 Bourbong St, 72 1785 • **Cairns:** Electronic World Shop 27 K-mart Westcourt Plaza, 51 8555 • **Gladstone:** Purely Electronics Shop Cnr. Herbert & Auckland Sts 72 4321 • **Mackay:** Stevens Electronics, 42 Victoria St, 51 1723 • **Maryborough:** Keller Electronics, 218 Adelaide St, 21 4559 • **Mt Isa:** Outback Electronics Shop 71 Barkley Hwy 43 3331 • **Rockhampton:** Purely Electronics, 15 East St, 21 058 **SA:** • **Mt Gambier:** Hutchessons Communications, 5 Elizabeth St, 25 6404 • **Whyalla:** Eyre Electronics Shop 2 Forsythe St, 45 4764 **WA:** • **Albany:** Micro Electronics 133 Lockyer Ave 41 3432 **TAS:** • **Launceston:** Wills Electronics 5A The Quadrant, 31 5688

DSX PRESS ORDER SERVICE

ORDERS OVER $75 FREE DELIVERY

Use your Bankcard, Mastercard or Visacard.
Just Phone **008 226610** (toll free) for, despatch of your orders. Enquiries: By mail or phone (02) 888 2105
Fax (02) 888 3631 Telex AA20036

POST & PACKING CHARGES	Order Value	Charge	Order Value	Charge
	$5.00 - $9.99	$2.00	$50.00 - $75.00	$6.50
	$10.00 - $24.99	$3.50	$75.00 or more	N.A.
	$25.00 - $49.99	$4.50		

Terms available to approved applicants
SA Customers: Credit facilities available through AGC Adelaide: 10 Pulteney St Adelaide

VISA MasterCard bankcard welcome here

DICK SMITH ELECTRONICS PTY LTD

P.O. Box 321, North Ryde N.S.W. 2113. Tel: 888 3200

World Radio History

Woods wanders off on the wild side

Geoff Wood, from the electronics firm of the same name has wandered across to the north side of the harbour, deserting beautiful downtown Rozelle for the leafy wilds of Lane Cove.

You'll find the ever-affable Geoff, located on the corner of Burns Bay Rd and Beatrice Street, right next door to the newsagent (where, if you-re quick, you'll be able to buy your monthly copy of AEM). It's one block north of the Penrose St lights (intersection of Burns Bay Rd).

The new store features more room and a better floor plan than his previous 'hole in the wall' joint squeezed between the local hardware shop and the corner milk bar. And now, parking's a whole lot easier.

As ever, if not more than ever, take his motto to heart and "see Wood for chips"! He specialises in the National Semiconductor range, but carries Motorola, Philips/Signetics, Exar, general Instruments, etc, etc. And don't forget he stocks AEM pc boards. Take note of the new address and 'phone number. **Geoff Wood Electronics, 229 Burns Bay Rd, Lane Cove 2066 NSW. (02) 427 2676.**

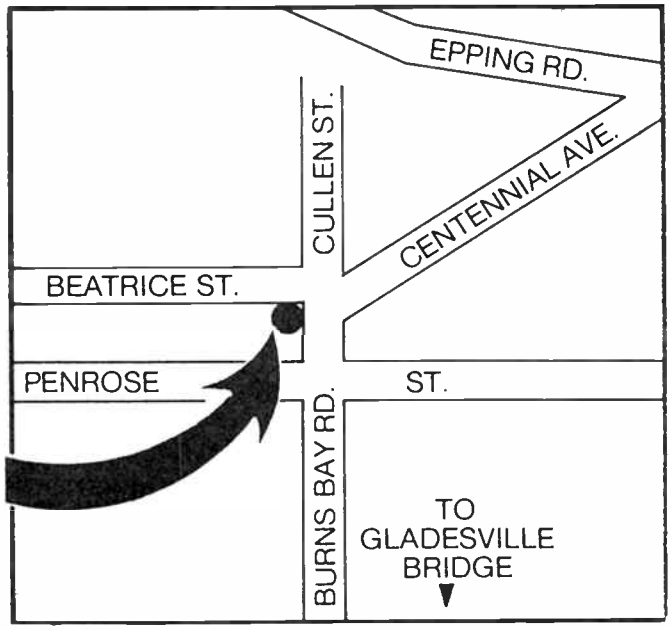

3SK121 GaAsFETS

Perchance this month's Star Project has excited your interest in playing with GaAsFET technology. Well, you might be lucky. You can buy 3SK121s over the counter, and for but a modest sum.

Dick Smith Electronics indicate they'll be stocking 3SK121s as part of their normal line of semiconductors. Hurry in to your nearest DSE store and harry the hapless store staff. Otherwise, try their mail order service at **PO Box 321, North Ryde NSW 2113. (02) 888 3200.**

In addition, the Melbourne-based inporter-distributor, Imark, indicates, they carry the 3SK121 as a normal stock line. And let us jog your memory (only 256 bits? Uh!, must've been a bad night lastnight) that they carry the CQ series of semiconductor manuals, published by CQ in Japan. A very handy set of books. There are 13 in the series, covering Japanese semiconductors. Each costs $12.50, plus $5 post and packing charge for one to all 13 manuals. Contact **Imark, 167 Roden St, West Melbourne 3003 Vic. (03) 329 5433.**

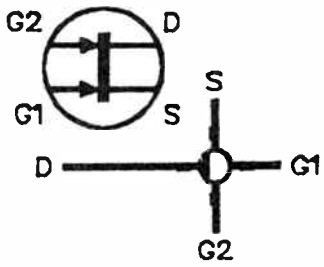

PROJECT BUYERS GUIDE

Some constructors have enquired as to where they might obtain kits for our AEM5504 Electromyogram (March issue feature project). Look no more. You should contact Malcolm Ling at Eagle Electronics in Adelaide. He's located at 4 Unley Road, Unley 5061 S.A. (08) 271 2885.

The AEM4610 Supermodem is obtainable as a kit through the special offer advertised elsewhere in the magazine.

This month's Star Project, the UHF GaAsFET Masthead Preamp, is obtainable from Dick Smith Electronics and kits should be in stock in DSE stores by the time you read this.

CONTEST WINNERS!

Here are the results of two very popular contests we ran recently, first up being the **Elami Jr Robot Contest** which ran in last November's and December's issues, followed by the **Yaesu FRG-9600 Scanner Contest**, which ran from November through January. We were really snowed under with entries, which has taken us some time to sort through and read and choose winners. On with the show!

ELAMI JR ROBOT CONTEST

Five questions were asked and, as a tie-breaker, we asked contestants to tell us in 30 words or less what features of Elami Jr they found attracted them to begin exploring robotics. Here are the answers to the questions:

1) Robot derives from a Czech word, robota, which is variously given as meaning 'work' or 'enforced labour'.
2) Dr John Mauchley and J. Presper Eckert built the world's first digital electronic computer.
3) Nick Holonyak Jr built the world's first gallium arsenide LED in 1962.
4) Elami Jr has four facial expressions, plus an additional two lip movements in speech mode.
5) There are six LEDs on top of Elami Jr's head.

The winner? — Les Jones of Victoria Park, W.A.

YAESU FRG-9600 SCANNER CONTEST

Dick Smith Electronics donated the prize for this very popular contest, we're sorry there can only be one winner! Once again, we asked five questions and sought contestant's opinions in 30 words or less what it was about the FRG-9600 that they found attractive. First, the answers to the questions:

1) Single sideband was the reception facility unique to the Yaesu FRG-9600 (at the time it was released).
2) The FRG-9600 employs both triple and double conversion.
3) The late Fred Bail (VK3YS) first imported Yaesu equipment into Australia.
4) Dick Smith Electronics has been selling Yaesu for about 10 years.
5) The minimum tuning step of the FRG-9600 is 100 Hz, available in both the AM-narrow and SSB modes. (We accepted either 100 Hz/AM-N, 100 Hz/SSB or 100 Hz and AM & SSB).

The winner, **Graham Blanchett VK2CJB, of West Pennant Hills NSW,** succintly summed up the features of the FRG-9600 that attracted him, it was touch-and-go between him and four or five others, but Graham's turn of phrase won the day. He said, "The all-mode capability, together with 100 memories and a very wide frequency range make the Yaesu FRG-9600 a most attractive unit."

There were some quite imaginative entries, but the one that touched everyone was from Thomas Stamp of Mooroopna, Victoria, who simply said, "I haven't got one!". To the ASIO agent from Herston, Qld, we sympathise if your budget's been cut, but you'll just have to go back to Mr Hawke. Or, if you sent us a plain brown envelope self-addressed in invisible ink, we'll send you the plans to make your own scanner!

Thank you, one and all!

World Radio History

GEOFF'S MOVED!

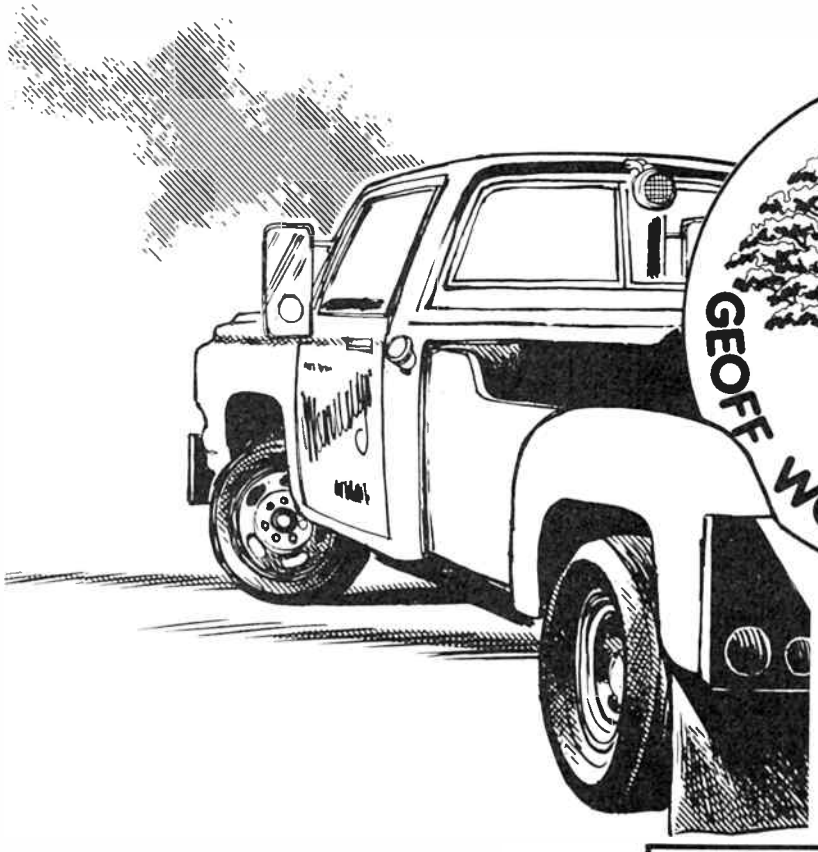

GEOFF WOOD ELECTRONICS

Don't forget Wood for Chips!

- **LARGER PREMISES**
- **BIGGER STOCKS**
- **EVEN BETTER SERVICE**

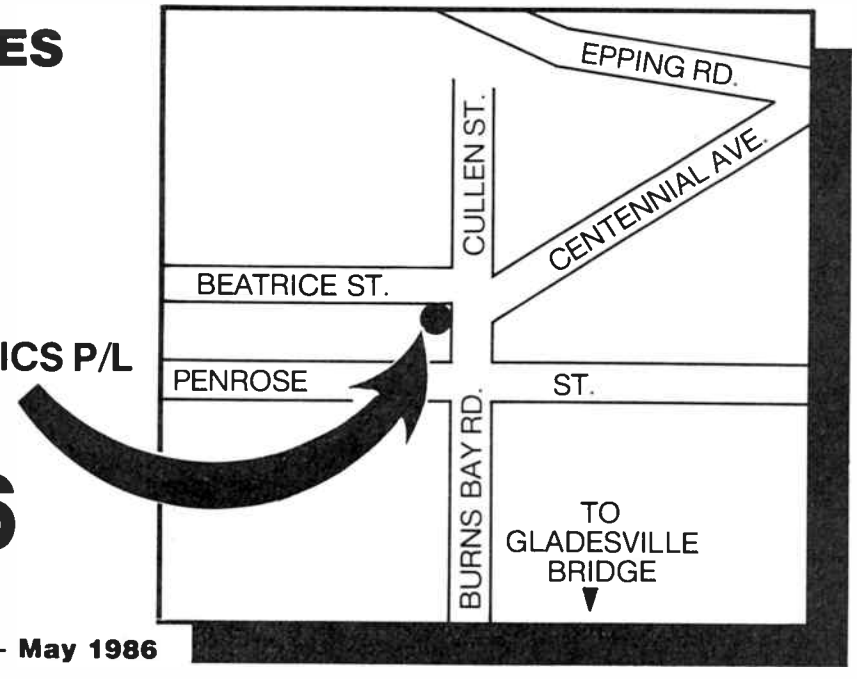

GEOFF WOOD ELECTRONICS P/L
229 BURNS BAY ROAD
LANE COVE 2066
TEL: 427 1676

World Radio History

Build this FM band antenna for top results from your tuner

Roger Harrison

Here's an antenna designed to cover the 88-108 MHz FM stereo broadcast band. It features modest gain, a 'clean' radiation pattern to reduce multipath distortion and the log-periodic design ensures 'flat' coverage across the whole band. It can be constructed by any 'handyman'/hobbyist with modest tools using parts commonly available in hardware stores.

THERE'S NO DOUBTING the popularity of the FM broadcast band, particularly among devoted audio enthusiasts. The variety of stations and programmes available, in the capital cities at least, is truly staggering. That the top FM stations have successfully ". . . taken the ball and run with it" from the AM band stations is a fact of life. Despite the recent onslaught of AM stereo, FM broadcasters claimably offer better quality sound.

However, while FM stereo tuners and receivers these days offer remarkable performance, they are unable to give of their best without an adequate signal at the antenna terminals. Weak signals and multipath reception reduce noise quieting (and hence dynamic range) and increase distortion. Dangling a bit of wire from the tuner/receiver's antenna terminals will not meet the requirement of having an adequate signal at the antenna. It's just not on. Only a properly installed, directional antenna installed outside will ensure the results you require.

Design considerations

The major problem in designing an antenna for the FM broadcast band is the very *breadth* of the band, frequency-wise. Extending 20 MHz from 88 to 108 MHz, that's a ratio of around 1.23 to 1. That most popular of directional antennas, the *Yagi*, is hard put to cover such a broad frequency range, so we either have to compromise with limited frequency coverage or try another antenna type.

Where coverage over a broad frequency range is required of a directional ('beam') antenna, the *log-periodic* design reigns supreme. It comes in various forms, the *log-periodic dipole array* (LPDA) being common in HF and VHF applications. It consists of a series of interconnected dipole driven elements, cut and spaced such that only a few elements are 'active' at a particular frequency. Such arrays can be designed to operate over frequency ranges of 2:1 or greater, and they have the singular advantage that their electrical characteristics — feedpoint impedance, gain, front-to-back ratio etc — remain more or less constant across the design frequency range.

Figure 1 shows the general arrangement of a log-periodic dipole array. Note how the elements form chords across a triangle, the apex of which is at the 'front' of the array. Note also that the elements have differing relative spacings, and

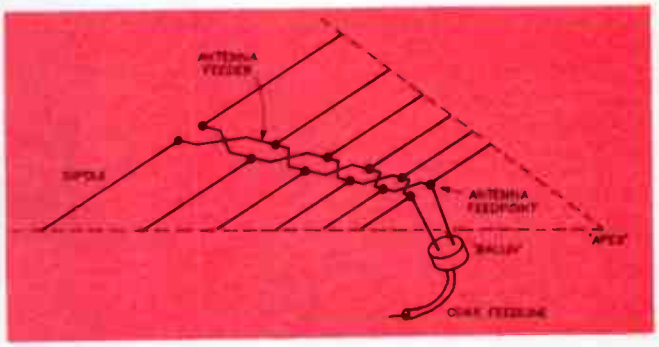

Figure 1. General arrangement of a log-periodic dipole array (LPDA).

that each is driven 180 degrees out of phase by alternating the antenna feed connections along the array. The element lengths and relative spacings increase smoothly along the array. It is these factors, along with the projected 'apex' angle, which permit smooth changes in operating frequency without variation in the antenna characteristics, the 'active region' of the antenna moving through the elements in the array as the operating frequency is varied.

The log-periodic antenna is so-called because the antenna feed characteristics vary periodically (that is, cyclically) with the logarithm of the operating frequency.

In designing this antenna, a number of practical mechanical considerations had to be taken into account. Firstly, the overall size of the array and the number of elements employed. Both considerations affect the final cost, but also affect the ease of construction and installation, which may be just as important as the cost. After going through the design exercise a few times, I eventually plumped for a four-dipole array with passive reflector, having a relatively short ▶

LEVEL

We expect that hobbyists who are

BEGINNERS

in electronics construction should be able to successfully complete this project.

World Radio History

Jaycar ELECTRONICS

CELEBRATING OUR NEW CATALOGUE WITH A 15% OFF

EVERYTHING SALE MAY ONLY

To order from Jaycar Telemail- Simply phone (008) 022 888 Toll free and pay the price of a local call. If that's busy, use our Telemail Hotline (02) 747 1888 for orders and enquiries.

If you don't have a copy of our brand new 100 page 1986 Engineers Catalogue, send us $2.00 and we will send you one. It's crammed with lots and lots of new products plus all the old favourites. And ANYTHING YOU BUY TAKE 15% OFF the price. 15% sale doesn't include freight/mail costs. No account sales, no backorders - goods must be in stock and shipped in May. We cannot accept orders to be shipped after May.

LS CHIPS AT SILLY PRICES.

[illegible]	[illegible]	[illegible]	[illegible]	[illegible]
[illegible]	[illegible]	[illegible]	[illegible]	[illegible]
[illegible]	[illegible]	[illegible]	[illegible]	[illegible]
[illegible]	[illegible]	[illegible]	[illegible]	[illegible]
[illegible]	[illegible]	[illegible]	[illegible]	[illegible]
[illegible]	[illegible]	1.25¢	62¢	[illegible]
[illegible]	[illegible]	1.25¢	62¢	[illegible]
[illegible]	[illegible]	1.25¢	62¢	[illegible]
25 5125	74LS125	1.25¢	62¢	[illegible]
25 5139	74LS139	1.45¢	72¢	58¢
25 5148	74LS148	3.95¢	1.97¢	1.50¢
25 5153	74LS153	1.20¢	60¢	48¢
25 5164	74LS164	1.40¢	[illegible]	56¢
25 5174	74LS174	1.40¢	796	56¢
25 5175	[illegible]	1.65¢	82¢	66¢
25 5244	74LS244	2.95¢	1.47¢	1.15¢
25 5273	74LS273	2.95¢	1.47¢	1.15¢
[illegible]	[illegible]	3.50¢	1.75¢	1.40¢

Prices include tax
As these are so low already do not take 15% off.

"UNIVERSITY OF HARD KNOCKS"

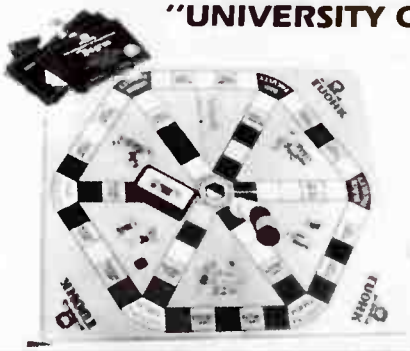

Board game for VIC 64.
Load the cassette into your VIC 64 which contains 5000 questions.
Then lay out the attractive vinyl covered playing board and play the game
Cat X96000

WAS $49.95
ONLY $35.00
SAVE 30%
(Do not take another 15% off.)

Jaycar ELECTRONICS
Incorporating ELECTRONIC AGENCIES
NUMBER 1 FOR KITS
Toll Free Hotline (008) 022 888
MAIL ORDER HOTLINE (02) 747 1888

N.S.W. SHOWROOMS
SYDNEY 117 York Street Tel (02) 267 1614
CARLINGFORD Cnr Carlingford & Pennant Hills Road Tel (02) 872 4444
CONCORD 115-117 Parramatta Road Tel (02) 745 3077
HURSTVILLE 121 Forest Road Tel (02) 57[illegible]
GORE HILL 188-192 Pacific Highway Cnr Bellevue Avenue Tel (02) 439 4799

QUEENSLAND BURANDA 144 Logan Road Tel (07) 393 [illegible]
MAIL ORDERS: P.O. Box 185 CONCORD 2137
HEAD OFFICE: 115-117 Parramatta Road CONCORD 2137
Tel (02) 747 2022 Telex 72293

SHOP HOURS
Carlingford Hurstville Sydney & Brisbane
Monday Friday 9am - 5.30pm Saturday 9am - 12pm
Gore Hill
Mon Fri 9am - 5.30pm Thurs 9am - 8.30pm Sat 9am - 12pm
Concord
Monday Friday 9am - 8.30pm

POST & PACKING

$5	$9.99	$2.[illegible]
$[illegible]	$24.99	$3.75
$25	$49.99	$4.[illegible]
$50	$99.99	$6.[illegible]
$100	$198	$8.[illegible]

ROAD FREIGHT ANYWHERE IN AUSTRALIA ONLY $13.50

MasterCard VISA

MAIL ORDER VIA YOUR PHONE

World Radio History

Jaycar sale continues

Listed below are products that we have to clear out. We must emphasise that in some cases only a few of each product is available at the time of publication of this magazine ad. Many products will sell out within ONE DAY of going on sale.
If you are a personal shopper, you may actually have to travel from one store to another to get what you want. We will not backorder (as no more will become available) and will issue either credit notes or refund cheques (please specify). If you have to travel a long distance to a store we suggest that you telephone first. We emphasise, however that we cannot "hold" goods for anyone by telephone order. So act quickly, only by acting quickly you could end up with a bargain of a lifetime. Do not take an extra 15% off special prices.

TELEMAIL PHONE NUMBERS
(008) 022 888 TOLL FREE
(02) 747 1888 HOTLINE

Cat. No.	Description	WAS	NOW				
AS 1000	Car Cass FM AM Stereo	$149.00	$120.00	ZT 2300	2N3PO 240V Controlled Diode	$8.95	$7.50
AC 1950	Mono Rec/Play Head	$14.95	$7.00	QP 5611	Gold Iron Temperature Meter	$29.95	$19.95
AC 1958	Mono Stereo Erase	$7.95	$4.00	QM 6110	DRMOS Case	$5.50	$1.50
AX 3501	Radio Stereo SW	$4.75	$2.25	RP 4828	Road Pressure Machine	$79.50	$40.00
AM 4101	SA 1 Mic Screw Adaptor	$1.95	$0.95	RP 4812	5K Log SW POT 16 IMP 5%	$2.50	$1.50
AM 4103	SA 3 Mic Screw Adaptor	$1.95	$0.95	RP 4852	25K Log SW POT 16 IMP 5%	$2.50	$1.50
AM 4105	SA 5 Mic Screw Adaptor	$2.50	$1.00	RP 4894	50mm Slider Pot 5K Lin	$1.95	$0.95
AV 6532	5P INDIN 5PDINREV VCAB	$4.95	$2.75	RQ 5270	50mm Slider Pot 2K Lin	$2.50	$1.50
AV 6551	Camera Cable 10M Belo14 Pin	$89.50	$40.00	SK 5810	4.9 MHZ Crystal	$6.50	$3.00
BS 0512	Exp IN And Interfac	$17.95	$9.00	RC 5708	1000/16V Elect Cap Axial	$1.50	$0.20
BS 0530	RF Circuit Design	$34.95	$19.50	SV 6382	4400/16V Elect Cap Axial	$1.85	$0.25
BS 0538	How To Read Elec Cats	$11.95	$5.95	TH 1081	Xenon 240 Clip	$1.95	$0.40
BS 0558	Digital Counter H/Book	$15.95	$7.50	TD 2026	Graphware Extra Arms (2)	$2.95	$1.50
BS 0562	Sound System Engin/RG	$33.95	$19.50	TD 2028	5 Drawer Flat Blade 150mm Metal	$0.40	$0.10
BS 0566	S 100 Other Micro Bus	$15.95	$6.75	TD 2030	5 Drawer Flat Blade 75mm H/D	$0.60	$0.20
BS 0572	TRS 80 Interfacing I	$15.95	$6.95	TD 2040	5 Drawer Flat Blade 125mmH/D	$0.75	$0.20
BS 0574	TRS 80 Interfacing II	$16.95	$7.75	TD 2042	5 Drawer 125x6 3mm S/D	$2.70	$0.80
BS 0576	PET Interfacing	$25.95	$11.50	TD 2044	5 Drawer 150x6 3mm S/D	$2.80	$0.80
BS 0586	The 6800 Primr Prog	$24.95	$11.00	TD 2070	5 Drawer 150x7 3mm S/D	$4.20	$1.20
BS 0588	16 BIT Microprocessors	$24.95	$12.00	TD 2074	5 Drawer PHL 100x6 3mm H/D	$3.50	$1.50
BS 0592	8085S Cookbook	$24.95	$12.00	XC 4865	5 Drawer Stak 48x6 3 S/D	$2.25	$0.80
BS 0600	Applic for your Apple	$17.95	$9.50	XB 0000	Multiprism Board XM2	$29.95	$16.50
BS 0602	UComp for Bus Applic	$15.95	$6.95	XB 0011	Book Wirebards Vol 1	$15.00	$5.00
BS 0640	Video Computers	$11.95	$6.50	XB 0012	Wirebards Vol 2	$16.00	$5.00
BS 0642	Visicalc Applications BK	$25.95	$13.50	XB 0013	Wirebards Vol 3	$12.50	$2.50
BS 0646	Video Fundamentals	$22.95	$9.75	YS 5100	Getting started on M/BE	$75.00	$49.00
BS 0648	Compl Home Vid Bk1	$22.95	$9.75	ZR 1462	Miniature Breath Tester Kit	$1.20	$0.40
BS 0649	Compl Home Vid Bk2	$22.95	$9.75	ZV 1540	400 Zener Diode 5W	$1.45	$0.40
BS 0656	Atari Games & Recreations	$23.95	$12.00	ZT 2043	12V 100MA TO 92	$1.20	$0.40
BS 0658	Games Atari Play	$23.95	$12.00	ZT 2072	AC 126 AC125 PNP Low Sign	$1.20	$0.40
BS 0660	Using Commod64 at Home	$17.50	$8.50	ZT 2104	5 10W Metal Case	$6.50	$0.20
BS 0662	Sprite Graph FR Comm64	$28.75	$12.00	ZT 2108	BC 204	$0.65	$0.08
BS 0664	Getting most fr Vic20	$15.95	$7.75	ZTZ21C	BF115 NPN SIG 40V 30MA TO72	$1.20	$0.20
BS 0668	Sci/Eng/G Prog for IBM PC	$19.95	$9.50	ZT 2270	BFR84	$1.95	$0.20
BS 0670	Soft Sain IBM PC DBase2 etc	$26.95	$11.50	ZT 2271	MPSA05 NPN SIG 60V 500MA TO92	$0.95	$0.10
BS 0672	Biz Prob Solv Wi IBM PC	$45.95	$16.50	ZL 3350	MPSA55 PNP SIG 60V 500MA TO92	$0.95	$0.10
BS 0674	How to write IBM Prog	$23.95	$11.50	ZL 3130	7611 SIG PA	$3.95	$1.00
BS 0680	How to Macrocomp Yr Sml Bus	$15.95	$7.75	ZL 3348	MAA1 Led Driver	$4.20	$1.50
BS 0682	Robotics Primer What How	$17.95	$7.50	ZL 3481	LM 348	$2.25	$0.40
BS 0684	Mgr's Guide Indust Robots	$15.95	$7.00	ZL 3750	LM 1AN	$4.95	$1.75
BS 0694	Genesis 2 Creation 9	$33.95	$16.00	ZL 3805	LM 386 Balanced Mod/Demod	$1.98	$0.50
BS 0700	Computer cookbook	$23.50	$8.50	ZC 4000	CA3000 RF AMP Module	$2.95	$0.20
BS 0704	UCSD Pascal Beginners Guide	$19.95	$9.50	ZC 4001	4000 Quad 2IP EXCL OR GTE	$0.80	$0.20
BS 0760	VIC20 50 Easy Games	$28.95	$8.75	ZC 4032	4001 8I Stage Shr Shft Reg*	$2.25	$0.40
BA 0904	$Computer Fr Everybody	$9.95	$4.00	ZC 4034	4002 Triple Serial Adder	$3.50	$0.50
BA 0908	Intro Word Processing	$23.95	$8.00	ZC 4035	4004 8BIT Tri-ST Uni BUSRG*	$2.98	$0.50
BS 0922	Advanced Robot Systems	$34.95	$13.00	ZC 4067	4005 4BIT Shift Register	$1.50	$0.20
BM 6500	Maplin 3800/5600 Constr Bk	$10.00	$2.50	ZC 4411	4007 Dual CIP 1P Analog Switch	$3.50	$0.50
BM 6502	How To Play 38/5600 Synth	$12.50	$3.50	ZC 4500	4411 8IT Rate Freq Counter	$17.75	$4.00
CM 2060	M/Range Cone SM130 5 1/2	$7.95	$1.50	ZC 4502	4500 Indust Control Unit	$7.95	$2.00
DC 3030	Jabber Grabber FM Ant Main	$19.50	$4.00	ZC 4508	4502 Strobed Hex Inverter	$1.95	$0.40
DC 3105	Adpt Double Male 02 782	$1.50	$0.30	ZC 4514	4508 Dual 4 BIT Latch	$5.00	$0.60
DC 3106	Adpt Double Female 02 783	$1.75	$0.30	ZC 4517	4514 4TO16LIN DCDR 4BIT Latch	$2.50	$0.40
DC 3230	Mic Holder Mag 7 201	$1.25	$0.40	ZC 4553	4517 Dual 64 BIT Stat Shftre*	$5.50	$0.60
DT 5418	Marine Antenna 9 Prefuned	$69.50	$20.00	ZC 4557	4553 3 Digit BCD Counter	$6.50	$0.80
HL 1602	Led Holder Cliplight Yell	$0.25	$0.05	ZC 4585	4557 1 64BT Var-Leg Shftre*	$8.50	$1.00
HM 3016	Gold Rods 500mm	$18.00	$2.00	ZC 4585	4580 4x4 Multiport Regstr*	$10.50	$2.00
HM 3042	Ezi Hook Large Red	$0.99	$0.30	ZS 5801	4581 4 BIT Alu	$4.50	$0.60
HM 3053	Alligator Clip Red	$0.40	$0.10	ZS 5805	4611 Quad 2I/P NAND D/Out	$0.80	$0.20
HM 3180	812 Gas Sensor Figaro	$14.95	$5.00	ZS 5813	4555 Hex Inverter Open/C	$0.55	$0.20
HE 8640	16 Way 15 Edge Connector	$4.95	$1.50	ZS 5814	4712 Triple 3I/P and Gate	$0.60	$0.20
HE 8656	85 Way 156 Edge Conn S/Lug	$5.95	$1.50	ZS 5817	4713 Dual And Schmt Trig	$0.95	$0.20
HE 8657	86 Way 156 Edge Conn PC Type	$5.95	$1.50	ZS 5842	4714 Hex Schmitt Trigger	$0.90	$0.20
KA 1118	Kit Video Enhancer	$39.50	$15.00	ZS 5843	4717 Hex Buffer/Driver	$0.95	$0.20
KA 1492	PH Meter LCD	79.00	$35.00	ZS 5841	4720 Dual 4I/P NAND Gate	$1.20	$0.20
KA 1507	OPTO Option Trans Ass Ign	$19.50	$5.00	ZS 5847	4730 8I/P NANAD Gate	$1.20	$0.20
KE 4003	Kit ET068 Led Dice	$8.90	$3.00	ZS 5848	7441	$1.90	$0.30
KE 4032	Kit House Alarm ET1582	$44.95	$20.00	ZS 5853	7447 BCD 7 Seg Decod/DRVR	$1.60	
KE 4206	ETI 478 MC Mov Coil P/Amp	$29.50	$12.50	ZS 5870	7448 BCD 7 Seg Decod/Driver	$1.95	$0.30
KE 4654	ETI733 RTTY Convertor 04/83	$24.95	$11.50	ZS 5874	7453 EXP 4Wide 2I/P AN/OR	$1.20	$0.20
KE 4671	Parallel Interface Kit M/BE	$15.95	$7.00	ZS 5876	7470	$1.00	$0.20
KE 4672	ETI672 TTY Interface 10/83	$15.95	$6.00	ZS 5883	7474 Dual D Flip Flop	$1.15	$0.20
KE 4683	Masterplay amplifier	$69.95	$35.00	ZS 5885	7476 Dual JK M/S Flip Flop	$0.80	$0.20
KE 4693	OP Amp Tester ETI 183	$29.95	$14.50	ZS 5886	7483	$1.45	$0.30
KE 4695	Modem Kit ETI 699	$139.00	$69.50	ZS 5890	7485 4 BIT Comparator	$1.60	$0.30
KE 4703	Electronic Jumper Leads	$39.95	$20.00	ZS 5891	7486 Quad Exclusive or GT	$0.90	$0.20
KS 1887	HE117 House & Car Alarm	$19.95	$8.50	ZS 5892	7490 Decade counter	$1.20	$0.20
KS-8123	HE123 Alien Invaders	$15.50	$7.00	ZS 5898	7491 8 BIT S/R Register	$1.60	$0.30
KS 8128	HE128 Foghorn	$8.50	$3.50	ZS 5906	7492 Divide by 12 Counter	$1.20	$0.20
LT 3255	STD Off Nail in Ribn	$0.20	$0.04	ZS 5907	74198 8 BIT R/L Shift Regs	$3.90	$0.50
LA 5030	Composite Contr Alarm Modul	$47.90	$22.50	ZS 5908	74191 Sync UP/Down BIN CT	$1.75	$0.30
LA S105	Strobe Flasher 12V	$32.50	$16.50	ZZ 8072	74192 Up/Down Decade Cntr	$1.75	$0.30
LA 5180	Alarm Micro 4 control	$209.00	$50.00	ZZ 8162	74193 Up Down Binary Cntr	$1.95	$0.30
LA 5305	Car Alarm MDL AA812	$45.00	$20.00	ZK 8881	CDP1822	$11.50	$1.50
PS 2202	VS 8 SV Video Conn Skt 8 Pin	$7.95	$2.75		DM2502	$11.95	$1.50
					TA7205P Audio Amp	$4.50	$1.00

World Radio History

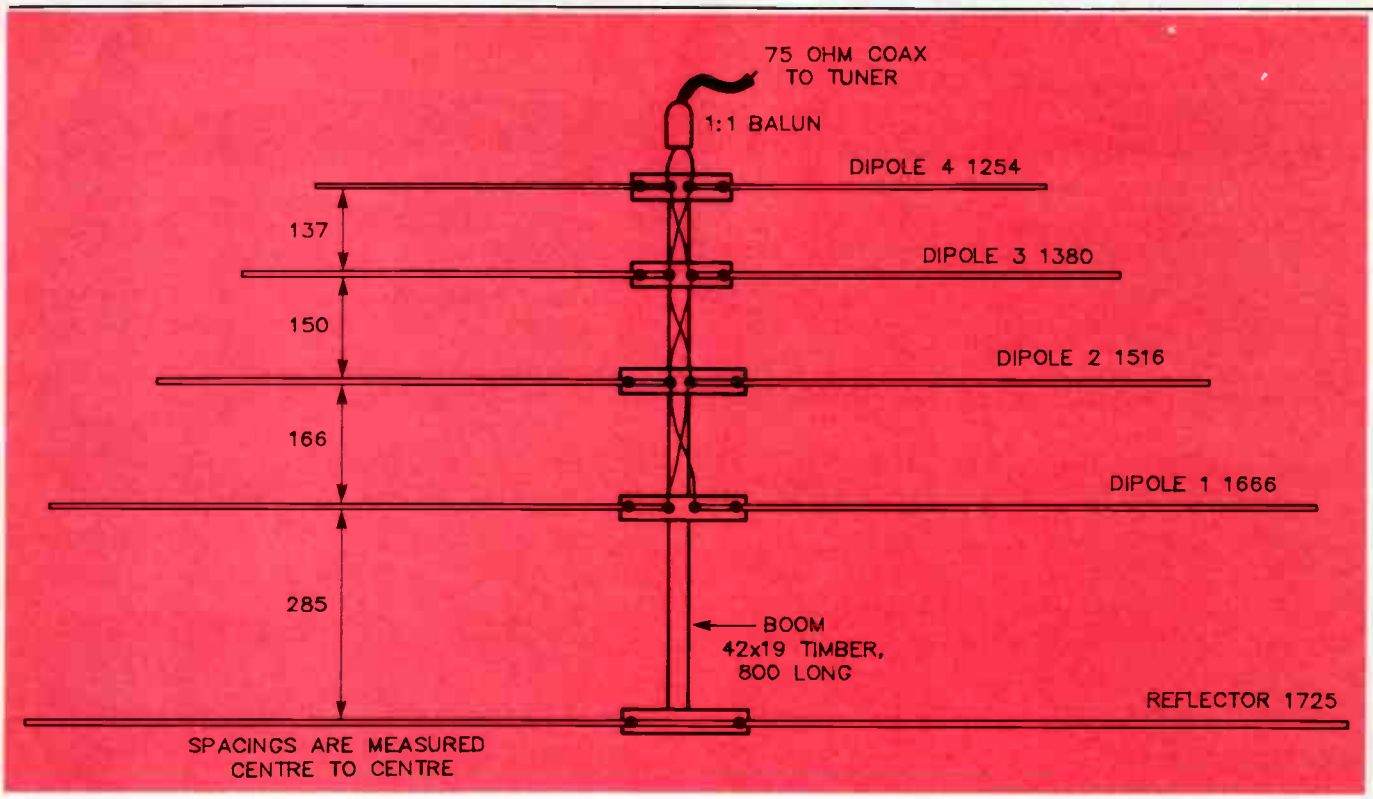

Figure 2. Showing the general construction and dimensions of the project. The boom and brackets are timber and should be weather sealed with a stain or epoxy lacquer.

boom length. I went for a good match to 75 ohms, rather than optimising the gain. The feedpoint impedance is around 68 ohms, yielding a VSWR of 1.1:1 across the band, while the design gain is around 6.4 dB over a dipole. With the parasitic reflector, the front-to-back ratio should be in the vicinity of 20 dB.

As the feedpoint is balanced, a balanced-to-unbalanced transformer, or *balun*, will need to be installed so that commonly available 75 ohm coaxial cable (as used for TV antenna installation), which is an unbalanced feedline, may be used to connect the antenna to your FM tuner/receiver.

Construction

Each of the dipoles is split in the centre to permit attachment of the antenna feed. Thus, each must be insulated from any supporting structure. Accordingly, I chose to use a wooden boom and wooden element-to-boom support brackets. I used common rectangular section 42 x 19 mm dressed timber. Pine is the cheapest, but does not weather well. Western red cedar or any of the close-grained hardwoods suited to outside use, free of any warping and knots, will do the job nicely. An 800 mm length is required for the boom itself, and a total of one metre for the element-to-boom brackets. Overall construction is shown in the diagram of Figure 2.

The antenna elements are made of 10 mm (about ⅜") diameter aluminium tubing. The reflector is a single length of tubing 1725 mm long. The four dipole elements each have a 10 mm gap in the centre (see Figure 3). The dipole element lengths given in Figure 2 are tip-to-tip measurements. Accordingly, *each half dipole is cut 5 mm short*. You can make the dipole elements either by cutting them as a single length, 10 mm shorter than the tip-to-tip measurement, and then cutting each length in half, or by cutting them as half-elements, each 5 mm shorter than half the tip-to-tip measurement. Many aluminium suppliers will cut tubing to length for you — saves you the energy! Table 1 gives the cutting dimensions for either approach.

TABLE 1: Dipole element cutting dimensions

Dipole #	Full length, to be cut in half	Half length, allowing for centre gap
1	1656 mm	828 mm (two off)
2	1506 mm	753 mm (two off)
3	1370 mm	685 mm (two off)
4	1244 mm	622 mm (two off)

After cutting all the dipole elements to size, each has two holes drilled in the one end so that they may be screwed to the element-to-boom brackets. One hole is only 4 mm in from the end, the other is 90 mm in. They are drilled to the clearance diameter of the screws to be used. The reflector only requires two holes to be drilled, each 90 mm either side of the centre line. Now put them all aside, stacked according to size, or mark them with a felt-tipped pen so that you can recognise them later.

Now cut the element-to-boom brackets. These are each 200 mm long and five are required. Take each of them and mark out and drill clearance holes for the two screws which secure the bracket to the boom. See Figure 3. Also mark out and drill pilot holes for the four element mounting screws in each. Use a drill the root diameter of the screws. This avoids any splits occuring in the timber when the screws are driven home. Note that the reflector bracket only requires two element mounting screws.

Next, pencil in a centre line on the top surface of the boom, then mark out and drill pilot holes for each pair of element bracket securing screws according to the element spacings

World Radio History

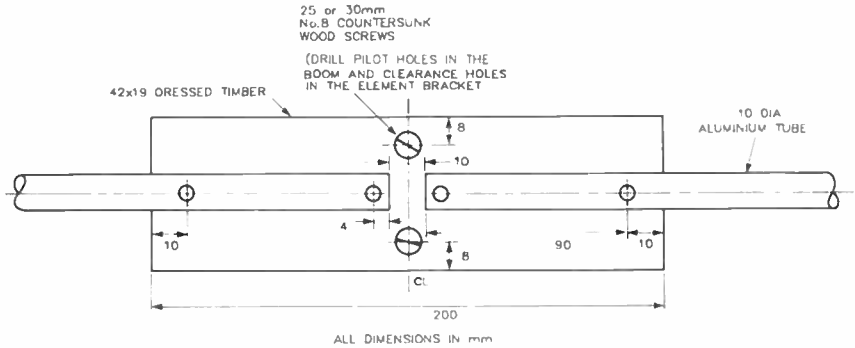

Figure 3. The element-to-boom support bracket assembly.

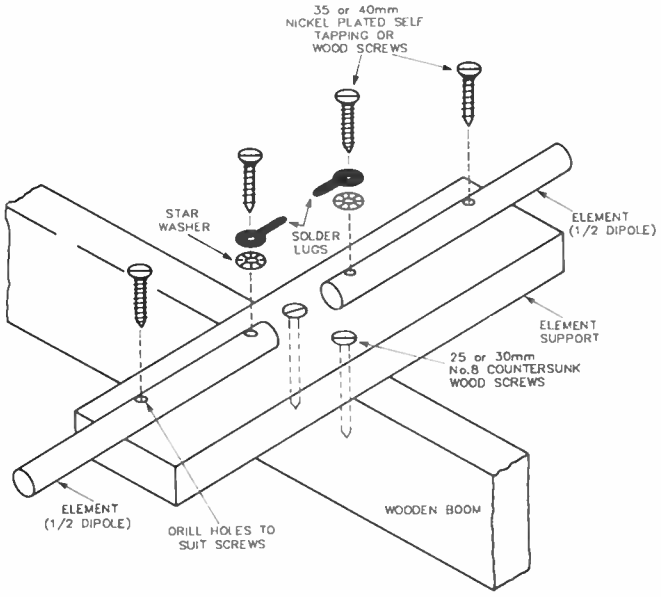

Figure 4. Showing the element mounting details. Note that the reflector is not split in the middle and only two screws are required to mount it to the element support.

given in Figure 2. As before, use a drill the root diameter of the screws to be used.

The elements can now be screwed to their brackets using 20-25 mm long nickel-plated wood screws or self-tappers (PK screws). Solder lugs with star washers are placed under the screws holding the centre ends of each dipole half-element, as shown in Figure 4. Each element assembly can then be screwed to the boom as detailed also in Figure 4. Make sure you align each element assembly at right angles to the boom.

The dipole feeder (antenna feed) interconnections should now be installed. The details are given in Figure 5. Use medium duty insulated hookup wire (10 x 0.2 mm). Carefully solder each joint.

That completes the antenna construction. To match the feedpoint to coaxial cable, a balun needs to be purchased or made up. As 1:1 75 ohm baluns are pretty scarce, details on constructing your own are given in the accompanying panel.

The balun is mounted on the end of the boom, adjacent to or beneath dipole 4. Run short connecting leads from the balun input to the feedpoint connections.

The element mounting screws and antenna feed terminations should be sprayed with some weather sealant prior to installing the antenna. ▶

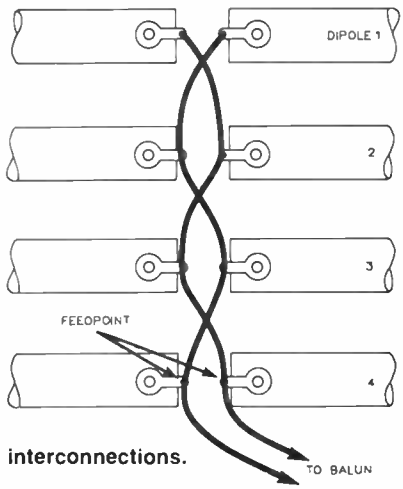

Figure 5. Dipole feeder interconnections.

CONSTRUCTING A 1:1 BALUN

A 75 ohm-to-75 ohm balanced-to-unbalanced transmission line transformer, which may be employed at frequencies up to about 200 MHz, is readily constructed on a commonly available 'two-hole' ferrite 'balun core', Neosid type 1050/2/F14. Dick Smith Electronics stocks them cat. no. L-1352, as well as Jaycar, cat. no. LF-1222. The core measures 13 mm wide by 7.4 mm high and is 13.4 mm long. Alternatively, such cores are found in 4:1 TV baluns, so you could strip one from an old or unwanted TV balun and use that here.

Construction is relatively non-critical; the details are given in the accompanying diagrams. The transformer comprises three *tri-filar* windings (that is, three wound together). Use any convenient light gauge hookup wire, preferably in three different colours to aid identification of the individual windings when making the connections. Each of the three wires should be about 150 mm long. Lightly twist them together before winding them on the core. Wind 6½ turns around the *outside* of the core, as shown.

Glue the wound core to a small square of matrix board about 25 mm square. 'Five minute' epoxy is ideal for this. The windings are then soldered to pairs of pins ('pc stakes') placed at either end of the core, with the connection sequence as shown.

Take a short length of coaxial cable and attach a Belling-Lee (or 'PAL' TV connector) coaxial line socket on one end. The other end is then terminated to the 'unbalanced' output of the balun. A pair of hookup wires of the required length (keep it short) link the balanced input to the antenna feedpoint. The balun assembly may then be conveniently 'potted' in epoxy to weatherproof it. Alternatively, it may be mounted in a small plastic case, sealed to prevent the ingress of moisture.

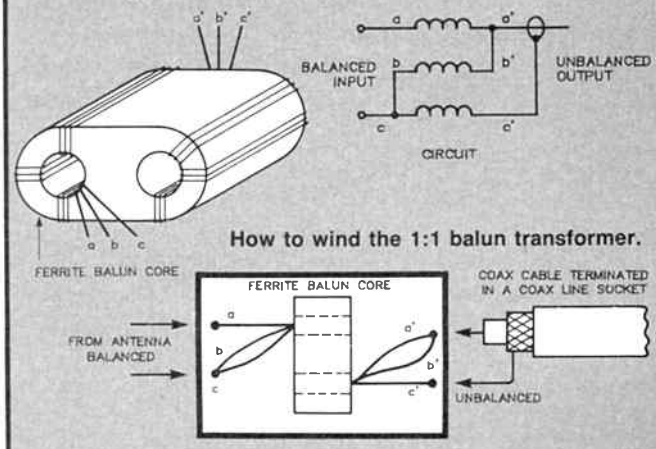

How to wind the 1:1 balun transformer.

General construction of the 1:1 balun. The wound core is glued to a 25 x 25 mm square of matrix board and pc stakes or pins used to terminate the balun connections.

World Radio History

Installation

The antenna should be installed in much the same way you'd install a TV antenna. It could be mounted on the same mast as your existing TV antenna, providing you can accommodate it at least one metre above or below it to avoid them electrically interfering with one another. Otherwise, mount it by itself such that the path immediately in front of the antenna, in line to the transmitters, is not obstructed by any large trees or other buildings.

The boom may be secured to a mast by means of a 'U-bolt', as is commonly used for TV antenna mounting. Find the balance point of the antenna by holding the boom lightly at different points until you find that point where it naturally balances. Now mark out and drill the two holes required through the boom. When clamping the boom to the mast, do not overtighten the nuts on the U-bolt or you risk splitting the boom.

The antenna has quite broad directivity, so it should not be critical to line up. This was a deliberate choice when designing the antenna as the station transmitting locations are quite scattered. If you live a fair distance away from the general area where they're located, the antenna's directivity should encompass most, if not all the stations (or, at least the ones you prefer to listen to). In some situations, you may need to use an antenna rotator if one or more stations are at widely separated directions from your location. A light or medium duty TV antenna rotator is ideal.

The coaxial feedline from your antenna to the tuner should be a good quality, low-loss type such as is used for TV antenna feeder. The length of cable required should be kept as short as practicable to keep the loss in the cable to a minimum, otherwise performance will be affected. For cable runs up to about 15 m, cable suited for VHF TV use is adequate. For runs over that length, use low-loss UHF TV coax. You'll pay more, but the results are worth it.

Take care when installing connectors to the coax, to see that the connections are properly made and no internal short circuiting occurs with stray wire strands.

Good listening!

Siting the antenna to clear its 'view' toward the TV stations.

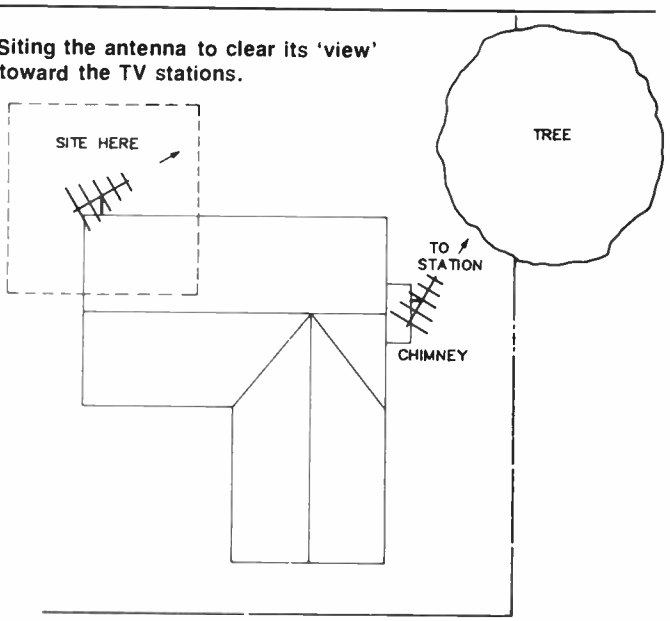

ADMARKET

Readers' free adverts.
READERS-CLUBS-ASSOCIATIONS

WE'LL PUBLISH your advertisement of up to 32 words (maximum), totally free of charge. Either fill out the coupon here, or write or type it out on a clean sheet of paper. But **please** make it legible, other wise it may not turn out as you intended! Copy **must** be with us **six weeks** prior to the month of issue. Every effort will be made to publish you advertisement, but no responsibility for so doing is accepted or implied.

CONDITIONS You must include your name and 'phone number and/or address within the 32 words (for amateurs, 'QTHR' is acceptable). Accepted abbreviations such as DSDD, 100 W RMS, ONO etc, may be used. Please include you name and full address plus 'phone number with a covering letter. **Private advertisements only** will be accepted. We have 'small ads' for traders, who should contact our advertising representatives.

Send your adverts to: **AEM ADMARKET**
Australian Electronics Monthly
PO Box 289 WAHROONGA 2076 NSW

World Radio History

	**** MENU ****	
	RECEIVE	TRANSMIT
A	1200	BRC 75
B	1200	75
C	BRC 75	1200
D	75	1200
E	300	ORIGINATE
F	300	ANSWER
	CURRENT STATUS	
A	1200	BRC 75

A software-driven *super* modem project

Part 2

Chris and Dan Darling – design
Roy Hill – articles

Well, here it *really* comes – the auto-almost-everything modem you've been waiting for, introduced in Part 1 last month. In this article, we tackle the construction and assembly of the project. Part 3, to follow, will cover testing and troubleshooting information, plus details on using it.

THIS MODEM was designed as a 'stand alone' unit so that it could be hooked-up to *any* computer having an RS232 serial port and running suitable communications software (e.g: a 'terminal emulator' program). It could, in fact, be used with a data terminal alone, if you so desired.

The construction of this project should be within the capabilities of any person with average soldering ability and some previous constructional experience.

Despite the large number of ICs employed, the pc board has been spaciously laid out in the main, making assembly a fairly straightforward task. The printed circuit board is double-sided with plated-through holes and was designed with a computer-aided draughting (CAD) package which permits the use of quite small pad sizes and narrow track widths to achieve the required component density and number of required interconnect lines. As you would appreciate, it is not a viable proposition, if not impossible, to etch and through-plate such a board at home with the usual facilities available to hobbyists (i.e: the laundry sink!). Hence, artwork is not provided. Copyright on the board and the EPROM-resident software has been retained by the designers. However, for those constructors able or willing to source their own components, the pc board and EPROM (containing the Maestro software) will be available through AEM's usual pc board service. See the service's advertisement elsewhere in this issue. Complete kits are available through a special offer printed following the end of this article.

Constructors of this project are reminded that, although all of the relevant components specified for assembling the project meet or exceed Telecom requirements with respect to direct-connect modems, it is your responsibility to seek individual Telecom approval following completion, before you attempt connecting it to the public switched telephone network. See the accompanying panel for details on your responsibilities and seeking approval.

Before you start

Before you attempt the construction of the kit, there are several preparatory steps that you should take. Firstly, ensure that you have a good quality soldering iron. An iron with earthed, interchangeable tips is ideal. Temperature control is also advisable. Suitable units are distributed, for example, by Royel Electronics in N.S.W. and Victoria, as well as the Weller irons from The Cooper Tool Group in Albury, NS.W. ▶

World Radio History

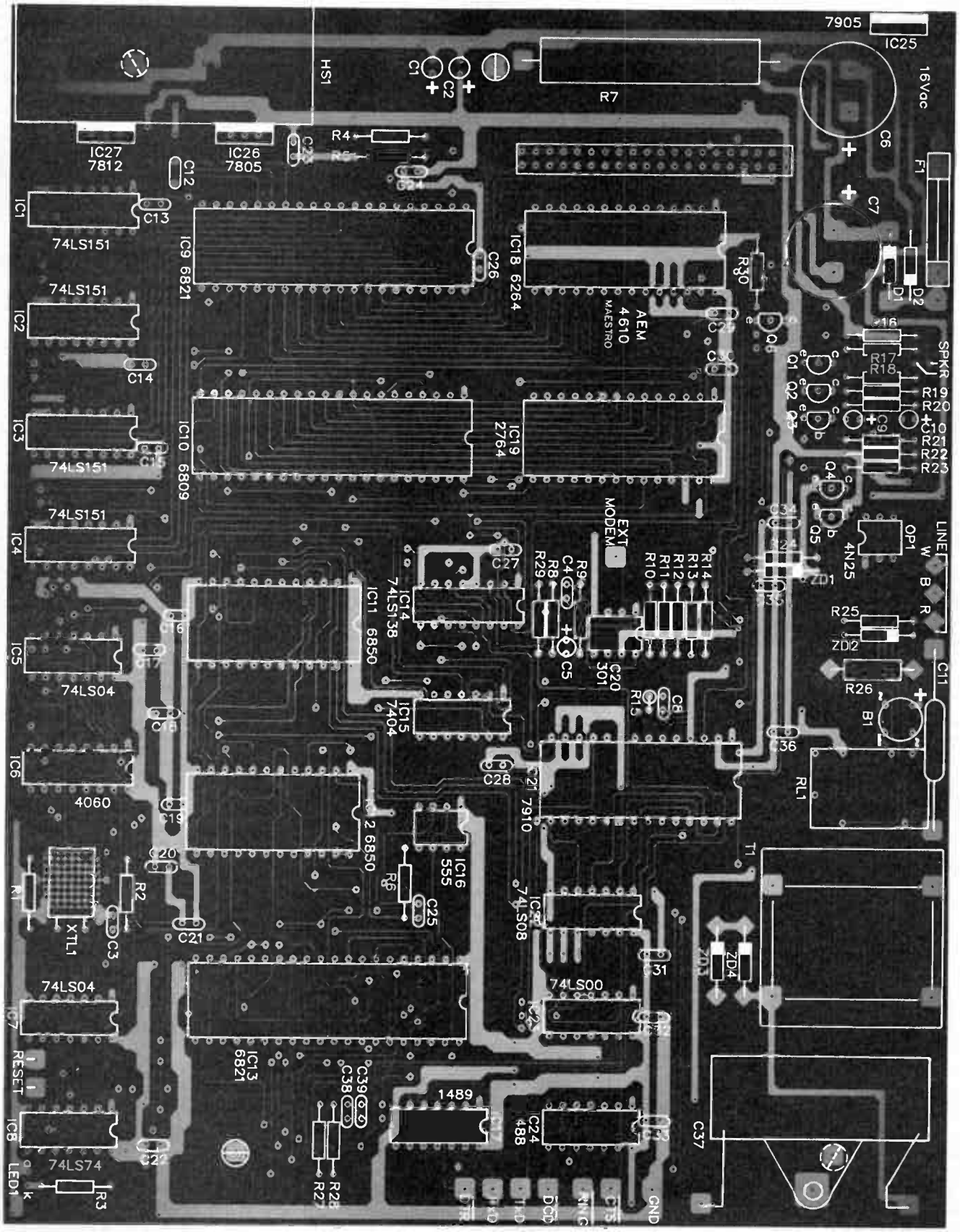

World Radio History

Secondly, use a grade and diameter of solder that is appropriate to the kit being constructed. Plumbers' soldering sticks are ideal for 25 mm copper pipe, but not very suitable for the fine detail of a circuit board. A recommended grade and diameter is 60/40 x 0.71 mm ('22 gauge') resin-cored solder. This is available at most electronics shops.

Other tools suggested are: A pair of transistor nippers with cut-off retainer (e.g: those from Scope), used to prevent bits and pieces flying all over the house; a pair of fine-tipped pliers (useful for holding components whilst soldering and acting as a heat sink for delicate components); a pair of tweezers (for picking up components); a small magnifying glass or jewellers' loupe (eyeglass); two small tins — one to hold the components being used and one to hold the offcuts from the passive components (resistors, capacitors etc.) I usually keep these in a small container to use as jumpers, links etc; two IC inserters — one for 8 to 16 pin ICs and the other for 24 to 28 pin ICs; a multimeter with a suitable sensitivity (greater than 20 000 ohms/volt) is recommended, this will be used for later trouble-shooting; some contact or silicone adhesive for attaching the speaker.

The final requirement (absolutely vital) is a suitable work area, away from junior or Fido, where one can leave a partially completed project without the risk of it becoming part of a canine diet, or the middle layer of a peanut butter sandwich. A fluorescent desk lamp is also a good investment.

If the following instructions seem akin to "painting by numbers", we make no apologies for it's been worked out to minimise any hassles so that you can assemble your project with confidence of a successful result.

Let's go!

The first step in the construction is to check the printed circuit board for any defects (use the magnifying glass or jewellers' loupe). The boards will likely have all been thoroughly inspected prior to shipment. However, it is not unknown for accidents to happen. Have the board replaced if there's any sign of damaged tracks. Make sure that you have all components on hand. Do not remove any CMOS ICs from their protective packaging at this stage.

Now, let's orient the board in a manner suitable for description. Place the board on the work area with the cross-hatched area (where the crystal will go eventually) on the edge closest to you. This is the FRONT of the board (see the component overlay). Make sure that the component side is facing up. Just as a check, the place where the expansion connector (two rows of twenty holes) will be inserted should be on the left-hand side.

STEP 1: Insert all of the IC sockets in their appropriate locations, as per the overlay diagram. Ensure that all the notches in the sockets (these are used to locate pin 1 of each of the IC's) are facing away from you, except for the opto-isolator, OP1, which faces the opposite way. This arrangement helps prevent any mix-ups when it comes time to insert the ICs.

Place a flat piece of cardboard over the sockets and turn the board upside down. Solder each in turn, making sure that the soldering iron is sufficiently hot to produce a good flow of solder down the through-plated holes. Use the magnifying glass to check that all of the legs are adequately soldered. Remove the cardboard and turn the board up the right way.

Component overlay, showing placement and orientation of the parts. Only the topside tracks have been shown, for the sake of clarity. Note that R15 is mounted vertically. The 10 watt resistor, R7 should be mounted such that it clears the board to allow free air flow around it. A ceramic bead at the end of each lead, immediately above the pads, will ensure proper spacing and mechanical rigidity.

Under no circumstances should you attempt to insert any of the ICs at this stage.

STEP 2: Locate and insert all of the small 100n bypass capacitors C12-24, C26-36 (small rectangular blue or yellow packs), in the correct locations. These are installed between the supply rails and ground. Ensure that they fit as close to the board as possible (bend the legs over beneath the board to hold them in place). These capacitors are extremely important as they help prevent supply 'glitches' and strange characters interfering with an important transmission. Note that C25 in the reset circuit, is the same type. Solder each of these into position and trim off excess lead length with the nippers.

STEP 3: Locate and insert all the resistors. Once again, bend over the leads to keep them in place while waiting to be soldered. One of the aspects that distinguishes a well-built project from a mediocre one, is the manner in which resistors are inserted.

Ensure that they all sit neatly in place, and that they are 'dressed'. That is, make sure that the gold or silver tolerance ▶

AEM4610 PARTS LIST

Semiconductors

B1 . . . W02, 1.5 A 'mini bridge'
D1. . . 1N5404, or MR715 diode
D2. . . . . 1N4002 or similar
IC1-IC4. . . . 74LS151 multiplex.
IC5 . . . . . 74LS04 inv.
IC6 . . . . . 4060 div.
IC7 . . . . . 74LS04 inv.
IC8 . . . . . 74LS74 flip-flop
IC9 . . . . . 6821 PIA
IC10 . . . . . 6809 micro.
IC11, IC12 . . . . . 6850 ACIA
IC13 . . . . . 6821 PIA
IC14 . . . . 74LS138 3-8 decoder
IC15 . . . . . 7404 inv.
IC16 . . . . . 555 timer
IC17 . . . . . 1489 line Rx
IC18 . . . . . 6264 8K x 8 RAM
IC19 . . . . . 2764/27128 EPROM
IC20 . . . . . 301 op-amp.
IC21 . . . . . 7910 (7911) modem
IC22 . . . . . 74LS08 AND gate
IC23 . . . . . 74LS00 NAND gate
IC24 . . . . . 1488 line driver
IC25 . . . . . 7905 -5 V reg.
IC26 . . . . . 7805 +5 V reg.
IC27 . . . . . 7812 +12 V reg.
LED1 . . . . . 5 mm red LED
OP1 . . . . . 4N25 opto-isolat.*
Q1-Q5 . . . . . BC547 or sim.
ZD1 . . . . . 1N4742 12 V zener
ZD2 . . . . . BZXC9V1 9 V zener
ZD3, ZD4 . . 1N4728 3 V zener

Resistors all ¼ W, 5% unless noted

R1, R2 . . . . . 470R
R3 . . . . . 220R
R4, R5 . . . . . 4k7
R6, ... 1M
R7, ... 12R, 10W
R8, R9 . . . . . 100R
R10, R11 . . . . . 22k
R12-R14 . . . . . 1k
R15 . . . . . 100R
R16 . . . . . 100k
R17 . . . . . 2k2
R18, R19 . . . . . 100R
R20 . . . . . 10k
R21 . . . . . 1k
R22, R23 . . . . . 1k
R24 . . . . . 100k
R25 . . . . . 100R
R26. . . . 100R 1 W metal film*

Capacitors

C1, C2 . . . . . 10u/25 V electro.
C3 . . . . . 22p ceramic
C4 . . . . . 33p ceramic
C5 . . . . . 2u2/16 V tant.
C6, C7. . . . 2200u/25 V electro.
C8 . . . . . 2n2 ceramic
C9, C10 . . . . . 2u2/16 V tant.
C11 . . . . . 1u5/240 Vac poly.*
C12-C-36 . . . 100n cer. bypass
C37 . . . . . 2u/440 V iso. cap.*
C40 . . . . . 10u/25 V electro.

Miscellaneous

F1 . . . . . M205 1.5 A fuse
RLI . . . . . 12 V SPDT isolation relay.*
SPKR . . . . . 8 ohm 75 mm dia. speaker.
T1 . . . . . 600:600 ohm line isolation transformer, Ferguson MT620 or equiv.*
XTL1 . . . . . 4.9152 MHz crystal in HC18/U can.
HS1 . . . . heatsink, DSE H3401 or similar.

AEM4610 (Maestro) pc board, double-sided and through-hole plated; large plastic instrument case 260 x 190 x 80 mm; 25-pin D plug; hookup wire; insulated mounting spacers; nuts and bolts, etc.

* Telecom-approved components.

Project price: $395

(**$295** on Special Offer — see details following article).

OPTIONAL: 16 V/1.5 A plugpack power supply; male & female quick connects (for speaker); reset switch — normally open, momentary contact type; components to provide battery backup (see follow-up article)

World Radio History

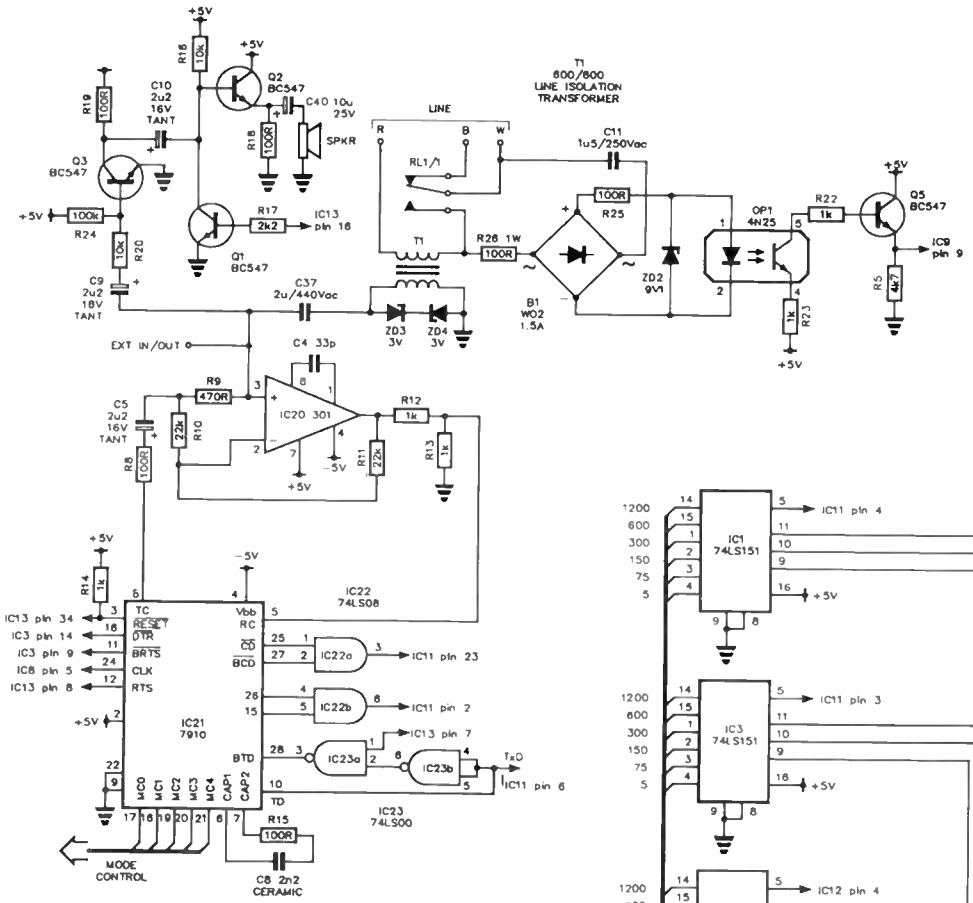

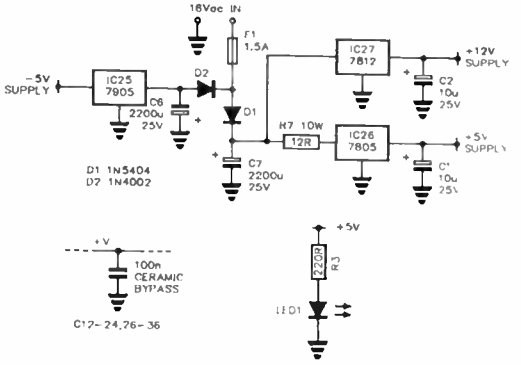

Circuit of the Supermodem. A detailed description of the circuit operation will be given in Part 3. An overview was described in Part 1. Truncated data sheets for some of the major devices employed are published elsewhere in this issue.

NOTE: Some components shown on the board overlay, but not on the circuit or mentioned in the parts list, are related to options which may be added later. These are: C38 and 39, R27 and 28, which are for the tone-dial option, plus Q6 and R30, which are for the battery-backed option. As per the text, C40 mounts on the speaker.

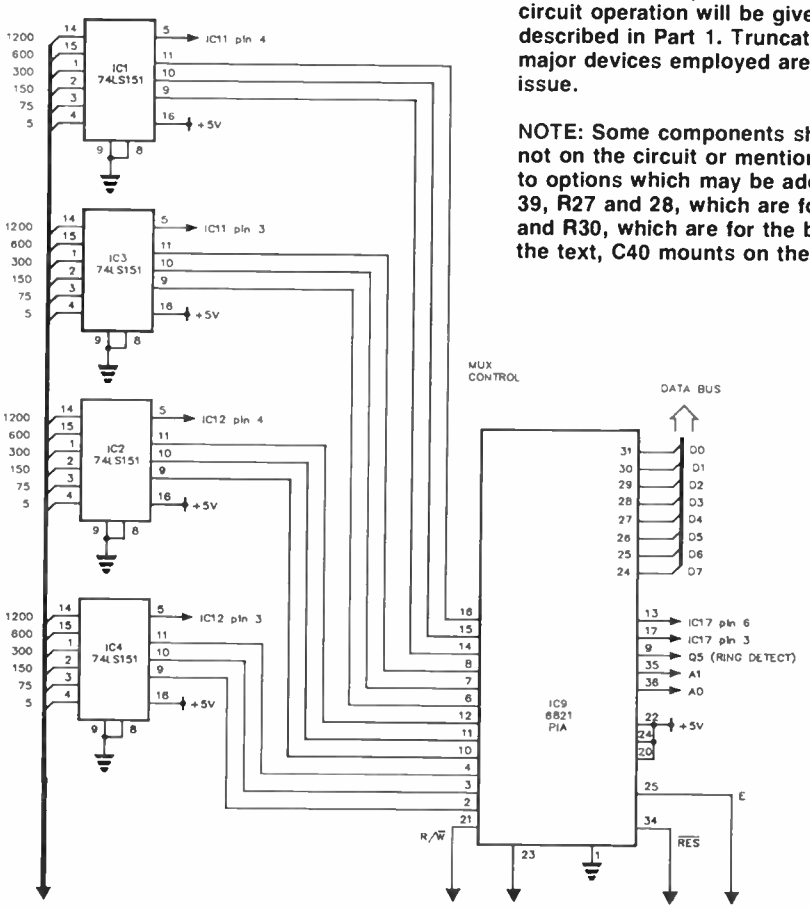

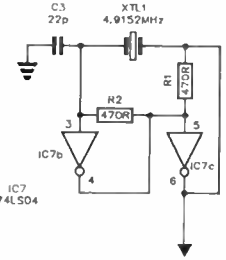

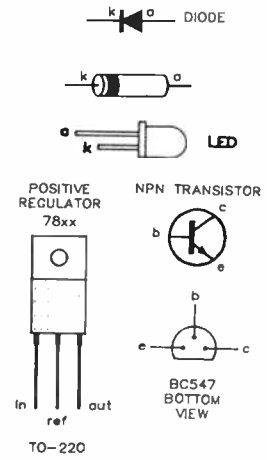

World Radio History

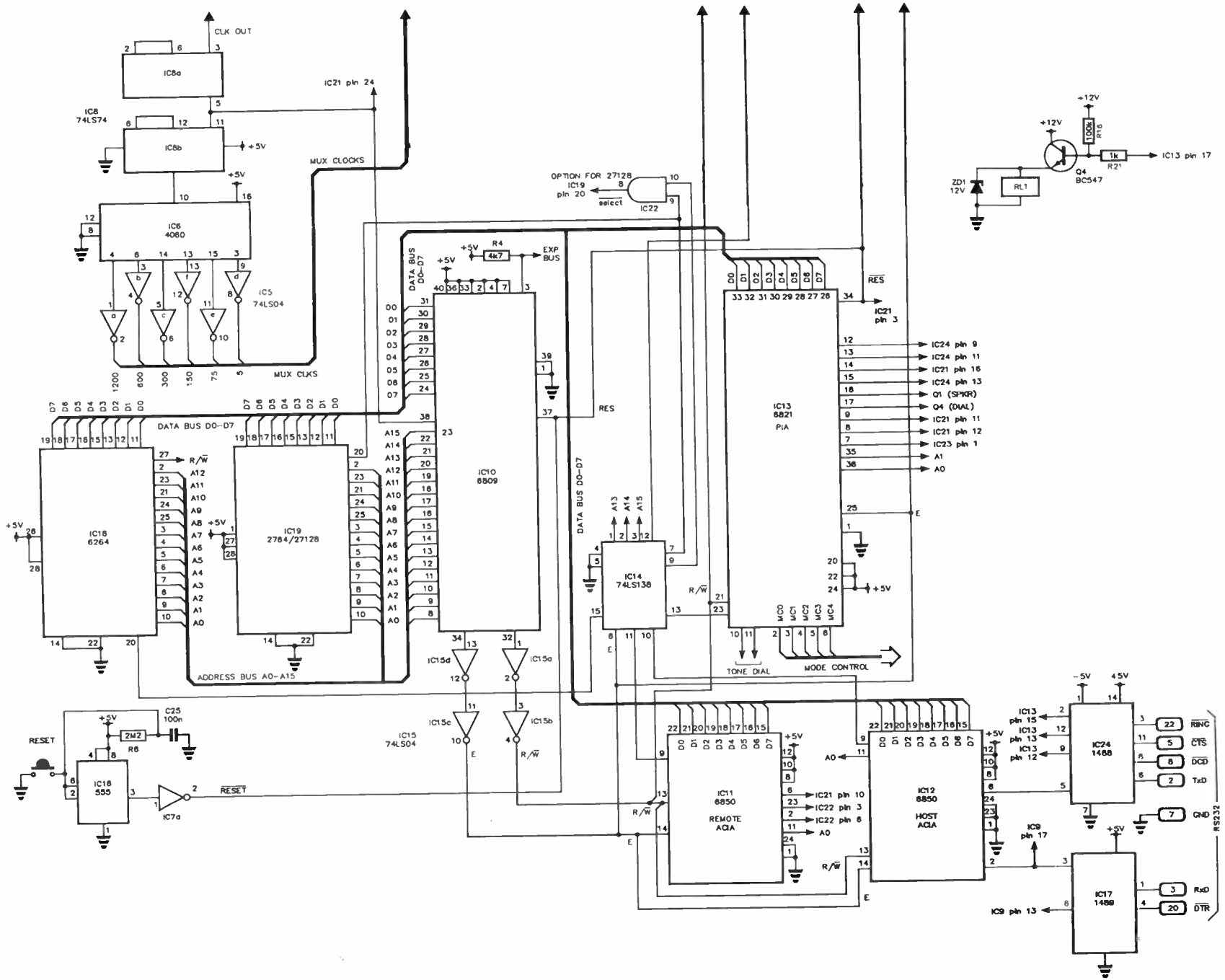

World Radio History

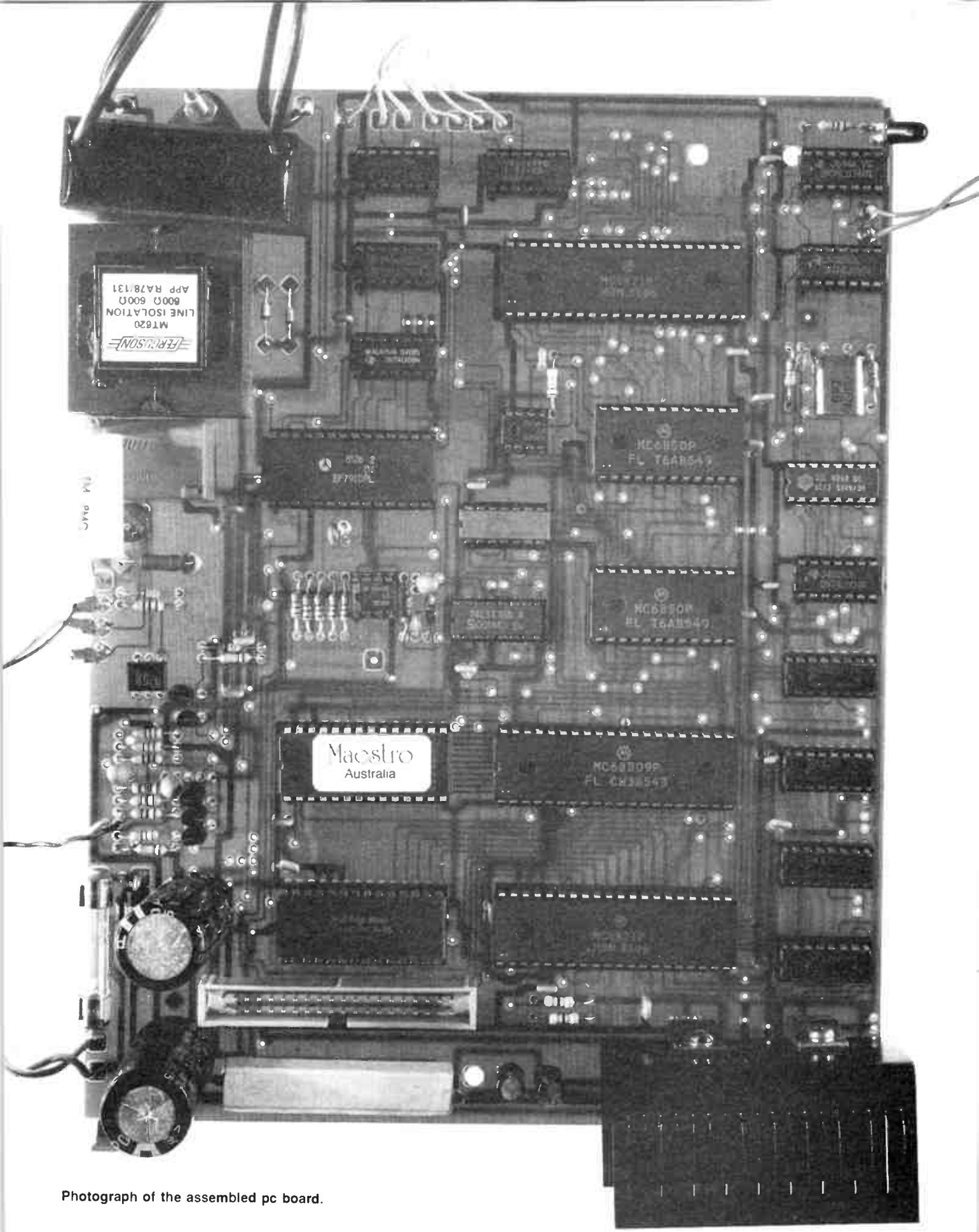

Photograph of the assembled pc board.

World Radio History

rings all face in the same direction. The resistors won't mind (they have no sense of direction) and it makes the project look professional.

Note that R15 must be mounted vertically. Just bend one of the leads through 180° and insert both leads through the holes. Keep these leads as short as possible. Trim off the excess with nippers.

Note also that R7, the 10W resistor, must be mounted a few millimetres clear of the board to allow free air flow around it.

STEP 4: Locate and install the three ceramic capacitors. The 2n2 capacitor (it will likely be marked 222) is part of the modem chip circuit, the 22 pF capacitor (most likely marked 22p) goes beside the crystal and the 33 pF capacitor (similarly, marked 33p) is located to the left of the LM301 op-amp, IC20. Once again, bend the leads over to hold them in place, solder and trim off the excess leads.

Install and solder the five BC547 (or similar) NPN transistors. The collectors are all towards the *far* edge of the board, the bases are in the centre and the emitters are towards the *front* (crystal end) of the board. Note that the pads for the emitters all have a little blob on them to mark the location. The leads should also be as short as conveniently possible.

STEP 5: Locate and install the three zener diodes. Note that these diodes are not installed in the same manner as rectifier diodes. In this project, the two 3.1 volt zener diodes have their negative (banded) ends facing towards the *left* of the board and the 9.1 volt zener has its band facing the *rear* (transformer) end of the board. It is advisable to insert the zener diodes with the printed part number facing upwards, so that future identification (for replacement purposes) is far easier.

At this stage it is also a good idea to install the 4N25 optoisolator (a 6-pin IC). Note the polarity of this device. Pin 1 faces the *front* of the board. There is no need for a socket for this device as they are almost indestructible (juniors and Fidos excepted). They are designed to withstand 7 kV, which is more juice than a household generator provides.

Install and solder the rectifier diodes, D1 and D2, taking care to insert them with the correct polarity (see the overlay diagram). Note that D1 is a rather hefty fellow (a light-heavyweight). The cathode (banded end) of this diode faces the left-hand side of the board (also called the red-corner — if you accidentally reverse the polarity or position of these two diodes, then you will most certainly have a fight on your hands).

STEP 6: Install and solder (in the order mentioned) the expansion connector (a 2 x 20-pin male socket), the three 2μ2 tantalum capacitors (two at the rear of the boards, near the fuse and one just in front of the op-amp), the two 2200μ electrolytic capacitors and the two 10μ electrolytic capacitors (one on each of the regulator ICs, between the Vcc and Vss i.e: the supply voltage and ground).

Ensure that these are installed with the correct polarity — the negative end of electrolytic capacitors is usually marked with a rwo of 'minus' signs and tantalum capacitors usually have a '+' sign immediately above the positive terminal. If you solder them the wrong way round, then, when you eventually apply the power, your modem will communicate with you in ways you never dreamed possible!

Install and solder the 12 V relay. This should be inserted with the notch on the case at the end closest to the *front* of the board (the notch should be on the left-hand side).

Now install and solder the 600:600 ohm line isolation transformer, the 2μ/440 V and the 2μ/240 V isolation capacitors. Neither of these devices is polarity dependent. However, the isolation transformer should be mounted so that the writing either faces left or right. Solder the leads of the 2μ/440V capacitor to the *top* of the pads (refer to the overlay diagram) and bolt it to the board.

Locate, install and solder the bridge rectifier. This device is polarity dependent and has a '+' sign on the top of the case to indicate its polarity. The bridge should be inserted with the '+' sign at the *rear* left of the board. Now install the 1μ5/250 V isolation capacitor over *the top* of the bridge rectifier and the relay. The length of the leads on this capacitor is not important.

STEP 7: Install and solder the fuse-holders. These are located at the rear left-hand side of the board. Insert the crystal leads in the holes provided for it and bend the crystal over until it lies flat against the board. Solder the leads in place and run a wire over the crystal can, soldering down each end, to secure it in place.

Install and solder the three-terminal regulators, ICs 25, 26 and 27. IC25 is installed in the top lefthand corner with its metal side facing away (left) from the board. The 7805 (IC26) and 7812 (IC27) are first bolted loosely to the heatsink (no insulators are needed), then soldered in place such that the heatsink stands about 5 mm proud of the pc board. Tighten the bolts afterwards. Refer to the picture and overlay diagram.

Mount the LED in the holes provided, ensuring that the polarity of the device matches the overlay diagram. Most LEDs have a flat spot on the red plastic lens, immediately beside the negative (anode) lead of the LED (see the pinout). The LED must now be bent over at 90° to face the front of the board. A hole must later be drilled in the front panel of the instrument case to accommodate this LED. Ensure that there is sufficient lead length for the LED to reach the front of the case.

Now mount the speaker. Solder the -ve lead of C38 to one tag and secure the capacitor's body to the frame with a spot of holt melt glue or silicone adhesive. Glue the speaker to the case lid (cone upwards) on the lefthand side, towards the rear of the heatsink where there are slots in the lid, but see it doesn't foul the heatsink. Now wire-in the RS-232 connector, the reset switch (if used) and the line cable. The speaker and power supply are left unconnected at this stage.

Congratulations!, construction is now complete. Check to make sure that you haven't left anything out. If you have any bits and pieces left over, check the parts list and overlay diagram. If you find that any components (other than the ICs) have been left off, now is the time to make amends. Re-check the orientation of ALL polarised components, and when you are satisfied that all is correct, check all of your soldering work to ensure that there are no solder bridges across any of the tracks, particularly between IC pin pads, and that you have not omitted to solder any of the connections.

In the next article, you get to 'fire up' your project and assemble it in its case.

LEVEL

We expect that constructors of an

INTERMEDIATE

level, between beginners and experienced persons, should be able to successfully complete this project.

World Radio History

ALL ELECTRONIC COMPONENTS

Division of DOTHAIN Pty Ltd

118–122 LONSDALE STREET, MELBOURNE, VIC. 3000, Australia. Telephone 662 3506

After supplying kit Printed Circuit Boards and Front Panels for the past 22 years, All Electronic Components are proud to announce their distributorship of Jemal Products' P/L extensive range of quality goods and services—catering for Industrial, OEM and Hobby customers alike.

Jemal Products is one of Australia's most expedient producers of high quality printed circuit boards, panels, chassis and racks, plated through hole boards and assembly services.

- **HIGH QUALITY P.C.B.s**
- **NOTATION AND SOLDERMASK**
- **PLATED THROUGH HOLES**
- **SINGLE OR DOUBLE SIDED BOARDS**
- **NOTCHES, STANDARD AND NON-STANDARD HOLES**
- **GOLDING AND TINNING**
- **FAST DELIVERY**
- **ASSEMBLY**
- **PHOTOGRAPHY**
- **MEMBRANE SWITCHES AND LEXAN PANELS**

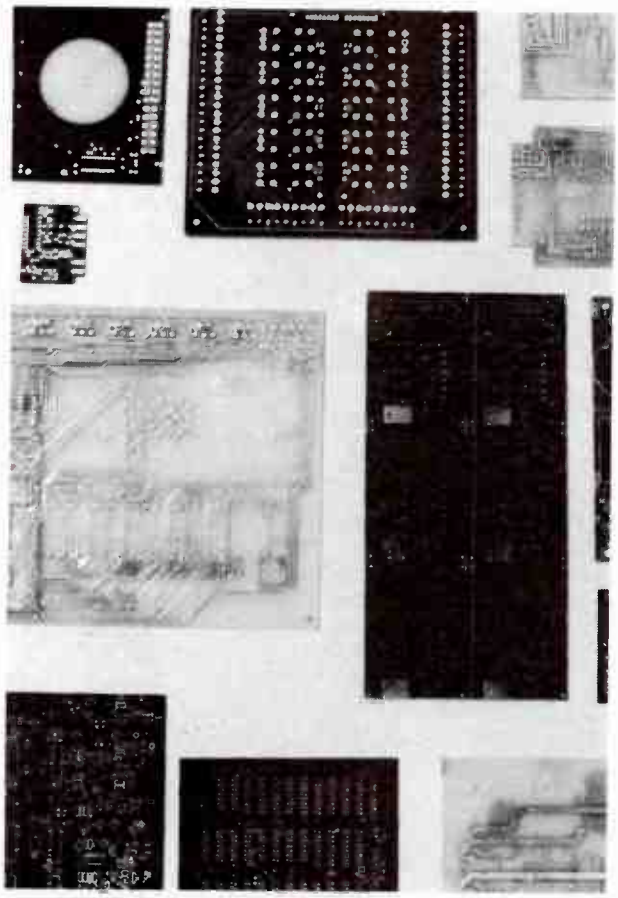

- **CLOSE LIMIT METALWORK**
- **PANELS CAN BE PUNCHED AND PRINTED ON ALL SURFACES, INCLUDING POWDERCOAT**
- **ACRYLIC PANELS CAN BE ENGRAVED OR REVERSE PRINTED, AND WE CAN PROCESS PHOTO ETCHED PANELS IN ALUMINIUM, BRASS AND STAINLESS STEEL**
- **TOOLING**
- **PROTOTYPES**

All Electronic Components are happy to quote on any job—large or small. Customers are invited to call our Sales Representative—Andrew Frolley—on 662 1381 for further details, or visit our Lonsdale St. store and view the impressive Jemal display.

Importers ◇ General Sales ◇ Radio Equipment ◇ Microwave Equipment ◇ Radar Equipment ◇ Pulse Techniques ◇ Industrial Electronics ◇ Instrumentation

World Radio History

FANTASTIC READER OFFER!

AEM4610 SUPERMODEM KIT

designed by Chris & Dan Darling, as described in Australian Electronics Monthly

By special arrangment with the designers, Australian Electronics Monthly is able to make this offer available, exclusive to our readers.

Don't miss this fantastic opportunity to own a truly smart modem and to enjoy the pride and satisfaction that comes from building it yourself!

Here it is at last! The modem kit that Australia has been waiting for. No need to buy expensive overseas modems when a kit is available to cover your current and future communications requirements. This kit has been fully designed, built and tested in Australia, so that local support is readily available. Furthermore, the kit is easily constructed by anyone with average soldering ability. To ensure a minimum of construction problems, all ICs are socketed and there are very few external passive components. All materials used in the kit are prime quality and there is even a "Sorry Dan, it doesn't work" offer available to all constructors. Even if you receive the kit and then decide that you aren't able to proceed, or if you can't get the completed kit to work, you can send $100 together with the kit to Maestro Distributors and it will be built (or fixed) and returned to you in fully working order.

The kit is supplied by Maestro and includes all components, pc board, EPROM (containing the required on-board software) and instructions.

Special Offer Price:

$295

(inc. tax)

Door-to-door delivery, anywhere in Australia: $6.60.

The expected retail price of the kit would normally be around $400.

If you plan on using this modem with your IBM PC or APPLE II, Maestro are able to supply, **for this month only**, Viatel software on 5.25" disk **for just $19.50** (normally $39.50). This Viatel software offer expires 30th May 1986.

★ An optional 16 Vac/1.5A plug pack power supply is available for an additional cost of $17.00.

This offer is made by Maestro and the magazine is acting as a clearing house for orders.

THIS AEM4610 MODEM KIT OFFER CLOSES LAST MAIL 30 JULY 1986

DON'T DELAY, COMPLETE THE COUPON NOW AND SEND IT, TOGETHER WITH YOUR CHEQUE, MONEY ORDER OR CREDIT CARD DETAILS, TO:

AEM4610 SUPERMODEM OFFER
Australian Electronics Monthly
PO Box 289, WAHROONGA 2076 NSW

If you do not require a full kit, you can obtain the pc board and EPROM (containing the necessary operating software) through the AEM PC Board Service for $139.00, inc. postage.

(Please allow up to four weeks for deliver to cover normal mail and cheque clearance and any unforseen delays)

RUSH ME my AEM4610 Supermodem kit for $295 (inc. tax) plus $6.60 delivery.

Please include (tick box if required):

☐ IBM Viatel software @ $19.50.
☐ Apple II Viatel software @ $19.50.
☐ Plugpack power supply @ $17.00.

I enclose $..... total, payment by (please tick payment method):

Cheque/money order* ☐ Bankcard ☐ Visa ☐
Mastercard ☐ American Express ☐

Card No .....

Expiration date: ..../..../....

Signature .....
(note: unsigned credit card orders cannot be accepted)

Name .....

Address .....

..... Postcode .....

(*Make cheques or money orders payable to Australian Electronics Monthly)

World Radio History

The Australian Electronics Monthly

USE YOUR COMPUTER TO RECEIVE

- Radio Facsimile Pictures (FAX)
- Radio Teletype (RTTY)
- Morse Code (CW)

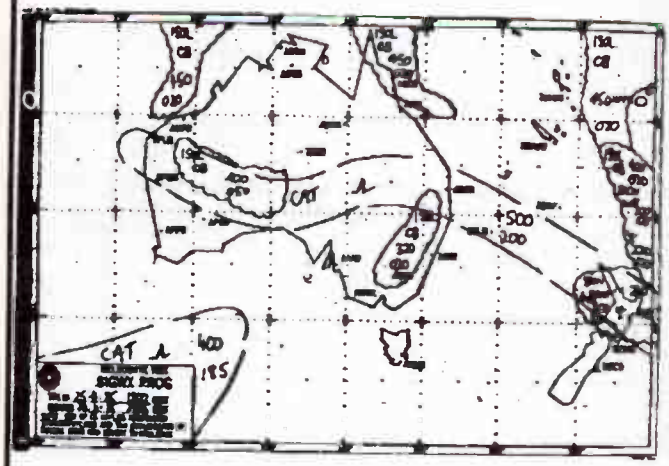

FAX picture

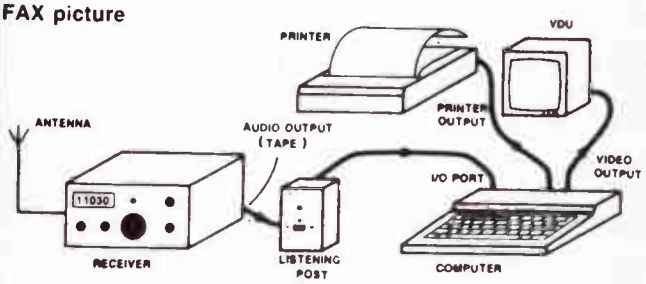

Decode RADIOTELETYPE/RADIO FACSIMILE PICTURES &/or CW using your computer and the AEM3500 Listening Post project.

GET THE AEM3500 "LISTENING POST PACKAGE"

for your ● Commodore 64 ● Microbee ● Apple II.

By building the *Australian Electronics Monthly* AEM3500 'Listening Post', a simple add-on decoder project for your computer and receiver, and using our software, you can receive weather map transmissions, amateur RTTY and foreign news services, plus amateur and commercial Morse transmissions.

There's a whole fascinating new world out there among the non-speech transmissions that were just an annoying 'burble' on your receiver previously.

The package comprises:

- Comprehensive constructional and operational details. (Normally $8.80 the set)
- A quality fibreglass pc board with printed components overlay.* (Normally $8.06)
- Software on either cassette or diskette. (Normally $19.50).

*** Components necessary to complete the project are widely stocked by electronics retailers.**

All for only **$29.95** save over $6!
Including post & handling

If you want the software only then send just $19.50 (inc. postage)

COMPLETE THE COUPON NOW

(a photostat will do) and send us a blank C10 cassette or *formatted* disk to suit your computer.

- We will gladly re-record any software that doesn't run.

Please rush me (tick choices):

☐ AEM3500 Listening Post software only
☐ AEM3500 Listening Post Package

to suit the:

Microbee &	Commodore 64	Apple //
C.Itoh 8510-type Epson FX80-type printer	(most printers)	(most printers)

DON'T FORGET TO INCLUDE YOUR NAME & ADDRESS

Send to: **AEM Software Service**
PO Box 289 Wahroonga 2076 NSW

I enclose payment by: Cheque Money Order Credit Card
(circle your choice)

Credit Card No.:

Expiry Date: . . /. . /. . .

Signed: . . . . . .
(Unsigned orders cannot be accepted)

Cheque or Money Order No. . . . . .
(Please make cheques or Money Orders payable to 'Australian Electronics Monthly')*

World Radio History

Philips release new UHF CB rig

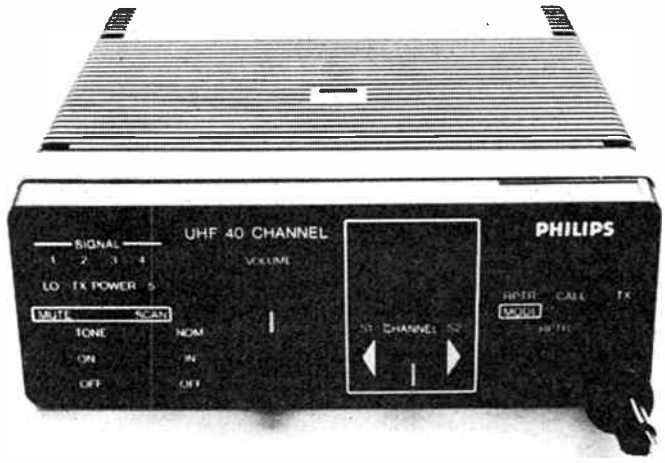

Philips Communications Systems launched in March the Australian designed and developed CRS FM 620 two-way radio operating in the 476.425-477.4 MHz UHF CB band.

Through the use of microcomputerisation, the 620 has the ability to provide a host of benefits, including fast channel scanning, progam nominated channels and improved receiver and transmitter performance, Philips claim.

The scanning function is standard, a feature previously not available on this type of product. Although the FM 620 is a 40-channel two-way radio, by the flick of a switch it can be used as a single channel unit ensuring that commercial users are always on the correct calling channel.

The FM 620 is also fitted with the facility to scan the eight channels allocated to repeaters; there are currently over 100 UHF repeater installations around Australia. Scanning in unfamiliar areas allows you to pick up local channels easily and quickly. A preferred channel can be nominated on the 620; this feature has obvious safety implications, Philips say.

Low cost 'selcall' is available as a plug-in feature that can be easily fitted by the dealer.

Philips see the FM 620 as extending the small business and rural markets that they opened up with the introduction of their FM 320 — Australia's first 40-channel UHF CRS radio.

Midwinter gambol in Mt Gambier

The South East Radio Group (SERG) will be holding its popular annual convention again in June this year. This is the 22nd convention held by the group and this year has been registered as a Jubilee 150 event for South Australia.

The convention attracts much interest due to the many interesting trade displays kindly staged by the various companies involved in the retail of amateur-related equipment.

There are of course the ever popular competitions. Such events as fox hunts, hidden transmitter hunts and on-air 'scrambles', to name a few, are available for those interested in competing for excellent prizes and the perpetual trophy. Of course, it should not be forgotten that the renewal of old acquaintances and the meeting of those faces behind the microphone is, to some, the most important part of all.

The convention starts on Saturday the 7th of June, with some fox hunts followed in the evening by the convention dinner. Sunday sees most of the serious competitions and of course the now famous lunch and tea. It really is a must to come along to Mt. Gambier on this weekend and join in the fun of this event.

Mt. Gambier is situated on the side of an extinct volcano (The Blue Lake) about halfway between Adelaide and Melbourne. There is much to see and do in this lovely city so come and make a few days of it while you are here. Accommodation is normally plentiful but as the city plays host to many sporting events etc on this weekend it is a good idea to book early. For a full program, accommodation guide and any other queries please write to the **S.E.R.G. Inc., P.O. Box 1103, Mt. Gambier. 5290 S.A.**

Field day fun and frolics

Inclement weather proved no dampener on the NSW Central Coast Amateur Radio Club's February field day frolic. The club committee reports an attendance of over 750 fun-finding fanaticists, and a few amateurs.

Seriously folks, this year's "Gosford Field Day", as it has come to be known, proved another winner. Over the years it has turned into a great amateur social event apart from the attractions of the equipment displays and the 'surplus sale'. It provides a great venue for making and renewing many an acquaintance.

Represented among the 'commercial' displays were AEM (for the first time!), Emtronics, Dick Smith Electronics, Icom and Kenwood. Oh yes, the WIA NSW Div., too.

No less than two packet radio groups had active displays. Packet sure looks like 'the coming thing'.

The foxhunts had a drop-off in participants this year, but those who did compete sure had a run for their money!

Each year, after the event, it has been a 'tradition' for some to gather at a local restaurant for a 'familial' dinner, to exchange off-air gossip, discuss topical and momentous current events within and without the amateur radio movement and generally have a good time. A certain group of amateurs will never again be able to view or hear mention of desert spoons and baked beans without raising a smirk! Doubtless the staff and other patrons at a certain East Gosford Chinese restaurant that evening will react likewise having overheard that fateful dinnertable discourse. **VK2ZTB**

Frequency lists

A pair of new publications designed to provide the SWL with all those generally unknown frequencies at his/her fingertips has been announced by GFS Electronic Imports.

The first, and newest, is by that well known German author "Klingenfuss". Known as a "Guide to Utility stations" it is a soft-bound book containing 465 pages of frequency users, their operating schedules, their modes of operations (SSB, RTTY, FEC, ARQ & FA) over the frequency ranges 0 to 150 kHz and 1.6 to 30 MHz.

As an added bonus this book also contains the twelfth edition of "Guide to RTTY Stations". The combination lists over 1500 frequency users including 80 RTTY press services along with 502 of their frequencies. As a further bonus, three large fold-out world maps show various areas and the frequencies used within them by the Aeronautical services over different parts of the globe. "Guide to Utility Stations" is available from GFS for $45 plus $5 p&p, catalogue no. UG-86.

The second publication is by Michael Schaay, a highly respected Dutch author who has gained his reputation through a number of well-received previous listings. Known as the "Radioteletype Press Broadcast Time/Order List" it is ideal, GFS claim, for those interested in monitoring the world's press services.

Its easy-to-follow layout lists 56 different agencies in time order, a total of 1500 entries. For those interested in a particular press agency this book also contains a time frequency schedule for each agency. Price of the publication, catalogue no. RTPB, is $25 plus $4 p&p.

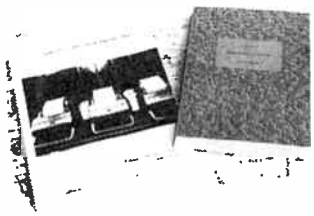

For further information, contact **GFS Electronic Imports, 17 McKeon Road Mitcham, 3132 Vic. (03) 873 3777.** ▶

World Radio History

ARE YOU A GOOD TECH?

We are looking for a good technician to join us here in our service department.

We are looking for someone who is creative and willing to learn. Someone who is not afraid to approach a new challenge. We would like someone with experience in monochrome video cameras and monitors.

So if you think you are a 'good technician' give us a call. Who are we?

We are AWA Rediffusion leaders in the industrial, professional and broadcast television industry.

Call the Technical Service Manager on 406 5677 for more information.

NOTES & ERRATA

AEM6503 Active crossover, Feb. '86: The parts list on page 58 suffered a few typesetting errors and omissions. Here are the corrections:

R51-R62 . . . . . chosen to suit the sensitivity of the drivers employed.
R63-R70 . . . . . 220R

Chasing the Comet's Tail, March '86: All the distances quoted in the article dropped three zeros somewhere, making them 1000 times less than they should be!

The Ins and Outs of RS232, Nov. '85: On page 89, under the heading "Odds and evens", the explanation of even parity and odd parity is in error. In fact, the parity bit *sets* the parity to odd or even, rather than *indicates* it's odd or even, as the explanation gives it.

AEM5505 'Hash Harrier', April '86: The parts list on page 34 specifies Varistors VZ1, VZ2 and VZ3 as type V250LA15A or V250LA15A (i.e: the same part). The alternative Varistor type is a **V250LA20A.**

SPECTRUM

Sawtron 999 UHF CB

Imark has released the Sawtron 999 Scanning Transceiver for the 477 MHz UHF CB market. It supersedes the very popular Sawtron 990 and the earlier Sawtron 880.

The Sawtron 999 is a UHF FM frequency synthesised mobile transceiver with 40 UHF CB channels and 5 watts RF power output.

The Sawtron 999 incorporates many features not available on similar radios. These include all-channel scan, memory scan, priority channel, and memory scan with priority scan.

The Sawtron 999 is compact and will fit into the smallest DIN-size radio aperture in vehicle dashes. Furthermore, it is idealy suited for remote mounting in compact vehicles, Imark say.

Further details can be obtained from the importers, **Imark Pty Ltd, 167 Roden Street, West Melbourne 3003 Vic. (03) 329 5433.**

New version of CPU-100 radio modem

Melbourne-based GFS Electronic Imports, manufacturers of the CPU-100 Intelligent Radio Data Modems have announced a new upgraded version of their unit.

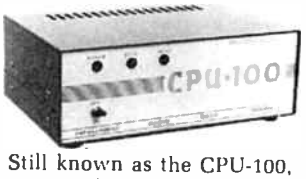

Still known as the CPU-100, the upgrade includes, among other changes, the use of a more robust metal cabinet. Also, Block Exchange Compelled Sequence Protocol — BECSP — is now used to provide fully error-corrected data transfer over a simplex or duplex radio channel.

As such, the CPU-100 is ideally sited for use with radio systems using UHF, VHF or HF. It is particularly attractive to high frequency band users where previously only the very restrictive Baudot Code (telex characters) was available using the ARQ & FEC modes of CCIR recommendation 476 (TOR), GFS claim.

The CPU-100's BECSP allows the full 8-bit ASCII character set to be used thus making data communications available for use over a radio link between different types of data processing systems, computers, peripherals and remote sensing devices.

BECSP also provides a full duplex data circuit with a data flow in both directions even when a single simplex radio channel only is used. It provides this capability by alternatively changing the transmission direction as each block of data is exchanged.

BECSP's error free data transfer has been realised by using a combination of parity checking on each byte as well as longitudinal redundancy check of all block characters. The format used with BECSP is similar in concept to that used for data transmission by the Voyager spacecraft now heading toward the planet Neptune, according to GFS.

Interfacing is via an RS232 port using a standard 25-pin DB Connector. The radio equipment interface requires access to audio out, mic in and push-to-talk lines only.

If you would like further information, contact the Australian makers **GFS Electronic Imports, 17 McKeon Road, Mitcham 3132 Vic. (03) 873 3777.**

World Radio History

Radio Communicators guide to the ionosphere

Part 6

Leo McNamara and Roger Harrison

Predictions for HF communications

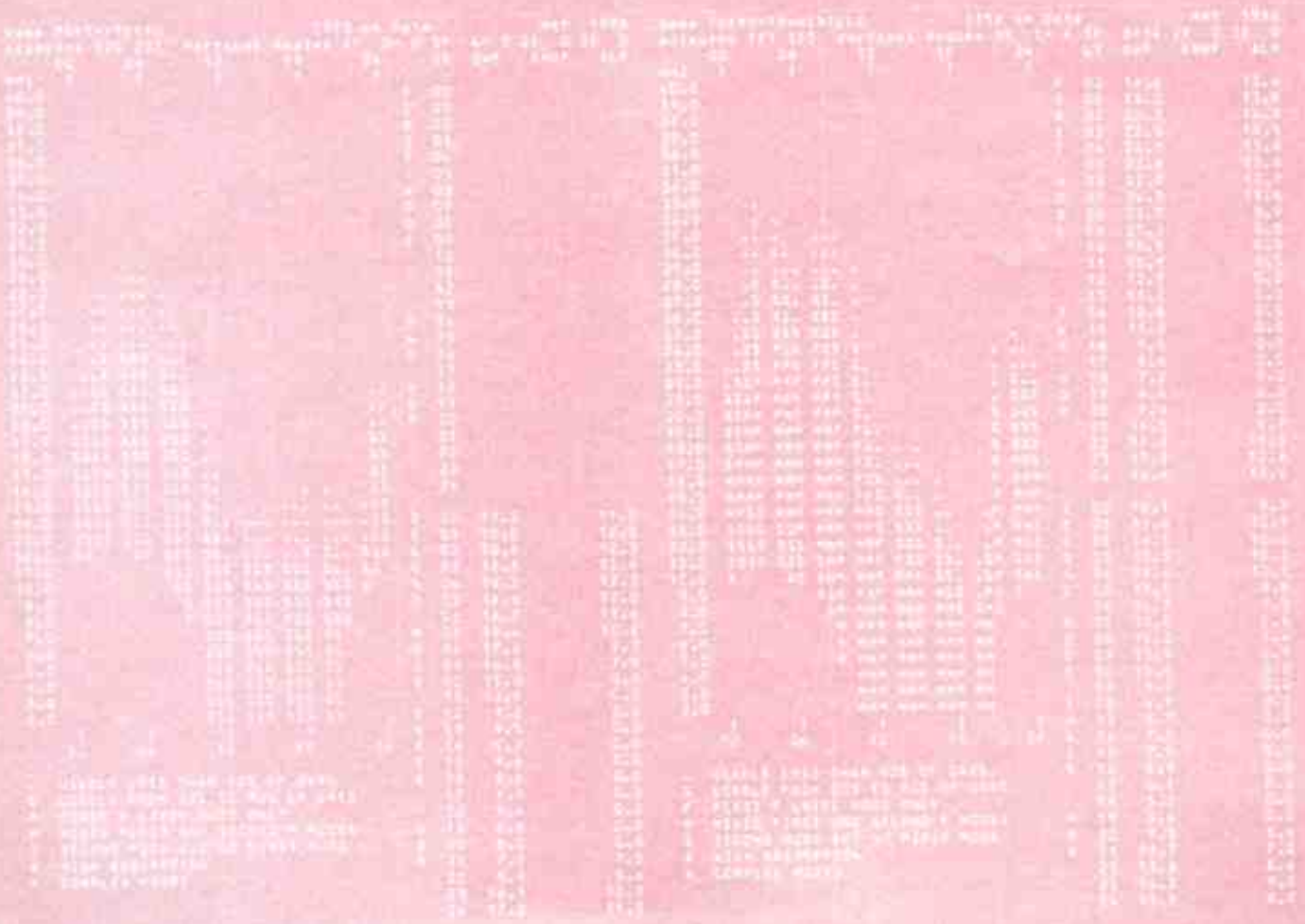

World Radio History

BECAUSE HF communications over long distances rely on reflection from the ionosphere, and because the ionosphere is so variable, it is not possible to pick a convenient operating frequency and expect to maintain a communications link using that frequency at all times. Instead, it is necessary to choose a frequency which the ionosphere will support *at the required time* on the circuit being considered. To do this successfully, we must take account of all the variations which the ionosphere along the circuit undergoes — location, season, time of day, altitude and solar activity. We must also determine the effect of the geometry of the circuit on the range of frequencies available for use on that circuit, and take into account non-ionospheric restraints such as antennas and transmitter/receiver constraints. This article describes the procedures adopted in practice to take account of the ionospheric and propagation factors which determine the choice of operating frequency.

There are four steps which must be followed when taking these factors into account. These are:

(1) Predict what the sun will be doing during the time for which the required predictions will apply.

(2) Determine what the ionosphere will be doing as a result of the predicted level of solar activity. In other words, set up an ionospheric model.

(3) For this ionospheric model, calculate the geometry and propagation modes for the circuit under consideration.

(4) Calculate the propagation parameters, namely MUF, LUF and field strengths.

The first step is at best an educated guess, which we will describe further in "Errors in predictions", after we have considered steps (2), (3) and (4) in some detail.

Models of the ionosphere

A model of the ionosphere, or more briefly an ionospheric model, is just a recipe that tells us all we need to know about the ionosphere at some point, in particular at the reflection point(s) for a given circuit. For many purposes, all we need to know are the critical frequencies for the E and F layers, foE and foF2, and the height of the peak of the F2 layer, hmF2. The height of the E layer can safely be set equal to 110 km for most applications.

For more sophisticated studies, we would also need to know how the electron density varied with height, all the way from the D region to the peak of the F2 layer at hmF2. In other words, we would need to know the *electron density profile* of the ionosphere.

Ionospheric models exist in various forms. A perfectly adequate model for foE is given by equation 4.1 which we met in Part 4a (Jan. '86). The model for the height of the peak of the E layer, called hmE, simply states that hmE = 1108 km.

Models for foF2 and hmF2, on the other hand, are not so simple and a large amount of effort has been spent by the international scientific community in perfecting a suitable model. Some of the more accurate models, which will calculate foF2 and hmF2 at any point on the earth at any time, exist as large computer programs which require large computers for their operation. Simplifed models have been produced which can be evaluated on hand-held calculators, but the accuracy of the models is severely limited when compared to that of the large computer programs.

Because the F2 region is so complex, models of its variations with time of day, season, position and solar activity have had to be constructed using enormous numbers of observations made all over the world for many years. About 180 ionospheric stations have been operated throughout the world, although not all 180 were ever operating at the one time. Currently there are about 100 stations in routine operation. Many stations have been operating for more than 30 or 40 years, the first being Slough (U.K., 1930), Watheroo (Western Australia, 1935), Washington D.C. (1933), Tomsk (USSR, 1937) and Tromso (Norway, 1932). The number of operational stations is at present undergoing a surge, with the deployment of new, modern ionospheric sounders (ionosondes).

The maps which are produced of ionospheric parameters such as foF2 and hmF2 are based on monthly median values observed at the 180 or so stations for low (R = 0) and high (R = 100) levels of solar activity. They give the variations of foF2 and other parameters as a function of position on the earth — in other words, they take account of the *geographic* variations of the ionosphere. There is a map for each month and local time, taking into account the *seasonal and diurnal* variations of the ionosphere. The fourth and fifth variations which must be taken into account are the variations with *height* and with *solar activity*. The former is accounted for by mapping the E, F1 and F2 layer parameters separately. As we saw in Part 4b, the variation with solar activity can be represented by calibration curves (straight lines in fact) which relate monthly median values of foF2, say, to monthly average values of the sunspot numbers, for a given station, month and hour. Each of the calibration curves can be used to derive monthly median values of foF2 at two levels of solar activity, R = 0, and R = 100. This is done for each of the 150 stations and contour maps drawn. There will be 576 maps of each ionospheric parameter — 12 months × 24 hours × 2 levels of solar activity.

The complexity of the F-region variations as compared to those of the well-behaved region is illustrated by Figures 6.1 and 6.2. Figure 6.1 shows comparative plots of the solar zenith angle (upper panel) and the observed median values of foE for June at solar maximum, as a function of geographic latitude and longitude. Plots such as these can be drawn for each month of the year.

To see what time sunrise and sunset occur for a given latitude, for example, just follow the horizontal line in the upper panel corresponding to that latitude until it hits the 90 degree contour. (The sun rises and sets when the zenith angle is 90 degrees.) If we do this at 30 degrees N, say, we find that sunrise and sunset occur at 05 and 19 LT respectively. At the north pole, where the latitude is 90 degrees, the sun stays above the horizon all day in June, while at the south pole, the sun never rises (the 90 degree latitude line never hits the 90 degrees zenith angle curve).

We can do the same thing in the lower panel of Figure 6.1 and find the value of foE at any time. Thus at 30 degrees N, foE increases through 1.6 MHz at 05LT, passes through 3.0 MHz at 07LT, and just exceeds 4.0 MHz for the period 11-13LT. It then decays, passing through 1.5 MHz at around 19LT.

The important thing to note about the two panels of Figure 6.1 is that the shapes of the sets of contour lines are basically the same. This tells us that the E layer, and foE in particular, is strongly controlled by the position of the sun in the sky, which is measured by the solar zenith angle. In fact, the relationship is so close that it is possible to express foE as a simple equation in terms of cos Z,

$$foE = 0.9\,[(180 + 1.44R)\cos Z]^{1/4}.$$

This is equation 4.1 which we met in Part 4a. The sunspot number R takes account of the fact that the ionosphere as a whole has higher critical frequencies at high levels of solar activity. ▶

World Radio History

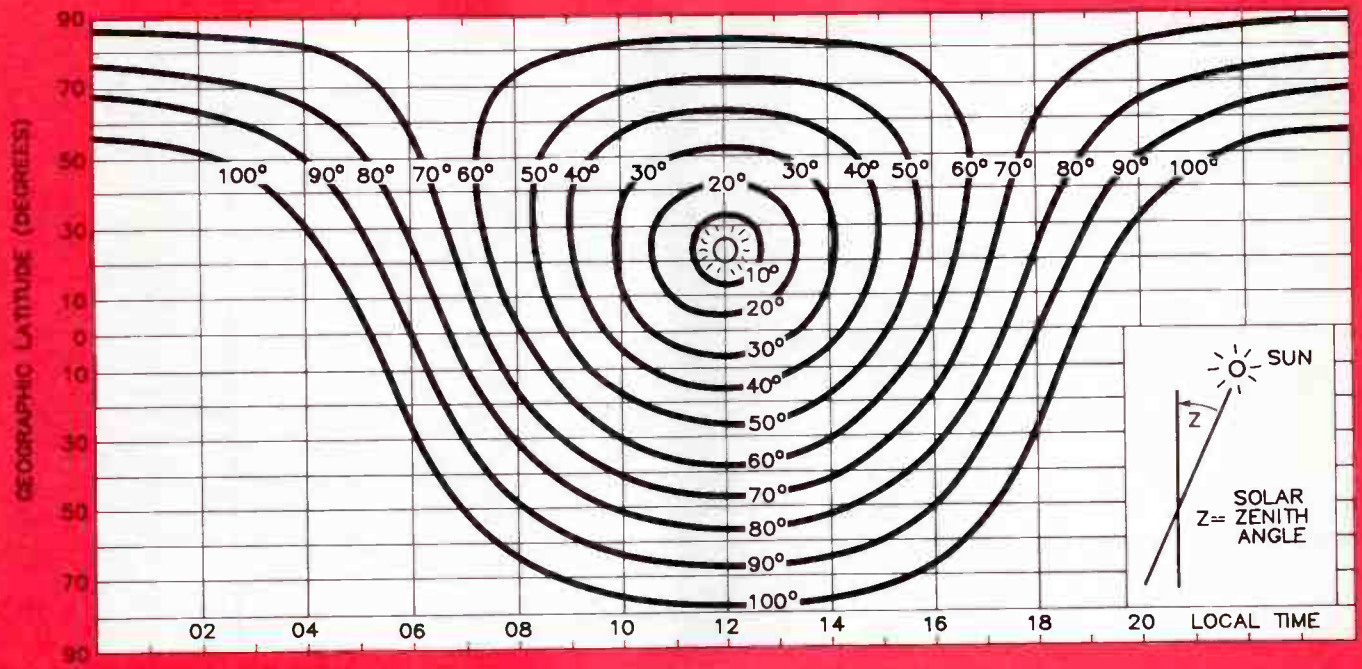

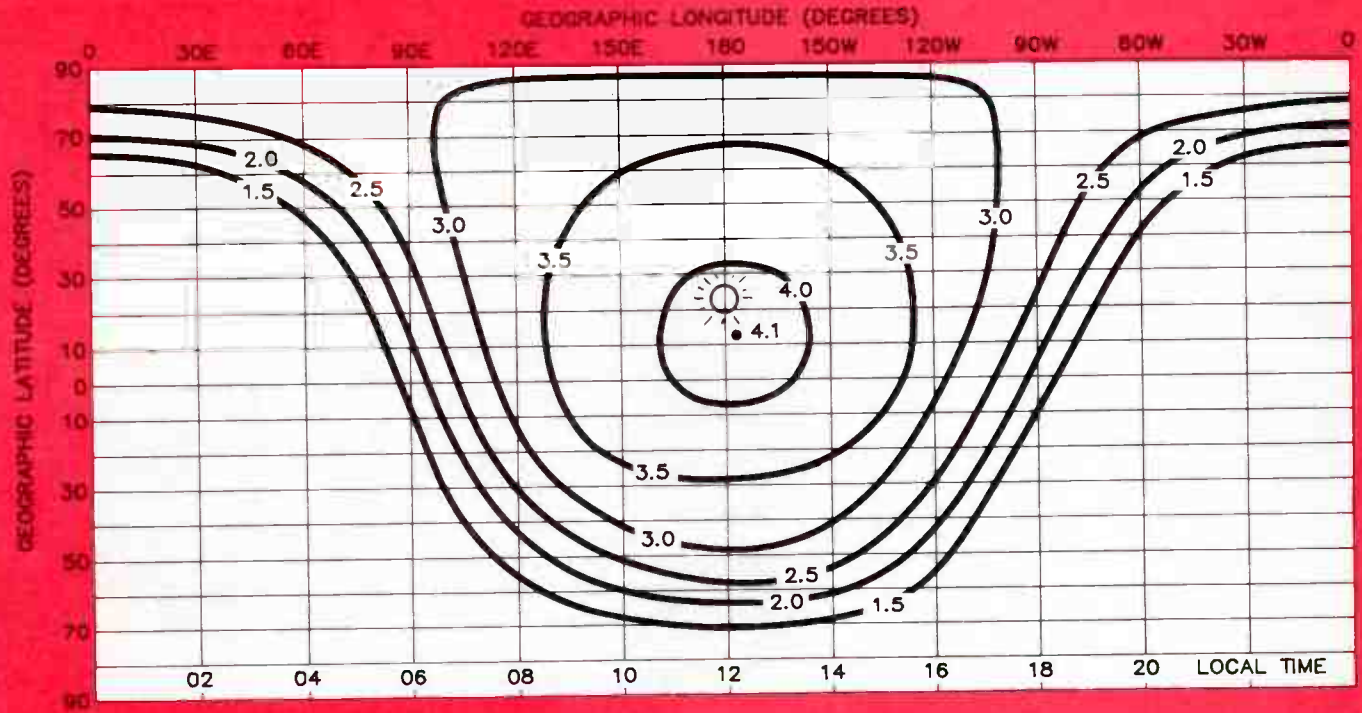

Figure 6.1. Corresponding plots of the solar zenith angle and the critical frequency of the E layer, foE, for 00UT in June at solar maximum. The important thing about the two plots is that the shapes of the contours are almost identical. This means that the value of the foE is largely determined by the size of the solar zenith angle, making it easy to predict a value of foE. All we need to know is where the sun is in the sky.

World Radio History

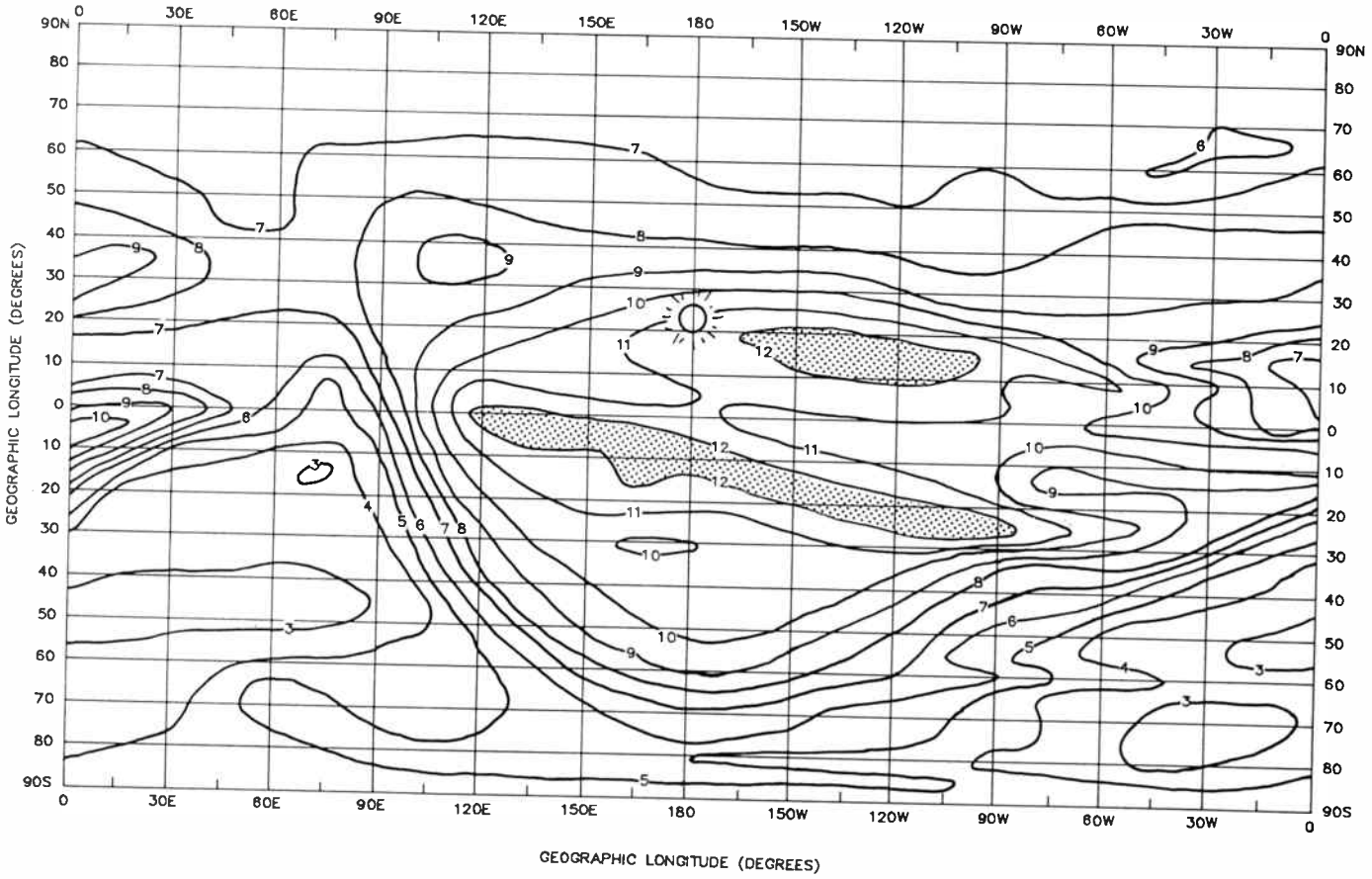

Figure 6.2. The critical frequency of the F2 layer, foF2, at 00UT in June at solar maximum. The contours of foF2 do not follow the contours of the solar zenith angle in the way that contours of foE do. This means that knowing where the sun is in the sky is not sufficient for us to be able to work out the value of foF2. The only time that the contours of foF2 follow the zenith angle contours in this figure is during the sunrise period in the winter hemisphere (around 20 degrees S, 105 degrees E). The sun is overhead at a longitude of 180 degrees, and at the Tropic of Cancer.

Figure 6.2 is the F-layer counterpart of Figure 6.1 and we can see immediately that while the contours of foF2 follow the shape of the zenith angle curves during the sunrise period in the southern hemisphere (90 to 120 degrees E at 00UT), they bear no resemblance to the zenith angle curves in other parts of the world. The shaded areas indicate the crests of the equatorial anomaly which we met in Part 4b (March '86) and which we know to be strongly affected by the earth's magnetic field and not compeletely solar controlled.

The sunset period (90 to 60 degrees W) is particularly irregular, and is followed by quite large values of fof2 which do not decrease to zero as the sun sets. In this case it is winds blowing in the neutral atmosphere (at F-region altitudes) which keep the F2 layer at relatively high altitudes and minimise the loss of free electrons by recombination processes.

Because we need to map foF2, in spite of its complexities, it is common practice to draw maps of foF2 at a fixed *local* time, rather than a fixed universal time. Although the maps have no physical significance (recall that we get a snapshot of the ionosphere if we specify a fixed *universal* time), they have simpler shapes than fixed UT maps and are thus easier to represent by formulas or on a computer.

Figure 6.3 is a local time map of foF2 for 00LT, June, solar maximum. The contours have much simpler shapes than those in Figure 6.2, because the large diurnal variations caused by the changing zenith angle of the sun do not exist in this type of plot. If the sun were the only factor controlling foF2, the contours would be straight lines parallel to the geographic equator. This is true for foE. However, the F2 layer is also affected by winds and by the earth's magnetic field, both of which vary with geographic longitude, and the contours are not so simple. The effect of the earth's magnetic field in the equatorial regions is clearly shown by the 6, 7 and 8 MHz contours, which follow the geomagnetic equator plotted in Figure 4.12 (March '86, page 70).

Geometry of the circuit

The geometry of the circuit has to be calculated because it determines the obliquity and thus the MUF, according to equation 5.3 (April '86, page 86). The first thing we have to do is decide what propagation modes we are going to consider. We have previously seen that there are often many modes possible, but it is not feasible or necessary to consider them all every time we want to calculate an MUF. In practice, we can get away with considering only the lower order modes. As a working rule, a propagation mode may be ig-

World Radio History

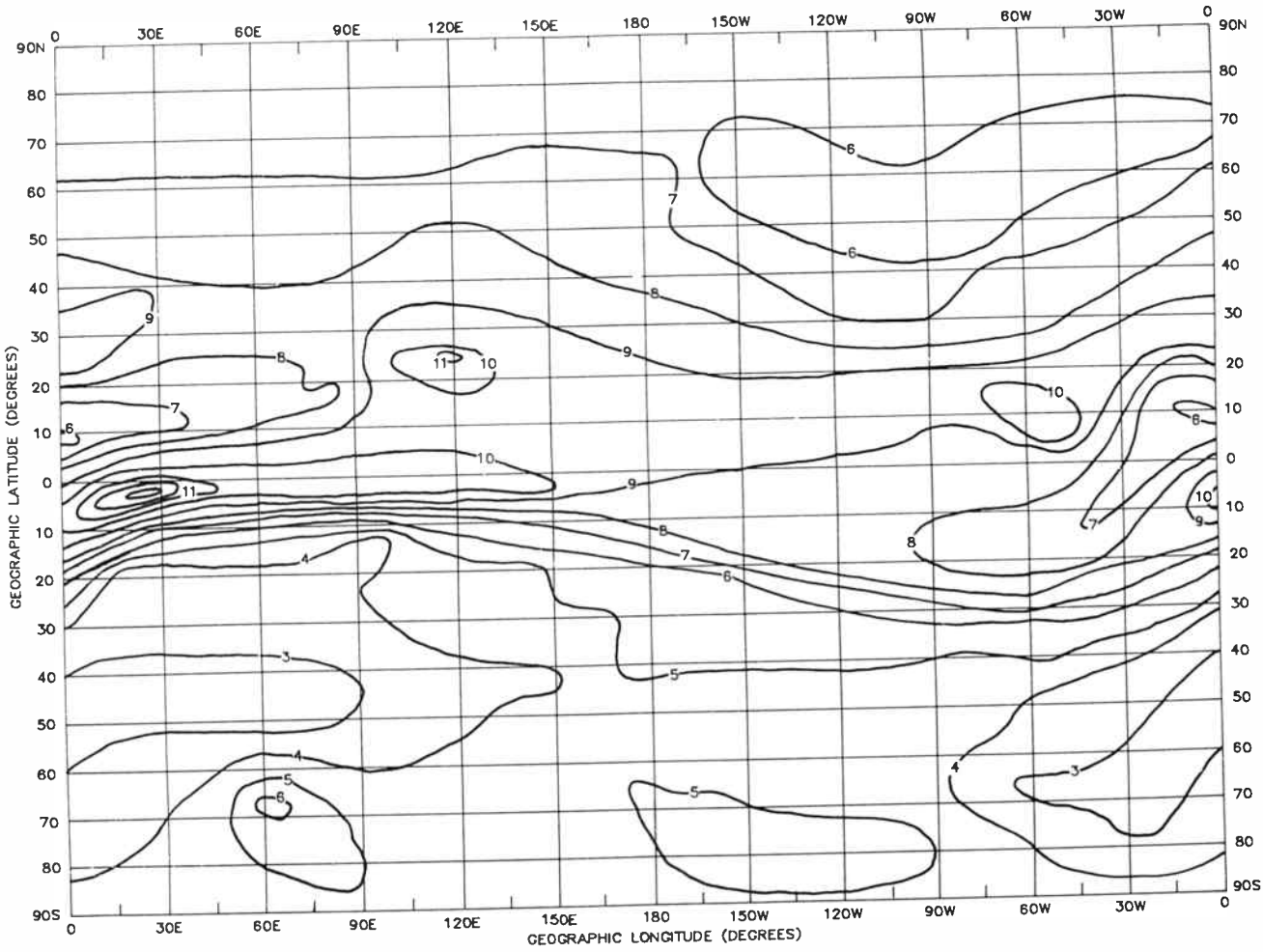

Figure 6.3. A local time map of foF2 at 00LT in June at solar maximum. The contours of foF2 in this map have a much simpler structure than those in Figure 6.2, and are thus easier to represent by formulas. In the equatorial regions, the contours follow the magnetic equator. The sun does not appear in the diagram because it is midnight at all longitudes in this form of presentation of the data.

nored if it involves more than two reflections from the E layer. This is because signals reflected from the E layer suffer much heavier absorption than those reflected from the F layer.

F-region hops are normally considered possible on circuits up to about 3000 km in length at midlatitudes, and up to about 4000 km at low latitudes where the F layer is higher, while E-region hops are considered possible on circuits up to about 2000 km in length. Note that these circuit lengths correspond to very low elevation angles and cannot be attained with simple antennas which radiate very little power at these angles. If an F-layer circuit is longer than 3000 km, propagation by a 1F mode would not usually be possible and the lowest order mode would be the 2F mode. For very long circuits, the "control point" technique is used, in which it is assumed that the only parts of the ionosphere relevant to the problem of calculating the MUF are at the first and last reflection points at the F layer and these are assumed to be 1500 km in from each end of the circuit.

Once we have decided what propagation modes to consider, it is a simple matter to calculate the obliquity factor for each hop of the propagation mode, and the values of foE, foF2 and hmF2 at each reflection point. Reflection is assumed to take place at the midpoint of each hop.

Calculation of the MUF and LUF

We have discussed the calculation of MUF in some detail in Part 5, so we will not discuss it here. Calculation of the LUF is a little more empirical (we use something that works, without worrying too much about why it does) because it depends on things other than the absorption caused by the ionosphere. However for short circuits, and with well planned equipment, it can be related quite simply to foE by a simple formula. This is not surprising because the absorption is mostly due to the D region, which depends on the zenith angle in much the same way as foE.

For long circuits, the LUF can be set equal to the first frequency which is just too high to be propagated on a mode involving two E-layer reflections, since any signal reflected twice by the E layer will be severely attenuated. At night, when there is no absorption, the LUF is controlled solely by the antenna characteristics, the transmitter power and the noise level, all of which vary with frequency.

Uses of HF predictions

Like many things in life, the information which will tell us what frequency to use at a given time arrives on sheets of ▶

World Radio History

paper. The accompanying panel gives a brief description of one of these sheets, the one described being issued by the Australian Ionospheric Prediction Service. This particular form of predictions contains a wealth of information, including the modes which the circuit will support and the probability of a frequency being available. Simpler forms are available, which are easier to use, but contain a correspondingly smaller amount of information. Other administrations provide similar services.

What do we do with the sheet of paper which tells us what frequency to use at any hour of a particular month on a given circuit? Some of us throw it away because we figure that we can do better on the basis of our general experience and by taking into account what has been happening to our circuits over the last few months or years. This practice often has dire consequences, because of the extreme variability of the ionosphere. If it were all that easy, we would at least have to question the sanity of the thousands of scientists who have devoted a large amount of their time to the prediction business!

The serious user of HF predictions will use them for planning a communications network, choosing between allocated frequencies, or as a bare minimum will use them as a backup when things go wrong and his experience fails him.

Planning a communications link

Somewhere along the line, every communications link that is in use has been planned in one way or another. In planning a communications link, we must consider all aspects of the problem — choice of transmitting and receiving sites, choice of antennas, choice of appropriate transmitters and receivers, choice of operating frequencies, and choice of transmitter power. We shall concentrate here on the choice of operating frequency and leave consideration of the other choices to later articles.

Ideally, we would like to use each frequency as it becomes the best for our purposes, but this would lead to utter chaos in the HF band. Consequently the use of the HF band (and any other band from ULF to SHF) is heavily regulated both nationally and internationally, and we can use only the few frequencies allocated to us by the appropriate Frequency Allocation Board. Our aim must therefore be to ensure that the frequencies allocated to us are the best for our purposes.

How do we determine what frequencies we need? We go to an organisation which can give us what are called *planning predictions* for our circuit. This is a set of predictions in general containing values of MUF, LUF, angles of elevation, probability of propagation and so on for four months (March, June, September and December) to cover the variation of the ionosphere throughout a year, and for several levels of solar activity (typically low, medium and high) to take account of the variation of the ionosphere with solar activity. We then sit down with a pencil and ruler and work out what frequencies we would require to maintain communications.

This is usually a trial and error approach (even if it is done by computer) during which we make our decisions about how important it really is to ensure communications at a particular time. We would normally like to have at least a 90% chance of success, so we would choose a frequency below the optimum working frequency (OWF). A typical circuit requires a set of four frequencies to cover a whole solar cycle, with a fifth necessary if communications are essential during the pre-dawn period in winter at solar minimum, when the OWFs are very low.

Having decided what frequencies we require, we then approach our national Frequency Allocation Board which does its best to give us what we need, within the constraint of the frequencies not having already been allocated to another user. This is not an easy matter and what we ask for is not always what we get. However, most Frequency Allocation Boards will listen to a reasoned and well-substantiated argument and do their best to oblige.

In practice, the large Governmental organisations get more or less what they need while the smaller user must normally be content with two frequencies, a *day frequency* and a *night frequency*. A great deal can be done with just two frequencies, but it is not normally possible to ensure 24-hour communications. However, this is often not required by the small user. If only one daytime frequency has been allocated, it may be necessary to have this change as the solar cycle progresses. A frequency allocated for daytime use at high solar activity will probably not be useful at low solar activity, and vice versa.

Selecting a working frequency

Once we have a set of frequencies allocated to us for use on our circuit(s), the next step is to choose which frequency to use at a given time. This is no problem if we have only two frequencies — during the day we use the higher of the two, while during the night we use the lower one. If things go wrong during the night we use the lower one. If things go wrong during the day, such as an ionospheric storm (see Part 4) or interference from another user, we could always try the night frequency but since this is probably below the daytime LUFs, we cannot expect much joy.

If we have a set of frequencies to choose from, we can adopt several strategies. We could keep working a frequency until it drops out and then change to our next highest or lowest allocated frequency, depending on what time of day it is. Alternatively, we could stick rigidly to HF predictions for our circuit and change to another frequency when the predictions tell us to do so. As well as indicating a faith in the usefulness of HF predictions in general, this strategy could save a lot of hassle because both communicators have a predetermined plan of what frequency to use at a given time.

A third strategy is to throw the HF predictions away and rely solely on our experience to tell us what to do next. This strategy can be quite successful, provided the ionosphere remains much the same as it has been while we have been accumulating our experience, but simple experience will fail for most of us at one time or another. Those communicators who continue to rely on experience to choose the correct frequency could usually have more successful combinations if they were prepared to be guided by HF predictions for their circuit.

A survey of HF communicators in Australia carried out by the Australian IPS Radio and Space Services found that the majority of communicators surveyed used the HF predictions provided to them at least as a guide as to what to do, even if they were not followed rigidly. This reliance on the predictions instead of "experience" was most marked for the large organisations, either because it had been found over the years that this was the most successful policy to adopt, or because it was recognised that the people involved did not have the required "experience" to be able to work without the support of the predictions.

Errors in predictions

Many predictions made for HF communications will be wrong to some extent. This is the nature of the game. However, we can and always should attempt to minimise the errors in our predictions.

How do the errors arise? To answer this question, all we need to do is review the stages involved in making HF predic-

— to page 94 ▶

World Radio History

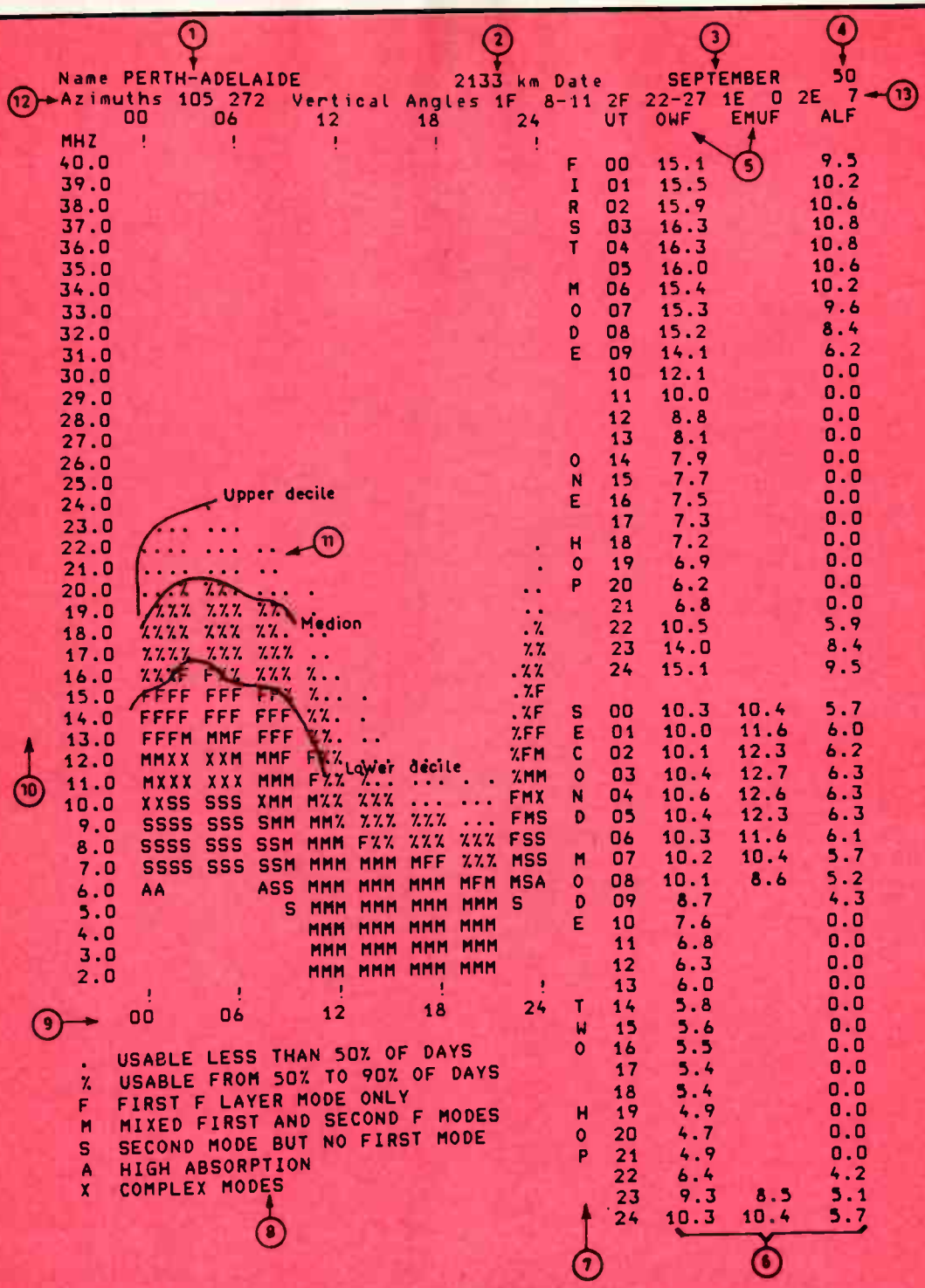

GRAFEX FREQUENCY PREDICTION

The GRAFEX frequency prediction produced by the Australian IPS Radio and Space Services contains in a very compact form, all the ionospheric information ordinarily necessary for the effective and efficient operation of an HF radio circuit. The bulk of the IPS predictions is in the GRAFEX form.

MAIN FEATURES

1). Identification usually the names of the terminals of the circuit (generally western terminal first).

2). Circuit length great circle distance between terminals.

3). Time period usually a particular month; but can be any particular day or period (seasonal variation).

4). T-Index or Year the level of predicted solar activity is specified either explicitly by the T-index number or implicitly by the year for which the prediction applies (solar cycle variation).

5). Two layers predictions are made for both the E and F layers (height variation).

6). OWF, EMUF, ALF tables of optimum working frequency, E-layer maximum usable frequency and absorption limiting frequency.

7). Two modes predictions are made for the two lowest-order modes (least number of hops), except for circuits <500 or >12 000 km. The antenna determines which is the dominant mode.

8). Key to symbols brief description of the GRAFEX symbols used.

9). Horizontal axis Universal time (diurnal variation).

10). Vertical axis HF spectrum.

11). Statistical limits Upper decile, median, and lower decile of the MUF for the first F mode.

12). Azimuth The true (not magnetic) bearings in degrees from each of the two terminals (normally western terminal first).

13). Elevation angles radio wave take-off angles for each mode for each layer.

World Radio History

A masthead mounted low-noise GaAsFET preamp for the UHF amateur and CB bands

Dick Smith Electronics
Research & Development Division

This easily constructed unit will improve the receiver performance of your UHF rig 'out of sight', particularly if you find it necessary to run a long length of feedline between your antenna and your rig.

ONE OF THE MAIN FACTORS that contribute to the 'station system performance' of any UHF communications installation, be it amateur, CB or 'professional', is receiver *front end noise figure*. Two things, primarily, determine this parameter: feedline loss between the antenna and the receiver input, and the noise factor (or noise figure) of the device employed in the first stage RF amplifier. You can virtually eliminate the contribution of feedline loss by mounting the receiver's first RF stage as close as possible to the antenna feedpoint. The next step is to employ a low noise device for that first RF stage.

A problem arises here, in that the vast majority of transceivers available do not have a demountable front end — it's securely built-in with the main equipment. To get around this little inconvenience, one employs an 'outboard' RF stage, or preamp.

Twenty years ago there was little choice in low noise devices for UHF applications. The start-of-the-art was represented by a vacuum tube (or valve) known as the 416B, a specially-constructed 'lighthouse tube' (because that's what it looked like). It could achieve a noise figure in the 400-500 MHz region of "better than 3 dB" when front end noise figures of 6-10 dB were common.

These days, a noise figure around 1 dB or so is regarded as pretty well state-of-the-art in the 400-500 MHz region, readily achievable with a variety of solid-state devices. While bipolar transistors held sway for over a decade in this area, more recently gallium arsenide field-effect transistors (GaAsFETs — "gas FETs" to the congniscenti) have moved to the fore. When first introduced, GaAsFETs for the application were a *fearsome* price — anything from a week's to a month's average take-home pay. But, as is historically the case with most electronic devices, their price has fallen substantially in very recent history and now they may be purchased at a cost similar to many commonplace semiconductor devices.

This month's ★ Star Project ★ is from Dick Smith Electronics who will be marketing kits through their stores and dealers; cat no. K 6309, $129. Mail order enquiries to PO Box 321, North Ryde 2113 NSW. (02) 888 3200.

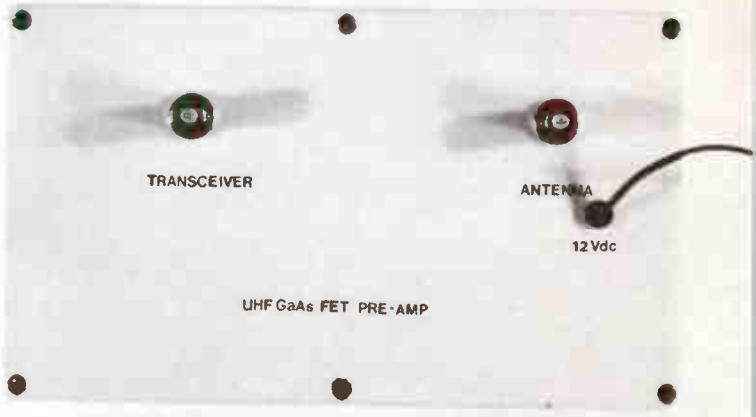

The preamp is housed in a diecast aluminium box which is mounted as close as possible to your antenna. Note the dc supply lead entering the box at right.

Design considerations

In order to perceive the benefits derived from using a masthead preamplifier it is necessary to understand some of the mechanisms involved. In the lower VHF bands, thermal noise from the sky does not make it worth trying to achieve a noise figure less than about 2 dB for terrestial communications. At higher frequencies however, a low noise figure will give significant improvements in receiver performance as the level of thermal noise is lower and the majority of noise present will be generated in the receiving system itself. The 3SK121 GaAsFET used in this amplifier has a typical noise figure of 1.5 db at 800 MHz.

Many operators would be surprised at the noise figure offered by some commercial transceivers, which, particularly with some UHF CB units, can be up to 5-6 dB. It is the first stage of a receiver which, to a large extent, determines the total noise figure. If an amplifier with a noise figure of, say, 1.5 dB is added ahead of a receiver with a 5 dB noise figure, the resulting noise figure of the system will be only slightly higher than the noise figure of the amplifier itself. Therefore, the signal-to-noise ratio of received signals will be much improved.

It is a popular misconception that a preamplifier fitted inside a transceiver will achieve a similar performance. This is borne out by the number of operators who use the recent breed of RF power amplifiers with in-built GaAsFET receive preamps. These can be considered a singularly useless device when trying to achieve low noise figures, unless mounted at your antenna, the reason being that feeder loss is ignored.

For example, assume that you have a typical UHF setup of a Yagi antenna, 15 m (50 ft) of 'good quality' coaxial feedline (RG213), a linear amp with GaAsFET preamp and your rig. Now, reading the manufacturer's blurb on the preamp gives a noise figure of under 1 dB (typically). You would be ▶

World Radio History

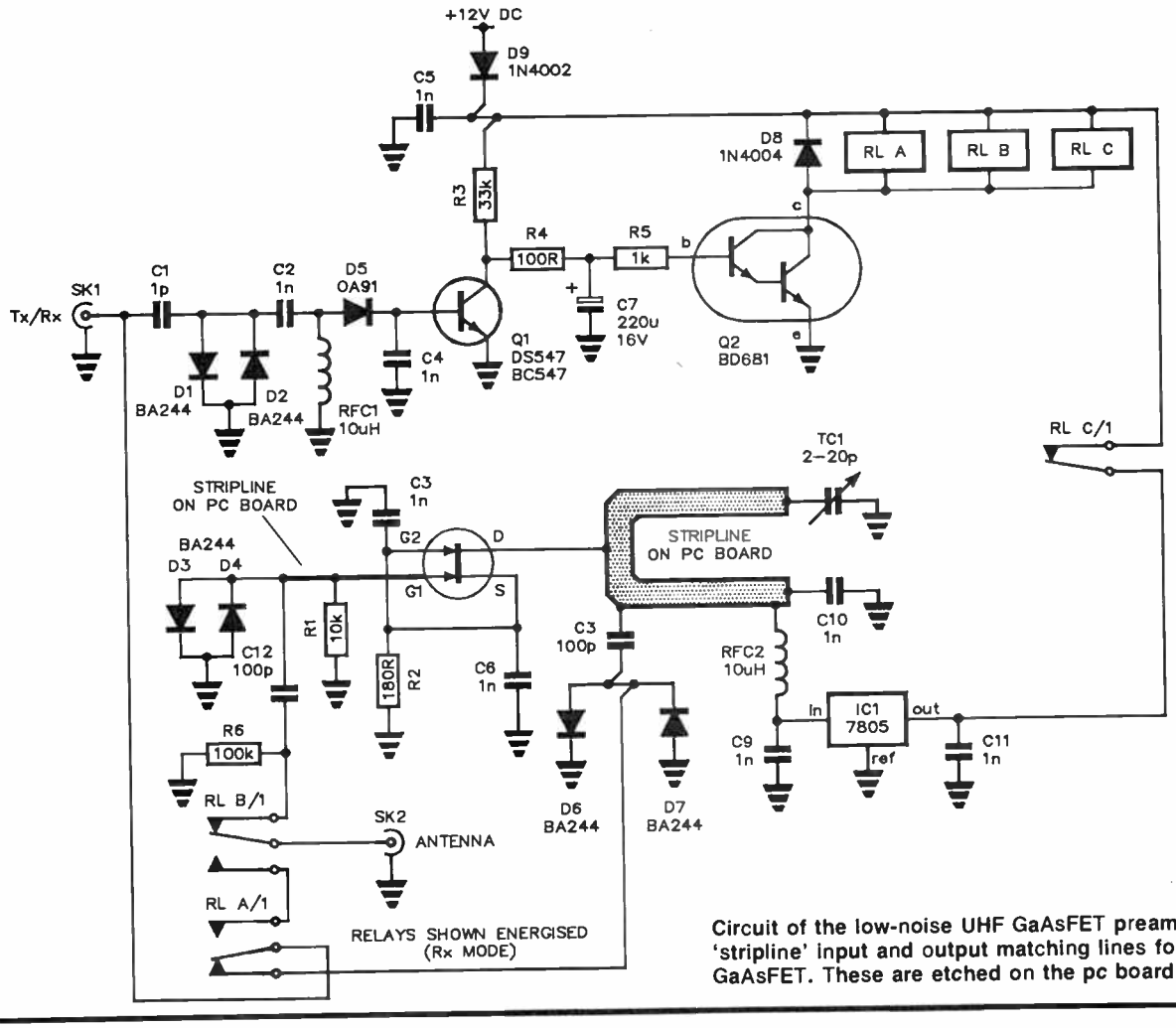

Circuit of the low-noise UHF GaAsFET preamp. Note the 'stripline' input and output matching lines for the GaAsFET. These are etched on the pc board.

CIRCUIT OPERATION

The 'heart' of the amplifier is the Toshiba 3SK121 GaAsFET. Input and output to the device is by means of printed circuit board stripline circuits. The output tuned circuit is resonated by TC1, a 2-20 pF trimmer.

In the 'through' mode, the antenna input is connected via the two coaxial relays and 50 ohm stripline to the output socket.

In 'receive' mode the three relays, RLA-RLB-RLC, are energised. This is done to provide 'fail-safe' operation so that if the 12 V supply to the amplifier should fail or be inadvertently turned off, the amplifier will assume the 'through' mode.

Coaxial relays RLA and RLB connect the antenna to the input of the amplifier and the output to the receiver or transceiver. The miniature relay, RLC connects the supply from the five volt regulator IC1, to the GaAsFET. The 3SK121 is self-biased via R2 in the source circuit.

The antenna is coupled to the amplifier via C12. The 100k resistor, R6, are used to provide a dc path to ground to prevent build-up of static voltages on the antenna.

The unit employs RF sensing to switch between receive (preamp) and transmit (through mode). Fast-switching diodes D3-D4/D6-D7 (BA244s) are used at the input and output of the amplifier itself to shunt excessive RF whenever the transmitter is activated.

When the transmitter is activated, the RF signal is coupled to the sensing circuit by C1 (1 pF). Again, fast-switching diodes, D1/D2, prevent excessive RF voltage appearing here. The RF is rectified by a germanium diode, D5, and the resultant dc turns transistor Q1 on. Capacitor C7 (100 uF) discharges quickly through R4 and Q1, thus turning the Darlington transistor Q2 off and relays, RLA, RLB and RLC de-energise.

In the de-energised state the coaxial relays switch the transmitter straight through to the antenna while relay RLC removes the 5 V supply to the GaAsFET.

When the transmitter is turned off, transistor Q1 will turn off also, allowing C7 to charge slowly via R3 (100k) and R4 (100 ohms). When C7 has charged sufficiently, transistor Q2 will turn on again, thus energising the relays. The delay in turning on is provided to prevent relay 'chatter' when using SSB or CW modes. The delay may be shortened if desired by reducing the value of R3 (100k).

Some operators may prefer to use hard switching in lieu of RF switching. This can be accomplished by ommitting C1, D1, D2, C2 etc, and connecting the switching voltage (usually 12 V via a suitable resistor to the base of Q1. It would be wise to retain C4 (1n), and also feed the switching voltage into the enclosure via a suitable feedthrough capacitor.

The unit is powered from an external 12 V dc (nominal) supply and consumes about 200 mA in receive mode. If extremely long runs of cable are used, it would be advisable to check that the supply is not below 12 V at the amplifier or the 12 V coaxial relays may not switch reliably

It is important to remember that the dc return (-ve side of supply) is via the outer braid of the coaxial feedline, from the transceiver to the amplifier, and if a separate supply is used to power the amplifier, a connection should be made between the negative side of the supply and the braid of the feedline. If the same supply is used to power both the amplifier and the transceiver this will probably be unnecessary as the coax outer braid connection of the transceiver will usually be common to the negative supply.

World Radio History

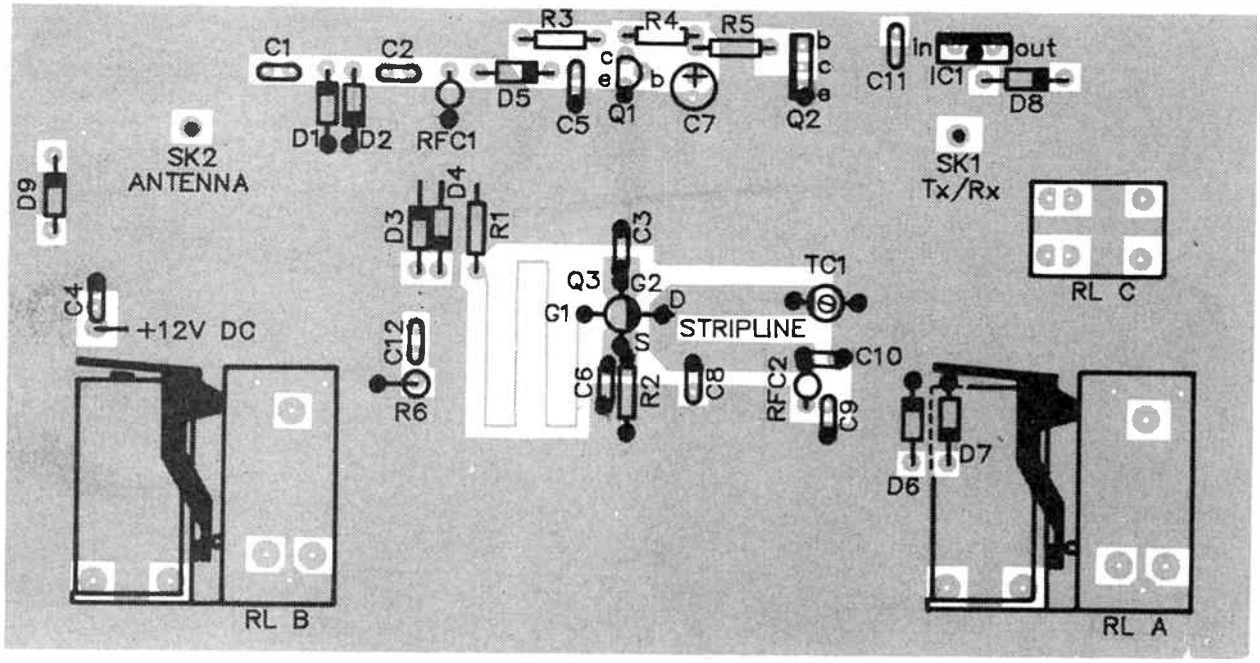

Component overlay. A double-sided pc board is employed, only the topside copper area is shown here, for clarity. Note that diode D7 is obscured by the coaxial relay RLA.

● SOLDER LEADS TO THE TOP OF THE PC BOARD

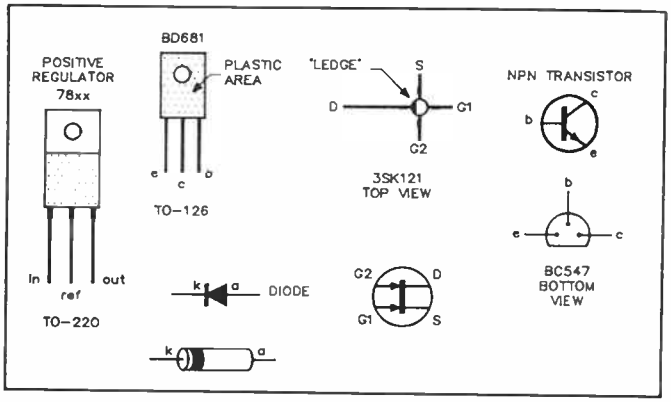

wrong to assume that this is essentially the noise figure of your system.

At 420 MHz, RG213 has a loss of about 1.6 dB per 10 m (4.8 dB per 100 ft). So, for the 15 m (50 ft) of feeder you would have to *add* 2.4 db to your noise figure, i.e: it would be effectively greater than 3 dB — not too bad, but not what you would expect when you think about your low-noise preamp.

Suppose you were using RG58A instead (worse than wet string at UHF), with a loss of 3.46 dB/10 m (10.4 db/100 ft). This would result in an effective noise figure in excess of 6 db.

The answer, of course, is to put the preamplifier at the other end of the feedline (i.e: at the antenna) then, provided the amplifier has more gain than the feeder has loss, the noise figure of the system will be largely determined by that of the amplifier.

Another misconception with preamplifiers is "the more gain they have the better". This is not necessarily true. As can be seen from the above, decreasing the noise figure will give an increase in the signal-to-noise ratio. There is not much point in simply amplifying a signal if you are also amplifying the noise as well, you just get a louder signal and louder noise — no change in the ratio of signal-to-noise. Too much gain can also introduce instability in an otherwise stable receiver.

The amplifier described here has a gain of approximately 13 dB at 438 MHz, which should be more than adequate for most needs.

PARTS LIST
UHF GaAsFET PREAMP

Semiconductors
D1-D4, D6, D7 ..... BA244
D5 ..... OA91
D8, D9 ..... 1N4002
IC1 7805
Q1 ..... DS547, BC547
Q2 ..... BD681
Q3 ..... 3SK121

Resistors all ¼ W
R1 ..... 10k
R2 ..... 180R
R3 ..... 33k
R4 ..... 100R
R5 ..... 1k
R6 ..... 100k

Capacitors
C1 ..... 1p ceramic
C2-C6 ..... 1n ceramic
C7 ..... 220u/16 V electro.
C8 ..... 100p ceramic
C9-C11 ..... 1n "
C12 ..... 100p "
TC1 ..... 2-20p trimmer

Miscellaneous
L1, L2 ..... 10 uH RF choke, L-1773
RLA, RLB ... pc-mount coaxial relays, 12 V coil, Z-7402
RLC .... SPST ultra-mini relay pc-mount 12 V coil, S-7112
SK1, SK2 .. BNC coax sockets

PC board; H2201 diecast box; small grommet; wire, nuts, bolts, etc.

Kit price: $129

Construction

A double-sided, fibreglass substrate printed circuit board is employed. The GaAsFET input and output matching striplines are etched on the board, as can be seen from the accompanying photograph and the component overlay. Because of this, any attempt to construct the amplifier without using this pc board is almost doomed to certain failure.

Construction is quite straightforward. Before assembling the components to the board, check that all the required holes are drilled and that there are no small copper 'bridges' between closely-spaced pads or tracks. This will obviate any problems later. The components can generally be mounted in any order you wish, but it's advisable to leave the GaAs-

World Radio History

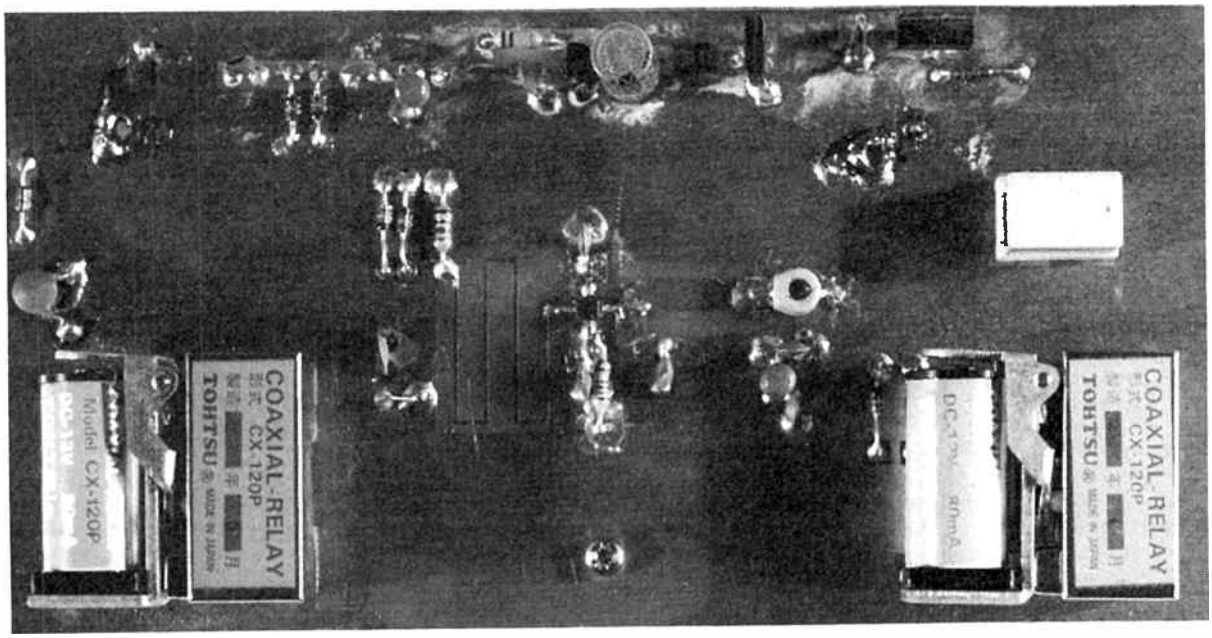

View of the completed preamp.

FET till last. Also, diodes D6 and D7 are best mounted before mounting the coaxial relay RLA, which partially obscures them. As always, care should be taken that the polarised components are all mounted with the correct orientation.

It is essential that the minor components are mounted with the *absolute minimum lead length*, especially the ceramic capacitors C3, C6, C8, C9, C10 and resistor R2. Note that some components are soldered to the top surface tracks or groundplane of the pc board and do not have holes drilled through for all leads. These include Q3, C3, C6, R2, C8, TC1, C10 and RFC2. Also, while the pc board is double-sided, topside and bottomside component pads are not plated-through so, where necessary, components should be soldered on *both* sides of the board. This is especially important where one leg of the component connects to the groundplane on both sides. i.e: Diodes D1 to D4, D5 and D6; RFC1; transistors Q1 and Q1; capacitors C3, C5, C6, C10, C11 and C12 plus the trimmer TC1; resistors R1, R2 and R6; and the 'ref' (centre) leg of the 5 V regulator, IC1.

The usual electrostatic discharge (ESD) safety precautions should be observed when soldering the GaAsFET. i.e: use an iron with an earthed tip, don't use too much or too little heat and don't run around on nylon shag pile carpets beforehand. It will probably be necessary to trim the drain lead of the GaAsFET before soldering. Gently tin the device's leads and the tracks on the pc board to which they mount before soldering it in place. To solder it in position, hold it in place with needle-nosed pliers or a pair of tweezers, making sure it's correctly oriented (see the pinout diagram). Then apply the flat of the iron tip to each lead in turn, applying a little pressure, so that the device's leads are *sweat-soldered* to the tracks.

LEVEL

We expect that constructors of an

INTERMEDIATE

level, between beginners and experienced persons, should be able to successfully complete this project.

The lead to the +12 V supply is attached last of all. It is soldered on the rear (non-component) side of the board, on the pad adjacent to C5 (see the overlay drawing). Use medium or heavy duty hookup wire (preferably with insulation colour-coded red).

As you can see from the lead photograph, the unit is housed in a diecast box. This comes pre-drilled. The pc board is held in place by the two BNC coaxial connectors. Mounting the board to these is the only 'difficult' part of the construction. the two BNC sockets are mounted to the lid of the box, in the holes provided. Solder lugs are mounted under the securing nut and washer on each. About 20 mm of heavy gauge tinned copper wire should be soldered to each lug which needs to be oriented such that the wire can be soldered to the rear (non-component) side groundplane of the pc board adjacent to the pads for the coax sockets' centre conductor pins. The +12 V supply input wire passes through a small grommeted hole in the diecast box lid adjacent to the ANTENNA socket. First tie a knot in it about 20-30 mm from the board to prevent any strain being put on the pc board ▶

A WORD ON GaAsFETS

FET devices employing gallium arsenide (GaAs) first appeared around a decade ago. They are depletion mode field-effect devices, similar to depletion metal oxide silicon (MOS) FETs.

A moderately doped n-channel runs between heavily doped drain and source regions. Without gate-to-source bias, a current will flow from drain to source. If the gate is now made negative, the resultant electric field will force electrons out of the channel, 'depleting' the channel of charge carriers, reducing the drain-source current flow. When a positive voltage is applied to the gate, the channel will be 'enhanced', increasing drain-source current flow.

Single gate types are not as linear as enhancement types, but having two gates on the channel overcomes this. Hence, dual-gate types are widespread. Gallium arsenide is an inherently lower noise, higher speed semiconductor, though devices employing it are generally costlier to manufacture than silicon-based semiconductor devices. However, their cost has dropped considerably in recent times.

Typically, they are employed as low noise amplifiers and mixers in UHF circuit applications. For this reason, they are generally housed in a "macro-X" stripline package as illustrated in the 3SK121 pinout.

World Radio History

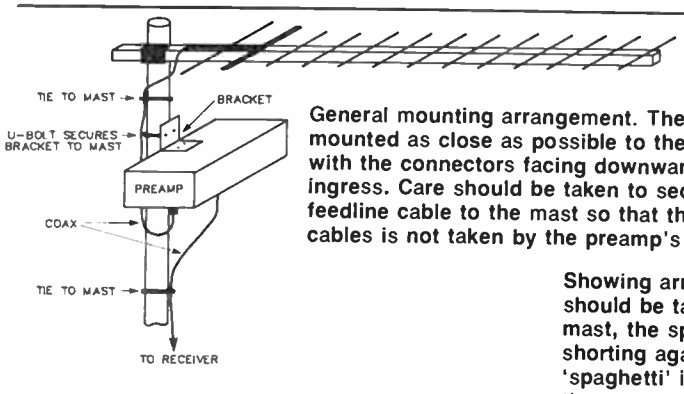

General mounting arrangement. The unit should be mounted as close as possible to the antenna feedpoint with the connectors facing downwards to prevent moisture ingress. Care should be taken to securely strap the coaxial feedline cable to the mast so that the full weight of the cables is not taken by the preamp's coax connectors.

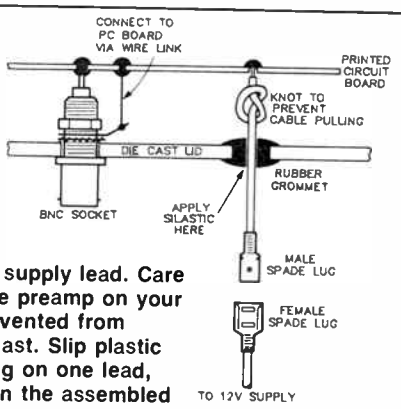

Showing arrangements for the +12 Vdc supply lead. Care should be taken that, when mounting the preamp on your mast, the spade terminals should be prevented from shorting against the case or the metal mast. Slip plastic 'spaghetti' insulation or heatshrink tubing on one lead, then smear petroluem jelly ('Vaseline') on the assembled spade connector before covering it with the spaghetti or heatshrink.

joint whenever the wire is tensioned. The accompanying diagram shows the general arrangement. A small amount of silicone sealant should be applied to the grommet, as indicated, to prevent moisture ingress following installation.

There is not much space between the board and the case lid to solder the two coax sockets, but a fine-tipped iron should manage it. You could heat each socket's centre conductor pin from the component side of the board, applying the solder to the pin and board pad on the opposite (non-component) side. It would be a wise idea to tin the BNC socket centre conductor pins first. Don't forget to solder the wires from the coax socket lugs to the non-component side ground-plane.

Finished? Give everything a thorough visual check.

A mounting bracket, as shown in the accompanying drawings, may be needed to secure the completed unit to your antenna mast, unless you have some other arrangement in mind. This can be bent up from a scrap piece of metal, as shown here, and attached to the box with a pair of large, galvanised bolts and nuts. The bracket should be attached before final assembly.

Initial tests

Test the unit 'on the bench' before attempting to mount it up your antenna mast. Apply +12 V to the supply lead, the supply negative going to the case. Ensure that the relays energise when the supply is connected, and de-energise when it's disconnected.

Attach either a dummy load or an antenna to the ANTENNA socket and your transceiver to the other coax connector. Apply the 12 V supply, energising the three relays. See that the relays de-energise when you key the transmitter.

Alignment

This can be carried out on the test bench, too. There is only one adjustment — this involves trimmer capacitor TC1, which resonates the GaAsFET's drain circuit. How you do the alignment depends on the test equipment you have at your command. Ideally, an automatic noise factor analyser should be used (expensive and rare). Failing that, excellent results were obtained with the prototypes by the simple expedient of aligning TC1 for best signal strength reading on an S-meter

STRIPLINE

A 'stripline' consists of a thin conducting strip spaced from a 'groundplane' by a layer of dielectric material, as the figure here shows. Microstrip can be understood by either an evolution of the coaxial line or a modification of a parallel wire line. Propagation down the line, in the case of a single uniform dielectric and a lossless conductor, is via the transverse electromagnetic (TEM) mode. In this mode the electric and magnetic fields are at right angles to each other and at 90° to the direction of transmission. However, in a practical stripline the field lines are not entirely contained within the substrate, generally occupying a region of the groundplane approximately three times the strip width for large width:height ratios.

Striplines came about from the development of printed circuits which sharply accelerated after World War II. In 1949, Robert M. Barrett of the US Air Force Cambridge Research Centre, proposed the adaptation of printed circuit techniques to transmission line applications. Interest accelerated in the early '50s and in the spring of 1952 Sanders Associates, Inc, began investigations into a dual groundplane, solid dielectric form of transmission line called "triplate". Around the same time other investigators were working with different configurations. Airborne Instrument Laboratories developed techniques using air dielectric called "stripline" while ITT introduced a single groundplane, solid dielectric called "microstrip".

By 1955, a wide range of strip and microstrip components had appeared in microwave and UHF applications. Improvements had also been made in line dielectric materials. Early materials such as Teflon, fibreglass and rexolite were complemented with Teflon fibreglass, beryllia, quartz, alumina, sapphire and magnesium titanate.

Development of miniature coaxial connectors and stripline transistor packages that were compatible with the flat nature of strip transmission lines, were major breakthroughs. They permitted low VSWR transitions and easy mechanical construction.

Tri-plate is used extensively in directional couplers and other VHF/UHF circuits were shielding is paramount, while stripline has found application in high power VHF/UHF amplifiers and FM broadcast transmitters.

Microstrip has found applications in matching networks, filters, mixers, frequency counters and solid state amplifiers. It has the advantages of low cost and ease of manufacture, yielding consistent results.

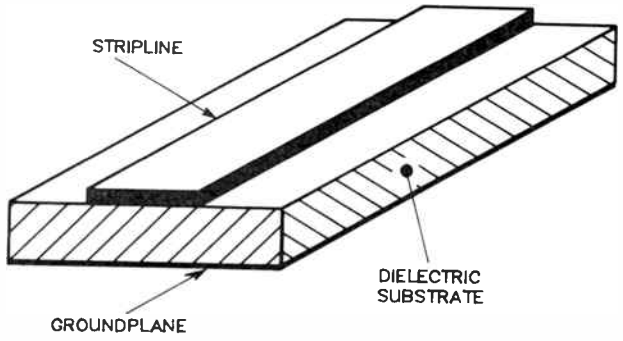

Stripline or microstrip transmission line consists of a thin conductor placed on one side of a dielectric substrate having a groundplane on the other side. The characteristic impedance of such lines is a function of the ratio of the strip width to the dielectric thickness.

World Radio History

while tuned to a weak signal. You can check that this delivers the required signal-to-noise ratio improvement by alternately energising and de-energising the relays.

With the alignment completed to your satisfaction, screw the lid in place, putting silicone sealant around the rim to prevent the ingress of moisture.

Installation and use

The completed and aligned unit should be mounted on the antenna mast and the ANTENNA socket linked to the antenna feedpoint with a short piece of good quality coax. The feedline to the transceiver is then connected to the TRANSCEIVER socket of the unit and a line run from the unit's +12 V lead to the power supply in your shack.

Mount the unit with the connectors facing *downwards* to prevent the ingress of water. If desired, the whole unit, including the coax connectors, can now be painted with a sealant, such as Selley's "Redskin" or similar, to gain an absolutely watertight installation. Smear all the exposed bolts with petroleum jelly ('Vaseline'), or spray them with WD40, to prevent corrosion.

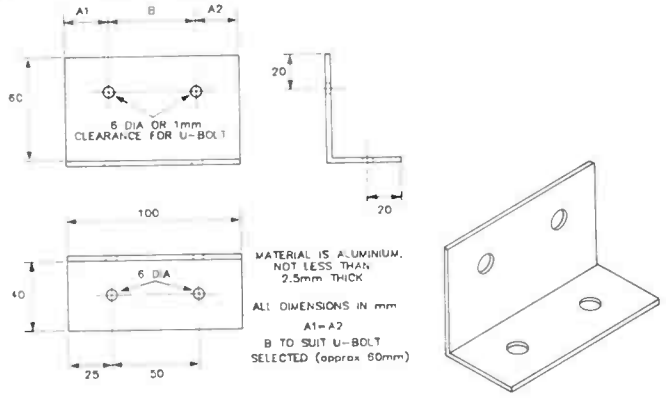

Printed circuit artwork. This is given for reference purposes as it is impractical to make a double-sided pc board such as this and obtain the required critical registration and etched line widths using the methods and techniques generally available to the home hobbyist.

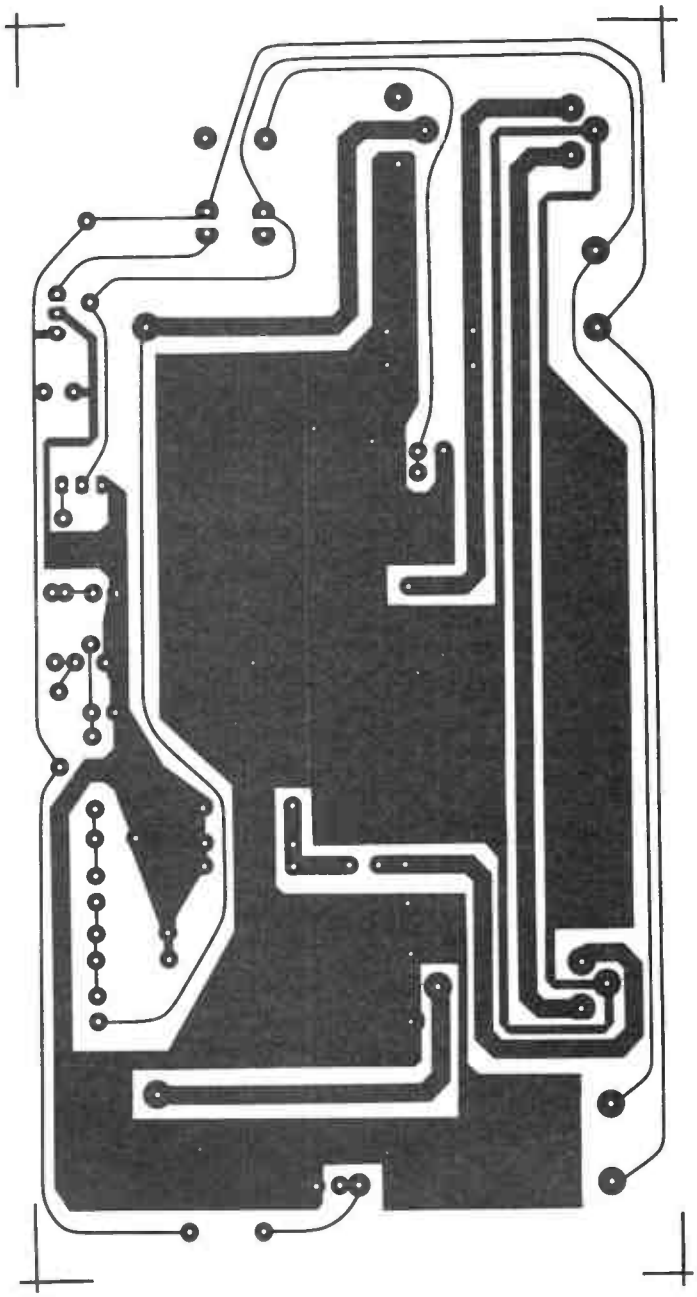

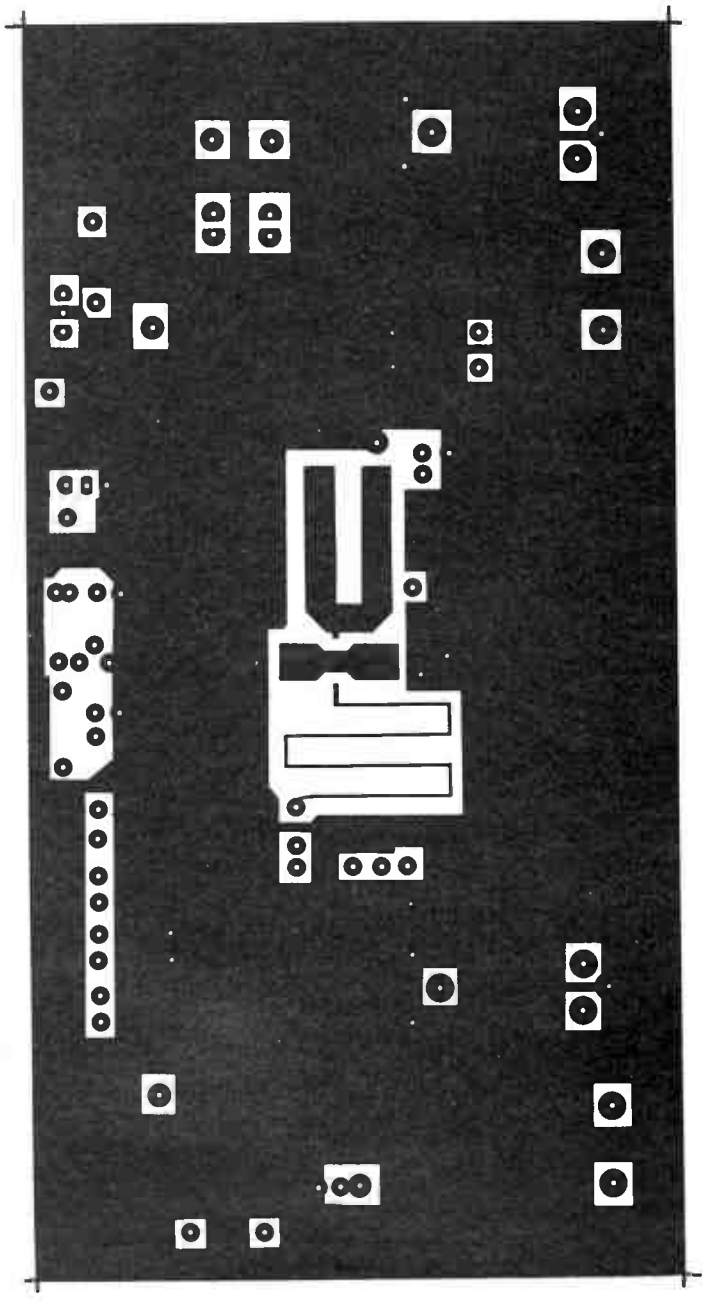

World Radio History

Eagle ELECTRONICS

Pty. Ltd.

EXPERT ADVICE!

(08) 271 2885

STOCKING S.A.'s BEST RANGE OF ADD-ON CARDS FOR THE PC's AND COMPATIBLES!

SCOOP PURCHASE!

SHIELDED AUDIO CABLE

$10 PER 100 M ROLL Normally $35.00

AEM PREAMP $269

AEM 3500 "THE LISTENING POST" ONLY **$37.50**

PULSAR MODEM

A full feature modem, Provides V.21, V.22, V.23 Real Hayes compatability, Auto Dial and Auto Answer

$750 (plus tax if applicable)

SPEECH SYNTHESISER

A cheap computer voice. Connects to any computer with a parallel port.

$39.95

JAYCAR CATALOGUE NOW HERE!

STOCKING THE **JAYCAR** RANGE OF PLUGS, SOCKETS, SEMI-CONDUCTORS, ACCESSORIES & KITS!

MAIL AND PHONE ORDERS WELCOME.

Eagle Electronics Pty. Ltd.
54 Unley Road, Unley, S.A. 5061
TELEPHONE:
(08) 271 2885 ALLOW $10 FREIGHT WITH ORDERS
NORTHERN TERRITORY (089) 27 5899

Master Card VISA

54 UNLEY ROAD, UNLEY

Rockwell

CMOS 6500 NMOS

Execution Time Comparison (μS)

Processor: Clock MHz:	R65C02 R6500/* 2/4	TMS7000 8	Z8 8	8051 12	6805 4	6801 4
1) Binary Add	10	**4**	3	6	26	13
2) BCD Add	11	**6**	12	12	270	22
3) Block Move	826.5	**1112**	1785	3307	2542	4584
4) Table Search	222	**283**	544	326	724	645
5) Binary to BCD	270	**184**	236	229	1321	650
6) BCD to Binary	93.5	**55**	63	46	272	130
7) Bit I/O	115.	**13**	15	10	38	33
Total	**1444.5**	**1657**	**2658**	**3936**	**5194**	**6077**
Relative Performance 2mHz/4mHz	**1.0/2.0**	**0.87**	**0.54**	**0.37**	**0.28**	**0.24**

R6500/1,/11,/12,/13,R6511 R65C02 R65C102

Source: Rockwell International Texas Instruments

- High Performance (CMOS up to 4MHz highest speed 6500 in industry).
- Low cost
- Low power (CMOS 8mW)
- Reliability (Superior CMOS latch up performance).
- Wide range of Peripherals in CMOS, NMOS.

energy CONTROL

73 ERIC STREET, GOODNA Q. 4300
P.O. BOX 6502, GOODNA. Q. 4300 AUSTRALIA
TELEPHONE (07) 288 2455 TELEX AA 43778 ENECON

P.O. Box 12153, Wellington North,
NEW ZEALAND
Phone: 4-726462 Telex: NZ30135

World Radio History

Microbee unveils 68000-based machine

A powerful new 68000-based microcomputer system, dubbed the "Gamma", was unveiled at Microbee System's stand at PC86 (March 12-15), creating a great deal of interest. The product of over two years' intensive R&D effort by Microbee engineers, the Gamma is in fact a multi-tasking, multiprocessor machine featuring two Z80 eight-bit processors in addition to the 16/32-bit 68000 running at 8 MHz.

The Gamma runs 68000 software based on the CPM-68K and UNIX operating systems, using its own locally developed operating system with many UNIX-like features. In addition, it will also feature shortly an optional 16-bit 80186 co-processor card, which will provide the ability to run MS-DOS based software.

If that still isn't enough, it also has the ability to run most CP/M-80 based 8-bit software developed for existing Microbee computers!

As supplied, the Gamma will come with one megabyte of RAM, expandable to 4.0 megabytes on the main board and 8.0 megabytes total. It uses 3.5" double-sided 80-track microfloppy drives, each providing 800 kilobytes of storage.

The machine features high speed 720 x 350 colour graphics, with a palette system providing 16 colours selectable from a range of 4096 different hues.

It also features two high speed serial communications channels capable of both asynchronous and synchronous operation at up to 1 Mbps, together with a parallel printer port.

Operationally, an important feature of the new Microbee Gamma is a separate low profile, ergonomically designed 92-key keyboard with 12 programmable function keys and a numeric keypad. The keyboard has tilting feet and has been fully designed to suit the Gamma and other new generation machines.

Further information is available from **Microbee Systems Limited, Unit 2, Eden Park Estate, 31 Waterloo Road, North Ryde NSW 2113**, or at Microbee Technology Centres in each major city.

Low-cost programmer

A low cost programmer released by Diamond Systems turns your PC or CP/M computer into an EPROM/PROM programmer. The unit is capable of programming all of the EPROMs up to the 27256 32K device. With the addition of personality modules, most of the common 4- and 8-bit fusible link TTL PROMs can also be progammed.

User friendly system software is provided for MSDOS and Z80 CP/M computers. In addition to the normal READ, BLANK, PROGRAM and VERIFY commands, a screen based editor is incorporated and comprehensive disk file I/O is supported, the company says.

The EP232 is a compact, self-contained unit with its own internal power supply. An RS232 interface ensures compatability with any computer.

For more information, contact **Diamond Systems P.O. Box 105, Hurstbridge. 3099 (03) 714 8269.**

New entrant to communications market

A leading European manufacturer of data communications products, the French-based company Sitintel, has announced it is entering the Australian marketplace with its range of equipment designed for digital network interface and/or protocol conversion.

The Sydney-based TCG Group will distribute Sitintel's products through a newly formed division which is to specialise in the communications field. Strongly active in the computer graphics market, TCG will continue to develop its activity in this area while building its strength in new directions, a spokesman for the company said.

Sitintel is currently the leading supplier in the European market for supply of equipment to interface 'black boxes' between X.25 networks and synchronous-transmission computers and terminals.

The product range which TCG will be gradually introducing to the Australian market includes Terpac, which comprises four different products and eight protocols to interface DP lines to X.25 packet switched public data networks. Other products are communication processors, and Sitintel 1200/75 bauds LSI-based modems.

Sitintel has also developed a black box called BBTEX which provides for the interfacing of one or several word processors or personal computers to Teletex services either on the dial-up telephone netowrk or on the X.25 packet network.

Further details from **The TCG Group, 30 Balfour St, Chippendale 2008 NSW. (02) 699 8300.**

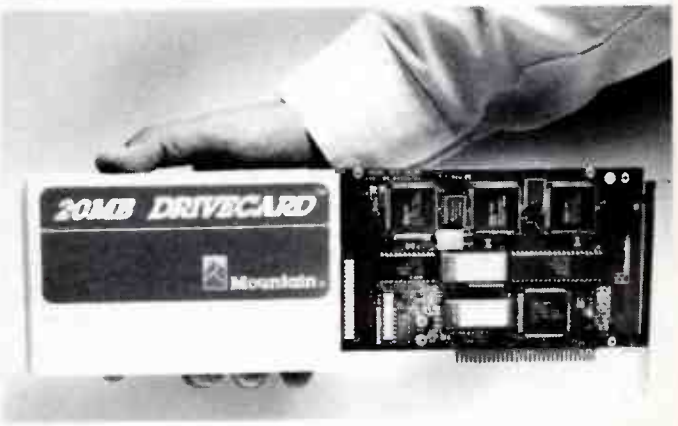

'Hard card' is today's soft option

For all those people who have being wanting to fit a hard disk to their IBM PC or compatible, but have been put off by the hassles, wait no longer. The Mountain Drivecard is a complete hard disk system on a plug-in card for IBM PCs and most compatibles, available from LOGO Computers of Drummoyne, Sydney.

Manufactured by Mountain Computers, the Drivecard provides 20 megabytes of very fast disc storage that you literally just plug in. By using the latest CMOS VLSI gate array technology, Mountain's engineers have produced a hard disk system that is smaller and more efficient than current types. The reduced component count should make it more reliable than existing bulky systems.

The disk controller, which normally takes up a whole card on its own, has been reduced to only 50% of the area, making room for a state-of-the-art 3.5 inch drive. The whole thing fits on one card — no cables or fitting of a drive required.

The drive itself is incredibly rugged, being able to withstand shock up to 60Gs in a non-operating state — it's so rugged, according to Mountain, that you can confidently trust it to regular mail, and that's saying something!

Power consumption of the Drivecard is a mere 14 watts, so it's unlikely to overload the power supply of your PC. And of course the Drivecard is easy to move around. Since there are no cables or connectors, it can be quickly moved from PC to PC. You can take your data with you! It weighs only 1.04 kg.

Warranty on the Drivecard is 12 months, with a mean time to repair of 30 minutes. The card comes complete with a set of utility programmes, including software to divide the drive into multiple logical drives. For further information, contact **Logo Computers, Suite 305, Henry Lawson Business Centre, Birkenhead Point, NSW. (02) 819 6811.**

World Radio History

WELLER CROSSWORD COMPETITION No. 9

SEND IN YOUR ENTRY BY LAST MAIL MAY 26

Our ninth Crossword is a little different. Every answer begins with A. The prize for our lucky winner is a magnificent Weller WTCPN Controlled Output Soldering Station. Post us your answers, even if you've missed one or two clues (so might everyone else). Our crosswords are prepared using 'Crossword Magic' supplied by and available from Edsoft Pty Ltd. 20 Blackburn Rd, Blackburn, Victoria

Winner of Crossword No. 7 (March) was D.X. Tweedle of Evandale S.A.

The answers to last months's crossword are on page 77

CooperTools

A transformer powered soldering station complete with a low voltage temperature controlled soldering pencil. The special Weller closed loop method of controlling maximum tip temperature is employed thereby protecting temperature sensitive components while the grounded tip and non inductive heater protects voltage and current sensitive components. The soldering pencil features stainless steel heater construction, a non burning silicon rubber cord and a large selection of iron plated tips in sizes from 8 mm diameter to 6 mm diameter with a choice of tip temperatures of 315°C (600°F, 370°C (700°F and 430°C (800°F. The transformer case features impact resistant nora'l for durability and protection against accidental damage a quick connect disconnect plug for the soldering iron extra large wiping sponge tip tray to store extra tips plus an improved roll on switch with a long life neon indicator light a non heat sinking soldering pencil holder and a 2 m flexible 3 wire cord

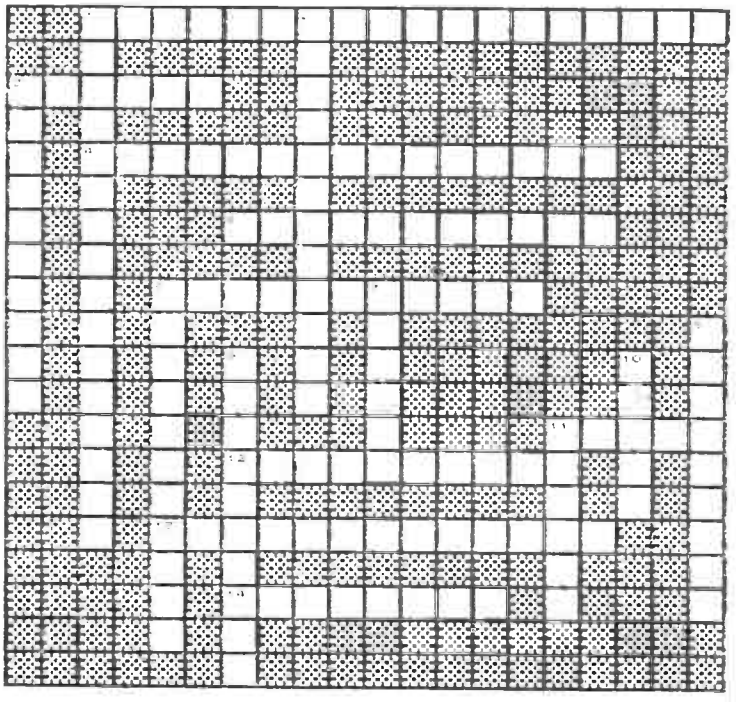

ACROSS

1. A flow of electricity which reaches maximum in one direction, decreases to zero then reverses itself and reaches maximum in the other direction. (2)
3. A unit of electrical current.
4. Items in a circuit which have gain or direct current flow. (2)
5. A type of aircraft antenna.
6. The decrease in amplitude of a signal during its transmission.
11. Electrically connected to a source of potential difference.
12. Time interval between calling data from storage and the instant of complete delivery. (2)
13. Spring-loaded clip with meshing jaws. (2)
14. A bent hexagonal rod used for turning certain types of screws. (2)

DOWN

1. Keys on a standard keyboard. (3)
2. Lacking a regular time relationship.
3. The response of a terminal to remote-control signals.
6. A device which stores a number and which adds a second number on receipt.
7. Short duration radar reflection in the lower atmosphere.
8. Phosphorescence.
9. Leads coming out of the ends and along the axis of a resistor. (2)
10. Adjust the tuned circuits of a receiver.
11. Antenna.

We will accept entries postmarked no later than May 27.

The competition is open to all persons normally resident in Australia or New Zealand, with the exception of members of the staff of Australian Electronics Monthly, the printers, Offset Alpine, and/or associated companies.
The winning entry will be drawn by the Editor, whose decision is final; no correspondence will be entered into regarding the decision.
Winners will be notified by telegram the day the result is declared and the winner's name and contest results published in the next possible issue of the magazine.

Cut out or photocopy the entry form, complete it and send to:

"Weller Crossword"
Australian Electronics Monthly
PO Box 289,
Wahroonga NSW 2076

In case two or more entrants correctly complete the crossword, we'll have to judge who's best at waxing lyrically, in 30 words or less, over: ***"Why I think the Weller WTCPN is the soldering station for me".***

. . . . . .

. . . . . .

. . . . . .

. . . . . .

. . . . . .

Name . . . . . .

Address . . . . . .

. . . . . **Postcode** . . . . . .

World Radio History

Conversions, calculations and pointing the way!

Neil Duncan

Here's a series of 'utility' programs, all bundled into one program, that will find frequent use in the workshop, the ham shack or the classroom.

EVER FUMBLED around a shelf full of 'reference' books to find out how to convert imperial measures to metric's, or 0.001 uF to its nF value etc, only to find the book you want has been borrowed and not returned? Well, here are some handy routines that will find frequent use, I'm sure.

Converting units

It is interesting to hear the 'old' units creeping through on odd occasions!. The cricketers miss a catch by 'several feet'. The used car lots talk about 'miles per gallon'. Here is a way to conveniently convert between these and metric units — plus some other goodies.

I made the decision to gather as many of the conversions between units as I felt to be genuinely useful and to put them with some of my other 'ham shack' utilities, as a computer program. The result has been not only useful, but quite interesting as well.

The program described here will perform the following tricks:

- Convert between commonly used metric and imperial length units.
- Convert between various petrol consumption units.
- Relate Farenheit and Celcius.
- Find the radio beam direction to another part of the world.
- Decode the resistor colour code.
- Convert between various units of capacitance.
- Find the length of a dipole antenna.

The working version of the program is designed for the Apple computer. It wouldn't fit into my VIC-20 and since I do not have a '64 (yet) I have not written a version for that. The amount of effort in converting it for another computer is really quite minimal, however, I imagine it could even appear in the bee-interesting column one day!

Operating the program is quite straightforward. Most of the usual error traps are included, but some extreme misadventures with the keyboard will bring it to its knees I imagine. As much 'user friendliness' as possible has been built in each of the routines is menu-driven and is quite self explanatory. It is worth mentioning that most responses are 'single key-press' but some require the RETURN key to be pressed. The differences are quite logical.

Distance conversion

The following units are catered for — cm, metres, km, inches, feet/inches, yards and miles. Any others within the two systems are readily available from the ones given, and hence were not included.

This routine is called from main-menu level A. The sub-menu invites a keypress for one of those units. After doing that, the computer asks for a numeric value in that unit (and RETURN). You are then given that measurement in *all* of the other units mentioned! This is not world shattering stuff, but surprisingly useful!

Fuel consumption

If I asked you to convert 35 miles per gallon into the corresponding number of 'litres per 100 km', I suspect you might wince a little. I wonder just how many have a rule-of-the-thumb for that conversion? Perhaps this routine is slightly misplaced in the hamshack or electronics environment, but you may find some of the results really useful. The units selected here are as follows:

- miles per gallon
- miles per litre
- km per litre
- litres per mile
- litres per km
- litres per 100 km.

Selecting option B from the main menu will bring you here. By selecting the appropriate unit (i.e: the one corresponding to the units you have in hand), the sub-menu will ask you for a numeric value.

Once again, the response will be the number in the unit you have supplied converted into *all* of the units mentioned. Note that the first three are inversely related to the next three. As your vee-hickle achieves larger and larger figures in the MPG department, it does the reverse in, say, the litres per 100 km unit. Perhaps you don't need a tune-up yet, after all!

There are all sorts of other unit conversions related to petrol which could have been included — how much does the 'old' gallon cost today, for example? I felt that the ones written into the program here are the most useful, however.

Temperature

Hardly a spectacular routine, but (again) useful. You can ask such questions as 'how hot is the old century, in the Celcius scale?' You may select this routine by pressing C from the main menu.

Beam headings

This part of the computer program is (in my case) the most interesting and useful. It is necessary to do some work on the program before it is ready, however. You will notice in line 4010 that there are two numbers -37.45 and -145.14 written into the code. These are the latitude and longitude of *my* location. Unless you are wanting to imitate the VK3AVK shack, I suggest you change them! Looking in a reasonably detailed map or atlas will turn up the latitude and longitude ▶

World Radio History

of your own town. The number of minutes need only be the nearest whole number. The program is not sufficiently accurate to warrant further investigation. The rules by which you enter this (and other data) will be given shortly.

Using this program it is, in essence, possible to construct your own, personalised 'great circle map' based on your own house! None of this stuff where you rely on the map based on another city!

If I wished to point my antenna to Katmandu, for example, I would enter latitude 27 degrees 42 minutes North and longitude 85 degrees 19 minutes East into the program. The response (shown after a brief delay on the screen) would tell me *two* sets of information. For the 'short path' I would have a beam heading (0 — 360 degrees) and a distance of kilometres. For the 'long path' I would have another pair.

There are, after all, two ways to point a radio antenna at another place in the world. The short path to Katmandu is sort of over Australia. The long path is the other way, over New Zealand. Generally, radio conditions vary such that one path is better at some times and the other path at other times. By the way, at the base of the Himalayas, I have read, there is a tribe called the Kyoungtha. The anthropologists studying this tribe have noted 'in the most exciting kiss, the man places his face against the woman's cheek and holds his breath for six seconds, then he smacks his lips together for 20 minutes'. Exciting stuff!

Note that as you approach the antipodal point (the exact opposite side of the Earth from you), the two paths, long and short, have nearly the same length and the path direction becomes indistinct.

In fact, there are two limitations in the mathematics used — the one just mentioned and the fact that a place near you will not compute accurately. Expect some wierd results if you ask for a beam heading and distance to the next suburb.

The conventions for entering data are as follows. Places NORTH of the equator will be entered as positive numbers. Places SOUTH will be negative. Likewise, places WEST of the Greenwich line will be positive and places EAST will be negative.

If you were to enter 85 degrees 19 minutes EAST, you would type -18.19. Yes, as a decimal, despite the fact that the 19 is really a base 60 number. To check that your program is running properly, try all of the following test data, using line 4010 as supplied with the listing. All combinations of + and - data have been used in this test data, hence a thorough workout of the program will take place.

TEST DATA

			Short path		Long path	
Place	latitude	longitude	distance	bearing	distance	bearing
Dublin	53.20	6.15	17228	318	22985	138
Rio de Janeiro	-22.53	43.17	13213	171	27000	351
Durg	21.12	-81.20	9349	304	30863	123
Gluepot	-33.35	-140	662	313	39551	133

If the results difffer significantly, look for the usual typing errors — a zero instead of an 'oh', a one instead of an I and (given the mass of the things used) an error in bracket usage.

Resistors

Well, having progressed this far, I felt it would be worthwhile to include the resistor colour code. OK, you probably know the code well enough. Yet, it is still possible that some of the colours are obscure, believe it or not!

The standard system has been used. To make matters simple, I have not included the colour code for % tolerance, the fourth stripe. If you have just paid for the resistors, you will probably have a fair idea of the tolerance anyway — one gets what one pays for these days! Anyway, I applied the enough-is-enough rule. You know the sort of thing — 'the more you run over a dead cat, the flatter it gets'.

Capacitors

Here is where the story really starts. Now, I am a person who cannot adapt to change very well. I still use words like 'bloke' rather than 'guy'. Why, oh why, must a 1000 puff capacitor be anything else than a 1000 puff or perhaps a '.001'? What is this 'n' system?

You see, there was the time recently when I purchased some parts for a project and for the life of me, I could not find a 10n capacitor. Perhaps if I had used the program first I would have found what was really required! But then that would lead to the need for a portable computer when I go shopping.

If the people in the capacitor factories really wanted it called 10n, then why didn't they stamp that on the side? Actually, some of the systems for marking the capacitors I have seen drift even further from reality. They use the letter K as a multiplier etc. Then there is a colour code for the tiny fellas' which are too small to be printed upon. Perhaps such systems should have been included in the program!

Conversion to other computers

As mentioned, the program is not one which requires much effort with respect to conversion to other computers. Here are some of the 'hot spots' in the listing which may help.

The 'control-g' statement in lines 2060, 4030, 4060, 7010 and 8220 produce a beep on the Apple speaker. You could either omit these or convert them to another system.

The *carat*, or upside-down v, symbol in line 5110 is the Apple symbol for raising to a power. The statements MID$ (line 8150), LEFT$ (line 6240) and RIGHT$ (line 6240) relate to string manipulation and may vary. CALL -868 (lines 6040, 6060 and 8230) performs the function of clearing from the current cursor position to the end of line.

There are three ways of getting keyboard information on the Apple. The INPUT statement is as usual although "INPUT" X will input X without the usual '?' prompt. The GET command (lines 8020 and 8210) obtains a single keypress without the need for a RETURN press, but (unlike the Commodore) empties the keyboard buffer. Finally PEEK (-16384) obtains the ASCII value of a keypress + 128 and does not clear the keyboard unless POKE -16368, 0 is issued (lines 8130 and 8140). If the PEEK returns less than 128, no keypress was given.

The greatest conversion difficulty for some machines may be the HTAB and VTAB commands which relate to absolute cursor position on the screen. They are not used within a PRINT statement. The TAB statement is however, common to most machines.

I hope someone out there enjoys and finds useful the conversion program as much as I do! It is the sort of program I drag out from time to time to do some checking up which would be rather dull otherwise!

The Program

```
10  REM  CONVERT!
20  GOSUB 8240
30  GOSUB 8030:Q = 4:U = 8: FOR I = 1 TO U: GOSUB 8180
40  ON I GOTO 50,60,70,80,90,100,110,120
50  PRINT "DISTANCES": GOTO 130
60  PRINT "FUEL CONSUMPTION": GOTO 130
70  PRINT "TEMPERATURE": GOTO 130
80  PRINT "BEAM HEADINGS": GOTO 130
90  PRINT "RESISTORS": GOTO 130
100  PRINT "CAPACITORS": GOTO 130
110  PRINT "ANTENNAS": GOTO 130
120  PRINT "EXIT"
130  NEXT I:Y = 22: GOSUB 8200: IF A$ =  CHR$ (27) THEN 10
140  ON ( ASC (A$) - 64) GOSUB 1000,2000,3000,4000,5000,6000,7000,160
150  GOTO 30
160  HOME : END
```


World Radio History

```
1000  REM  DISTANCES
1010  GOSUB 8040:B$(1) = "CM":B$(2) = "METRES":B$(3) = "KM":
      B$(4) = "INCHES":B$(5) = "FEET/INCHES":B$(6) = "YARDS":
      B$(7) = "MILES":B$(8) = "EXIT"
1020  X(1) = 1:X(2) = .01:X(3) = 1E - 5:X(4) = .39371:X(5) =
      X(4) / 12:X(6) = X(5) / 3:X(7) = X(6) / 1760
1030  Q = 3:U = 8: GOSUB 8120: IF A$ =  CHR$ (27) OR
      A$ = "H" THEN  RETURN
1040  F = 0: GOSUB 8040:Y = 10: IF B = 5 THEN  GOSUB 8230:
      PRINT "FEET?";: GOSUB 8130:X =  VAL (A$): GOSUB 8230:
      PRINT "INCHES?";: GOSUB 8130:X = X +  VAL (A$) / 12:
      A$ =  STR$ (X): GOTO 1060
1050  GOSUB 8230: PRINT "HOW MANY ";B$(B);"?";: GOSUB 8130:
      IF F = 2 THEN  RETURN
1060  Q = 3:U = 8: IF F = 1 THEN  PRINT "control-G": GOTO 1000
1070  C =  VAL (A$) / X(B): GOSUB 8040: FOR I = 1 TO 7:
      X(I) = X(I) * C: GOSUB 8180: PRINT B$(I);" = ";
1080  IF I = 5 THEN E =  INT (X(I)): PRINT E;"/";
      INT ((X(I) - E) * 1200) / 100: GOTO 1100
1090  PRINT X(I)
1100  NEXT I: GOSUB 8020: GOTO 1000
1110  END

2000  REM FUEL!
2010  GOSUB 8050:B$(1) = "MILES PER GALLON":B$(2) =
      "MILES PER LITRE":B$(3) = "KM PER LITRE"
2020  X(1) = 1:X(2) = 1 / 4.5435:X(3) = X(2) * 1.6093:X(4) = 1:
      X(5) = 1 / 1.6093:X(6) = X(5) * 100
2030  B$(4) = "LITRES PER MILE":B$(5) = "LITRES PER KM":B$(6) =
      "LITRES PER 100 KM":B$(7) = "EXIT"
2040  Q = 3:U = 7: GOSUB 8120: IF A$ =  CHR$ (27) OR A$ = "H"
      THEN  RETURN
2050  GOSUB 8050:Y = 10: GOSUB 8230: PRINT "HOW MANY ";B$(B);"?";:
      GOSUB 8130: IF F = 2 THEN  RETURN
2060  IF F = 1 THEN  PRINT "control-G": GOTO 2000
2070  C =  VAL (A$) / X(B): IF B > 3 THEN 2090
2080  FOR I = 1 TO 3:X(I) = C * X(I): NEXT I:X(4) = 1 / X(2):
      X(5) = 1 / X(3):X(6) = X(5) * 100: GOTO 2100
2090  FOR I = 4 TO 6:X(I) = C * X(I): NEXT I:X(2) = 1 / X(4):
      X(3) = 1 / X(5):X(1) = X(2) * 4.5435
2100  GOSUB 8050: FOR I = 1 TO 6: GOSUB 8180: PRINT B$(I);" = ";
      INT (X(I) * 100 + .5) / 100: NEXT I
2110  GOSUB 8020: IF A$ <  > CHR$ (27) THEN 2000
2120  RETURN

3000  REM  TEMPERATURE
3010  B$(1) = "CELCIUS":B$(2) = "FARENHEIT":B$(3) = "EXIT"
3020  GOSUB 8060:Q = 8:U = 3: GOSUB 8120: IF A$ =  CHR$ (27)
      OR A$ = "C" THEN  RETURN
3030  GOSUB 8060:Y = 10: GOSUB 8230: PRINT "TEMP. IN ";
      B$(B);"?";: GOSUB 8130: IF F = 2 THEN  RETURN
3040  IF B = 1 THEN B = 2:X = 9 / 5 *  VAL (A$) + 32: GOTO 3060
3050  B = 1:X = ( VAL (A$) - 32) * 5 / 9
3060  X =  INT (X * 1000 + .5) / 1000
3070  Y = 12: GOSUB 8230: PRINT B$(B);" = ";X: GOSUB 8020:
      IF A$ <  > CHR$ (27) THEN 3000

4000  REM  BEAM HEADINGS
4010  WHERE(1,1) =  - 37.45:WHERE(1,2) =  - 145.14
4020  GOSUB 8070: PRINT "INFORMATION ABOUT REMOTE LOCATION...":
      PRINT : PRINT  TAB( 14);"OR ESC(APE)"
4030  Y = 10: GOSUB 8230:F = 0: PRINT "LATITUDE (DEGREES.MINUTES)?";:
      GOSUB 8130: IF F = 1 THEN  PRINT "control-G": GOTO 4030
4040  IF F = 2 THEN  RETURN
4050  WHERE(2,1) =  VAL (A$)
4060  Y = 10: GOSUB 8230:F = 0: PRINT "LONGITUDE (DEGREES.MINUTES)?";:
      GOSUB 8130: IF F = 1 THEN  PRINT "control-G": GOTO 4060
4070  IF F = 2 THEN  RETURN
4080  WHERE(2,2) =  VAL (A$)
4090  FOR I = 1 TO 2: FOR J = 1 TO 2:X =  INT ( ABS (WHERE(I,J))):
      Y =  ABS (WHERE(I,J)) - X: GOSUB 4260:WHERE(I,J) = X: NEXT J:
      NEXT I : IF F = 1 THEN 4000
4100  A =  SIN (WHERE(1,1)) *  SIN (WHERE(2,1)) +  COS (WHERE(1,1))
      *  COS (WHERE(2,1)) *  COS (WHERE(2,2) - WHERE(1,2))
4110  A =  SQR (1 - A * A) / A:C =  ATN (A): IF A < 0 THEN C = PI + C
4120  SMALL = 6370.15 * C:BIG = 40212.38 - SMALL
4130  D = ( SIN (WHERE(2,1)) -  SIN (WHERE(1,1)) *  COS (C)) /
      ( SIN (C) *  COS (WHERE(1,1)))
4140  IF  ABS (D) > .9999 THEN D =  SGN (D) * .9999
4150  E =  SQR (1 - D * D) / D:D =  ATN (E): IF E < 0 THEN D = PI + D
4160  IF  SIN (WHERE(2,2) - WHERE(1,2)) >  = 0 THEN D = PI * 2 - D
4170  IF D < 0 THEN D = PI + D
4180  D =  INT (D * 180 / PI + .5):B = D + 180: IF B > 360 THEN
      B = B - 360
4190  GOSUB 8070: PRINT "PATH"; TAB( 9);"DISTANCE (KM)";
      TAB( 23);"BEARING (DEGREES)"
4200  FOR I = 1 TO 39: PRINT "-";: NEXT I: PRINT
4210  A$ = "SHORT":B$ = "LONG": IF D < B THEN B$ = "SHORT":A$ = "LONG"
4220  PRINT A$; TAB( 9); INT (SMALL + .5); TAB( 30);D
4230  PRINT B$; TAB( 9); INT (BIG + .5); TAB( 30);B
4240  GOSUB 8020: IF A$ <  > CHR$ (27) THEN 4000
4250  RETURN
4260  F = 0: IF  ABS (X) > 360 OR  ABS (Y) > .60 THEN F = 1: GOTO 4280
4270  X = (X +  SGN (X) * Y / .6) * PI / 180 *  SGN (WHERE(I,J)): RETURN
4280  GOSUB 8070: PRINT "BAD DATA": GOSUB 8020: RETURN

5000  REM  RESISTORS
5010  F = 0
5020  GOSUB 8080:A$(1) = "BLACK":A$(2) = "BROWN":A$(3) = "RED":
      A$(4) = "ORANGE":A$(5) = "YELLOW"
5030  A$(6) = "GREEN":A$(7) = "BLUE":A$(8) = "PURPLE":A$(9) =
      "GREY":A$(10) = "WHITE"
5040  IF F <  > 0 THEN  RETURN
5050  PRINT "FIRST COLOR (FURTHEST FROM CENTRE)?"
5060  GOSUB 5140:U = 10: GOSUB 8200: GOSUB 8080: IF F <  > 0 THEN 5020
5070  E = 0: GOSUB 5150: PRINT "SECOND COLOUR?": GOSUB 5140: GOSUB 8200:
      GOSUB 8080: IF F <  > 0 THEN 5020
5080  A$(9) = "GOLD":A$(10) = "SILVER"
5090  GOSUB 5150: PRINT "THIRD COLOUR?": GOSUB 5140: GOSUB 8200:
      GOSUB 8080: IF F <  > 0 THEN 5020
5100  IF D > 7 THEN D = 7 - D
5110  E = E * 10 ^ D: GOSUB 8080: VTAB (10): PRINT
      "RESISTOR VALUE IS ";E;" OHMS...": GOSUB 8020: IF A$ <  >
      CHR$ (27) THEN 5000
5120  RETURN
5140  FOR I = 1 TO 10: VTAB (7 + I): HTAB (10): PRINT "("; CHR$ (64 + I);
      ") ";A$(I): NEXT I: RETURN
5150  E = E * 10 + D: RETURN

6000  REM  CAPACITORS
6010  GOSUB 8090:B$(1) = "PF":B$(2) = "'P'":B$(3) = "MFD":
      B$(4) = "'NF'":B$(5) = "EXIT"
6020  Q = 3:U = 5: GOSUB 8120: IF A$ =  CHR$ (27) OR A$ = "E"
      THEN  RETURN
6030  GOSUB 8090:Y = 10: IF B = 1 THEN  GOSUB 8230: PRINT "PF ?";:
      GOSUB 8130:X(1) =  VAL (A$)
6040  IF B = 2 THEN  GOSUB 8230: PRINT "BEFORE THE 'P' ?";:
      GOSUB 8130:X =  VAL (A$): GOSUB 8230: PRINT "AFTER THE 'P' ?";:
      CALL  - 868: GOSUB 8130:X(1) = X +  VAL (A$) / 10
6050  IF B = 3 THEN  GOSUB 8230: PRINT "MFD ?";: GOSUB 8130:X(1) =
      VAL (A$) * 1E6
6060  IF B = 4 THEN  GOSUB 8230: PRINT "BEFORE THE 'N' ?";:
      GOSUB 8130:X =  VAL (A$): GOSUB 8230: PRINT "AFTER THE 'N' ?";:
      CALL  - 868: GOSUB 8130:X(1) = (X +  VAL (A$) / 10) * 1000
6070  C$(1) =  STR$ (X(1)):X =  INT (X(1)):C$(2) = "": IF X > 0 THEN
      C$(2) =  STR$ (X)
6080  X = X(1) - X:C$(2) = C$(2) + "P": IF X = 0 THEN 6100
6090  C$(2) = C$(2) +  STR$ ( INT (X * 10 + .5))
6100  REM
6110  X = X(1) / 1E6:C$(3) =  STR$ (X): IF X(1) >  = 10000 THEN 6150
6120  IF X(1) >  = 9900 THEN C$(3) = ".01": GOTO 6150
6130  X =  INT (X * 1E4 + .5): IF X < 10 THEN C$(3) = "": GOTO 6150
6140  C$(3) = ".00" +  STR$ (X):A$ = C$(3): GOSUB 6240:C$(3) = A$
6150  X(1) = X(1) / 1000: IF X(1) < 1 THEN C$(4) = ""
6160  IF X(1) < .1 THEN C$(4) = "": GOTO 6200
6170  C$(4) =  STR$ (X(1)):X =  INT (X(1)):C$(4) = "": IF X > 0 THEN
      C$(4) =  STR$ (X)
6180  X = X(1) - X:C$(4) = C$(4) + "N": IF X < .01 THEN 6200
6190  C$(4) = C$(4) +  STR$ ( INT (X * 100 + .5))
6200  Q = 7: GOSUB 8090: FOR I = 1 TO 4: GOSUB 8180: PRINT B$(I);
      " = ";C$(I): NEXT I
6210  GOSUB 8020: IF A$ <  > CHR$ (27) THEN 6000
6220  RETURN
6240  IF  RIGHT$ (A$,1) = "0" THEN A$ =  LEFT$ (A$, LEN (A$) - 1)
6250  RETURN

7000  REM  ANTENNAS
7010  GOSUB 8100: VTAB (12): PRINT "OR PRESS ESC(APE)": VTAB (10):
      PRINT "FREQUENCY IN MHZ?";: GOSUB 8130: IF F = 2 THEN  RETURN
7020  IF F = 1 THEN  PRINT "control-G": GOTO 7000
7030  E =  VAL (A$): IF E = 0 THEN F = 1: GOTO 7020
7040  GOSUB 8100: VTAB (10): PRINT "AT ";E;"MHZ, A PRACTICAL HALF WAVE"
7050  PRINT : PRINT "DIPOLE IS "; INT (14300 / E) / 100;" METRES LONG."
7060  GOSUB 8020: IF A$ <  > CHR$ (27) THEN 7000
7070  RETURN

8000  REM  COMMON ROUTINES
8010  REM  PRESS ANY KEY
8020  VTAB (23): HTAB (23): PRINT "PRESS ANY KEY ";: GET A$: RETURN
8030  A$ = "MAIN MENU":X = 15: GOSUB 8110: RETURN
8040  A$ = "DISTANCES":X = 15: GOSUB 8110: RETURN
8050  A$ = "FUEL CONSUMPTION":X = 12: GOSUB 8110: RETURN
8060  A$ = "TEMPERATURE":X = 14: GOSUB 8110: RETURN

8070  A$ = "BEAM HEADINGS":X = 14: GOSUB 8110: RETURN
8080  A$ = "RESISTORS":X = 14: GOSUB 8110: RETURN
8090  A$ = "CAPACITORS":X = 14: GOSUB 8110: RETURN
8100  A$ = "ANTENNAS":X = 14: GOSUB 8110: RETURN
8110  HOME : TEXT : VTAB (1): HTAB (X): INVERSE : PRINT A$: NORMAL
      : VTAB (5): RETURN
8120  FOR I = 1 TO U: GOSUB 8180: PRINT B$(I): NEXT I:Y = 21:
      GOSUB 8200:B =  ASC (A$) - 64: RETURN
8130  F = 0: IF  PEEK ( - 16384) < 128 THEN 8130
8140  IF  PEEK ( - 16384) = 155 THEN F = 2: POKE  - 16368,0: RETURN
8150  INPUT "";A$: FOR I = 1 TO  LEN (A$):B$ =  MID$ (A$,I,1):
      IF B$ = "-" OR B$ = "." THEN 8170
8160  IF B$ < "0" OR B$ > "9" THEN F = 1
8170  NEXT I: RETURN
8180  VTAB (Q + 2 * I): HTAB (10): PRINT "("; CHR$ (64 + I);") ";: RETURN
8190  VTAB (19): HTAB (1): RETURN
8200  VTAB (Y): HTAB (5):F = 0
8210  PRINT "CHOOSE A-"; CHR$ (64 + U);: GET A$: IF A$ =  CHR$ (27)
      THEN F = 1: RETURN
8220  IF A$ < "A" OR A$ >  CHR$ (64 + U) THEN  PRINT "control-G": GOTO 8200
8230  VTAB (Y): HTAB (5): CALL  - 868: IF  LEN (A$) > 0 THEN
      D =  ASC (A$) - 65
8235  RETURN
8240  REM  SETUP
8250  DIM WHERE(2,2),A$(10)
8260  PI = 3.1415926
8270  RETURN
```


World Radio History

The Multitech 'Popular 500'

Just another clone riding the IBM bandwaggon? Well, yes. But Dick Smith Electronics offer a few 'sweeteners' (or is it sauce?) you mightn't get elsewhere.

THE MULTITECH Corporation is one of Taiwan's largest and most prestigious electronics manufacturers. They are one of the leading Taiwanese firms who are doing much these days to dispel the stigma that *Made in Taiwan* once had.

Multitech has been designing and manufacturing computers for some years now, so they're not newcomers to the game. They weren't one of the first companies to design an IBM compatible/clone, preferring to 'hang back' and let the early birds make the mistakes and wait for market trends to emerge. In the final analysis, it was probably a wise move as is evident from the physical and electronic design of the Popular 500 which they launched last year.

Dick Smith Electronics were quick to obtain the local distribution rights for the Popular 500, and they launched the machine in Australia late last year once their quality assurance team had put samples 'through the mill' and pronounced them passable. (We'll spare you the gruesome description of these tests, which would likely make Clint Eastwood wince).

Configurations

The Popular 500 comprises a system box which holds the central processor unit (CPU) and disk drives, plus an 84-key keyboard incorporating a numeric keypad and 10 function keys. A real-time clock/calendar with battery backup is included. A video monitor, either monochrome or hi-res colour according to requirements, has to be purchased as an extra. You can buy the Popular 500 in three pre-configured versions, with differing RAM and disk drive configurations.

System 1, at the lowest price, features a single 5.25" 360K floppy disk drive and 256K (originally, only 128K) of RAM and three months warranty.

System 2 incorporates two 360K floppies, 256K of RAM, MicroPro's *Easy* wordprocessing package and six months on-site service.

Top of the line is System 3 which comes with one 512K (a half-meg) of RAM, 360K floppy drive, a 10M hard disk and the *Aura* integrated package from Softrend of the USA. A six month on-site service agreement is also included, and DSE will install this one free of charge.

The disk operating system supplied is MS-DOS 2.11. The video board supplied is an IBM compatible colour graphics unit featuring 640x200 (mono) and 320x200 (four colour) pixels graphics resolution and 16-colour text mode. Video output is RGB. You get one IBM expansion slot internally with Systems 1 and 2, but this is taken up by the hard disk in System 3. Prices for the three configurations start at $1395 for the System 1, then $1995 for System 2 and $3995 for System 3. Prices include tax.

Multitech supply two quite good quality paperback books with the machines, a *User's Guide* and a reproduction of Microsoft's MS-DOS User's Guide.

For the review, we selected System 3 because this configuration parallels that of the IBM PC-XT we use here at the magazine. A DSE hi-res colour monitor (RGB input) was supplied with the review equipment.

Through the mill

In deciding on our review 'philosophy,' we thought it best to examine the machine more as a 'technical tool' than as a 'business system.' You can read legions of such reviews any day of the week, but, as we considered that you would have more of an interest from the former standpoint, we gave the machine a real caning over a period of months with a variety of technical software packages, as well as a few of the more familiar business applications.

Accordingly, we used the widely known and popular CAD pc board and draughting applications *Smartwork* and *AutoCAD* over quite a lengthy period. The latter is best operated with a graphics tablet and keyboard, rather than through keyboard commands alone, but our Popular 500 was not set up for this facility.

In addition, we ran *Lotus 1-2-3* with *Sidekick*, as well as the old-standard *Wordstar*. Alright, if you must know — we admit to playing *Flight Simulator*. We can confidently report that operators have more stalls and crashes within one hour after two black Swans or one can of Guinness. Moral — oh well, you've heard it all before.

For our own interest, we also spent a little time number crunching with the odd privately obtained computer-aided electronic design packages, written for the IBM PC.

Two things were highlighted by all this. Firstly, we found the keyboard somewhat 'light' and 'spongy' in general, while the larger keys — *enter*, *shift*, *crtl* and the *space* bar — tend to rattle somewhat. However, we might point out that such problems are not the sole province of this machine's keyboard, we've found plenty around with the self-same characteristics. The 'real thing' was preferred.

Secondly, we came across a number of minor (depending on how such things affect

World Radio History

you) incompatibilies. In some programs, control keys appeared inoperative, but on experimentation, we found the equivalent function was performed by some other control key combination. This indicates that the keyboard scanning routine in the BIOS (basic input/output system) is different to that expected by the application, which leads us to believe there's a difference here between the Popular 500's resident firmware (software in ROM on the CPU card) and that of the IBM PC.

While it created no major difficulties with the applications we tried on the machine, it should not be assumed such will always be the case. Moral — check out your application on the hardware before committing yourself. As always, remember the old latin expression, *caveat emptor* — which, freely translated, means "don't go into a cave unless it's empty!"

So far as the styling and construction are concerned, the Popular 500 gives a muted conservative impression with its clean lines and three-shades-of-tan colouring. The system box's 'footprint' (area it occupies on a desk) is substantially smaller than the IBM and, indeed, many other clones and compatibles.

This has been achieved through cunning packaging of the internal circuitry. It has no system board as such, all this being mounted on IBM-compatible 'expansion' cards, mounted horizontally in the cabinet plugged into what can best be described as a 'slot board.' This has four slots. One takes the CPU card, another takes the multi-function card and a third the colour graphics adaptor. In Systems 1 and 2, the fourth is unoccupied, but in ours, this is taken up by the hard disk interface.

Thus, if you're considering loading up a machine with additional cards, you might be caught short. However, we understood DSE's backroom boys are working on a slot expansion scheme. Keep watching the news pages.

We note that only a colour graphics card is offered. If you only require monochrome, you'll just have to take the video card supplied and shop elsewhere for a monochrome board. This didn't worry us, but it's doubtless a consideration for some.

The DSE colour monitor supplied we found generally adequate, but money spent on a high quality hi-res colour monitor would never be wasted, particularly if you are considering using the CAD packages mentioned earlier.

While on the subject of hardware, we note the lack of a hardware reset switch. You have to power-down and power-up again; an annoyance on those occasions when the old three-key reset won't work following some system hangup.

Support

On-site service is available in the major capitals. Now, as it happened, we had occasion to call in the DSE service department, not because the Multitech broke down, and not for a "just testing" exercise, but because the machine's internal drive DIP-switches were incorrectly configured when despatched to us.

A simple call to the service department had a young lady out within the hour who not only fixed the problem promptly but gave us a rundown on a few of the features and functions of which we were not aware. Impressive!

Documentation

The documentation is better than fair. Multitech's User's Guide was typeset on a daisywheel printer, which seems fairly common practice, and they've taken some pains with the layout and organisation to make it easy to use — which it is. The illustrations are all line drawings and clearly done. The MS-DOS manual is similar.

The Multitech book usefully includes comprehensive interface pin assignments and details on interconnect cables. The latter is essential for the RS232C connector as they've used a DB9 plug for this interface. In addition, *really useful* mechanical details are included — like precisely how to get the case apart and the insertion of expansion cards.

To summarise

A neat package for which you could confidently plonk down your money, walk away with it, plug in, switch on and run — providing you've checked-out if it will run the applications you have in mind (or in hand!). But that's a caution that applies to any machine.

The Popular 500 offers value for money from a variety of viewpoints. If you don't require, or envision requiring, the facility for a half dozen expansion cards, the one spare slot limitation is of no concern.

What *is* of concern is the support. With the confidence of experience, we can say it's on the ball (a welcome change from a year or two ago . . . congratulations). And we do know what happens when the expected or required support is lacking . . .

All in all, the Popular 500 is quite a functional package that represents good value for money, backed by an organisation that seems on the ball, an important consideration in this industry.

Roger Harrison,
David & Anthony Tilbrook

Review equipment supplied by Dick Smith Electronics, Cnr Lane Cove & Waterloo Rds (PO Box 321), North Ryde 2113. (02) 888 3200.

THE ANSWERS TO WELLER CROSSWORD COMPETITION NO. 8

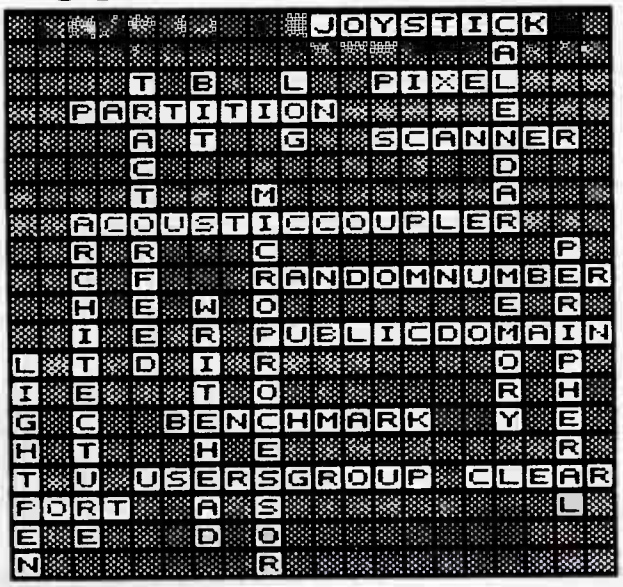

AUTHOR! AUTHOR!

So you've written this *great* article.

Tell us all about it then!

Maybe you've developed a project you think others might be interested in?

We'd like to hear from you!

Perhaps you'd just like to write in and comment on the magazine, tell us what you think of it and what you'd like to see us doing.

We're only too happy to hear from you!

(All bouquets gratefully accepted, brickbats next door, please!)

Write to:

Roger Harrison
Australian Electronics Monthly
PO Box 289
WAHROONGA 2076 NSW

World Radio History

The strange world of EDASM

"YER PROGRAM WON'T WORK!" How many times have I heard that over the phone, in letters, in person? Well, my friends, the programs you see in AEM (at least mine . . .) do in fact work; otherwise they wouldn't be in the magazine.What doesn't work, in most cases, is the version of the program typed in by the reader.

BASIC programs generally are a piece of cake to type in; the language is fairly tolerant of how you set your lines out and you can usually put spaces in or delete them as you see fit. But for machine code programs, you normally use the Microbee's Editor/Assembler package, or "EDASM" as it's usually known.

EDASM has been around for a long time, in fact it was the first optional ROM package to be offered with the early kit Microbees. (Wordbee came quite a bit later). EDASM is still available for ROM computers, and it's bundled as part of the software supplied with disk Microbees. But it seems the majority of 'Bee owners never touch EDASM; that is, until they see a program in AEM and decide to type it in. In many cases it's their first encounter with EDASM, and in many cases it is disastrous. So here are some "home truths" about the Microbee's EDASM.

Read the book!

The first bit of advice is "*read the EDASM instruction booklet*". If for some reason you don't have the book, try to get it from Microbee systems. The book has "Cat. No. 250.00" written on the front. Try to read and understand the book, and then type in the little example program "skywriter" in the back. Once you get this little program going, you should be proficient at using EDASM. Then again, if you're not really into machine code, you may find it a little confusing. So we'll try to clarify a few points.

First, the name: *Editor/Assembler*. What is it? EDASM is, in fact, two separate programs which we will now look at individually. The *Editor* is simply a text editor, much like Wordbee or Wordstar or one of the other word processors. But where most modern text editors let you scoot all over the page inserting, deleting or changing this or that, the EDASM editor is a "line editor"; you can work on the contents of only one line at a time. Each line has a number, and you must tell the program which line you want to attack before you are allowed to do any editing on it.

This might sound a bit primitive, and it is. But I used the EDASM editor during the pre-Wordbee days to write many magazine articles. It didn't have all the flashy features such as automatic paragraph formatting and automatic justification, but it still beat the old manual typewriter! You could add new lines and delete lines, and the finished article (the FILE) could be saved onto a cassette, or sent to a printer with the line numbers stripped off. At the time it all looked very professional, even though the printer was an old Teletype machine. Ah, those were the days . . . now it's all Wordstar and daisy wheels. (What daisy wheel? — Ed).

The point of all this is to show that what comes out of the EDASM Editor is a document, a text file, pure and simple. It is just words and numbers. Even if the words and numbers are typed in from a program listing in AEM, the editor file IS NOT A PROGRAM! It is only a text file that describes a program, and it WILL NOT RUN as it stands. This is probably the biggest single source of confusion among new EDASM users.

Edit first, assemble afterwards

Once you have typed in an EDASM file from a magazine article or whatever, you then must save it on cassette or disk (to prevent tears in case of later crashes) and then you must ask the computer to *ASSEMBLE* it. What happens is this: The computer works its way through the editor file, line by line, and tries to intrepret each line into a machine code instruction. It looks through its library of instructions it knows, and if it finds something that matches what you've typed in, it places a MACHINE CODE INSTRUCTION in a special area of memory. They are laid on one after another, and they become the actual PROGRAM when the assembly is finished. If the assembler can't find the instruction you asked for, it signals an error.

Take special note of this: ***the area of memory in which the program is assembled is completely different from the area containing the editor file you typed in.*** The editor file is unchanged by the assembly operation; that is, unless you've asked the assembler to place the machine code in the editor

LISTING 1

```
ADDR    CODE    LINE    LABEL   MNEM    OPERAND
                00100 ;This routine prints a line of "#'s" on the screen.
                00110
0400            00120           DEFR    16
0400            00130           ORG     0400
0400  3E23       00140           LD      A,'#'
0402  0640       00150           LD      B,40      ;THIS IS 64 IN DECIMAL.
0404  CD4280     00160 AGAIN     CALL    8042      ;THE "PRINT TO SCREEN" ROUTINE.
0407  10FB       00170           DJNZ    AGAIN     ;KEEP GOING FOR ENTIRE LINE.
0409  C9         00180           RET
                00190
0000            00200           END
00000 Total errors

AGAIN   0404
```


World Radio History

file's memory area. Then you've got a real mess on your hands! This is one reason we saved the editor file to tape or disk before attempting an assembly. I learned this lesson the hard way!

Some terminology now: If the editor file you type in is to be used as a source of information for the assembler to generate a program from, it is called the "source file" or "source code". The machine code instructions that are generated as a result of your source file are called the "*object code*".

A real program

Let us now examine the little program listing in *Listing 1*. The program described therein does nothing more than print a row of #'s across the screen. We've kept the program simple so we can concentrate on how EDASM handles it.

The listing is typical of those published in magazines. It is the result of assembling a source file and running a printer at the same time, so it shows *both the source code and the object code*. This may be another cause of confusion, because there are two ways you can tackle the job of getting this program into your computer. You can enter the source code, or the object code, *but not both!*

If you are prepared to accept the program as is, and you don't want to modify it, you can ignore the source code and enter the object code only. To do this you must use the machine code "*MONITOR*" program. If you've got a ROM-based Microbee, it's just about dead certain you've got a monitor. There's one tacked on the end of the EDASM package itself, there's one tacked on to Wordbee, and there's one in the Network ROM. Take your choice, they're all similar. I've got a 'Bee that actually has all three versions of Monitor in the same computer.

You'll find instructions for using Monitor in the books that go with the above software packages. The information you are to enter into the computer is contained in the first two columns of the listing, under ADDR and CODE. You use the monitor to examine an address, in this case 0400 (hexidecimal). You then command the monitor to alter that address, and those that follow until you hit <ESCAPE>. Then you simply type "3E 23 06 40 CD 42 80 10 FB C9" from the CODE column. The address increments automatically. When the code is typed in you use the monitor to save to cassette the memory area from 0400 to 0409 (hex). Specify file type "M" to show that it is a machine code file. That's it, you're done.

If you are using a disk-based Microbee, you will have a CP/M program such as "DDT" which provides the same functions as the monitor to directly enter machine code. Be sure to follow its instructions, and be sure the program you are interested in is written for the disk-based Microbee. The program given is Listing 1 is for ROM-based 'Bees only, and it won't run in a disk Microbee.

If you want to have a go at modifying some magazine program listing for your own purposes, you can type in the source code, ignoring the object code. First get the Editor going in its "insert" mode, at which time it will display a line number such as "100". You look at the listing and enter the text *after* the line number. The line numbers will be supplied for you automatically, incrementing each time you hit return. When all the source code is entered, you can tell the computer to *assemble* it for you. Next use the monitor to save the object code to cassette, as before.

The beauty of using source code is that you can use the editor to modify it as your heart desires, re-assembling and testing it after each change. Recently I have seem some of my own programs circulating through the user groups and bulletin boards in modified forms. Unfortunately a common change is to scrub out the author's name and replace it with another, leaving everything else pretty well intact!

Let us now work our way through Listing 1, pointing out any pitfalls. First, the column labels along the top: we've already mentioned ADDR, CODE, and LINE. The next ones, LABEL, MNEM, and OPERAND, are the three "fields" of the information that actually gets assembled. Each field must have the right kind of information on it, and it must be separated from the other fields by one space or one *TAB character*.

Listing 2 looks a mess, but it produces exactly the same object code as Listing 1. The only difference is that the fields have been separated by spaces instead of tabs. Now, (here comes a catch), assume you have typed in the source code so it looks like Listing 2, and you would prefer it to look nice and pretty like Listing 1. If you edit-in more spaces to make the columns line up, your attempt at assembly will be flooded by error messges. The reason? . . . the assembler sees two spaces together as skipping across two fields. It becomes thoroughly confused. So if you want nice even columns as in Listing 1, you must use ***one TAB character only*** between each column.

The above does not apply in one special case: when there is a semicolon on the line, as in line 100, the assembler ignores everything after it. This is the way you leave comments in your source file, and they can have any number of spaces ▶

LISTING 2

```
ADDR    CODE    LINE    LABEL   MNEM    OPERAND

                00100 ;This routine prints a line of "#'s" on the screen.
                00110
0400            00120   DEFR 16
0400            00130   ORG 0400
0400 3E23       00140   LD A,'#'
0402 0640       00150   LD B,40 ;THIS IS 64 IN DECIMAL.
0404 CD4280     00160 AGAIN CALL 8042 ;THE "PRINT TO SCREEN" ROUTINE.
0407 10FB       00170   DJNZ AGAIN ;KEEP GOING FOR ENTIRE LINE.
0409 C9         00180   RET
                00190
0000            00200   END
00000 Total errors

 AGAIN   0404
```


World Radio History

in them. Also, characters between single quotes (not double quotes) are taken as text data by the assembler, so spaces can be freely used to space out messages in the finished program.

Line 110 is a blank line, put in to look pretty in the listing. It is ignored by the assembler.

Line 120 is a COMMAND to the assembler, it does not become part of the object code. DEFR 16 tells the assembler to treat any numbers from now on as hexadecimal (radix 16). If this command is left out, the assembler will assume everything is decimal. However, I prefer to work in hex, so *THERE!*

The next line contains another assembler command, ORG 0400. This tells the assembler to start laying the object code down at 0400 hex. This is really the default address for EDASM, at least in its ROM-based version, so the assembler could get by without the command. But it doesn't hurt to put it in for clarity. You'll notice that "0400" keeps popping up in the address column, but there is no object CODE yet, as the first two lines were just assembler commands.

Line 140 finally gets down to the nitty-gritty. This is a legitimate instruction to load the character "#" into the microprocessor's A register. It results in two bytes of machine code, 3E and 23. Note that the # was between *single* quotes. Just going back to line 100 for a minute, note that there are double quotes around the "#" and they also enclose a single quote, or apostrophe. This should drive the assembler mad. But it doesn't, because the whole line starts with a semi-colon, and the assembler ignores it.

The line 150 instruction loads the B register with 40 (hex). The B register will be used to count how many times a "#" has been sent to the screen. There is a comment line to tell us this is really 64 in decimal. (Just the width of the 'Bee's screen . . . how convenient!)

Line 160 is a subroutine call to a routine within the 'Bee's BASIC ROM which prints one character from the A register onto the screen. Line 170 is a special instruction to decrement the B register, and if it is not zero, jump back to the label called AGAIN. We previously set up the B register so this would happen 64 times.

Line 180 is a subroutine RETURN instruction. This means our entire little program is in reality a subroutine. The assembler has a direct command in it to allow you to run the object code you have just assembled. If the code is written as a subroutine it returns control to the EDASM package. This makes it easy to alternately change and test little bits of program.

The last instruction is (wait for it . . .) END! This is another assembler command that generates no code, but tells the assembler that it has finished its daunting task and can now go back to sleep.

When assembly is finished, you will be given a count of the total errors encountered during assembly. This is really a count of how many things the assembler didn't understand. If you are lucky the count will be zero, but you will notice the counter has five digits to allow for the very best quality disasters.

This is by no means a complete course in the operation of EDASM. It may help you avoid a few bungles, but for guaranteed success you MUST have access to the full instruction manual. If you didn't get one with your 'Bee, COMPLAIN, but get one. It's the only way you'll learn the many commands and codes to make the EDASM package do its tricks. It will certainly be worth your while, and once you're properly hooked on writing machine code, *it will be a rare day when you touch BASIC again!*

Attention! microbee users and admirers

ONLINE – A GREAT MONTHLY INFORMATION PACKAGE

For only $25.00 per year, you can join the thousands of microbee owners who have found the way of keeping up to date and in tune with their microbee. Subscribers to Online, the microbee journal, are privy to the latest hardware and software releases, are entertained by a myriad of applications and are tutored in the latest languages.
Don't let your microbee rest! Put it through its paces with Online — your monthly upgrade kit in a magazine.

ONLY $25 YEARLY

microbee computer

Online

SUBSCRIBE NOW!

YES! Please enter my subscription, as marked, to Online for one year (12 issues) at a cost of $25.00.

Name:_____

Address:_____

Town/Suburb:_____ State:_____ P/code:_____

METHOD OF PAYMENT: ☐ Money Order/Cheque
☐ Please charge my

☐☐☐☐ ☐☐☐☐☐☐ ☐☐☐☐☐☐

Expiry Date:_____ Signature:_____

- *Unless otherwise stated, your subscription will commence from the next issue to be published upon receipt of this form.*
- *Single copy price $2.95 plus 30 cents p&h per issue within Australia.*
- *All subscriptions and enquiries should be addressed to: The Subscription Officer, Online, P.O. Box 41, West Gosford 2250.*

MBS 012/EM/MAY

World Radio History

Apple Turnover

If you've moved from an Apple to an IBM compatible at some time in the past, you've probably got a pile of old Apple-format disks that you couldn't bring yourself to throw out. J. Nathan Cohen has some suggestions as to what to do with them.

J. Nathan Cohen

APPLE TURNOVER is a software/hardware package which fits most IBM compatible computers and allows you to read, format and write to or from your IBM disks, Apple DOS and Apple CP/M disks using IBM format disk drives. It consists of a series of IBM-compatible programs and a plug-in card that goes between the disk drive and the rest of the computer.

The end of the disk drive cable that used to plug into the controller card plugs into the Turnover card, and another ribbon cable (supplied) goes from the Turnover to the controller.

First tries

Around a year ago now, I decided that the days of my old Apple II+ were numbered, so I bought myself a Compaq, which was later supplemented with a Taiwanese IBM clone (its father was an IBM and its mother was Chinese). If only this review had come along a year ago, instead of my having to go through the excruciating process of printing all of the important files from the Apple, then rekey-boarding the *really* important ones into the Compaq!

That's going to be the main use for Apple Turnover — people who have no other method of getting their files off an old Apple and onto an IBM format. I don't think that there will be many instances where Apple/IBM conversions are needed on a day to day basis; which is just as well, as you will find out later in this review!

I first fitted the Apple Turnover to my IBM clone (because opening a Compaq is like performing open-heart surgery on an armadillo!), but it didn't work. When I tried to format a disk in an Apple format, I got a message telling me that either the disk or drive was faulty. There's a section in the Turnover documentation about 'marginal' disk drives (ones that work fine when doing the job they're designed to do, but won't work with the Turnover) that says basically that if this happens it's your fault — but it doesn't tell you what to do about it. If I'd just bought a Turnover I'd be trifle disappointed, to say the least.

However, all was not lost. I took the Turnover out of my clone and fitted it in the Compaq. This is neither easy nor satisfactory. Just opening a Compaq is bad enough, but to fit the Turnover you have to move all the cards — and when you get it in there's no way to hold it in place, which in a luggable computer could well be a problem.

But at least it did work. The turnover has no effect during the normal operation of the computer, and only comes into play when the special software is fired up.

The package

There are a number of separate .EXE files in the Turnover package. One allows you to format disks in either DOS 3.3 or CP/M format, another lets you read files from Apple to IBM, and a third lets you write IBM files onto an Apple format disk. There is also a utility for converting WordStar files into flat ASCII files, removing CRLF sequences, and other 'cleanups'. Two more .EXE files allow you to add or remove file headers from binary files.

The operation of the software is much more complicated than it needs to be, to my mind. For some reason, the developers have taken what should a pretty simple set of operations and put such a complex and poorly implemented user interface on it that makes the whole things seem like hard work.

For example, when I first tried to copy a file from Apple to IBM, I got an error message that wasn't on the document "Bad file

— to p. 105 ▶

World Radio History

The world's fastest real-time image processor chip

The Semiconductor Research Laboratory of Matsushita Electric Industrial Co Ltd, the Osaka-based manufacturer of National Panasonic and Technics brands sold in Australia, has developed a real-time image signal processor (RISP) which can process TV signals at what they claim is the world's fastest processing speed of 20 nanoseconds.

The new processor was realised by Matsushita's bipolar LSI technology which integrated 45000 elements on one chip. The processor can be used in intelligent pattern recognition systems such as the image input devices of office equipment, the defect detection mechanisms on production lines and the image-analysing devices used in medical equipment, Matsushita say.

Pictures input by a video camera can be processed through RISP into line drawings, with high contrast or reversed print. Such processed images can then be used in preliminary stages of intelligent pattern recognition. Processing programs can be easily changed too, since the RISP has RAM (random access memory) area.

Various kinds of intelligent pattern recognition systems are currently available. To intelligently process image signals, it is necessary to process original pictures into images that can be recognised in later pattern recognition stages. Matsushita's RISP allows the pictures produced by video cameras to be processed in real time. To realise real-time image processing, Matsushita has introduced a new high speed circuit design architecture which allows, for example, the one-step instruction for division. Conventional architectures, in contrast, requires ten steps.

Matsushita announced the new image processor chip at the International Sold-State Circuits Conference held last February in Anaheim, California.

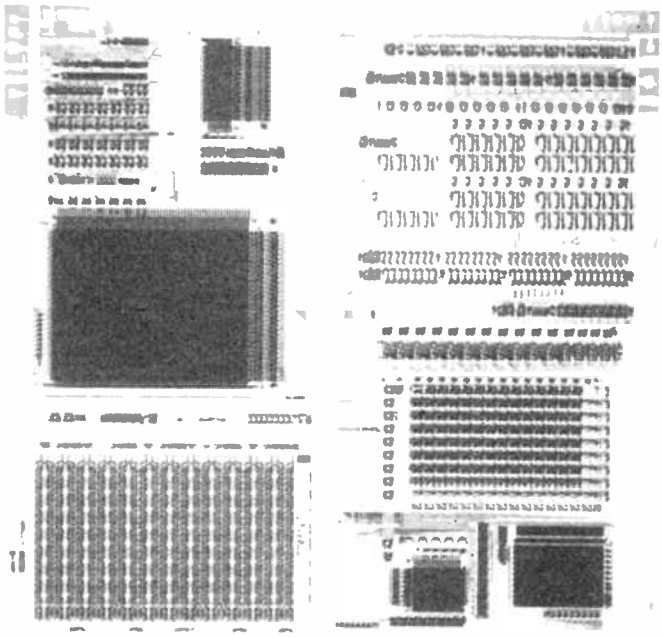

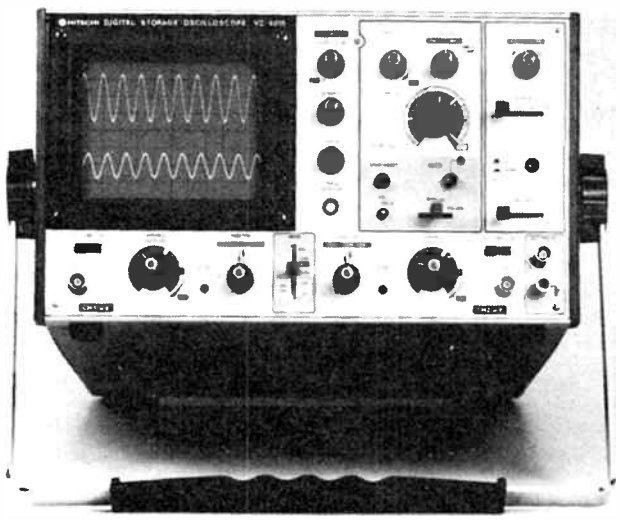

New digital CRO

The Hitachi VC-6015 digital storage oscilloscope can also be used as a conventional 10 MHz dual-trace oscilloscope. Pretriggering allows capture of events before the trigger point. The pretrigger position may be set at 0, 2, 5 or 8 divisions and the trigger point is displayed on the CRT as an intensified point, allowing the user to determine its relationship to the captured waveform.

The free-run mode may be used to continuously observe repeating events, and the display time may be varied between one and five seconds. A 'hold' function maintains one stored waveform while another is captured.

By selecting the conventional hold mode, the waveform stored from channel 1 may be held in memory while that from channel 2 is captured. The 'reverse hold' function is also possible. This allows separate hold of channel 1 and channel 2 waveforms. A recording function enables a pen recorder to be used to create a hard copy of stored waveforms.

For further information, contact **IRH Components, 32 Parramatta Road, Lidcombe 2141 NSW. (02) 648 5455.**

Filter it

Hash from the mains can wreak havoc with your electronics. The application of an 'EMI filter' at the mains input to your gear can elmininate or largely reduce problems caused by mains-borne hash. If you're in the throws of designing something now, then why not design-in an EMI filter?

American Corcom brand EMI filters for in-chassis applications are available from All Electronic Components in Melbourne. Two models are available, designed for use on 3 A loads or 5 A loads.

They're rated for 115/230 V, 50-400 Hz operation and are entirely encapsulated in a grounded metal can with solder lug input/output/ground connections. The 3 A-rated model costs $9.20, while the 5 A-rated model costs $9.50.

Seek them out at **All Electronic Components, 118-122 Lonsdale St, Melbourne 3000 Vic. (03) 662 3606.**

New miniature polyester capacitor

Soanar Electronics now include the Type AMZ miniature polyester capacitor in their comprehensive range of electronic components. Manufactured in Japan by the Nissei Co. Ltd, the AMZ is specifically designed for radial PCB insertion

The stock range includes capacitance values from 4n7 to 470n in 50 volt dcW with 10% tolerance, immediately available from all Soanar interstate branches. Higher voltage and/or close tolerance 5% types are also available, but on an indent basis.

Further details are available from the Soanar Branch in your State ▶

World Radio History

Compact DMMs...

...with real testbench performance

Philips Series 18 DMMs give you a magic combination – no-compromise testbench features and performance, packaged in a choice of three compact, easily portable instruments that are always handy for lab, workshop or field use.

Our range of three models lets you select exactly the functions you need for every application and environment.

PM 2718

min/max, auto data hold, 100 kHz RMS AC, 0.05% DC

PM 2618

electronic calibration, 200 kHz counter, 0.3% bargraph and 10 MHz logic view

PM 2518

RMS AC, direct temperature, dB and relative measurements

Contact your local Philips organisation or:

SYDNEY: Box 119
North Ryde 2113
Tel. (02) 888 8222
(Toll free (008) 22 6661)

MELBOURNE: Locked bag No. 5
Oakleigh South 3167
Tel. (03) 542 3600
(Toll free (008) 33 5295)

PHILIPS

KIKUSUI

Quality Performance Value

COS 5020

- 20MHz
- 2 Channel
- 2 year WARRANTY

Compare the features and you'll see that for our price, they're not worth being without.

1. Fast 20ns/DIV sweep speed — provides the resolution for timing measurements required of a 20MHz scope.
2. Trigger level lock — automatically sets trigger level, if selected, so there's no resetting between measurements.
3. Variable Hold Off — synchronises complex repetitive signals, like the BURST in a video signal.
4. Linear Auto Focus — maintains clear bright signal traces.
5. Sweep modes — AUTO, MANUAL and SINGLE SHOT.

2 QUALITY PROBES $629 ex-tax
10:1, 1:1
INCLUDED $729 inc. tax

GW POWER SUPPLIES

2 NEW SERIES FOR '86

GPR-SERIES

- single output
- 2 analogue panel meters, V-A
- Fine & Coarse Voltage Control
- Fully protected, low noise
- Excellent value

GPR-SERIES

Typical Ranges:

GPR-1810:18V, 1A
GPR-1830:18V, 3A
GPR-3020:30V, 2A

GPR-3030 30V, 3A
GPR-3060 30V, 6A
GPR-6030 60V, 3A

GPD-SERIES

The NEW GPD-series supplies have 2 variable outputs, which can be configured in anyone of 4 operating modes:

GPD-SERIES

- DUAL INDEPENDENT • DUAL TRACKING
- SERIES OPERATION • PARALLEL OPERATION

Typical Ranges:

GPD-1850: 2×18V, 5A or 36V, 5A or 18V, 10A
GPD-3020: 2×30V, 2A or 60V, 2A or 30V, 4A
GPR-3030: 2×30V, 3A or 60V, 3A or 30V, 6A

EMONA INSTRUMENTS

A division of Emona Enterprises Pty Ltd

1st Floor
720 George Street
Sydney, 2000. Phone: (02) 212 4599

World Radio History

AUSTRALIAN ELECTRONICS
Monthly

PC BOARD SERVICE

As a service to our readers, we offer quality pc boards for our projects featuring fibreglass substrate with roll-tin over copper tracks and a silk-screened overlay printed on the component side.

Project	Retail Price
1500 Metronome	$ 4.67
3500 Listening Post	$ 8.06
6500 Universal Mosfet Amp Module	$ 9.69
9500 Beat-triggered Strobe	$ 11.32
6102 2-Way Speaker	$ 21.75
5501 Negative Ion Generator	$ 12.35
4500 Microtrainer	$ 28.47
6510 4-Input Mixer	$ 20.40
6010LL	$ 19.06
6010MA	$ 23.10
6010F	$ 16.37
6010R	$ 16.37
Set of 4	$ 74.90
4501 8 Channel Computer Relay Interface	$ 13.00
6502 Order 6500 and 6501	
8500 Courtesy Light Extender	$ 9.92
4502 Real Time Clock	$ 10.46
4600 Dual-speed modem (no overlay, mods required)	$ 15.00
5502 Microwave Oven Leak Detector	$ 9.12
2500 Sine/Square Audio Generator (add $12 for RA53 thermistor)	$ 9.65
6503 Active Crossover	$ 23.06
4504 Speech Synthesiser	$ 11.53
5503 Bedwetector	$ 9.16
5504 Electromyogram	$ 15.88
3502 Signal-operated Cassette Controller	$ 9.16
2600 Peak RF Power Meter	$ 10.46
5505 Hash Harrier Mains Filter	$ 17.72
4610 Super Modem (includes EPROM)	$139.00

Note: The boards found in this issue are also available, price on application.

Please rush me the following boards

Project No. **Price $**

Allow a minimum of 4 weeks delivery
Price includes postage & packing
New Zealand, add $1.00 to these charges

All cheques or money orders should be made payable to Australian Electronics Monthly

Name .....

Address .....

..... **Postcode** .....

I enclose my cheque/money order for .....

Please tick payment method

Cheque/money order ☐ Bankcard ☐ Visa ☐

Mastercard ☐ American Express ☐

Card No ..... Expiration .....

Signature .....

((Note Unsigned credit card orders cannot be accepted)

You can buy the boards at our offices if you wish, at any time during business hours We're located at WB Building, Cnr Fox Valley Rd and Kiogle St, Wahroonga NSW, the entrance is in Kiogle St

NEW PRODUCTS NEWS

Low-cost mains surge suppression devices

Two solid-state mains surge suppression devices, developed in Britain to protect computers and sensitive electronic equipment from high voltage supply surges (caused, for example, by lighting), are said to be very much smaller and up to 60 per cent cheaper than other protection devices with similar performance capabilities.

The MTL 375 Lightning Protection Unit from the UK-based firm of Measurement Technology Ltd, incorporates a self-resetting solid-state switch, allowing it to withstand continuous overloads up to 300 V without damage, the makers claim. When operational, the unit isolates the signal lines and shunts the fault current to earth for the duration of the surge.

The MTL 377 is a low-cost alternative which arrests most normally occurring surge currents but fails-safe in the event of sustained overload, after which the unit has to be replaced.

The MTL 375 is recommended for use in remote areas since it is capable of absorbing all but the severest surges without maintenance while the MTL 377 is recommended for more accessible sites with many signal lines, says MTL.

Both units are available for working voltages of 7, 16, 32, 55 and 75 V and are packaged as small, lightweight units mounted and earthed on a standard busbar by means of two fixing studs. A range of enclosures is available for up to 22 units, and separate accessories are carried for users wishing to install them in racks or panels.

Contact MTL's Australian representives, **Control Devices Pty. Ltd, 2/25 Chard Road, Brookvale 2100 NSW. (02) 939 1133.**

Cable fault locator

Faults on low voltage cables are usually the most difficult to locate. The new Telefault P240 Low Voltage Cable Fault Locator from C.D.S. Ltd of the UK is having a good deal of success, the distributors say.

Battery operated and portable, the instrument is microprocessor-based and uses the well established pulse-echo technique of fault location. The combination of hardware and software filtering in the Telefault P240 allows it to continue operating normally, without distortion or instability of the displayed traces, even when connected to energised low voltage power cables the makers say.

In addition, the unit can be triggered from an external fault detecting device such as a CT or a 'voltage dip' detector enabling transitory faults to be located.

On typical underground power cables, the Telefault P240 covers cable lengths of up to 3.2 km in five separate ranges. Recalibration for different cable types is simply accomplished, according to the makers.

An LCD graphics panel displays the reflected pulse signals and calibrated cursors are used to measure the distance to the fault. The LCD also displays instrument status and measured fault distance. Error messages are given when comparing two waveforms if the control settings are dissimilar. A viewing angle control ensures that on-screen information remains visible even when in conditions of high ambient light.

For more information, contact **Macey's Electrical Accessories, (02) 807 4739.**

World Radio History

Enlightening notes for Commodore 64 Listening Post operators

Roger Harrison

The AEM3500 Listening Post project has proved extremely popular, with software being made available, to date, for the Microbee, Apple II and Commodore 64 computers (yes, yes – more to come). However, since we published details of using this project in the December '85 issue for Commodore 64 owners, many of whom seem newcomers to the radio communications field. We have frequently been requested for further 'enlightenment' on the software as well as the use and functioning of the project. Here, hopefully, is the enlightenment required.

SOFTWARE to run the Listening Post with the Commodore 64 can be obtained either by typing in one of the listings published in the December '85 issue or by purchasing it on disk or tape through the magazine's software service (see the advertisement elsewhere in this issue). The December issue article also gave details on how to hook up the Listening Post to the Commodore 64.

No matter which source you obtain your software from, when you RUN the program, an initial menu appears, like so:

F **FACSIMILE**
T **RADIOTELETYPE**

Note that Morse code decoding is not available with the C64 software (it's the least used, and there's plenty available both commercial and public domain). As it seems there is some confusion about the operation of these menus, let us go through them, step by step, in detail. It is assumed you have your project hooked up between your receiver and C64.

RTTY operation

So, from the initial menu, you press **T** for radioteletype (RTTY) operation. The RTTY menu will then appear. You can select from four baud rates. Using the function keys (unshifted).

Commercial stations commonly use 50 or 110 bauds, while ▶

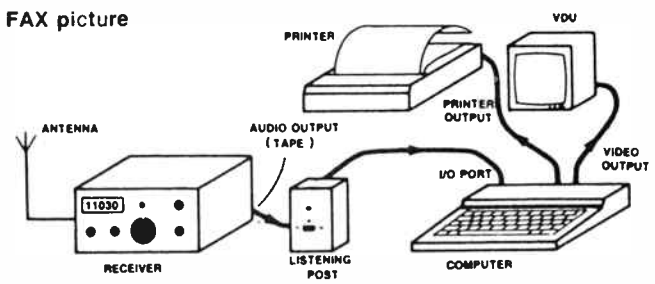

General view of how the Listening Post is set up.

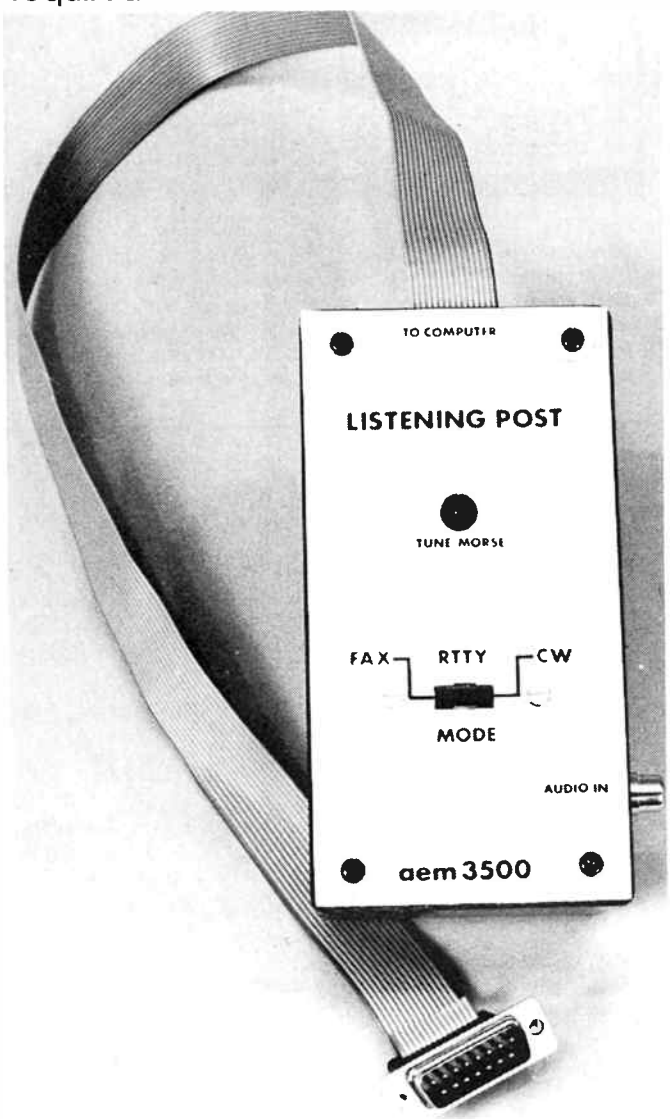

World Radio History

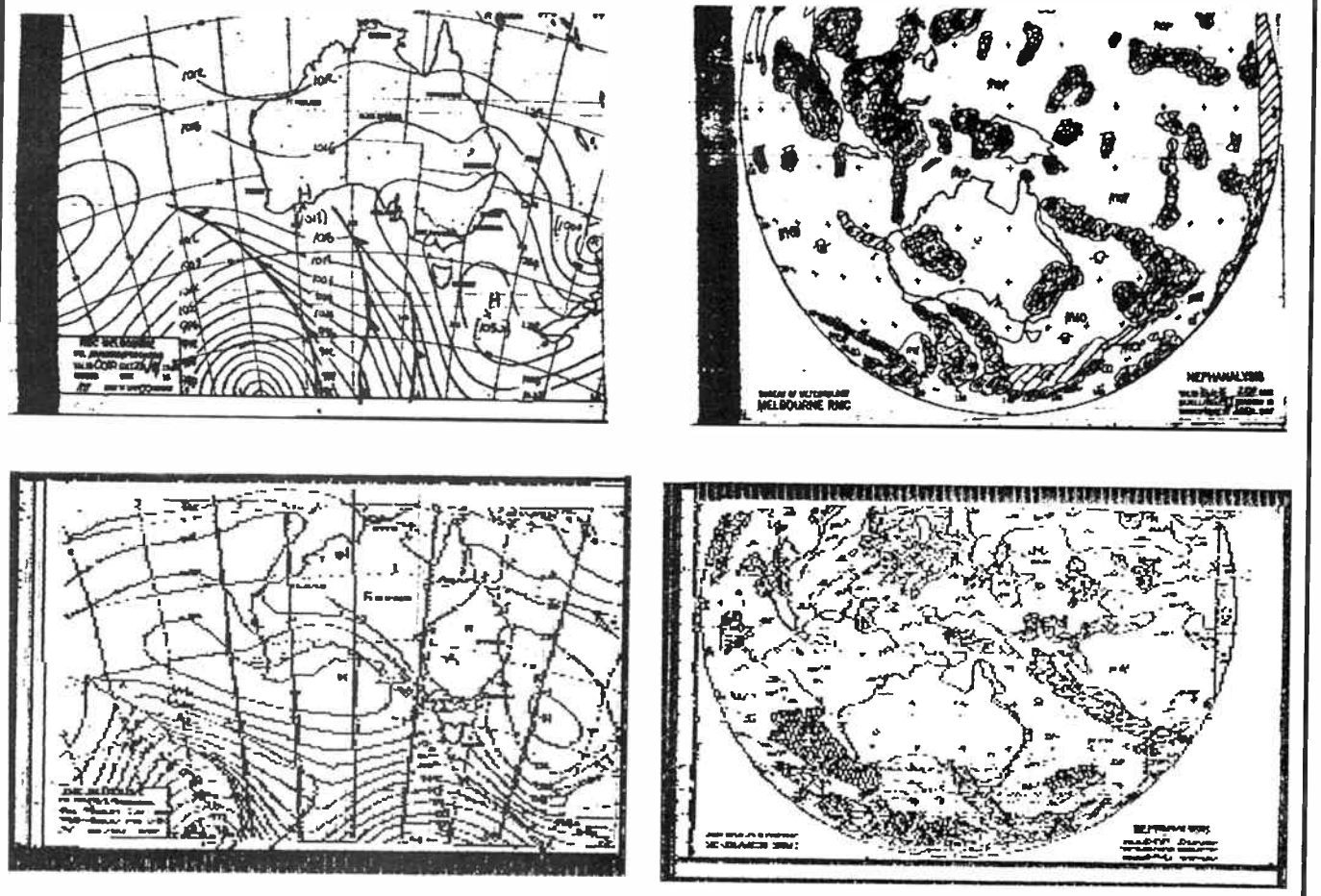

Microbee (upper prints) and Commodore 64 (lower prints) FAX printouts compared. Note that they have been recorded at different times as we don't have any simultaneous recordings to compare. At left are two 'MSL' (mean sea level) isobaric analysis charts reproduced about half size. The latitude/longitude coverage is the same in each. At right we have two 'nephanalysis' (cloud cover) charts, again reproduced about half size. Some slight interference is present in the upper portion of each nephanalysis picture here. The resolution of the C64 FAX pictures is less than the Microbee ones to accommodate the Commodore's limited screen resolution. Note, however, that the broad features are readily discernible.

radio amateurs commonly use 45 bauds. There's plenty of RTTY to be found on the HF amateur bands between 3.5 and 29 MHz and there's a selection of news services sending plain text (see accompanying panel).

With a signal tuned-in, press the required function key and text will start to appear on-screen. If it's garbled, try pressing the **R** key ('REVERSE') or the **N** ('NORMAL') key. If its' still garbled, press **(SHIFT) F8** to return to the menu and try another baud rate selection.

Pressing **F8** at any time will stop current decoding and return you to the menu.

FAX operation

This seems to be the most popular mode. From the initial menu, press **F** and the FAX menu will appear. Now, PRIOR to making your menu selections, tune in a facsimile transmission and then make your menu selections when you hear the "pip-pip-pip-pip" sound that signifies the start of the picture.

You *must* make the menu selections in the following order (which is why the menu is set out in the order it is).

The first two selections are:

L LOAD
S SAVE

If you are trying the FAX mode for the first time, you will want to attempt to save a picture (assuming you'll be successful, but we must be positive and optimistic!). If you have a disk system, place a formatted disk in the disk drive, or a blank cassette in the cassette recorder for cassette systems (you can use your program disk or tape), then press **S**. Note that *nothing happens on the screen.*

The next two selections are:

N NORMAL PICTURE
R REVERSE PICTURE

For the time being, let us assume all is normal, so press **N**. Again, **nothing happens on the screen.**

The next three selections give you keys F3, F5 and F7 to select the picture characteristic, *lines per minute* (L.P.M.), of 60, 120 and 240. The most widely used is 120 L.P.M., so press **F5.**

Once you have completed this sequence, *in that order*, the screen will go black and the computer will commence to write white lines across about three-quarters of the screen, from left to right, starting at the top. Each line is written at about four second intervals. If all is working well, you will start to see the black lines of a FAX picture appear.

World Radio History

If all is not well, all you will see is a white area on-screen with a — every eight lines down the left hand edge. This signifies that the data is not being input from the decoder for some reason (got it connected correctly? Does the LED flash?).

So you've got a picture coming up on-screen. The left hand edge may appear *away* from the left hand side of the screen. You can align it back to the left by pressing the **SHIFT** key repeatedly until it's in position as it 'writes'.

If you select **reverse picture** from the menu, a 'normal' transmission will appear as white lines on a black background. The reverse picture selection is included because some transmissions can be found which send FAX pictures as white on black background. If you decode such a transmission using the 'normal picture' mode, it will appear on-screen (and print) as white on black. For the sake of convenience, you can invert it by selecting R from the menu. Or, if you prefer, 'normal' transmission may be reversed.

Note that the **SAVE** routine is automatic. As you selected S from the menu, the software will commence to save the received picture to disk or cassette after 195 lines have been written (just before the bottom of the screen). It takes about 50 seconds to save a picture to disk, and around six minutes to save it to tape. After the save is completed, press **F1** and you'll return to the initial menu.

To view a saved picture

If you've successfuly saved a FAX picture, you'll want to take a look at it. If you've got a disk system, place the disk in the disk drive. Select **L** at the head of the menu. The disk will start up and the picture will commence to appear on-screen after 50 seconds.

To get back to the menu, press the RUN/STOP RESTORE keys together then, after the screen clears, type **SYS2078** and hit RETURN; the menu will appear. A new formatted disk is required for each SAVE, unless you rename each saved picture. A picture is saved as "DDF".

You can rename the saved picture as follows: At the end of the save sequence, after pressing the RUN/STOP RESTORE keys, type —

OPEN 15, 8, 15: PRINT#15, "R:(FILE NAME REQUIRED)=DDF"

followed by **CLOSE 15,** then type SYS2073 to go back to the menu.

For cassette system operators, place the cassette in your recorder. Select **L** at the head of the menu and immediately press the PLAY button on your recorder.

Some program modifications

Data from the Listening Post decoder can be taken in on Pin H of the user port alone by changing the program as shown here:

```
0940  08 20 5B 09 AD 19 D4 20
0948  15 0A EA CA D0 F3 20 E4

09E8  D0 F7 EA 60 A9 35 8D 04
09F0  DD A9 0F 8D 05 DD 4C 1E
09F8  0A A9 72 8D 04 DD A9 07
0A00  8D 05 DD 4C 1E 0A A9 39
0A08  8D 04 DD A9 05 8D 05 DD
0A10  4C 1E 0A EA EA 0A 0A 0A
0A18  0A 26 FE 60 EA EA 20 44
```

Note that the program supplied through our software service already has this modification installed.

RTTY NEWS BROADCASTS

English transmissions from **Agence France Press (AFP),** may be found from time to time, transmitting from Hong Kong, on 7542.5 and 10 730.6 kHz. The **Central News Agency** in Taiwan may be found on 7695 or 13 563 kHz transmitting in English during the day. **Reuters** may be found transmitting English text on 6845, around 9120, 10 960 and 14 514 kHz. For a different view, try **TASS (Russian news service)** English transmissions during the day on 6870, 6950, 7760, 9110, 10 270, 11 470, 12 085, 13 410, 14 510 and 14 700. **United Press International** might be found on 9985, 16 232.7 and 19 520 kHz. You might also try the **Voice of America** Philippines transmitter (maybe . . .) on 14 526.5 or 19 792.5 late mornings to early afternoon. For a different slant on world events, try the **Xinhua News Agency (People's Republic of China)** around the middle of the day on 7250 and 9491 kHz, and in the afternoons on 11 680, 12 265 and 14 923 kHz; all English transmissions. Don't forget that reliable standby, the **North Korean News Agency KCNA** on 13 780 kHz.

FAX TRANSMISSIONS

Probably the best source of FAX off-air when you're starting out is the Australian Bureau of Meterology's own stations, **AXM** (near Canberra) and **AXI** (near Darwin). Both transmit on a continuous schedule, AXM transmitting FAX for around 50 minutes each hour, RTTY the rest of the time. You'll find **AXM** on 5100 and 11 030 kHz, **AXI** on 7535 and 10 555 kHz. Weather FAX transmissions from **New Zealand** can be found on 13 550 kHz.

On some C64s, particularly earlier ones that may have a slightly different clock crystal, the FAX picture display will slant to the right or left. To correct this, change the program as shown here:

```
0944  AD
0945  01
0946  DD
```

NOTE: To make these changes, you must have either the Commodore ASSEMBLER or MON64 monitor programs, or similar. After modifying the code, save the program using a file name of your choice.

FAX picture resolution

The Commodore 64 has a limited screen resolution in 'hi-res' mode. The program author, Tony Woods VK6ATW, was limited to 320 dots per line and 200 lines on-screen to display a FAX picture. As most FAX transmissions have around 576 lines per picture, some have to be 'lost'. In this system, *only every third line is printed* from the transmitted FAX picture. In addition, Tony Woods only allows 256 bits per line to be printed, which permits the picture to present a circle as a circle, and not an oval shape. Hence, the resolution is not as good as that for the Microbee. However, you do get a picture on-screen, which you can't with the Series I/II/II Microbees (possible with the new Premium Series, but new software is required — Ed.). Note that the print on C64 FAX pictures is not legible, as it is with Microbee FAX prints, but all the broad features are readily discernible. The accompanying illustration compares C64 and Microbee FAX prints.

— to p. 104 ▶

World Radio History

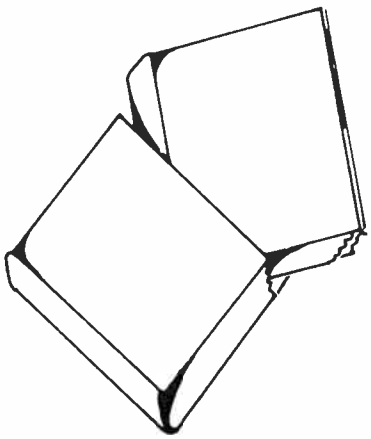

DP Education (Books)

Cnr Fox Valley Rd and Kiogle St
Wahroonga NSW 2076
PO Box 289, Wahroonga NSW 2076
Ph. 487 2700

for electronics and computing BOOKS at all levels

PRINTED CIRCUIT BOARDS: DESIGN AND TECHNOLOGY

Edited by W. Bosshart

Designing of a Printed Circuit Board is in many ways the last step in electronic circuit design in addition to being a major step in the production of Printed Circuit Boards. In this book, the authors have discussed accepted and standard practices in Printed Circuit Board designing, both single and double sided. Detailed illustrations make for easier understanding. The book should be of interest to electrical/electronic engineering students in addition to being of immense use to designers and practising engineers in industry.

Contents — Layout Planning, Layout, General Rules and Parameters, Design Rules for Digital Circuit PCB's, Design Rules for PCB's in High-Frequency and Fast-Pulse Applications, Design Rules for Analog Circuit PCB's in Power Electronics Applications, Design Rules of PCB's in Microwave Applications, Artwork, Automation and Computers in PCB Design, Film Master Production, Properties of Copper-Clad Laminates, Board Cleaning Before Pattern Transfer, Photo printing, Screen printing, Plating, Etching, Mechanical Machining Operations, PCB Technology Trends, Multilayer Boards, Soldering Techniques, Component Assembly Techniques, Guidelines for Starting PCB Facilities, List of Addresses.

250 pp; 1982; $18.95.

VIDEOTEX/TELETEX: PRINCIPLES AND PRACTICES

By Antone Alber

Taking a long, systematic look at the newest and most important element of the information revolution, this timely book examines the vast potential of videotex and teletext to affect the structure of business society. It explores the commercial applications of both systems and spans the entire range of important issues from the technical to the social. It shows the ways in which videotex and teletext lend themselves to electronic banking and shopping, electronic messaging, learning at home, data processing, and game playing. Videotex even makes it possible to read and control utility usage and monitor for fire and burglary Managers in broadcast, computer, print media, and other communications industries will all be affected by videotex and teletext applications. The economic foundation of publishing, broadcasting and CATV will be altered as will the way banks, retailers, and utilities deal with their customers. This foresighted book examines the ways in which the components of broadcast teletext and interactive videotex systems are put together, the planning and implementation of a system, and the economic, marketing, and social issues that will be affected.

Contents — An Introduction to Videotex. Components of an Interactive Videotex System: The Service Provider's Side. Components of an Interactive Videotex SystemL The Transmission Network and Subscriber Interface. Components of a Broadcast Videotex System — Teletext. Creation of Text and Graphic Displays. Planning and Managing Videotex Operations. The Economics of Videotex. The Information Base. Marketing Matters. Special Issues. Operational and Behavioral Factors Affecting Users. Tomorrow and the Day After. Appendices.

224 pp; 1985; $69.95.

CIRCUITS AND SOFTWARE FOR ELECTRONICS ENGINEERS

Edited by H. Bierman

This comprehensive collection of time-saving circuit ideas, creative design approaches, and design programs has been culled from articles appearing in *Electronics* magazine. Organized by circuit classificaitons, over 300 proven analog and digital circuits and programs are presented along with schematic diagrams and waveforms. Each classification covers a specific circuit function, allowing the rapid selection of the techniques best suited for an application.

Contents — Amplifiers. Analog Signal Processing. Audio Circuits. Automotive Circuits. Clock Circuits. Counters. Current Sources. Detectors. Discriminators. Display Circuits. Encoders and Decoders. Filters. Frequency Synthesizers. Function Generators. Instrument Circuits. Inverters. Limiters. Logic Circuits. Memory Circuits. Microprocessors. Modulators and Demondulators. Multiplexer Circuits. Multiplier Circuits. Multivibrators. Operational Amplifiers. Optoelectronic Circuits. Oscillators. Phase-Lock Circuits. Power Supplies. Protection Circuits. Pulse Generators. Sensors. Switching Circuits. Timing Circuits. Triggers. Voltage Regulators.

352 pp; 1984; $32.95.

SCR MANUAL — SIXTH EDITION

From General Electric

The fast-growing success of the SCR is paralleled by the growth of the General Electric SCR Manual. First published as an application note in 1958, the General Electric SCR Manual has been periodically revised, maintaining the basic theme of a practical, rather than theoretical, circuit and application guide for design engineers, students, teachers, and experimenters. This Edition is written by a group of engineers who, figuratively, live in the solid state power conversion arena. They are in constant touch with equipment designers and, as such, are exposed to the varied circuit problems and decisions peculiar to the application of power semiconductor devices. These authors have gained their insight and experience by contributing literally thousands of successful design projects involving thyristors in addition to drawing on the experience and work of their predecessors.

The previous Edition has been completely reviewed in detail. Much that is new has been added, reflecting the polish that SCR applications have acquired in the past five years. These changes do not stand out as new chapters, rather, each chapter has had the additional or revised information blended in with that which remains current and valid. For those of you who have used previous editions the format remains intact to maintain any familiarity you may have developed.

631pp; originally pub. 1982; $29.50

FIBER OPTIC COMMUNICATIONS

By J. Palais

This comprehensive yet readily accessible text gives all the basic information that engineers, technical students, business people, and others need to know to *understand, design,* and *specify* all the standard components for a complete fibre optical system.

Complete with block diagrams of entire fibre optics systems, this book gives you all-important mathematical formulas and results using only basic algebra and trigonometry. And it includes explanations and tables to make this information applicable *immediately.*

Topics covered include:

- a review of optic and wave travel
- the technology of components: fibres, light sources, light detectors, couplers, and distribution networks
- how to perform a related communications sytems analysis
- typical design decisions you may encounter when creating or implementing a fibre optics system
- a discussion of options for waveguide selection
- and more.

269pp; 1984; $29.50

A/V TROUBLE SHOOTER

By L. Kamenshine

Arranged for easy reading and loaded with illustrations, this book is a convenient source of information on twenty-three major pieces of equipment, from simple overhead projectors to cameras and video — plus transparencies, screens, and other materials: Here you'll find:

- an introduction to each piece of apparatus: its purpose and basic features
- general operating instructions and reminders
- possible problems and their causes and how to solve them
- a chapter-by-chapter glossary
- tips on what to pack in an "instant help kit," something every A/V user should have on hand
- facts about special lamps
- and plenty of advice on making the best possible A/V presentation . . . everything you need to become a confident A/V user!

255pp; 1985; $25.50

LOGIC CIRCUITS, 3RD ED. (UK)

By N. M. Morris.

The new edition of this established text provides an authoritative introduction to digital electronics. Recent developments in digital technology are reflected in many chapters where new material has been added and out dated material has been removed. New to this edition is material on error-correcting codes and chain codes, hexadecimal operations in relation to microcomputer arithmetic, integrated circuits in popular use, methods of interfacing microcomputer systems, and much more. The contents revolve around the central theme of logical devices and circuits, which is now one of the most important areas in the study of semiconductor devices and their applications.

World Radio History

Contents — Fundamentals of Logic. Static Logic Networks. Electronic Switching Devices and Circuits. Integrated Circuits and Logic Families. Flip-Flops and Data Storage. Asynchronous Counting Systems. Synchronous Counters, Code Converters and Parallel Adders. Microprocessors and Microcomputers. Instructions Classification, Addressing Modes and an Instruction Set. Microprocess Programming and Applications. Detailed Instruction Set.

256 pp; 1983; $26.95.

PRACTICAL MATH FOR ELECTRICITY AND ELECTRONICS

By P. Calter.

This book covers pratical mathematics as it relates specifically to electricity and electronics. It discusses arithmetic, algebra, geometry, trigonometry, as well as most common AD and DC calculations. The approach is practical and expository, with emphasis on simple solutions wherever possible. A calculator approach is used throughout the book.

Contents — Calculator Practice. Resistance. Introduction to Algebra. Solving Simple Equations. Ohm's Law. Electric Power and Energy. Percent Error and Percent Efficiency. Series Circuits. Parallel Circuits. Series-Parallel Networks. Systems of Lilnear Equations. Networks Having More Than One Source. Capacitors. Inductance. Logarithms and Exponential Functions. RC and RL Circuits. Review of Trigonometry. Alternating Current. Vectors and Phasors. Series ac Circuits. Parallel ac Circuits. Power in ac Circuits. Appendices.

240 pp; 1984; $20.95.

HANDBOOK OF PRACTICAL ELECTRICAL DESIGN

By F. McPartland

A how-to reference on the design of circuits and systems that supply electrical power for lighting, heating, motors, and other power loads and controls. The material is presented in the normal sequence of a design procedure to show how good design works in actual practice. Full of practical pointers and helpful illustrations, this authoritative, easy-to-use guide emphasizes accepted design practice and spotlights those design trends that have particular merit.

Contents — Planning for Electrical Design. Lighting and Appliance Branch Circuits. Motor Branch Circuits and Control Circuits. Feeders for Lighting and Power. Motor Feeders. Transformer Applications (to 600 Volts). Services. Equipment Selection. High-Voltae Systems (over 600 Volts). Design Reference Data. Index.

416 pp; 1983; $93.95.

MODERN ELECTRONIC CIRCUITS REFERENCE MANUAL

By J. Markus

Lists more than 3,600 practical modern electronic circuits, each with type numbers or values of all significant components, an identifying title, a concise description, performance data, and suggestions for other applications. Following each description, there is a citation giving the title of the original article or book in which the circuit appears, its authors, and the exact location of the circuit in the original source. Circuits presented in this massive collection range from those for amplifiers to those for voltage reference purposes. In between are audio, battery charging, burglar-alarm, memory, microprocessor, music, noise optoelectronic, phonograph, power control, receiver, remote-control, servo, siren, squelch, stereo, sweep, telephone, teleprinter, television, timer and voltage-reference circuits.

1,000 pp; 1980; $166.00.

ANALYSIS AND DESIGN OF DIGITAL INTEGRATED CIRCUITS

By D. A. Hodges and H. G. Jackson

This will be a state-of-the-art text for the rapidly emerging field of digital integrated circuits. The authors are highly respected academics who are considered among the leading authorities in integrated circuits and MOS technology. The text covers quantitative analysis and design of the noise margins, operating speed, and power consumption of digital integrated circuits. These circuits are the basis for large-scale integrated (LSI) and very large scale integrated (VLSI) memories, microcomputers, signal processors, and super computers now coming into widespread use.

Contents — Basic Concepts of Digital Electronics. Metal-Oxide-Semiconductor (MOS) Field Effect Transistor. MOS Inverters and Gate Circuits. Semiconductor Diodes. Bipolar Junction Transistor. Bipolar Transistor Inverter. Bipolar Digital Gate Circuits. Regenerative Logic Circuits. Digital Memories. Circuit Design for LSI and VLSI.

698 pp; 1983; $18.95.

TRANSFORMERS FOR ELECTRONIC CIRCUITS, 2ND ED.

By N. R. Grossner

This is the revised edition of a successful comprehensive reference on the theory and application of standard transformers. It includes new information on using transformers in digital and pulse circuits, and basic transformer and magnetic theory is exhaustively covered. Special attention is given to heating and thermal effects and their impact upon transformer performance. The magnetic circuits within transformers and inductive effects are treated in depth. Emphasis is placed on relating theory to real-world problems and their solutions.

Contents — Survey of Transformer Applications. Power Transformers: Circuits and Ratings. Reliability and Environment. Temperature Rise and Thermal Design. Power Transformers. Ratings and Size. Excitation: Inductane and Losses. Polarized Transformers and Inductors. The Wide Band Transformer: Analysis. The Wide Band Transformer: Synthesis. The Pulse Transformer: Analysis. The Pulse Transformer: Synthesis.

400 pp; 1983; $104.00.

MANUAL OF ACTIVE FILTER DESIGN, 2ND ED.

By J. L. Hilburn, D. E. Johnson

Completely updated to reflect advances in electronic technology, this new edition permits rapid design of all popular active filter types — low pass, high pass (both Butterworth and Chebyshev), bandpass, band-reject, phase-shift, and time delay (Bessel). Popular IC op amp types are featured to simplify construction, and convenient, one-of-a-kind design charts appear which allow filter design and selection of component values without extensive calculations. Design engineers will find this book both a handy reference and a timesaver.

Contents — Introduction. Low-Pass Filters. High-Pass Filters. Band-Pass Filters. Band-Reject Filters. Phase-Shift and Time-Delay Filters.

256 pp; 1983; $95.95.

OPTICAL FIBER COMMUNICATIONS

By G. E. Keiser

This self-contained text is intended for undergraduate or graduate courses in optical fibre communications as offered in departments of electrical engineering or physics. It is a good reference for communications professionals interested in fibre communication systems and cable design. It offers thorough coverage of the field and incorporates a wealth of material perviously unavailable in a single source.

Contents — Overview of Optical Fibre Communications, Optical Fibres: Structures and Waveguiding Fundamentals. Signal Degradation in Optical Fibres. Optical Sources. Power Launching and Coupling. Photodetectors. Optical Receiver Operation. Transmission Link Analysis. Measurements. Optical Fibre Fabrication and Cabling. Appendices.

336 pp; 1983; $18.95.

ELECTRONIC DISPLAYS

By E. G. Bylander

This book covers the use and application of digital displays for the practicing engineeer. It is written to answer recurring questions which arise between the manufacture, designer, user. It helps the engineer select, apply, and use digital displays of all types in a variety of different systems. Specific topics covered in the book include: survey of display types, electronic display symbols, specifying displays, comparison methods, environmental stability and ruggedness, addressing methods, mechanical considerations (mounting, connectors, etc.), human factors in display legibility, sharpness and blur, temperature factors, gas-discharge fundamentals, drive circuits, light emitting diodes, VLED displays, vacuum fluorescent displays, liquid crystal displays, and cathode-ray displays.

286 pp; 1980; $72.95.

ORDER FORM Please send me the following titles

Book	Quantity	Price
1.		
2.		
3.		
4.		
5.		

Freight and handling (Add $4.00 for first book and $0.50 for each additional book) Prices subject to change without notice

☐ Cheque enclosed OR you may use your credit card
☐ Bankcard ☐ American Express ☐ Visa Card

Card No. ..... Expiration ..... Signature .....

IF YOU WOULD LIKE TO RECEIVE OUR BOOKLIST POSTED DIRECTLY TO YOU PLEASE INDICATE

Name .....

Organisation .....

Address .....

Postcode ..... Telephone .....

(Please include full street address to permit rapid delivery by courier)

Please return this coupon or a copy to: DP Education (Books) PO Box 289 Wahroonga 2076
Cnr Fox Valley Rd & Kiogle St Wahroonga 2076 Ph: 487 2700 **A**

World Radio History

MC6809

8-BIT MICROPROCESSING UNIT

The MC6809 is a revolutionary high-performance 8-bit microprocessor which supports modern programming techniques such as position independence, reentrancy, and modular programming

This third-generation addition to the M6800 Family has major architectural improvements which include additional registers, instructions, and addressing modes.

The basic instructions of any computer are greatly enhanced by the presence of powerful addressing modes. The MC6809 has the most complete set of addressing modes available on any 8-bit microprocessor today

The MC6809 has hardware and software features which make it an ideal processor for higher level language execution or standard controller applications.

MC6800 COMPATIBLE

- Hardware – Interfaces with All M6800 Peripherals
- Software – Upward Source Code Compatible Instruction Set and Addressing Modes

ARCHITECTURAL FEATURES

- Two 16-Bit Index Registers
- Two 16-Bit Indexable Stack Pointers
- Two 8-Bit Accumulators can be Concatenated to Form One 16-Bit Accumulator
- Direct Page Register Allows Direct Addressing Throughout Memory

HARDWARE FEATURES

- On-Chip Oscillator (Crystal Frequency = 4 × E)
- $\overline{\text{DMA/BREQ}}$ Allows DMA Operation on Memory Refresh
- Fast Interrupt Request Input Stacks Only Condition Code Register and Program Counter
- MRDY Input Extends Data Access Times for Use with Slow Memory
- Interrupt Acknowledge Output Allows Vectoring by Devices
- Sync Acknowledge Output Allows for Synchronization to External Event
- Single Bus-Cycle $\overline{\text{RESET}}$
- Single 5-Volt Supply Operation
- $\overline{\text{NMI}}$ Inhibited After $\overline{\text{RESET}}$ Until After First Load of Stack Pointer
- Early Address Valid Allows Use with Slower Memories
- Early Write Data for Dynamic Memories

SOFTWARE FEATURES

- 10 Addressing Modes
  - 6800 Upward Compatible Addressing Modes
  - Direct Addressing Anywhere in Memory Map
  - Long Relative Branches
  - Program Counter Relative
  - True Indirect Addressing
  - Expanded Indexed Addressing
    - 0-, 5-, 8-, or 16-Bit Constant Offsets
    - 8- or 16-Bit Accumulator Offsets
    - Auto Increment/Decrement by 1 or 2
- Improved Stack Manipulation
- 1464 Instructions with Unique Addressing Modes
- 8 × 8 Unsigned Multiply
- 16-Bit Arithmetic
- Transfer/Exchange All Registers
- Push/Pull Any Registers or Any Set of Registers
- Load Effective Address

HMOS

(HIGH DENSITY N-CHANNEL, SILICON-GATE)

8-BIT
MICROPROCESSING
UNIT

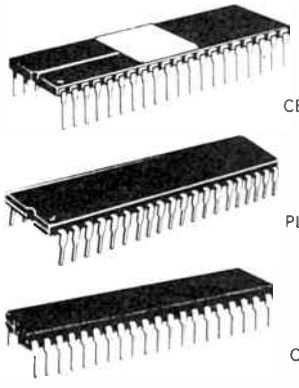

L SUFFIX
CERAMIC PACKAGE
CASE 715

P SUFFIX
PLASTIC PACKAGE
CASE 711

S SUFFIX
CERDIP PACKAGE
CASE 734

PIN ASSIGNMENT

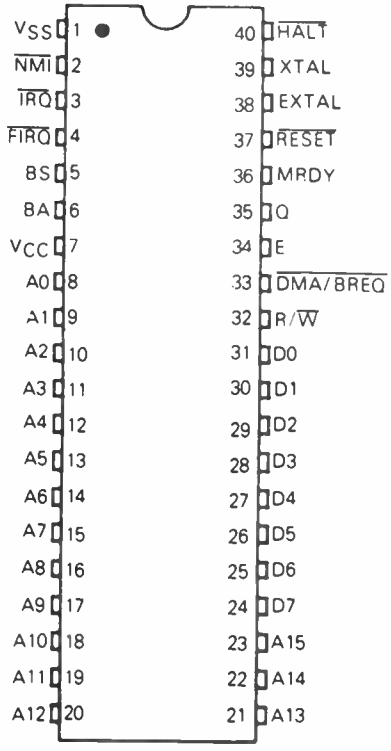

World Radio History

MOTOROLA

MC6309 EXPANDED BLOCK DIAGRAM

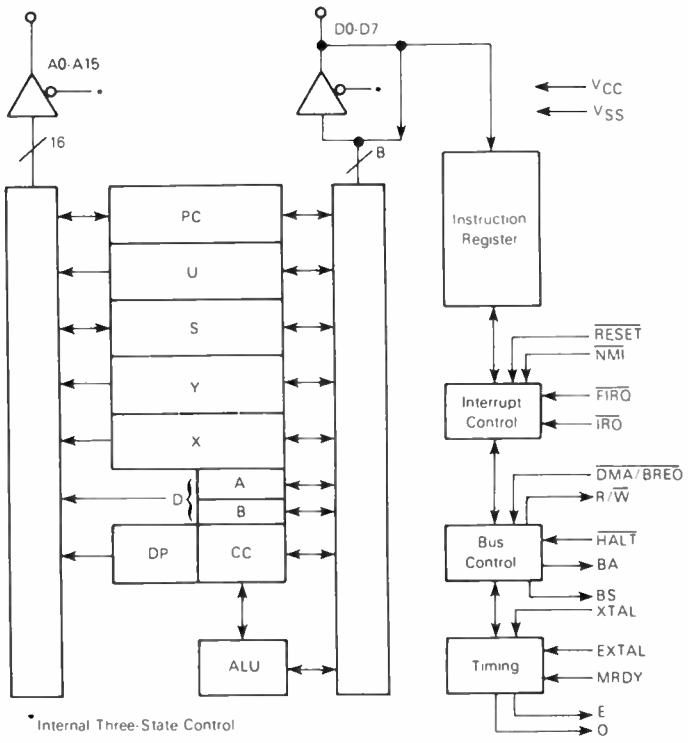

*Internal Three-State Control

8-BIT ACCUMULATOR AND MEMORY INSTRUCTIONS

Mnemonic(s)	Operation
ADCA, ADCB	Add memory to accumulator with carry
ADDA, ADDB	Add memory to accumulator
ANDA, ANDB	And memory with accumulator
ASL, ASLA, ASLB	Arithmetic shift of accumulator or memory left
ASR, ASRA, ASRB	Arithmetic shift of accumulator or memory right
BITA, BITB	Bit test memory with accumulator
CLR, CLRA, CLRB	Clear accumulator or memory location
CMPA, CMPB	Compare memory from accumulator
COM, COMA, COMB	Complement accumulator or memory location
DAA	Decimal adjust A accumulator
DEC, DECA, DECB	Decrement accumulator or memory location
EORA, EORB	Exclusive or memory with accumulator
EXG R1, R2	Exchange R1 with R2 (R1, R2 = A, B, CC, DP)
INC, INCA, INCB	Increment accumulator or memory location
LDA, LDB	Load accumulator from memory
LSL, LSLA, LSLB	Logical shift left accumulator or memory location
LSR, LSRA, LSRB	Logical shift right accumulator or memory location
MUL	Unsigned multiply (A × B → D)
NEG, NEGA, NEGB	Negate accumulator or memory
ORA, ORB	Or memory with accumulator
ROL, ROLA, ROLB	Rotate accumulator or memory left
ROR, RORA, RORB	Rotate accumulator or memory right
SBCA, SBCB	Subtract memory from accumulator with borrow
STA, STB	Store accumulator to memory
SUBA, SUBB	Subtract memory from accumulator
TST, TSTA, TSTB	Test accumulator or memory location
TFR R1, R2	Transfer R1 to R2 (R1, R2 = A, B, CC, DP)

NOTE A, B, CC, or DP may be pushed to (pulled from) stack with either PSHS, PSHU (PULS, PULU) instructions

16-BIT ACCUMULATOR AND MEMORY INSTRUCTIONS

Mnemonic(s)	Operation
ADDD	Add memory to D accumulator
CMPD	Compare memory from D accumulator
EXG D, R	Exchange D with X, Y, S, U, or PC
LDD	Load D accumulator from memory
SEX	Sign Extend B accumulator into A accumulator
STD	Store D accumulator to memory
SUBD	Subtract memory from D accumulator
TFR D, R	Transfer D to X, Y, S, U, or PC
TFR R, D	Transfer X, Y, S, U, or PC to D

NOTE D may be pushed (pulled) to stack with either PSHS, PSHU (PULS PULU) instructions

INDEX REGISTER/STACK POINTER INSTRUCTIONS

Instruction	Description
CMPS, CMPU	Compare memory from stack pointer
CMPX, CMPY	Compare memory from index register
EXG R1, R2	Exchange D, X, Y, S, U, or PC with D, X, Y, S, U, or PC
LEAS, LEAU	Load effective address into stack pointer
LEAX, LEAY	Load effective address into index register
LDS, LDU	Load stack pointer from memory
LDX, LDY	Load index register from memory
PSHS	Push A, B, CC, DP, D, X, Y, U, or PC onto hardware stack
PSHU	Push A, B, CC, DP, D, X, Y, S, or PC onto user stack
PULS	Pull A, B, CC, DP, D, X, Y, U, or PC from hardware stack
PULU	Pull A, B, CC, DP, D, X, Y, S, or PC from hardware stack
STS, STU	Store stack pointer to memory
STX, STY	Store index register to memory
TFR R1, R2	Transfer D, X, Y, S, U, or PC to D, X, Y, S, U, or PC
ABX	Add B accumulator to X (unsigned)

BRANCH INSTRUCTIONS

Instruction	Description
	SIMPLE BRANCHES
BEQ, LBEQ	Branch if equal
BNE, LBNE	Branch if not equal
BMI, LBMI	Branch if minus
BPL, LBPL	Branch if plus
BCS, LBCS	Branch if carry set
BCC, LBCC	Branch if carry clear
BVS, LBVS	Branch if overflow set
BVC, LBVC	Branch if overflow clear
	SIGNED BRANCHES
BGT, LBGT	Branch if greater (signed)
BVS, LBVS	Branch if invalid 2s complement result
BGE, LBGE	Branch if greater than or equal (signed)
BEQ, LBEQ	Branch if equal
BNE, LBNE	Branch if not equal
BLE, LBLE	Branch if less than or equal (signed)
BVC, LBVC	Branch if valid 2s complement result
BLT, LBLT	Branch if less than (signed)
	UNSIGNED BRANCHES
BHI, LBHI	Branch if higher (unsigned)
BCC, LBCC	Branch if higher or same (unsigned)
BHS, LBHS	Branch if higher or same (unsigned)
BEQ, LBEQ	Branch if equal
BNE, LBNE	Branch if not equal
BLS, LBLS	Branch if lower or same (unsigned)
BCS, LBCS	Branch if lower (unsigned)
BLO, LBLO	Branch if lower (unsigned)
	OTHER BRANCHES
BSR, LBSR	Branch to subroutine
BRA, LBRA	Branch always
BRN, LBRN	Branch never

MISCELLANEOUS INSTRUCTIONS

Instruction	Description
ANDCC	AND condition code register
CWAI	AND condition code register, then wait for interrupt
NOP	No operation
ORCC	OR condition code register
JMP	Jump
JSR	Jump to subroutine
RTI	Return from interrupt
RTS	Return from subroutine
SWI, SWI2, SWI3	Software interrupt (absolute, indirect)
SYNC	Synchronize with interrupt line

World Radio History

MC6821

PERIPHERAL INTERFACE ADAPTER (PIA)

The MC6821 Peripheral Interface Adapter provides the universal means of interfacing peripheral equipment to the M6800 family of microprocessors. This device is capable of interfacing the MPU to peripherals through two 8-bit bidirectional peripheral data buses and four control lines. No external logic is required for interfacing to most peripheral devices.

The functional configuration of the PIA is programmed by the MPU during system initialization. Each of the peripheral data lines can be programmed to act as an input or output, and each of the four control/interrupt lines may be programmed for one of several control modes. This allows a high degree of flexibility in the overall operation of the interface.

- 8-Bit Bidirectional Data Bus for Communication with the MPU
- Two Bidirectional 8-Bit Buses for Interface to Peripherals
- Two Programmable Control Registers
- Two Programmable Data Direction Registers
- Four Individually-Controlled Interrupt Input Lines; Two Usable as Peripheral Control Outputs
- Handshake Control Logic for Input and Output Peripheral Operation
- High-Impedance Three-State and Direct Transistor Drive Peripheral Lines
- Program Controlled Interrupt and Interrupt Disable Capability
- CMOS Drive Capability on Side A Peripheral Lines
- Two TTL Drive Capability on All A and B Side Buffers
- TTL-Compatible
- Static Operation

MOS

(N-CHANNEL, SILICON-GATE, DEPLETION LOAD)

PERIPHERAL INTERFACE ADAPTER

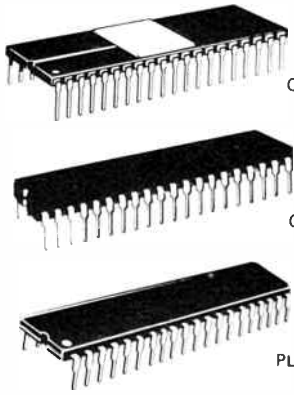

L SUFFIX
CERAMIC PACKAGE
CASE 715

S SUFFIX
CERDIP PACKAGE
CASE 734

P SUFFIX
PLASTIC PACKAGE
CASE 711

EXPANDED BLOCK DIAGRAM

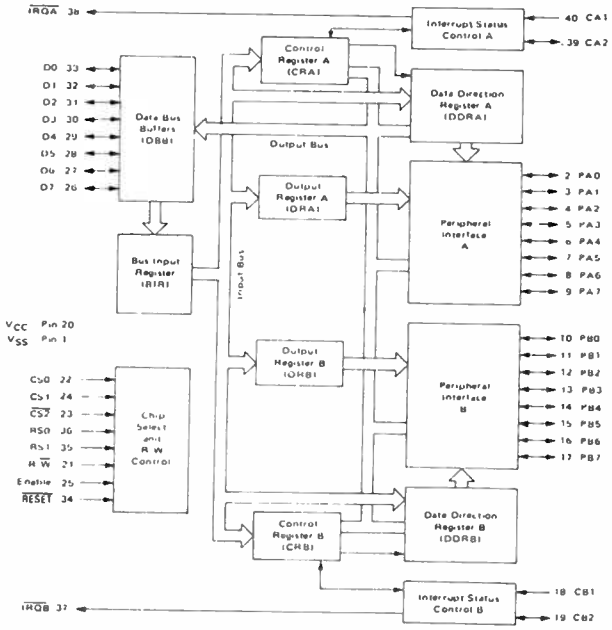

PIN ASSIGNMENT

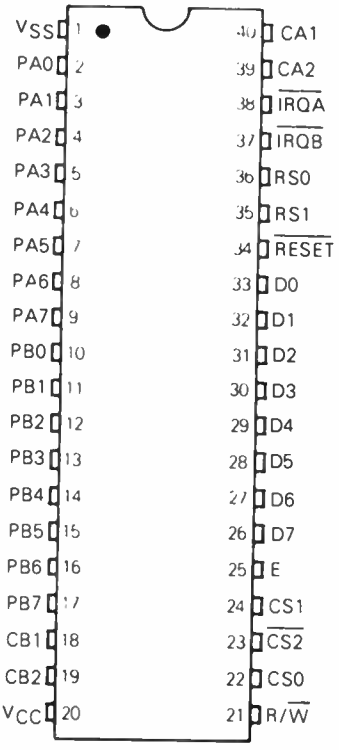

World Radio History

MC6850

ASYNCHRONOUS COMMUNICATIONS INTERFACE ADAPTER (ACIA)

The MC6850 Asynchronous Communications Interface Adapter provides the data formatting and control to interface serial asynchronous data communications information to bus organized systems such as the MC6800 Microprocessing Unit.

The bus interface of the MC6850 includes select, enable, read/write, interrupt and bus interface logic to allow data transfer over an 8-bit bidirectional data bus. The parallel data of the bus system is serially transmitted and received by the asynchronous data interface, with proper formatting and error checking. The functional configuration of the ACIA is programmed via the data bus during system initialization. A programmable Control Register provides variable word lengths, clock division ratios, transmit control, receive control, and interrupt control. For peripheral or modem operation, three control lines are provided. These lines allow the ACIA to interface directly with the MC6860L 0-600 bps digital modem.

- 8- and 9-Bit Transmission
- Optional Even and Odd Parity
- Parity, Overrun and Framing Error Checking
- Programmable Control Register
- Optional ÷1, ÷16, and ÷64 Clock Modes
- Up to 1.0 Mbps Transmission
- False Start Bit Deletion
- Peripheral/Modem Control Functions
- Double Buffered
- One- or Two-Stop Bit Operation

MOS
(N-CHANNEL, SILICON-GATE)

ASYNCHRONOUS COMMUNICATIONS INTERFACE ADAPTER

S SUFFIX
CERDIP PACKAGE
CASE 623

P SUFFIX
PLASTIC PACKAGE
CASE 709

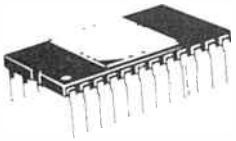

L SUFFIX
CERAMIC PACKAGE
CASE 716

MC6850 ASYNCHRONOUS COMMUNICATIONS INTERFACE ADAPTER BLOCK DIAGRAM

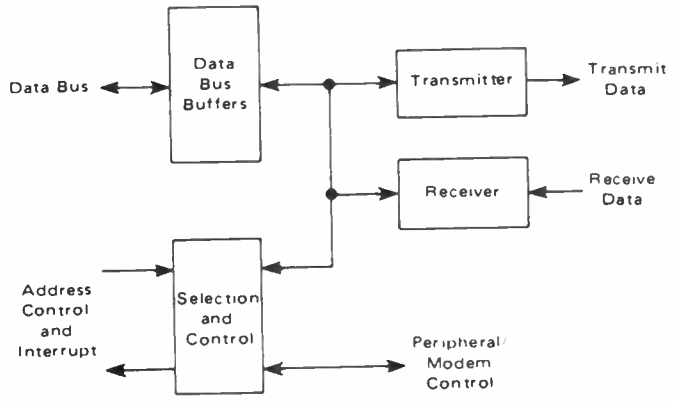

PIN ASSIGNMENT

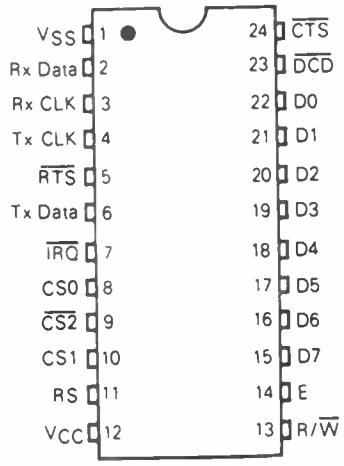

World Radio History

— from page 63

tions: **(1)** predict the general level of solar activity expected to exist at the time when the predictions are to be used, **(2)** estimate what the corresponding gross behaviour of the ionosphere will be, **(3)** calculate the ionosphere and propagation geometry for the given circuit, **(4)** calculate the propagation parameters such as MUF and LUF. There will be errors introduced at all stages of this procedure.

Predicting the general level of solar activity becomes easier and more accurate as the required lead time decreases. If we wish to make predictions for a few hours ahead, we will have no problem predicting the general level of solar activity because we can safely assume that it will not change in that time. This assumes, of course, that we know what the level of activity is "now", but that is no problem in principle because there are organisations around the world which cooperate to keep a 24-hour watch on the sun. The problems arise when we want to use longer lead times.

Routine predictions are made several months ahead, mainly so that the HF organisations can distribute them to the appropriate sections within their organisation and share the allocated frequencies in an efficient fashion. On this time scale, there is a good chance of introducing a reasonable error in predicting the general level of solar activity because absolutely no one knows yet how to tell what active regions are going to appear on the sun, with corresponding increases in ionizing UV flux. Predictions are never made more than a few months ahead, except in the form of planning predictions which apply for different months and levels of solar activity, but do not tell us to which particular months they apply. Is a March planning prediction for high solar activity any good for March 1990, March 2010 or what?

The errors introduced in other stages of making HF predictions all depend on how clever we are, and how much effort we wish to spend in setting up accurate models of the ionosphere and HF propagation. In general, these can be modelled to only a reasonable precision, and large efforts are still being made to improve the precision further.

One of the more interesting problems to arise is the choice of propagationn modes. On many transequatorial circuits, which are those from a transmiter in one hemisphere to a receiver on the other side of the equator in the other hemisphere, it is quite common for the signals to travel by unusual propagation modes which have a higher MUF than the normal modes as well. We shall return to these very interesting propagation modes in a later article.

Field strength of the received signal

We have concentrated so far on the problem of choosing the correct operating frequency and antenna for communications on a given circuit. While these are very necessary preconditions for successful communications, there remains the problem of ensuring that the signal reaching the receiver can be detected above the level of the background noise. The various types of noise will be discussed in a later part and will not be discussed further here. Rather, we shall take a brief look at the various factors which contribute to the strength of the signal reaching the receiver.

The strength of the signal at the receiver is controlled by four things — the transmitter power, the gain of the transmitting antenna at the particular frequency and elevation angle, the attenuation of the signal between the transmitting and receiving antennas, and the gain of the receiving antenna. Our main interest here is the loss of signal strength between the two antennas, which is called the *pathloss*.

The pathloss, L, is the total loss of signal strength along the path and is made up of six main contributing factors. By far the largest loss is the free-space loss, the signal strength falling off as I/D^2, where D is the distance along the propagation path (note — not the ground range). The next most important is usually the absorption loss.

The *free-space loss*, L_b, is equal to 20 log(12.6D/w), where w is the wavelength of the signals, measured in the same units as D. The "log" means logarithm to base 10, and can be obtained very simply by pressing the log button on a suitable calculator.

The *absorption loss*, L_a, is made up of deviative and non-deviative components, as described in Part 5 (April '86). The former is important for vertical incidence reflection from the E layer especially near foE, but the latter is the important component for long distance F-region circuits. Non-deviative absorption depends inversely on the square of the operating frequency, and has other variations described in Part 5.

The *ground reflection loss*, L_g, depends on the conductivity and dielectric constant of the earth at the reflection point. It is less for sea reflections than for dry ground reflections (Part 5 April '86, page 84).

The *polarisation coupling loss*, L_p, depends on the orientation of the incident wave at the ionosphere relative to the earth's magnetic field, and the polarisation of the antennas (Part 5). In the worst case, L_p can actually be the controlling influence on the received signal strength.

The *sporadic-E obscuration loss*, L_q, depends very much on the value of the critical frequency of the Es layer, foEs, relative to the operating frequency. The higher the value of foEs, the higher the probability that the signals will be prevented from reaching the F layer.

The *horizon focus gain*, G_f, is a gain (we do not get many of these!), which is largest for low elevation angles. It is due to the arrival at the receiver of rays from a cone of elevation angles at the transmitter, rather than from just one elevation angle.

The calculation of L requires an accurate model of the ionosphere and an iterative search (try and try again) for the propagation modes which link the transmitter and receiver, without many of the simplifying assumptions made when calculating just the MUF. As such, it is a time-consuming and fairly expensive procedure. However, the calculations are necessary when a circuit is first being engineered, since the results tell us what antennas and transmitter power are required. Once the pathloss and the elevation angles have been calculated, it is a simple matter to choose a suitable antenna. The calculation of the required transmitter power involves a consideration of the noise levels which must be overcome, and the required fading margin, both of which are described in a later part.

"Now-casting" the ionosphere

As we saw in Parts 1 and 4, the ionosphere is monitored routinely on a grand scale. The instrument used is a vertical incidence HF radar called an *ionosonde*. An ionosonde measures the time delay of the signal at each frequency, if a return echo is detected. This time delay is converted into a "virtual height", which is the height which the signal would have reached if it had travelled at the speed of light in a vacuum. In fact it travels more slowly, especially as it penetrates to the peak of a layer. Traditionally, the plot of virtual height versus frequency is then displayed on a cathode ray tube and photographed, giving a picture known as an *ionogram*. Some representative ionograms are given in the accompanying panel.

The film is processed and the ionogram analysed to determine features such as foE, and foF1 and foF2, the presence of Es, and so on. These "scaled" data are then entered into a computer and made available for studies of the ionosphere.

World Radio History

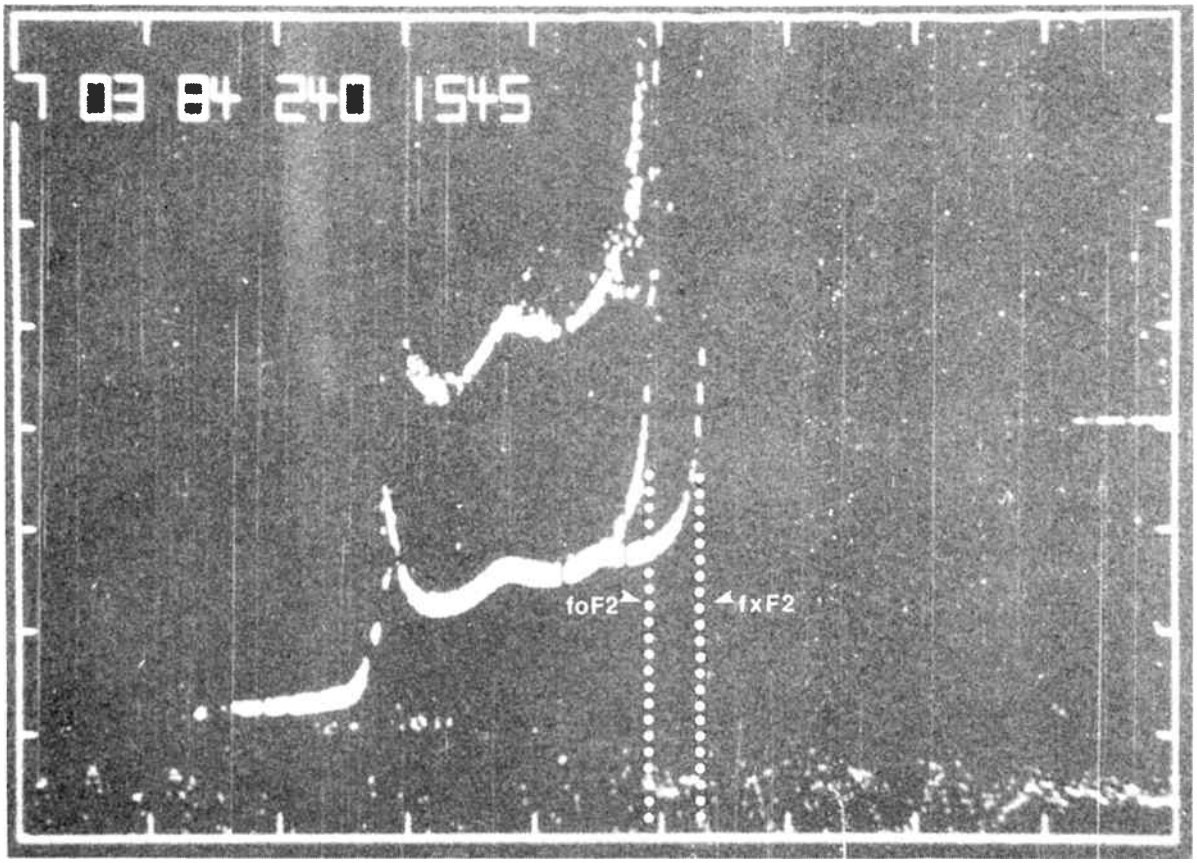

Vertical incidence ionogram showing foF2 and fxF2.

The time scale for this chain of events is far too long for the serious communicator who wants to know what is going on *now*. However, recent advances in modern technology have permitted the manufacture of ionosondes so cheap (note that this is a relative term) and versatile that it is now possible to monitor the ionosphere in real time. A picture can thus be built up of what the ionosphere is doing now, when we want to use it, rather than rely on predictions made of the average behaviour of the ionosphere a few days or weeks in advance. In other word instead of *fore*casting the state of the ionosphere, we *now*-cast it — hence the name. (The purist may prefer the term "real-time specification of the ionosphere".)

In the simplest situation, a base station wishing to maintain the best possible communications with field stations out to a few hundred km away could use an ionosonde at the station itself to obtain ionograms. Using the rough and ready rule that the layers of the ionosphere do not change much over a horizontal distance equal to the height of the layer, the overhead echoes can be used to characterise the E layer out to a radius of about 100 km and the F layer out to about 300 km.

The use of an ionosonde at the base station has several advantages:

(1) In conjunction with HF predictions, it will indicate whether or not the critical frequency, foF2, is at the expected level, or depressed because of an ionospheric storm (to be described in a later part). If the foF2 is clearly lower than the expected value, it can safely be assumed that it will be depressed over a region of at least a 300 km radius.

(2) It can assure us that the ionosphere "is still there" for us to use, and has not been rendered useless by large increases in absorption due to solar flares.

(3) Multipath interference is detrimental to HF communications, so it is best to choose a frequency that is propagated by only one of the two modes of polarisation, the ordinary and the extraordinary. This is readily achieved by working at a frequency greater than foF2, but less than fxF2. fxF2 is the critical frequency for reflection by the F region of a vertically incident extraordinary ray. It is always greater than foF2 by about 0.5 MHz. Working too close to fxF2 could result in MUF fading if the ionosphere is disturbed by movements in the neutral atmosphere.

(4) When a very dense sporadic-E layer is present, propagation will be via Es modes which have better propagation characteristics than the normal F layer (no fading, no Doppler shift, strong signal strength) and offer the possibility of faster and more reliable transmission of data.

For long distance communications, the ideal place to have an ionosonde is at each of the expected ionospheric reflection points. This fortunate state of affairs does not happen very often, so we are reduced to the slightly less attractive option of using an ionosonde at one location to infer what the ionosphere is doing at some other location.

One technique which can be adopted for this purpose is to use calibration graphs for that location of foF2 versus sunspot number, or ionospheric index (see Part 4b), to determine what sunspot number would have been expected to lead to the observed value of foF2. This "effective" sunspot number is then used, in conjunction with calibration graphs for the desired location. There are many variations of this technique, which we shall not go into. The ideal situation is one in which a network of ionosondes controlled by a central coordinator covers the whole part of the ionosphere in which reflections take place. The problem then becomes similar to that of weather mapping and forecasting.

World Radio History

Binary, octal, hex and BCD number systems

by Theo Baitch

IN THE PREVIOUS ARTICLE, we found out all about binary, octal and hexadecimal numbers and how to express them in their respective number system. This concluding article describes the binary coded decimal (BCD) notation which is widely used in electronic calculators as well as in computers and data transfer systems. You can also learn how to convert a number expressed in any one of the above number system into a number of the same numerical value, but expressed in any other number system.

Binary coded decimal (BCD) notation

As shown in the preceding article, the binary number system is the simplest and the best suited for digital computers. On the other hand, the decimal system is the most convenient and the most familiar throughout the world. There arose the need therefore for a simple method to convert from binary to decimal etc. It is very time consuming to convert long strings of binary numbers into decimals. The problem was overcome in practice through the creation of the **"Binary Coded Decimal"** (or BCD) system.

BCD is a 4-bit decimal digit code. To convert from "decimal" to BCD, each decimal digit is simply replaced with the corresponding 4-bit binary code:

Decimal digit	Binary (BCD) code
0	0000
1	0001
2	0010
3	0011
4	0100
5	0101
6	0110
7	0111
8	1000
9	1001

The BCD code represents each digit of the decimal number by a 4-bit binary code. Only 4-bit binary codings from 0000 through to 1001 are used as shown in the above Table and these are easily remembered. The codings 1010 through to 1111 are not used and are invalid or forbidden.

From the practical point of view, the main advantage of the BCD code is the relative ease of converting to and from the decimal system. Electronic (handheld) calculators frequently use the BCD system, because the input numbers are entered in decimal form via the keyboard and the output numbers are displayed in decimal form.

The BCD code described above is also frequently called the "8421-BCD" system, the number representing the *weight* of the individual columns.

Thus for example:

Decimal: 3 0 7 = 307_{10}

BCD: 0011 0000 0111 = 001100000111_{BCD}

and

BCD: 0010010110011000_{BCD}

Decimal: 2 5 9 8 = 2598_{10}

Number conversion

We have read so far all about the ins and outs of the various number systems to the base of 10 (our conventional decimal numbers) and to the most exotic bases of 2 (binary), 8 (octal) and 16 (hexadecimal).

Our next task will be to convert numbers from one of the above four number systems into numbers in any of the remaining number systems, but representing in each case the same quantity: the individual numbers may look different, but they represent the same amount.

Converting a decimal number to another base

This conversion is a good starting point because here we take a number with which we are all very familiar (a conventional decimal number) and express it in any of those exotic number systems we have spoken about so far.

While there are several methods of doing this conversion, the most conventional (or "pedestrian") method is the one shown below and which can be used with any base whatsover.

It consists in starting with the decimal number to be evaluated, obtain the largest power of the new base from a prepared table, without exceeding the original number. Record this, then subtract this table-obtained number from the original number. Repeat the process for the remainder and continue until the remainder is zero. Finally, line up (add) the string of numbers to the new base obtained from the table. The result is the answer.

World Radio History

Worked Example 1

(1) Convert 105_{10} to binary.

(As explained in the preceding article, the subscript indicates the "base" or "radix" of the particular number system, in which the specific number is expressed).

Look-up Table (values of power of the base 2)

2^{10}	2^9	2^8	2^7	2^6	2^5	2^4	2^3	2^2	2^1	2^0
1028	512	256	128	64	32	16	8	4	2	1

In following the above procedure and using the look-up-table for 2 raised to various powers, we now pass through the individual steps of the calculations.

Note that when the next lower number in the look-up table exceeds the preceding remainder, it is multiplied by zero (0), thus becoming zero itself. Thus the original remainder is carried intact to the next lower number still of the look-up table.

Most significant bit (MSB)

$$\begin{array}{l} 105 - 1 \times 64 = 2^6 = 1 \text{ in 7th position} \\ \quad 41 \\ 41 - 1 \times 32 = 2^5 = 1 \text{ in 6th position} \\ \quad 9 \\ 9 - 0 \times 16 = 2^4 = 0 \text{ in 5th position} \\ \quad 9 \\ 9 - 1 \times 8 = 2^3 = 1 \text{ in 4th position} \\ \quad 1 \\ 1 - 0 \times 4 = 2^2 = 0 \text{ in 3rd position} \\ \quad 1 \\ 1 - 0 \times 2 = 2^1 = 0 \text{ in 2nd position} \\ \quad 1 \\ 1 - 1 \times 1 = 2^0 = 1 \text{ in 1st position} \end{array}$$

Least significant bit (LSB)

$105_{10} = 1101001_2$

Worked Example 2

Convert 3183_{10} to octal.

Follow the previous procedure again, but this time use the look-up table below for 8 raised to various powers:

Look-up table (values to powers of the base 8)

8^4	8^3	8^2	8^1	8^0
4096	512	64	8	1

Most significant bit (MSB)

$$\begin{array}{l} 3183 - 6 \times 512 = 6 \times 8^3 = 6 \\ \quad 111 \\ 111 - 1 \times 64 = 1 \times 8^2 = 1 \\ \quad 47 \\ 47 - 5 \times 8 = 5 \times 8^1 = 5 \\ \quad 7 \\ 7 - 7 \times 1 = 8 \times 8^0 = 7 \text{ LSB} \end{array}$$

$3183_{10} = 6157_8$

Worked Example 3

Convert 3946_{10} to hexadecimal ("hex").

Using this time the look-up-table for values of powers of base 16:

16^3	16^2	16^1	16^0
4096	256	16	1

(Most significant bit)

$$\begin{array}{l} 3946 - 15 \times 256 = 15 \times 16^2 = F \\ \quad 106 \\ 106 - 6 \times 16 = 6 \times 16^1 = 6 \\ \quad 10 \\ 10 - 10 \times 1 = 10 \times 16^0 = A \\ \quad 0 \end{array}$$

$3946_{10} = F6A_{16}$

Conversion from another base to a decimal number

Actually, this is something which we already know how to do from reading the first article. All we need to remember is that each digit carries a certain weight and that this digit's positional value represents a power of the base of the specific numbering system.

So, the decimal number 3183_{10} can be expanded to the form:

$$3 \times 1000 + 1 \times 100 + 8 \times 10 + 3 \times 1 \text{ or}$$
$$3 \times 10^3 + 1 \times 10^2 + 8 \times 10^1 + 3 \times 10^0$$

It has been shown in a similar manner that the same principle can be extended to the binary number system, where the binary number 10110101_2 for example can be expanded to:

$$1 \times 2^7 + 0 \times 2^6 + 1 \times 2^5 + 1 \times 2^4 + 0 \times 2^3 + 1 \times 2^2 + 0 \times 2^1 + 1 \times 2^0$$

The weighting factors are shown in bold type. The method used when converting a number to another

— to page 104

World Radio History

Practical switchmode power supplies deliver high power at high efficiencies

Gerald Reiter

"Switchmode" power supplies are able to deliver well-regulated, high current outputs with minimal power dissipation and hence, high efficiencies. The supplies described here deliver +5 V at 7 A, +12 V at 3 A, and two negative rails of -5 V and -12 V at 500 mA each from an input of 10-17 Vdc. Efficiency achieved at full load and 12 V input was 80%.

THE POWER SUPPLIES shown in the circuits here were designed and constructed to power my computer equipment from either a mains transformer/rectifier or a 12 V vehicle battery as standby during mains failures or 'brownouts'. Two high current positive supply rails were required, of 5 V and 12 V, along with two low current requirement negative supply rails of -5 V and -12 V. The +5 V supply could be used as a stand-alone unit if desired.

The National switchmode controller IC type LM3524 was used in each unit, but in different ways. I used what commonly available components I could and searched for ready sources of the 'specialised' items — which I shall mention later. I'll tackle the description of the circuitry section by section.

The +5 V section

The circuitry for this is shown in Circuit 1. This is a step-down switchmode supply employing a Siemens BUZ71 'SIPMOS' FET, Q1, as the switch. This dumps current into L2 which stores energy in its magnetic field. As more current is drawn from the output, the LM3524 controller (IC1) turns Q1 on more often to restore the energy in L2's magnetic field.

The advantage of using a SIPMOS switching device lies in the fact that it has a very low on resistance, around 100 milliohms, together with fast rise and fall switching speeds. Here, the gate of Q1 is bootstrapped with C5 to further improve the switching rise time.

The circuit was designed to cope with a dc input as low as 10 V, as it may be called on to operate from a storage battery during mains failures and this allows for some voltage drop over the cables between the battery and supply. The design maximum input voltage is 17 V.

The gate on the BUZ71 (Q1) should be at least 10 V above the source voltage. I derived a 20 V supply for this purpose from the +12 V section (Circuit 2) via a voltage-doubler rectifier, D7/D8-C23/C24. If the +5 V section is used as a stand-alone unit, then you'll need to derive this 20 V for Q1's gate some other way. Figure 1 shows a suggested voltage doubler. Note the on/off switch.

When L2 is delivering energy to the output, the output current return circuit is via D1. This needs to be a high speed diode with low forward voltage drop. Hence, a Shottky power diode is employed here. I used a 1N5827.

The output voltage is adjusted with RV1, which sets the voltage on the LM3524's internal error amplifier inverting input.

Many of the components are standard off-the-shelf items in most electronics stores. However, some specialised items are required. Coil details are given in the accompanying table. L1 and L3 are not very critical as they are only filters. They may be wound on a short length of ordinary ferrite 'aerial' rod (flat or round, it won't matter). However, L2 is the 'storage' inductor. For this, I used a Siemens RM10 potcore with 14 turns of heavy gauge (1.25 mm) enamelled copper wire, making a gap between the pair of cores of about 0.2 mm with a slip of paper. I would have preferred a TD3003 (also RM10) potcore here as it is specially designed for non-linear storage choke applications. But, it was unavailable at the time. Capacitors C3, C6 and C7 should be either solid tantalums or Siemens 'computer grade' electrolytics (B43455 family). I mounted Q1 on a Dick Smith H-3470 heatsink and D1 on one of their H-3400 heatsinks.

The +12 V section

This is actually a pulse-width controlled push-pull dc-dc inverter. An LM3524 controller is used here, too. Voltage feedback from the main dc output, via RV3, R39 and R40, to the LM3524, IC3, provides control of its output pulse width. Pushpull pulse outputs from IC3 are available (it's sure a versatile chip!). These outputs are buffered by ICs 4 and 5 which provide drive to the gates of Q7-Q8, the inverter switches. Once again, I used BUZ71 SIPMOS FETs for the advantages mentioned earlier. Protection from the high voltage switching spikes generated is provided for each FET by ZD4/D5 and ZD5/D6. 'Soft starting' of the circuit is provided by C18/R36.

The switching FETs drive the primary of T1. The main secondary output is full-wave rectified by D9-D10 to provide the +12 V output. A choke-input filter is employed, followed by a two-stage pi-section filter, to reduce the 'hash' on the output to minimal levels. The two negative supply rails are derived from another, tapped, secondary on T1. Diodes D11-12-13-14 rectify the outputs, two choke-input filters being employed. Two three-terminal regulators, IC6 and IC7, provide regulated outputs of -12 V and -5 V, respectively. These may be deleted if not required.

The +12 V output is adjusted via RV3 which sets the voltage applied to the inverting input of the LM3524's internal

World Radio History

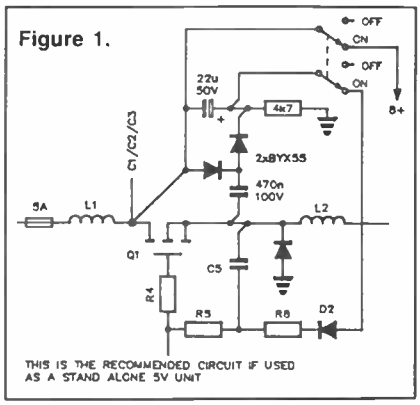

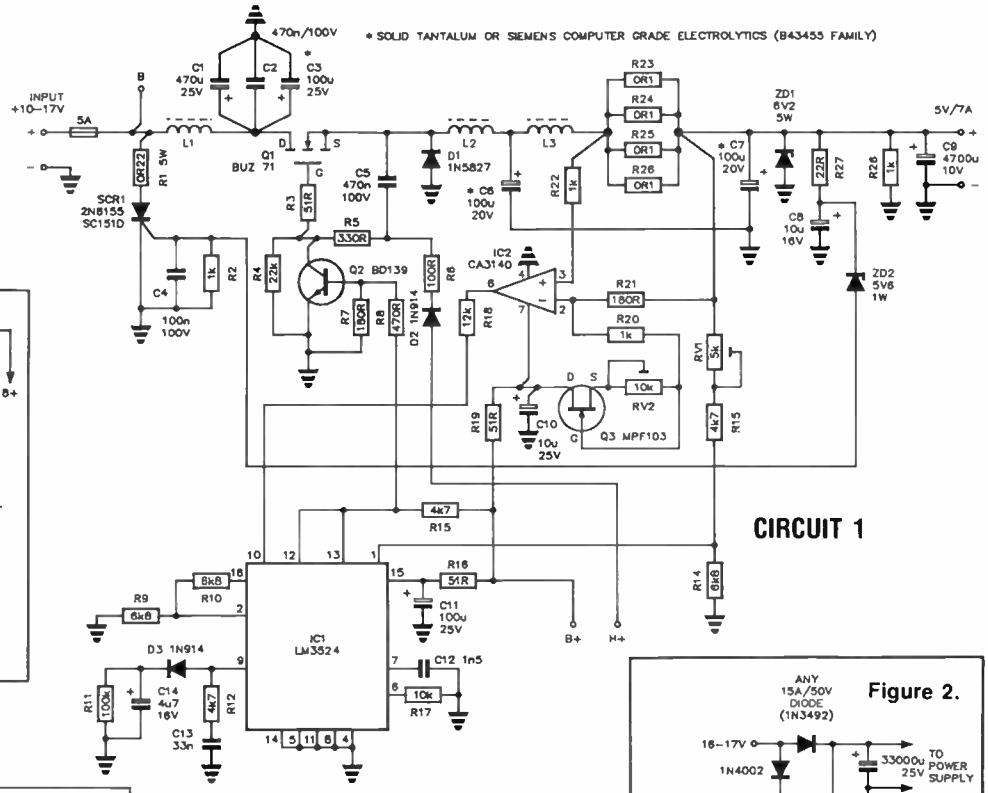

CIRCUIT 1

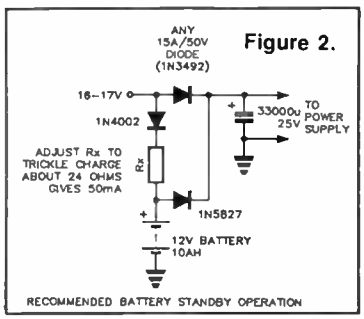

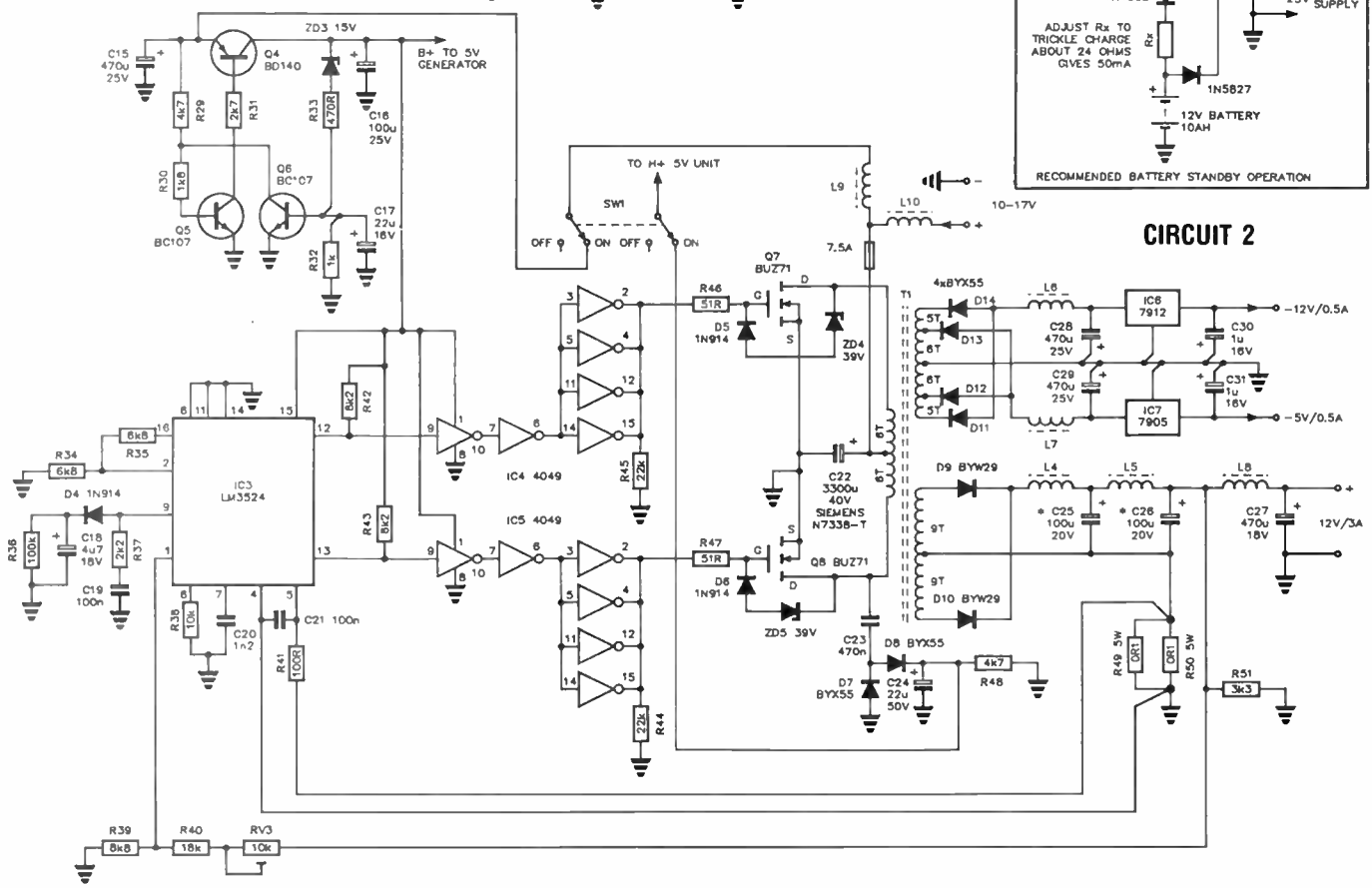

CIRCUIT 2

error amplifier. The circuitry involving Q4-5-6 and ZD3 is a voltage regulator to ensure the supply to IC4 and IC5 does not exceed safe limits. At 10 V supply input, only 100 mV is dropped across Q4.

In this section, T1 employs a Siemens ferrite E-core assembly. Note that the primaries and secondaries are each *bifilar-wound*. Wind on the secondaries first, then the primary over the top. Put a layer of insulation tape between the windings. ▶

World Radio History

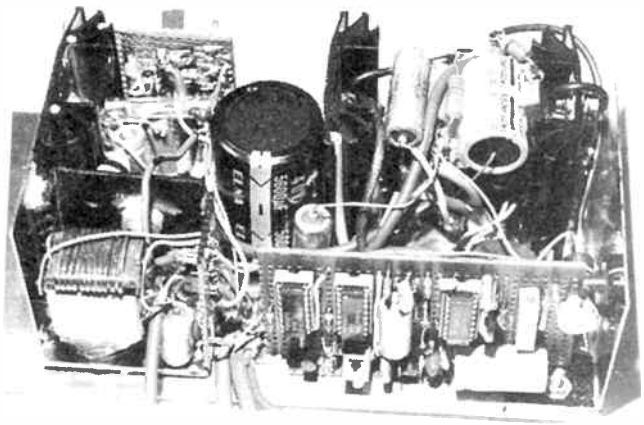

Yes, I know — but it works! This is a general view of the completed supplies, Circuits 1 and 2. The control electronics for Circuit 2 is visible on the board at the front right hand side, with T1 buried beneath components at the rear.

Chokes L6 and L7 are wound on an RM10 assembly, while coils L1-3-8-9-10 are wound on short lengths of ferrite rod. Note that C22 is a Siemens type, N7338-T. The value is not critical, providing it's at least the value given or above that. Capacitors C25-C26 should be solid tantalums or 'computer grade' electrolytics. The FETs Q7 and Q8 I mounted on a DSE H-3470 heatsink, and diodes D9-D10 on H-3400 heatsink.

The +12 V section can be used stand-alone if you delete C23, C24, R48, D7 and D8.

Protection

For the +5 V section, current-limit protection is achieved with IC2, Q3 and R23-R26, which provides output voltage 'fold-back' when the output current causes the voltage across R23-R26 to exceed a predetermined level. Maximum output current is set to 7.5 A with RV2. The output can be short-circuited indefinitely.

Zener ZD1 clamps the output voltage to 6.2 volts in the event Q1 fails, while ZD2 and SCR1 provide 'crowbar' protection by shorting the supply input in the event of excessive voltage appearing at the output, thus blowing the input fuse.

For the +12 V section, the LM3524 (IC3) is pressed into service to provide protection. Resistors R45-R50, in series with the output negative return rail, provide a small voltage drop to the 'sense' input of IC3. Maximum output current is set at about 4 A by the resistance of R49-R50. As with the +5 V supply, the output may be short-circuited indefinitely.

Note that, if you employ both sections, with the +5 V unit deriving Q1's gate supply from the voltage doubler in the +12 V unit (D7-D8, C23-C24), the +12 V output must have a load of at least 100 mA so that the voltage on C24 rises to 20 V.

General comments

I built the complete supply unit in two sections, mounted on double-sided blank pc board. The ICs and components surrounding the drivers I mounted on Veroboard and the high current circuitry I hardwired on pieces of blank pc board. The accompanying photographs show views of the completed unit.

The BUZ71 SIPMOS FETs, transformer T1 E-core assembly, RM10 potcores and the computer grade electrolytics were all obtained from my local Siemens agent in Adelaide, R. G. Pank (See p. 48, January issue for the Siemens agents in other states — Ed.) The solid tantalum capacitors were TAAD 100M20V types, obtained from C. L. Burton in Adelaide.

CHOKE & TRANSFORMER WINDING DETAILS

L2
Inductance, approx. 30uH

Wound on Siemens RM10 assembly:
Former B65814-A1011-D1
Core B65813-J-R47
put 0.2 mm paper between core for "gap"
14 turns, 1.25 mm enamelled copper wire

L4, L5:
Inductance of each, approx. 30 uH
14 turns, 1.25 mm enamelled copper wire.

L6, L7:

Inductance of each, approx. 200-500 uH
Wound on Siemens RM10 assembly:
Former B65814-A1011-D1
Core B65813-J-R47
put 0.2 mm paper between core for "gap"
50 to 60 turns (not critical), 0.5 mm enamelled copper wire.

L1, L3, L8 & L10:
10 turns of 1.25mm enamelled copper wire over short length of ferrite rod.

L9:
20 turns of 0.5 mm enamelled copper wire over short length of ferrite rod.

T1:
Siemens ferrite core assembly:
B66339-G-X127(1001Z1)

Primary ..... 2x6 turns, 1.25 mm wire.*
Secondary 1 ..... 2x9 turns, 1.0 mm wire.*
(12 V/3 A output)
Secondary 2 ..... 2x6 turns & 2x5 turns,
(-12 V & -5 V outputs) 0.5 mm wire.*
*all enamelled copper wire.

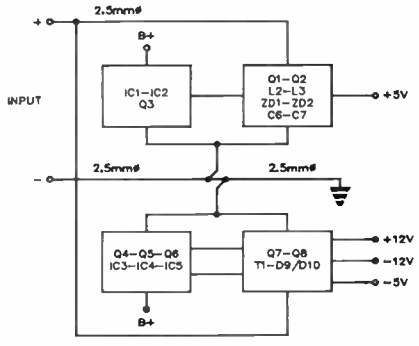

Figure 3.

Standby battery

Attachments of the standby battery is detailed in Figure 2. This permits trickle charging while the mains is operative and automatic switch-over upon mains failure. Note the use of a low voltage drop Shottky diode in series from the battery positive terminal.

Heavy wiring

Some heavy gauge wiring is necessary, in order to carry the high currents around sections of the circuitry. I used 2.5 mm (wire) diameter multi-strand cable for the interconnections detailed in Figure 3.

World Radio History

3SK121
n-channel low-noise UHF GaAsFET

ELECTRICAL CHARACTERISTICS (at Ta = 25°C)

Maximum Ratings

Drain-Source voltage
V_{DS} . . . . . 10 V

Gate-Source voltage
V_{GSO} . . . . . –6 V

Drain Current
I_D . . . . . 50 mA

Power Dissipation
P_d . . . . . 200 mW

Channel Temperature
T_{ch} . . . . . 125° C

Device Characteristics

Gate 1/Gate 2 Cutoff current
I_{G1SS}/I_{G2SS} . . . . . –20 uA
at V_{GS} of –5 V

Drain-Source current
I_{DSS} . . . . . 20 mA (min.), 45 mA (max.)
at V_{DS} of 5 V, V_{G1S}/V_{G2S} of 0 V

Gate 1/Gate 2-to-Source Cutoff voltage
V_{P1}/V_{P2} . . . . . –4 V (max.)
at I_D of 100 uA, V_{DS} = 5 V, V_{G2S} = 0 V

Transconductance
g_m . . . . . 17 milliSiemens
at I_D = 10 mA, V_{DS} = 5 V, V_{G2S} = 0 V

Input Capacitance
C_{is} . . . . . 0.9 pF (typ.)/2 pF (max.)
at I_D of 10 mA, V_{DS} = 5 V, V_{G2S} = 0 V

Feedback Capacitance
C_{rs} . . . . . 0.02 pF (typ.)/0.05 pF (max.)

Noise Figure
NF . . . . . 1.5 dB (typ.)/2.5 dB (max.)
at 800 MHz, V_{DS} = 5 V, V_{G2S} = 1 V, I_D = 10 mA

Power Gain
PG . . . . . 20.5 dB (typ.)/16 dB (min.)

Package . . . . . stripline (see drawing)

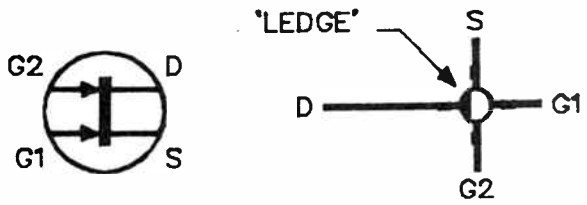

3SK121
TOP VIEW

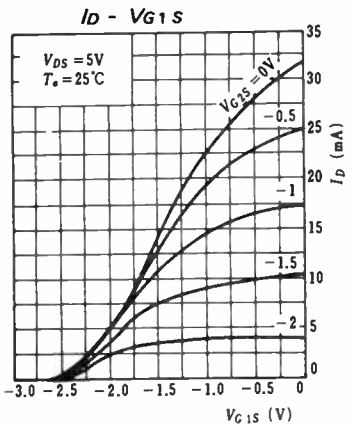

"The data presented here has been extracted, with permission, from the *FET Manual*, published by CQ in Japan and available in Australia through Imark Pty Ltd, 167 Roden Street, West Melbourne 3003; (03) 329 5433. The FET Manual is one of a series of 13 covering Japanese semiconductors. Each costs $12.50 plus $5.00 post and packing charge for one to all 13 manuals, from IMARK."

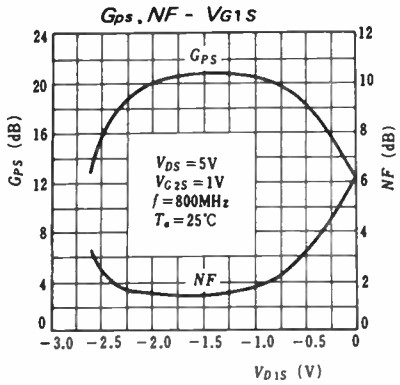

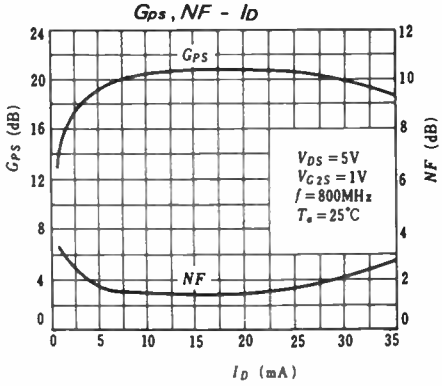

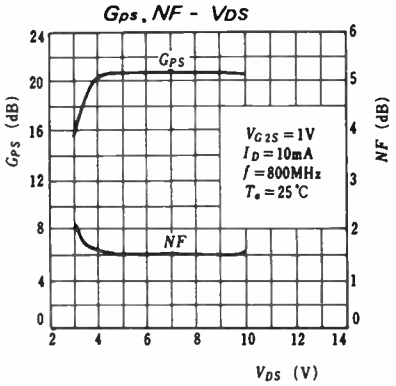

World Radio History

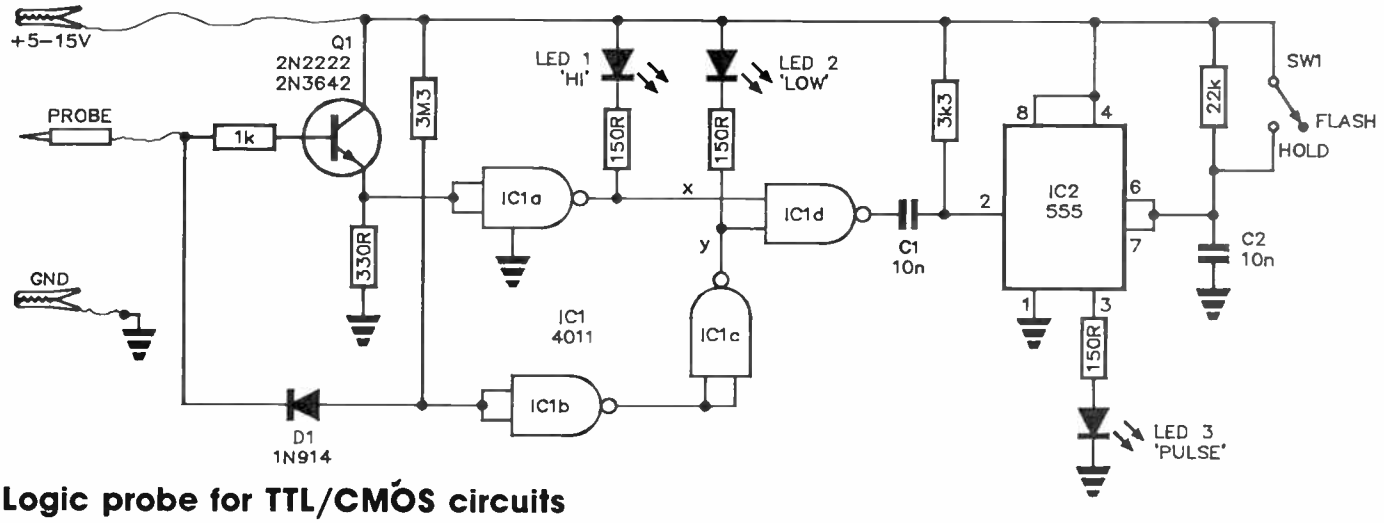

Logic probe for TTL/CMOS circuits

This handy logic fault-finding instrument will prove its worth many times over around the experimenters' workshop. It will work with both TTL and CMOS logic and has three LED indicators: one to show logic high, one to show logic low and one to show pulses. With the latter, you can 'hold' a single pulse (such as is necessary when detecting glitches), or 'stretch' pulses and have the LED flash — once for a single pulse, repetitively for a pulse train.

The circuit is straightforward. A high (about +3-15 V) on the probe turns on Q1, causing the inputs of IC1a (one gate from a 4011 quad NAND gate, connected here as an inverter) to go high and its ouput low, turning LED1 on. Diode D1 blocks the high input from the input of IC1b. A low on the probe (between 0 and about +2.0 V) turns Q1 off and pulls the inputs of IC1b (connected here as an inverter, as is IC1c) low via D1, causing the output of IC1c to go low, turning on LED2.

The 'pulse' indicator works like this: with SW1 open, a positive-going pulse on the probe will cause LED1 to flash for the duration of the pulse (which may be only microseconds long, in which case you're unlikely to see it). Initially, both inputs of IC1d will be high (pulled up via LED1 and LED2) and the output low. Capacitor C1 will be charged to the supply rail (via the 3k3 resistor). This pulls pin 2 of IC2 (a 555 timer) high, which holds its output low and thus LED3 off. When the pulse occurs, the x input of IC1d goes low and a positive-going pulse appears on the output of IC1d, discharging C1. This will ensure pin 2 of IC2 is grounded at the end of the pulse, which resets pins 6 and 7 discharging C2, and the 555's output will go high, lighting LED3 while C2 charges — which takes about 200 ms. With SW1 closed, the output of IC2 will 'latch' on when pin 2 is grounded.

With a negative-going pulse, inputs x and y of IC1d will be low and high respectively, while its output will be high, C1 will be discharged and pin 2 of IC2 will be held high via the 3k3 resistor, holding pin 3 low and LED3 off. With SW1 open, the incoming pulse will 'flip' the x and y inputs of IC1d (LED2 will flash) which will momentarily 'glitch' the output of IC1d (because of the delay in IC1b and c), momentarily pulling down pin 2 of IC2, resetting pins 6 and 7, causing LED3 to flash for about 200 ms. With SW1 closed, LED3 will latch on with a negative-going input pulse.

G. Moss,
Newtown NSW

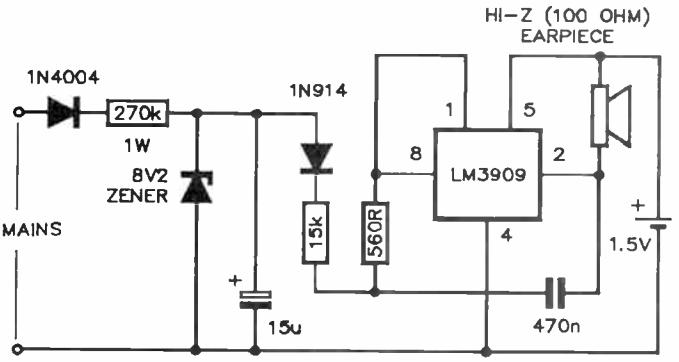

'Mains-failed' alarm

There are many applications these days that require indication of mains failure. This simple alarm circuit can be built-in to equipment requiring such a facility.

The mains is rectified by the 1N4004 and regulated by the 8.2 volt zener. The 15 uF capacitor provides some smoothing. This voltage 'holds off' the LM3909 alarm oscillator via the 1N914.

When a mains failure occurs, the 15u capacitor discharges and grounds the anode of the 1N914, turning the LM3909 oscillator on. The output is from a high impedance earpiece (an earpiece from a discarded telephone is great!). The circuit is powered from a 1.5 V battery. It draws little power when not triggered, so the battery should last virtually its shelf life. You could use a 3 V lithium battery for a longer life.

—L. Dean
Annandale, NSW

Benchbook is a column for circuit designs and ideas, workshop hints and tips from technical sources of the staff or you — the reader. If you've found a certain circuit useful or devised an interesting circuit, most likely other readers would be interested in knowing about it. If you've got a new technique for cutting elliptical holes in zippy boxes or a different use for used solder, undoubtedly there's someone — or some hundreds — out there who could benefit from you knowledge.

We'll pay from $10 to $100 for each item published. Send your gems to **'Benchbook', Australian Electronics Monthly, PO Box 289, Wahroonga NSW 2076.** Please include your postal address for publication with your item(s).

As far as reasonably possible, material published in Benchbook has been checked for accuracy and feasibility etc, but has not necessarily been built and tested in our laboratory. We cannot provide constructional details or conduct correspondence or technical enquiries.

World Radio History

The Australian Electronics Monthly

SUBSCRIBE NOW AND RECEIVE A SPECIAL FREE GIFT

When you subscribe to Australian Electronics Monthly, not only do you receive the brightest, most informative and most useful magazine around, but we'll give you a free gift of your choice!
Fill in the subscription form here, post it to us and we'll start your subscription from the next issue and send you your free gift.

GIFT CHOICE 1 A set of C. K. Allen Keys. Top West German quality. These little beauties are always in need and come in nine different sizes. They're ideal for anyone with an interest in electronics.

Not actual size

GIFT CHOICE 2 Best quality West German screwdrivers from C.K.
We use these in our laboratory and consider them excellent as they are specifically designed for eletronics requirements.

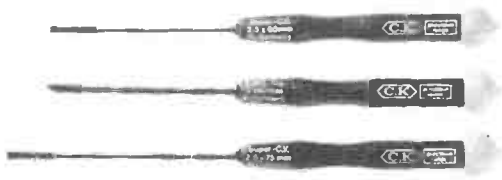

GIFT CHOICE 3 **$10 Gift Voucher**

If you elect to take our Subscribers' Gift Voucher, you can use it to get a $10 discount when you purchase any item or items by mail order or in-store from any of your favourite electronics or computer retailers honouring the voucher when you make a purchase in excess of $20. This offer is currently available from Jaycar, All Electronic Components, Applied Technology and Magraths.

GIFT CHOICE 4 A pack of 23 selected 74LS ICs to the value of approx. $27. This super pack contains the most common ICs, and are ideal for design, servicing, project construction, etc.

Please post to Australian Electronics Monthly PO Box 289 Wahroonga 2076

Please forward me 12 issues of Australian Electronics Monthly and the gift GIFT CHOICE 1 ☐ GIFT CHOICE 2 ☐ GIFT CHOICE 3 ☐ GIFT CHOICE 4 ☐

All cheques or money orders should be made payable to Australian Electronics Monthly.

Price for subscription is $39.60 NZ $A65 airmail

Please tick payment method Cheque/money order ☐ Bankcard ☐ Visa ☐ Mastercard ☐ American Express ☐

Card No. . . . . Expiration . . . . .

Signature . . . . . (Note Unsigned credit card orders cannot be accepted)

Name . . . . .

Address . . . . .

. . . . . Post Code . . . . .

Allow a minimum of 4 weeks delivery of your gift

World Radio History

base into a decimal number is simply an extension of the above method, namely to expand the given number using the appropriate digit weight.

Worked Example 4

Convert 1001011_2 to decimal:

$$1001011_2$$
$$= 1 \times 2^6 + 0 \times 2^5 + 0 \times 2^4 + 1 \times 2^3 + 0 \times 2^2 + 1 \times 2^1 + 1 \times 2^0$$
$$= 1 \times 64 + 0 \times 32 + 0 \times 16 + 1 \times 8 + 0 \times 4 + 1 \times 2 + 1 \times 1$$
$$= 64 + 0 + 0 + 8 + 0 + 2 + 1$$
$$= 75_{10}$$

Worked Example 5

Convert 7516_8 to decimal:

$$7516_8 = 7 \times 8^3 + 6 \times 8^2 + 1 \times 8^1 + 5 \times 8^0$$
$$= 7 \times 512 + 5 \times 64 + 1 \times 8 + 6 \times 1$$
$$= 3584 + 320 + 8 + 6$$
$$= 3918_{10}$$

Worked Example 6

Convert $A6F_{16}$ to decimal:

$$A6F_{16} = A \times 16^2 + 6 \times 16^1 + F \times 16^0$$
$$= 10 \times 256 + 6 \times 16 + 15 \times 1$$
$$= 2560 + 96 + 15$$
$$= 2671_{10}$$

Conversion from one non-decimal to another non-decimal base

While it is possible to directly convert a number from one non-decimal base to another non-decimal base, the need for such a direct conversion is generally small, unless a person is deeply involved in specialised computer work including "machine language". On the rare occasions when you would be faced with such a task, the conversion could be readily carried out in a two-step operation, passing through the decimal number system and applying the knowledge gained so far.

Expressing numbers smaller than unity

For the sake of simplicity, the representation of numbers smaller than unity (that is, of decimals) in other than the decimal number system has not been considered so far.

Number smaller than unity are expressed in the various number systems in extending the power of the base (when progressing from the left towards the right) from whole positive numbers, through unity and zero into increasing negative powers of the base.

Thus, in the decimal system:

$10^1 = 10$; $10^0 = 1$; $10^{-1} = 0.1$; $10^{-2} = 0.01$ etc.

In the binary system:

$2^1 = 2$; $2^0 = 1$; $2^{-1} = 0.5$; $2^{-2} = 0.25$; $2^{-3} = 0.125$ etc.

In the octal system:

$8^1 = 8$; $8^0 = 8^1 = 0.125$; $8^{-2} = 0.015825$ etc.

In the hexadecimal system:

$16^1 = 16$; $16^0 = 1$; $16^{-1} = 0.0625$; $16^{-2} = 0.0039062$ etc.

Example: $14.625 = 1110.101_2$

— from page 87

Hardware hints

The use of RF chokes for RFI suppression and a trimpot to vary the input level for the Listening Post decoder, as suggested by Neil Duncan in the January issue, pages 56-57, would be wise additions. Likewise, build it in a metal box. The receiver ground should then only be via the input RCA socket, the computer ground only via pin D on the pc board — which effectively separates the two for 'RF noise' signals by an RF choke.

Keep your computer some two to five metres away from your receiver. Not only the computer, but the video monitor will radiate RF interference into your receiver. Locate the Listening post decoder near the computer and use a long shielded lead between it and the receiver's audio output. The lead from the decoder to the computer should be kept quite short. Use **coaxial cable** between the antenna and the receiver's antenna input, connected with a proper coax connector, and mount your antenna well away from the listening position and computer.

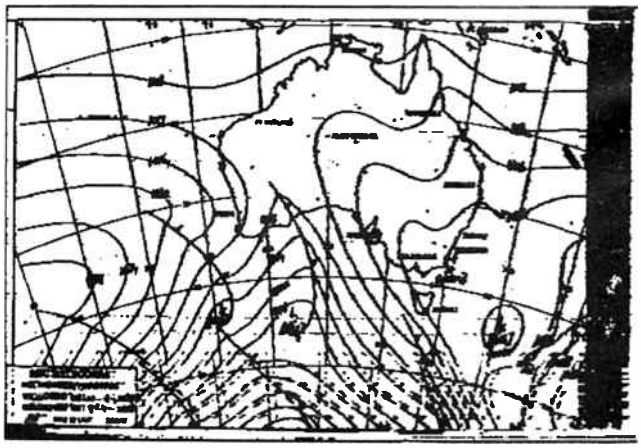

What happens when the ionosphere goes wrong! The above FAX picture (from the Microbee Listening Post) deteriorates in the lower half as multipath reception develops (note the 'ghosting') during the latter third of the picture's transmission period.

World Radio History

software review

— from page 81

number at $949:3BF89". After a lot of frowning, I fnally figured out that what it meant was that the disk I was trying to write to had a write-protect tab on it. Okay, so it was my fault, couldn't it manage to be a little less cryptic?

The software is even clumsy when there's nothing wrong. In order to change the number of re-tries from eight (the default value) to four, you have to go to a particular menu and type 04. Typing 4 gives you 48 retries. Worse, having typed 4 and seen your mistake, typing 04 will not fix it. It's all very frustrating.

A lot of effort and very little thought has gone into the interface it seems, it plays a litle tune + totally 7 useless and annoying and a waste of programmer's time and energy.

Sometimes — when retrying a read for example — the screen will go blank and nothing will be seen until the next error happens. That's because the programmer forgot to refresh the screen with the latest status information after he blanked to get rid of the menu.

Turnover even has my least favorite mistake Interaction - flashing messages. Try reading new line message which is flashing on and off and you'll see what I mean.

All in all, it looks like an IBM package written by Apple programmers which, on reflection, I suppose it is.

Summarising . . .

But when all's said and done, at least it works. And if you're desperate to get your Apple files off disk, that's all that should concern you. However, be warned that the process is slow. It takes about a second to read each record of a CP/M file, for example, so that converting a whole disk (including time for fiddling with the software) may take an hour or two. But, I suppose you only have to do it once per disk of your files.

The documentation for the package is okay, the best aspect of it being the neat little plastic library box that the whole thing comes in. This means that you can pack it away when you're not using it, which if you're lucky, will be most of the time.

The worst aspect of the documentation is strongly reminiscent of the worst aspect of the software. There's a mound of detail about how to work the user interface! However, at least everything is there.

On the whole, Apple Turnover is a solution to a problem. It's not perfect, but since the only alternative involves a length of cable and two RS-232 interfaces (and I don't mean to hang yourself with), the Turnover will be welcome to many Apple/IBM converts. Eat your heart out, Mr Stephen Jobs.

Apple Turnover is compatible with Apple-DOS, Softcard CP/M, Apple III DOS and Apple II Pascal formats. It requires 192K of memory and two disk drives (one of which may be a hard disk). Review package supplied by LOGO computers, 305 Henry Lawson Business Centre, Birkenhead Point, Sydney NSW. (02) 819 6811.

letters

Project pricings

Dear Sirs,

Two welcome features of your projects are much appreciated, the assignment of a "level" and the recommended pricing with the parts lists.

However, I note that kit suppliers on occasion don't stick to the recommended pricings. I guess it's fair enough if a kit is below the price you put on a project, provided it's complete as described, but in enquiring about a couple of your recent projects, I was shocked to be quoted a price well above your recommendation. Can't you do something about this?

C. Wilson,
Kogarah NSW

Thanks for the kind comments on the two 'features' of our projects. Firstly, the "level" and "Estimated Cost" are included with projects ***purely as a guide.*** *We realise there will inevitably be some latitude, particularly in the Estimated Cost. This feature is* ***not a 'recommendation'****. It seems a number of readers, and the occasional advertiser, have fallen into the trap of assuming this.*

The Estimated Cost included at the end of project parts lists is generally arrived at by costing the individual components from the various published retailer's catalogues current advertisements etc. We indicate a ***range*** *in the Estimated Cost which reflects the variations in component prices between competitive suppliers and allows for some price fluctuation between the time the project is designed and the issue month in which it appears. Where components are used that are not currently included in these catalogues we seek to obtain a retail price, or estimated retail price, from the supplier or distributor and attempt to allow for currency or other cost variations in advance, where applicable.*

On some occasions, rapid fluctuations (usually sharply upwards!) will place our estimates somewhat off-target. On other occasions a particular supplier may choose to 'enhance' the project with higher quality components in some areas, in which case you're offered improved value for money — but that's up to you, the individual purchaser, to assess.

For us to determine and recommend a retail price, or price range, for projects that may be offered by suppliers would be unethical, anti-competitive and viewed as a restrictive trade practice.

Roger Harrison

PROGRAMMABLE POCKET SCANNER

—MICROCOMM—
SX-155

PROFESSIONAL POCKET SCANNER WITH OVER 16,000 CHANNELS & 160 MEMORIES

26 to 32, 68 to 88, 138 to 176 and 380 to 514 MHz

The Microcomm SX 155 represents the latest developments in State-of-the-art LSI CMOS technology as applied to scanning monitor receivers. It incorporates many features, a lot of which are not even found in today's larger base scanners.
For example the SX 155 has 160 memory channels which can be programmed in either of two modes. The first allows you to manually program the entire 160 channels. The second mode provides for manual programming of the first 40 channels with the top 120 reserved for use by the SX 155 while in its SEARCH mode. It uses these channels to automatically store frequencies on which it has found signals during the search phase.
The SX 155 also features a Priority Channel (for that important frequency). An LCD display providing readout of all receiver functions including an accurate crystal controlled 24 hour clock.
Supplied complete with rechargeable Nicad batteries, charger, and rubber duck antenna, the SX 155 is a must for anybody with an interest in monitoring.

PRICE $449
+ $14 P & P

AUSTRALIAN DISTRIBUTOR
GFS ELECTRONIC IMPORTS
Division of DERIBAR PTY LTD
17 McKeon Road, Mitcham, Vic. 3132
PO Box 97, Mitcham, Vic. 3132
Telex: AA 38053 GFS
Phone: (03) 873 3777 3 Lines

World Radio History

The Last Laugh

THE ART OF MORSE CODE communications is not yet dead in this world of high speed wideband digital transmission. Like handmade pottery, long since deposed as a life supporting craft by more efficient mass production methods, it survives now largely through the nurturings of skilled lovers of its forms and techniques who practice the ancient skills for the pleasures it brings as their only reward. Radio amateurs (from the Latin *amare*, to love) the world over are the living curators of the art and craft of Morse code communications.

And just as there is rivalry and mutual appreciation of skill among modern potters, so there is among modern Morse operators.

A certain radio amateur with a relatively prominent position in the public service happens to be a keen and well-known Morse aficionado, regularly found on the HF amateur bands in his spare time. One day, after completing a contact at a leisurely 12-15 words per minute (wpm) with some long-distant station, he was called by a local station, a callsign he had not heard or worked before. "Obviously a new licensee," he noted mentally to himself, "but what a wonderful fist."

Now, practitioners of the Morse code art are able to identify each other by their 'fist', the cadence of their sending of the dots and dashes, just as we can distinguish each others' voices. They still use hand keys (nothing more than a finely-crafted, spring-return lever with contacts closed by downward hand pressure) to actually send the dots and dashes although the transmitter control may be entirely electronic. Occasionally, particularly among aficionados of the art, you'll find 'bug' keys — mechanical or electronic devices with sideways-operated 'paddles'. Hit the left one momentarily and it will send a single 'dot', the right a single 'dash'. Hold a paddle down and it will send a string of dots or dashes, as required. Just the thing for high-speed aficionados. These days, computers are encroaching on this domain, but this story comes from before the days when computers made their mark.

Apparently, this newcomer with a well-tempered fist, first called the aficionado at quite a slow speed — around 5 wpm. So, the Morse aficionado slowed down, as any 'gentleman' would, to accomodate the newcomer. After exchanging the usual signal reports, rig details etc, the newcomer indicated he'd like to try a faster pace — 7 wpm. Obligingly, the aficionado increased speed. After chatting back and forth on the dots and dashes for some minutes, the newcomer obviously gained confidence and requested another speed increase — 10 wpm. Once again, obligingly the aficionado brought up his pace and marvelled at how well the newcomer managed to maintain the even temper of his 'fist'. He couldn't restrain himself from commenting and flattered the newcomer on his competence.

As they chatted — dit-dit-dit dah, dit-dah dah dit — the newcomer kept requesting "QRQ" (amateurs' Q-code, a sort of shorthand, meaning 'send faster'). When they reached a speed of around 18-20 wpm, the aficionado changed from his hand key to his 'bug' key, conveniently screwed to the table near the ordinary hand key. Marvelling at the newcomer's skill, the aficionado tentatively sent "QRQ?" (Q-code for 'shall I send faster?'). Back came the newcomer — 24 wpm.

It rankled a little when the newcomer indicated to the aficionado that he'd made several mistakes in his last transmission, so the aficionado challenged the newcomer again: "QRQ — 26 wpm?" At this pace, the aficionado's table began to wobble visibly under the strain of the vibrations, his brow was beaded with perspiration and his normally calm, collected manner was showing distinct signs of tension; too few or too many dots or dashes in the wrong place (making gibberish), uneven character and word spacing, etc — and that blasted newcomer was *still* sending impeccable code! He was thankful, but did not indicate such, when the newcomer signed off. Nevertheless, despite a sheepish feeling of chagrin, he still marvelled at the newcomer's impeccable fist when he heard him from time to time on the air. And at club gatherings and during on-air roundtable 'nets' with groups of stations, he would sing the praise of the newcomer.

They ocasionally made contact on the air from time to time after that, generally at around 20 wpm, and the aficionado continued to marvel at the (now, not so new) newcomer's wonderful fist.

Some years later, the aficionado was approached at a radio club meeting by a fellow who announced himself by first name and callsign — it was the newcomer-with-impeccable-fist! An embarrassed, but nonetheless genuine, effusion of compliments poured forth from the aficionado.

"I've a confession to make", said the newcomer, loudly, in front of the gathering. The aficionado was puzzled, but had a slight sinking feeling in the pit of his stomach.

"I've been using a computer all these years", he said. "My 'wonderful fist', is made of silicon"!

World Radio History

PCB WORKSHOP TOOLS

60W IRON WITH CONTINUOUS TEMPERATURE ADJUSTMENT

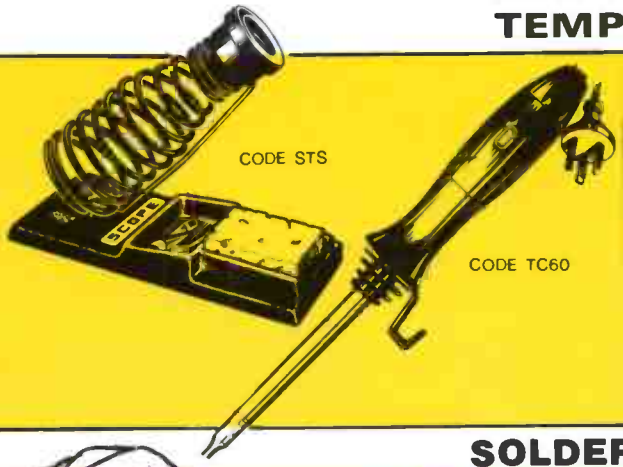

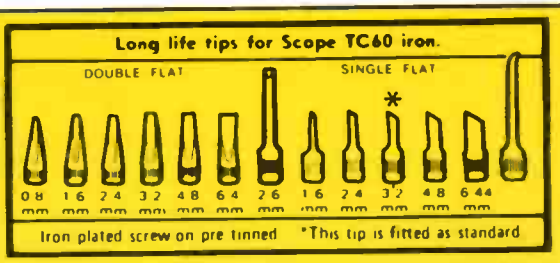

1. Heats in 45 seconds.
2. Dial any temp. 20°-400°.
3. Plugs direct to mains. No transformer needed.
4. Iron plated tips from 0.8mm to 6.4mm.
5. Safety Stand available.

SOLDER BLOTTER That Avoids Burnt Fingers

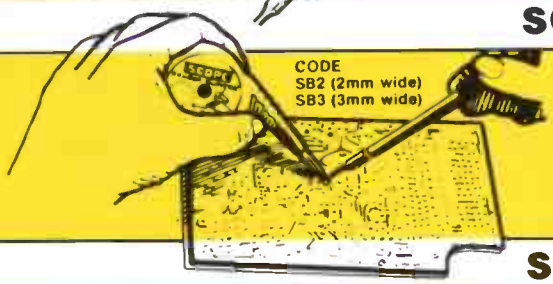

1. Full 2 metre length/30% more than most brands
2. Avoid Burnt Fingers with Wind Back Dispenser
3. Because Metal Tipped Container keeps Fingers away from Iron Tip.
4. Heat resist nozzle dispenser locates tape positively
5. Plastic dispenser avoids short circuits

SOLDER REMOVER Metal Body - Self Cleaning

Anti Static Model Available.

1. Avoids the cost of 'Desolder Braid'.
2. The heat resistent extended nozzle penetrates
3. The solid metal body resists crushing better than the plastic equivalent
4. Self cleaning 5. Safety guard protects faces.

FLUSHCUTTERS Designed for production use.

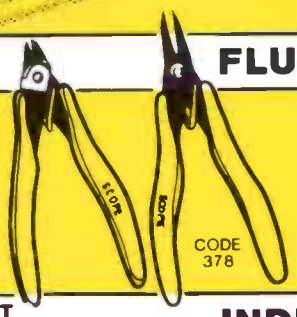

1. Slice action reduces fatigue
2. Cusion grip spring loaded handles mean real user comfort.
3. Models feature safety catcher which holds offcut till released.
4. Model 378 Long Nose (25mm) plier thin profile — serrated jaws.

INDEXING PCB HOLDER Locks in 32 Positions

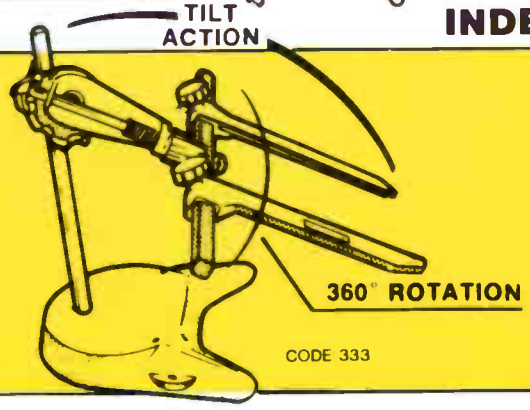

1. Rotates and locks in 45° increments
2. Tilts and locks at 4 angles-vertical, 45° - 90° - 120°
3. Offers 200mm of vertical adjustment to the work height
4. Has a heavy cast iron base with bench mounting holes.
5. Retains the quick loading facility of spring mounted arms to hold the PCB
6. Offers cross bars to 750mm for large or multiple board work using extra sets of arms

Magnifier Attachment Available

N.S.W.
Bennett Electronics (062) 80 5359
A E Baker & Co Pty Ltd (02) 621 0044 AA26788
J Boomer & Co Pty Ltd (069) 21 4644
George Brown (02) 519 5855
Sheridan Electronics (02) 699 6912
Martin De Launay Pty Ltd (02) 267 1055 AA26679
David Reid (02) 267 1385

S.A.
Bee Jay Electronics (08) 352 5959
Gerard & Goodman Pty Ltd (08) 223 2222 AA88983

QLD.
Dudley Marshall (07) 779 3855
L E Boughen (07) 369 1277
Dunlop IBC (07) 392 0011 AA41561
St Lucia Electronics (07) 52 7466 AA42883

W.A.
Atkins Carlyle Ltd (09) 321 0101 AA93750
Pro Spec (09) 362 5001

VIC.
Aust School of Electronics (03) 523 5622
Ballarat Electronics Supplies (053) 31 1947 AA37435
Radio Parts Group (03) 329 7888 AA32980
Teleparts Investments Pty. Ltd. (052) 21 7085
McGraths Electronics (03) 347 1122 AA31001
Middendorp Electric Co Pty Ltd (03) 328 3233 (plus branches)
Mektronics (03) 690 2650
Electrotool (03) 848 1045
Active Electronics (03) 67 1312

SCOPE
BOX 63 NIDDRIE
VIC 3042
TEL (03) 338 1566
TLX AA38318

World Radio History

New IC-R7000

Introducing a Professional Scanning Receiver at an Affordable Price.

25-1000 MHz Plus! frequency coverage

(no additional module required for coverage to approx. 2.0 GHz.)

ICOM announce a scanning receiver that offers professional performance with IC-R7000 advanced technology – 25-1000MHz coverage, multimode operation and a sophisticated scanning and recall system.
IC-R7000 covers aircraft, marine, business, FM/AM broadcast, amateur radio, emergency services, government and television bands.

ICOM IC-R7000 has many outstanding features.

- **99 MEMORIES:** You can store up to 99 of your favourite frequencies for instant recall. Memory channels can be called up by simply pressing the memory channel knob or direct through the keyboard.
- **KEYBOARD:** Tuning can be quickly achieved by selecting precise frequencies directly through the IC-R7000 keyboard or by turning the main tuning knob.
- **SCANNING:** Instant access is provided to commonly used frequencies through the scanning system. The Auto-M switch enables signal frequencies to be memorized while the IC-R7000 is in the scanning mode. Frequencies that were in use can be recalled at the operator's convenience.
  An optional voice synthesizer automatically announces the scanned signal frequency to ease problems with logging.
- **MULTI MODE:** Push button selection enables FM wide/FM narrow/AM/SSB upper and lower modes to be received.
- **6 TUNING SPEEDS:** 0.1, 1.0, 5, 10, 12.5 and 25 kHz through knob selection.
- **ADVANCED TECHNOLOGY CONSTRUCTION:** The IC-R7000 has dual colour fluorescent display with memory channel readout and dimmer switch.
  Dial lock, noise blanker, combined S-meter and centre meter. Optional RC-12 infra red remote control operation. All the above professional features are produced in a convenient, compact unit of size:

Height	282mm
Width	286mm
Depth	276mm

- Specifications guaranteed from 25-1000MHz and 1260-1300MHz.
  No additional module is required for coverage to approximately 2000MHz. No coverage is available from 1000-1025MHz.

Please send me details on: ICOM 3353

☐ IC-R7000 ☐ ICOM's full range of communications equipment.

Senders details:

NAME _____

ADDRESS _____

_____ POSTCODE _____

PHONE: _____ (BUSINESS) _____ (HOME)

POST TO: ICOM, 7 DUKE STREET, WINDSOR, VICTORIA, 3181. PH: (03) 529 7582.

All stated specifications are approximate and subject to change without notice or obligation. ICOM customers should be aware of equipment not purchased at authorized ICOM Australia Agents. This equipment is not covered by our parts and labour warranty.

ICOM

The Frequency of Ideas.

World Radio History