15 51

THE Radio Constructor

RADIO
TELEVISION
AUDIO
ELECTRONICS

VOLUME 18 NUMBER 4
A DATA PUBLICATION
TWO SHILLINGS & THREEPENCE

November 1964

THE *Constructor's* PORTABLE SIX *TRANSISTOR RECEIVER*

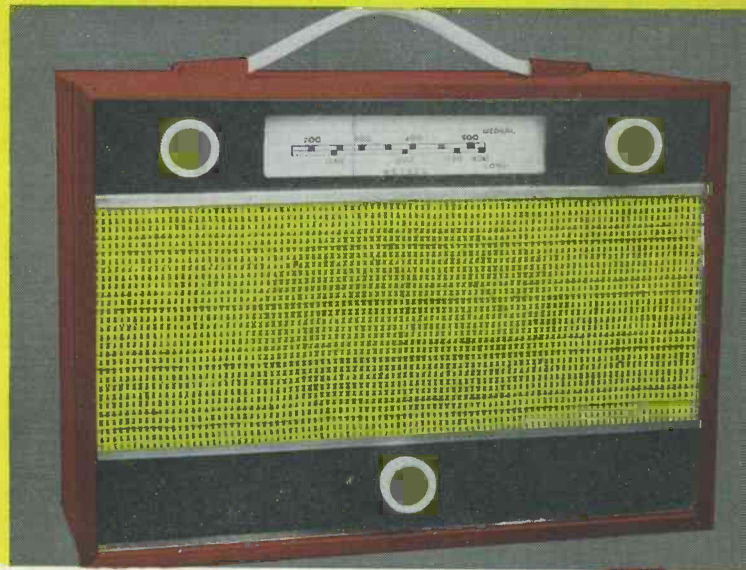

Transistorised Capacity Tester ★ Door Chime Repeater ★ FM Tuner with Pulse Detector ★ Simple Quality Oscilloscope

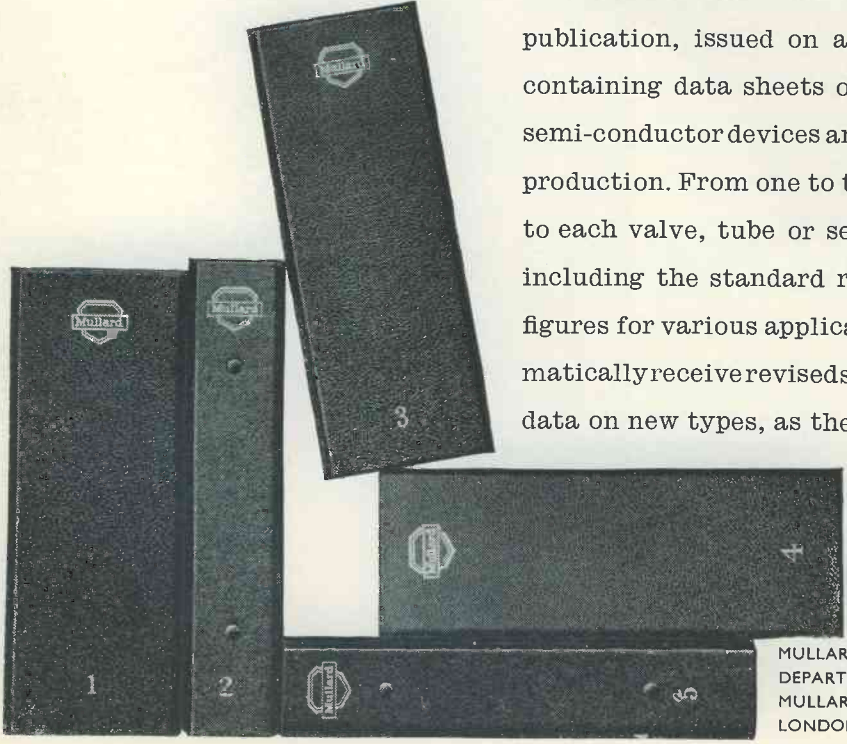
Mullard
Mullard
Mullard
Mullard
Mullard
1
2
3
4
5

LASKY'S RADIO

FOR THE FINEST RANGE OF TRANSISTOR RECEIVERS

We consider our construction parcels to be the finest value on the home constructor market. If on receipt you feel not competent to build the set, you may return it as received within 7 days, when the sum paid will be refunded, less postage.

THE SKYROVER AND THE SKYROVER DE LUXE

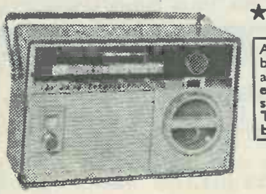

★ LONG WAVEBAND COVERAGE IS NOW AVAILABLE FOR THESE WELL-KNOWN SETS

A simple additional circuit provides coverage of the 1100/1950 M. band (including 1500 M. Light programme). This is in addition to all existing Medium and Short wavebands. All necessary components with construction data. **Only 10/– extra** **Post Free**

This conversion is suitable for both models that have already been constructed.

GENERAL SPECIFICATION. 7 transistor plus 2 diode superhet, 6 waveband portable receiver. Operating from four 1.5V torch batteries. The SKYROVER and SKYROVER DE LUXE cover the full medium waveband and short waveband 31–94 M, and also 4 separate switched band-spread ranges, 13 M, 16 M, 19 M and 25 M, with band-spread tuning for accurate station selection. The coil pack and tuning heart is completely factory assembled, wired and tested. The remaining assembly can be completed in under three hours from our easy to follow, stage by stage instructions.

SPECIFICATION: Superhet, 470 kc/s. All Mullard transistors and diode. Uses 4 U2 batteries. 5" Ceramic Magnet P.M. Speaker. Easy to read Dial Scale. Band-spread Tuning. 500mW Output. Telescopic Aerial and Ferrite Rod Aerial.

WAVEBAND COVERAGE: 180–576 M, 31–94 M, and band-spread on 13, 16, 19 and 25 metre bands.

All components available separately. Four U2 batteries 3/4 extra. Data for each receiver, 2/6 extra, refunded if you purchase the parcel.

THE SKYROVER

Controls: Waveband Selector, Volume Control with On/off Switch, Tuning Control. In plastic cabinet, size 10" x 6½" x 3½", with metal trim and carrying handle.

Can now be built for **£8.19.6**

P. and P. 5/– extra

H.P. Terms:—20/- dep. & 11 months at 16/6

THE SKYROVER DE LUXE

Tone Control circuit is incorporated, with separate Tone Control in addition to Volume Control, Tuning Control and Waveband Selector. In a wood cabinet, size 11½" x 6½" x 3", covered with a washable material, with plastic trim and carrying handle. Also car aerial socket fitted.

Can now be built for **£10.19.6**

P. and P. 5/– extra

H.P. Terms:—25/– deposit and 11 months at 20/–

REALISTIC SEVEN

★ 7-transistor Superhet. ★ 350 milliwatt output into 4" high flux speaker. ★ All components mounted on a single printed circuit board, size 5¼" x 5¼" in one complete assembly. ★ Plastic cabinet with carrying handle, size 7" x 10" x 3½", available in Blue/Grey. Full L. & M. coverage ★ Easy to read Dial. ★ External socket for car aerial. ★ I.F. frequency 470 kc/s. ★ Ferrite rod internal aerial. Operates from PP9 or similar battery. ★ Full comprehensive data supplied with each receiver. ★ All coils and I.F.s, etc., fully wound ready for immediate assembly.

An Outstanding Receiver. **LASKY'S PRICE** for the complete parcel including Transistors, Cabinet, Speaker, etc., and Full Construction Data. Can be built for: **£5.19.6**

P. and P. 4/6

PP9 Battery, 3/9. Data and instructions separately, 2/6. Refunded if you purchase the parcel. All parts sold separately.

REALISTIC 'Seven' De Luxe

With the same specification as standard model —PLUS a superior wood cabinet in contemporary styling. ALSO a full vision circular dial

FOR ONLY **£1** EXTRA

P. & P. as std. model

LAFAYETTE TAPE

Famous American Brand—Fully Guaranteed at record low prices. In sealed cartons.

5in double play, 1,200ft. Mylar base ...	15/–
5in long play, 900ft. Acetate base ...	10/–
5in standard play, 600ft. PVC base ...	8/6
5¾in long play, 1,200ft. Mylar base ...	15/–
5¾in double play, 1,800ft. Mylar base ...	22/6
5¾in long play, 1,200ft. Acetate base ...	12/6
5¾in standard play, 850ft. PVC base ...	11/6
7in standard play, 1,200ft. Mylar base ...	12/6
7in long play, 1,800ft. Mylar base ...	19/6
7in double play, 2,400ft. Mylar base ...	25/–
7in long play, 1,800ft. Acetate base ...	15/–
3in message tape, 150ft	3/6
3in message tape, 225ft	4/11
3in message tape, 300ft	7/6
3in triple play, 450ft. Mylar base ...	12/6
4in triple play, 900ft. Mylar base ...	22/6
5in triple play, 1,800ft. Mylar base ...	42/6
5¾in triple play, 2,400ft. Mylar base ...	55/–
7in triple play, 3,600ft. Mylar base. ...	75/–

P. & P. 1/- extra per reel; 4 reels and over Post Free.

HI-FI TAPE RECORDER HEADS

High Impedance Record Play. Low impedance erase. Upper or lower track.

LASKY'S PRICE 29/6 Post free per pair. State track required.

MARRIOTT "X" Type ¼ track heads. Record/Play and Erase.

LASKY'S PRICE 4 gns. pair

¼-Track heads Record/Play and Erase 59/6 pair.

TAPE POSITION INDICATOR

Open type—as used by most makers. With re-set knob:

3 DIGIT 7/6; 4 DIGIT 10/6. *P. & P. 9d. on each.*

TRANSISTORS

All New and Guaranteed

GET.S1, GET.S5, GET.S6—2/6; 837A, 874P—3/6; OC.45, OC.71, OC.81D—4/6; OC.44, OC.70, OC.76, OC.81 (matched pair 10/6)—5/6; AF.117, OC.75, OC.171, OC.200—6/6; OC.42, OC.43, OC.73, OC.82D—7/6; OCP.71—9/6; OC.28, OC.201, OC.204—15/–; OC.205, OC.206—19/6; OC.28—24/6.

SINCLAIR SUPER MINIATURES

THE SINCLAIR SLIMLINE

The new 2-transistor pocket radio, size only 2 3/4" x 1 5/8" x 1 5/8". Micro alloy transistors and printed circuit. Easy to assemble.

CAN BE BUILT FOR 49/6

THE SINCLAIR MICRO-6

Self-contained pocket radio. Size only 1 4/5" x 1 3/10" x ½"—truly amazing performance. Without doubt the most advanced transistor circuit ever offered to home constructors—yet may be built in an evening. Complete with earphone and detailed construction data. Mercury cell 1/11 extra (2 required).

CAN BE BUILT FOR 59/6

THE SINCLAIR TR750

Power amplifier—measures only 2" x 2". Full 750mW transformerless output for 10mV into 10kΩ. Built-in vol. control and on/off switch. Ideal for use with Micro-6 or Slimline receivers.

CAN BE BUILT FOR 39/6 **READY BUILT 45/-**

All parts on the above sold sep.

TRANSFILTERS by BRUSH CRYSTAL CO.

TO-01B 465 kc/s ± 2 kc/s
TO-01D 470 kc/s ± 2 kc/s
TO-02B 465 kc/s ± 1 kc/s
TO-02D 470 kc/s ± 1 kc/s
TF-01B 465 kc/s ± 2 kc/s
TF-01D 470 kc/s ± 2 kc/s

6/6 each
P. & P. 6d.

THE SINCLAIR X10

10 watt power amplifier fitted with integrated pre-amp. Requires only 1mV for an output of 10 watts undistorted. Frequency response is flat, ½dB from 5 c/s to 10 kc/s. Size only 6 x 3 x ⅜ in., weight 5 ozs., built on printed circuit. Operates from 12V d.c. at 75µA quiescent. Circuit uses 7 MAT'S and 4 r.f. power transistors. Kit price £5.19.6., ready built £6.19.6. 3 pots. for volume, bass and treble, 7/6d the three extra.

12" FANE DUAL CONE HI-FI SPEAKER

Type 122/17A. Power handling 25 watts—15 ohms imp. Flux density 17,000 gauss. Special Anisotropic magnet. Listed at 12 gns. *Limited stock.*

LASKY'S PRICE £6.19.6 P. & P. 5/–

DEAC RECHARGEABLE NICKEL CADMIUM CELLS

Rating 1.22V 3.5 A.H. at 10 hour rate. 1,001 uses for model makers, miniature electronic equipment, portable radios and tape recs., trans receivers, photo flash, etc. Hermetically sealed. Size 3¼" x 1⅜" x 1⅜". Listed at 35/– each.

LASKY'S PRICE 15/– each

POST FREE. BANK of 9, 79/6.

PICK-UP CARTRIDGES

Crystal P.U. Cartridges complete with stylii—at lowest prices ever!

Mono C.T.I.	4/11
Collaro Type C, stereo, 2 sapphires. ...	15/–
Collel S.C.I. Stereo Diamond LP Sappl: std.	17/6
Sonotone 8T, stereo, 2 sapphires ...	19/11
Sonotone 2TA, mono, 2 sapphires ...	15/–

Postage 1/– each extra.

TAPE DECK MOTORS

Motors for the Collaro Studio Deck — new and unused. 200–250V A.C. Take-up and rewind. Listed at £2 5s. each. **LASKY'S PRICE 14/11 each.** *P. & P. 2/6.*

State motor required when ordering.

High quality tape deck capstan motor made by E.M.I. Holland. Bi-directional. Size: 4" dia., x 2" high. 1" x ¼" spindle.

LASKY'S PRICE 19/11. *P. & P. 3/6.*

RECORDING TAPE SPLICER

By famous manufacturer — all metal construction. Listed at 18/6 **LASKY'S PRICE** 14/6 *Post Free*

33 TOTTENHAM COURT ROAD · W1
2 mins. Oxford St. Nearest Station: Goodge St.
MUSeum 2605

207 EDGWARE ROAD · W2
Few yards from Praed St.
PADdington 3271/2

152/3 FLEET STREET · EC4
(ELECTRONICS Fleet St. Ltd) FLEet 2833.
Open all day Thurs. Closed 1 p.m. Sat.

Tottenham Ct. Rd. & Edgware Rd. addresses open all day Sat. Close 1 Thur. **Please address all Mail Orders to Dept. W at above Edgware Road address**

HI-FI AMPLIFIERS · TUNERS · RECORD PLAYERS


S-33


S-99


AT-6


MA-12

HI-FI 6W STEREO AMPLIFIER. Model S-33. 3 watts per channel 0.3% distortion at 2.5W/chnl., 20dB N.F.B. Inputs for Radio (or Tape) and Gram, Stereo or Monaural, ganged controls. Kit **£13.7.6** Assembled **£18.18.0**

DE LUXE STEREO AMPLIFIER. Model S-33H. De luxe version of the S-33 with two-tone grey perspex panel, and higher sensitivity necessary to accept the Decca Deram pick-up. Kit **£15.17.6** Assembled **£21.7.6**

HI-FI STEREO AMPLIFIER. Model S-99. 18W output. Ganged controls. Stereo/Mono gram., radio and tape inputs. Push-button selection. Printed circuit construction. Kit **£27.19.6** Assembled **£37.19.6**

POWER SUPPLY UNIT. Model MGP-1. Input 100/120V, 200/250V. 40–60 c/s. Output 6.3V, 2.5A A.C. 200, 250, 270V, 120mA max. D.C. Kit **£5.2.6** Assembled **£6.12.6**

A wide range of American equipment available under direct mail order scheme. Full details and catalogue 1/– post paid.

GOLDRING LENCO TRANSCRIPTION PLAYER. Model GL-58. With G-60 pick-up arm and Ronette 105 cartridge. **£20.1.3**

GARRARD AUTO/RECORD PLAYER. Model AT-6. With R 105 cartridge. **£13.12.1** With Decca Deram pick-up **£14.6.1**

SUGDEN MOTOR UNIT "CONNOISSEUR CRAFTSMAN". Heavy duty motor operating at 33⅓ and 45 r.p.m. Very heavy 12" turntable. Virtually no rumble. **£17.2.11**

HI-FI MONO AMPLIFIER. Model MA-5. A general purpose 5W Amplifier, with inputs for Gram., Radio. Presentation similar to S-33. Kit **£10.19.6** Assembled **£15.10.0**

HI-FI MONO AMPLIFIER. Model MA-12. 12W output, wide freq. range, low distortion. Kit **£11.18.0** Assembled **£15.18.0**

Heathkit DAYSTROM *Choose Heathkit models for Performance*

FOR THE INSTRUMENTALIST


PA-1

PA AMPLIFIER PA-1. The ideal compact unit for VOCALISTS, INSTRUMENTALISTS, RECORDS, with 50 Watt output, 2 Heavy Duty Speakers. Variable TREMOLO. Elegant modern cabinet. Kit **£54.15.0** Assembled **£74.0.0**

Legs optional extra 17/6 set of 4

POWER AMPLIFIER MA-50 50W output. Kit **£19.18.0** Assembled **£27.18.0**

ELECTRONIC ORGAN

(Transistorised). Ideal for Soloists, Home use, Groups. FULL 20 WATTS VOLUME. **£187.10.0** Matching bench **£14.10.0** extra.

TRANSISTOR RADIOS

"OXFORD" LUXURY PORTABLE. Model UXR-2. Specially designed for use as a domestic, car or personal portable receiver. Many features, including solid leather case. Kit **14.18.0**


UXR-2

TRANSISTOR PORTABLE. Model UXR-1. Pre-aligned I.F. transformers, printed circuit. Covers L.W. and M.W. Has 7" x 4" loudspeaker. Real hide case. Kit **12.11.0**


UXR-1

JUNIOR EXPERIMENTAL WORKSHOP. Model EW-1. More than a toy! Will make over 20 exciting electronic devices, incl: Radios, Burglar Alarms, etc. 72 page Manual. Kit **£7.13.6**


UJR-1

JUNIOR TRANSISTOR RADIO. Model UJR-1. Single transistor set. Excellent introduction to radio. Kit **£2.7.6**

Money-back Guarantee

Daystrom Limited unconditionally guarantees that each Heathkit product assembled in accordance with our easy-to-understand instruction manual must meet our published specifications for performance or the purchase price will be cheerfully refunded.

TEST INSTRUMENTS

T.V. ALIGNMENT GENERATOR. Model HFW-1. Offers max performance at lowest cost. Covers 3.6 to 220 Mc/s fundamentals. Electronic sweep oscillators. Built in marker generators (5 Mc/s crystal) **£34.18.0** Kit **£44.10.0** Assembled

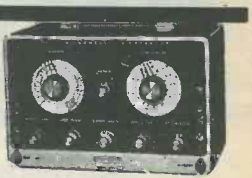
HFW-1

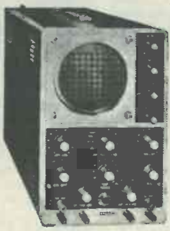
IO-12U

5" GENERAL-PURPOSE LABORATORY OSCILLOSCOPE. Model IO-12U. This outstanding oscilloscope, with its professional specification and styling, fulfills most laboratory and service requirements. Vertical frequency response 3 c/s to over 4.5Mc/s, sensitivity 10mV r.m.s. per cm. at 1 kc/s. T/B covers 10 c/s–500 kc/s. Kit **£32.12.6** Assembled **£41.10.0**

2¾" PORTABLE SERVICE 'SCOPE. Model OS-1. This is a light, compact oscilloscope, ideal for servicing, etc. Dimensions 5"x8"x14½" long. Wt. 10½lb. Kit **£22.18.0** Assembled **£30.8.0**


S-3U

ELECTRONIC SWITCH. Model S-3U (Oscilloscope Trace Doubler). Enables a single beam oscilloscope to give simultaneous traces of two separate and independent signals. Switching rates approx. 150, 500, 1,500, 5,000 and 15,000 c/s. Sig. freq. response 0–100 kc/s. ±1dB. Separate gain controls and sync. output. Sig. input range 0.1–1.8V r.m.s. Kit **£12.18.0** Assembled **£18.10.0**

DE LUXE LARGE-SCALE VALVE VOLTMETER. Model IM-13U. Circuit and specification based on the well known model V-7A but with many worth-while refinements. 6" Ernest Turner meter. Unique gimbal bracket allows operation of instrument in many positions. Modern styling. Kit **£18.18.0** Assembled **£26.18.0**


IM-13U

AUDIO SIGNAL GENERATOR. Model AG-9U. 10 c/s to 100 kc/s, switch selected. Distortion less than 0.1%, 10V sine wave output metered in volts and dB's. Kit **£22.10.0** Assembled **£30.10.0**

VALVE VOLTMETER. Model V-7A. 7 voltage ranges d.c. volts to 1,500. A.c. to 1,500 r.m.s. and 4,000 peak to peak. Resistance 0.1Ω to 1,000MΩ with internal battery. D.c. input impedance 11MΩ. dB measurement, has centre-zero scale. Complete with test prods, lead and standardising battery. Kit **£13.18.6** Assembled **£19.18.6**


V-7A

MULTIMETER. Model MM-1U. Ranges 0–1.5V to 1,500V a.c. and d.c.; 150μA to 15A d.c.; 0.2Ω to 20MΩ. 4½" 50μA meter. Kit **£12.18.0** Assembled **£18.11.6**

R.F. SIGNAL GENERATOR. Model RF-1U. Up to 100 Mc/s fundamental and 200 Mc/s on harmonics. Up to 100 mV output. Kit **£13.8.0** Assembled **£19.18.0**


RF-1U

A WIDE RANGE OF BOOKS ON ELECTRONICS AND RADIO AVAILABLE. SEND FOR LISTS OF PRICES

TAPE DECKS ~ CONTROL UNITS ~ TAPE AMPLIFIERS


COLLARO


D-93


FM-4U


AM/FM

COLLARO "STUDIO" TAPE DECK. The finest buy in its price range. Operating speeds: 1⅞", 3¾" and 7½" p.s. Two tracks, "wow" and "flutter" not greater than 0.15% at 7½" p.s. **£14.19.6**

TRUVOX D93 TAPE DECKS. High quality stereo/mono tape decks.

D93/2, ½ track, **£36.15.0** **D93/4,** ¼ track, **£36.15.0**

HI-FI AM/FM TUNER. Model AFM-1. Available in two units which, for your convenience, are sold separately. Tuning heart (AFM-T1—£4.13.6 incl. P.T.) and I.F. amplifier (AFM-A1—£21.16.6). Printed circuit board, 8 valves. Covers L.W., M.W., S.W., and F.M. Built-in power supply. Total Kit **£26.10.0**

HI-FI FM TUNER. Model FM-4U. Also available in two units. R.F. tuning unit (£2.15.0 incl. P.T.) with I.F. output of 10.7 Mc/s, and amplifier unit, with power supply and valves (£13.3.0). Total Kit **£15.18.0**

TAPE RECORDING/PLAYBACK AMPLIFIER. Thermometer type recording indicators, press-button speed compensation and input selection.
Mono Model TA-1M, Kit **£19.18.0** Assembled **£28.18.0**
Stereo Model TA-1S, Kit **£25.10.0** Assembled **£35.18.0**

MONO CONTROL UNIT. Model UMC-1. Designed to work with the MA-12 or similar amplifier requiring 0.25V or less for full output. 5 inputs. Baxandall type controls. Kit **£8.12.6** Assembled **£13.12.6**

STEREO CONTROL UNIT. Model USC-1. Push-button selection, accurately matched ganged controls to ±1dB. Rumble and variable low-pass filters. Printed circuit boards. Kit **£19.10.0** Assembled **£26.10.0**

Reliability - The kitsets anyone can build

Heathkit
DAYSTROM

"AMATEUR" EQUIPMENT

AMATEUR BANDS RECEIVER. Model RA-1. To cover all the Amateur Bands from 160–10 metres. Many special features, including: half-lattice crystal filter; 8 valves; signal strength "S" meter; tuned R.F. Amp. stage.

Kit **£39.6.6** Assembled **£52.10.0**

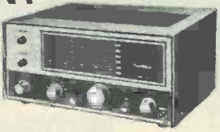
RA-1

THE "MOHICAN" GENERAL COVERAGE RECEIVER. Model GC-1U. With 4 piezo-electric transfilters, variable tuned B.F.O. and Zener diode stabiliser, this is an excellent fully transistorised general purpose receiver for Amateur and Short wave listeners. Printed circuits, telescopic aerials, tuning meter and large slide-rule dial.

Kit **£37.17.6** Assembled **£45.17.6**

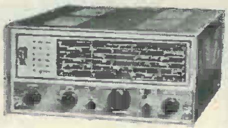
RG-1

160–10M TRANSMITTER. Model DX-100U. Careful design has achieved high performance and stability. Completely self-contained.

Kit **£79.10.0** Assembled **£104.15.0**


SB-10U

COMMUNICATIONS TYPE RECEIVER. Model RG-1. A high performance, low cost receiver for the discriminating listener. Frequency coverage: 600 kc/s–1.5 Mc/s and 1.7 Mc/s–32 Mc/s.

Kit **£39.16.0** Assembled **£53.0.0**

SINGLE SIDEBAND ADAPTOR. Model SB-10U. May be used with most A.M. transmitters. Less than 3W R.F. input power required for 10W output. Operation on 80, 40, 20, 15 and 10m bands on U.S.B., L.S.B. or D.S.B. Kit **£39.5.0** Assembled **£54.18.0**

Many other British 'Amateur' models. Send for Catalogue.

AMERICAN HEATHKIT "AMATEUR" EQUIPMENT

(As stocks in U.K. are limited, order as early as possible to avoid disappointment)

80–10M RECEIVER. Model SB-300E. This de luxe receiver offers unsurpassed value to the Radio Amateur. Of advanced design employing up-to-date construction techniques, its specification ensures unparalleled performance. Full details on request. Size 14⅞" x 6⅝" x 13⅜".

Kit **£133.14.0** (less speaker).


SB-300E

A fitting companion to this receiver is model **SB-400E TRANSMITTER:** Kit **£165.4.0**

SEND FOR AMERICAN CATALOGUE. 1/- Post Paid
Deferred Terms available in U.K. on all purchases over £10. Full details available.

SPEAKER SYSTEMS

COTSWOLD "MFS" SYSTEM. Specially developed to give best possible results in small rooms. This minimum floor space model is based on standard Cotswold. Size: 36" high x 16¼" wide x 14½" deep.

Kit **£23.4.0** Assembled **£30.15.0**


MFS

THE "COTSWOLD". This is an acoustically designed enclosure 26" x 23" x 15¼" housing a 12" bass speaker with 2" speech coil, elliptical middle speaker together with a pressure unit to cover the full frequency range of 32–20,000 c/s. Capable of doing justice to the finest programme source, its polar distribution makes it ideal for really Hi-Fi Stereo.

Kit **£23.4.0** Assembled **£30.15.0**


SSU-1

HI-FI SPEAKER SYSTEM. Model SSU-1. Ducted-port bass reflex cabinet "in the white". Two speakers. Vertical or horizontal models with legs, Kit **£11.12.0**, without legs, Kit **£10.17.6.**

HI-FI CABINETS


MALVERN

A wide range of equipment cabinets are available to meet the differing needs of enthusiasts. Designed for max. operating convenience or for where room space is an overriding consideration, this range includes kits, ready assembled cabinets or fully finished cabinets, and has at least one model to suit your requirements. Send for full details.

Prices from **£7.7.0** to **£37.16.0**

SEND FOR FREE BRITISH HEATHKIT CATALOGUE

American catalogue also available 1/- post paid

Without obligation please send me (Tick here)
FREE BRITISH HEATHKIT CATALOGUE ☐
FULL DETAILS OF MODEL(S) ☐
(Please write in BLOCK CAPITALS)
NAME
ADDRESS
DEPT. RC.11

DAYSTROM LTD DEPT. RC. 11
GLOUCESTER


The little instrument
with the
BIG
performance
1000V
1000V
250V
250V
100V
100V
D.C.
A.C.
25V
25V
10V
10V
2.5V
1A
·1A
X1
X100
OHMS
·1mA
1mA
10mA
D.C.

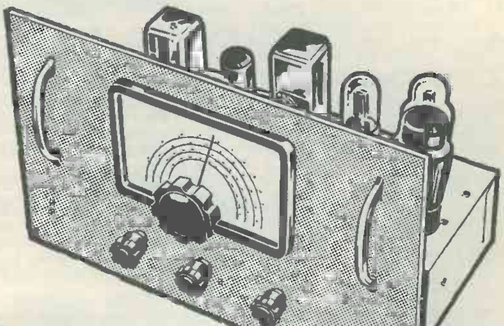

7 VALVE AM/FM RADIOGRAM CHASSIS

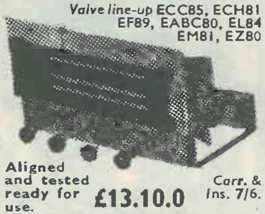

Valve line-up ECC85, ECH81 EF89, EABC80, EL84 EM81, EZ80

Three Waveband & Switched Gram positions. Med. 200–550m. Long 1,000–2,000m. VHF/FM 88–95 Mc/s. Phillips Continental Tuning insert with permeability tuning on FM & combined AM/FM IF transformers. 460 kc/s and 10.7 Mc/s. Dust core tuning all coils. Latest circuitry including AVC & Neg. Feedback. 3 watt output. Sensitivity and reproduction of a very high standard. Chassis size 13½"x 6½". Height 7½". Edge illuminated glass dial 11¼" x 3½". Vert. pointer Horiz. station names. Gold on brown background. A.C. 200/250V operation. Magic-eye tuning. Circuit diag. now available.

Aligned and tested ready for use. **£13.10.0** *Carr. & Ins. 7/6.*

Comp. with 4 knobs—walnut or ivory to choice. Indoor FM aerial 3/6 ex. 3Ω P.M. Speaker only required. Recommended Quality Speakers 10" Rola, 27/6. 13½" x 8" E.M.I. Fidelity, 37/6. 12" R.A. with conc. Tweeter, 42/6. Carr. 2/6.

ANOTHER TAPE RECORDER BARGAIN

Manufacturers' end of production Surplus Offer

A 24 gns. Tape Recorder offered at the bargain price of only 15 gns. plus 10/– carr. Supplied in 3 Units already wired and tested. A modern Circuit for quality recording from Mike Gram or Radio, using latest B.S.R. Twin Track Monardeck Type TD2. Valve line-up—EF86, ECL82, EM84, EZ80 and Silicon Diode. **Send for detailed list—3d. stamp.**

Completed Kit comprising items below

BARGAIN PRICE 15 Gns. + 10/– Carr.

2-tone Cabinet and 8" x 5" Speaker. Size 14" x 10½" x 7½"	£3 10 0 + 5/– Carr.
Wired Amplifier complete with 4 Valves, front Panel, Knobs, etc.	£5 12 6 + 3/6 Carr.
B.S.R. Monardeck Type TD2	£7 7 0 + 4/6 Carr.
Accessories: Mike, Tape, empty Reel, screened Lead and Plugs, Instructions, etc.... ...	£1 0 0 + 2/– Carr.

Jack Plugs. Standard 2½" Igranic Type, 2/6. Screened Ditto, 3/3. Miniature scr. 1½", 2/3. Sub-min. 1/3.

Jack Sockets. Open Igranic Moulded Type, 3/6. Closed Ditto, 4/–. Miniature Closed Type, 1/6. Sub-min. (deaf aid) ditto, 1/6. Stereo Jack Sockets, 3/6. Stereo Jack Plugs, 3/6.

Phono Plugs, 9d. Phono Sockets (open), 9d. Ditto (closed), 1/–. Twin Phono Sockets (open), 1/3.

Grundig Continental. 3 p. or 5 p. plug, 3/6. Sockets, 1/6.

Soldering Irons. Mains 200/220V or 230/250V. Solon 25 watt Inst., **22/6.** Spare Elements, **4/6.** Bits. **1/–** 65 watt, **27/6** etc.

Alumin. Chassis. 18g. Plain Undrilled, folded 4 sides, 2" deep, 6" x 4", 4/6, 8" x 6", 5/9, '0"x 7". 6/9, 12" x 6", 7/6, 12" x 8" 8/– etc,

Alumin. Sheet. 18g. 6" x 6", 1/–, 6" x 9", 1/6, 6" x 12", 2/–, 12" x 12". 4/6 etc.

RECORDING TAPE

Famous American Columbia (CBS) Premier quality tape at NEW REDUCED PRICES. A genuine recommended Quality Tape—TRY IT Brand new, boxed and fully guaranteed. Fitted with leader and stop foils.

Standard		Double Play		Long Play	
5" 600'	13/–	1,200'	31/6	900'	17/6
5¾" 900'	16/–	1,800'	37/6	1,200'	19/6
7" 1,200'	21/–	2,400'	47/6	1,800'	28/6

Post & Package per reel, 1/– plus 6d. each for additional reels.

SPECIAL OFFER. 3" Message tape 150', 3/9; 3" L.P. 225', 4/9; 3" D.P. 300', 6/6. P. & P. per reel 6d.

TAPE REELS. Mnfrs. surplus 7", 2/3; 5¾", 2/–; 5", 2/–; 3", 1/3; Plastic spool containers, 5", 1/9; 5¾". 2/–; 7", 2/3.

New Boxed **VALVES** **Reduced Bargain Prices**

1T4	3/6	ECC83	7/–	PCC84	8/–
1R5	6/–	ECL82	10/–	PCF80	8/–
1S5	6/–	ECL80	9/–	PCL83	10/6
3S4	7/–	EF80	7/6	PCL84	10/–
3V4	7/–	EF86	8/6	PL81	9/6
DAF96	8/–	EL84	7/–	PL82	9/–
DF96	8/–	EY51	9/–	PL83	8/–
DK96	8/–	EY86	9/–	PY32	10/6
DL96	8/–	EZ81	7/–	PY81	8/–
ECC81	7/–	GZ32	9/6	PY82	7/–
ECC82	7/–	EM84	8/6	U25	10/6

Electrolytics All Types New Stock

TUBULAR		CAN TYPES	
25/25V	1/9	8+8/450V	4/6
50/12V	1/9	16+16/450V	5/6
50/50V	2/–	32+32/275V	4/6
100/25V	2/–	50+50/350V	6/6
8/450V	2/3	60+250/275V	12/6
4/350V	2/3	100+300/275V	12/6
16+16/450V	5/6	2000+4000/6V	3/6
32+32/450V	6/6		
1000/25V	3/9		

Ersin Multicore Solder 60/40, 4d. per yard. Cartons **2/6**, etc.

DE LUXE R/PLAYER KIT

Incorporating 4 Speed Garrard Auto-Slim unit and Mullard latest 3 watt printed circuit amplifier (ECL 86 and EZ 80), volume, bass and treble controls, with 8" x 5" 10,000 line speaker. Superb quality reproduction.

Contemporary styled two-tone cabinet, charcoal grey and off-white with matching blue relief. Size: 17½" x 16" x 8".

COMPLETE KIT £13.19.6 Carr. & ins. 10/–.

Illuminated Perspex escutcheon, 7/6 extra.

Catalogue & construction details 2/6 (free with kit)

STANDARD RECORD PLAYER KIT

Using BSR UA14 Unit, complete kit £11.10.0, carr. 7/6. Ready wired Amplifier, 7" x 4" quality Speaker and O/P trans., £3.19.6, carr. 2/6. BSR UA14 Unit, £6.10.0, carr. & ins. 5/–. Rexine covered cabinet in two-tone maroon and cream, size 15¾" x 14¾" x 8½" with all accessories plus uncut record player mounting board 14" x 13", 59/6, carr. & ins. 5/–.

6 VALVE AM-FM TUNER UNIT

Med. and VHF 190m–550m, 93 Mc/s–106 Mc/s, 6 valves and metal rectifier. Self-contained power unit, A.C. 200/250V operation. Magic-eye indicator, 3 push-button controls, on/off, Med., VHF, low and high output with gain control. Perspex front panel 11½" x 4" with 7" illuminated dial. Overall size 11⅞" x 4" x 5¾" A recommended Fidelity Unit for use with Mullard "3-3" or "5-10" Amplifiers. Available only at present as built-up units, aligned and tested ready for use. **Bargain Price £12.10.0.** Carr. 5/–. **Available shortly in Kit Form at approximately 10 Gns.**

Volume Controls—5K–2 Megohms, 3" Spindles Morganite Midget Type. 1⅛" diam. Guar. 1 year. LOG or LIN ratios less Sw. 3/–. DP. Sw. 4/6. Twin Stereo less Sw. 6/6. D.P. Sw. 9/6 (100 k. to 2 Meg. only).
½ Meg. VOL Controls D.P. Sw. ½" flatted spindle. Famous Mfrs. 4 for 10/– post free.

COAX 80 OHM CABLE

High grade low loss Cellular air spaced Polythene —¼" diameter. Stranded cond. Famous mfrs. **Now only 6d. per yard.**

Bargain Prices—Special lengths:
20 yds. 9/–. P. & P. 1/6.
40 yds. 17/6. P. & P. 2/–.
60 yds. 25/–. P. & P. 3/–.
Coax Plugs 1/–. Sockets 1/–.
Couplers 1/3. Outlet Boxes 4/6.

Condensers—S/Mica all values 2pF to 1,000pF **6d.** Ditto Ceramic **9d.** each, .005, .01 and .1, etc., **1/–.** Paper Tubular 450V .001 mfd to .01 mfd and .1/350V **9d.** .02–.1 mfd **1/–**, .25 mfd **1/6**, .5 mfd **1/9.**

Close Tol. S/Micas—10% 5pF–500pF **8d.** 600–5,000pF **1/–.** 1% 2pF–100pF **9d.** 100pF–500pF **11d.** 575pF–5,000pF **1/6.** **Resistors—Full Range** 10 ohms–10 megohms 20% ¼ and ½W **3d.**, ditto 10% **4d.**, ¾W **5d.** (Midget type modern rating) 1W **6d.**, 2W **9d.** **Hi-Stab** 5% ¼–½W 100 ohms 1 megohm **6d.** Other values **9d.** 1% ½W **1/6.** **W/W Resistors** 25 ohms to 10K 5W **1/3**, 10W **1/6**, 15W **2/–.** **Pre-set T/V Pots. W/W** 25 ohms–50K **3/–.** 50K–2 Meg. (Carbon) **3/–.**

Speaker Fret—Expanded gilt anodised metal ¼" x ⅛" diamond mesh, 4/6 sq. ft., multiples of 6" cut. Max. size, 4ft. x 3ft. 47/6. Carr. extra.

TYGAN FRET (contemp. pat.) 12" x 12" 2/–, 12" x 18" 3/–, 12" x 24" 4/–, 18" x 18" 4/6, etc.

BONDACOUST Speaker Cab. Acoustic Wadding, superior grade, 1" thick, 12" wide, any length cut 1/6 per ft, 4/– per yd.

ENAMELLED COPPER WIRE—¼lb reels, 14g–20g, **2/6**; 22g–28g, **3/–**; 36g–38g, **4/3**; 39g–40g, **4/6**, etc.

TINNED COPPER WIRE—14–22g. 2/6 ¼ lb.

PVC CONNECTING WIRE—10 colours (for chassis wiring, etc.)—Single or stranded conductor, per yd., **2d.** Sleeving, 1mm. and 2mm., **2d.** yd., etc.

KNOBS—Modern Continental types: Brown or Ivory with Gold Ring, 1" dia., **9d.** each; 1⅜", **1/–** each; Brown or Ivory with Gold Centre, 1" dia., **10d.** each; 1⅜" **1/3** each. LARGE SELECTION AVAILABLE'

TRANSISTOR COMPONENTS

Midget I.F.'s—465 kc/s $\frac{7}{16}$" diam.	5/6
Osc. Coil—$\frac{7}{16}$" diam. M/W.	5/3
Osc. coil M. & L.W.	5/9
Midget Driver Trans. 3.5:1	6/9
Ditto O/Put Push-pull 3 ohms	6/9

Elect. Condensers—Midget Type 15V 1mfd–50mfd, ea. **1/9.** 100mfd. **2/–.**

Ferrite Aerial—M. & L. W. with car aerial coupling coil, **9/3.**

Condensers—150V. wkg. .01 mfd. to .04 mfd., **9d.** .05 mfd., .1 mfd., **1/–.** .25 mfd., **1/3.** .5 mfd., **1/6**, etc.

Tuning Condensers. J.B. "00" 208+176pF, **8/6.** Ditto with trimmers, **9/6.** 365pF single, **7/6.** Sub-min. ¾" DILEMIN 100pF, 300pF, 500pF, **7/–.**

Midget Vol. Control with edge control knob, 5kΩ with switch, **4/9**, ditto less switch, **3/9.**

Speakers P.M.—2" Plessey 75 ohms, **15/6.** 2½" Continental 8 ohms, **13/6.** 7" x 4" Plessey 35 ohm, **23/6.**

Ear Plug Phones—Min. Continental type, 3ft. lead, jack plug and socket. High Imp. **8/–.** Low Imp., **7/6.** High sensitivity M/coil **8–10** ohms, **12/6.**

JASON FM TUNER UNITS
Designer-approved kit of parts:
FMT1, 5 gns. 4 valves, **20/–.**
FMT2, £7. 5 valves, **35/–.**
JTV MERCURY 10 gns. 3 valves, **22/6.**
JTV2 £13.19.6. 4 valves, **28/6.**
NEW JASON FM HANDBOOK, 2/6. 48 hr. Alignment Service 7/6. P. & P. 2/6.

MULLARD "3—3" HI-FI AMPLIFIER
3 VALVES 3 WATT

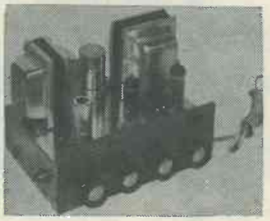

3 ohm and 15 ohm Output. Hi-Fi quality at reasonable cost. Bass Boost and Treble controls, quality sectional output transformer, 40 c/s–25 kc/s ± 1dB. 100mV for 3W, less than 1% distortion. Bronze escutcheon panel.

Complete Kit only £6.19.6. Carr. 5/–. **Wired and tested 8 gns.**

MULLARD "5-10" AMPLIFIER

5 valves 10W, 3 and 15 ohms output.

Mullard's famous circuit with heavy duty ultra-linear quality output transformer. **Basic amplifier kit price £9.19.6.** Carr. & Ins. 7/6.
Ready built £11.19.6.

CONTROL PANEL KIT

Bass, Treble and Volume controls with 4-position selector switch and 11" x 4" escutcheon panel, £2.5.0. Carr. 2/6.

Amplifier Kit and Control Panel Kit £11.19.6. Ditto ready wired £14.10.0.

2-VALVE PRE-AMP. UNIT

Based on Mullard's famous 2-valve (2 x EF86) circuit with full equalisation with volume, bass, treble, and 5-position selector switch. Size 9" x 4" x 2½". **Complete Kit £5.19.6.** Carr. 3/6.

Send for detailed bargain lists, 3d. stamp. We manufacture all types Radio Mains Transf. Chokes, Quality O/P Trans., etc. Enquiries invited for Specials, Prototypes for small production runs. Quotation by return.

RADIO COMPONENT SPECIALISTS

Est. 1946

70 Brigstock Rd., Thornton Heath, Surrey
THO 2188 *Hours; 9 a.m.–6 p.m., 1 p.m. Wed. Terms C.W.O. or C.O.D. Post and Packing up to ½ lb. 9d., 1 lb. 1/3, 3lb. 2/3, 5 lb. 2/9, 8 lb. 3/6.*

SINCLAIR X-10

A radical departure from conventional design

- Complete with pre-amp
- 11 Transistors
- No heat sink
- 10 watts output

ALREADY ACCLAIMED THE GREATEST ADVANCE IN YEARS

The Sinclair X-10 is a high fidelity integrated power amplifier and pre-amp using 11 transistors and having a transformerless output of 10 watts for feeding into a 15 ohm loudspeaker system. It requires only the addition of tone and volume controls plus a twelve volt d.c. power supply to make it a complete mono high fidelity assembly of exceptional quality. Stereo is achieved by using two X-10 amplifiers and ganged or separate controls. Input sensitivity is sufficient for all crystal or magnetic pick-ups and the manual supplied with the X-10 gives detailed instructions for connecting the controls and for using the amplifier in a wide variety of applications.

This radically new transistor amplifier (patients applied for) is the first to be marketed anywhere in the world using the pulse width modulation principle (P.W.M.). This technique permits an enormous reduction in the power dissipation in the output transistors of an amplifier; and in the case of the Sinclair X-10, the output efficiency is about 95% as compared with about 60% for conventional class B output stages. Thus the dissipation is only $\frac{1}{8}$th or less of that occurring in all other amplifiers. That is why no heat sink is required for the output stage, why small high frequency transistors can be used in place of the conventional low frequency power transistors and why the X-10 will operate from two 4/– batteries with normal use for about 3 months.

- ★ **Overall size** 6″ x 3″ x $\frac{3}{4}$″
- ★ **Input Sensitivity** 1mV into 1KΩ
- ★ **Total harmonic distortion** <0.1%
- ★ **Frequency response** 5–20,000 c/s ± 0.5dB
- ★ **Speaker impedance** 15Ω
- ★ **Damping factor** Greater than 100
- ★ **Quiescent consumption** 75mA
- ★ **Power requirements** 12 volts

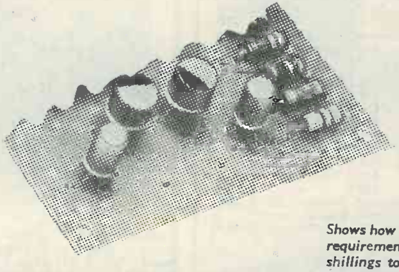

UNIQUE 4-TRANSISTOR OUTPUT STAGE

A special feature of the Sinclair X-10 is that the 4 transistors do not get hot even at full output because the circuit converts almost 100% of the power from battery or mains unit into audio power for the loudspeaker.

A GUARANTEED SINCLAIR DESIGN

If you are not completely satisfied with your purchase (and we are confident that you will be) your money will be refunded in full at once and without question.

Full Service Facilities always available to Sinclair Customers.

SINCLAIR X-10 MANUAL

Shows how to add correct tone and volume control systems to suit your requirements. None of these systems will add more than a few shillings to the cost of your X-10. The 12-page manual is included with every amplifier whether purchased complete or for assembling.

TO SINCLAIR RADIONICS LTD., COMBERTON, CAMBRIDGE. Comberton 682

Please send items detailed below £ s d

....

....

....

....

TOTAL £ ....

For which I enclose cash/cheque/money order

NAME....................

ADDRESS ....

....

....

RC.11

10 WATT INTEGRATED AMPLIFIER USING PULSE WIDTH MODULATION

FOR BUILDING YOURSELF OR COMPLETE

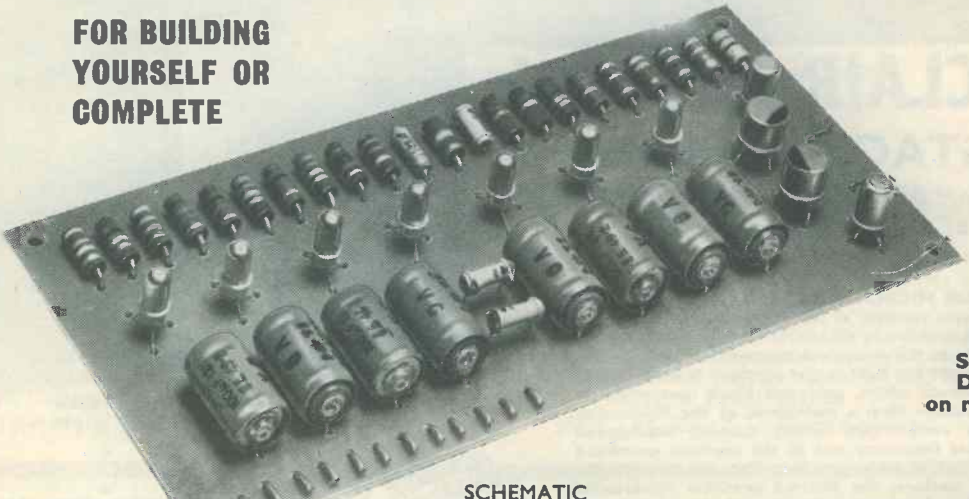

● More Sinclair Designs on next page ●

SCHEMATIC BLOCK DIAGRAM

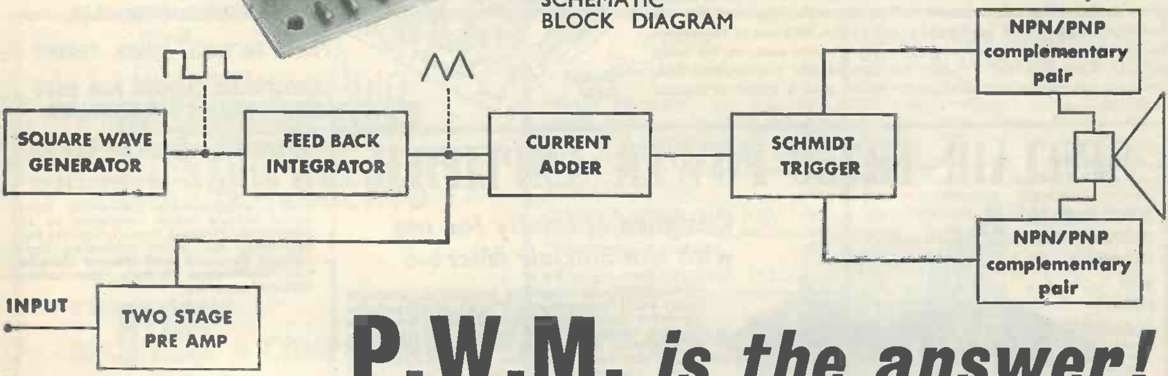

P.W.M. *is the answer!*

Cost of all parts for building together with Instruction Manual	**£5.19.6**
Ready Built and Tested together with Instruction Manual	**£6.19.6**
Mains power supply unit (A.C. 200–240 volt) to drive one or two X-10 amps.	**£2.14.0**

The principle of P.W.M. is briefly as follows: A square wave of constant voltage amplitude and with a frequency, in this case of 50 kc/s, is applied to the terminals of the load. As the load has a high impedance at this frequency negligible current flows through the voice coil of the speaker.

In the absence of any input signal, the mark space ratio of the square wave is unity—that is, the current flows for an equal period in each direction. When an input signal is applied, the mark-space ratio changes with the result that there is a net current flowing through the voice coil which deflects the cone. When the input signal is at any frequency up to 20 kc/s the net current is an exact replica of the input signal and is independent of the transfer characteristics of the output transistors. Thus the distortion figures can be incredibly low.

SINCLAIR RADIONICS LTD., COMBERTON, CAMBRIDGE *Telephone COMBERTON 682*

THE SMALLEST SET IN THE WORLD

SINCLAIR MICRO-6

SIX STAGE RECEIVER

Now over 9,000 built and in use in all parts of the world Have you built yours yet ?

THE SINCLAIR MICRO-6 continues unchallenged as the most remarkable receiver of its kind ever made available to the public anywhere in the world. It has special 6-stage circuitry, and is, at the same time, the smallest set on earth. Everything except the lightweight earpiece is contained in the smart, minute white, gold and black case which is appreciably smaller than a matchbox, as the illustration shows. With vernier-type tuning control, bandspread over the higher frequency end of the medium waveband and powerful A.G.C. to ensure fade free reception of the most distant stations, the Micro-6 provides remarkable standards of performance. Quality of reproduction is outstandingly good, and again and again, the set is reported to give excellent results where other sets cannot be used at all. The Micro-6 cannot be too highly recommended, both as an intriguing design to build, and a most practical radio to use.

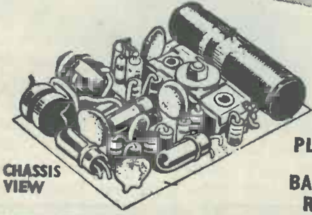

CHASSIS VIEW

ACTUAL SIZE

$1\frac{4}{5}'' \times 1\frac{3}{10}'' \times \frac{1}{2}''$

WEIGHS UNDER 1 oz

TUNES OVER M.W.

PLAYS IN CARS, BUSES, TRAINS

BANDSPREAD TUNING FOR EASY RECEPTION OF LUXEMBOURG

SINCLAIR TR750 POWER AMPLIFIER

With built-in volume control and switch

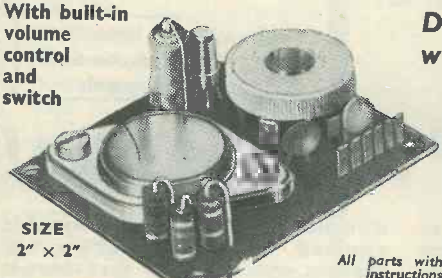

SIZE
2″ × 2″

Designed specially for use with the Sinclair Micro-6

THE TR750 (for building yourself or available ready built) measures only 2″ × 2″. It will provide powerful loudspeaker. reproduction from the Micro-6 which can then be used as a car radio or domestic or portable loudspeaker set. The TR750 also has many other applications such as record reproducer, intercom or baby alarm. The output of 750 milliwatts for feeding into a standard 25–30Ω loudspeaker requires only a 10mV input into 2kΩ. Frequency response 30–20,000 c/s ± 1dB. Power required—9 to 12 volts.

All parts with instructions come to **39/6**

Ready built and tested with instructions **45/-**

Easily built in a a single evening

Using components including some never before made available to the public, the Micro-6 is nevertheless easy to build. All parts including lightweight earpiece and clearly detailed and illustrated 8-page instructions manual come to

59/6

"TRANSRISTA" *black nylon strap for wearing the Micro-6 like a wrist-watch.* **7/6**

MALLORY MERCURY CELL ZM312 *(2 required) each* **1/11**

Handy pack of 6 cells **10/6**

** ORDER FORM AND X-10 ON PRECEDING PAGES*

UNIQUE SINCLAIR

Guarrantee

The following unconditional guarantee applies to everything you buy from Sinclair Radionics Ltd. If you are not completely satisfied with your purchase (we are confident you will be delighted) your full purchase price will be refunded instantly and without question.

FULL SERVICE FACILITIES ALWAYS AVAILABLE TO SINCLAIR CUSTOMERS

sinclair

SINCLAIR RADIONICS LTD
COMBERTON, CAMBRIDGE
Telephone COMBERTON 682

LATEST HIGH QUALITY COMPONENTS FROM THE MAXI-Q RANGE . . .

TESTED AND TRIED OVER 5 FREQUENCY RANGES

TRANSISTOR TUNING COILS

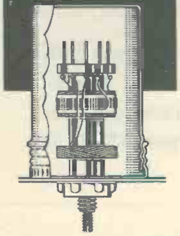

Coils for transistor superhets or converters, with or without an R.F. stage and using 465 kc/s or 1.6 Mc/s I.F.

- ★ Noval B9A Based for Plug-in application—Screw threaded for Chassis application.
- ★ Formers moulded in low-loss polystyrene for best results.
- ★ Each coil is packed in an aluminium container which may be used as a screening can.
- ★ Brass threaded adjustable iron-dust cores.

The following colour code identifies the coils:

BLUE—Aerial coil with base input winding.
RED—Oscillator coil for 465 kc/s I.F.
YELLOW—Interstage R.F. coil with couplings.
WHITE—Oscillator coil for 1.6 Mc/s I.F.

PRICE 4/9 each.

Coverages: Range 1T–.15/.4 Mc/s; 2T–.515/1.545 Mc/s; 3T–1.67/5.3 Mc/s; 4T–5/15 Mc/s; 5T–10.5/31.5 Mc/s.

Full technical details now included in Technical Bulletin DTB.4—**1/6d.**

IFT.13 Miniature 465 kc/s I.F. Transformer .. **7/6d.** each
IFT.14 Miniature 465 kc/s Last I.F. Transformer **7/6d.** each
IFT.16 Miniature 1.6 Mc/s I.F. Transformer .. **6/6d.** each
IFT.17 Miniature 1.6 Mc/s Last I.F. Transformer **6/6d.** each

GENERAL CATALOGUE covering full range of components send 1/6d. in stamps. PLEASE SEND S.A.E. WITH ALL OTHER ENQUIRIES.

DENCO (CLACTON) LTD · (DEPT. R.C.) · 357/9 Old Road · Clacton-on-Sea · Essex

---

AMATEUR RADIO
CHAS. H. YOUNG LTD.

MIDLAND AGENTS FOR

- ★ **EDDYSTONE RECEIVERS & COMPONENTS**
- ★ **NATIONAL RECEIVERS & TRANSCEIVERS**
- ★ **GREEN & DAVIS CONVERTERS**
- ★ **KW EQUIPMENT**
- ★ **MOSLEY AERIALS**
- ★ **WITHERS**
- ● **H.P. FACILITIES AVAILABLE**
- ● **PART EXCHANGES**

AERIAL EQUIPMENT

TWIN FEEDER. 300 ohm twin ribbon feeder similar **K25, 6d.** per yard. K35B Telecon (round), **1/6** per yard. 75 ohm twin feeder, **6d.** per yard. Post on above feeders and cable, **1/6** any length.

COPPER WIRE, 14G, H/D, 140ft, **17/–**; 70ft, **8/6**. Post and packing 2/6. Other lengths pro rata.

FEEDER SPREADERS. 6" Ceramic type F.S., **10d.** each. Postage 1/6 up to 12.

CERAMIC CENTRE PIECE for dipoles, Type AT, **1/6** each. P. & P. 1/–.

2 METRE BEAM, 5 ELEMENT W.S. YAGI. Complete in box with 1" to 2½" masthead bracket. Price **49/–**. P. & P. 3/6.

SUPER AERAXIAL, 70/80 ohm coax, 300 watt very low loss, **1/8** per yard. P. & P. 2/–.

TOUGH POLYTHENE LINE, type MLI (100lb), **2d.** per yd. or **12/6** per 100 yds. Type ML2 (220lb), **4d.** per yd. or **25/–** per 100 yds., ML4 (400lb), **6d.** per yd., post free. Ideal for Guys, L.W. Supports, Halyards, etc.

ABSORPTION WAVEMETERS. 3.00 to 35.00 Mc/s in 3 Switched Bands. 3.5, 7, 14, 21 and 28 Mc/s. Ham Bands marked on scale. Complete with indicator bulb. A MUST for any Ham Shack. ONLY **22/6** EACH. Post free.

BANDCHECKER MONITOR, 3.00–35.00 Mc/s in 3 switched Bands. 0–1mA Indicator. Monitor Socket. Very sensitive, **£3.13.6.** P. & P. 2/6.

VARIABLE CONDENSERS. All brass with ceramic end plates and ball race bearings. 50pF, **5/9**; 100, **6/6**; 160, **7/6**; 240, **8/6**; and 300pF, **9/6.** Extension for ganging. P. & P. 1/–.

RACK MOUNTING PANELS: 19" x 5¼", 7", 8¾", or 10½", black crackle finish, **5/9, 6/6, 7/6, 9/–** respectively. P. & P. 2/–.

GELOSO VFO UNITS. 4/102 with new dial and escutcheon. Outputs on 80, 40. 20, 15 and 10. For 2–807 or 6146 Tubes. Only **£8.15.3,** valves to suit, **24/–**. ALL POST FREE.

SHADED POLE MOTORS, 230V or 110V operation, ideal for fans, blowers or models. Single Unit **12/6,** plus 2/– P. & P., or Pair **£1,** plus 2/6 P. & P.

PARMEKO TRANS. 200/200 40mA, 6.3V, 3A. New, not ex-W.D. Only **12/6.** P. & P. 2/6.

CHAS. H. YOUNG LTD
170-172 Corporation St., Birmingham 4
Please print your address. No C.O.D. under £1. **'phone CEN 1635**

HOME RADIO of MITCHAM

DEPT. RC, 187 London Road, Mitcham, Surrey. MIT 3282 *Shop hours: 9–5.30; Fri. 9–6.30. Closed all Wed.*

WE HAVE IN STOCK all the ARMSTRONG range of TUNERS and TUNER AMPLIFIERS. Here are three of them . . .

Model 227

The **227** Stereo Tuner Amplifier provides 20 watts push pull output, covers the full F.M. and Medium bands, and accommodates any high quality ceramic or crystal pick-up. The Decca Deram is recommended. Price **£52.15.0.**

Model 227M

The **227M** is identical to the 227 except that it is mono only. Price **£36.15.0.**

Model 226

The **226** is basically the same as the 227 but with additional features. These include a high gain pick-up input for magnetic pick-ups, switched treble filter, tape monitoring facilities and switched volume compensation. Price **£61.0.0.**

HOME RADIO CATALOGUE

New Edition! New Policy!

With the arrival of the 10th Edition of the famous Home Radio Catalogue we announce a fresh policy. The new price of 5/– will just cover the cost of the paper and printing, but on the first page of the catalogue you will find 5 coupons, each worth 1/– if used as directed. Briefly the system will operate thus: for each complete £1 of your order you enclose one of the coupons and deduct 1/– from the money you send. **There is no time limit** so if you purchase £5 worth of components from us—*even though spread over several years*—your catalogue will have cost you nothing!

We need only add that our new Catalogue is bigger and better than ever . . . so fill in the Coupon, enclose 6/– (5/– plus 1/– postage), and pop it in a letter box right away!

Please write your Name and Address in block capitals

Name ______________________

Address ______________________

____

____

Home Radio Ltd. Dept. R.C., 187 London Road, Mitcham

THE
Radio Constructor

Incorporating THE RADIO AMATEUR

NOVEMBER 1964

Vol. 18, No. 4
Published Monthly
(1st of month)

Editorial and
Advertising Offices
57 MAIDA VALE LONDON W9

Telephone
CUNningham 6141

Telegrams
Databux, London

First Published
1947

Annual Subscription 33s. (U.S.A. and Canada $5) including postage. Remittances should be made payable to "Data Publications Ltd". Overseas readers please pay by cheque or International Money Order.

Published in Great Britain by the Proprietors and Publishers Data Publications Ltd. 57 Maida Vale London W9
Printed by A. Quick & Co. (Printers) Ltd. Oxford Road Clacton-on-Sea England

Transistorised Capacitor Tester

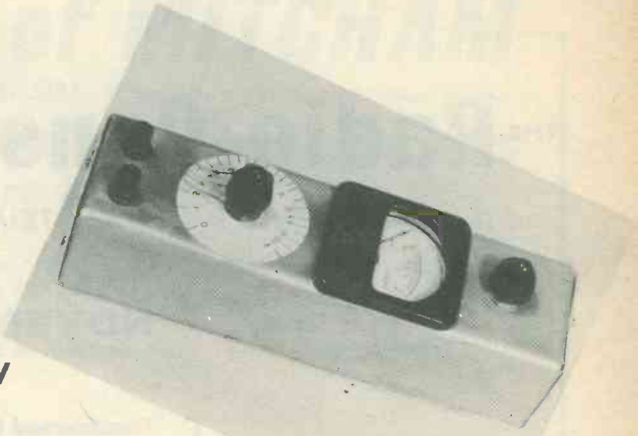

By JOHN G. DEW

Capacitance measuring equipment is always of use in the amateur workshop, and this article describes a particularly ingenious instrument which may be constructed at extremely low cost. Also discussed are variations to the basic circuit which enable electrolytic capacitors and inductors to be measured, or which convert it to an a.f. or square wave generator

THE COLOUR CODING OF A RESISTOR ELIMINATES the necessity of measuring its resistance before using it, but nevertheless almost every multi-range test meter has two or three ranges for just that purpose. How much more necessary, then, is a means of checking the value of a capacitor, which often carries no clue as to its identity.

It is possible to design a direct-reading instrument to measure the value of a capacitor, but the accuracy of such a tester would depend upon almost every component used, including the meter movement.

The instrument described in this article employs a bridge circuit to compare the unknown capacitor with a standard one, the latter being the only close tolerance component which is required. A meter is used to detect the balance point of the bridge and, as only a null indication is required, the meter movement need not be large or accurate.

Circuit

Referring to the circuit of Fig. 1, TR_1 and TR_2 act as a multivibrator oscillating at about 1 kc/s. The output from this circuit is passed via an emitter follower stage TR_3 (to reduce oscillator loading) to a bridge circuit consisting of VR_1, C_x and either C_3, C_4 or C_5. If this bridge is unbalanced a signal appears between the slider of VR_1 and the junction

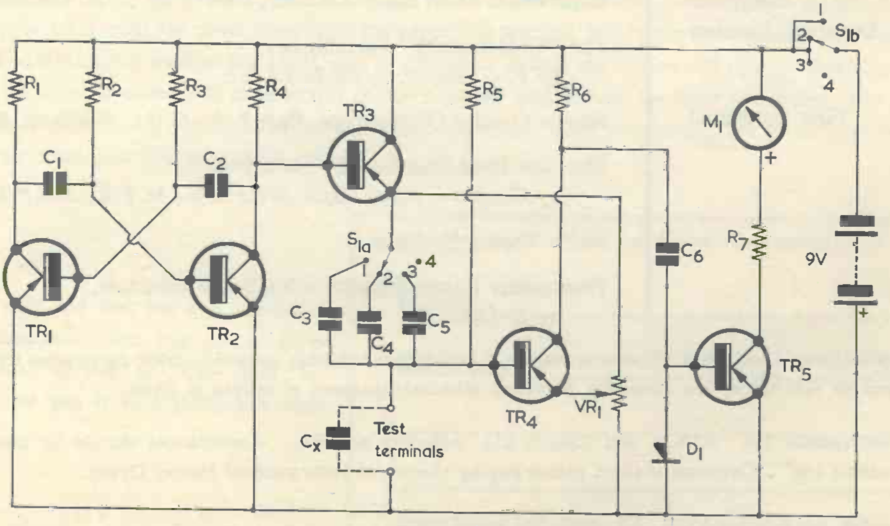

Fig. 1. The circuit of the transistorised capacitance tester. C_3, C_4 and C_5 are the standard capacitors

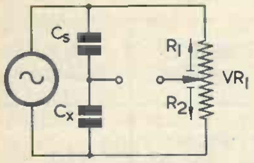

Fig. 2. The basic bridge circuit

of C_x and the standard capacitor, and this signal is applied to the base-emitter junction of TR_4. The amplified signal which appears at the collector of TR_4 is passed to TR_5, where it is fed to the base-emitter junction and D_1. The resulting collector current in TR_5 produces a deflection of the meter M_1.

Components

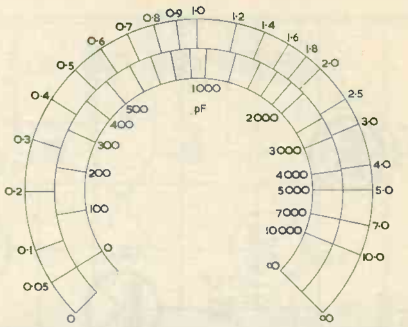

Fig. 3. An example of a constructed scale, with allowance for stray capacitance on the 1,000pF range

The use of five transistors may appear rather lavish, but four of these need only be of the surplus "red spot" variety which are available very cheaply now. (Better types can also be used, of course.) TR_4 is the only transistor which needs a high gain; an OC76 was used by the author, but a MAT121 would also be suitable.[1] The higher the current gain of TR_4, the larger can be the value of R_5, with a resultant increase in the accuracy on the smallest capacitance range.

Components List (Fig. 1)

Resistors

(All fixed resistors $\frac{1}{4}$ watt)

R_1	4.7kΩ
R_2	470kΩ
R_3	470kΩ
R_4	4.7kΩ
R_5	3.3MΩ (see text)
R_6	4.7kΩ
R_7	330Ω
VR_1	2kΩ wirewound linear

Capacitors

C_1	0.005µF 150V wkg.	
C_2	0.005µF 150V wkg.	
C_3	0.001µF	tolerances as required
C_4	0.01µF	
C_5	0.1µF	
C_6	0.1µF 150V wkg.	

Transistors

TR_1 TR_2 TR_3 TR_5	OC71, "red spot"
TR_4	OC76, MAT 121

Diode

D_1	OA70, OA81

Miscellaneous

M_1	5 or 10mA f.s.d. (see text)
S_1	4-way, 2-bank

Paxolin panel, Metal case
Two insulated terminals
One pointer knob
One range switch knob
9 volt battery.

The type of meter used is not critical, and it can have a sensitivity of 5 or 10mA f.s.d. if TR_4 and TR_5 have good gains; if these gains are low, 1mA f.s.d. might be necessary. As no special scale marking is required, a cheap meter with an unusual scale can be employed. (The one used by the author was scaled "Up" and "Down"!)

The standard capacitors can be as accurate as the constructor requires; the 1,000pF component can be ±1 or ±2%, and the two larger values would probably be ±5%, closer tolerances being more expensive.[2]

Construction

The author's circuit is built on a printed circuit board, which was prepared in the usual way. Alternatively, a plain Paxolin board can be used, using component wires for interconnection.

The board carries two clips which hold the 9 volt battery in position as well as making contact with the terminals. The board is mounted on the ter-

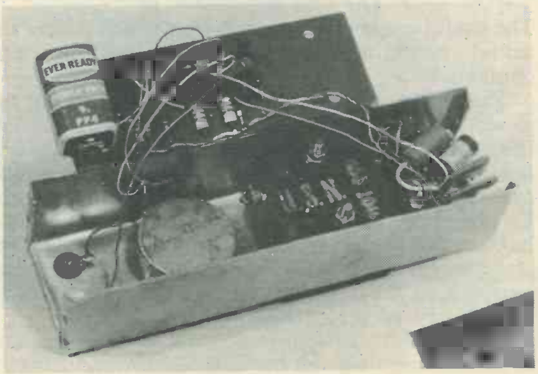

The back cover removed, showing component layout

---

[1] A MAT121 should not be used if meter current is liable to exceed about 7.5mA (see the following paragraph in the article), since its maximum power rating of 50mW would then be exceeded.—EDITOR.

[2] Silver-mica capacitors with values of 1,000 and 10,000pF, and a tolerance of ±1%, are available from Home Radio (Mitcham) Ltd.—EDITOR.

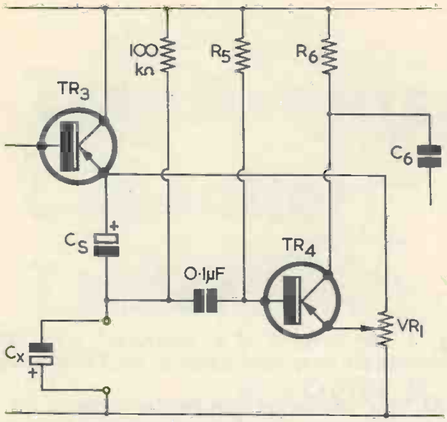

Fig. 4. A modification which allows the measurement of electrolytic capacitors

minals of the meter which is, in turn, bolted to an aluminium case. The 4-way 2-bank switch S_1 and potentiometer VR_1 are both mounted on the case front, free of the circuit board. S_1 is the range switch, and carries the standard capacitors; it also functions as an on-off switch. VR_1 is the balance control, and carries a pointer knob above the capacitance scale.

Calibration

The scale may be calibrated by using a standard decade capacitance box; however, these are rather expensive and unlikely to be possessed by an amateur.

An alternative method is to make use of the balance condition of the bridge, which is $R_1C_s = R_2C_s$ (see Fig. 2) where C_s is the standard capacitance. The accompanying table is derived from this equation and enables a scale to be constructed using only a protractor and compasses. The useful angle of rotation of the potentiometer is assumed to be 270°, which is the usual value. If another value is encountered, all the angles in the table must be multiplied by $\frac{x}{270}$, where x is the angle of rotation. The useful angle of rotation is that which covers the actual potentiometer track, not including end contacts.

This bridge equation will hold true for all but the lowest range, on which the stray capacitance across the terminals will have some effect. The method of dealing with this is to temporarily connect a 100pF capacitor in place of the 1,000pF component in the C_3 position, switch the instrument on and obtain a balance (as described below). This will indicate the stray capacitance as a multiple of 100pF. For example, a balance point at 0.5 indicates a stray capacitance of $0.5 \times 100\text{pF} = 50\text{pF}$.

The 1,000pF capacitor can now be replaced, and a second scale can be constructed for the 1,000pF range by altering the positions of all the markings by 50pF (or whatever value of stray capacitance is found). An example of a scale with a modified 1,000pF range is shown in Fig. 3.

Calibration of VR1

Angle of rotation	*Scale marking*	*Angle of rotation*	*Scale marking*
degrees		degrees	
0	0	147	1.2
13	0.05	158	1.4
25	0.1	166	1.6
45	0.2	174	1.8
62	0.3	180	2.0
78	0.4	193	2.5
90	0.5	203	3.0
101	0.6	216	4.0
111	0.7	225	5.0
120	0.8	236	7.0
128	0.9	246	10.0
135	1.0	257	20.0
		270	∞

Use

The instrument is simple to use. The unknown capacitor is connected to the test terminals, the appropriate range is selected, and the potentiometer is rotated until the meter shows a minimum deflection. The capacitor value is then that multiple of the standard capacitance which is indicated by the scale reading. For example, a reading of 2 on the 1000pF range implies an unknown capacitance of 2000pF (0.002μF).

Modifications

A number of alterations can be made to the basic circuit of Fig. 1 to enable other functions to be carried out. These will now be shown in the form of modifications to the appropriate part of the original circuit, the values of additional components being indicated in the diagrams.

Electrolytic Capacitors

The circuit given in Fig. 1 can only be used for

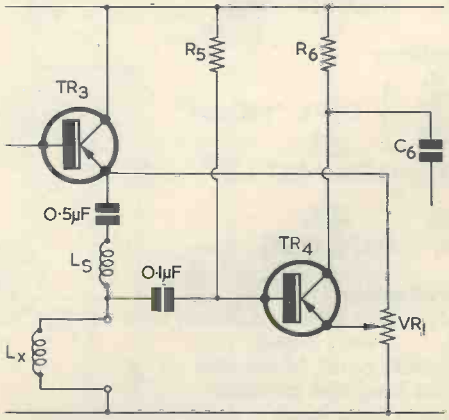

Fig. 5. How the bridge may be used to measure inductance

checking non-electrolytic capacitors. The simple modification shown in Fig. 4 enables electrolytic capacitors to be tested. The maximum value of the standard in this case is limited to about 1μF, because of the loading of the oscillator. If the frequency of oscillation is reduced to, say, 100 c/s by increasing C_1 and C_2 by ten times, then a standard of 10μF could be used, permitting capacitance measurements up to 100μF. However, this would sacrifice the performance at the other end of the scale, limiting the minimum measurable capacitance to about 500pF.

Inductors

The author has successfully modified his instrument to measure inductance, as shown in Fig. 5. The oscillator frequency needs to be raised to 10 to 20 kc/s, necessitating fairly good transistors throughout. Otherwise, the only difficulty is that of obtaining "standard" inductors. The author had access to a $\frac{1}{4}$% bridge, and so was able to construct coils of 1mH and 10mH with reasonable accuracy. An alternative would consist of starting with an i.f. transformer with the capacitor removed. The inductance can be calculated, if the tuning capacitance and intermediate frequency are known, from $L = \frac{1}{4\pi^2 f^2 C}$ where L is in henries, C is in farads, and f is in c/s.

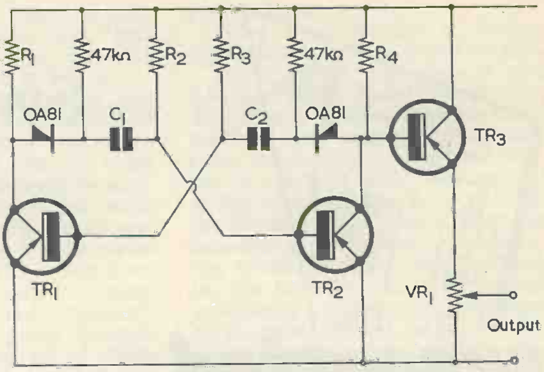

Fig. 6. Modifying the multivibrator to give a square wave

Audio Signal Generator

Finally, the first three transistors form an excellent audio signal generator, a maximum output of about 8 volts peak-to-peak being available between the slider and earthy end of VR_1. TR_3 is a buffer stage and allows a low impedance load to be connected without preventing the oscillator from working.

If desired, the waveform can be made quite square by using the modified multivibrator circuit shown in Fig. 6. The diodes decouple the base and collector circuits and allow faster rise times.

CAN ANYONE HELP?

Requests for information are inserted in this feature free of charge, subject to space being available. Users of this service undertake to acknowledge all letters, etc., received and to reimburse all reasonable expenses incurred by correspondents. Circuits, manuals, service sheets, etc., lent by readers must be returned in good condition within a reasonable period of time.

HMV Radiogram No. 1620.—G. M. Edwards, R.T.S.C. House, 11 Pamela Gardens, Eastcote, Pinner, Middx, wishes to purchase or borrow the manual or circuit for this unit.

* * *

NRMS 3A.T. Radio.—W. Milne, 18 Dudley Road, Clive Vale, Hastings, Sussex, requires the circuit diagram or valve line-up. Also required are any notes on the operation of a Radiolab valve gauge.

* * *

Type 3 Mk. II Transreceiver.—L. O. Tully, 120 Victoria Street, Fairfield S3, Brisbane, Queensland, Australia, requires the manual or circuit of this transmitter/receiver and power supply.

Pye QAC2 Receiver.—R. Crawley, 12 West Park, London, S.E.9., wishes to borrow or buy the circuit and/or manual and any other information on this receiver.

* * *

BSR L.O.50A Oscillator.—H. T. Lunson, 17 Tongdean Rise, Brighton, Sussex, requires instruction manual and circuit diagram of this unit.

* * *

Signal Generator Type CT53.—K. W. Harrington, "Tweedknowe", Tweedmount Road, Melrose, Roxburghshire, would like to obtain the manual or circuit diagram, or any other information on this generator (8.9 to 300 Mc/s).

continued on page 234

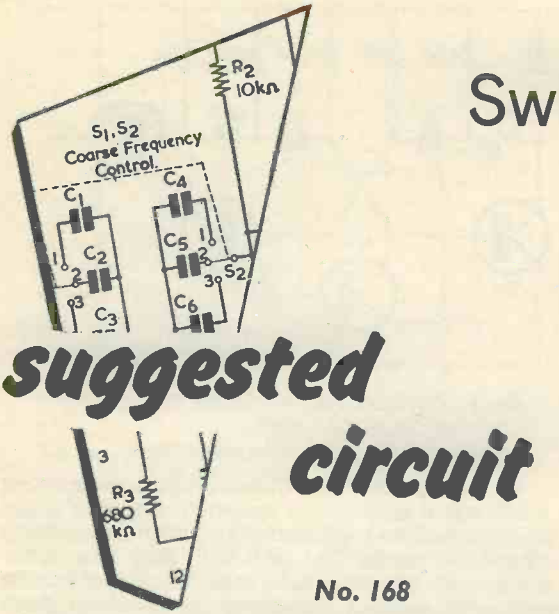

No. 168

Switch-off Indicator for TRANSISTOR RADIOS

By G. A. FRENCH

One of the minor drawbacks with transistor radio receivers is that their quiet, or even inaudible, sound output at low settings of the volume control tends to make their presence forgotten. Because of this, such radios are frequently left switched on for considerable periods of time, with the result that batteries run down rapidly and running costs become increased. The situation is worsened if the on-off switch for the radio is combined with the volume control. The volume control may then be carelessly set so that the receiver offers zero sound output without being turned sufficiently far to operate the on-off switch itself. It should be added that the tumbler action in some miniature combined potentiometer-switches is of rather a weak nature and does not provide a "snap-over" action which is audible or can be felt by the fingers.

This difficulty appears to be wide-spread with transistor receivers, and it cannot be easily overcome as is the case with mains-driven radios. With the latter the extinction of a dial lamp or lamps gives obvious evidence of switching off, but it is undesirable to employ continually illuminated dial lamps in transistor receivers because of the excessively high current that would be drawn from the battery.

A previous contributor* has tackled this problem in an ingenious manner by employing a single-transistor low frequency oscillator, the oscillator transformer having a step-up winding which feeds a neon lamp. The neon lamp remains illuminated all the time the receiver is switched on, and the current drawn by the oscillator from the receiver battery is of the order of 1 to 2mA only.

This Month's Circuit

The circuit described in this month's article employs a different approach, the lamp used being a standard filament type. It becomes illuminated for a short while immediately after switching off, thus indicating that the on-off switch has been properly actuated. There is, therefore, a positive indication of switching off, instead of the negative indication given by lack of sound output (which may, in any case, occur before actual switching takes place) that is otherwise offered. After having become used to the operation of the device, the less technical members of the family will, in particular, be much more liable to be impressed by the fact that the volume control has to be turned back sufficiently far for the lamp to flash than that it should be turned back until it "clicks".

If desired, the indicating lamp may be made to illuminate a tuning scale, it being brought into use for this function (when the receiver is switched on) by pressing a button. This facility would be attractive with receivers employing batteries of the PP9 class or larger.

The components required for the indicating circuit comprise the bulb itself, a transistor, a resistor and a electrolytic capacitor. The capacitor requires a relatively large value, and this fact represents a minor disadvantage of the circuit. If the push-button facility is required, a second resistor and the push-button itself are needed.

The device can be readily incorporated into most 9 or 12 volt superhet transistor receivers which have sufficient space for the extra components. Since the only bulky component is the electrolytic capacitor, most receivers, apart from miniaturised types, will be able to accommodate the additional parts. It is necessary to check that the receiver is capable of working with the circuit before fitting the components, and this point is discussed later.

The average current drawn from the receiver battery by the indicator circuit is negligibly small.

Circuit Operation

A simple introduction to the indicator circuit principle is given in Fig. 1. In this diagram it is assumed that the receiver on-off switch is a s.p.d.t. type inserted in the positive supply line.

When this switch is set to the "on" position, the 9 volt supply is fed to the receiver stages and the latter function in normal manner. At the same time, the supply is

---

* R. M. Marston, "2mA Indicating Lamp for Transistor Radios", *The Radio Constructor*, March 1964.

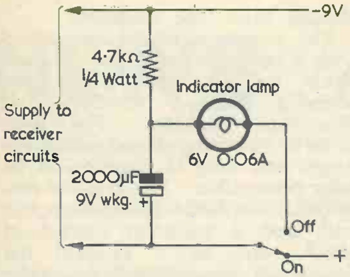

Fig. 1. A simple circuit which allows an indicator lamp to flash when switching off a transistor receiver

applied to the 2,000μF electrolytic capacitor in series with the 4.7kΩ resistor. The battery commences to charge the capacitor and, after some 40 seconds, almost the full supply potential appears across its plates. The circuit remains in this condition until the switch is set to "off". The switch then connects the indicator lamp across the electrolytic capacitor, which at once discharges through its filament. The lamp glows for a short while, indicating that the receiver has been switched off.

The circuit of Fig. 1 is quite practicable and useful, but it only applies to the instance where a changeover switch can be employed for receiver switching. The switches incorporated in potentiometer-switch combinations have single-throw actions only, these causing a circuit to be completed only when they are set to the "on" position. Nevertheless, the circuit shown in Fig. 1 enables the basic principle of the indicator lamp circuit to be introduced.

Fig. 2 shows a more comprehensive circuit, as may be fitted to a standard 9 volt transistor superhet. The only addition, in the indicator circuit proper, is the OC72 transistor, TR_1.

When S_1 of Fig. 2 is closed, the 9 volt supply is applied to the receiver circuits, and to C_1 and R_1 in series. C_1 commences to charge, the voltage across its plates becoming close to the supply potential after some 40 seconds. Due to leakage current in C_1, there will always be a small voltage across R_1, whereupon the base of TR_1 is always slightly positive of its emitter. Thus TR_1 is cut off and passes no current.

The receiver stages draw a standing current from the battery, this consisting of the current drawn by fixed potential dividers across the supply rails plus the current drawn by the receiver transistors themselves. It will be helpful, now, to look upon the receiver stages as a "load resistor", such a resistor appearing across points A and B of Fig. 2.

When S_1 is opened, the 9 volt supply is switched off. Point B then tends to assume the same potential as point A, the two being linked together by the "load resistor" just referred to. At the same time, C_1 still holds its charge and its plates have nearly 9 volts across them. The base of TR_1 is, therefore, coupled to the negative terminal of C_1 via the "load resistor", whereupon the transistor becomes conductive. In doing so, it allows C_1 to discharge into the indicator lamp, causing the latter to flash.

Thus, the same effect takes place as occurred in Fig. 1, the addition of TR_1 making up for the absence of changeover contacts in the receiver on-off switch.

After the indicator lamp has flashed, the circuit reverts to the same condition as occurred before the on-off switch was closed.

Fig. 2 shows a double-pole switch in the S_1 position, but it should be noted that the circuit will work in exactly the same manner if a single-pole switch is used, and that this can be inserted in either the negative or the positive supply lead.

The push-button S_2 may be employed to light up the bulb if this facility is required for tuning scale illumination. In this case R_2 is inserted in series to limit the potential across the bulb to approximately 6 volts. S_2 and R_2 do not affect the operation of the remainder of the circuit. If the device is to be incorporated in a 12 volt receiver, a further 47Ω ½ watt resistor should be inserted between the indicator lamp and the negative supply rail. Also, C_1 will require a minimum working voltage of 12.

Further Points

There are a number of further points which require amplification.

The indicator lamp is a 6 volt 0.06 amp m.e.s. Radio Spares bulb. This type is specified because of its relatively low current requirement. Since the electrolytic capacitor charges to nearly 9 volts, a current in excess of 0.06 amps flows through the filament at the instant when the capacitor is coupled to it. However, the visual effect is that the flash has the same brightness as is given by normal working at 6 volts, and it is possible that most of the excess current flows before the filament reaches its maximum temperature.

The duration of the flash can be extended by using a larger capacitance in C_1. If this is made considerably greater than 2,000μF it may be desirable to insert a small resistor in series with the bulb to limit initial current.

In order that TR_1 may pass sufficient current for the bulb to be illuminated, its base current needs to be high. As has just been mentioned, this base current is controlled by the "load resistor" offered by the receiver stages. In practice there is a complicating factor here since it is customary to fit a bypass capacitor of about 100μF across the supply rails of conventional receivers, and such a capacitor delays the application of full base current to TR_1. If this delay is too long, TR_1 may not become fully conductive immediately after switching off, with the result that C_1 discharges through it whilst in a partly conductive condition and the lamp does not become illuminated.

Initial experiments with the circuit (and without the receiver stages connected) showed that the device functioned satisfactorily if a 4.7kΩ resistor was connected across points

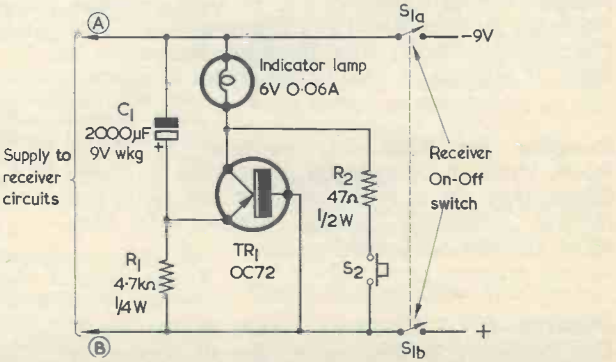

Fig. 2. A more comprehensive circuit, which forms the basis of this month's article. Components R_2 and S_2 are optional, and may be deleted if so desired

A and B, but that the lamp failed to illuminate if this resistor was shunted by a 100μF capacitor. By reducing the value of the resistor to 1.2kΩ, the device once more operated satisfactorily with the 100μF capacitor in circuit. This set of circumstances corresponds approximately to the case where a receiver incorporating a 100μF bypass capacitor draws a quiescent (i.e. minimum volume) current of 7.5mA. Most transistor superhets draw a quiescent current higher than 7.5mA, and so the requirement of quick application of base current to TR_1 after switching off is satisfactorily met. Nevertheless, the device should be checked with the particular receiver in which it is to be installed before wiring it permanently into circuit. All that is required is to temporarily wire up components C_1, R_1, TR_1 and the lamp, remove the battery from the receiver and apply points A and B to the receiver battery terminals. The receiver is then switched on and left at minimum volume. If the battery is next applied to the circuit and left connected for some 40 seconds, the lamp should flash when the battery is removed. Apart from fault conditions, failure of the bulb to flash will be due to too high a bypass capacitance in the receiver and/or to too low a quiescent current. It should, however, be found that most transistor superhets are satisfactory in this respect.

Capacitor C_1 takes about 40 seconds to charge up to nearly the full supply potential, and it may be felt by some experimenters that this is rather too long a period. The charging period may be reduced by decreasing the value of R_1, but there will of course be a higher initial charging current required of the battery. If R_1 is made very low in value it may cause a reduction in the base current flowing in TR_1, immediately after switching off, and this could have a detrimental effect on circuit operation.

Results With The Prototype

The prototype circuit was tested with a conventional 9 volt, 6 transistor medium and long wave superhet receiver, whereupon it functioned perfectly. The flash given on switching off was sufficiently bright and long in duration to be fully perceptible. The receiver employed had a 100μF bypass capacitor and drew a quiescent current of 10mA; and so it satisfied the figures just discussed quite adequately. The circuit was wired in immediately after the receiver on-off switch, as shown in Fig. 2, and it shared the same section of the supply rails as did the output transistors.

The receiver stages were then disconnected and the current drawn by the indicator circuit on its own measured. Immediately after switching on there was an initial current drain of slightly less than 2mA, this reducing as C_1 charged. The current dropped to a negligible value after a minute.

CAN ANYONE HELP? *(Continued from page 231)*

Power Unit Positive Type 889, etc.—R. G. Barrell, 14 Gisborne Crescent, Allestree, Derby, would appreciate circuit diagrams for the above unit (ref. No. 10K/16148) and also for Aircraft Receiver Type R57/ARN5. Also required are any details of the original application of Frequency Converter Type CV 253/ALR, particularly the nominal intermediate frequency.

* * *

Frequency Sub-Standard Ref. 10S/76.—E. S. Symonds, 5 John Street, City Road, Cambridge, requires manual or circuit diagram.

* * *

Philips TV Type 1238U/15.—A. N. Venkataraman, Acoustics & Infra-Red Lab., Electronics & Radar Development Estab., High Grounds, Bangalore, 1, India, is urgently in need of the circuit diagram.

* * *

Reception Set R220.—D. Westlake, 29 Brook Road, Urmston, Manchester, would like to obtain information on a tuner unit for use with this receiver. Frequency coverage required—87.5 Mc/s up to amateur v.h.f. band.

* * *

BC642C.—S. J. Bullimore, 119A Bridge Road, East Molesey, Surrey, would like to borrow or purchase circuit, handbook, and/or any conversion details.

AP61357 Receiver Unit 62M.—P. N. Biddilk, 2 Minstead Walk, Woodhouse Park, Manchester, 22, requires information on this unit. It is thought that the 62M could well be either the 1392 or P104 receiver.

* * *

B28 Receiver.—J. Whitaker, Suetts Farm, Bishops Waltham, Hants, wishes to buy or borrow the instruction manual. Also, any details of a v.h.f. transceiver (Rx RLS43, Tx RLS41, manufacturer A. T. and E. (Bridgnorth) Ltd.).

* * *

Tester Valve Type 4.—W. McLean, 16 Hillwood Terrace, Rosyth Dunfermline, Fife, Scotland, requires to buy or borrow manual or circuit.

* * *

Ekco VHF Model 1392.—B. Harper, 136 Gill Street, Benwell, Newcastle-on-Tyne, 4, wishes to purchase the manual or circuit.

* * *

CR100 Receiver.—B. Gordon, 72 Coldshott, Holland, Oxted, Surrey, requires the manual for this receiver.

* * *

R1155.—H. B. Hemingway, 45 Leycroft Way, Harpenden, Herts, wishes to buy or borrow the complete circuit diagram including the d.f. stages.

NEWS AND COMMENT

Seeing is Believing

A book has recently been published on the extraordinary reluctance of 38 witnesses to the murder, of a young woman in America, to intervene or do anything about it for the space of half an hour.

This astonishing demonstration of apathy prompted a schoolmaster to write to *The Times* commenting upon apathy and lack of concentration, particularly in children and young people. After disclaiming any "bee-in-bonnet" prejudice against television, he put forward a point of view on certain types of programme which was new to us and, we think, will be of interest to many of our readers.

The gist of the idea can be summarised in this quotation from his letter: "An over-familiarity with scenes of violence and disaster, watched from a comfortable armchair, can breed indifference and smother sympathy. The viewer is watching life as a passing show; he is not expected to take part in what he sees . . . feels no obligation to act when action is called for."

Some truth in it?

Holiday Reflections

It was very pleasant, while on holiday recently, not to be forcibly fed with radio programmes via transistor portables. Our impression, expressed in this column a year or two ago, that the use of transistor sets to the annoyance of others would abate, is probably true. The banning of their use in the royal parks, etc., and restrictions elsewhere, may have helped—it is not that we think they should be forbidden for outdoor use, but that the sound should be kept down.

However another small cloud, from the radio enthusiast's viewpoint, has appeared on the horizon. It is the use of walkie-talkies by persons without a transmitting licence. On a beach in Cornwall the writer saw two walkie-talkie sets being operated by a father and son, the latter being about 10 years of age and presumably not holding a transmitting licence. It is fairly well known that radio control enthusiasts have had their models damaged because walkie-talkies, used by unlicensed persons, have been operating on the same frequency and model aircraft, as a result, have hit the deck. In view of the amount of cheap Japanese transmitting apparatus now freely available, the dangers of the indiscriminate use of such equipment interfering with proper enjoyment of amateur radio is obvious. We trust that this matter is exercising the minds of those holding prominent positions in the appropriate amateur bodies.

Also, while on holiday, the use of the word radio in unusual contexts was noticed. A philatelist continued to use the word in the title of his firm, presumably because the shop from which he conducted his business was originally a radio shop. On the opposite side of the road was a public building, *conveniently* situated, where the trade name on the porcelain was "Radio".

We would be interested to hear from any readers who know of the use of the word radio in some unusual manner.

High-Fly Radio

The quiet of the mist-shrouded, jungle-clad peak of Borneo's Mount Kinabalu where according to local Kadazan lore departed spirits make their home, has lately been disturbed by the sound of the Gnome jet engine and whirling rotors of a Whirlwind 10 helicopter. The helicopter has been carrying radio equipment to Liang Liang, a radio station nearly 9,000 feet above sea level, more than half-way up the 13,450-feet peak—highest in South-East Asia.

Although Kinabalu is only 200 miles north of the Equator, one of the biggest problems was the weather. Gale force winds, drenching rain, dank mist and biting cold were all encountered, and some sorties had to be abandoned. On one occasion, with the engine at full power, the helicopter was descending at 200 feet a minute. Seconds later, with the stick depressed to give a descent rate of 2,000 feet a minute the aircraft was in fact rising at 1,000 feet a minute! The station will not be completed until the end of 1964, when it will begin to serve the whole of North Borneo, and the voice of the V.H.F. Station will be added to the voices of the "spirits on the mountain".

Politics

One of the reasons the writer of these notes was pleased to welcome the advent of B.B.C.2 was to provide an escape from the propensity of B.B.C.1 and the I.T.A. companies to put on identical type programmes at approximately the same times.

B.B.C.2 seemed to provide a golden opportunity for an alternative programme to be transmitted when a political broadcast was being made: the opportunity has not been taken. Whether we like it or not, at certain specified times, we must watch politicians perform, or nothing.

We can guess the public outcry there would be if it were now proposed that political sound broadcasts should be simultaneously sent out on the Home, Light, Third, Luxembourg, Caroline, and Atlanta programmes. We appreciate there are difficulties as competing systems are being used, but the general public have a right to expect their elected representatives to be able to solve this problem—a very minor one contrasted to those they are promising, at the time these notes are being written, to solve if only we will vote for Bloggs.

Miniaturisation

The first tiny pulsation of the heart of a bird developing inside an eggshell can be heard and recorded with an extraordinarily sensitive instrument developed in the United States.

With a sensitivity that can detect a single grain of salt falling a distance of one-third inch the instrument is expected to be of value in a wide variety of research applications.

Single Transistor Door Chime Repeater

By I. M. REES

LIKE K. V. R. BOWERMAN AND M. GEORGE[1] I AM also inflicted with a "Ding-dong" door bell which was difficult to hear above the sound of either the television or the radio, to say nothing of our children.

My approach to the problem was pursued along similar lines to the other two contributors. I set out to design a self-repeating unit which, when set into operation by the bell-push, would cause the chimes to repeat themselves for approximately 5 to 6 seconds after the push was released.

The result never fails to draw comment from callers, who insist firstly that they only pressed the button once and hope, secondly, that they haven't damaged the chimes or the circuitry.

Circuit

The simple circuitry involved is shown in the diagram. When the bell-push is pressed it connects the 9 volt battery to the repeater unit, charging C_3. After the bell-push is released the repeater continues operating until C_3 has discharged.

The repeater circuit operation is simple enough.

Initially, when the supply is applied to the repeater, TR_1 is conducting, its bias being fed via the normally closed contacts, RL1. The relay operates after C_2 has charged, opening contacts RL1 and closing contacts RL2, so connecting the chimes to their supply. This provides the "Ding". The relay is held on by the charging action of C_1, which enables TR_1 to continue conducting. Once C_1 is fully charged the bias on TR_1 is no longer existent, so collector current reduces. C_2 starts to discharge through the relay coil, after which the relay releases. This opens contacts RL2 and removes the chime supply, thus producing the "Dong". At the same time, contacts RL1 close, discharging C_1.[2] This cycle is then repeated over and over again as long as the supply voltage is applied and C_3 possesses sufficient charge.

None of the component values used are at all critical. The values specified give the following results on the prototype:

Repeating rate (number of "ding-dongs") per second—2

Total time of ringing after push button released —6 seconds

The chime is very much faster than was suggested by either of the previous authors, giving a very urgent but pleasant sound which cannot be missed.

Timing Cycles

If the constructor feels that he would like to change the timing cycles the following is a guide.

To increase the total repeating time after the bell-push is released increase the value of C_3. Reduce this value for shorter times.

To increase the repeating time between successive chimes, increase the values of C_1 and/or C_2. Reduce these values for shorter times.

Final settings of the timing interval may be made by adjusting the spring contact settings on the relay.

Due to the very high current drain of the chimes it was not found possible to operate the repeater from the same supply. A separate battery or transformer is required.

Most transistors will suit provided they can dissipate sufficient power for reliable operation. Types OC72, OC84, etc., are suitable.

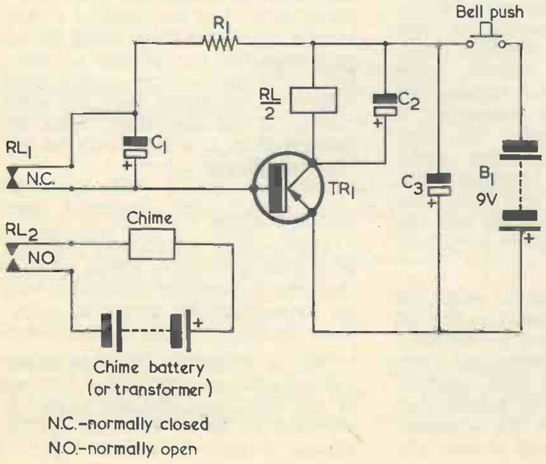

Components List

Resistor

R_1	4.7kΩ ⅛ watt 20%

Capacitors

C_1	1μF electrolytic 12V wkg.
C_2	30μF electrolytic 12V wkg.
C_3	1,000μF electrolytic 12V wkg.

Transistor

See text

Relay

RL2	P.O. type 3000 relay with 1kΩ coil RL2, one set of make contacts and one set of break contacts

Battery

B_1	9 volt battery

---

[1] K. V. R. Bowerman, "Door Chime Repeater", *The Radio Constructor*, February 1963.
M. George, B.Sc., "Multivibrator Door Chime Repeater", *The Radio Constructor*, July 1963.

[2] It would be advisable to insert a resistor of around 20Ω between either plate of C_1 and contacts RL1. This will reduce sparking and wear at these contacts.—EDITOR.

THE ELECTROSTATIC LOUDSPEAKER AND THE IONOPHONE

understanding radio

By W. G. MORLEY

A further article in the "Understanding Radio" series which, starting from first principles, discusses the basic theory and practice of radio

IN LAST MONTH'S ISSUE WE CONCLUDED OUR DISCUSSION of the moving-coil loudspeaker. We then carried on to a brief consideration of two alternative types of loudspeakers, these being the balanced armature and ribbon types.

We commence, this month, with the electrostatic loudspeaker.

The Two-Electrode Electrostatic Loudspeaker

It is interesting to note that there are two distinct and separate types of electrostatic loudspeaker. One of these is a relatively low-cost unit which may be used as a tweeter having somewhat poor performance, whilst the other is a much more costly version offering very good reproduction over the entire audio frequency range. The second version of the electrostatic speaker is a development of the first, a number of important design steps having been incorporated.

Fig. 239 (*a*) illustrates an initial approach towards the construction of an electrostatic loudspeaker. We have two flat electrodes, one being rigid and fixed, and the other flexible. If we were to connect a

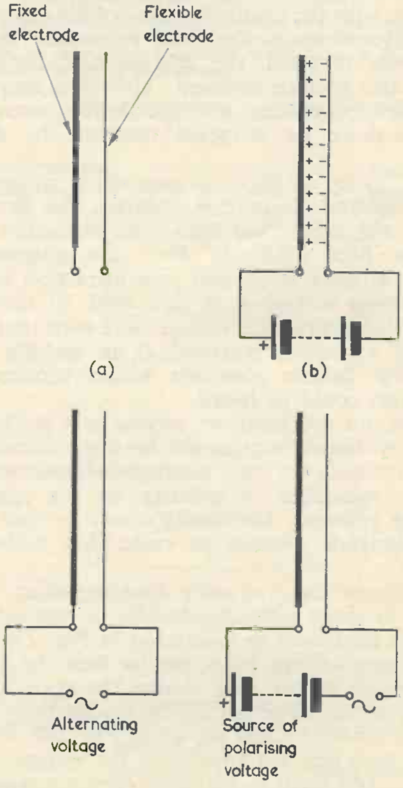

Fig. 239 (a). The basic elements of a two-electrode electrostatic loudspeaker

(b). If a battery is applied to the two electrodes, unlike charges appear on their surfaces and they are attracted together. The flexible electrode may then move towards the fixed electrode

(c). Applying an alternating voltage. The flexible electrode is attracted towards the fixed electrode twice during each cycle

(d). If a polarising voltage which is at all times greater than the alternating voltage is added, the attraction between electrodes occurs once per cycle only. The polarity of the polarising voltage is unimportant

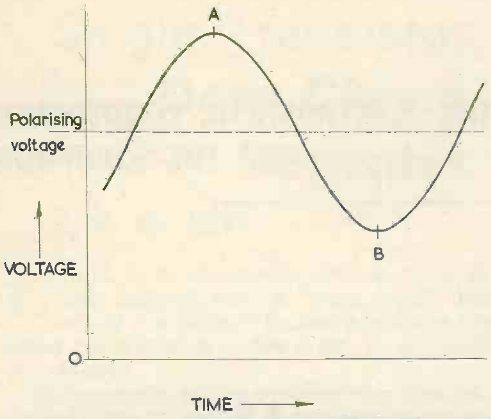

Fig. 240. The waveform resulting from the series combination of polarising and alternating voltages shown in Fig. 239 (d). The voltage applied to the electrodes does not change in polarity but in amplitude only

battery to the two electrodes, as in Fig. 239 (*b*), the inside surface of the electrode connected to the positive terminal of the battery would become positively charged, and the inside surface of the electrode connected to the negative terminal would become negatively charged. Unlike electrical charges attract each other, with the result that the flexible electrode would move closer to the fixed electrode. If the battery were reversed, the charges held by each electrode also become reversed. However, they are still unlike in character, and the flexible electrode will once more be attracted towards the fixed electrode.

In Fig. 239 (*c*) we apply an alternating voltage to the two electrodes. In this instance, the flexible electrode will experience maximum attraction towards the fixed electrode when the alternating voltage is at peak level, and zero attraction when the alternating voltage is at zero level. If the frequency of the alternating voltage were such that the periods of attraction occurred at an audible frequency, the flexible electrode would produce a sound which could be heard.

We have not yet, however, arrived at a workable loudspeaker design, because the flexible electrode is attracted towards the fixed electrode once for every half-cycle, regardless of polarity, in the applied alternating voltage. The result would be that the flexible electrode vibrates at twice that voltage's frequency.

To overcome this frequency doubling effect, it is necessary to apply a direct *polarising* or *bias voltage* to the two electrodes as illustrated in Fig. 239 (*d*), this polarising voltage being greater than the alternating voltage at any time during the cycle. The waveform appearing across the electrodes then takes up a form similar to that shown in Fig. 240, where it may be seen that the polarity of the voltage does not alter. The flexible electrode now experiences maximum attraction towards the fixed electrode at one half-cycle peak (point A) and minimum attraction at the following half-cycle peak (point B). Thus, the flexible electrode goes through only one cycle of movement for one cycle of the alternating voltage, and the frequency doubling effect is overcome.

The state of affairs we have just seen is similar to that which occurs if the permanent magnet is omitted from the magnetic earphone.[1] Without the permanent magnet, the earphone diaphragm is attracted towards the earphone pole-pieces twice for each cycle of the applied voltage. Incorporating a permanent magnet in the earphone has the same effect as applying a polarising voltage to the electrostatic loudspeaker, and it results in the production of sound at the fundamental frequency of the applied voltage, instead of at twice its frequency.

Our two-electrode assembly of Fig. 239 (*d*) is now theoretically capable of functioning as a loudspeaker, because the flexible electrode can be made to move in sympathy with the frequency and amplitude of the applied voltage. For a high level of sensitivity it is necessary for the flexible electrode to be very close to the fixed electrode. The latter has, therefore, to be perforated, as in Fig. 241, to prevent a fixed volume of air being trapped between the two electrodes and to allow the variations in pressure produced by the flexible electrode to pass through.

At this level of development we have the low-cost version of the electrostatic loudspeaker which was referred to above. A typical construction for a practical loudspeaker of this type is shown in Fig. 242 (*a*) and (*b*). In this design a perforated plate, the fixed electrode, appears at the front of the assembly. Immediately behind it is a thin flexible plastic sheet, on the reverse side of which is a metallised conductive coating. The conductive coating forms the flexible electrode. Behind this conductive coating is a flat pad of resilient material such as felt and, behind this again, a rigid sheet of insulating material. When the parts are assembled the resilient pad presses the plastic sheet against the perforated metal plate, whereupon the plastic provides the insulation between the fixed and flexible electrodes. Despite the simplicity of this construction, a useful level of sound may be produced by vibration of the flexible electrode when an alternating voltage is

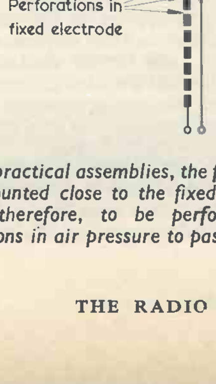

Fig. 241. In practical assemblies, the flexible electrode has to be mounted close to the fixed electrode. The latter has, therefore, to be perforated to allow variations in air pressure to pass through

---

[1] See "Understanding Radio", April 1964 issue.

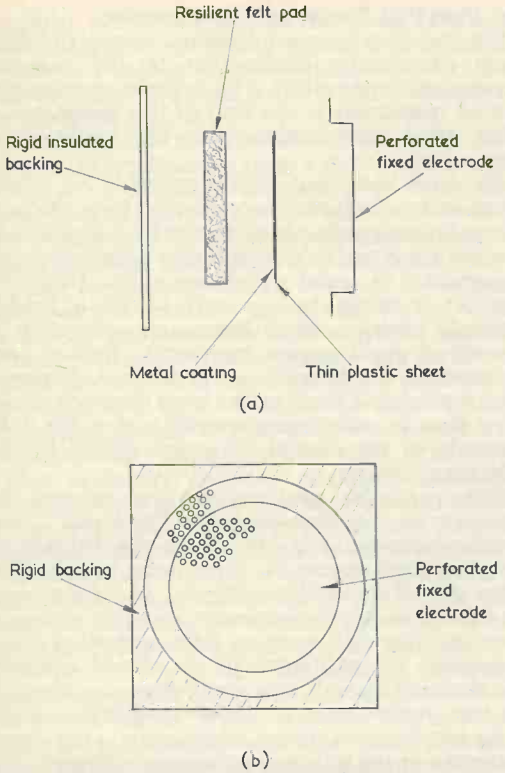

Fig. 242 (a). The component parts of a practical two-electrode electrostatic loudspeaker
(b). When assembled, the thin plastic sheet is pressed tightly against the back of the perforated fixed electrode. Lead-out connections are made to the perforated electrode and the metal coating on the plastic sheet

applied, this sound passing forward through the perforations in the fixed electrode. The sound passes backwards also, being absorbed by the resilient pad immediately behind the flexible electrode.

An alternative method of assembly is shown in Fig. 243 (*a*) and (*b*). In this design the fixed electrode is on the inside, it being covered by a flexible plastic sheet with a metallic coating on the outside. The two are pressed tightly together by a tough fabric stretched over the metallic layer on the plastic sheet and by a spring (not shown) inside the housing. Once more the metallic layer provides the flexible electrode, and it radiates sound outwards through the fabric. Sound is also radiated inwards, through the perforations in the fixed electrode.

The examples shown in Figs. 242 and 243 would have dimensions of the order of 6 to 10in across, and they are typical of the *two-electrode electrostatic loudspeaker*. Because the moving electrode is under considerable stress it is incapable of a high degree of movement, and it cannot offer any useful reproduction of the lower audio frequencies. In consequence, the device may only be employed as a tweeter. It should be added that the curved shape of the assembly shown in Fig. 243 then provides a wide angle of high frequency diffusion.

Apart from the lack of low frequency reproduction, there is a second and far more serious disadvantage with the two-electrode electrostatic speaker. This is due to the fact that the mechanical force causing the flexible electrode to move (from rest) is not directly proportional to the amplitude of the total applied voltage, but to the square of that voltage. When we initially examined the question of capacitance,[2] we saw that Q=CE, where Q is the quantity of electricity (in coulombs) held by a charged capacitor, C the capacitance, and E the applied e.m.f. It can be shown[3] that the mechanical force of attraction between the two plates is equal to $\frac{QE,}{2d}$ where d is the distance between them, with the result that this force is also equal to $\frac{CE^2.}{2d}$ Thus, if distance is assumed constant, the mechanical force acting on the flexible electrode of the two-electrode electrostatic loudspeaker is proportional to the square of the applied voltage.[4] Because of this relationship, the two-electrode electrostatic loudspeaker does not offer a true version, in sound, of the electrical signal applied to it. The sound it reproduces suffers from a relatively high level of distortion.

---

[2] In "Understanding Radio", April 1962 issue.

[3] The explanation concerning distortion which immediately follows is based on material in "High Quality Sound Reproduction", First Edition, by James Moir (published by Chapman & Hall Ltd.), and due acknowledgement is made here.

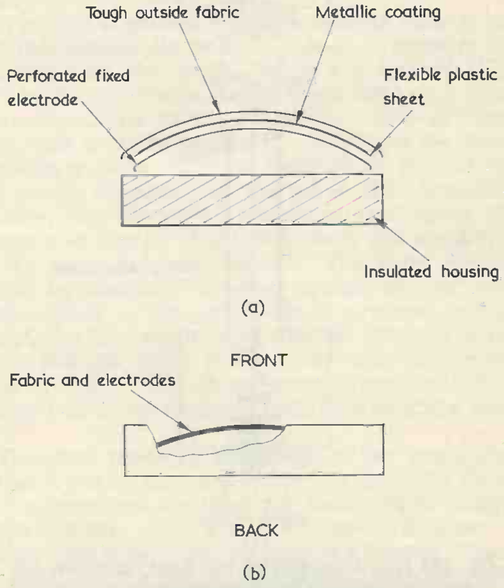

Fig. 243 (a). An alternative design, in which the fixed electrode is on the inside. The insulated housing is in the form of a shallow tray
(b). When assembled, the compressed fabric and electrodes do not extend above the upper edges of the tray sides

Despite this shortcoming, two-electrode electrostatic loudspeakers are used occasionally as tweeters, mainly on account of their simple construction and low cost. They are not employed in serious high fidelity applications. Typical polarising voltages may be around 250 to 600, with signal voltages of the order of 50 to 100. Such voltages may be obtained quite easily from audio frequency amplifiers employing valves (instead of transistors). The impedance presented by a two-electrode electrostatic loudspeaker consists almost entirely of a capacitive reactance, and special circuits may be needed to couple it to the associated amplifier.

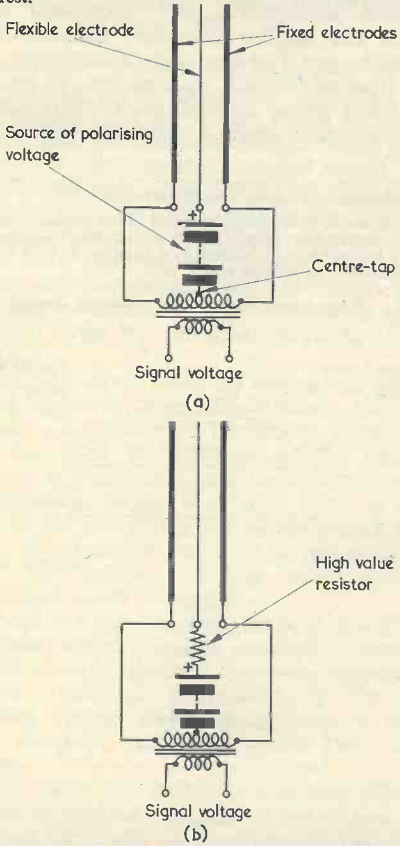

Fig. 244 (a). By employing two fixed electrodes, the flexible electrode may be maintained under considerably less stress. The fixed electrodes shown here and in (b) would, in practice, be perforated
(b). The simple process of inserting a resistor in series with the flexible electrode obviates nearly all the distortion which is evident with the two-electrode electrostatic loudspeaker

The Push-Pull Electrostatic Loudspeaker

We may now proceed from the simple two-electrode electrostatic loudspeaker to the *push-pull electrostatic loudspeaker*. This is the more expensive version mentioned at the start of this article which offers good reproduction over the whole audio range.

We have seen that it is impossible to obtain adequate low frequency reproduction from the two-electrode loudspeaker because the flexible electrode is under stress and is incapable of a large amount of movement. In order to obtain a low frequency response it would be necessary to use a flexible electrode having a much larger area and which is capable of much greater movement. Such a construction cannot be achieved in practice, however, since the reduced stress on the large electrode would allow it to be pulled permanently against the fixed electrode by the mutual attraction offered by the polarising voltage.

This particular problem can be resolved by changing to the three-electrode "push-pull" construction shown in Fig. 244 (*a*). In this diagram we have two fixed electrodes, these being mounted on either side of the flexible electrode. In consequence, the flexible electrode experiences an equal attractive force on either side, and very little mechanical stress is required to maintain it in the central position. The electrical signal is now applied to a transformer, the two outside ends of whose secondary connect to the two fixed electrodes, whilst a tap at the centre connects (via the source of polarising voltage) to the central flexible electrode. If, at any instant, the electrical signal causes one fixed electrode to have a potential higher than the polarising voltage, the other fixed electrode has a potential lower than the polarising voltage. Under these conditions the flexible electrode moves toward the fixed electrode with the high potential. Similarly, if the second fixed electrode has the higher potential, the flexible electrode moves in the reverse direction. The flexible electrode may, in consequence, move in sympathy with the frequency and amplitude of an applied signal.

The movement of the flexible electrode will not, nevertheless, be in direct proportion to the amplitude of the applied signal because, in much the same manner as occurred with the two-electrode loudspeaker, the mechanical force of attraction will tend to be proportional to the square of the applied voltage. When dealing with the two-electrode loudspeaker, we saw that the force of attraction is proportional to $\frac{QE}{2d}$, and that the E^2 expression only entered the relationship when we broke Q down into terms of C and E. If we could keep Q (the quantity of electricity held in charge) constant, the force of attraction would become directly proportional to E. In practice, it is possible to keep Q constant by the delightfully simple process of inserting a high value resistor in series with the flexible electrode, as shown in Fig. 244 (*b*). If the time constant given by this resistor in combination with the capacitance offered by the electrodes is long

---

[4] To obtain a fuller picture of the relationship, C should be expressed in terms of dimensions also. From "Understanding Radio" in the April 1962 issue we saw that C is equal to $\frac{KA}{d}$, where K is a constant, A is the area of one plate and d the distance between them. The expression for mechanical force of attraction then becomes $\frac{KAE^2}{2d^2}$. It is reasonable, in a simple analysis of this nature, to assume that d is fixed, since this enables us to obtain an idea of the mechanical force of attraction which may be applied to the flexible electrode when at rest.

compared with a half-cycle at the lowest frequency to be handled, it will be impossible for the quantity of electricity held in charge to change by any significant amount. The result is that Q can be considered as a constant.

Merely by the addition of a resistor we have changed the loudspeaker from a device which tends to reproduce sound in proportion to E^2 to one which tends to reproduce sound in proportion to E. The loudspeaker is, in consequence, capable of providing a true high fidelity performance.

A final step is still required, however, this consisting of using a material having high resistance for the flexible electrode. The high resistance material is needed to prevent the charge on the surface of the flexible electrode from redistributing itself during the course of a cycle. The flexible element could conveniently consist of a plastic sheet covered with a high resistance coating on both sides. The use of a high resistance electrode confers a secondary advantage, since it enables the sum of the polarising voltage and signal voltage to closely approach the theoretical breakdown voltage for the loudspeaker. If there is a risk of momentary breakdown due to an excessively large movement of the flexible electrode, the remaining air between this electrode and the fixed electrode becomes ionised and allows a small current to flow. The effective resistance between the flexible and fixed electrodes at this point (via the ionised air) is very high but it is still sufficient, in combination with the local resistance offered by the flexible electrode, to allow the potential between the two points to remain at a safe level. Thus, it is possible for occasional large movements of the flexible electrode to take place without the risk of sparks or corona.[5] It should be added that the resistance needed in the flexible electrode to prevent corona and sparking is considerably higher than that needed to prevent redistribution of the charge over its surface. Further protection is given by the provision of a coating of insulating material over the inside surfaces of the fixed electrodes.

An outstanding example of successful design in this field is offered by the "Quad" Electrostatic Loudspeaker manufactured by Acoustical Manufacturing Co. Ltd., Huntingdon. This unit is approximately 31in high by 35in wide and consists essentially of a shallow cabinet housing the fixed and flexible electrodes. These electrodes occupy almost the whole flat area offered by the model. A separate section is used to provide the lower frequencies, and the overall response is from 45 c/s to 18 kc/s. The polarising voltage is of several thousand volts, this being provided by components incorporated in the cabinet which derive their power from the mains supply. Also fitted is a step-up transformer to feed the electrical signal from the associated amplifier to the fixed electrode. As is to be expected, this loudspeaker radiates sound from the rear as well as from the front[6] and so it should not be placed directly against a wall.

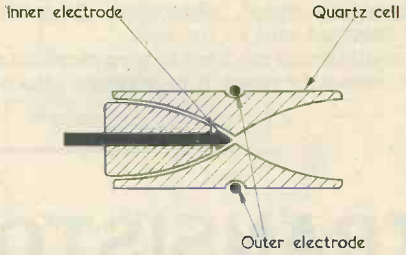

Fig. 245. Simplified diagram showing the basic construction of the Ionophone ionisation cell. The outer electrode completely encircles the cell

The main advantages claimed for the push-pull electrostatic loudspeaker, as compared with the moving coil loudspeaker, are good response to transients and smooth response.[7] With the electrostatic loudspeaker the entire sound-reproducing surface is acted upon by the mechanical force resulting from the applied signal whereas, with the moving-coil loudspeaker, the cone has to be driven from its centre.

The Ionophone

An interesting loudspeaker which has not, however, been in large-quantity commercial production is the *Ionophone*. This will now be considered briefly.

The basic operation of the Ionophone rests on the fact that ionised air tends to change in pressure for different ionisation levels. Air in a quartz cell (Fig. 245) is made to ionise by the application of a radio frequency signal to two electrodes. One of these electrodes is at the rear of the cell whilst the other encircles it. The resultant electrostatic field in the cell causes ionisation of the air in the immediate vicinity, the degree of ionisation and hence the pressure of the air depending upon the amplitude of the radio frequency signal. The latter can be varied by means of external circuits so that it is proportional to the amplitude of a sound-derived signal, the final result being that the pressure of the air in the cell varies in sympathy with the sound-derived signal. The sound output from the cell is brought up to an adequate level by coupling a horn to it.

The great potential advantage of the Ionophone is that it has no mechanical moving parts and therefore approaches the ideal for loudspeaker design. Unfortunately, the low frequency response is limited, and it may only be used as a tweeter. There is, also, the further disadvantage that the radio frequency signal needed for ionising the air needs to have a power level comparable with that of the

---

[5] If a potential is applied between two points in air (or any other gas), a very small current flows between them due to ionisation. This current increases with potential until a certain stage is reached where no further ionisation takes place. Current then remains constant over a relatively wide range of potential, after which it starts to increase again, leading eventually to corona (a blue discharge) and, finally, a spark. The current which flows in the instance referred to in the text lies in the steady range before the onset of corona.

[6] For this reason, a loudspeaker of this type may be referred to as a "doublet".

[7] A transient sound causes a sudden short-lived change in signal level, a typical instance being the clash of cymbals.

audio frequency signal, whereupon the extra components required add to the cost.

The Ionophone is reported to give excellent results over the frequency range it is intended to cover.

Next Month

In next month's issue we shall conclude the subject of loudspeakers and shall turn our attention to the valve.

TRANSISTOR THERMOSTAT

By J. SPENCER, M.A.

THE DEVICE TO BE DESCRIBED WAS DEVELOPED FOR an investigation of temperature changes in the engine coolant of the writer's car. A period of intermittent boiling had occurred during drives of an hour or so. Removing and flushing out the radiator showed that this was almost certainly due to excessive rusting in the cylinder block. The rusting had produced a sludge which slowly accumulated in the radiator passages until the circulation, and hence the cooling, was utterly inadequate to allow more than short periods of fast cruising conditions. The writer's car is typical of most modern models in that it possesses an engine-driven coolant pump with a minimum of coolant volume in a pressurised system, and there is no indication of temperature for the driver. This means that on a two or three-hour run, for example, it is possible to boil the coolant off almost entirely if the radiator is operating at reduced efficiency. The need for a simple and reliable temperature indication under these conditions is therefore self-evident. Also, it is preferable for the device to be inexpensive.

Schmitt Trigger

Various ideas were considered on the assumption that a warning device was needed which would tell the driver that the coolant temperature had reached a pre-determined critical value. Transistors seemed the most appropriate circuit elements to operate from a 12 volt car battery. Also, because transistors are ideally suited to switching applications, the choice of. design was the Schmitt trigger circuit. For those who may be unfamiliar with it, the Schmitt trigger is a d.c. equivalent of the more familiar flip-flop or mono-stable switch. The circuit changes state when the input signal—a change in d.c. level which is applied to the base of one transistor—rises above a critical level determined by the circuit resistances in combination with the transistor operating points. The circuit reverts to its original state when the signal level has fallen to a level slightly lower than its value on the original change. This difference, called the hysteresis or backlash of the trigger, is always present in simple forms of this circuit and the aim of design is to minimise its magnitude. It is possible to eliminate backlash almost completely by using a more sophisticated design involving more than two transistors. In the present case it was considered satisfactory to accept a moderate amount of backlash in order to obtain a simple and inexpensive design.

The signal voltage for the trigger is provided, quite simply, by means of a voltage divider across the battery supply. One of the resistors in this divider is arranged to vary in response to changes in the measured condition. An obvious choice of variable resistor for temperature measurement is a thermistor, which has a large negative temperature coefficient of resistance. The type of thermistor which is produced specifically to measure temperature changes is relatively expensive but, for certain ranges of temperature, the less expensive type produced for current limiting is perfectly suitable. If the second resistance is made variable as well it is then possible to pre-set the point at which the trigger operates by simply setting the wiper position on the variable resistor to the required position. With the circuit shown in Fig. 1, when the variable resistor, R_1, is increased in value the circuit triggers at lower temperatures, i.e. when the thermistor resistance is higher.

In operation the device is very simple to use. The calibrated variable resistor, R_1, in Fig. 1, is set to a value which corresponds to the lowest temperature at which a warning is required. When this temperature is reached the device will trigger and so initiate the warning. If it is desired to follow the changes of temperature after the first warning is noted, R_1 is reduced in value, i.e. the wiper is turned in the direction of increasing temperature until the device triggers back to its original state and the warning is cancelled. As soon as this occurs R_1 is set to the next higher value of temperature at which a warning is required. In this manner the course of the temperature changes over a period of time can be observed. If, after a given setting has been made, no warning appears, then the temperature has reached a maximum value which is somewhere between the last setting at which a warning was received and the present setting. The exact value is obtained by slowly increasing R_1, i.e. in the direction of reducing the temperature setting, until the circuit triggers. The setting of R_1 corresponds to the maximum temperature. The device thus acts as a simple

Components List (Fig. 1)

Resistors

(All fixed resistors ½ watt 10% unless otherwise stated)

R_1	20kΩ potentiometer
R_2	5.6kΩ
R_3	910Ω
R_4	120Ω 5%
R_5	8.2kΩ
R_6	2.7kΩ
R_7	220Ω

Semiconductors

$TR_{1,\,2}$	OC83
D_1	OA81

Relay

Type 600 with 600Ω coil

Thermistor

TH_1	Brimar type CZ10

Switch

SW_1	Push to break

thermostat for any given setting but by re-setting as each warning is received it provides the same effect that a direct reading thermometer would give.

Tolerances

The thermistor specified in this circuit is manufactured with a 20% tolerance on the nominal resistance at a given ambient temperature. Also, transistors vary from one to another in their characteristics, so that it is necessary to calibrate the device when it is completed. All that is needed is a controllable source of heat and a thermometer which covers the range 50° to 110°C. The actual calibration procedure depends on whether one is interested in receiving a warning when the temperature has either risen to a pre-set level or fallen to a pre-set level. The difference here is of course due to the trigger "backlash". If both directions of change are of interest then the variable resistor must be calibrated for them. The scales will be similar except that the "falling" scale will be displaced by about 15°C in an upward direction with respect to the "rising" scale.

Assuming that an upward calibration is required, heat the thermistor slowly until the temperature corresponds to the lowest required calibration point. The variable resistor is held at a minimum value until the calibration temperature is reached. It is then slowly increased until the circuit triggers. The position of the wiper at this point is the first calibration mark. The wiper is now returned to minimum resistance and the thermistor is heated to the next calibration temperature. The procedure just described is repeated, and so on through the required scale range.

The procedure for a downward calibration is the exact converse of that described above. The variable resistor is held at the position of maximum resistance until a calibration temperature is reached and, of course, the thermistor is progressively cooled throughout the measuring range.

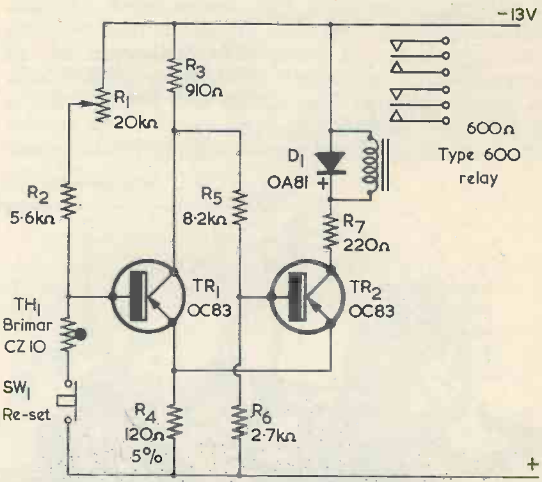

Fig. 1. The circuit of the transistor thermostat. The temperature range covered is from approximately 55 to 105°C. The trigger is "off" with approximately 2.1 volts on the base of TR_1, and is "on" with approximately 1.3 volts

It is advisable to make the temperature changes slowly to avoid the possibility of calibration errors due to thermal lag between the thermistor and its surroundings. Try to allow about 10 seconds at each calibration temperature before determining the setting at which the circuit triggers.

The re-set switch shown in Fig. 1 is necessary at temperatures near the top end of the measuring range. At temperatures of about 85°C and above it will be found that the circuit cannot be switched back, after it has triggered, by reducing the variable resistor. When this happens pressing the re-set switch will do this and thus allow another temperature determination to be made. It is not wise to overcome this effect by reducing the value of the fixed resistor in series with the variable resistor because too high a current would flow in the thermistor. The result would be heating of the thermistor by the flow of current. Of course, if the temperature has risen to a value well above the calibration range of the device, pressing the re-set switch will not trigger it back. The device is then no longer capable of discriminating changes until the temperature returns to its normal range. In effect the re-set switch covers that part of the range of the device over which backlash is beyond the control of the variable resistor but over which the device is capable of measurement.

Construction

The notes on construction which follow are merely intended to be a guide as to what can be done for the application described. Other applications will probably demand different solutions, and these will, no doubt, occur to the experimenter. The actual circuit can be assembled in any way that is

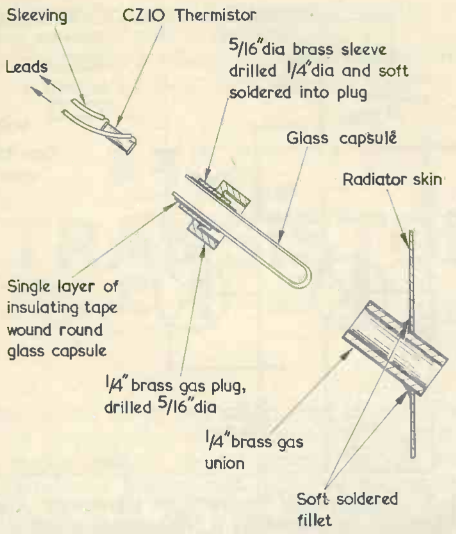

Fig. 2. Exploded cross-sectional view showing how the thermistor element is fitted to the engine. The glass capsule is packed with paraffin wax

convenient. In the version built by the author the whole of the circuit, excluding only the thermistor, was mounted on the lid of a tin which measured 4 by 3in. This permitted easy inspection and the carrying out of modifications. The tin also acts as a cover. In fact, apart from a change in the value of the fixed resistor in the voltage divider, and changes in the transistors to see whether this upset the calibration, no other alterations were made. It may be remarked, in passing, that transistor changes had very little effect.

The most difficult practical problem to solve was to make a leak-proof seal for the temperature measuring element. After several attempts the arrangement shown in Fig. 2 proved to be successful. The glass capsule which houses the thermistor is easily made in the following way. A piece of glass tubing of 4mm bore is cut to the required length. One end is first warmed and then heated to red heat in a gas flame, during which time the tube is rotated continually. As the glass melts the surface tension draws in the rim until finally the tube seals itself completely, and it then looks like a small test-tube. A paraffin wax filling was added to improve the thermal contact between the thermistor and its surroundings. The thermal lag of the element is of the order of 5 to 15 seconds, which is adequately short for the types of measurement for which the device is suitable.

In Fig. 2 the brass sleeve fitting into the brass plug was fabricated from a piece of $\frac{5}{16}$in diameter brass $\frac{1}{4}$in long and drilled $\frac{1}{4}$in axially. This is soft soldered into the drilled hole in the plug. The single layer of insulating tape is wound around the glass tube. This makes it necessary to work the tube into the plug and sleeve assembly until the tape is visible at both ends of the sleeve. The tape thus acts as packing. When the plug is screwed on to the union, the tape is compressed tightly between the inner face of the plug and the end of the union.

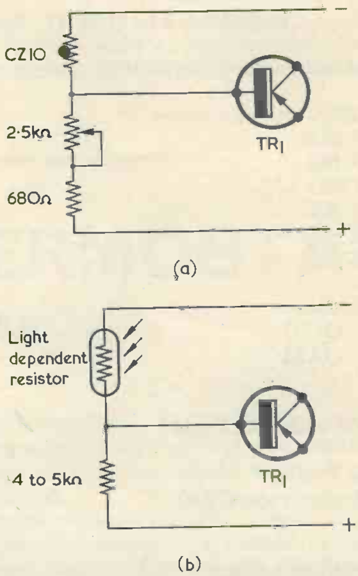

Fig. 3 (a). An alternative circuit, in which the measuring range is approximately 0 to 40°C

(b). An experimental arrangement in which the circuit is triggered by a light dependent resistor

Modifications

The device is easily modified to perform other types of measurement and to cover other temperature ranges. Two alternatives which have been tried are shown in Fig. 3. Arrangement (*a*) is well suited to an automatic warning or control device for frost prevention in a greenhouse, for example. The current consumption is approximately 20mA so that the device is reasonably economical to run continuously.

The arrangement in Fig. 3 (*b*) illustrates the use of the device as a light failure warning or as a detector of the appearance of light. It is important to note that this circuit cannot be pre-set to different lights levels. This is because the L.D.R. has a fairly high resistance and so prevents the adequate flow of base current from TR_1 unless it is strongly illuminated. On the other hand, if it is too strongly illuminated there is a risk that too high a current will flow through it from the battery terminals and so cause damage. The L.D.R. was a surplus item of unknown origin. If the characteristics of the type are known then it may well be possible to allow some degree of pre-set control. The circuit shown represents a compromise which worked reliably in practice. With any optical sensing device it is always possible to introduce some degree of variation in sensitivity by changing the light gathering arrangements, or a further possibility in the present case might be to shunt the L.D.R. by a resistor.

Conclusion

In conclusion the circuit shown in Fig. 1 has proved very useful and reliable over dozens of hours' operation. It is easily possible to follow temperature changes of 2° or 3°C. although its accuracy over a period of time is unlikely to be as good as this unless the transistors are maintained at a reasonably constant temperature and the supply voltage is similarly held accurately constant. Although adding to the cost, the latter could be dealt with very effectively by zener diode stabilising. The numerous possibilities of the circuit will certainly occur to readers and among these possibilities may well be one which is just right for a single particular problem.

In Your Workshop

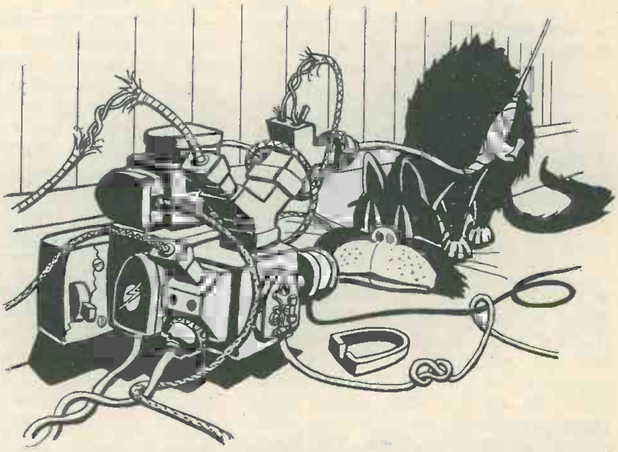

N.P.N. transistors are now finding their way into British-manufactured radio receivers. In this episode Smithy the Serviceman, aided as always by his able assistant Dick, discusses the functions of these transistors in complementary output stages.

"WHY," COMPLAINED DICK, "DO they always have to keep changing things?"

With a sigh, the long-suffering Serviceman put his soldering iron down on its rest and turned his attention to his assistant.

"Has anyone ever told you," he remarked conversationally, "that you're a drip? What's upset you now?"

"It's these new transistors," complained Dick, indicating with disgust the service sheet on his bench. "Up to now, all my transistors had arrows pointing inwards. Now the arrows have started pointing outwards!"

"That," said Smithy heavily, "is because they're n.p.n. types."

Trouble With Transistors

"I *know* they're n.p.n. types," replied Dick indignantly. "I'm not as dim as all that."

"Then what are you moaning about?"

"I'm complaining," replied Dick aggrievedly, "because we're been chugging along quite happily, for ages now, with p.n.p. transistors in all the radios we handle. Everything has been nice and straightforward, and all I've had to remember is that you use a negative h.t. line with transistors instead of a positive h.t. line as happens with valves. And what happens?"

"I don't know," said Smithy, "what *does* happen?"

Dick turned a heavy scowl on the Serviceman.

"Just when everyone's got used to p.n.p. transistors," he said darkly, "they start sneaking in the n.p.n. types. They're very crafty about it, too. They slip one n.p.n. transistor into each set when they think nobody's looking."

Dick paused for a moment, then assumed a condescending expression.

"Of course," he remarked patronisingly, "you know the reason for all this, don't you?"

"Not really," replied Smithy, "but I'm always prepared to listen."

"The reason," pronounced Dick, "is automation."

"Automation?"

"Automation," repeated Dick firmly. "It's all these automatic production lines which they've got controlled by computers and which are turning out transistors by the million. What's happened is that one of the computers has gone up the spout and the plant it controls has spent all its time making n.p.n. transistors when it should have been churning out p.n.p. transistors! The result is that they've suddenly found they've got enormous great stacks of n.p.n. transistors to use up. And that," concluded Dick triumphantly, "is why they're trying to get rid of them by slipping one into each set that goes out."

But Dick's last words were lost in a gale of laughter from the Serviceman.

"Dear oh dear me," said Smithy, when he was eventually capable of speech. "You come out with some codswallop at times, Dick, but this is the best I've heard yet!"

"All right then," said Dick aggrievedly, "*you* tell me why these odd n.p.n. transistors are appearing in the radios we service."

"The answer's simple," replied Smithy. "It so happens that, in this country, the pattern of transistor manufacture for domestic radios has concentrated on p.n.p. types. In consequence, pretty well all the transistors we've bumped into

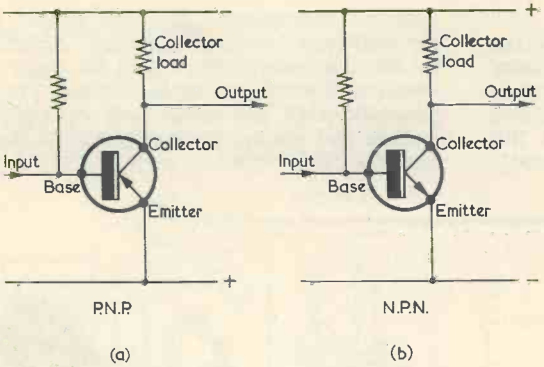

Fig. 1 (a). The p.n.p. transistor connected in the basic earthed emitter mode. For simplicity, stablising components are omitted
(b). The n.p.n. transistor in the earthed emitter mode. The circuit is the same as in (a), except that the supply polarity is reversed

in common-or-garden British transistor receivers have been p.n.p.'s. If we'd been in America over the last ten years or so, we would probably be just as familiar with n.p.n. as we are with p.n.p. transistors, as both seem to be used almost equally over there. The same applies to Japan. Indeed, some of the Japanese transistor radios have more n.p.n. than p.n.p. transistors in them. So far as the U.K. is concerned I, for one, am jolly glad to see that n.p.n. types are at last beginning to filter through. I was getting bored stiff with handling nothing else but p.n.p.'s all the time!"

"It's all very well for you," snorted Dick. "You're adaptable. I'm not!"

"You don't need to be particularly adaptable to deal with n.p.n. transistors," said Smithy. "All you have to bear in mind is how the transistor works when it's connected up in the earthed emitter mode. A p.n.p. transistor has a negative supply line for the collector and base bias (Fig. 1 (*a*)) whilst an n.p.n. transistor has a *positive* supply line for the collector and base bias (Fig. 1 (*b*)). The n.p.n. transistor is, as it were, a mirror-image of the p.n.p. transistor. It works in exactly the same manner, but all polarities are reversed. Incidentally, the arrow-head used to depict the emitter helps you out quite a bit here. In both cases it indicates the direction in which conventional current flows."

"You mean," queried Dick, "current flowing from positive to negative?"

"That's right."

Complementary Output Stage

Dick pondered for a moment.

"That's all very well," he said, pointing to the service sheet on his bench. "But it still doesn't get me out of trouble with the circuit I've got here. Just look at it?"

Smithy peered over, and glanced briefly at the section of the circuit indicated by Dick's finger.

"All you've got there," he remarked shortly, "is a complementary output stage employing a p.n.p. and an n.p.n. transistor. These are in Class B, and one handles the negative-going half-cycles of the signal whilst the other handles the positive-going half-cycles. The stage is described as being "complementary" because each transistor complements, or supplements, the other."

Dick was visited by sudden inspiration.

"I see," he exclaimed. "In other words, it's just the same as theatre tickets!"

Smithy passed a weary hand through his thinning hair.

"I must," he pronounced resignedly, "be getting past it. What on earth has a complementary output stage got to do with theatre tickets?"

"It's obvious," said Dick impatiently. "A complementary output stage has two transistors. At the same time, complimentary theatre tickets come in twos as well."

"One of these days," commented Smithy bitterly, "I'm going to invest in a dictionary so that you can learn at least the rudiments of the language you fondly imagine you're speaking."

"I've got no time for dictionaries," replied Dick scornfully. "You can't look up a word in one to find its spelling unless you know how to spell it in the first place. So what use are they?"

"Let us," said Smithy hastily, "get back to this complementary output stage. If we confine ourselves to electronic matters it's just conceivable that we might both be able to converse on the same plane."

Smithy pulled up a stool, sat down alongside his assistant and drew the circuit diagram (Fig. 2) towards him.

"If you look at the circuit," he continued, "you'll find that we have an a.f. amplifier in the TR$_4$ position, a driver in the TR$_5$ position, a p.n.p. output transistor in the TR$_6$ position, and an n.p.n. output transistor in the TR$_7$ position. The transistors before TR$_4$ are the mixer-oscillator and the two i.f. amplifiers, and they don't concern us here. TR$_4$, as you will note, follows the receiver volume control."

"Fair enough," said Dick, settling himself comfortably. "I'm with you up to now."

"I should jolly well hope so," grunted Smithy, "seeing that we haven't even started yet! Now, TR$_4$ amplifies the a.f. applied to its base, passing this on, via a coupling capacitor, to the base of TR$_5$. The collector of TR$_5$ connects directly to the base of TR$_7$ and, via several resistive components, to the base of TR$_6$. For the moment, however, we're going to combine those resistive components into a single fixed resistor, which we'll call a 'bias resistor'. This 'bias resistor' has, typically, a resistance around 100Ω or so. So far as a.f. signal is concerned, the bias resistor has very little effect, and it can be assumed that the a.f. on the collector of TR$_5$ is applied direct to the bases of both TR$_6$ and TR$_7$."

"What," asked Dick, "is the bias resistor for?"

"It's to provide bias for the output transistors," replied Smithy. "The collector current of TR$_5$ flows through it, carrying on, via the 680Ω resistor and the loudspeaker voice coil, to the negative supply line. This collector current causes a small voltage drop to appear across the bias resistor, its lower end being positive and its upper end negative. If you look at TR$_6$ and TR$_7$, you'll note that conventional current, from the positive supply line, flows up into the collector of TR$_7$, passes through the emitter of TR$_7$ into the emitter of TR$_6$, and finally reaches the negative supply line via the collector of TR$_6$. It flows, incidentally, in the direction indicated by the emitter arrow-heads. Since both transistors are in series they must—in the absence of signal of course—pass the same current. However, due to the presence of the bias resistor, the base of TR$_7$ is a wee bit positive of the base of TR$_6$. Now, TR$_7$ is an n.p.n. transistor, and its base has to go positive of its emitter if it is to conduct. At the same time, TR$_6$ is a p.n.p. transistor, and its base has to go *negative* of its emitter for conduction to take place. Since the two emitters are joined together, the voltage dropped across the bias resistor causes the base of TR$_7$ to go slightly positive of its emitter and the base of TR$_6$ to go slightly negative of its emitter, whereupon both transistors pass a current. The positive bias voltage, relative to emitter, on the base of TR$_7$ may not necessarily be equal to the negative bias voltage, relative to emitter, on the base of TR$_6$, but this doesn't matter. What happens is that the two transistors share the voltage dropped across the bias resistor in such a manner that both pass the same emitter-collector current."

"Blimey," remarked Dick, "that bias resistor carries out rather a useful little job, doesn't it?"

"It does, indeed," agreed Smithy. "It is a very important component and, as I'll explain in a minute, set manufacturers go to quite a lot of trouble to ensure that it has the correct value. By the way, you haven't asked me yet why we need to bias the output transistors in this manner."

"That's a point," admitted Dick thoughtfully. "Let me cogitate! We've been saying that there's only a small voltage dropped across the bias resistor, so that might give me a clue. Ah, I've got it! Both output transistors are in Class B, but they still need a small standing bias to prevent crossover distortion."

"You have," said Smithy approvingly, "knocked the nail right on the head. To prevent crossover distortion it's necessary for both transistors to pass a small current in the absence of signal, and this is achieved by reason of the biasing voltage which appears across the bias resistor. To prevent excessive distortion, which would be given by too low a bias voltage, or excessive battery drain, which would be given by too high a bias voltage, it is necessary for the bias resistor to have just the right value. And, having settled that little point for the moment, let's take a shufti at the rest of the circuit."

Applying A.F.

Smithy paused and cleared his throat.

"Let's next," he resumed, "pump a bit of a.f. into the base of TR$_4$. We'll start off with a half-cycle which causes the collector of TR$_5$ to go positive. TR$_5$ collector drives the base of TR$_7$ positive as well and, since TR$_7$ is an n.p.n. transistor, it passes increased current, causing its emitter to go positive also. At the same time the base of TR$_6$ similarly goes positive but, since this is a p.n.p. transistor, the positive-going signal merely causes it to approach, or go into, cut-off. On the following half-cycle of a.f. the collector of TR$_5$ goes negative. So also does the base of the p.n.p. transistor TR$_6$, which consequently passes an increased current and causes its emitter to go negative as well. TR$_7$ has little interest in the proceedings on this occasion, however, because the negative-going signal on its base merely makes it approach, or go into, cut-off. As you can see, the n.p.n. transistor provides the output voltage change for positive-going half-cycles, whilst the p.n.p. transistor provides the output voltage change for negative-going half-cycles. A point I haven't mentioned yet is that both transistors work as emitter-followers, the n.p.n. transistor functioning as an emitter-follower for positive-going half-cycles and the p.n.p. transistor functioning as an emitter-follower on negative-going half-cycles. I didn't bring up the emitter-follower business before, because I wanted to concentrate upon explaining how each transistor handles its half of the input signal. Nevertheless, it's emitter-followers that they are."

"If that's the case," interjected Dick, "the a.f. voltage at the junction of the two emitters will be almost equal to the a.f. voltage at the collector of TR$_5$."

"That's right," confirmed Smithy. "And that a.f. voltage is finally applied direct to the 15Ω voice coil of the speaker via the 200µF electrolytic capacitor. Whereupon the speaker gives forth music of the utmost clarity, and joy in the achievement is reflected on the faces of all bystanders!"

"Dig you," said Dick, impressed. "I thought it was *me* who was supposed to be on the wrong plane today. Incidentally, there's one little point that worries me."

"Oh yes," said Smithy encouragingly, "and what's that?"

"Why," asked Dick, "is the top end of the 680Ω collector load resistor for TR$_5$ returned to the hot side of the speaker instead of to the negative supply line?"

"There's a good reason for that," replied Smithy. "When an a.f.

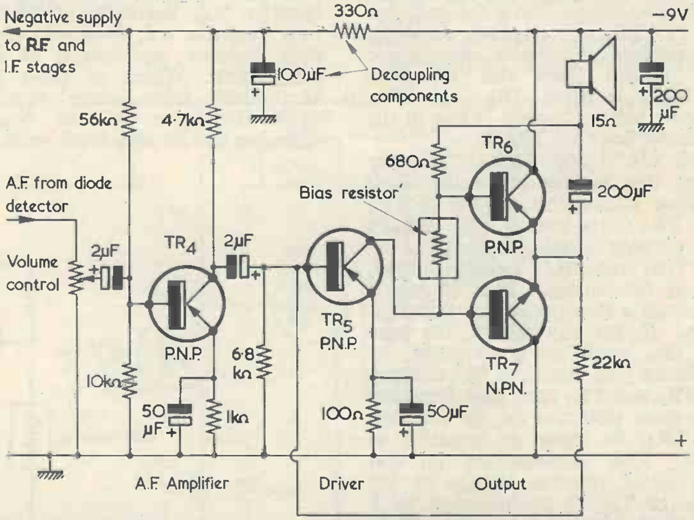

Fig. 2. A typical circuit, with representative component values, showing a.f. amplifier, driver and complementary output stage in a transistor receiver. The "bias resistor" coupling the bases of TR$_6$ and TR$_7$ would consist, in practice, of several resisitive components offering a total resistance of, typically, 100Ω. The 22kΩ resistor coupling the emitters of TR$_6$ and TR$_7$ to the base of TR$_5$ represents a feedback circuit shown in partly simplified form. The value of the resistor might require adjustment according to the transistor types employed. In a practical circuit, TR$_5$ and TR$_6$ could be type OC81M, and TR$_7$ an AC127

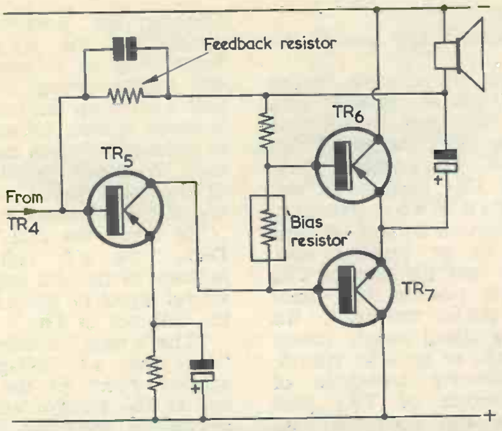

Fig. 3. Some receivers dispense with the d.c. coupling represented by the 22kΩ resistor in Fig. 2, employing purely a.c. feedback from the speaker to the base of TR$_5$. A capacitor may be connected across the feedback resistor to provide top-cut. As is shown later, in Fig. 6, the base of TR$_5$ is returned to the positive supply line via a direct coupling from TR$_4$

signal is applied and the collector of TR$_5$ goes negative, so also do the emitters of TR$_6$ and TR$_7$ *and*, via the 200μF capacitor, the hot side of the speaker as well. Similarly, the hot side of the speaker goes positive when the collector of TR$_5$ goes positive. Also, the change in voltage at the hot side of the speaker is virtually the same as that at the collector of TR$_5$. The result is that the voltage across the collector load of TR$_5$ is pretty near constant, whereupon practically the whole a.f. output from this transistor is used to drive TR$_6$ and TR$_7$. Hardly any a.f. power is lost in the collector load of TR$_5$."

"I see," said Dick. "Another thing that puzzles me is the 22kΩ resistor joining the emitters of TR$_6$ and TR$_7$ to the base of TR$_5$. What's the purpose of this resistor?"

"That resistor," replied Smithy, "does two things. First of all, it provides a measure of d.c. stabilisation. If, for any reason, the base of TR$_5$ tends to go positive, its collector goes negative. The emitters of TR$_6$ and TR$_7$ have approximately the same potential as the collector of TR$_5$, so these go negative as well. The consequence is that the initial positive change at the base of TR$_5$ is counteracted by a negative change via the 22kΩ resistor. A similar counteracting effect takes place if the base of TR$_5$ tends to go negative. These conditions exist at a.f. as well, with the result that the second function carried out by that 22kΩ resistor is to apply negative a.f. feedback, giving an improvement in quality. In practice, however, most manufacturers don't seem to use this feedback circuit for both functions. In some sets, for instance, you'll find that a resistive coupling exists between the output emitters and the base of the driver, but that this is decoupled to the positive supply line by a large-value bypass electrolytic. A purely d.c. coupling is then achieved, either with no negative a.f. feedback at all, or with negative a.f. feedback which only assumes significance at low frequencies. Which of these two alternatives takes place depends upon the value of the bypass capacitor and its associated resistors.

In other sets you may find that the feedback resistor is taken from the hot side of the speaker instead of the output emitters (Fig. 3), so that negative a.f. feedback takes place but there is no d.c. stabilising effect. In this case, a small-value capacitor may sometimes be shunted across the feedback resistor to give increased negative feedback at the higher audio frequencies."

Variations On A Theme

"Well, that seems to clear up this output stage," remarked Dick. "I can understand its operation a lot more easily now."

"It isn't too difficult when you start digging into it," commented Smithy. "There are still a few points I haven't explained yet, though."

"Oh yes," said Dick, "and what are those?"

"They're mainly variations on the basic theme we've just discussed. In some sets you'll find small-value emitter resistors in the output stage. (Fig. 4). These will each have a resistance of 2 to 4Ω or so, and they serve the same function as do the low-value emitter resistors in conventional Class B output stages using two p.n.p. transistors. Some sets which do not take d.c. feedback from the output emitters employ an adjustable circuit for ensuring that the junction of the two output emitters is kept at the right potential, which is fairly close to half the battery voltage. A correct potential here is desirable because, if the collector-emitter voltage of one output transistor is

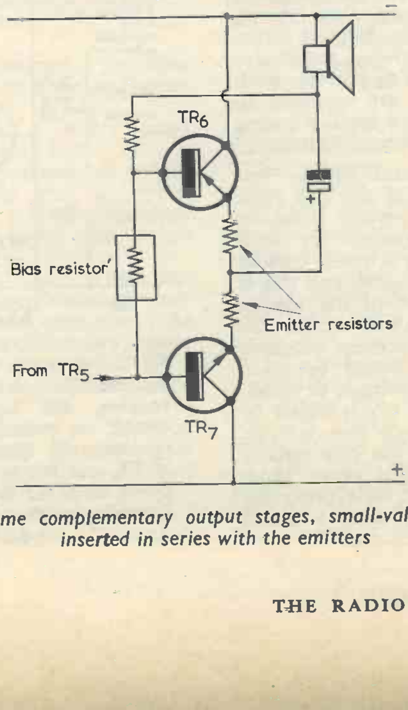

Fig. 4. In some complementary output stages, small-value resistors are inserted in series with the emitters

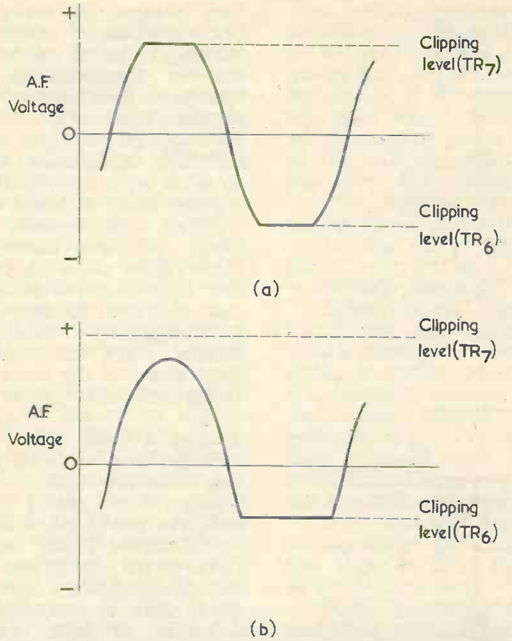

Fig. 5 (a). The potential at the junction of the two output emitters should be close to half the battery voltage, so that both have approximately the same emitter-collector voltage. When a high level a.f. voltage is applied, each will then clip (i.e. give no further amplification) at about the same point on successive half-cycles
(b). In this instance, the emitter-collector voltage for TR$_6$ is considerably lower than that for TR$_7$, with the result that it clips at a much earlier point on the negative half-cycle. The resultant distortion is considerably worse than occurs in (a)

considerably lower than that of the other, it will start to clip high level a.f. signals earlier than it should do. (Fig. 5). The correct voltage at the junction of the two output emitters is obtained by coupling TR$_4$ directly to TR$_5$, and inserting a preset variable resistor in the emitter circuit of TR$_4$. (Fig. 6) Adjusting this resistor varies the collector voltage of TR$_4$ and, thence, the collector voltage of TR$_5$. As we have seen, the latter controls the voltage at the junction of the output emitters, and so the chain of control is complete. The variable resistor is, therefore, adjusted to give an output emitter voltage, relative to the positive supply line and under no-signal conditions, which corresponds to that specified in the service instructions for the receiver."

"That's an interesting approach," commented Dick. "Any other variations on the basic complementary output circuit?"

"The only other important variations," replied Smithy, "appear in the 'bias resistor' we mentioned earlier. You'll remember that, although your service sheet showed this as a combination of several resistive components, we decided to look upon it for the time being as a single resistor having a value of 100Ω or so. The actual circuit shown in your service sheet consisted of a preset resistor in series with a parallel combination of a fixed resistor and a thermistor." (Fig. 7 (*a*)).

"Quite a gubbins, in fact," commented Dick.

"Not really," said Smithy. "The function of the thermistor, which in this case is a component having a very small physical size, is to counteract changes in ambient temperature. If ambient temperature rises the two output transistors tend to draw more current. But the temperature rise also causes the thermistor to reduce in value, whereupon the bias voltage applied to the two output transistors becomes reduced as well. This counteracts the initial increase in transistor current. The reverse effect, giving an increase in bias, occurs when the ambient temperature falls. The thermistor may also help to counteract the effect of falling battery voltage. When battery voltage reduces, the current through the thermistor drops, whereupon its resistance may increase slightly and offer sufficiently increased bias to prevent excessive crossover distortion. In the present circuit the thermistor is shunted by a fixed resistor which modifies its action. The function of the preset variable

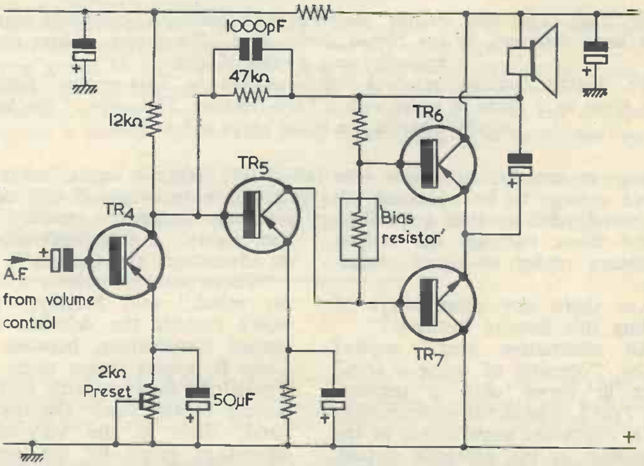

Fig. 6. When the feedback circuit of Fig. 3 is employed, the potential at the junction of the output emitters can be controlled by coupling TR$_4$ directly to TR$_5$ and inserting a preset variable resistor in the emitter circuit of TR$_4$. Representative values are given for the components around TR$_4$ and TR$_5$. Where values are not shown, representative values will be the same as for similar components in Fig. 2

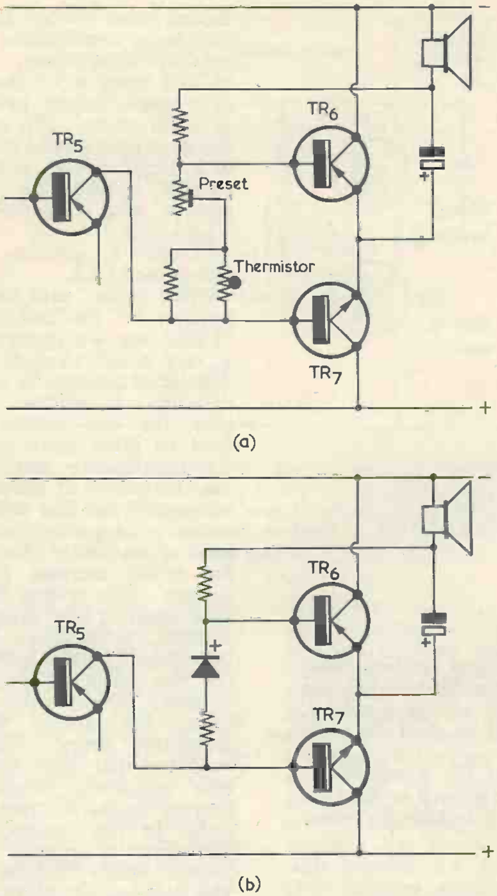

Fig. 7 (a). The "bias resistor" shown in the preceding circuits may consist, in some receivers, of the circuit shown here. The preset resistor could, typically, have a value of 50Ω
(b). Another combination which may be used in the "bias resistor" position is given by a diode in series with a fixed resistor. The value of the latter would, typically, lie in the range of 5 to 10Ω

resistor is merely to allow the correct voltage to be obtained. It will be adjusted so that a specified current flows through the output transistors under no-signal conditions."

"Are there any other ways of tackling this biasing business?"

"An alternative idea," replied Smithy, "consists of using a small diode in series with a resistor. (Fig. 7 (*b*)). The diode is conducting and it offers the same effect as the thermistor in the previous circuit. When ambient temperature rises its resistance decreases, and vice versa. The diode also exhibits increased resistance when battery voltage falls, with the result that sufficient bias is provided to prevent excessive crossover distortion."

"We certainly seem," said Dick, "to have investigated this complementary output circuit pretty thoroughly. I still can't see what its advantages are, though."

"There are two which spring to my mind," said Smithy, "and I won't include the deletion of the output transformer, because many Class B output stages using p.n.p. transistors dispense with that component in any case. On the other hand, there is the very definite advantage given by the omission of the driver transformer which would be essential with two p.n.p. transistors. The second advantage is that the two output transistors don't have to be closely matched."

"Hey?"

"That's right," chuckled Smithy. "As I explained earlier on, they both function as emitter-followers. All they're called upon to do is to develop approximately the same voltage at their emitters as appears on their bases. Provided that both have approximately the same power-handling capabilities, they're able to work quite happily in the circuit without being matched at all."

"Well, I'm dashed," exclaimed Dick. "Do you know, Smithy, I think you've purposely been keeping that little tit-bit of information up your sleeve all the time!"

"I might have done," confessed Smithy. "It's not a bad idea to keep some of the more impressive things until last."

Tracing A Fault

With those words the Serviceman rose from his stool.

"You're not going to leave me now, are you?" asked Dick.

"Of course I am," said Smithy. "I've given you all the gen I can on complementary output stages. What more do you want?"

"A bit of help," replied Dick promptly, "with the set which started off this business!"

Smithy sighed resignedly.

"All right, then," he remarked, "but I'm not going to spend too long on it. I've got the dickens of a lot of work to do myself."

But Dick had already brought the transistor receiver whose circuit had caused him so much difficulty to the front of his bench. Its printed circuit board rested on one edge of the case, and was coupled to the loudspeaker by a pair of thin insulated wires. A further pair of wires connected the board to a 9 volt battery. Dick switched on and selected a station.

"Here we are, Smithy," he announced, adjusting the volume control. "At low volume the output is slightly distorted, and at high volume it's shocking!"

Smithy listened critically.

"It's very probable," he conceded, "that that distortion *is* the result of a fault in the output stage, and so we would be very sensible if we started off by checking things in that part of the set. The more obvious of the two faults is the very heavy distortion at high volume level, and I think we should first look for the cause of this. We will then quite probably cure the distortion at low volume in the process."

The Serviceman stroked his chin thoughtfully.

"One reason for the high-level distortion," he remarked after a moment, "could be that one of the output transistors hasn't got enough supply voltage across it, with the result that it's clipping too early. Measure the voltage between the junction of the output emitters and the positive supply line."

Dutifully, Dick applied the prods of his testmeter.

"It's 6.5 volts," he announced.

"Aha," said Smithy, pleased. "We've struck oil first go. With a 9 volt supply, the potential at the output emitters should, with most sets, be about 5 volts."

"Shouldn't that potential be exactly half the battery voltage?" queried Dick.

"Not normally," explained Smithy. "In practice, it has to be slightly negative of the half-way mark. The reason is that, whilst the collector of the driver transistor can go almost up to the negative supply potential when a high-level positive half-cycle is applied to its base, it cannot approach the positive supply as closely when a high-level *negative* half-cycle is fed to it. Even if the negative half-cycle causes the transistor to become fully bottomed, there's still a small voltage dropped across the emitter bias resistor which prevents the collector from too closely approaching the positive supply potential. This limitation of driver collector excursion in the positive direction is accepted as inevitable, and it means that, to get the best out of the circuit, it is necessary to make the zero signal potential of the output emitters just a little negative of the half-way mark. As I said just now, this potential is usually 5 volts negative of the positive supply line in a 9 volt set."

"In this case," Dick reminded him, "we're getting 6.5 volts, which is definitely too high."

"Indeed it is," agreed Smithy. "And our next task is to find what's causing it. Actually, this is rather a puzzler because, with the d.c. feedback resistor incorporated, the circuit should be virtually self-balancing. I've got a hunch that, instead of looking for sophisticated snags, we should check for a simple component failure."

"Fair enough," said Dick enthusiastically. "In that case the first thing to do is to have a stab at the electrolytics."

"Right," confirmed Smithy. "Try the 200μF which couples the output emitters to the speaker."

Dick switched off the receiver and applied his test prods to the capacitor in question.

"It's reading very low resistance one way," he called out, "and about 100Ω when I reverse the prods."

"We're in luck, then," pronounced Smithy. "I can't think of anything in the circuit which would cause that capacitor to read 100Ω when it's soldered in position, so it's almost certain to be faulty. To make doubly certain, just snip out one lead and check it again."

Dick did as he was bid, and announced that the capacitor still indicated a 100Ω leak when the prods were applied with correct polarity. He next, at Smithy's suggestion, switched on the receiver again, to be rewarded with a reading of 5 volts at the junction of the output transistors.

Job Done

"That's it, then," remarked Smithy, with an air of finality. "Slap in a new 200μF capacitor and the job's done."

"The leak in the old one," said Dick, "must have been pulling those output emitters up towards the negative supply line."

"That's right," confirmed Smithy. "Fortunately, we were able to spot the duffy capacitor with hardly any detective work at all."

"As Sherlock Holmes would have put it," chimed in Dick. "'It's complementary, my dear Watson!'"

MICRO-ELECTRONIC TECHNIQUES AT EMI

Having specialised for many years in system design involving modular concepts, EMI Electronics Ltd. is in an unrivalled position to take advantage of the latest advances in micro-electronics.

In a reversible counter unit, for example, careful consideration has been given to problems of maintenance, accessibility and air cooling. Yet well over 10,000 solid-state networks can be employed per cubic foot.

The unit consists of 100 networks, occupying about 15 cubic inches. Using conventional techniques, some 2,500 components would be required to produce the same function, occupying at least ten times the volume.

Specialised welding and soldering techniques are used throughout, with mini-wrapped joints at the replacement interfaces. Compared with conventional components, it has been shown that these techniques give an enormous improvement in reliability.

Other examples include thin film amplifiers, featuring a 45 Mc/s i.f. amplifier with coupled tuned circuits deposited on the substrates, and a wide band amplifier with 200 Mc/s bandwidth and 10dB gain per stage.

A 500 Mc/s counter and associated logic have been developed, capable of range timing to within 2ft. The system employs novel circuits using tunnel diodes and strip lines.

Catalogue Received . . .

We have received from Home Radio (Mitcham) Ltd., 187 London Road, Mitcham, Surrey, a copy of their latest catalogue. This is quite the best publication of its type that we have seen, its 200 pages being clearly laid out and liberally illustrated with both photographs and drawings of the components and units currently being offered to the home constructor.

In addition to the countless items previously included in this catalogue, new additions include interference suppression components, Grundig lightweight relays, metal oxide high stability resistors, box and open ended spanners, new range of Repanco transistor transformers, new Armstrong tuner amplifiers, radio control model equipment and Mullard high value capacitors, etc., etc.

The price of the catalogue is 5/– but this may be completely recovered by enclosing the coupons, of which there are five each valued at 1/–, when remitting cash with order, instructions for this being on page 1.

This is a catalogue which we feel should be in every enthusiasts possession.

THE ARCOTRON

By J. B. DANCE, M.Sc.

An arcotron is a cold cathode power switching tube filled with an inert gas. It has somewhat similar characteristics to a thyratron, but requires no heater supply. Arcotrons can be used for the control of power fed to incandescent lamps, electro-magnets, magnetic clutches, solenoid valves and heating elements, etc. They can also be used to control ignitrons or small spot welders.

Arcotrons are manufactured by the Cerberus Company of Switzerland, whose range includes at least seven types. However, this discussion will be mainly confined to the BT31 arcotron, since all of the others are now maintenance types. The BT31 is the smallest of the arcotrons, all of which have a coding commencing with the letters BT. Some of the tubes are quite large and can pass peak currents of 100 amps.

An arcotron tube contains a cathode, an auxiliary anode, a control grid and a main anode. The pressure of the gas inside the envelope is several orders of magnitude higher than that in a thyratron and this eliminates the problems of removing gases liberated from internal surfaces.

Arcotrons do not require any heater and therefore there is no warming up time. (The cathodes of some thyratrons are permanently damaged if the anode voltage is applied before the cathode is fully warmed up.) In addition the elimination of the heater power—which can be considerable in the case of a thyratron—permits the design of arcotrons which are smaller than thyratrons of the same power rating.

The electrode structure of an arcotron is shown in Fig. 1. The auxiliary anode H and the control grid G are perforated discs arranged perpendicularly to the axis of the tube. An auxiliary arc discharge is maintained between the cathode and the auxiliary anode, the potential between these electrodes being about 25 volts. Electrons from the auxiliary discharge can penetrate through the auxiliary anode into the space between this electrode and the grid. Viewed from the grid they appear, therefore, to form a virtual cathode. If the grid is negative, the electrons cannot penetrate into the space between the grid and the anode gap. As the grid potential increases, a point will be reached at which the anode potential attracts electrons through the holes in the grid. This occurs when the grid is still negative with respect to the auxiliary anode. The electrons produce ionisation in the main anode-to-cathode gap, and a discharge occurs.

Characteristics

The critical grid voltage at which breakdown takes place depends on the anode voltage, as shown in the characteristic of Fig. 2. When the operating point is in the lower left-hand side of the diagram, the tube will be cut off, whilst in the upper right-hand section it will be conducting. If the operating region is in the shaded area, some BT31 tubes will conduct whilst others will remain cut off.

Further details of the BT31 and other arcotrons may be obtained from Cerberus A.G., Werk für

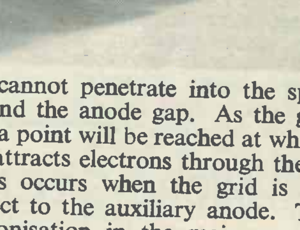

Fig. 1. Electrode configuration of an Arcotron

Electronentechnik, Männedorf, Switzerland. Arcotrons and other Cerberus tubes are available in England from Walmore Electronics, of 11-15 Betterton Street, Drury Lane, London, W.C.2.

TABLE
PRINCIPAL CHARACTERISTICS AND BASE CONNECTIONS FOR THE BT31

Min. anode breakdown voltage	600 volts
Max. auxiliary anode breakdown voltage	250 volts
Arc voltage, main anode to cathode	20 volts
Permanent cathode current	300mA
Max. peak cathode current	10A
Grid voltage, max.	−100 volts
Inverse anode voltage, max.	600 volts
Auxiliary anode to cathode arc voltage	25 volts

BASE CONNECTIONS (B9A base)

1	2	3	4	5	6	7	8	9
G	A	H	K	K	G	A	H	K

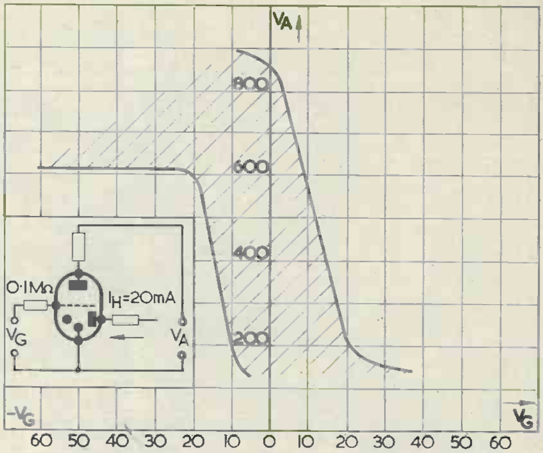

Fig. 2. Control characteristics of the BT31

FM TUNER UNIT USING A *Pulse Counting Detector*

By K. H. PARKES, G3EHM

THE MAJORITY OF TUNER UNITS FOR F.M. RECEPTION utilise a "tuning heart", this comprising an r.f. stage and a frequency changer (usually a twin triode) to amplify and change the signal to an i.f. of 10.7 Mc/s. This is followed by one or two 10.7 Mc/s i.f. amplifiers and a ratio detector employing two diodes.

From a constructor's point of view this line-up possesses several disadvantages. These are:

(1) The need for expensive test equipment to align the ratio detector and the i.f. stages.

(2) The possibility of regeneration in the i.f. stages, producing an asymmetrical i.f. response curve. This can give rise to critical tuning and also distortion, and is not readily apparent without a test involving visual alignment.

By using a pulse counting detector together with a low i.f., these disadvantages do not arise. In the circuit to be described, only one 10.7 Mc/s i.f. transformer is used and its adjustment is simple. Also the distortion, using a pulse counting detector, is 0.1%, whereas an unbalanced ratio detector can have up to 4% distortion.

No originality is claimed for the circuits used, since the i.f. amplifier and detector circuit are due to M. G. Scroggie, and were described in *Wireless World* in 1956.[1]

Design Considerations

The pulse counting detector must be preceded by a low i.f.—of the order of 200 kc/s. In order to obtain this i.f. two methods can be employed.

(*a*) An oscillator can be used which differs in frequency from the signal frequency by 200 kc/s. This would entail the use of a crystal controlled oscillator, since the percentage difference at approximately 90 Mc/s would render a self-excited oscillator

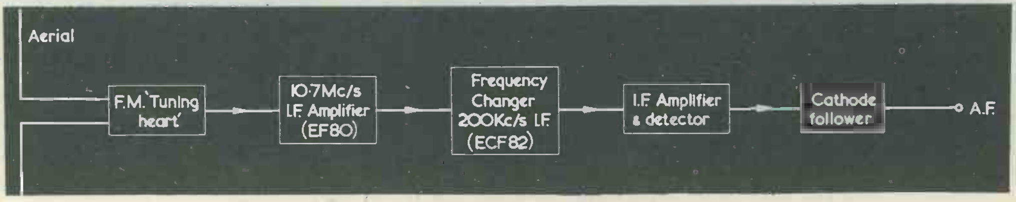

Fig. 1. Block diagram showing the various stages of the tuner

---

[1] M. G. Scroggie, "Low Distortion FM Discriminator", *Wireless World*, April 1956; and "Unconventional FM Receiver", *Wireless World*, June 1956.

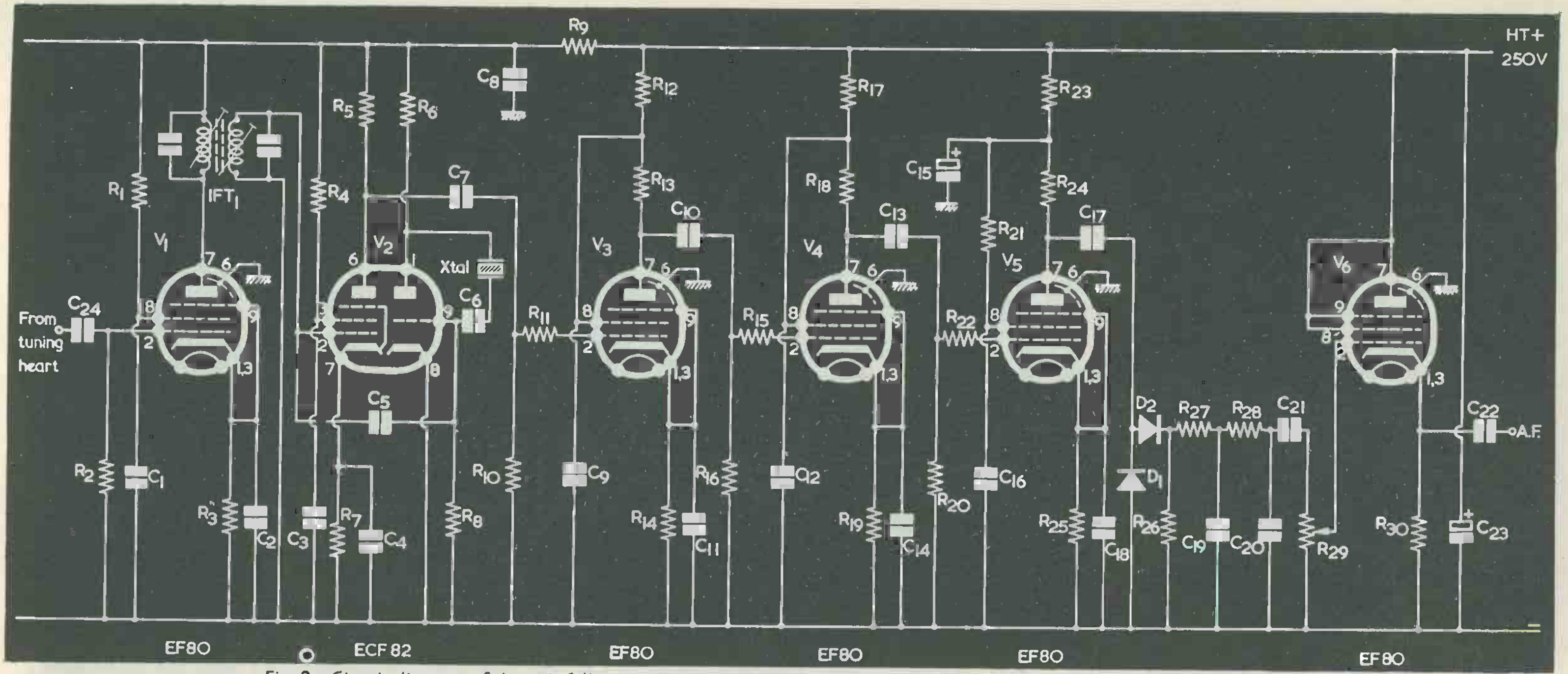

Fig. 2. *Circuit diagram of the unit following the "tuning heart". The latter offers an input to the grid of V_1 at 10.7 Mc/s*

Components List

Resistors

(All fixed resistors 10% unless otherwise stated)

R_1	10kΩ ½ watt
R_2	100kΩ ¼ watt 20%
R_3	330Ω ¼ watt
R_4	15kΩ ½ watt
R_5	10kΩ ½ watt
R_6	22kΩ ½ watt
R_7	330Ω ¼ watt
R_8	47kΩ ¼ watt 20%
R_9	470Ω ½ watt 20%
R_{10}	100kΩ ¼ watt
R_{11}	4.7kΩ ¼ watt
R_{12}	10kΩ ½ watt 20%
R_{13}	18kΩ ½ watt
R_{14}	470Ω ¼ watt
R_{15}	4.7kΩ ¼ watt
R_{16}	100kΩ ¼ watt
R_{17}	10kΩ ½ watt 20%
R_{18}	18kΩ ½ watt
R_{19}	470Ω ¼ watt
R_{20}	100kΩ ¼ watt
R_{21}	10kΩ ½ watt
R_{22}	4.7kΩ ¼ watt
R_{23}	22kΩ 1 watt 20%
R_{24}	4.7kΩ ¼ watt
R_{25}	270Ω ¼ watt
R_{26}	4.7kΩ ¼ watt
$R_{27, 28}$	47kΩ ¼ watt
R_{29}	1MΩ potentiometer, log track
R_{30}	100kΩ ½ watt

Capacitors

(All capacitors 350V wkg. See text concerning 0.1μF capacitors)

$C_{1, 2, 3, 4}$	0.1μF
C_5	2pF ceramic
C_6	100pF silver-mica
C_7	250pF silver-mica
$C_{8, 9}$	0.1μF
C_{10}	250pF silver-mica
$C_{11, 12}$	0.1μF
C_{13}	250pF silver-mica
C_{14}	0.1μF
C_{15}	2μF electrolytic
C_{16}	0.1μF
C_{17}	50pF silver-mica
C_{18}	0.1μF

C_{19}	1,000pF ceramic
C_{20}	100pF silver-mica
$C_{21, 22}$	0.01µF paper
C_{23}	8µF electrolytic
C_{24}	100pF silver-mica
Valves	
V_1	EF80
V_2	ECF82
$V_{3, 4, 5, 6}$	EF80
Diodes	
$D_{1, 2}$	GD3
Transformer	
IFT_1	10.7 Mc/s i.f. transformer
Crystal	
10.5 Mc/s crystal (see text)	
Ancillary	
F.M. "tuning heart" (see text)	

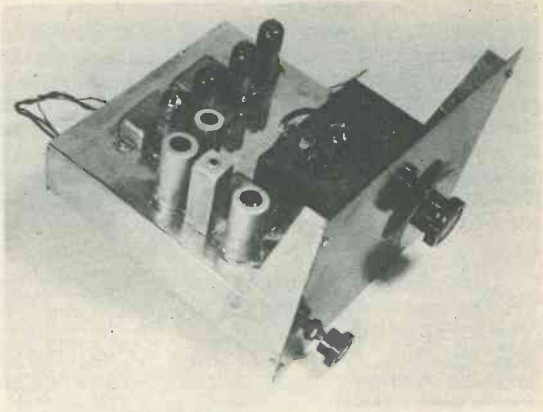

The prototype unit constructed by the author

impracticable.

(*b*) The double superhet principle may be employed, the first i.f. being at 10.7 Mc/s and the second i.f. at 200 kc/s.

The circuit to be described employs a simple f.m. tuning heart, using a double triode as r.f. amplifier and frequency changer and having an output at 10.7 Mc/s. These units can be obtained at low cost.[2] The double superhet method is used, the second oscillator being crystal controlled at 10.5 Mc/s.

Circuit Description

With reference to the block diagram of Fig. 1 and the circuit diagram of Fig. 2, the output from the tuning heart is fed into a 10.7 Mc/s i.f. amplifier using an EF80. In regions of high field strength, this stage could be omitted. The amplified signal is next fed to an ECF82 triode-pentode frequency changer. Since the resulting i.f. is only 200 kc/s, a resistive anode load may be employed. The oscillator is the triode section of the ECF82, using a 10.5 Mc/s crystal.

Experiments have shown that this part of the circuit is not critical. A 10 Mc/s crystal has been tried and proved satisfactory, providing an adjustment is made to the 10.7 Mc/s i.f. transformer to bring it down to 10.2 Mc/s. A slight adjustment to the i.f. transformer in the tuning heart will also bring up the sensitivity when the i.f. is other than 10.7 Mc/s.

The output from the mixer anode is fed into the grid of the first 200 kc/s i.f. amplifier, V_3. Due to the low frequency, this stage and those which follow are untuned. After further amplification by V_4, the signal is passed to V_5, which acts as a limiter. This minimises interference by amplitude-modulated signals and also turns the signal pulses into square waves of constant amplitude. The constant amplitude output is then fed into the pulse counting detector given by diodes D_1 and D_2. Since square waves of equal amplitude have been produced, the mean value of the pulse chain will vary with its frequency variation.[3] The rectified voltage appears across R_{26}. Components R_{27}, C_{19}, R_{28} and C_{20} provide the necessary de-emphasis and removal of the unwanted i.f. component. C_{21} provides a.f. coupling to the cathode follower V_6. The latter enables a low impedance output to be obtained and is suitable for feeding an amplifier or tape recorder.

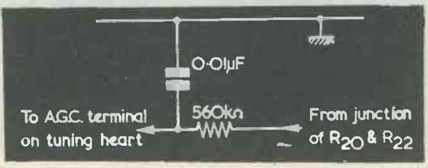

Fig. 3. Adding an a.g.c. circuit

Constructional Details

The chassis for the prototype measured 8 x 8 x 2in and was made from tin sheet in order to speed construction. Valveholders, coaxial sockets and tagstrip are soldered direct to the chassis. The 0.1µF by-pass capacitors used were ex-W.D. "micamould

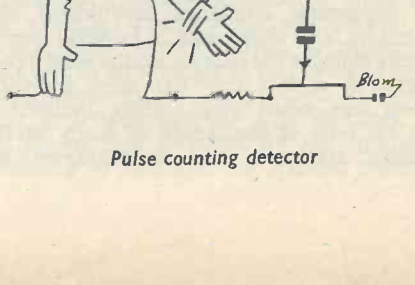

Pulse counting detector

---

[2] A "tuning heart" offering an output at 10.7 Mc/s is available from Daystrom Ltd. as Model FMT-4U. Manufacturers' surplus units are also available from advertisers from time to time.—EDITOR.

[3] This occurs when all pulses have the same size.—EDITOR.

[4] If this type of capacitor is not available, it should be adequate to use 10,000pF ceramic components for C_1 to C_4 and for C_8. The remaining 0.1µF capacitors could be paper types.—EDITOR.

bathtub" types, these also being soldered direct to the chassis.[4] The crystal oscillator was checked simply by listening on the crystal frequency with a shortwave receiver. The i.f. amplifier stages were checked by connecting an aerial to the junction of R_{11} and R_{10}. Since these stages are untuned, a number of stations, with the Light Programme on 200 kc/s predominating, were heard.

Final Adjustments

After checking the circuit and applying h.t. and l.t., the output was connected to an audio amplifier. The aerial was connected, an f.m. station tuned in, and the cores of the 10.7 Mc/s i.f. transformer adjusted to give maximum output. No other adjustments were needed.

Consumption

The unit requires 250V at 50mA and 6.3V at 2A.

Automatic Gain Control

If a lead exists on the tuning heart for a.g.c. purposes, this can be utilised by adding the components shown in Fig. 3.

Switched Tuner Unit

The method of detection described here can be used in a switched tuner unit employing a triple crystal for Home, Light and Third Programmes, and giving an i.f. of 10.7 Mc/s. The tuning heart would be replaced by an r.f. stage and frequency changer incorporating the triple crystal unit.

Final Comments

This unit was evolved because the writer lives in an area of low field strength and was dissatisfied with the performance of some tuner units using the ratio detector. Its excellent noise limiting qualities and lack of distortion make it an ideal adjunct to other hi-fi equipment.

Experiences of an Early Amateur

The Fourth of a Five-part Series

by C. H. Gardner

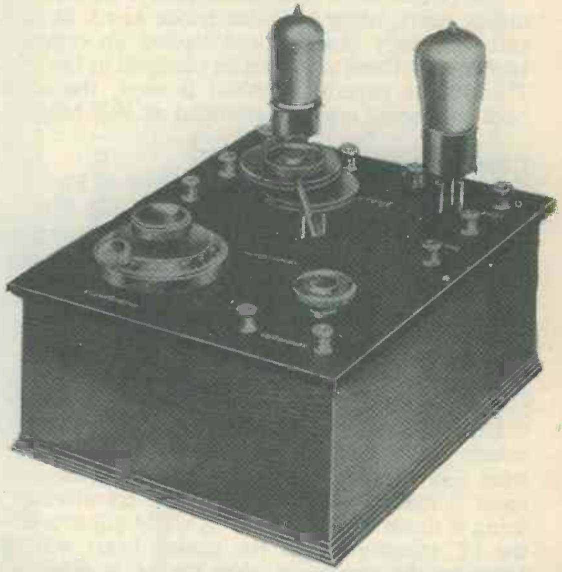

THERE HAS NEVER BEEN A VERY PRONOUNCED dividing line between the amateur and the professional in radio. Many professional technicians are amateur transmitters and there are many amateurs who have not been above earning a bit of pocket money by undertaking a spot of construction work for an acquaintance. In the early days of radio the line was even less sharply defined. There was not a great deal of commercially built equipment available, technicians were few in number, and there was a growing demand for receivers suitable for picking up the early broadcasts. It was also a fact that the more knowledgeable amateur was, often quite rightly, inclined to look down his nose at the design of many of the early broadcast receivers, and to construct his own designs for the use of his friends and relatives. Some of these amateurs developed into small-scale manufacturers and a few survived finally to become nationally known set makers. It would almost be safe to say that the industry, both manufacturing and retailing, was founded by the radio amateur.

Unfortunately, the man with the technical knowledge was not always the man with business experience or with the know-how for manufacturing on a large scale. Many also lacked that basic technical knowledge which could allow them to keep abreast of the rapid developments taking place in design. Consequently, many fell by the wayside and this situation was not helped by a strong anti-broadcasting campaign in the middle twenties.

Receivers of Specialised Design

I feel, therefore, that no apology is necessary for including in these accounts of the early days an incident which was the direct result of being concerned with the manufacture, on a small scale, of a few receivers of somewhat specialised design. One of these was borrowed by a concern manufacturing loudspeakers and put on show at the British Empire Exhibition in 1924. This receiver caught the eye of the directors of a Spanish concern who specialised in the distribution of British engineering products, and resulted in my being invited to take three such receivers to Spain to introduce broadcasting into that country. No Spanish broadcast transmitters were in service or even under consideration at that time, but our Spanish friends felt that if it were possible to demonstrate the reception of British broadcasting, sufficient interest might be engendered to allow of the successful launching of a Spanish broadcasting company.

In order to bring this about they felt that it was essential for the demonstration to take place in the right place at the right time and to have such an element of surprise as to ensure national press coverage. So far as I was concerned I had no doubt of the ability of the receivers to provide good reception and the idea of an "all expenses paid" holiday in Spain had a considerable attraction. This was enhanced when I was told that the demonstration would take place, in August, 1924, at the height of the season in the fashionable seaside resort of San Sebastian when the nobility of Spain, often including the Spanish Royal Family, would be present.

In those days there was a close resemblance between San Sebastian and Monte Carlo and the centre of interest was the Grand Kursal with its gaming rooms and other attractions. One of the features of this place was the eight o'clock "parade" at which "everyone who was anyone" paraded slowly round the central hall to the accompaniment of music from one of Spain's most famous light orchestras. My Spanish friends felt that if it were possible for the proceedings to be opened by a surprise item including the eight o'clock chimes of Big Ben followed by a short musical transmission before the Spanish Orchestra took over, they would succeed in their aims. The directors of the Kursal not only agreed to the idea with considerable enthusiasm but also offered to provide all possible facilities, subject to the provisos that none of the equipment must be visible, and that reception must be certain and perfect.

Air travel to Spain was non-existent at that time and the equipment had perforce to be packed and shipped for transport by rail and sea. Included were three receivers and twelve horn-type loudspeakers, together with a case of ancillary equipment such as aerial wire, batteries, headphones, switchgear and the like. The fact that my own journey took less than 48 hours and that the equipment took the best part of a week to get to its destination allowed an opportunity for a general survey of the conditions under which we would have to work. These conditions gave rise to some anxiety and a considerable desire to carry out the preliminary tests.

The Grand Hall of the Kursal had, most fortunately, a flat roof round its edges. In the centre was a dome-like structure which contained large numbers of stained glass panes. After considerable negotiation the directors agreed to the removal of a few of these panes of glass to enable the horns of the loudspeakers to be inserted. The height and general decorations of the hall would make these speakers more or less invisible. The receiver itself would have to be mounted on the roof and one extra pane of glass would be removed to enable us to keep a watchful eye on the proceedings below.

"Speech" and "Music"

The receiver which I intended to use consisted of two tuned anode r.f. stages, a detector, two a.f. stages and a switchable stage of "power" amplification. The a.f. amplifier was fitted with a "tone control" switch labelled "Speech" and "Music". The "Speech" position cut out the lower frequencies to provide "clarity" and the "Music" position cut off the higher frequencies in order to provide a "mellow" tone. These effects were obtained by shunting the secondary windings of the intervalve transformers with suitable resistance-capacitance networks, a scheme for which I held a provisional patent at that time (but for which no one ever troubled to pay me any royalties).

The reader may be surprised to learn that, although only simple triode valves were available—as the screen-grid valve and the pentode had not yet come into existence—no doubts were present as to the ability of the receiver to provide loudspeaker reception from a broadcast transmitter at such a distance. The necessary stability was obtained by using separate h.t. supplies for the r.f. and a.f. parts of the receiver, by careful positioning of the components, and by elaborate wiring arrangements whereby stiff and heavy gauge connecting wires crossed each other at right angles. No form of screening was employed and the whole receiver consequently took up an immense amount of space. This is shown in the accompanying picture taken on the roof of the Grand Kursal. It should also be noted that each valve had a variable resistor in its filament circuit to allow for the change in the supply voltage from the accumulator as it ran from full charge.

In due course the equipment arrived and preliminary trials showed that there was no difficulty in obtaining good reception from the B.B.C. A report to that effect having been made to the directors of the Kursal it was agreed that the demonstration should take place at eight o'clock the next evening. The next day was spent in having the stained glass panes removed, in wiring up the speakers and in arranging a switch to allow monitoring headphones to be changed over to the loudspeakers in a split second. The directors of the Grand Kursal then arranged for the conductor of the orchestra to withhold his opening music for a few minutes so that the eight o'clock chimes of Big Ben and a few bars of broadcast music could be heard before his programme commenced. I was told that this took some major persuasion on the part of the directors. Whether the conductor saw in this some future intrusion into his province or not I do not know. He need not have feared!

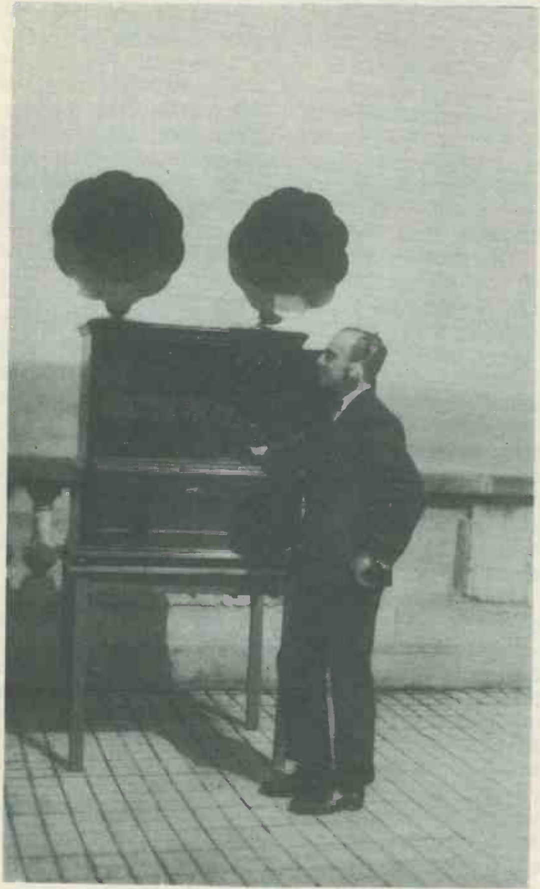

The receiver employed for the first, and somewhat ill-fated, demonstration of broadcast reception ever to be held in Spain

At ten minutes to eight we switched on the headphones and much mutual congratulations took place, as reception was almost perfect. At five minutes to eight the directors took their place in the hall, ready to make an announcement of the epoch-making event after it had occurred. Through our "peep hole" we could see a most satisfactory assembly of paraders.

In the B.B.C. studio a gentleman was holding forth on the wonders of ants and bees. This came over "loud and clear" and at one minute to eight my hand went up to the change-over switch. At eight o'clock my hand was still on the switch and the gentleman still discoursed on the wonders of ants and bees. At one minute past eight the directors were casting upwards glances at our "peep hole" and the orchestra conductor was showing some visible signs of anxiety. At two minutes past eight the B.B.C. announcer apologised for the non-striking of Big Ben owing to the ants and bees having overrun their time. And at five minutes past eight the directors arrived on the Kursal roof.

I was unable to translate their remarks but their gesticulations, their shouts and their dances gave me an impression that they were not pleased. It was in vain for the Spanish engineers to try to explain what had happened. They could not shout loud enough, but I gathered later that the directors had told them that the whole thing was a fraud, that the sooner I personally returned to England the safer I should be and they had not the slightest interest or intention of letting us make a further attempt the next evening. Perhaps if the ants and bees had not been so busy, broadcasting might have arrived in Spain a little earlier than it did.

Early Triode Valves

The earlier mention that the equipment used during this incident employed only triode valves, as pentode and screen-grid types had not been produced, recalls to mind a few matters concerned with those early triode valves. In the very earliest days it was reputed that, owing to the wide spread of characteristics, type labelling was carried out after testing. Thus, r.f. valves, detectors, and a.f. valves had their identifying coloured rings or caps painted on their bulbs after leaving the production line. They were then tested and sorted, whereupon the colours were applied to indicate the application for which they might prove to be most suitable.

With the advance of manufacturing techniques, characteristic spread came much more under control, although careful selection could still add materially to the performance of a multi-valve receiver. A choice of valves with 2, 4, or 6 volt filaments was available and, at about the time of the period under review, the range was increased by the development and introduction of the thoriated tungsten filament. This resulted in an appreciable reduction in the power consumed by a multi-valve receiver. Nevertheless, battery consumption was still a major item in running costs, and the amount of space occupied by the necessary accumulator and h.t. battery required an extensive "battery compartment" in receivers for home use. Whilst these items, together with their connecting wires, were not out of place in the amateur's den they were apt to excite comment from the ladies if they appeared on the top of the grand piano.

A division of interest was also beginning to appear amongst "listeners" or "listeners-in", as people with receivers were referred to at the time. The status of the "listener-in" was apt to be judged by the number and distance of the stations that he could receive, rather than by the quality of the reception. This was on rather a different plane to the experimental work which was being carried out by the real enthusiast in long distance reception, this being work which did, in fact, add materially to the development of long distance communications. But the variety and excellence of B.B.C. broadcasts were providing an ever-growing interest in quality of reception. This was all to the good for the future of the industry, since there was a hard core of musical talent who refused to broadcast after hearing how the efforts of others were reproduced.

During this period it was frequently suggested, not without a grain of truth, that good quality reception could only be obtained by using a crystal set and a pair of headphones. More than ten years later, this opinion was still quite strongly held by numbers of people. The frequency limitations of the early loudspeakers and invervalve transformers certainly resulted in a complete loss of bass and treble, but a more serious cause of objectionable distortion was the overloading of the a.f. valves as the batteries ran down.

Batteries were still in use for the h.t. supply despite the fact that a mains supply was available in most houses. In fact, the earliest substitute for h.t. batteries were rotary converters. These were known as M.L. converters and were driven from the 6 volt accumulator used to supply the filament current. An output of 120 volts d.c. was available, and the metal box housing the converter also contained a smoothing circuit.

Some years later a "battery eliminator" was put on the market. This was for use with a.c. mains only, and it included a mains transformer and smoothing circuits. An attempt to reduce the number of journeys necessary to take the accumulator to be recharged was made by marketing a "trickle charger" which could be left more or less permanently connected to the mains supply and the accumulator. Both these pieces of equipment were rather costly and they required much more space than was usually available in the cabinet of the receiver. If fitted externally they were not inclined to improve the appearance of the room in which the receiver was located. It was not until 1928 that the first indirectly-heated "mains" valves appeared and some two further years elapsed before these were really established and in general use for broadcast reception. "Getting rid of the hum" then became a major exercise for the radio constructor; but we are leaping ahead a little in writing about such advanced matters. *(to be concluded)*

Marconi Colour Camera for TSR-2 Flight Simulator

The pilots who will fly Britain's newest supersonic fighter, the TSR-2, will learn to handle the aircraft, without leaving the ground, with the aid of colour television equipment. The Marconi Company has received a contract for the colour camera intended to provide the "view from the cockpit" in the TSR-2 flight simulator which has been ordered by the Ministry of Aviation from General Precision Systems Ltd.

The television camera in this simulator will be mounted above a model of the countryside surrounding a typical airfield. The model is built on a continuous moving belt, which can be driven at a speed corresponding to that of the aircraft. At the same time, the camera itself is linked to the aircraft controls and will take up any "flying" attitude in relation to the ground model. Full colour pictures from this camera will therefore correspond with the view that a pilot would have in an actual flying situation on a landing approach.

Flight simulators, which have all the aircraft control facilities built into a full scale model of the cockpit, are an invaluable aid to pilot training, since many hours of simulated flying time can be accumulated by a pilot irrespective of weather conditions and at a fraction of the cost of actual aircraft experience. This simulated flying will then considerably reduce the amount of actual flying necessary to complete the training.

The Marconi camera intended for this equipment will be a slightly modified three-tube camera, Type V3310.

JASON MOVE TO LARGER PREMISES

Jason Electronic Designs Ltd., manufacturers of the Jason range of equipment and home-construction kits, and their associate companies Radio Traders Ltd. and Lorlin Electronics Co. Ltd. (manufacturers of the Lorlin SB26 tape deck) are moving from their present premises in Wardour Street, W.1., to a new and larger West End showroom.

In their new premises at Tudor Place, London, W.1. (MUS 4666/8) members of the trade will be welcomed at the trade counter, and equipment will be on display for inspection by the public in a special demonstration room.

The new showroom is only 50 yards from Tottenham Court Road Underground station.

Cover Feature

THE "CONSTRUCTORS" PORTABLE SIX

By **F. G. RAYER**, Assoc.Brit.I.R.E.

Employing alloy-diffused transistors in the mixer and i.f. amplifier stages, this receiver offers medium and long wave reception with more than ample output into a 7 x 4in elliptical speaker. Special features are the use of double-tuned i.f. transformers and a wide-range automatic gain control circuit incorporating a damping diode

THIS SIX-TRANSISTOR PORTABLE TUNES MEDIUM AND long waves and uses alloy-diffused transistors with double-tuned i.f. transformers in the i.f. amplifier. There is a damping diode in addition to the a.g.c. circuit, and negative feedback is provided over the a.f. stages. A 7.5 or 9 volt battery can be used and excellent reproduction is obtained from the 7 x 4in speaker. Provision is made for an external aerial, if wanted, so that the set may be used in a car. A car-receiver licence is not required in this instance since the receiver is not permanently fitted.

As the receiver is not of midget design, it is particularly suitable for beginners, and the colour codes are given for all the resistors. The set is of reliable and efficient design, with very good sensitivity and volume.

The Circuit

The circuit is shown in Fig. 1. The first AF117 is the mixer, feeding the double-tuned transformer IFT$_1$. With strong signals, diode D$_1$ conducts, damping this circuit and so considerably extending the automatic gain control performance. The second and third transistors are also AF117's. These transistors are screened and require no neutralising. Transformer IFT$_3$ has a diode incorporated so that an a.f. output is obtained from pin 5. The diode also gives a positive voltage proportional to signal strength, this being applied to the first i.f. transistor through R$_8$. This circuit provides the basic automatic gain control, reducing gain with strong signals. The a.g.c. action is better than that of many popular receivers.

The a.f. output from the diode is passed to the a.f. gain control VR$_1$, which incorporates the on-off switch. The driver transistor is an OC81D and the output stage a matched pair of OC81's. Negative feedback is provided via R$_{18}$, this improving the characteristics of the amplifier. The output transistors are held by clips bolted to small metal plates, these acting as heat sinks.

General Construction

All resistors, capacitors, and other parts are placed on one side of a Paxolin panel, with their leads or pins projecting through small holes, as shown in Fig. 2. If care is taken to insert each part in its correct position, no trouble should arise when wiring up. Resistor and capacitor leads should not be bent sharply at right angles or immediately by the component body, as this may fracture the wires. Instead, they are bent as in Fig. 2.

All resistors may be inserted either way round, and the colour coding should be checked against the resistor list. This will avoid mistakes in values. Small, non-electrolytic capacitors may also be inserted either way round. The electrolytic capacitors, on the other hand, have positive and negative ends, and must be placed with these in the positions shown in the wiring plans.

Soldering is best carried out with a 25 watt or similar small iron having a bit of about $\frac{3}{16}$in diameter. Radio grade cored solder should be used. If the iron has to be tinned, clean it and apply cored solder. Afterwards, the solder is always applied to the joint, not to the iron. Items to be soldered must be clean and bright. Hold the solder at the joint to be made, and apply the iron to joint and solder.

Remove the iron as soon as the joint is made.

Capacitors have the values marked on them, and are best positioned so that the value remains visible. Wire ends are spread out, as for the resistor in Fig. 2, so that components do not come away when the Paxolin panel is turned over. It is easiest to insert several components at a time, check they are correct, then turn the panel over and solder them all.

Tinned copper wire (24 s.w.g.) can be used throughout for connecting purposes. The wire is covered with 1mm sleeving. It is helpful to have three colours of sleeving, such as red for the "earth" (battery positive) line, black for the negative line, and yellow for other connections. This simplifies work and checking, and reduces the chances of mistakes.

Paxolin Panel

The Paxolin panel is $10\frac{1}{4}$ x $7\frac{1}{4}$in and $\frac{1}{16}$in thick. VR$_1$, the wavechange switch S$_1$, and the tuning drive spindle bush require $\frac{3}{8}$in diameter holes. The large cut-out is $4\frac{1}{4}$ x $3\frac{1}{4}$in to clear the speaker unit, which is fixed to the cabinet. This large hole can be cut with a fretsaw, or by making two $3\frac{1}{4}$in, diameter holes with a tank or washer cutter. It is also possible to drill a line of small holes, remove the centre piece, and clean up with a file or rasp.

A $\frac{1}{16}$in drill is suitable for all wire ends, with an $\frac{1}{8}$in drill for 6BA bolts, and for coil and i.f. transformer pins.

Fig. 3 shows the positions of the principal holes required in the Paxolin panel. An actual size paper template giving all the holes required is available from Osmor Radio Products Ltd., and this is included in the components list.

Fig. 4 shows where the parts are fitted. It is best to leave the transistors and ferrite aerial until most of the other items are in place and have been soldered.

Coil and I.F. Transformers

The oscillator coil has 6 pins and is inserted with the green spot downwards. See Fig. 4. Spread the can tags slightly to hold it in position.

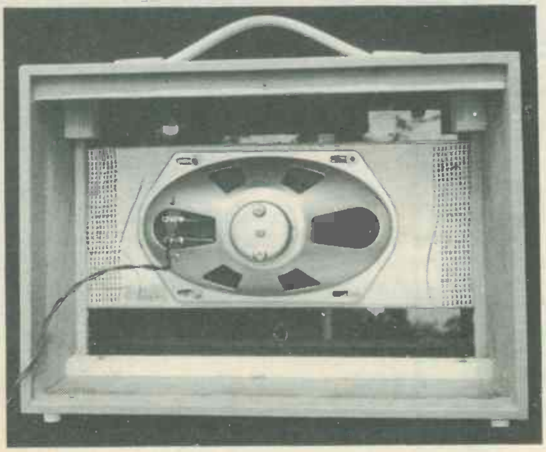

Rear view of the speaker mounted in the case

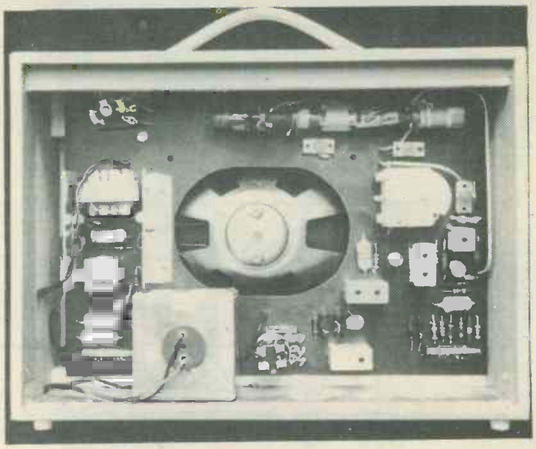

The completed receiver mounted within the case

IFT$_1$ has a brown mark, facing downwards. Only pins 1, 3, 5 and 6 are used. IFT$_2$ has a red mark, to the right in Fig. 4. Pins 1, 2, 5 and 6 are used. IFT$_3$ has an orange mark, to the right in Fig. 4, pins 1, 2, 4 and 5 being used.

When wiring up, take the earth circuit lead to a tag of each screening can. Both tags of the oscillator coil are earthed for convenience in wiring.

Volume Control

The volume control occupies the low central hole. Leads X, Y and Z (Fig. 4) pass through the panel, to be connected as in Fig. 5. About 9in of thin red flex is taken from one on-off switch tag, for the positive battery connection.

A.F. Transformers

Transformer T$_1$ is held by its wire ends. A touch of cement may be placed under it in advance. It is placed so that its coloured leads emerge in the positions shown in Fig. 5. Brown and blue are primary. Green and yellow are the outside secondary leads, the centre-tap being marked red.

The output transformer T$_2$ has three leads on

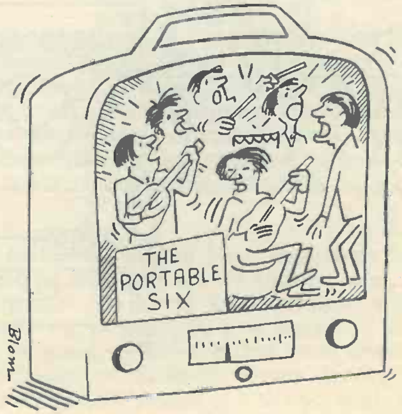

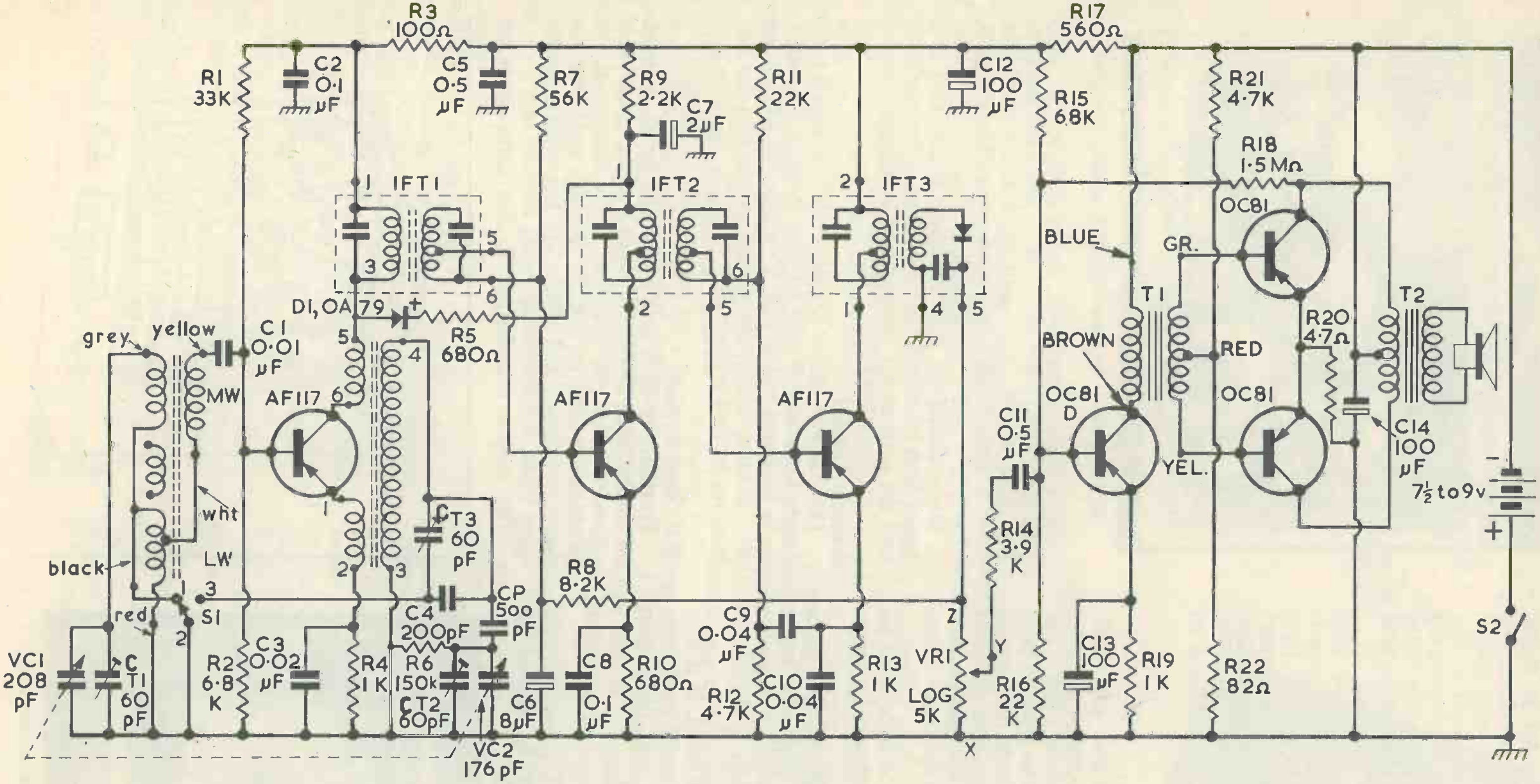

Fig. 1. The complete circuit of the receiver. S_2 is ganged with VR_1

Components List

Resistors

(All fixed resistors are ¼ watt 10% unless otherwise stated)

R_1	33kΩ orange-orange-orange-silver
R_2	6.8kΩ blue-grey-red-silver
R_3	100Ω brown-black-brown-silver
R_4	1kΩ brown-black-red-silver
R_5	680Ω blue-grey-brown-silver
R_6	150kΩ brown-green-yellow-silver
R_7	56kΩ green-blue-orange-silver
R_8	8.2kΩ grey-red-red-silver
R_9	2.2kΩ red-red-red-silver
R_{10}	680Ω blue-grey-brown-silver
R_{11}	22kΩ red-red-orange-silver
R_{12}	4.7kΩ yellow-violet-red-silver
R_{13}	1kΩ brown-black-red-silver
R_{14}	3.9kΩ orange-white-red-silver
R_{15}	68kΩ blue-grey-orange-silver
R_{16}	22kΩ red-red-orange-silver
R_{17}	560Ω green-blue-brown-silver
R_{18}	1.5MΩ brown-green-green-silver
R_{19}	1kΩ brown-black-red-silver
R_{20}	4.7Ω yellow-violet-gold-silver
R_{21}	4.7kΩ 5% yellow-violet-red-gold
R_{22}	82Ω 5% grey-red-black-gold
VR_1	5kΩ log potentiometer with switch (S_2)

Capacitors

C_1	0.01μF 150V wkg.
C_2	0.1μF 150V wkg.

C_3	0.02µF 150V wkg.
C_4	200pF silver-mica or ceramic 5%
C_5	0.5µF 150V wkg.
C_6	8µF electrolytic 6V wkg.
C_7	2µF electrolytic 6V wkg.
C_8	0.1µF 150V wkg.
$C_{9, 10}$	0.04µF 150V wkg.
C_{11}	0.5µF 150V wkg.
$C_{12, 13, 14}$	100µF electrolytic 12V wkg.
CP	500pF (padder) silver-mica or ceramic 5%
VC_1/VC_2	208/176pF 2-gang capacitor type 00 with screen and without trimmers (Jackson Bros.)
$CT_{1, 2, 3}$	60pF trimmers

Transistors

$TR_{1, 2, 3}$	AF117
TR_4	OC81D
$TR_{5, 6}$	OC81 (matched pair)

Diode

D_1 OA79

Inductors

(All inductors are available from Osmor Radio Products Ltd. Specify "Constructors" Portable Six Receiver when ordering.)

- Oscillator coil for AF117 transistor
- Set of 3 double-tuned i.f. transformers for AF117 transistors
- Dual-wave ferrite rod aerial type QFR1, with mount
- External aerial coupling coil type QXL1 (optional)
- T_1 Driver transformer type QXD1
- T_2 Non-miniature output transformer type QXO2

Speaker

7 x 4in 3Ω speaker

Switches

S_1 Single pole 2-way miniature rotary switch (see Fig. 4)
S_2 Single pole on-off switch. Ganged with VR_1

Tuning Mechanism

- Horizontal tuning drive with scale plate, 2¾in drum and drive cord. (Osmor Radio Products Ltd.)

Chassis Components

- Paxolin panel, 10¼ x 7¼ x $\frac{1}{16}$in thick
- Actual-size paper drilling template (Osmor Radio Products Ltd.)
- Heat sinks, 5 x 7mm, with clips (Osmor Radio Products Ltd.)
- 3 knobs, approximately 1¼in o.d.

Battery and Connectors

- 7.5 volt battery type AD38 (Ever Ready) or 9 volt battery, as required
- AD38 type battery plug (for 7.5 volt battery) or non-reversible connectors (for 9 volt battery)

Miscellaneous

- 24 s.w.g. tinned copper wire
- 1mm sleeving (preferably green, red, black and yellow)
- Flex
- 3 ¼in 4BA bolts with washers (tuning capacitor mounting)
- 1 ¾in 4BA bolt with 3 nuts (aerial mounting)
- Small quantity 6BA and 4BA nuts, bolts, washers and solder tags

one side, these being for collector, centre tap ("CT") and collector. The two leads on the other side are for the speaker. This transformer has mounting lugs, which pass through slots made by drilling two or three small holes closely together. The lugs are then bent over or twisted to hold the transformer. One lug is joined to the earth line as illustrated in Fig. 5 at the point marked "T_2 core".

Wavechange Switch

The wavechange switch is top left, Fig. 4, and is a single pole 2-way component. With tags 1 and 2 short-circuited, the ferrite rod long wave section is out of action, giving medium wave tuning. With tags 2 and 3 short-circuited, the l.w. section is in circuit, and C_4 and CT_3 are introduced to give suitable coverage in the oscillator section.

Gang Capacitor and Trimmers

The tuning capacitor is held by three 4BA bolts. These must be very short, or be provided with extra washers or nuts to ensure that they do not touch the fixed plates of the capacitor, or foul the moving plates when they are finally screwed home. A tag is secured under one bolt (see Fig. 5) for earthing.

The front section of the 2-gang capacitor (208pF) tunes the aerial, its tag being that nearer the panel (Fig. 4). The rear section (176pF) has a connection to CT_2 (Fig. 4). This lead should not run near the 208pF section or against the capacitor frame.

Each trimmer requires three holes—two for tags, and a central hole for the rear projection of the adjusting screw. A trimmer is shown in Fig. 2, and it is best to take the top plate tag (indicated as "E") to the earth side of the circuit, to avoid unnecessary capacitance effects when trimming. Check that all plates on the trimmers can open fully.

AF117 Transistors

The AF117 transistors have four leads as illustrated in Fig. 2. These are for emitter, base, screen, and collector. To avoid any confusion when the transistors are in position, it is suggested that ⅜in lengths of green, yellow and red 1mm sleeving are cut and fitted over the leads. Green sleeving is used on the emitter lead, yellow on the base lead, and red

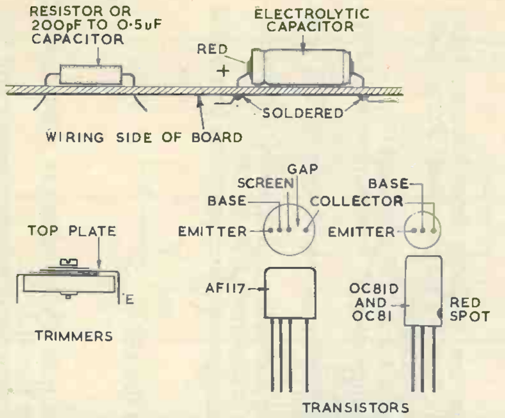

Fig. 2. Illustrating the manner in which resistors and capacitors are mounted on the board. Also illustrated are the trimmer and transistor connections

on the collector lead. The screen lead is left bare. This prevents short-circuits between leads, and allows connections to be readily checked.

The transistor wires should not be bent near the body. The soldering iron must be removed immediately the joint is made, as lengthy heating will cause damage. Preferably, a heat shunt clip should be placed on the transistor leads as they are soldered. In the diagrams "E" is emitter, "B" is base, "C" is collector, and "S" is screen.

Diode and Audio Transistors

The diode has positive (indicated by a coloured band) and negative ends, which must be correctly positioned. Its leads should be at least ½in long, and it is soldered as for a transistor.

The OC81D and OC81 transistors have three leads, as in Fig. 2. Pieces of green, yellow and red sleeving ½in long on the OC81D wires will identify its connections as with the AF117's. The OC81 output transistor wires can have 1in lengths of sleeving, and the same method of colour coding is recommended.

Each heat sink is of stout aluminium, about 5 x 7mm, with a flange to take two 6BA bolts. Tags are placed under the nuts, and provide anchor points for earth circuit wiring. These points are marked "HS" in Fig. 5.

The transistors are fitted in their clips, which are

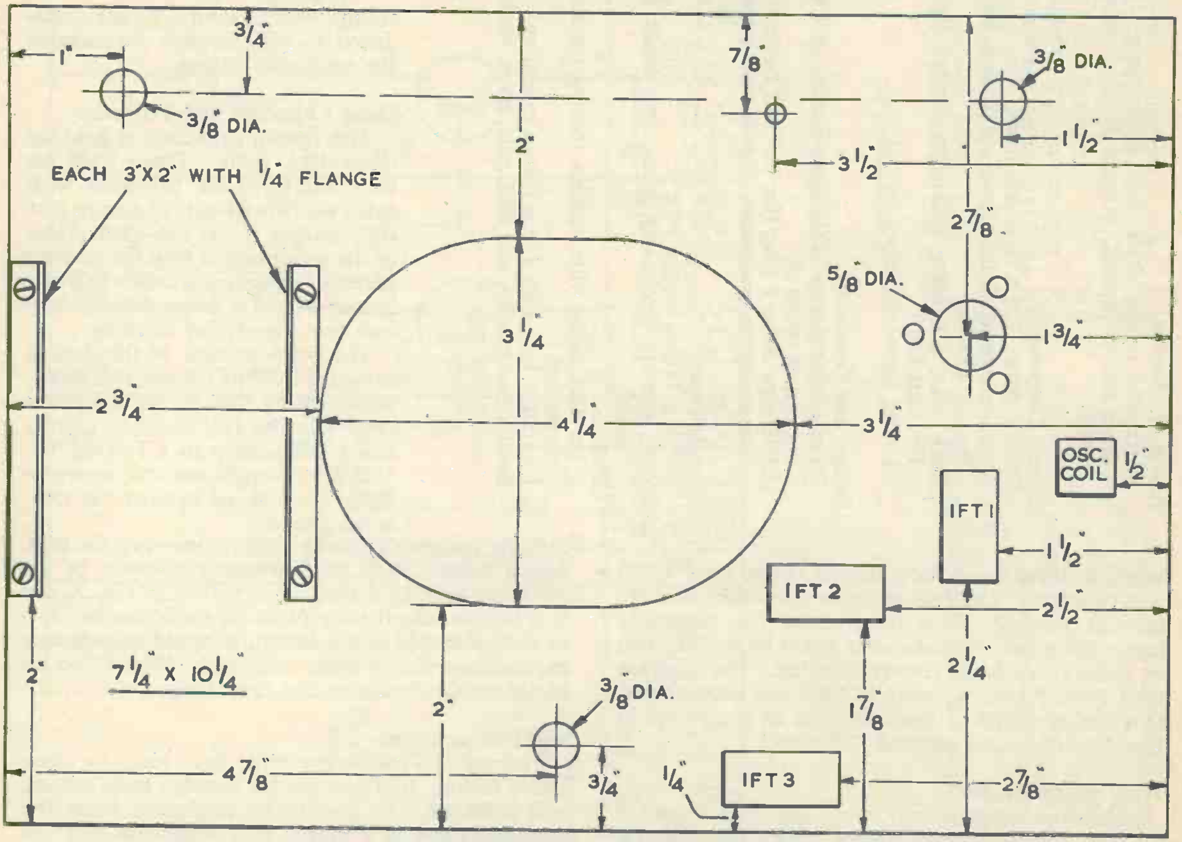

Fig. 3. The principal holes required in the Paxolin board. As is explained in the text, the board may be secured, with spacing nuts, on the four speaker mounting bolts. The positioning of the four holes needed for such mounting can be taken from the loudspeaker employed

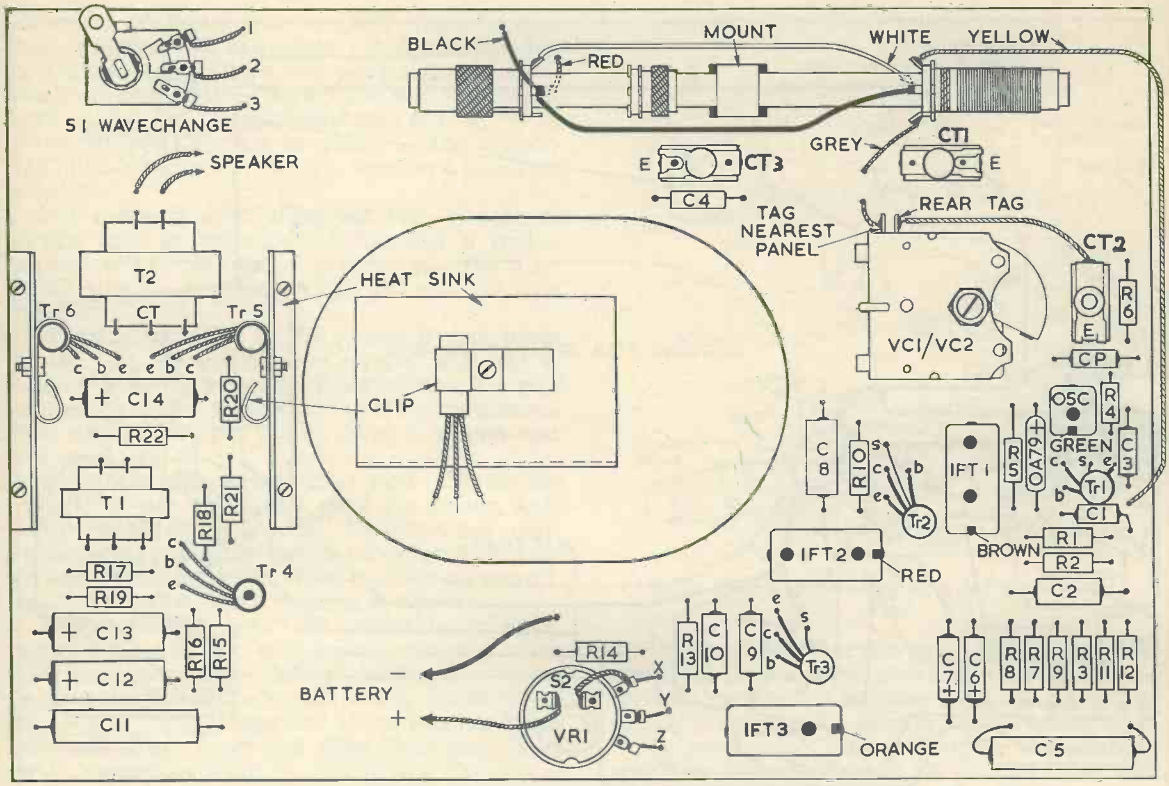

Fig. 4. Showing the positions occupied by all the components on the panel

then bolted to the heat sinks. The transistor leads should not be under stress, so soldering is best left until last.

Ferrite Aerial

As with the transistors, it is recommended that the ferrite aerial be provided with colour coded leads, as this makes connecting up much easier once the aerial is in position. In Fig. 4 the left-hand winding is for long waves and the right-hand winding for medium waves. The centre winding is for aerial coupling and can be omitted if an external aerial is not to be used.

The ferrite aerial can first be prepared as in Fig. 6. Connections to the l.w. and m.w. sections are as seen when viewing the coils from their tagged ends. The l.w. section has an unused tag, and the m.w. section has one tag bent up, for identification. Thin flex is best for wiring here, so that the coils can be slid along the rod. After adding leads as shown, place the coils with their tagged ends facing the centre.

The ferrite rod is secured to its mount by passing adhesive tape through the slot. The mount is fixed with a 4BA bolt with extra nuts.

Leads are connected as follows: yellow to C_1, grey to CT_1 and VC_1, red to earth line, and black to tag 1 on the wavechange switch.

If the coupling winding is provided, take one tag to the earth line and the other to a coaxial socket, for aerial connection. Earth the outer sleeve of the socket. Some temporary vehicle aerials simply clip on a window. The aerial lead goes to a coaxial plug to fit the socket. The ferrite rod aerial is unsatisfactory in a vehicle because of screening and directive effects.

Other Wiring

Black flex provides the battery negative connection (see Fig. 5). For a 7.5 volt supply a 2-pin AD38 plug is used, the large pin being positive. The 7.5 volt battery is adequate for all normal purposes. If a 9 volt supply is adopted, use non-reversible clips. Correct polarity must always be observed and this can be checked against the markings on the battery case.

A foot or so of thin twin flex connects the output transformer secondary to the speaker speech coil tags. The flex is anchored in small holes near the transformer.

Tuning Drive

The scale plate is held by the tuning drive spindle, Fig. 6, which passes through the plate and the Paxolin panel. The wavechange switch spindle passes through the other end of the plate. A 6BA

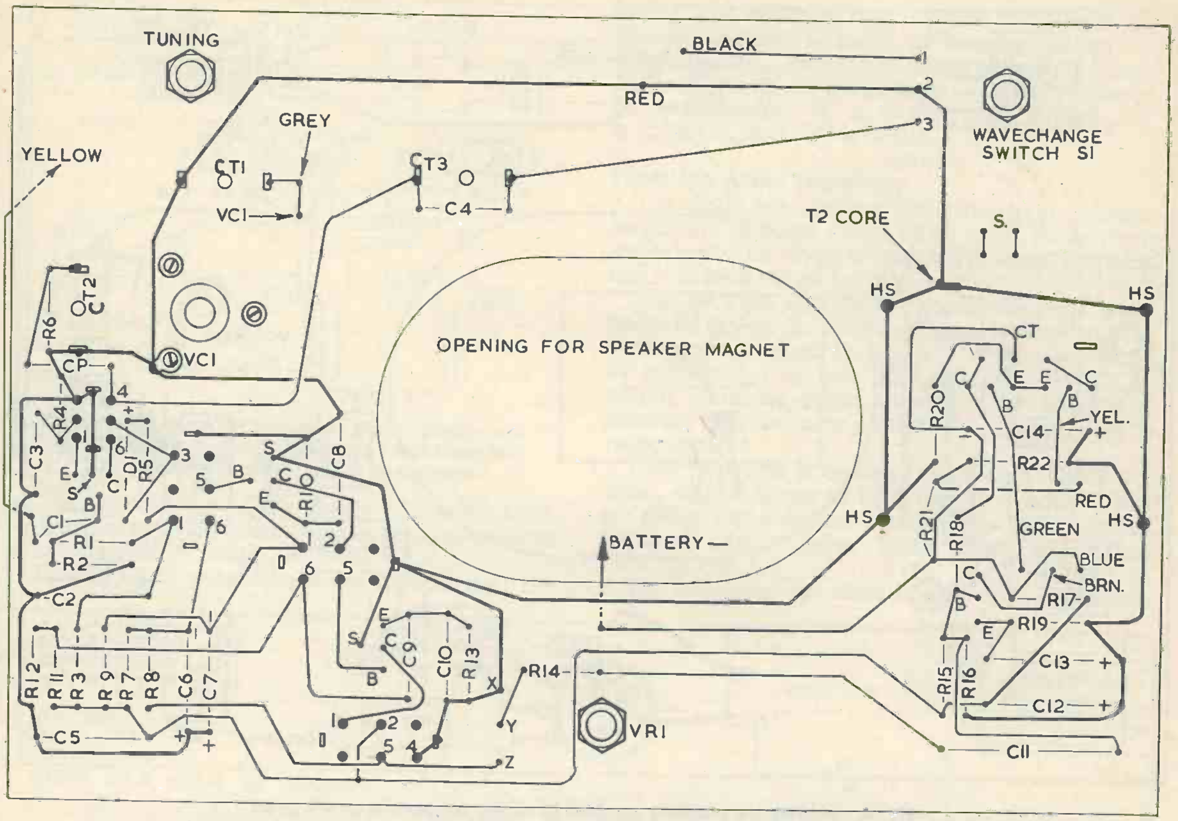

Fig. 5. The receiver wiring plan. The points marked "HS" refer to solder tags under the heat sink securing nuts, and those marked "S" (immediately below the wavechange switch) to the speaker connections

or 4BA bolt with three nuts can be used between panel and plate, if desired, to keep these parallel at the switch end.

The drive cord has a complete turn round the drive spindle, then passes over the wheels as in Fig. 6. Nylon cord is not recommended as it does not grip well. Suitable cord is supplied with the drive. Both ends of the cord pass through the drum slot and are tied so that the spring is under tension, allowing the drive to work correctly. Adjust the drum on the capacitor spindle so that the full 180 degrees rotation is obtained, and tighten the set screw.

Fig. 7 is the wavelength scale, this being secured with adhesive. The pointer clips on the cord and is adjusted to match up with the scale.

Fit knobs on the control spindles. All alignment adjustments can be made from behind, with the set in its cabinet. However, a check is best made with the receiver out of its cabinet, to see that all is in order.

Alignment

Alignment is carried out in three steps: (1) i.f. transformer cores, (2) medium waves, (3) long waves. Adjustments can be carried out with the aid of a signal generator, or by tuning in stations.

For initial rough adjustment, choose strong stations. However, final adjustment should always be with weak signals, with the receiver volume control turned well up towards maximum. The a.g.c. circuit makes accurate adjustment difficult with strong signals.

To set the i.f. transformer cores with no generator, tune in any station and adjust each core for best results. No core should be fully in nor should it project overmuch. If this happens, move all cores a turn or two in the same direction and repeat the adjustment.

If a generator is available, set it for 470 kc/s. Inject via an 0.01μF capacitor at pin 5 of IFT$_2$, and adjust IFT$_3$. Then inject at pin 5 of IFT$_1$ and adjust IFT$_2$. Finally, inject at C$_1$ and adjust IFT$_1$. Reduce generator output and touch up all i.f. transformers. If the generator output is modulated, a 0–50mA or similar meter in one battery lead will show resonance, as this corresponds with maximum current. Keep the generator input down so that maximum current is 20–30mA or so, with the receiver audio gain at maximum.

Once the i.f. transformers have been adjusted leave them completely alone. Tuning will be sharper than with single-tuned transformers and better reception of distant stations, with more freedom from whistles, will be noticed. If it is found that oscillation begins with a very weak signal, unscrew the lower core of IFT_1 slightly and screw in the top core of IFT_1 and the right-hand core of IFT_2. Only a fraction of a turn may be required. This staggering of i.f. transformers is quite usual in a high gain amplifier.

For medium wave alignment the wavechange switch knob is rotated clockwise and a station around 450 to 500 metres is tuned in. The m.w. aerial winding is moved along the rod for best results.

A station near 200 to 250 metres is then tuned in and CT_1 adjusted for best results. It is best to begin with all trimmers fully unscrewed. If a generator is available, use this instead of finding stations. The generator output can be taken to a loop near the aerial.

If stations (or wavelengths) near 450 to 500 metres do not correspond with the tuning scale positions, slowly rotate the oscillator coil core, meanwhile keeping the station (or generator) tuned in with the tuning knob. When readings are correct, readjust the m.w. aerial winding as above.

Should readings near 200 metres be in error, adjust CT_2 until this is corrected, also readjusting CT_1 for best results. Suitable stations for tuning include the Third Programme 464m, North 434m, N. Ireland and N.E. England 261m, London 330m, Scotland 371m, South and West 285m and 206m, and Luxembourg 208m.

Long wave alignment comes next. Rotate the wavechange switch knob anti-clockwise and adjust CT_3 and the l.w. winding on the rod until the Light Programme is best received on 1,500 metres. Other l.w. stations should then be heard for adjustments over the band.

For all adjustments use an insulated tool, such as ebonite rod filed to match the core slots. A meter in one battery lead should indicate about 10 to 12mA, with no signal or at low volume, rising to 15 to 25mA with good volume, and 45mA or more on peaks with loud reception. Current drain increases as volume is raised, as is normal with transistor push-pull output.

Cabinet

Various cabinets can be obtained or made. The cabinet needs to be about 10¾ x 7½in inside and about 3¼in deep. The cabinet shown in the photographs was made from thin wood and covered with one of the various materials which can be purchased for such purposes. Clearance holes are cut for the control spindles and a window for the tuning scale.

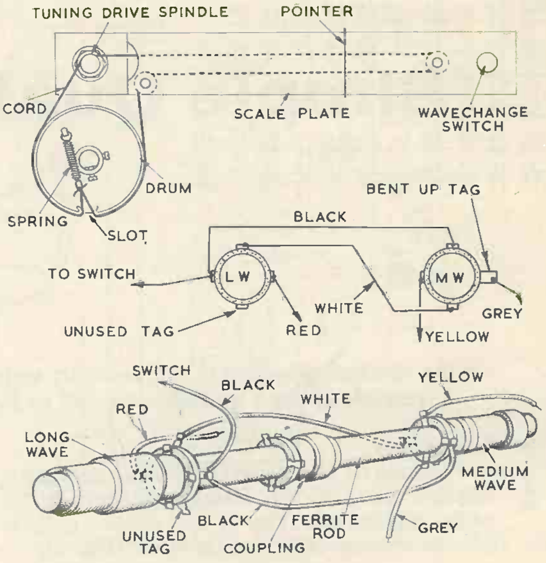

Fig. 6. Details of the tuning drive and the ferrite rod aerial

The loudspeaker is secured to the cabinet front with four 1½in bolts, which are placed so that they also pass through holes in the Paxolin panel. Additional nuts on these long bolts allow the panel to be secured at a correct distance to give clearance for the tuning mechanism. Alternatively, strips of wood may be glued and screwed inside the cabinet so that the panel can rest on them. A few small woodscrews, through holes in the panel, will then hold the receiver in its cabinet.

The receiver back can be held with woodscrews into wooden strips, or by self-tapping screws into brackets secured to the sides of the cabinet. The battery occupies the space to the left of VR_1.

The receiver should be found to have a performance more than adequate for all normal purposes. Note that if a different transformer is used for T_1 and an a.f. howl arises, then the set should be switched off at once and T_1 secondary connections reversed. This is to obtain the correct phase for the negative feedback via R_{18}.

Fig. 7. The tuning scale. This is reproduced full-size and may be cut out or copied

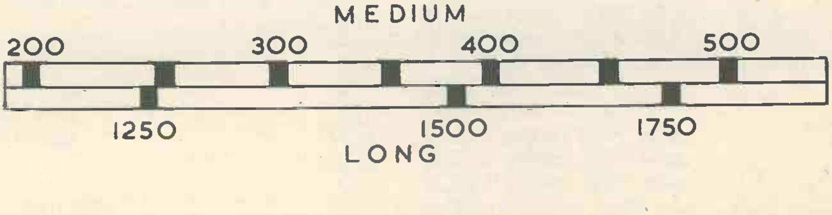

Simple Quality Oscilloscope

PART 2

By
D. M. Williams
B.Sc.

In the concluding article in this two-part series, our contributor describes both the a.c. and d.c. versions of the Y amplifier, as well as the power supply and cathode ray tube circuits

The Y Amplifiers

TWO VERSIONS OF THE Y AMPLIFIER ARE DESCRIBED: one for d.c. and low frequency, small signal audio applications (Fig. 5), and one for general a.c. radio and home experimental work (Fig. 6).

Both amplifiers use the same switched attenuator, which consists of capacitance compensated potential dividers. When setting up the attenuator a square wave generator is, strictly speaking, required. This is to allow the capacitor C_{16} to be adjusted to give

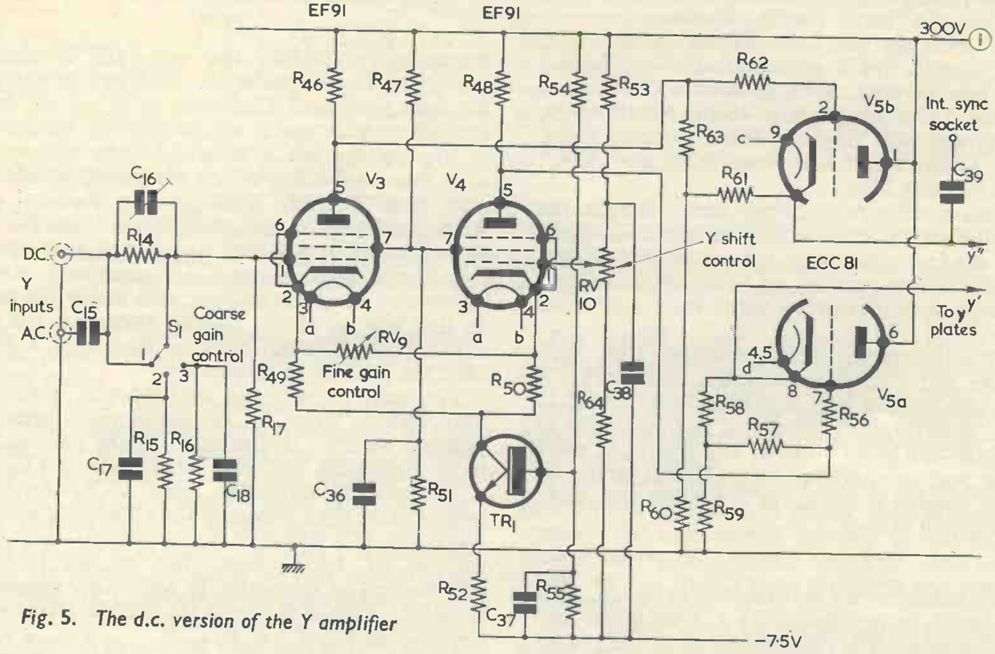

Fig. 5. The d.c. version of the Y amplifier

CUT ON
DOTTED LINE
TO REMOVE
TUNING SCALE
ON PAGE 267

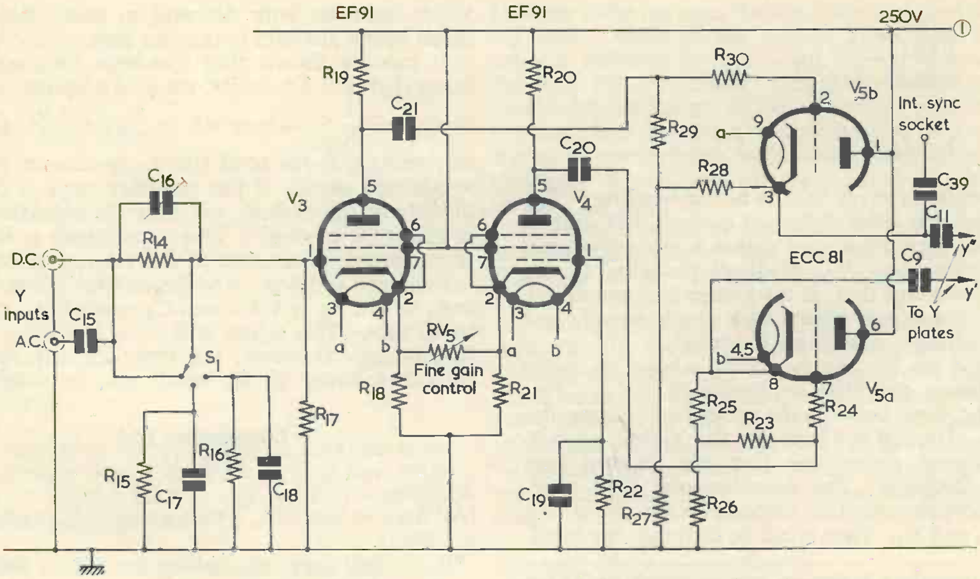

Fig. 6. Circuit of the a.c. Y amplifier

the correct high frequency compensation (Ref. 2). However, the author found the following method quite satisfactory. A sine wave with a frequency of about 10 kc/s and a fixed amplitude is fed to the oscilloscope input with the attenuator in position 1. (See Figs. 5 and 6.) The switch is then moved to position 2, and capacitor C_{16} adjusted until the trace is exactly one-fifth of its original height. As a further check this test can be carried out at various frequencies, and C_{16} adjusted until no further improvement is possible.

Components List
(Fig. 5)

Resistors
(All fixed values 10% ½ watt)

R_{46}	47kΩ	R_{57}	2.2MΩ
R_{47}	22kΩ	R_{58}	1.8kΩ
R_{48}	47kΩ	R_{59}	15kΩ
R_{49}	1kΩ	R_{60}	15kΩ
R_{50}	1kΩ	R_{61}	1.8kΩ
R_{51}	47kΩ	R_{62}	180Ω
R_{52}	470Ω	R_{63}	2.2MΩ
R_{53}	500kΩ	R_{64}	10kΩ
R_{54}	1MΩ		
R_{55}	15kΩ	RV_9	5kΩ linear, carbon track
R_{56}	180Ω	RV_{10}	10kΩ linear, carbon track

Capacitors

C_{36}	0.1µF paper, 250V wkg.
C_{37}	0.1µF paper, 250V wkg.
C_{38}	0.1µF paper, 250V wkg.

Transistor

TR_1	OC139, TK49C, NKT702

The performance specifications for the two amplifiers are detailed in Table II.

The Low Frequency Amplifier

The low frequency, high gain d.c. amplifier shown in Fig. 5 consists of a long-tailed pair circuit. A transistor provides the constant tail current instead of the long-tail resistor normally used. This technique obviates the need for a high voltage negative rail. Even with this circuit, however, it was found that a negative rail was still required, but of only 7.5 volts, which can easily be supplied by a battery

Components List
(Fig. 6)

Resistors
(All fixed values 10% ½ watt)

R_{14}	2.2MΩ	R_{23}	2.2MΩ
R_{15}	470kΩ	R_{24}	180Ω
R_{16}	100kΩ	R_{25}	1.8kΩ
R_{17}	2.2MΩ	R_{26}	15kΩ
R_{18}	470Ω	R_{27}	15kΩ
R_{19}	10kΩ	R_{28}	1.8kΩ
R_{20}	15kΩ	R_{29}	2.2MΩ
R_{21}	470Ω	R_{30}	180Ω
R_{22}	47kΩ	RV_5	1kΩ linear, carbon track

Capacitors

C_9	0.25µF paper, 350V wkg.
C_{11}	0.25µF paper, 350V wkg.
C_{15}	0.1µF paper, 500 V wkg.
C_{16}	7 to 45pF variable, ceramic or air-spaced
C_{17}	20pF silver-mica
C_{18}	500pF silver-mica
C_{19}	0.1µF paper, 150V wkg.
C_{20}	0.25µF paper, 250V wkg.
C_{21}	0.25µF paper, 250V wkg.
C_{39}	0.002µF paper, 350V wkg.

Valves

V_3	EF91, Z77
V_4	EF91, Z77
V_5	ECC81, 12AT7

Switch

S_1	1-pole, 3-way

or the rectified voltage from a heater winding.[1] The long-tailed pair gives balanced outputs 180° out of phase with each other, and makes a method of gain control utilising negative feedback possible. It also has the advantage that, as the system is symmetrical, ripple on the supply affects each anode equally and no hum voltages appear on the trace.

The grid of V_4 can be raised above or taken below chassis potential by means of RV_{10}. This gives a d.c. level between the anodes and, hence, the Y plates. Thus, RV_{10} provides the Y shift control. As mentioned above, the fine gain control uses negative feedback. The potentiometer RV_9 effectively short-circuits the cathode resistors of the valves V_3 and V_4. Thus it can be seen that the bandwidth increases with decrease in gain. All figures given below are with maximum gain.

It can be shown that the high frequency 3dB point (f_H) of a d.c. or RC coupled amplifier is given by $f_H = \frac{1}{2\pi R_L C_S}$ where RL is the anode load resistor, and C_S is the total shunt capacitance between anode and earth. If the amplifier stage is coupled directly to the cathode ray tube the capacitance C_S is about 30 or 40pF. This capacitance is the sum of the input capacitance of the valve, and the stray capacitance in leads, valve bases, etc. Thus, in this case, where R_L is 47kΩ and C_S is 40pF, f_H is equal to 80 kc/s. This figure is far too low for a useful instrument. However, the input capacitance of a cathode-follower is very small, and the output im-

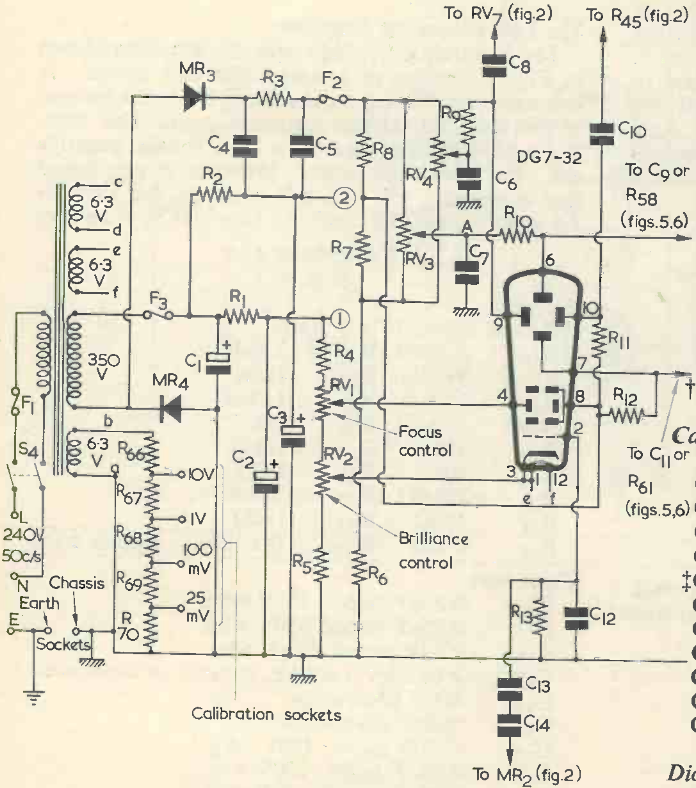

Fig. 7. The power supply and cathode ray tube circuit

Components List
(Fig. 7)

Resistors

(All fixed values 10% $\frac{1}{2}$ watt except where otherwise specified)

$^*R_1$	5kΩ (approx.—adjust for 250 or 300V h.t.—see text)
$^*R_2$	3.3kΩ (approx.—adjust for 300V h.t.)
R_3	120kΩ 10% 1 watt
R_4	180kΩ 10% 1 watt
R_5	100kΩ 10% 1 watt
R_6	1MΩ
R_7	220kΩ
R_8	220kΩ
R_9	2.2MΩ
R_{10}	3.9MΩ
R_{11}	2.2MΩ
R_{12}	3.9MΩ
R_{13}	150kΩ
R_{66}	6.8kΩ+1kΩ in series 1% $\frac{1}{2}$ watt
R_{67}	18kΩ+18kΩ in parallel 1% $\frac{1}{2}$ watt
R_{68}	1.8kΩ+1.8kΩ in parallel 1% $\frac{1}{2}$ watt
R_{69}	150Ω+150Ω in parallel 1% $\frac{1}{2}$ watt
R_{70}	47Ω+47Ω in parallel 1% $\frac{1}{2}$ watt
RV_1	250kΩ linear, carbon track
RV_2	100kΩ linear, carbon track
RV_3	1MΩ linear, carbon track
$^\dagger RV_4$	1MΩ linear, carbon track

Capacitors

C_1	16μF electrolytic, 450V wkg.
C_2	16μF electrolytic, 450V wkg.
C_3	32μF electrolytic, 450V wkg.
C_4	0.25μF paper, 500V wkg.
C_5	1μF paper, 500V wkg.
$^\ddagger C_6$	0.1μF paper, 1,000V wkg.
C_7	0.1μF paper, 1,000V wkg.
C_8	0.25μF paper, 500V wkg.
C_{10}	0.25μF paper, 500V wkg.
C_{12}	100pF silver-mica
C_{13}	0.25μF paper, 350V wkg.
C_{14}	0.25μF paper, 350V wkg.

Diodes

MR_3	Selenium rectifier, 350V r.m.s. at 3mA
MR_4	Selenium rectifier, 350V r.m.s. at 30mA

---

[1] In the prototype a battery was used to provide the 7.5 volt negative rail potential, since the current required is only of the order of 5mA. It should, alternatively, be possible to obtain the supply from the 6.3 volt winding a-b of the mains transformer (Fig. 7) by means of a half-wave rectifier and suitable reservoir and smoothing components.—EDITOR.

Mains Transformer
Primary 0–220, 240V, 50 c/s
Secondary 350V, 50mA
6.3V, c.t., 1.5A
§6.3V, 0.5A
6.3V, 0.5A

C.R.T.
DG7-32 (Mullard)

Switch

S_4	2-pole, 1-way, toggle

Fuses

F_1	1A
F_2	30mA
F_3	100mA

*3 *watt*
†*Fixed value when Fig.* 5 *amplifier is used* (*see text*)
‡*Omitted when Fig.* 5 *amplifier is used* (*see text*)
§*One* 6.3*V winding* (*c-d*) *is not required with the Fig.* 6 *Y amplifier* (*see text*)

pedance (the effective R_L) is small. Thus the value of C_S across the load resistor of the amplifier can be very much reduced by the insertion of a cathode follower stage between the amplifier and the cathode ray tube. Also, as the output impedance of the cathode follower is very small, the capacitance of the tube has less effect. Using this technique the bandwidth was raised to 250 kc/s with a gain of 200. Although this figure can be improved by very careful layout of components, accessibility then becomes a problem. As a general rule the leads should be kept as short as possible.

The synchronisation signal for the sync amplifier is taken from one of the outputs of the cathode followers to the "Internal Sync" socket of Fig. 2 (published in Part 1).

It will be noted, in Fig. 5, that the heater of V_5 is supplied by the separate mains transformer heater winding, c-d. See Fig. 7. A separate heater winding, which must not be earthed, is needed here because the cathodes can rise to nearly full h.t. potential. In the a.c. coupled version (Fig. 6) the cathodes of V_5 do not rise to so high a potential, and V_5 heater may then be run from the common heater winding, a-b.

The A.C. Coupled Amplifier

The second Y amplifier, shown in Fig. 6, is essentially a higher frequency a.c. coupled version

TABLE II

	Max. Gain	Bandwidth ±3dB.	Max. Sensitivity Atten. Range 1:1	Min. Sensitivity Atten. Range 20:1	Input Impedance Atten. Range 1:1	$\frac{1}{(R_{in}+j\omega C_{in})}$	
						5:1	20:1
A.C. coupled Y. amplifier	70	3 c/s—1 Mc/s	100mV(r.m.s.)/cm.	15V(r.m.s.)/cm.	$R_{in}=2M\Omega$ $C_{in}=20pF$	$R_{in}=2M\Omega$ $C_{in}=15pF$	$R_{in}=2M\Omega$ $C_{in}=13pF$
D.C. coupled Y amplifier	200	D.C.—250 kc/s	30mV(r.m.s.)/cm.	4V(r.m.s.)/cm.	,,	,,	,,

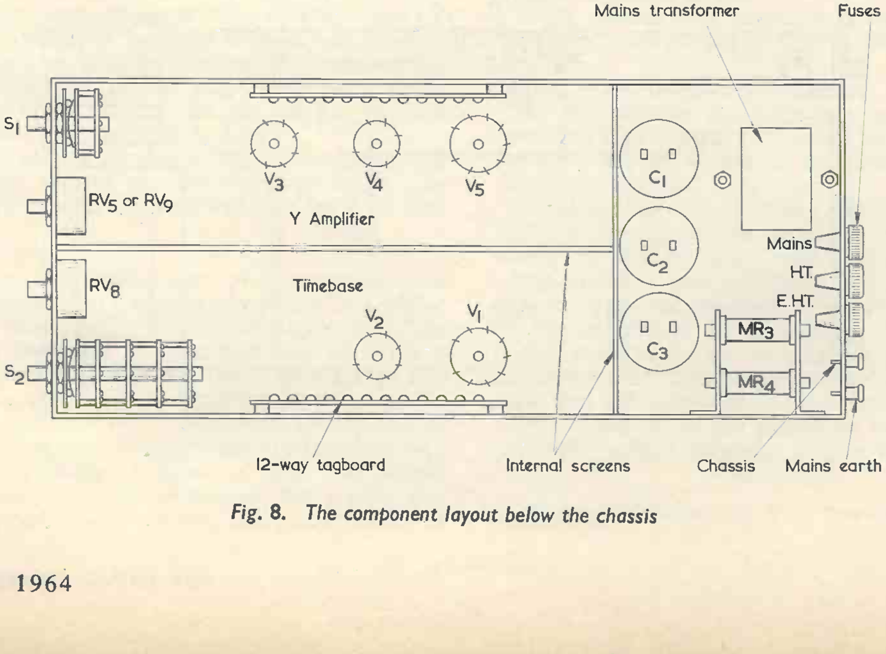

Fig. 8. The component layout below the chassis

TABLE III

Electrode	Signal Grid g_1	Suppressor Grid g_3	Screen Grid g_2	Cathode k	Anode a	Remarks
V_1 a	Approx. -0.5V			0	90V	With no sync. signal
V_1 b	Approx. -0.5V			0	120V	With timebase off
V_2	-1.5V	-1V	220V	0	130–140V	Voltages slightly influenced by RV_8 and S_2
V_3 and V_4 (Fig. 6)	0	2.5V	250V	2.5V	170V	
V_3 and V_4 (Fig. 5)	0	3.0V	210V	3.0V	180V	
V_5 (a) and (b)	40V for Fig. 6 180V for Fig. 5			40V for Fig. 6 180V for Fig. 5	H.T. volt	

All readings taken with model 8 Avometer

of the one described above. In this case the sum of the currents in the valves V_3 and V_4 need not be constant, as the Y shift is obtained elsewhere, and no long-tail or transistor is required.

The circuit then becomes a cathode-coupled amplifier with the gain controlled by altering the negative feedback in the cathodes. The amplifier is balanced by adjustment of the anode load resistors, R_{19} and R_{20}. With the new valves, the values specified for Fig. 6 will prove quite satisfactory. The amplifier is a.c. coupled to a pair of cathode-followers, after which there is a further a.c. coupling to the cathode ray tube. Although the amplifier is a.c. coupled, both a.c. and d.c. input sockets are provided. This is because capacitor C_{15} can, in certain cases, be the cause of phase shifts in the signal, and hence a direct connection to the oscilloscope is desirable.

Calibration voltages are obtainable from sockets mounted on the front panel. These sockets are supplied from a heater winding on the mains transformer, the voltage being divided into suitable values

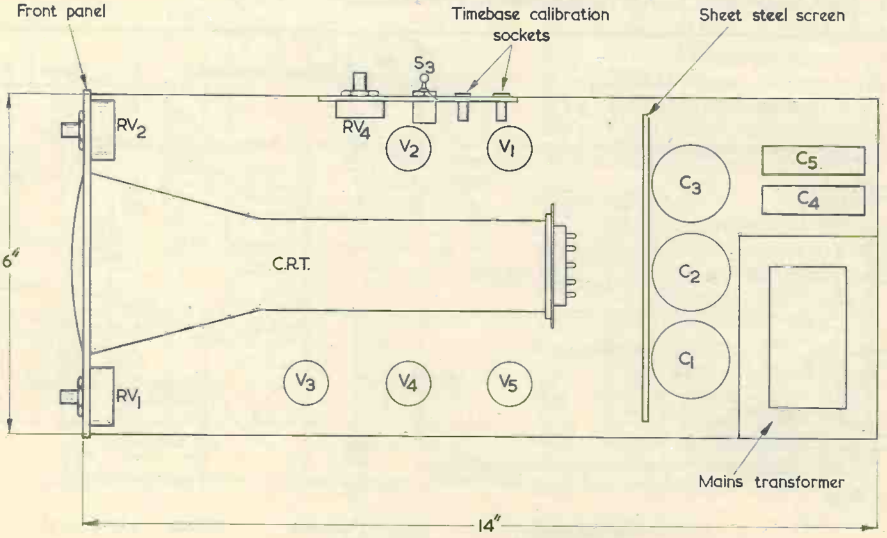

Fig. 9. The above-chassis layout

by the resistor chain R_{66} to R_{70}. See Fig. 7. The values found most useful are 10 volts, 1 volt, 100 millivolts and 25 millivolts, peak-to-peak.

The Shift Controls

As mentioned previously the DG7-32 tube is designed for symmetrical deflection, i.e. equal but opposite voltages applied to the X and Y plates. This stipulation applies equally to both signal and shift voltages, and hence a symmetrical system of shift controls should be used, employing double ganged potentiometers. However, the author has found that very little astigmatism or defocusing is introduced by using a simpler and cheaper single potentiometer system. Thus, in this design, RV_3 of Fig. 7 is the Y shift control for the a.c. coupled amplifier, and RV_4 the X shift control. It is essential to decouple these components, and C_7 and C_6 fulfil this function.

For the d.c. coupled version of the Y amplifier the Y shift is obtained by adjusting RV_{10} (Fig. 5). In this case RV_3 is replaced by a fixed $1M\Omega$ resistor, C_7 is omitted and point A is connected directly to the final anode.

Power Supplies

The power unit must be able to supply two rails at 300 volts and one e.h.t. line at 700 volts; or one h.t. line of 300 volts and one of 250 volts, the e.h.t. requirement being the same. The 250 volt line is used with the a.c. coupled version of the Y amplifier (Fig. 6), and the 300 volt line with the d.c. version (Fig. 5). The current consumption is 30mA from the h.t. supply and 750μA from the e.h.t. line.

The DG7-32 cathode ray tube is so constructed that the final anode can be operated at a high positive potential with respect to chassis. This fact allows the simple voltage doubling system shown in Fig. 7 to be used. The circuit employs semiconductor rectifiers and a simple mains transformer. The transformer employed by the author was, in fact, taken from an early radio receiver.

Thorough decoupling of the timebase and Y amplifier supplies is required if cross-talk between the two systems is to be avoided. This decoupling is provided by R_2, C_3 and R_1, C_2, the value of R_1 depending upon whether the a.c. or d.c. coupled versions of the Y amplifier is used.

The assembly of the power unit is straightforward and should present no difficulties, although care should be exercised when dealing with the e.h.t. line.

Construction

The complete oscilloscope with power supplies was constructed on a chassis measuring 14 x 6in of 18 s.w.g. aluminium. The layout employed by the author is illustrated in Figs. 8, 9 and 10. This is quite conventional, and has the Y amplifier at one side of the tube and the timebase at the opposite side. The power supply components are situated at the rear of the tube to avoid magnetic coupling with the electron beam. A sheet of $\frac{1}{16}$in steel bolted directly behind the tube eliminated any trouble due to this cause in the prototype, and made the use of a Mu-metal shield for the tube unnecessary. The tuned circuits associated with the timebase calibration (see Fig. 4, Part 1) should also be mounted in the power supply compartment.

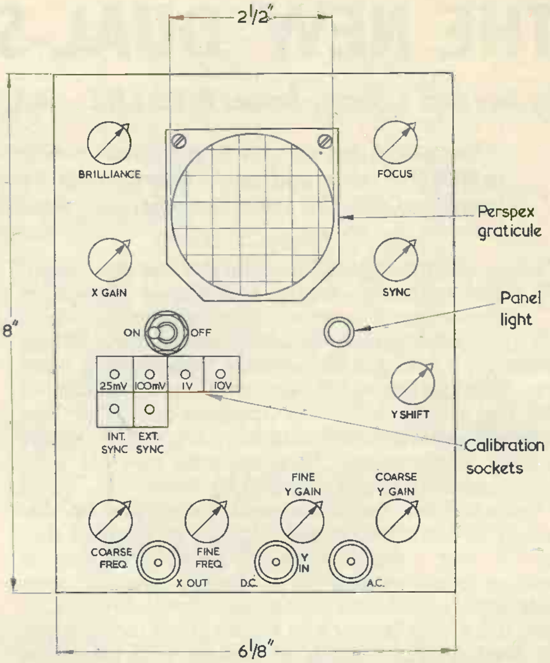

Fig. 10. The front panel, showing the layout of the controls and sockets

A resilient ring of a material such as rubber or felt should be fitted between the edges of the tube face and the front panel.

In the layout used by the author most of the components for the timebase and Y amplifier were mounted on tagboards bolted to the sides of the chassis as shown in Fig. 8.

As a general rule, throughout the construction the signal leads should be kept as short as possible.

Testing of the Completed Instrument

As the cathode ray tube can be damaged by operating it at a lower final anode voltage than 400, the e.h.t. supply should be first checked with the tube disconnected.

If the h.t. or e.h.t. supplies are functioning correctly, a horizontal line should appear across the screen as the brilliance and focus controls are advanced. If a spot instead of a line appears, this indicates that the timebase is not functioning, and its circuit should be checked. Table III gives typical voltages for the various valve electrodes. It should be noted that these voltages are only approximate and will vary with components and the meter used. However, if the potentials measured differ markedly, a fault condition can be assumed.

(*Conclusion*)

---

[2] *Reference.* Easterling, D. W., "Oscilloscope Equipment". Norman Price.

THE NEW DUAL-STANDARD TV SETS

By Gordon J. King, Assoc. Brit. I.R.E., M.T.S., M.I.P.R.E.

PART 7

This article, the seventh in our series on 405-625 line receivers, deals with the relative levels at which the vision and sound intermediate frequencies should appear at the vision detector, the combined 405-625 sound amplifier and detector circuits, sound a.g.c., and the locked oscillator discriminator

SINCE THE INTERCARRIER SOUND SIGNAL IS DERIVED from both the sound and vision signals, it follows that it must contain components which are modulated with both sound and vision. Vision effects on sound are not directly troublesome, however, because the vision uses amplitude modulation and the sound frequency modulation. The f.m. sound stages are designed to have a good amplitude limiting characteristic, thus ensuring that the a.m. vision signal is largely rejected by them.

Nevertheless, the sound can sometimes be disturbed by the video signal. It will be recalled that on 405 lines a mistuned sound i.f. channel may let through some of the vision signal. In this case, since both sound and vision use amplitude modulation, the vision is heard as a buzz from the speaker, the level of which tends to change with alteration in picture content. Here, of course, the sound detector demodulates, in the normal way, some of the vision signal, the most disturbing parts of which are the components at field frequency. The well-known symptom of "vision on sound" is thus created.

Intercarrier Buzz

On 625 lines, the equivalent symptom is called "intercarrier buzz". It is caused mainly by overloading and misalignment producing an alteration between the relative levels of the sound and vision signals at the vision detector. It will be remembered that the intercarrier signal arises because the non-linear characteristics of the vision detector act as a modulator to the two signals applied to it. The amplitude and purity of the intercarrier or difference-frequency signal is governed both by the ratio of the levels of the vision and sound signals at the vision detector and by the amplitude of each signal.

Frequency changer stages are governed similarly by like factors. The i.f. signal amplitude and purity depends upon the amplitude of the incoming signal and the local oscillator signal as well as upon the ratio of the levels of the two signals. Too great a local oscillator signal may cause distortion, while too little will impair the conversion efficiency. There is an optimum oscillator signal amplitude.

On 625-line television, the best results in the respects considered above are achieved when the level of the sound signal at the vision detector is about 30dB below the level of the vision signal. This ratio is not held closely consistent for sets of various makes, however. On some models the ratio is 25dB and on others 35dB, while other models again may use a ratio between these two extremes.

If the ratio of levels differs from the design optimum for any particular model, distortion of the resulting sound signal is likely to occur. Harmonic distortion can be troublesome in this respect, giving rise to poor quality sound plus, in some instances, intercarrier buzz.

It is most important, therefore, that the 625-line alignment be carried out very carefully so that the sound carrier in the common i.f. channel is always as close as possible to the specified amount below the vision carrier. This requirement is depicted in Fig. 9 of Part 2 of this series.[1]

The intercarrier sound signal from the vision detector is not usually strong enough in itself for application to the f.m. detector. Some form of intercarrier amplifier is needed, the signal output of which is then applied to the detector.

In dual-standard models the ordinary sound i.f. signal at 38.15 Mc/s also needs, of course, to be amplified when the set is working on the 405 line standard. The general arrangement in most dual-standard models, therefore, is for the 405 sound i.f. stage or stages to act as the intercarrier amplifier on 625 lines.

This is easily done, and often without elaborate switching, owing to the large difference in frequency between the 405 sound i.f. and the intercarrier signal (i.e., 38.15 Mc/s and 6 Mc/s). The sound amplifier is thus loaded at the grids and anodes with series-connected tuned circuits, one of the combination being tuned to 38.15 Mc/s and the other to 6 Mc/s.

There is a parallel of this technique in a.m./f.m. receivers, the i.f. channel being loaded both to the a.m. i.f. of 470 kc/s and the f.m. i.f. of 10.7 Mc/s. Again, this is possible because of the large frequency difference between the two signals.

Sound Channel

In Fig. 24 is shown the essential elements of the Thorn 850 series sound channel. Here we have two sound amplifier valves, V_{11} and V_{12}, the a.m. detector W_7, and the f.m. detector W_9 and W_{10}. In addition, the a.m. channel features a sound interference limiter of conventional design (using a germanium diode), shown here in block form.

Let us take the case of the 405 sound signal first. This is extracted from the sound take-off point following the v.h.f. tuner, and is applied to the signal grid of V_{11}, via transformer L_{21}, L_{22}, which is tuned to 38.15 Mc/s.

---

[1] "The New Dual-Standard TV Sets", Part 2. June 1964 issue.

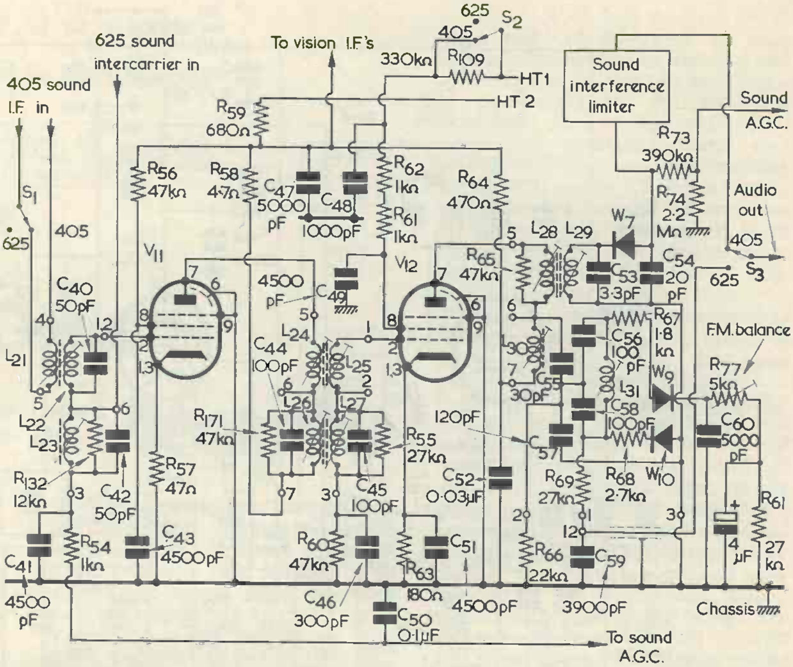

Fig. 24. The essential elements of the sound section of the Thorn 850 Series dual-standard model. Here diode W_7 is the a.m. detector and diodes W_9 and W_{10} the f.m. detector. V_{12} acts as an amplitude limiter on f.m. due to the introduction of R_{109} on 625 lines and the control grid time-constant circuit, R_{60} and C_{46}

L_{23}, in series with the input transformer, is tuned to the 6 Mc/s intercarrier frequency, but the effective high capacitance of this circuit "looks" to the 38.15 Mc/s signal as a short-circuit. It thus has no effect on a.m. sound operation. Likewise, L_{24}, L_{25} and L_{26}, L_{27} are the a.m. and f.m. coupling transformers, respectively, between V_{11} anode and V_{12} control grid.

The anode of V_{12} is loaded by the a.m. detector transformer, L_{28}, L_{29}, and the f.m. circuits, L_{30}, L_{31}. These feed the a.m. detector W_7 and the f.m. detector W_9 and W_{10}, respectively.

Thus, the amplifier channel is responsive equally to signals centred at 38.15 Mc/s and 6 Mc/s without switching. Moreover, the audio due to the a.m. signal and to the f.m. signal is developed at the appropriate detector output, again without switching.

So far as the 6 Mc/s intercarrier signal is concerned, the small inductance of the 38.15 Mc/s tuned circuits has barely any effect, and the intercarrier signal also passes through the channel unhindered.

The a.m.-derived audio is passed through the limiter to S_3 and this same switch also selects the f.m.-derived audio from the f.m. ratio detector. The switch thus selects which standard sound is in use, and passes on the audio to the a.f. stages.

It will be noted that the intercarrier signal is fed from its take-off point (from the vision detector in the case of the Thorn receiver) to the top of L_{23}. One section of the "standard change" switching assembly short-circuits the intercarrier line on 405 lines, this being the same switch section which changes the clamp diode over to the detector load on 625 lines to avoid a.g.c. blocking, as described earlier.

In the "405" position, switch S_1 of Fig. 24 applies the 38.15 Mc/s i.f. signal to L_{21}, L_{22}. In the "625" position, this circuit is shown as being disconnected. The 625 contact on the switch is, in the actual receiver, concerned with the response switching in the vision i.f. channel.

There is a little more to the sound amplifier than so far described. For one thing V_{12} acts as an amplitude limiter on 625 lines and as an ordinary i.f. amplifier on 405 lines. S_2 has a bearing on this. On the "625" position, R_{109} (the 330kΩ resistor) is added to the screen grid h.t. feed circuit of V_{12}. This tends to shorten the grid base of the valve, thereby causing it to limit (that is, give no more output even though the input signal amplitude is increased) at a lower level of signal than when the resistor is short-circuited on 405 lines. The limiting action is enhanced by the time-constant R_{60} and C_{46} in the control grid circuit.

Thus, on 625 lines, any amplitude disturbance of the f.m. signal fails to give any input (or gives only a very small input) to the f.m. detector. The detector responds only to the f.m. signal, so impulsive interference and intercarrier buzz resulting from amplitude modulation effects are considerably suppressed.

Sound A.G.C.

The two detector circuits operate in the conventional manner. The load for the a.m. detector, W_7, is R_{73}, R_{74}, and the d.c. voltage appearing at their junction is used as sound a.g.c. bias for application to the control grid of V_{11}. This voltage, of course, goes more negative with increase in signal amplitude and thus backs-off the gain of the channel on strong signals, whilst increasing the gain on weak ones.

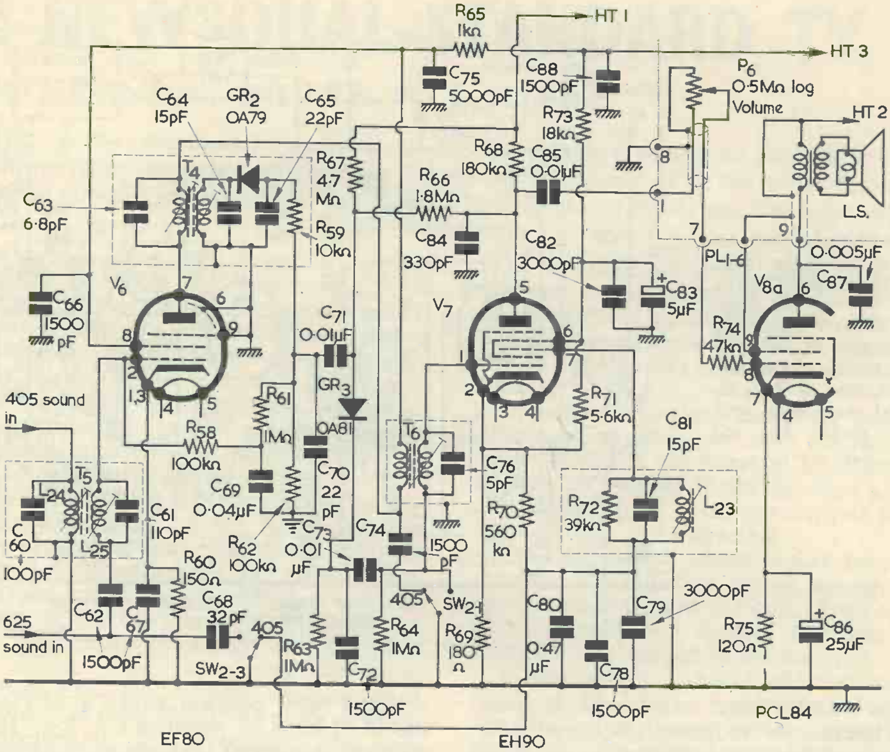

Fig. 25. In this circuit, V_7 is a heptode (Mullard EH90) which on 625 lines acts as an f.m. detector in the "locked oscillator discriminator" mode and on 405 lines acts as an a.f. amplifier. GR_2 is the a.m. detector and GR_3 the sound interference limiter on 405 lines only

On 625 lines such a.g.c. bias is unnecessary owing, for one thing, to the amplitude limiting action described above. On some models the a.g.c. line to the sound amplifier is short-circuited when the set is switched to 625 lines. Although there should, of course, be no control voltage from the a.m. detector when the set is working on 625 lines, there is, nevertheless, the possibility that the a.m. detector may pick up random signals, rectify them and apply them in the form of a bias to the sound amplifier valve. This would unnecessarily reduce the gain and probably inject into the channel some form of interference.

The a.g.c. time-constant and filter capacitors also charge on 405 lines, which could mean that the sound would be affected on changing standards. These factors are avoided when a short-circuiting switch is used.

It will also be realised that, since the 625 sound is passed through the vision i.f. channel, the gain control in that channel will tend to hold it steady, in addition to the amplitude limiting given in the sound channel itself.

Amplitude limiting must never happen on the 405 service, since this would distort the a.m. of that standard. Limiting of this kind is prevented, as intimated above, by reason of S_2 switching out R_{109} and increasing the grid base of V_{12}. Moreover, the level of the 38.15 Mc/s signal applied to the input of the amplifier is below that of the 6 Mc/s signal, since the latter passes through the vision i.f. amplifier and sometimes through the video amplifier as well, as we saw last month. There is, then, far more tendency for sound limiting to take place on 625 lines than on 405 lines.

A ratio detector has, itself, an inherent limiting characteristic, and thus further ensures that the f.m. sound of the 625 standard is reproduced with the minimum of amplitude interference in the form of crackles and intercarrier buzz. R_{77} in Fig. 24 is a preset component which balances the detector so that it has minimum response to a.m. signals. The adjustment is sometimes made for minimum intercarrier buzz.

Not all dual-standard sets use a ratio detector for 625-line sound. A number of models are now employing a heptode valve in this application using a rather special circuit called a "locked oscillator discriminator". On 405-line sound this same valve is used as an a.f. amplifier, feeding direct to the pentode output valve.

A sound channel circuit with such a valve (V_7) is given in Fig. 25. Here the sole sound amplifier is V_6, with GR_2 as the a.m. sound detector and GR_3 as the sound interference limiter. The output stage features the pentode section (V_8A) of a triode-pentode valve.

Fuller details of this circuit will be given in next month's article.

EDITOR'S NOTE.—As pointed out by the author, Fig. 25 will be referred to in detail in next month's contribution to this series. In consequence, this issue should be retained for reference.

(*To be continued*)

RADIO TOPICS . . .

by Recorder

AFTER POUNDING MY WEARY WAY round this year's rather depressing Radio Show at Earls Court, I decided to give myself a treat by calling in at the Musical Instruments Trade Fair which was held, during the end of August, at the Russell Hotel.

Everyone seems to be interested in electronic musical instruments these days—including, in particular, the electric guitar—and so I decided to see whether I could find a little background information on this subject. I was particularly interested in any points which would be of value to those who wish to make their own guitars.

Much of what I encountered is of the common-sense variety, and will be already known to the more experienced enthusiast. Nevertheless, there are beginners everywhere, and I feel that it would be better to pass on both simple and complex points here, rather than just a few snippets of advanced information.

The Electric Guitar

The electric guitar is, of course, a development of the purely acoustic guitar having a sound box, and it has strings with magnetic properties. These strings may consist, for instance, of nickel alloy tape-wound on chrome steel, or of similar combinations. When plucked, or picked, each string vibrates over a magnetised pole-piece fitted inside a coil of wire, causing corresponding electrical voltages to appear across the winding. The voltages across the coil are at the same frequency and amplitude as the vibrations in the string, and they may be amplified for subsequent reproduction over a loudspeaker.

A similar method of generating a.f. voltages is given by speaking into an ordinary magnetic headphone. The diaphragm vibrates at speech frequencies, and results in variations in the magnetic field between itself and the pole-pieces. These variations cause corresponding a.f. voltages to be induced in the headphone coils which may then be fed to an amplifier. The headphone thus functions as a microphone. With the electric guitar, variations appear in the field between the pole-piece and the string when the latter is plucked, and these similarly cause voltages to appear across the associated coil.

The guitar pole-pieces are fitted in a unit known as a "pick-up". This is rectangular in shape with pole pieces protruding along its length so that one appears under each string. The number, and spacing, of the pole-pieces depend upon the number and spacing of the strings. Most pick-ups have a single coil, but some of the more expensive types employ individual coils for each pole-piece. It is possible to purchase pick-ups which may be mounted by simply screwing down to a flat board.

Some present-day electric guitars have a construction which incorporates a sound-box, despite the fact that magnetic pick-ups are used. However, most instruments employ the "solid" construction, the body of the instrument being a solid piece of wood on which are mounted the pick-up (or pick-ups), the bridge and the controls. The Americans call these "plank" guitars.

There are a number of devices which may offer varying tones from the instrument, the simplest of these consisting of a "top-cut" tone control. One of these was demonstrated to me at the Fair and it offered a much wider range of control than does the tone control one finds in a domestic radio. At the "high end" of its travel the tone control allowed the fundamental and all overtones of the plucked string to be passed to the following amplifier. At the "low end" of its range the overtones were very heavily suppressed and the resulting sound was nearly all fundamental. The difference between the two tone colours was very striking. It is, of course, possible to obtain tones between these two extremes at mid-positions of the control.

Another method of obtaining different tones from the guitar is given by using more than one pick-up. If, without an amplifier, you pluck a string on a solid guitar near the end of the fingerboard and listen to the *acoustic* result, you will hear a somewhat mellow sound. If you pluck the string close to the bridge you will hear a note at the same frequency, but with an added piercing quality. It appears to follow that, if you mount a pick-up near the end of the fingerboard, and a second pick-up near the bridge, the a.f. voltages from the first pick-up will have the mellow quality, whilst those from the second pick-up will have the added piercing quality. There will be a significant difference between the outputs of these two pick-ups regardless of the point at which the string is picked. I must hasten to add that the term "piercing" is the subjective adjective I apply after hearing these effects myself. The more musically-minded may employ quite a different term.

One approach to obtaining different tonal colours from the guitar consists, therefore, of using two pick-ups and switching in either one or the other. A third pick-up, mounted between the first two, can also be employed, and it would give yet another type of sound. Further tone colours could then be obtained, with the aid of switches or potentiometers, by combining together, either in phase or out of phase, the outputs of two or more pick-ups. There appears to be a considerable field for experiment in this respect.

Turning to more mechanical aspects of the guitar, the "machine heads" are the devices at the head of the instrument which set the tension of the strings. For a bass guitar, a single robust machine head is required for each string. A single composite machine head assembly for all the strings is, normally, not husky enough.

As a final point, a fingerboard can be made up by cutting slots across the arm of the instrument at the appropriate intervals and inserting "fret wire". This is T-section wire,

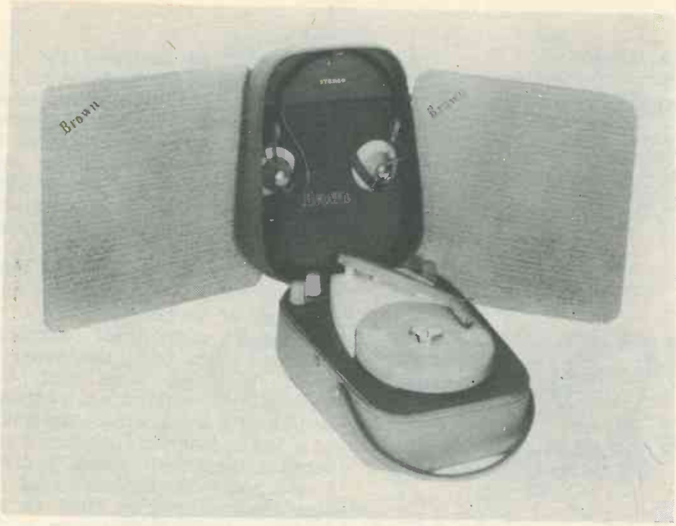

A completely portable battery powered stereo record player, manufactured by S. G. Brown, Ltd. This offers reproduction via loudspeakers or high fidelity headphones

and is especially manufactured for the job. The perpendicular part of the T fits in the slots, and it may be held in position more reliably by "ragging" the underside with a coarse file before insertion.

The above notes are not, of course, intended to go deeply into the fascinating subject of electric guitars but they may, I hope, give some useful information.

Good picking!

Portable Stereo Record Player

The accompanying photograph illustrates an interesting innovation by S. G. Brown Ltd., a Hawker Siddeley company.

The player operates at 3 speeds, gives stereo reproduction on loudspeakers or headphones and, by virtue of its battery power, is completely portable. The record player, high fidelity transducer headphones, and well-baffled loudspeakers are contained in two pigskin cases with a carrying handle and shoulder sling. The total weight is 12lb. The loudspeakers, on their own, weigh under 4½lb.

Features of the design are a high fidelity ceramic stereo cartridge, automatic start/stop, volume, tone and balance controls, 5 x 3in elliptical loudspeakers and an amplifier circuit incorporating 12 transistors.

Switch Abbreviations

It is always difficult for a newcomer to a hobby to absorb, at one go, all the unfamiliar factors which are presented to him. There are many elementary points which, whilst being obvious to the initiated, have to be explained.

One of these little matters has to do, so I'm told, with that device which we all take for granted—the switch. The beginner tends to get confused with such abbreviations as "d.p.s.t.", "s.p.d.t.", and so on. So let's spend a few moments expounding on this particular subject.

Fig. 1 (*a*) illustrates a switch whose only function is to open or close a single circuit. It has a single moving arm and we call it, therefore, a "single pole" switch. As it has only one useful contact it is known also as a "single throw" switch. The complete title is "single pole, single throw", or "s.p.s.t.".

In Fig. 1 (*b*) we introduce a second useful contact, whereupon we have a "double throw" switch. The complete description becomes "single pole, double throw" or "s.p.d.t.". In Fig. 1 (*c*) we have a second moving arm ganged to the first, giving us a "double pole" switch. Each moving arm has only one useful contact, and the full title is "double pole, single throw" or "d.p.s.t." In Fig. 1 (*d*) each moving arm has two useful contacts, so that we have a "double pole, double throw" or "d.p.d.t." switch.

And that's all there is to it so far as the abbreviations are concerned. I should add that a double throw switch may also be described as a "changeover" switch. Thus, Fig. 1 (*b*) can be called a "single pole changeover" switch and Fig. 1 (*d*) a "double pole changeover" switch. Sometimes, the single throw version is referred to as an "on-off" switch, whereupon Fig. 1 (*a*) becomes a "single pole on-off" switch and Fig. 1 (*c*) a "double pole on-off" switch.

Radio circuits frequently employ switches having more than two positions, and we then refer to the number of "ways" they have. Fig. 1 (*e*) is a "single pole, 3 way" switch, and Fig. 1 (*f*) a "3 pole, 4 way" switch.

Basement-end Coupling

The odd servicing jobs still continue, despite my protests, to come my way. A recent encounter I had with a radio receiver is, I feel, worth mentioning here, because it illustrates one of the minor pitfalls that beset the unwary in this field.

The set was a fairly old 4-plus-1 (i.e. 4 valves plus rectifier) mains superhet of a well-known make, covering long, medium and short waves. All that it reportedly suffered from was a broken dial cord. Not a difficult job by any means, and one that could quite comfortably fill in the odd half-hour.

After removing the works and blowing away the fluff, I gave the chassis a cursory glance, noting that it was of about 1950 vintage and had an isolating mains transformer. The only unusual point about it was that the long, medium and short wave aerial coils were all wound, one above the other, on a single air-cored former. This, about 2in in diameter and nearly 6in long, protruded up above the chassis next to the 2-gang tuning capacitor like one of the chimneys on Battersea Power Station.

Replacing the dial cord was rather a fiddling operation, and at one point my taper-nosed pliers slipped against the aerial coils on their

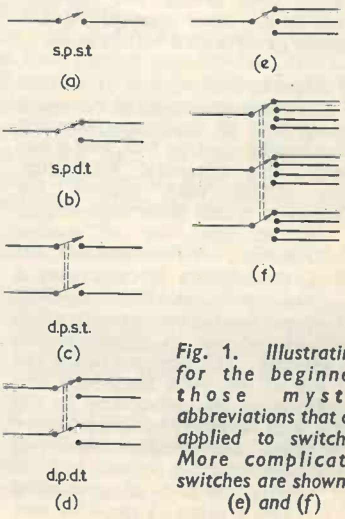

Fig. 1. Illustrating, for the beginner, those mystic abbreviations that are applied to switches. More complicated switches are shown in (e) and (f)

outsize former. There was no apparent damage, and so I finished stringing up the cord and switched on, poking a testmeter lead into the aerial socket to act as an aerial. A 4-plus-1 superhet is normally a lively receiver, and will usually give quite a good performance with only a few feet of wire as an aerial.

This one didn't. Several local stations on medium and long waves came in at reasonable volume and that was all. Removing the short aerial made very little difference. Indeed, there was hardly a crackle when the test prod was touched against the socket. I next held my hand close to the aerial coils on their air-cored former, to find that the medium and long wave stations rolled in, at full strength, in just the manner one would expect from a receiver of this type. This meant that, with my own body acting as an aerial capacitively coupled to the aerial tuned coils, medium and long wave reception was perfectly satisfactory. It seemed obvious that something had come unstuck between the aerial socket and these coils, and the horrible thought occurred to me that my taper-nosed pliers, in slipping, had broken an outside turn on the medium and long wave aerial coupling coil. This thought grew almost to a certainty when I found that, on the short wave band, performance was perfectly normal, with the test lead aerial acting *as* an aerial.

With the feeling that I was now lumbered with a really time-consuming job I examined the aerial coil assembly more carefully. There was, however, no winding on the former which obviously proclaimed itself as being intended for coupling purposes, so I fell back on a little circuit tracing. To find a coupling circuit which, had I cast my mind back to the period during which the receiver was made, I should have anticipated in the first place!

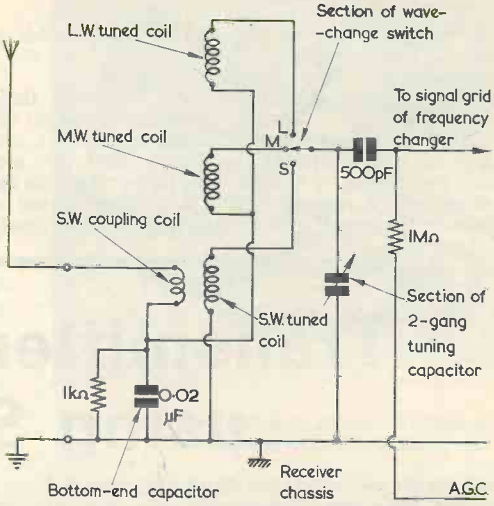

Fig. 2. The case of the high value bottom-end capacitor. The function of the 1kΩ resistor across this capacitor is to prevent mains modulation. For simplicity, trimmers are omitted

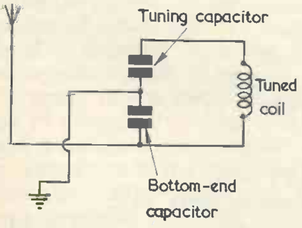

Fig. 3. When the components in a bottom-end coupling circuit are re-arranged, it may be seen that the aerial and earth couple into the capacitive section of the tuned circuit. The tuning capacitor will normally have a trimming capacitance of some 20pF or more in parallel with it

The coupling circuit is shown in Fig. 2 and, as most readers will recognise, is the familiar bottom-end arrangement. The aerial connects to the bottom-end capacitor via the short wave aerial coupling coil, with the result that a straightforward inductive coupling is given to the short wave tuned coil. On medium and long waves the aerial and earth are effectively applied to the bottom-end capacitor, whereupon the signal voltage is injected, via the few turns in the short wave coupling winding (which have negligible effect on medium and long waves), into part of the capacitance tuning the coil. The remaining capacitance is provided by the tuning capacitor. Fig. 3 shows the idea. Bottom-end coupling was commonly employed around 1950, and had the advantage of saving aerial coupling windings. Normally, sensitivity with a short aerial was not excessively below that given with inductively coupled circuits.

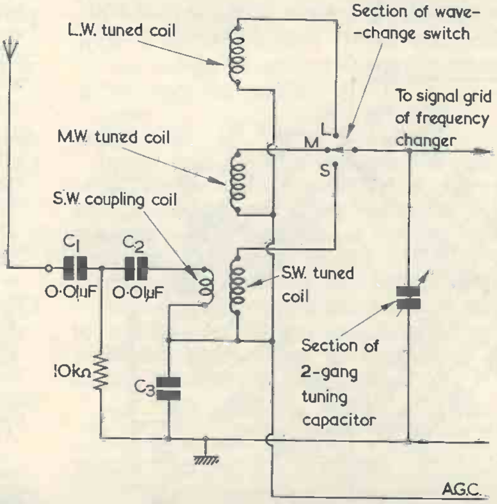

Fig. 4. A typical example of a more usual bottom-end coupling circuit. C_3 is the bottom-end capacitor and would normally have a value between 0.002 and 0.005μF. C_1 is an isolating capacitor and is only required if the receiver has a live chassis

The reason for the insensitivity of the particular set I was handling was that its designer had given the bottom-end capacitor the surprisingly high value of 0.02μF. Usual values for a capacitor in this position are in the region of 0.002 to 0.005μF, a circuit like that of Fig. 4 being employed, whereupon a reasonably high impedance is presented to the aerial. With this set, the input impedance was way down in the basement!

At any event, there was nothing wrong with the set after all. When I connected up a reasonable aerial it performed very nicely indeed.

The moral of this little story is that I would have saved myself a lot of anguish if I had quickly checked the performance of the receiver *before* I fitted the new dial cord. It would have been even more to the point if I had asked the set-owner what its performance was like when I took it in. He would then have informed me (as he did later) that he not only found it necessary to use a fairly long outside aerial but a good solid earth as well!

Transmitter Power Supply using Semiconductors

By **E. LAWRENCE**

Silicon Rectifiers give 1,000 volts at 220mA

THE WRITER WAS RECENTLY CONFRONTED WITH the task of converting a full-power amateur bands transmitter from a large floor-standing cabinet design to one of table-top form. Little could be done to compress the radio-frequency stages as these were already compact, but with a power unit employing bridge-connected mercury-vapour valve rectifiers, three large filament transformers, block-type paper dielectric smoothing capacitors and heavy duty chokes, together with the thermal delay switching circuits required by the mercury-vapour valves, it was quite obvious where to make a start. A change to solid-state rectification seemed the most profitable line of attack.

Silicon power rectifiers for this duty can now be obtained inexpensively, but while their physical and electrical characteristics make them especially attractive it has to be remembered that they are sensitive to overload, especially by transient voltage pulses. One can envisage having to replace them by the dozen every time the equipment is used. It is understandable, therefore, if there is an initial lack of confidence in the ability of such diminutive objects to perform this herculean task. While we can to a certain extent abuse thermionic valves, silicon diodes require a closer observation of the rules if the benefit of improved efficiency and long life is to be achieved.

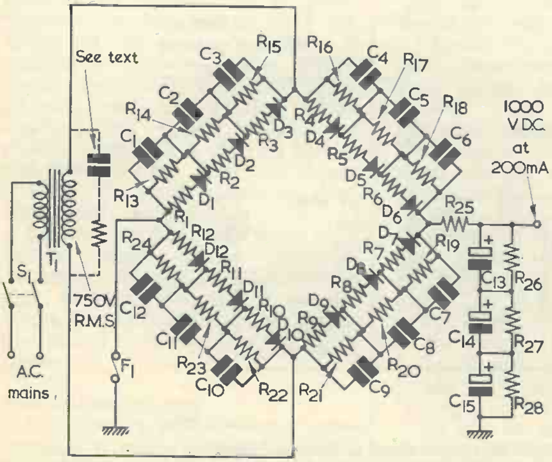

Complete power supply using silicon rectifiers and offering 1,000 volts d.c. output at 200mA

Design Factors

The principal factors which the designer must take into account are:

(1) The voltage applied during the non-conducting part of the cycle.

(2) Transient voltage peaks which exceed the working limits.

Components List

Resistors

(All 10% unless otherwise stated)

R_1–R_{12}	10Ω ½ watt
R_{13}–R_{24}	150kΩ ½ watt
R_{25}	30Ω 5 watts 20%
R_{26}–R_{28}	56kΩ 5 watts

Capacitors

C_1–C_{12}	0.001μF 1kV wkg.
C_{13}–C_{15}	80μF electrolytic 450V wkg.

Transformer

T_1 Mains transformer. Secondary voltage: 750V r.m.s. at 200mA

Semiconductors

D_1–D_{12} BY100

Fuse

F_1 500mA

Switch

S_1 d.p.s.t. on-off

(3) The maximum forward current.

(4) Operating and ambient temperature.

When assessing circuit requirements it is well to recognise that, in contrast to their valve counterparts, the characteristics of semiconductors tend to spread more widely. Where several are used in series to accommodate a high voltage, precautions must be taken to avoid one being over-loaded while its neighbour is under-run.

The rectification efficiency of the silicon diode is high; in a typical component it is possible to have a forward current measured in amperes with a relatively low level of internal heat generation, while in the reverse direction the resistance may be such as to limit the flow to a fraction of a milliampere. These characteristics, coupled with low internal capacity, unfortunately render them more susceptible to damage by voltage and current surges, which must be suppressed by appropriate circuit arrangements.

During the non-conducting part of the cycle the maximum permissible applied voltage is especially critical and if the stated limit is exceeded, even for only a short time, permanent damage will result. This reverse voltage is always specified by the makers in the form of a figure designated as the peak inverse voltage (p.i.v.) and in the case of a bridge circuit a factor of 1.5 times the smoothed d.c. output of the power unit provides a satisfactory practical approximation when selecting the type and number of rectifiers.*

Smoothing Capacitors

The compact, high value, high working voltage electrolytic capacitor has also profoundly affected the design of power units in recent years and, in the conversion which forms the subject of this article, advantage has been taken to gain further space-saving by employing several of these components in a series arrangement. These provide the degree of smoothing deemed sufficient for an r.f. power amplifier without resorting to bulky chokes. With a relatively high capacitance connected across the output of the rectifier circuit there is the added danger of exceeding the maximum forward current during the capacitor charging cycle, hence the introduction of small resistors in series with each diode (R_1–R_{12}) together with one in the supply lead to the capacitor bank (R_{25}).

A study of the circuit diagram may give a false idea of complexity. The 150kΩ resistors, R_{13}–R_{24}, form a voltage equalising network which overrides any variations in the characteristics of the rectifiers; while the 1,000pF capacitors, C_1–C_{12}, serve to suppress unwanted transient voltage impulses. All the components are in fact quite small as can be seen in the photograph, which shows them mounted between two tagstrips above the mains transformer. In this case the transformer runs quite cool and does not impede the ventilation of the diodes.

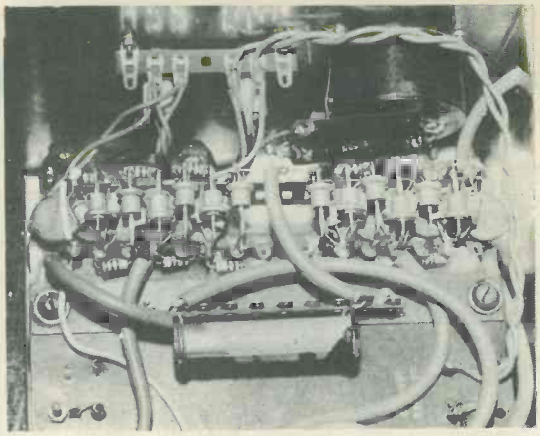
All the rectifiers and their associated components may be fitted to two tagstrips

The transformer has a nominal secondary rating of 750 volts r.m.s. About 1,100 volts d.c. output at the minimum load current of 40mA is obtained, this drain being due to the fact that the screen stabiliser valves are fed through a resistor from the main h.t. line. At the full load current of 200mA the d.c. output only falls to 1,000 volts, which represents quite an acceptable degree of regulation having regard to the simple filter circuit used. Under these conditions an assumed value of 1,650 volts "peak inverse" can be seen to be well within the total rating of three BY100 rectifiers, each of which has a recommended maximum of 800 volts.

Although not included in the unit described, a filter comprising a capacitor of about 1,000pF, with appropriate voltage rating, connected in series with a 1,000Ω resistor across the transformer secondary, can be included by readers proposing to embark upon a similar project. These components offer a further safeguard against unwanted transient voltage pulses from the mains.

Initial Tests

Initial tests both at reduced voltage with the aid of a "Variac" and then with the full mains applied were successful, and there was every indication that the unit would perform as desired. Subsequently, with the transmitter in the hands of a relatively inexperienced operator, this has been confirmed.

With this experience the writer is now a convert to solid-state rectifiers and hopes that this article will encourage others to investigate their use in similar situations.

EDITOR'S NOTE.—Amateur transmitting enthusiasts using the power supply described in this article will, of course, be fully aware of the necessity of following all safety precautions with regard to shock. *For the benefit of the beginner, however, it must be emphasised that the voltages which appear in the circuit, including the output voltage are very high and can result in very dangerous, if not lethal, shock.*

---

* With a bridge rectifier, the p.i.v. per arm is equal to 1.4 times the r.m.s. voltage offered by the transformer secondary. A 750 volt secondary, as in the present circuit, gives therefore a p.i.v. of 1,050. —EDITOR.

SINCLAIR RADIONICS LTD in their advertisement in our last issue, "total harmonic distortion of the X10 amplifier" should have read "less than 0.1%".

THE MODERN BOOK CO

Guide to Broadcasting Stations. Compiled by "WW". **5s.** *Postage 6d.*

Dual-Standard and 625-Line Television Receivers. By G. J. King. **8s. 6d.** *Postage 6d.*

The Radio Amateur's Handbook, 1964 Ed. By A.R.R.L. **36s.** *Postage 2s. 3d.*

The Tape Recorder. By C. G. Nijsen. **13s. 6d.** *Postage 1s.*

Aerials. By D. Sjobbema. **10s. 6d.** *Postage 1s.*

Frequency Divider Organs. By A. Douglas. **25s.** *Postage 1s.*

Radio, Television & Electrical Repairs. By R. C. Norris. **50s.** *Postage 2s.*

Radio Valve Data, 7th Ed. Compiled by "WW". **7s. 6d.** *Postage 10d.*

ABC's of Short-Wave Listening. By L. Buckwalter. **16s.** *Postage 9d.*

Radio Servicing. By G. N. Patchett and B. Fozard. **27s. 6d.** *Postage 1s.*

An Electronic Organ for the Home Constructor. By A. Douglas. **20s.** *Postage 1s.*

Basic Theory and Application of Transistors. U.S. Dept. of the Army. **10s.** *Postage 1s.*

Audio Quality. By G. Slot. **13s. 6d.** *Postage 1s.*

Short Wave Amateur Radio. By J. Schaap. **21s.** *Postage 1s.*

Electronics Pocket Book. By J. P. Hawker and J. A. Reddihough. **21s.** *Postage 9d.*

Beginner's Guide to Electronics. By T. L. Squires. **15s.** *Postage 9d.*

Complete Catalogue 1s.

We have the Finest Selection of British and American Radio Books in the Country

19-21 PRAED STREET (Dept RC) LONDON W2

Telephone PADdington 4185

JACKSON

the big name in PRECISION components

Precision built radio components are an important contribution to the radio and communications industry.

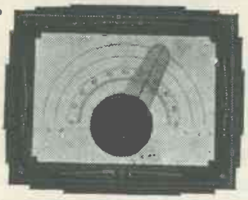

No. 6/36 DRIVE

Incorporating the Dual Ratio Ball Drive providing 36–1 Slow drive and 6–1 Fast drive under one knob with co-axial control. Scale is calibrated 0-100 and an extra blank scale is provided for individual calibration.

The unit consists of aluminium back plate, drive unit, scale, spare scale, transparent cover, hair-line pointer, escutcheon and knob. Fits in front of panel which may be any thickness up to ½" (or more by providing longer screws).

It's reliable if it's made by JACKSONS !

JACKSON BROS. (LONDON) LIMITED

Dept. RC, KINGSWAY-WADDON, CROYDON, SURREY
Phone Croydon 2754–5 *Grams* Walfilco, Souphone, London

pitman

AN ELECTRONIC ORGAN FOR THE HOME CONSTRUCTOR

Alan Douglas, Sen. Mem. I.E.E.E.

A very popular "how to make it" book. Shows exactly what is involved in work and materials (a list of sources of supply is included) in constructing an inexpensive instrument for use in the home. For this new edition, an alternative arrangement of continuous tuning has been added to a revised and up-to-date text.

Second edition 20s net

from all booksellers
Pitman Parker St London WC2

SMALL ADVERTISEMENTS

Rate: 9d. per word. Minimum charge 12/–.

Box No. 2/– extra.

Advertisements must be prepaid and all copy must be received by the 4th of the month for insertion in the following month's issue. The Publishers cannot be held liable in any way for printing errors or omissions, nor can they accept responsibility for the *bona fides* of advertisers. (Replies to Box numbers should be addressed to: Box No. —, *The Radio Constructor*, 57 Maida Vale, London, W.9.)

DIRECT TV REPLACEMENTS LTD. Largest stockists of TV components in the U.K. Line output transformers, Frame output transformers, Deflector coils for most makes. Official sole suppliers for many set makers. Same day despatch service. Terms C.O.D. or C.W.O. Send S.A.E. for quotes. Day and night telephone: Gipsy Hill 6166.—126 Hamilton Road, West Norwood, London, S.E.27.

THE INCORPORATED PRACTITIONERS IN RADIO AND ELECTRONICS (I.P.R.E.) LTD. Membership conditions booklet 1s. Sample copy of I.P.R.E. Official Journal 2s. post free.—Dept. D, Secretary, 32 Kidmore Road, Caversham, Reading, Berkshire.

SERVICE SHEETS, 1925–1964. From 1s. Catalogue 6,000 models, 1s. 6d. S.A.E. enquiries.—Hamilton Radio, 13 Western Road, St. Leonards, Sussex.

CATALOGUE No. 15. Government surplus electrical and radio equipment. Hundreds of items at bargain prices for the experimenter and research engineer, 2s. 6d. post free. Catalogue cost refunded on purchase of 50s.—Arthur Sallis Radio Control Ltd., 93 North Road, Brighton.

HIGH QUALITY "BRAND FIVE" RECORDING TAPE at reduced prices. Acetate. 5in, 900ft, 13s.; 5¾in, 1,200ft, 16s. 6d.; 7in, 1,800ft, 24s. 6d.; Mylar 5in, 1,200ft, 26s. All new. Money back guarantee. All enquiries S.A.E.—Spectron, 6 Bingham Road, Radcliffe-on-Trent, Nottingham.

S.E.S. SERVICE SHEETS for all Television, Radio, etc. Lists 1s. 6d. plus S.A.E.—Sun Electrical Services, 38 St. George's Road, Hastings, Sussex.

METALWORK. All types cabinets, chassis, racks, etc., to your specifications.—Philpott's Metalworks Ltd., Chapman Street, Loughborough.

FIND TV SET TROUBLES IN MINUTES from that great book *The Principles of TV Receiver Servicing*, 10s. 6d., all book houses and radio wholesalers. If not in stock, from—Dept. D, Secretary, 32 Kidmore Road, Caversham, Reading, Berkshire.

HAMMER FINISH PAINT. The modern finish for electronics. Can be brushed or sprayed. Blue or silver. 2½ oz. tins 3s. 6d., ½ pint 7s. 6d., 1 pint 15s. Post 6d. on any order. Trade supplied.—Finnigan Speciality Paints, (RC), Mickley Square, Stocksfield, Northumberland.

continued on page 285

BENTLEY ACOUSTIC CORPORATION LTD

38 CHALCOT ROAD CHALK FARM LONDON NW1

THE VALVE SPECIALISTS *Telephone* PRIMROSE 9090

1L4	2/3	9BW6	9/6	DK40	15/6	ECH84	9/6	EY88	8/9	PY88	7/9
1R5	4/–	10C1	8/9	DK92	6/9	ECL80	6/–	EZ40	5/3	PY800	6/–
1S4	5/–	10C2	12/3	DK96	6/3	ECL82	6/3	EZ41	6/–	PY801	6/3
1S5	3/6	10F1	10/–	DL96	5/9	ECL83	9/6	EZ80	3/9	TY86F	11/8
1T4	2/3	10F18	9/9	DM70	5/–	ECL86	8/9	EZ81	4/–	U24	12/6
2D21	5/6	10LD11	9/6	DY86	6/9	EF37A	6/–	HABC80	9/3	U25	8/6
3D6	3/9	10P13	8/3	DY87	8/–	EF40	8/9	KT61	6/9	U26	7/6
3Q4	5/3	10P14	11/6	E80F	24/–	EF41	6/9	KT66	12/3	U191	9/6
3Q5	7/–	12AH8	10/9	E83F	24/–	EF80	3/9	N339	15/–	U282	12/3
3S4	4/6	12AT6	4/6	E88CC	10/–	EF83	9/9	PABC80	6/9	U301	11/3
3V4	5/3	12AU6	5/9	E180F	19/6	EF85	4/6	PC86	10/3	U329	9/–
5Y3	4/9	12AV6	6/6	EABC80	5/6	EF86	6/–	PC88	9/6	U404	6/–
5Z4	7/–	12BA6	5/9	EAC91	3/3	EF89	4/–	PC95	11/8	U801	16/3
6AQ5	5/9	12BE6	4/9	EAF42	7/6	EF91	3/–	PC97	7/3	UABC80	5/–
6AT6	3/9	12BH7	6/–	EB41	4/9	EF92	2/6	PCC84	5/6	UAF42	7/–
6AU6	5/3	19AQ5	7/3	EB91	2/3	EF97	10/–	PCC85	6/9	UBC41	6/3
6AV6	5/6	20D1	10/–	EBC41	6/6	EF98	10/–	PCC88	10/6	UBC81	6/3
6BA6	4/6	20F2	11/6	EBC81	5/9	EF183	7/–	PCC89	7/9	UBF80	5/9
6BE6	4/9	20L1	12/6	EBF80	5/6	EF184	7/–	PCC189	10/6	UBF89	6/9
6BH6	5/3	20P1	12/6	EBF83	7/3	EL33	6/9	PCF80	5/6	UC92	6/3
6BJ6	5/6	20P3	12/–	EBF89	6/3	EL34	8/6	PCF82	6/3	UCC84	8/9
6BQ7A	7/6	20P4	13/6	EBL21	10/6	EL36	8/9	PCF84	8/6	UCC85	5/6
6BR7	8/3	20P5	12/3	EC70	4/9	EL41	7/3	PCF86	7/9	UCF80	8/9
6BR8	8/–	30C15	9/–	EC92	6/6	EL42	7/6	PCL82	6/3	UCH42	7/–
6BW6	6/9	30C18	10/6	ECC40	7/–	EL83	6/9	PCL83	7/9	UCH81	6/6
6CD6G	18/–	30F5	5/9	ECC81	3/6	EL84	4/6	PCL84	7/–	UCL82	7/9
6CH6	5/–	30L15	9/3	ECC82	4/6	EL85	7/6	PCL85	7/6	UCL83	8/6
6F1	9/6	30P4	12/3	ECC83	4/6	EL86	7/3	PCL86	8/9	UF41	6/9
6F13	3/9	30P12	7/6	ECC84	5/6	EL95	5/6	PL36	8/–	UF42	4/9
6J7G	4/6	30P19	12/3	ECC85	5/9	EM34	11/6	PL38	16/–	UF80	6/3
6K7G	1/3	30PL1	8/6	ECC88	8/9	EM71	13/6	PL81	6/9	UF85	6/9
6K8G	3/3	30PL13	9/6	ECC189	11/6	EM80	6/3	PL82	6/3	UF86	9/–
6L1	10/–	35W4	4/9	ECF80	6/–	EM81	7/–	PL83	5/3	UF89	6/–
6L18	10/–	85A2	6/6	ECF82	6/3	EM84	6/9	PL84	5/–	UL41	6/9
6LD20	5/6	5763	7/6	ECF86	11/6	EM85	8/9	PM84	9/3	UL46	8/6
6Q7G	4/–	AZ31	6/6	ECH21	9/–	EM87	7/6	PY33	8/9	UL84	6/–
6V6G	3/9	AZ41	6/6	ECH35	6/3	EY51	5/6	PY80	5/–	UM80	8/3
6X4	3/9	DAF96	5/9	ECH42	7/6	EY83	9/3	PY81	4/9	UY41	4/6
6X5	4/6	DF96	5/9	ECH81	5/9	EY84	9/6	PY82	4/9	UY85	5/–
6/30L2	8/3	DF97	10/–	ECH83	6/6	EY86	5/6	PY83	5/9	X78	20/6

Terms of business: Cash with order or C.O.D. only. Post/packing 6d. per item. Orders over £3 post free. C.O.D. 3/6 extra. All orders despatched same day. Complete catalogue with terms of business 6d. Any parcel insured against damage in transit for 6d. extra. We are open for personal shoppers 8.30–5.30. Saturdays 8.30 a.m.–1 p.m.

TO DESIGNERS & CHIEF ENGINEERS

OSMOR

SPECIALISES IN WINDING MINIATURE COILS, TRANSFORMERS, ETC. OF INTEREST TO BULK MANUFACTURERS IN THE INDUSTRIAL FIELD.

MANUFACTURERS USING UP TO 50 S.W.G. WOULD FIND OUR SERVICE ECONOMICAL AND RELIABLE. ENQUIRIES APPRECIATED.

LARGE CAPACITY AVAILABLE

PLEASE TELEPHONE CRO 5148
FOR SWIFT ACTION

OSMOR RADIO PRODUCTS LTD.
540 PURLEY WAY (PARKING FACILITIES)
(Nr. AIRPORT) CROYDON
CRO 5148/9

SMALL ADVERTISEMENTS

Use this form for your small advertisement

To: **The Advertisement Manager, Data Publications Ltd., 57 Maida Vale, London, W.9**

Please insert the following advertisement in the .... issue of **THE RADIO CONSTRUCTOR**

16 words at 9d.
= 12/-

ALL WORDING IN BLOCK LETTERS PLEASE

I enclose remittance of .... being payment at 9d. a word. MINIMUM 12/-.
Box Number, if required, 2/- extra.

NAME..
ADDRESS ....
....

Copy to be received four weeks prior to publication. Published on the 1st of every month

SMALL ADVERTISEMENTS

continued from page 283

CONVERT ANY TV SET INTO AN OSCILLOSCOPE. Instructions and diagrams, 12s. 6d.—Redmond, 26 St. John's Road, Hove, Sussex.

Radio Constructor **C.C.T.V. CAMERA.** Complete single unit focus/scanning assemblies, L_1, L_2, L_3 (vernier coupled), L_4, L_5, and data for all-mains operation. This kit £12 10s. carriage paid. All units camera tested and guaranteed 12 months. Enquiries s.a.e. Worland Electronic, 16 Woollett Street, London, E.14. Telephone: EASt 4837.

FOR SALE. Large amounts of aluminium sheet, tube and rod to be disposed of quickly. Send us your requirements and we will quote without obligation. Save ££££'s.—Slater Metals (Non-Ferrous) Ltd., Non-Ferrous Metal Wholesalers, 17 Slater Street, Liverpool 1.

OFFERS for Philips 3-speed playing deck with auto change and 5 watt amplifier.—Box No. F216.

FOR SALE. Heathkit 2¾in oscilloscope. Ready built, positively unused. Full guarantee. £22.—Lewis, Banc-y-Llan, Whitland, Carms.

FOR SALE. Quantity of new accumulators. Willard Radio-20-2, 2 volt. Size: 5in high x 3½in x 2½in., 5s. each plus carriage.—Box No. F224.

FOR SALE. New grey cabinet, length 12in, height 7in, back to front 7in, £2 post paid. Black crackle cabinet, length 16½in, height 7¾in, back to front 7¾in, £1 post paid. Crystal mic. in G.P.O. type desk stand, 15s. post paid.—Box No. F225.

VALVES. 6J6, EB91 at 1s. 6d. 12AT7, CV51 at 2s. DAF91, 6AT6 at 3s. 6d. 5Y3GT, DL92, EF92, EL91, U14, 801A at 5s. 5R4GY, 6B4, 807, 6BR7, EF40, VT136 at 7s. 6d. KT66, RG1240A, 5B254M, 830B, T20 at 10s.—Box No. F226.

INTERESTED IN AMATEUR RADIO TELEPRINTING? Then join the British Amateur Radio Teleprinter Group. Details from Hon. Sec., G2UK, East Keal, Romany Road, Oulton Broad, Suffolk.

JOIN THE INTERNATIONAL S.W. LEAGUE. Free Services to members including Q.S.L. Bureau. Amateur and Broadcast Translation. Technical and Identification Dept.—both Broadcast and Fixed Stations, DX Certificates, contests and activities for the SWL and transmitting members. Monthly magazine, *Monitor*, containing articles of general interest to Broadcast and Amateur SWLs, Transmitter Section and League affairs, etc. League supplies such as badges, headed notepaper and envelopes. QSL cards, etc., are available at reasonable cost. Send for League particulars. Membership including monthly magazine, etc., 21s. per annum.—Secretary, ISWL, 12 Gladwell Road, London, N.8.

continued on page 287

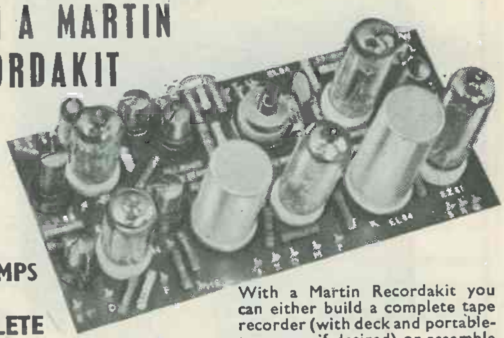

UNDERSTANDING TELEVISION

by

J. R. Davies

512 pages **299 diagrams** **37/6**

UNDERSTANDING TELEVISION deals with the principles of 625 line reception as fully as 405 line reception, and explains in detail: the nature of the television signal; the cathode ray tube; receiver tuner units; receiver i.f. amplifiers; a.f. and video amplifiers; vertical and horizontal timebases; deflector coil assemblies; synchronising; automatic gain and contrast control; power supplies and receiver aerials. There is also a very comprehensive section dealing with present-day colour television.

The reader is required to have only a basic knowledge of elementary radio principles. The treatment is non-mathematical throughout, and there is no necessity for any previous experience in television whatsoever. At the same time, UNDERSTANDING TELEVISION is of equal value to the established engineer because of the very extensive range it covers and the factual information it provides.

Some Recent Reviews

"An extremely well written book which will be useful to anybody who wishes to gain or consolidate knowledge on the practical aspects of television . . ."—*British Communications & Electronics.*

"The text is well written, the diagrams well drawn and to the point, and the printing is good. Apprentices and all service engineers who wish to obtain a greater grasp of this subject will find this book very useful. . . ."—*Radio & Electrical Retailing.*

"The author goes very fully into the circuitry and theory of receiver design, and his technical explanations are easy to understand. . . ."—*Wireless & Electrical Trader.*

"The treatment is entirely non-mathematical and should be well suited to anyone who has a reasonable knowledge of radio theory. The text is profusely illustrated with diagrams and explanatory captions succinctly hammer home the relevant points—a valuable supplementary to the main text. . . ."

—*Practical Television.*

To Data Publications Ltd., 57 Maida Vale, London, W9

Please supply.............................copy(ies) of your latest publication "Understanding Television", Data Book No. 17. Price 37/6. Postage 2/–.

NAME..

ADDRESS ....

....

....

SMALL ADVERTISEMENTS

continued from page 285

THE INTERNATIONAL HAM HOP CLUB is a non-profit-making organisation open to RADIO AMATEURS AND SHORT WAVE LISTENERS. OBJECT: to improve international relationships through an organised system of hospitality. MEMBERS offer overnight hospitality to visiting members, subscription 10s. per annum. ASSOCIATE MEMBERS invite radio amateurs to visit their stations. Associate membership 5s. per annum. FAMILY EXCHANGE holidays arranged, also FRIENDSHIP LINKS between radio clubs. The Club's official journal is free to both Full and Associate Members.—Hon. Gen. Secretary: G. A. Partridge, G3CED, 17 Ethel Road, Broadstairs, Kent.

R.T.T.Y. TELEPRINTER SCOOP. 43 type 7B page printers for sale. S.A.E. for details and price. Also 2 wavemeter/signal generators 140/255 Mc/s. Xtal check, with instruction manual and mains P/U, £2 10s. each. TF517 signal generator, 10/300 Mc/s, £3 10s. 25 watt c.w. transmitter, Geloso v.f.o., mains P/U, 80/10 metres, £10. 28 volt 150 amp d.c. P/U smoothed and regulated, £10.—G3LMR, 112 Groby Road, Glenfield, Leicester.

HI-FI ENTHUSIASTS—Come to one of the Opera Workshop performances of *The Marriage of Figaro*, Mozart, at the Technical College, East Ham, London, E.6, 11th to 14th November inclusive. Musical director, Arthur Hamling. Tickets 7s. 6d., 5s. and 3s. from the Academy of Music, Wakefield Street, London, E.6.

AERIAL MATCHING TUNING UNITS
Latest American release bulk purchase of 3,000
These well made tuning units, made for the American 19. T.X.-R.X. are housed in a metal case size 4" x 4" x 10", using a large precision calibrated scale, are an essential piece of equipment for the serious T.X. or R.X. operator. This unit will match an untuned wire or whip aerial to almost any short wave receiver or transmitter, exceptionally good for mobile Top Band use. This American version being well noted as far superior to any other. GUARANTEED BRAND NEW **only 20/–**, post 7/6. Instructions supplied.

PYE OR INVICTA LOUDSPEAKER UNITS
Enclosed in a brown wooden cabinet with carrying handle, using a silver speaker mesh. Complete with 40ft. of lead and Jack Plug. A 10" heavy duty 3 ohms speaker is used, being very useful for Groups, Halls, P.A. work, etc. (made for Army entertainment use). **BRAND NEW & BOXED ONLY £2.15.0**, carr. 5/–. A fraction of cost.

88 T.X.-R.X. POWER UNIT
12V input to 90V, 7.5V, 1.4V stabilised output. Also contains L.F. amplifier. These are sold BRAND NEW with 4 B.7.G. valves **only 50/–**. P.P. 5/–.

J. T. SUPPLY, (Dept. F)
38 MEADOW LANE, LEEDS 11

Get this
AIR DRYING
Hammer Grey
for a
SUPERB FINISH...THE PUSHBUTTON WAY!

YUKAN Aerosol spraykit contains 16 oz. fine quality durable easy instant spray. No stove baking required. Available in Grey Hammer. **14/11** at our counter or **15/11** carr. pd., per pushbutton selfspray can. **SPECIAL OFFER:** 1 Can plus optional transferable snap on trigger handle (value 5/–) for **18/11** carr. pd. Please enclose cheque or P.O. for total amount to: **YUKAN 307a Edgware Road, London, W.2.** *(Closed Thurs. afternoons. Open all day Sat. Annual Holidays:- Closing Dec. 10th to Jan. 1st).*
Choice of 13 selfspray enamel plain colours (Motor Car Quality) and primer also available.

20 SUGGESTED CIRCUITS
by G. A. FRENCH

No. 15 in our Data Book Series. This book contains the first 20 circuits to be published in the very popular series of the same name appearing in *The Radio Constructor*.
The contents include: simple and inexpensive two-valve capacity bridge, short wave regeneration preselector, one-valve speech operated switching circuit, transformer ratio analyser, series noise limiter, receiver remote mains on-off control, and many others; covering subjects ranging from electronic laboratory equipment to a simple 2-Stage Gram Amplifier.

PRICE **3s. 6d.** Postage 4d. 48 pages.

Available from your usual supplier, or direct from
DATA PUBLICATIONS LTD
57 Maida Vale London W9

TESTED TRANSISTORS

1/– each	Red or White Spots. OA81, OA202.
2/– each	XA101, XA102, XA111, XA112, XB103, NKT122, OA90, OC430.
3/– each	OC44, OC45, OC81, OC81D, OC200, GET16.
4/– each	AF114, AF115, AF117, OC170, OC171, SX658, XV611.
5/– each	OC72, OC139, OC140, OC204, GET8, ORP60, BY100.
10/– each	OC35, OC26, OC28, AFY19, 2S013, ORP12, GET571.

ZENER DIODES 4.7 volt to 33 volt ½ watt, 3/6 each, 1.5 watt, 5/– each, 7 watt, 6/– each.

Send 3d. stamp for Full Price List, and Free Equivalent Chart

B. W. CURSONS
78 BROAD STREET, CANTERBURY, KENT

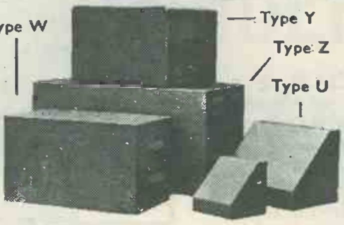
Type W
Type Y
Type Z
Type U

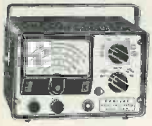

VALVE VOLTMETER

AC/DC (+ and —) Resistance.
AC/RMS and PK/PK.

Detailed leaflet on request.

★ AC RMS and DC Voltage 0/1½/5/15/50/150/500/1,500 volts. DC IMP. 11 meg. A.C SENS 7.33 meg/volt.
★ AC PK to PK 0/4.2/14/42/140/420/1,400/4,200 volts.
★ Resistance from 0.2 ohm to 1,000 Meg. 7 Ranges. Large meter, AC/DC Probe, DC to 4 Mc/s, High Stability and Accuracy. Size 7¼" x 4¾" x 5". Mains operated. Fully guaranteed.
Price **£13.19.6.** P.P. 2/6
(*Probe to extend to 100 Mc/s,* **40/–** *extra*)

BUILD A QUALITY TAPE RECORDER

★ Pre-Built Equipment—6 Valves—Collaro Studio Decks—Portable Cabinets with 8" x 5" Speakers

TWO TRACK Total Cost **£26**
P.P. 8/6

OR Deck **10 gns.** P.P. 5/–; Amplifier **11 gns.** P.P. 3/6. Cabinet with Speaker **5 gns.** P.P. 3/6.

FOUR TRACK Total Cost **£30**
P.P. 8/6

OR Deck **£13.19.6.** P.P. 5/–; Amplifier **12 gns.** P.P. 5/6. And Cabinet with Speaker **5 gns.** P.P. 3/6.
All complete in every detail. Illustrated leaflets on request. Ideal for portable or domestic equipment.

GARRARD 2-TRACK BATTERY TAPE DECK

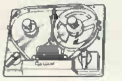

9V operated, 2 track, 2 speed. Brand new, fitted heads, etc. Supplied complete with cassette. Brand New. New Low Price **£10.10.0.** P.P. 3/6.

FM VHF TUNING HEART

Printed circuit construction, fully tunable 85 to 105 Mc/s. Completely screened. Requires UCC85 **(8/6)**, R.F. stage and osc./mixer stage. With circuit.
Brand new in maker's cartons **15/–**. P.P. 1/–

TRANSISTOR SUPERHET TUNER

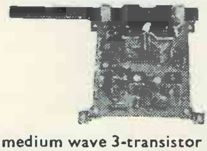

4½ volt medium wave 3-transistor and diode superhet radio tuner. Ideal for all amplifiers. Price with circuit **67/6.** P.P. 1/6.
Also mW/sW 4-transistor **£7.9.6.**

TRANSISTORS, CRYSTALS, VALVES AND COMPONENTS

THE LARGEST RANGE OF THE ABOVE ITEMS IN THE COUNTRY

We stock far too many types to list here. See our Catalogue for full range
★ **New 8-page Transistor, Rectifier, Valve and Quartz Crystal List Free on request**
LET US QUOTE FOR PARTS FOR YOU
RETURN OF POST SERVICE

A SELECTION FROM OUR STOCKS

See Catalogue for full details

● Sinclair Micro-6 (to build)	59/6
● Sinclair TR750 Amplifier (to build)...	39/6
● Sinclair Micro Injector (to build) ...	27/6
● Sinclair X10 Amplifier Kit	119/6
● Sinclair X10 Amplifier Built... ...	139/6
Tape Jack Tuner (Full Med. Wave) ...	29/6
10-Watt Horn Tweeter	27/6
20-Watt Super Tweeter	69/6
Two-channel Mixer for Mics/Pu's ...	15/–
1 to 200 Mc/s Field/str. Meter ...	59/6
5-hole Chassis Punch Kit	49/6
Headphones 2kΩ **12/6**; 4kΩ	14/6
Stereo Stethoscope Headset, 8+8 arm	25/–
Resistor Substitution Box	32/6
Crystal Mono Stethoscope Headset ...	10/6
Magnetic Mono Stethoscope Headset...	12/6
Transistor Signal Injector	35/–
Fully Disappearing Car Aerial	35/–
Test Lead Kit with Pouch	8/6
Capacitor Substitution Box	22/6
De Luxe Stereo Headsets with junction box	£6
PP3 9V Batt. Eliminator	18/6
Transistor Telephone Amplifier ...	59/6
8+8Ω Stereo Headphones	62/6
Crystal Contact Microphone	12/6
MCI Crystal Mic. Insert	5/–
Earphones, Crystal or Magnetic ... Complete with Jack and Socket.	5/–
Telephone Recording Attachment ...	9/6
50–0–50μA Edgewise Meter	25/–
6/12V Min. 212w Relay	12/6
Transistor Coil Set With Tuner, Ferrite Aerial and Circuit	20/–
Complete Test Lead Kit	8/6
30W Pocket Mains Solder Iron ...	14/6
8" Hi-Fi 15/16 ohm Speaker	69/6
100 kc/s Quartz Crystal	15/–
Twin Crystal 1 Mc/s and 100 kc/s ...	22/6

RECORD/REPLAY/ERASE TAPE HEADS

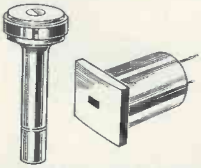

Marriot Type R/RP/3 ½ track record-replay head and Mullard type TS erase head with mounting post. Ideal for transistor circuits. Bargain Offer, **15/– Pair.** P.P. 1/–
★ **700Ω IMPEDANCE** ★

CRYSTAL MICROPHONES

(See Catalogue for details and for Dynamic Mics)

Acos 39-1 Stick Microphone ...	32/6
Acos 40 Desk Microphone ...	15/–
Acos 45 Hand Microphone ...	19/6
Lapel/Hand Microphone ...	12/6
Acos Stick Microphone ...	15/–
100C Stick with Stand ...	32/6
BM3 Stick with Stand	49/6
Lapel/Hand Magnetic	8/6
MM71 2k Mag. Mic	12/6
MC70 Studio Mic	42/–

Trade and Export Enquiries Invited

NOMBREX TEST EQUIPMENT

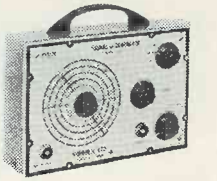

LEAFLETS ON REQUEST

FULLY GUARANTEED

All transistor portable units supplied with full instructions.

★ 150 kc/s to 350 Mc/s generator. RF Mod., AF, 8 ranges. Leads, batt., instructions, **£9.10.0.**
★ Resistance/Capacitance Bridge, **£8.5.0.**
★ Transistorised Power Supply, **£6.10.0.**
★ Audio Generator, **£16.15.0.**
★ Inductance Bridge, **£18.**

TRANSISTOR PORTABLE WALKIE-TALKIES

9-Transistor Portable Trans-receivers. Supplied complete with leather cases, batteries, aerials, etc., in presentation case. Range up to 5 miles in favourable conditions. Sizes 6½" x 3" x 1½". Superhet crystal controlled on transmit and receive.
Price **£21** per pair. P.P. 3/6

★ **DUAL IMPEDANCE** (50 ohm-50k ohm) dynamic professional quality microphone. Size 7¼" long x 1⅞" diam. 40 c/s to 15 kc/s.
Price **82/6.**
P.P. 2/6

POCKET RADIOS

All complete with battery, earphone, carry case and fully guaranteed. 6 and 7 transistor superhet designs.

★ 6-Transistor Med. Wave, **69/6.** P.P. 2/–
★ 7-Transistor Med. Wave, **79/6.** P.P. 2/–
★ 6-Transistor Med./Long Wave, **5 gns.** P.P. 2/6
★ 7-Transistor MW/LW/SW, **£12.** P.P. 3/6

MAINS AND BATTERY RECORD DECKS

ALL COMPLETE with ARM and CARTRIDGE

★ BSR UA14 4-speed	£5.19.6
★ BSR UA15 4-speed	£6.19.6
★ Garrard Autoslim 4-speed ...	£6.10.0
★ Unplugable Head Version ...	£6.19.6
★ Stereo Version	£7.19.6
★ 6–9 volt version	£8.19.6
★ SRP10 4-speed or BSRGU7...	£5. 0.0
★ Garrard AT6 with Stereo Cartridge, 4-speed	£10.19.6
★ AT6 with Mono Head ...	£10.10.0
P. & P. 3/6 any type above	
★ AT6 with EV26 or Sonotone	£11.19.6
★ 9V Star, 45 r.p.m.	£1.19.6
★ 45 and 33 r.p.m. Star, 9V ...	£4.12.6
★ 45 r.p.m. Garrard 6V ...	£1.15.0
★ 4-speed B.S.R., 9V or S.R.P.10 9V	£5. 5.0
P. & P. 2/6 any of above	

HENRY'S RADIO LTD

303 EDGWARE ROAD LONDON W2
PADdington 1008/9
Open Monday to Sat. 9–6. Thurs. 1 o'clock
PLEASE TURN TO BACK PAGE

FIRST AND BEST PROVED & TESTED DESIGNS, QUALITY COMPONENTS & UNITS

● TRANSISTOR HI-FI AMPLIFIERS

MONO or STEREO | **10 WATTS and 20 WATTS**

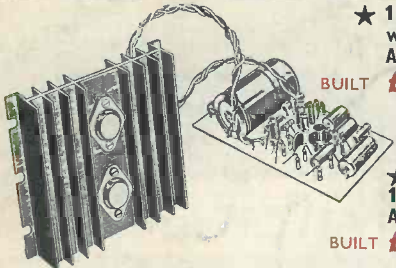

★ **15 to 16 ohm 10 watt Power Amplifier**
BUILT **£5-19-6** P.P. 2/6
(KIT **£5-10-0** P.P. 2/6)

★ **3 to 4 ohm 10 watt Power Amplifier**
BUILT **£5-10-0** P.P. 2/6

★ MAINS UNITS **59/6** for one amplifier. (KIT **99/6** P.P. 2/6) or **69/6** to power 2 amplifiers.

● PRE-AMPLIFIERS

★ Mono full function pre-amplifier with 8 input positions. Low noise, high quality and sensitivity. Gives 10 watts with one power amplifier or 20 watts with two amplifiers. Size: 9" x 2½" x 2".

BUILT **£5-10-0** P.P. 2/-
(KIT **99/6** P.P. 2/-)

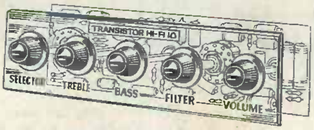

★ FRONT PANEL PLATE 8/6

● STEREO PRE-AMPLIFIER

Two Channel version of above For use with two power amplifiers for 10+10 watts. Size: 9" x 3¼" x 1⅝".

PRICE BUILT **£10-19-6** P.P. 3/6

★ Dark Brown with Gold Front Panel 12/6.

● MULTI-INPUT PRE-AMPLIFIER

Simplified pre-amplifier for use with one or two power amplifiers, 8 inputs.

PRICE BUILT **65/-** P.P. 1/6

★ Front Panel Plate 6/6.

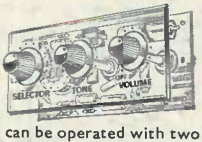

All the above pre-amplifiers can be used with any valve or transistor power amplifier requiring 250mV for full output. They can be operated with two 9 volt batteries in series or from the power amplifiers. High gain, low distortion, excellent quality designs, combined with value for money

CIRCUITS AND DETAILS ON REQUEST

Demonstrations of above equipment and VHF FM Tuner can be heard during normal shop hours. All units are fully guaranteed.

NEW ! TWO NEW PACKAGED TRANSISTOR QUALITY AMPLIFIERS

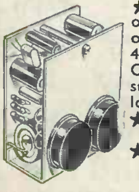

1½ watt and 4 watt

★ 6-Transistor printed circuit designs. Push-pull output for 3 to 5 ohm speakers. Can be battery operated. 6mV into 1 kΩ sensitivity. Response 40 c/s to 12 kc/s.

Can be used with above pre-amplifiers for mono or stereo in any amplification requiring a low distortion low cost amplifier. Overall sizes: 2½" x 2" x 1¼".

★ 4 watt version operates from 12 to 18 volts. PRICE BUILT **79/6** P.P. 1/6

★ 1½ watt version from 9 to 12 volts. PRICE BUILT **65/-** P.P. 1/6

★ CIRCUITS AND DETAILS ON REQUEST ★

All Transistor Car Radio NEW !

★ **ONE HOUR TO BUILD WITH FACTORY ASSEMBLED CHASSIS AND PANELS**

6-transistor 3 diode Med. and Long Wave Superhet Design. Features double tuned IFT's, AVC. Permeability tuning with geared drive, push-pull car filling volume. Full tuning of both wavebands. A high sensitivity design on printed circuits to fit any type of vehicle. 12 volt positive earth only. All parts available separately. After sales service and guarantee.

THE "ROADSTER"
★ Total Cost to Build
£8-19-6 P.P. 3/6

★7 x 4 inch. hi-flux speaker with baffle and car fixing kit 20/-.

★ Circuit and details on request.

VHF TRANSISTOR HI-FI FM TUNER

★ **HIGH STABILITY — HIGH SENSITIVITY** ★

Features 5-Mullard transistors with 4 diodes, compact printed circuit, high gain, low distortion, superhet design. Full tuning from 87/105 Mc/s with geared tuning. AVC and AFC. 9 volt 9mA operation. 50dB S/N. Output up to 1 volt audio. Easy to build and align. Overall size in cabinet 3½" x 2¼" x 4". All parts sold separately and guaranteed.

AFTER SALES SERVICE
★ CIRCUIT AND DETAILS ON REQUEST

Total Cost with Front Panel
£7-19-6 P.P. 2/6
(Cabinet Assembly 20/- extra)

"CONVAIR" PUSH BUTTON PORTABLE CAR RADIO

★ **UNBEATABLE FOR PERFORMANCE AND DESIGN** ★

Printed circuit 6-Transistor 2-Diode superhet radio with full tuning on medium and long wavebands. Push-pull output up to 1 watt. Attractive portable cabinet, size 10" x 7" x 3½" with horizontal slow motion tuning dial and push button wave change. Easy to build with superb performance. All parts sold separately. After Sales Service and Guarantee.

★ CIRCUIT AND DETAILS ON REQUEST

★ **Total Cost of All Parts**
£7-19-6 P.P. 3/6
(Batteries 6/- extra)

★ **The Finest Portable Available**

A CHANNEL TRANSISTOR MIXER UNIT

Inputs suitable for microphones, pick-ups, tuners, guitars, etc., etc. Self-contained battery. Housed in attractive gold-finish cabinet. To feed valve or transistor amplifiers.

PRICE **49/6** P.P. 1/6

MULTI-METERS

BRAND NEW FULLY GUARANTEED

PT34	1kΩ/volt sensitivity	...	39/6
CABYMI	2kΩ/volt sensitivity	...	49/6
THL33	2kΩ/volt sensitivity (Illustrated)	...	75/-
EP10K	10kΩ/volt sensitivity	...	79/6
IT12	20kΩ/volt sensitivity	...	82/6
TP5S	20kΩ/volt sensitivity	...	£5.19.6
500	30kΩ/volt sensitivity	...	£8.19.6
EP30K	30kΩ/volt sensitivity	...	£5.10.0
EP50K	50kΩ/volt sensitivity	...	£8.10.0
EP100K	100kΩ/volt sensitivity	...	£9.19.6

POST AND PACKING 2/- ANY MODEL

Sinclair Radionic, TSL and Martin Audio kits. All Transistor Equipment kits and built available from stock as advertised.

We can supply from stock most of the components and items specified on circuits published in this and other magazines. Quality parts at realistic prices Let us quote for your circuit.

300 TRANSISTORS TYPE DIODES AND RECTIFIERS
800 VALVES AND TUBES
500 QUARTZ CRYSTALS

LATEST CATALOGUE
86 PAGES, 10" x 7½"
New 8-page valve, transistor and crystal supplement free on request.
Fully detailed and illustrated.
Price 2/6 post paid.

HENRY'S RADIO LTD.,

303 EDGWARE ROAD LONDON W2
PADdington 1008/9
Open Mon to Sat. 9–6. Thurs. 1 p.m.