PRACTICAL

NOVEMBER 1988 · £1.25

ELECTRONICS

SCIENCE & TECHNOLOGY

BUILD A DUAL BEAM OSCILLOSCOPE

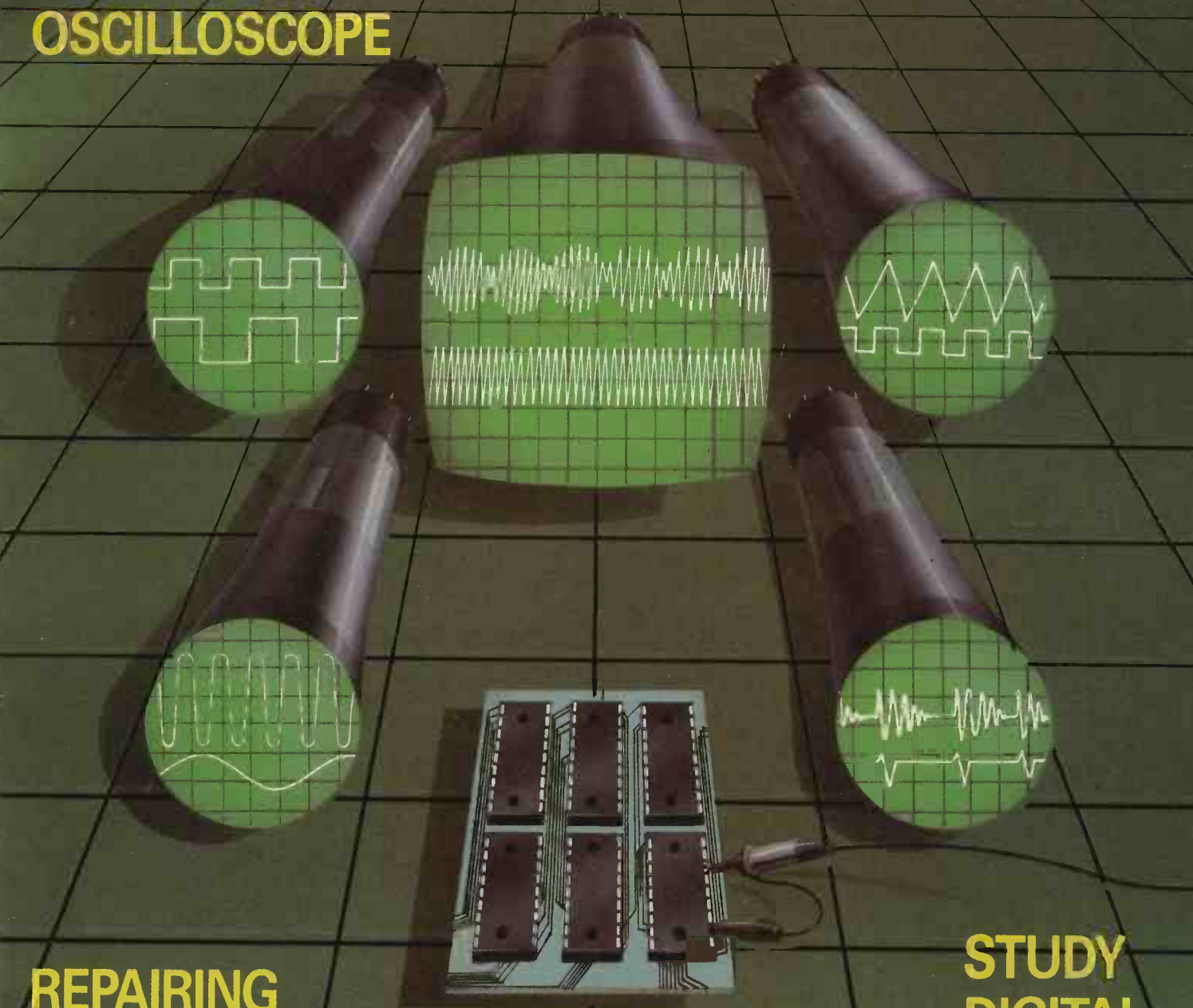

REPAIRING HI-TECH SMT EQUIPMENT

STUDY DIGITAL LOGIC

THE SCIENCE MAGAZINE FOR SERIOUS ELECTRONICS AND COMPUTER ENTHUSIASTS

REALISTIC®

PROGRAMMABLE SCANNING RECEIVERS

THE BEST CHOICE FOR YOUR HOME OR CAR

A **Realistic PRO-2004.** The ultimate in today's solid-state high-technology scanners! Delivers a wide range of frequencies not found on most scanners. Search mode finds new channels, selectable scan and search speeds, two-second scan delay. Lock-out key for temporarily bypassing channels. Squelch control and priority function. Continues tuning from 25-520 MHz and 760-1300 MHz. 300 channels for storing frequencies. Large LCD channel/frequency display with electroluminescent back lighting, built-in speaker, telescoping aerial. Jacks for external aerial, headphone, external speaker, tape record and DC power supply. Measures: $2^{3}/_{16}$ x $10^{11}/_{16}$ x $8^{11}/_{16}$". Mains operation (or 13.8 VDC neg. gnd. power cord, extra). Memory back-up requires 9v battery. **20-9119** **£329.95**

B **Realistic PRO-2021.** Features direct keyboard entry, search and scan in two speeds and two-second scan delay. Priority function will automatically switch to the priority channel when a call is received on it and individual lock-outs for temporarily bypassing channels. Scan up to 200 channels In these bands: VHF Lo 68-88 MHz, VHF AIR 108-136 Mhz, VHF Hi 138-174 MHz, UHF Lo 380-470 MHz and UHF Hi 470-512 MHz. Easy-to-read LCD channel/frequency display with electroluminescent back-lighting, squelch control and built-in speaker, telescoping aerial. Jacks for external speaker, external aerial, tape recorder and DC power supply. Size: $3^{1}/_{8}$ x $10^{1}/_{4}$ x 8". Includes mounting bracket for mobile use and DC power cord. Mains operation (or 13.8 VDC neg. gnd.). Memory back-up requires 9v battery. **20-9113** **£199.95**

Tandy®

Over 400 Stores And Dealers Nationwide

Prices may vary at Dealers. Offers subject to availability.

Tandy, Tandy Centre, Leamore Lane, Bloxwich, Walsall, West Midlands. WS2 7PS

PRACTICAL ELECTRONICS

PE VOL 24 NO 11 NOVEMBER 1988

CONSTRUCTIONAL PROJECTS

DUAL BEAM OSCILLOSCOPE by John Becker 12
Tracing the route to getting the tube home and facing up to electronics with a doubly beaming smile.

DIGITAL ELECTRONICS – PART THREE by Owen Bishop 35
Multivibrators don't need springs or motors if you know how to logically open and close the astable gate before the force has gone.

PLD PROGRAMMER by Chris Kelly & Steve Pattinson 49
Programming your own logic devices minimises design time and board space – building your own programmer saves pounds by the hundred.

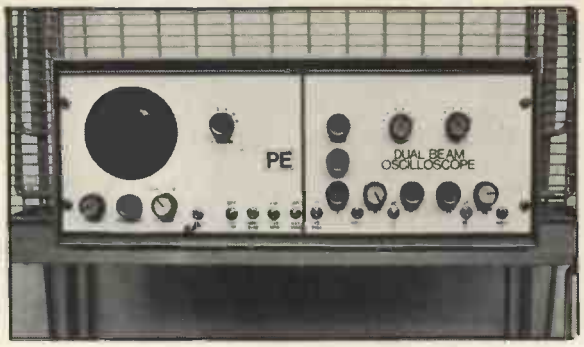

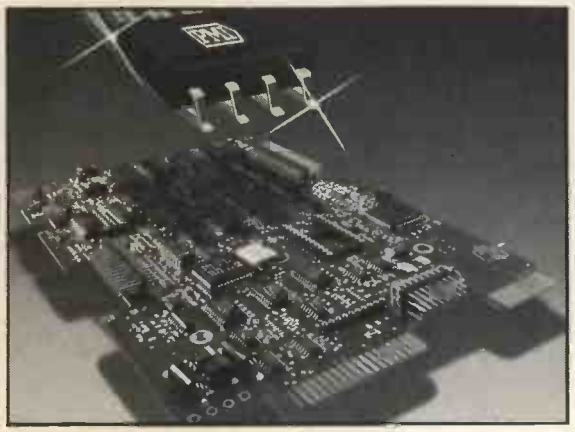

SPECIAL FEATURES

SUBMARINE CABLES – PART TWO by Mike Sanders 19
Tats and Cantats, Anzcan and Se-Me-We, names to conjure with when Seadogs trench the oceans for coaxing optical telecoms.

SMT AND DIY by Fred Thorns 27
Join the growing band of diy initiates on the wings of a gull and learn about handling surface mounted component maintenance.

SEMICONDUCTORS – PART ELEVEN by Andrew Armstrong 42
CMOS 4000 completes the circuits that other chips cannot reach.

REGULAR FEATURES

EDITORIAL by John Becker – dominating Britain 9
LEADING EDGE by Barry Fox – operational war games 8
SPACEWATCH by Dr. Patrick Moore – supernova light echoes 46
INDUSTRY NOTEBOOK by Tom Ivall – the listening machine 57
READERS' LETTERS – and a few answers 30

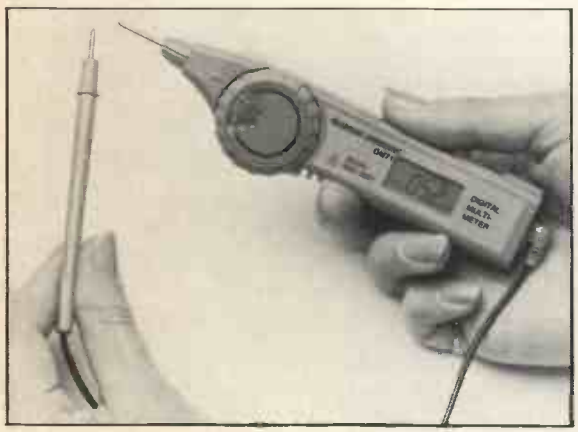

PRODUCT FEATURES

MARKETPLACE – what's new, where and when 4
ARMCHAIR BOOKSHOP – have you browsed our good book list? . 54
PCB SERVICE – professional PCBs for PE projects 60
TRACK CENTRE – the PCB track layout page 61
BAZAAR – Readers' FREE advertising service 53
ADVERTISERS' INDEX 62

NEXT MONTH . . .

WE'VE LAYED DOWN THE RIGHT TRACK MIX FOR –

A TEN-INPUT PANNING MIXER ★ RAILWAY SIGNALLING ELECTRONICS ★ DIGITAL MULTIMETERS ★ PLUS LOTS MORE IN OUR SERIALISED FEATURES ★ AND THERE'S A FREE CMOS 4000 SERIES DATA CARD!

DON'T MISS YOUR PIN-OUT PIN-UP
IN OUR DECEMBER ISSUE
ON SALE FROM FRIDAY NOVEMBER 4th

THE SCIENCE MAGAZINE FOR SERIOUS ELECTRONICS ENTHUSIASTS

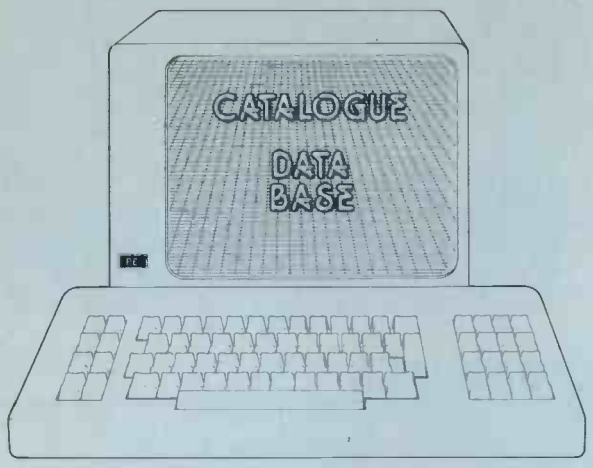

We have recently received the following literature:

Schlumberger have issued a comprehensive 22-page brochure on their new SI-1220 multichannel spectrum analyser. The instrument offers **exciting new measurement opportunities** in speech and music research, environmental and structural engineering etc. They have also sent an illustrated brochure on their 7061 and 7062 systems voltmeters for high speed precision measurement. **Schlumberger-Solartron,** Victoria Road, Farnborough, Hants, GU14 7PW, tel 0252 544433.

Klippon have produced a new full colour catalogue on their **extensive range of high-quality tools** for cable cutting, stripping, crimping, terminating and testing. **Klippon,** Power Station Road, Sheerness, Kent, ME12 3AB, tel 0795 580999.

Hitachi have a 16-page brochure available on their **range of cmos and bicmos gate arrays.** It also discusses the major issues involved in gate array selection and use. **Hitachi Europe Ltd,** 21 Upton Road, Watford, Herts, WD1 7TB, tel 0923 246488.

Bruel and Kjaer have sent an informative brochure describing the company's type 2231 modular **precision sound level meter.** The leaflet defines the many application areas for this versatile instrument in an easily understood format. **Bruel and Kjaer (UK) Ltd,** 92 Uxbridge Road, Harrow, Middx, HA3 6BZ, tel 01-954 2366.

STC Electronic Services have sent information about their new 7-page full-colour product selection guide for their **entire range of PMI opamps** and conversion times. Information is provided on various opamps including low offset voltage, low power, low bias current, low noise, high slew rate, wide bandwidth, 8-pin dual, 14-pin quad, plus 14 and 16-pin dual types. A-D and d-a products are also covered. The Integrated Circuits Group, **STC Electronic Services,** Edinburgh, Harlow, Essex, CM20 2DF, tel 0279 626777.

Global Specialities have produced their most comprehensive catalogue ever available. The booklet is entitled 'The Album' and features the **company's full range of products, including oscilloscopes,** signal sources, psus, safety testers, logic analysers, plus voltage and wattage meters etc. **Global Specialities,** 2-10 St John's Street, Bedford, MK42 0DH, tel 0234 217856.

Penfriend

Master Heat Tools have added a new pen size pocket unit to their range of butane powered three-in-one heat tools.

The model UT-50 is a truly portable soldering iron, heat shrink tool with flameless heat and butane torch. Powered by ordinary lighter fuel it can be carried in "pen clip" style for instant soldering or heating wherever necessary. What you might call the write approach to soldering.

For further details contact: Master Heat Tools, Unit M, Portway Industrial Estate, Andover SP10 3LU, Hants, England. Tel: 0264 51347/8.

WHAT'S NEW

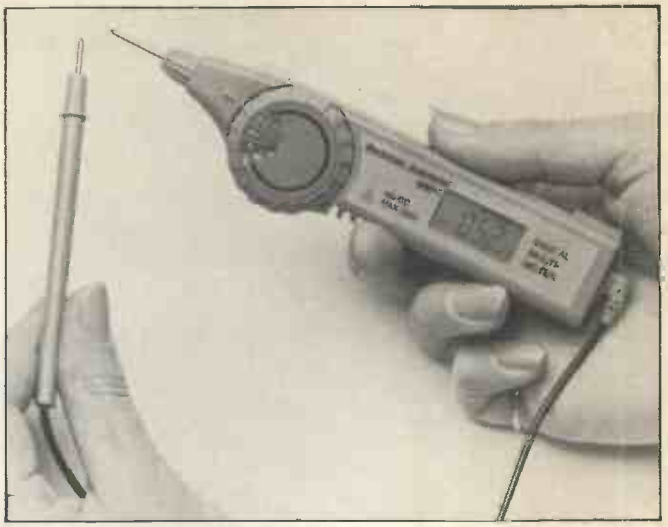

Fingertip DMM

A highly portable pen-type autoranging digital multimeter with 17 ranges/functions is the most recent addition to the Circuitmate series of handheld instruments from Beckman Industrial. Using dual slope integration, the DM71 measures dc and ac voltages, resistance, and includes a continuity and diode test function.

Incorporating a rotary function selector, a touch hold function which freezes the display and an audible indication of continuity and range changing makes the meter ideal for use in difficult situtations where close attention is required to taking measurements.

The 3½ digit lcd display indicates value, polarity, measurement unit, overrange, data hold and low battery. The dc voltages measured are in five ranges between 200mV and 250V with accuracies between ±0.7% plus four digits and ±2% plus four digits, dependent on range. The four ac voltage ranges are between 2V and 250V and have an accuracy of ±2.3% plus four digits.

Resistance has six ranges with 20M the maximum, an accuracy of ±2% plus four digits on all but the highest range, and an open circuit-voltage of less than 0.45V. The continuity/diode test has a threshold level of 1.5KΩ at 1.5V battery level. Input impedence is 100MΩ on the 200mV range, around 12MΩ on the 2V range and about 11MΩ on all other ranges.

The DM71 is supplied complete with batteries, test leads, operators manual and a rigid plastic shirt pocket carrying case. A padded vinyl carrying case is available as an accessory.

Contact: Beckman Industrial Ltd., 43-48 New Street, Birmingham B2 4LJ. Tel: 021-643 8899.

Metering percentages

For the truly addicted enthusiast, as well as for professionals, there is a new higher accuracy version of Thurlby's industry standard 1503 multimeter, which features a basic dc voltage accuracy of 0.03%.

The 1503HA has full multimeter functions of dc and ac voltage and resistance, together with the added advantage of a frequency measurement range. This measures frequency up to 4MHz with a resolution of 0.1 kHz (up to 7MHz with display overlfow) and an accuracy of 0.005%.

A scale length of 4¾ digits (15 bits/32768 counts) gives the 1503HA much greater resolutions, typically of 10μV, 10mΩ and 1nA.

Use of a crisp liquid crystal display with low power circuitry gives a long battery life, though the meter can also be powered from the standard ac line adaptor. Optionally, it can be factory-fitted with an internal mains unit or a rechargeable battery pack.

The meter comes in a tough, knock-proof and scuff-proof case with a multiangle tilt stand that doubles as a carrying handle. It weighs 1.2kg, and costs £185.

Contact: Thurlby Electronics Ltd., New Road, St. Ives, Huntingdon, Cambs. PE17 4BG. Tel: 0480 63570

Piezo house

STC Mercator has introduced a new range of high quality piezo audio transducers. The low-cost devices can be directly driven by ics or lsi circuits and feature a no-contact design which provides a very reliable piezo-electric element whilst eliminating noise problems.

Other features, such as lower power consumption, a slim light-weight construction, and the facility to create a variety of tones makes the range suitable for several applications including telephone handsets (tone ringer, receivers, transmitters) as well as other telecommunications equipment; electronic medical systems; office equipment; detector/alarm facilities; plus various domestic and consumer products.

For further details, contact: Malcolm Green, STC Mercator, South Denes, Great Yarmouth, Norfolk NR30 3PX. Tel: 0493 844911.

VME backplanes

BICC VERO have released the new J1 Series Enhanced VME (an ICL proprietory operating system) backplanes for on-board or off-board termination.

Several unique features have been designed-in including facilities for connecting of de-coupling capacitors at each daughter board – allowing users to individually 'tune' their own configuration of products.

In addition, to improve under-shoot/overshoot values Schottky diodes have been added to the critical on-board terminators, and the design of the board itself enables three alternative power connections to be made using a single standard layout.

The on-board termination system is a multilayer pth backplane which conforms to the VME specification Rev B. It offers pick-up positions of ac fail and systems fail, as well as system reset, and comes fully loaded with wire-wrap tail, press-fit DIN 41612 connectors, and a mating male power connector.

For further details, contact: The Enclosure Group, STC Electronic Services, Edinburgh Way, Harlow, Essex CM20 2DF. Tel: 0279 626777.

Eprom emulator

An advanced eprom emulator has been designed by JPD for use with an RS232 serial communications link. The pcb has an onboard microprocessor so that common file formats can be directly transferred from the development system to the emulator using binary, Intel hex or Motorola 'S' formats.

The unit also offers a direct/terminal operatinal mode which allows you direct access to the emulation memory. It is supplied with a 28 pin JEDEC type ribbon cable header for insertion into the target socket. This method of software development is many times faster than the traditional practice of blowing eproms.

The emulator comes complete with full user notes and circuit diagram at £99.95 plus VAT.

For more details contact: J.P. Designs, The Old School, Prickwillow, Ely, Cambridgeshire CB7 4UN. Tel: 035 388 325/455.

COUNTDOWN

If you are organising any event to do with electronics, big or small, drop us a line – we shall be glad to include it here. **Please note:** Some events listed here may be trade or restricted category only. Also, we cannot guarantee information accuracy, so check details with the organisers before setting out.

1988–89 season of Radio Amateur's Examination courses at Paddington College, London. You may find that there are late places still available for this course if you hurriedly ring David Hunt (G6MFR) on 01-402 6221 or David Peace (G4KKM) on 01-892 7585.

Oct 11–13. British Laboratory Week. Grand Hall, Olympia. 0799 26699.

Oct 18–20. Brighton Electronics Show. Metropole Hotel, Brighton (filling the slot vacated by Internepcon). 0822 614671.

Nov 1–3. Custom Electronics & Design Techniques Show. Heathrow Penta. 0799 26699.

Nov 8–12. Electronics 88, Munich. World's largest trade fair for electronic components and assemblies. 01-948 5166.

Nov 29–Dec 1. DMC-PC. Drives, motors, programmable controllers etc. National Exhibition Centre, Birmingham. 0799 26699.

Dec 11. Satro Annual Computer and Technology Show. Music Hall, Aberdeen. 0224 273161. Satro, the Science and Technology Regional Organisation is a non-profit making organisation dedicated to supporting and enhancing science and technology education. Profits from the show will be devoted to developing computer and electronics clubs. **We hope it will be well supported.**

1989

Apr 5–6. Laboratory Science and Technology Show, Kelsey Kerridge, Cambridge. 0799 26699.

Apr 25–27. British Electronics Week. Olympia. 0799 26699.

MCP ELECTRONICS LTD

28 Years

Approved MOD and BSI Distributor

Building RF Transmitters
Can give you the jitters
So call MCP TODAY
They have many devices
At rock bottom prices
And they'll process your order right away

88MHz			
PT4177A	12.5V	1.1W	£1.90
PT4236A	12.5V	1.5W	£2.00
PT8750	12.5V	50W	£10.00
PT8766	24V	1.6W	£2.25
TP210	7.5V	50mW	£0.50
175MHz 12.5V			
2N4428	1W		£0.89
2N5702	1.5W		£1.10
2N5704	12W		£2.80
2N5705	25W		£5.80
2N5706	40W		£5.00
2N6081	15W		£4.00
PT4544	10W		£2.50
PT8711A	40W		£5.00
PT8726	27W		£9.80
PT8828F	9W		£7.85
TP2310	2.5W		£1.49
TP2313	20W		£5.60
TP2320	17W		£8.25
TP2320F	17W		£9.10
1GHz			
2N4429	1W	28V	£10.78
2N5764	3W	28V	£11.50
BFR96TRW	700mW	10V	£0.46
TP3094	1Vo/p	15V	£5.40
TP3095	1Vo/p	15V	£2.20
TP390	100mVo/p	5V	£0.60
30MHz			
PT9795	12.5V	15W	£10.80
PT9796	12.5V	30W	£11.20
PT9788AA	28V	20W	£12.10
2N5070AL	28V	25W	£9.00
2N5070A	28V	25W	£9.00
175MHz 28V			
PT8706	7W		£2.50
TP2405	90W		£19.80
TP8706	7W		£2.50
TP8706D	7W		£2.50
175MHz 13.6V			
2N5589	3W		£2.50
175MHz 25V			
PT4566	40W		£10.00
400-500MHz			
2N3866/2	1W	28V	£1.20
2N5016	15W	28V	£8.50
BFX89TRW.	300mW	5V	£0.40
TP2016	1W	12.5V	£4.50
TP250	10mW	7.5W	£1.20
TP252	1.5W	7.5V	£5.00

Miscellaneous

CA2350B	Module 40-300MHz 22dB			
	24V			£27.00
MX12-4	Module 470-512MHz 12W			
	12V			£22.00
LNA501 TO8	Module 10-500MHz 5dBm			
	12V			£10.00
2N5071	76MHz	24W	24V	£7.50
PT4555	50MHz	25W	12.5V	£8.00
PT4561	150MHz	4W	26V	£3.00
TPV386	225MHz	30W	28V	£25.00

Please add 70p P&P and then add 15% V.A.T. Quotations given for large quantities. ALL Brand New Stock. Data Sheets available to buyers.

TEL: 01-900 2398

Picking SMDS

An smd test tweezer accessory for the AVO B184 mini-sized lcr component tester will be a boost for repair organisations seeking a simple solution to surface mount device identification and value measuring.

At around £25 the smd test tweezer will also spare quality assurance and development engineers the problems arising from making circuit diagram assumptions. It is the latest in an expanding range of accessories for the AVO B184 and plugs into an existing socket.

The tester is the first compact, microprocessor controlled lcr analyser to combine accuracy to 0.5 per cent, a comprehensive range of automatic routines and a rechargeable battery/mains alternative at a price as low as £375 plus VAT. As the instrument's full range of automatic facilities cover component discrimination, test frequency and ranging, the user can identify the type and value of a component simply by picking it up with the smd tweezers.

There are inductance ranges of 1mH to 1kH, capacitance ranges from 200pF to 1mF and resistance ranges from 10 ohms to 1 Mohm. An alpha-numeric display shows the major parameter of the component under test, while four keys on the tactile board may be used to disable automatic selection and manually choose the minor component, serial/parallel function, display Q and D factor or change the test frequency (100 Hz to 1 kHz).

Contact: Kate Grenshaw, Megger Instruments Limited, Archcliffe, Road, Dover, Kent CT17 9EN. Tel: 0304 202620.

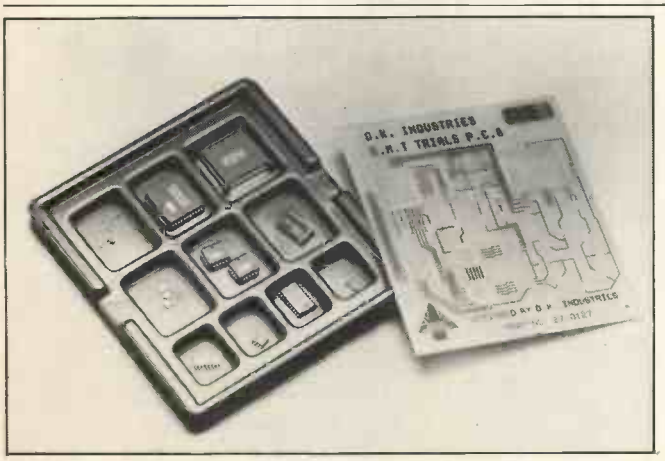

Try diy smt

Anyone interested in trying out smt (surface mounted technology could take a look at OK's lates pcb trials kit, the 27-0300. This has been designed to enable the production engineer or smt student to carry out qualified evaluation of production and rework techniques.

Included is a trials board which has been produced with the manufacturing experience of British Aerospace, using the latest technology in dry-film masking between lead centres of 0.813mm. Gull wing 100 pin flat packs are supplied together with other components in dummy form, and all parts are in a reusable conductive tray to prevent static introduction to work areas.

Contact: OK Industries UK Ltd., Barton Farm Industrial Estate, Chickenhall Lane, Eastleigh, Hants SO5 5RR. Tel: 0703 619841.

SMT jet set

A hot air jet system introduced for manual soldering and desoldering smt components can operate with factory compressed air or to be supplied with a compact electric pump. It has a dc controlled ceramic heating element and produces a temperature range at the handpiece of 75° to 500°C when used with a six-bar external compressed air supply.

An automatic safety device switches the unit off if the air supply is cut or the jet outlet gets blocked. The low consumption units operate from 220/240V.

Contact: OK Industries UK Ltd., Barton Farm Industrial Estate, Chickenhall Lane, Eastleigh, Hants SO5 5RR. Tel: 0703 619841.

Ess is for service

There is a new mail order service for the amateur and hobbyist electronics markets. Ess is based in Southampton and offers a wide range of components, tools and equipment which are detailed in a new catalogue available on request. There is no minimum order quantity, and all major credit cards are accepted for telephone and written orders.

Included in the product range are cutters, pliers, solder and etching kits, reamers, multimeters, drills and drill bits. A full range of enclosures and accessories such as knobs, scales, front panel switches are available off the shelf.

Customised sheet metal work for electronics applications is another speciality of the company. Anything from a simple bracket to a custom designed enclosure.

For further information contact David Sully, ESS Ltd, Harrison House, Harrison Road, Swaythling, Southampton SO2 3TL. Tel: (0703) 671166.

CHIP COUNT!

This month's list of new component details received.

HG62E family. Autodiagnostic gate arrays having a wider choice of array sizes and a guaranteed speed of up to 80MHz. The family now comprises 12 devices offering from 770 to 24020 gates, with 68 to 272 i-o pads **(HT)**

IMS A110. The latest digital signal processor from Inmos. Employs parallel processing architecture and is capable of 400 million operations per second on video data clocked at speeds up to 20MHz. **(IN)**

PLS159A. A new 20-pin FPLS device that is 27% faster than the basic type and has an improved programming algorithm. **(PL)**

PLH159A. A new PAL device with a two-level logic element consisting of 64 AND gates and 8 OR gates with fusible connections for programming i-o polarity and direction **(PL)**

SC87C51B. Cmos eprom microcontroller featuring a 4K x 8-bit eprom instead of a similar capacity conventional prom, and a ram capacity of 128 x 8 bits. It is the latest addition to the 8031-8051 8-bit family **(PL)**

SC8XC451, PCB8XC652, PCB8XC552 series. Three additions to the 80C51 range of microcontrollers and which improve the flexibility, memory capacity and interface options for the associated family. **(PL)**

TEA1081. A peripheral supply circuit for use in line powered telephones, and having applications where relatively high supply currents are required for facilities such as listening-in, lcd display and extended dialling. **(PL)**

(HT) Hitachi, 21 Upton Road, Watford, Herts, WD1 7TB, 0923 246488. **(IN)** Inmos, 1000 Aztec West, Almondsbury, Bristol, BS12 4SQ, 0454 616616. **(PL)** Philips Components, Mullard House, Torrington Place, London, WC1E 7HD, 01-580 6633.

Maplin chat-back

No linkage wiring is required for Maplin's new fm wireless intercom. Simply plug the units into the mains wiring and you, and your property, are wired for sound.

The unit transmits or receives on any one of three switch-selectable channels. Any number of units can be connected – in a typical installation, the "master" can call each unit where a buzzer will sound.

The intercoms are ideal for a baby room, where any sound can be monitored anywhere in the house, and reassurances broadcast. It may also be possible to communicate with neighbours, or local offices, up to about half a mile in distance, depending on whether both buildings are on the same mains phase and share the same local sub station transfer outlet.

The channel carrier frequencies are 110kHz, 125kHz, 140kHz, the overall size is 165 x 125 x 48mm high, and the power consumption 2W. Known as the YP36P intercom pair the price is £29.95, and may be bought from any of Maplin's shops.

Solar selling

Obviously commenting on the weather, TK now stock giant solar panels, 12ins x 12ins, which will deliver 12V 200mA in bright sunlight (chance would be a fine thing!) and 11.5V 60 mA on a typical British summer day (dull and overcast).

There are hundreds of uses for these cells, in the home, boat or caravan. Connect one to your car or boat battery to keep it in a charged state, or what about using one to charge nicad cells to provide a light in the garden shed or along the garden path without running cables? Or have a solar powered door bell or burglar alarm. The list is endless. Coupled to a lead acid battery and a simple inverter you could build yourself a self contained mains supply for the boat or caravan for low power appliances. With a few dozen cells and car batteries you could almost do without mains power altogether. They you could really tell the CEGB to go and get privatised! – well perhaps not, even though the price is only £14.50 plus VAT.

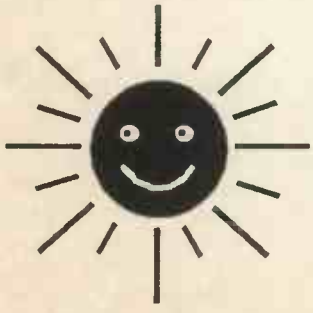

These solar cells are deposited on a sheet of glass and are well protected against the elements, but are rather fragile to send in the post. TK, therefore, have to make a charge of £1.75 per order to cover the cost of packaging units sent by post.

TK also stock low-cost smoke detectors – as low as £8.50 each, plus VAT.

For more information contact: TK Electronics, 13 Boston Road, London W7 3SJ. Tel: 01-567 88910.

Marco poly

There's even more to Marco Trading now that they have opened their third retail shop, in Birmingham.

It's called Supertronics and has over 1000 sq.ft of sales area offering not only a wide selection of components, including 100s of transistors, ics, resistors, cable, opto, but also speakers from 4W to 200W, test equipment both new and secondhand, alarm equipment, video surveillance cameras, and also, a full on site audio and video repair service by resident engineers.

They have designed this shop to display nearly all the items they sell and you can browse at your leisure during opening hours of Monday to Saturday, 9.00 to 6.00 pm (closed Wednesday).

Pay them a visit, not only will you receive a warm welcome but you will find many bargains.

The address is: Supertronics, 65 Hurst Street, Birmingham B5. Tel: 021-666 6504.

Servicing an Era

There can be few readers of an older generation living around London who will not remember, with affection, the Mecca that Lisle Street and Little Newport Street used to be.

Sadly, I learn from Gerry Cohen of the Service Trading Company, that the era of this constructor's paradise is now finally drawing to a close. After over forty years in Little Newport Street, Service Trading are closing their premises there in mid-November. With their departure, the last of the component shops along that stretch will have gone.

I am sure I am not alone in regretting the end of a diy electronics era. When, nearly thirty years ago, I bagan tentative explorations of electronics practicalities, much of my experimental stock came from these two streets. For many years the premises of G.W. Smith, Gee Bros, Southern Radio, West End Radio, Universal Radio, etc, as well as Service Trading, were my frequent haunts. Indeed, I half-recall that my original scope tube actually came from Service Trading, as well as my first piece of Veroboard.

The Service Trading Company was registered in 1947 by the partnership of Gerald Cohen, ex Sgt Intelligence Corp, and Ted Gilby, ex Capt RASC. After some years in the City, the business was transferred to Little Newport Street, joining those other memorable names. The company has been a frequent advertiser in PE right since the first issue in November 1964.

Gerry Cohen comments that thousands of young men, like myself, gained their first entry into the world of electronics through Lisle Street and Little Newport Street. He knows that many thriving companies owed their start to the help and advice given by "Uncle Ted" who, incidentally, designed the first stroboscope especially for the then-developing disco market.

Over the last few years, the area has been gradually taken over by the Chinese, and is now colloquially known as China Town. Bowing to the inevitable, Service Trading are abandoning the Orient, and retreating West, to West London in fact. Here they will be carrying on business from their warehouse premises at 57 Bridgman Road, Chiswick, London W4 5BB, telephone 01-995 1560. Gerry says that callers will continue to be welcome, and that the parking is easy!

A London era may be passing, but at least not all participants are mortally wounded. I, for one, shall remember those days with gratitude. **Ed.**

Starring DVR

Ferguson, market leader in video for over a decade, is aiming to establish a firm foothold in the new "digital" segment of the market with a state-of-the-art video recorder offering the latest in digital technology.

Competitively priced at around £479.99, the Videostar FV26D is packed with digital features, including picture in picture; multi picture in picture; perfect digital freeze; and digital slow; plus such special effects as solarisation, mosaic and strobe.

The viedo recorder comes complete with an lcd remote control with built-in memory allowing the user to programme up to four events over 14 days with a daily and weekly repeat facility. For quick access to each new recording there is a search facility which marks the beginning of each new recording with an invisible index mark. By tapping in the chosen index number, users can go to specific programmes on tape. In addition, personal indexes can easily be added to previously recorded material allowing favourite moments of a recording to be called up at the touch of a button.

There are numerous other features which stockists will be pleased to demonstrate, aided by a five-minute video demo-tape.

For further information contact: Anne Waterman, Ferguson Ltd., Cambridge House, Great Cambridge Road, Enfield, Middx. EN1 1ND. Tel: 01-363 5353.

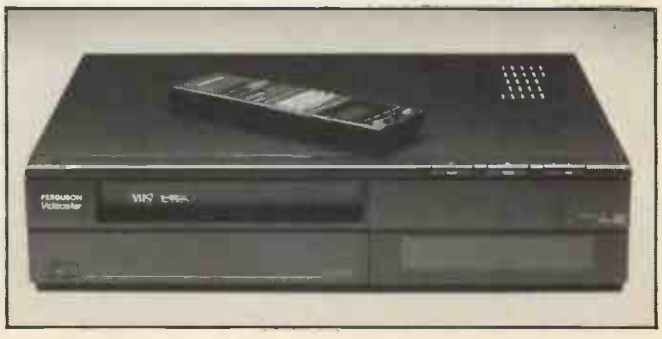

OPERATIONAL WAR GAMES

By Barry Fox
Winner of the 1987 UK Technology Press Award

MS DOS WON'T JUST GO AWAY

IBM is in the process of unveiling its new operating system, OS/2, but it will need a good argument to out flank the established MS DOS and the growing attractions of Unix.

The personal computer world is now gearing up for a major battle over operating systems – the software which must be loaded into a computer when it is first switched on, to control the running of all other programs, for instance a database, spreadsheet or word processor.

When IBM decided, in 1981, to start selling personal computers as well as mainframes, the company backed MS-DOS, (Disc Operating System) written by US company Microsoft. This made the system, now usually known simply as DOS, a de facto standard for small business computers.

Before that the de facto standard had been CP/M (Control Program for Microcomputers) developed by Digital Research. There are any number of stories which tell why IBM chose DOS rather than CP/M; the most colourful is that the CP/M people were out playing golf when Big Blue called.

Since last year IBM has been talking about OS/2 and PS/2 being the future standard; others say that they prefer to stay with DOS; and others see the future standard as Unix, an operating system developed by Bell Laboratories in America and now licensed by AT and T.

In an effort to get clearer in my mind what was going on, I recently went to two seminars, one run by IBM and another by Oracle, the world's fourth largest software company which is now marketing Case programs. This software (computer aided software engineering) helps professional computer programmers write better programs by letting them map out basic requirements on a computer – and then try out all possible options before finalising programs for sale to computer users. The software for Star Wars, the Strategic Defence Initiative, could for instance never be written without the aid of Case software.

As always with IBM, the message was one of Big Blue knows best complacancy. IBM's corporate line is smugly unswerving, and awkward questions are just brushed aside. But it all helps the jigsaw fit together.

MS DOS suffers from one major drawback. It cannot handle multitasking. In plain words, the computeer cannot do more than one thing at a time. If control software like Microsoft's Windows is used with DOS, to let several programs sit in a computer's memory at the same time, it must freeze work on one task when starting work on another. Clearly this is a nonsensical state of affairs, which bears no relationship to real business.

Quite why IBM should have worked with Microsoft to make a de facto standard out of such a limited system as DOS remains one of life's mysteries – unless it was intended to create future obsolescence. As far back as the late 1960s, IBM was making large main frame computers which would multitask, handling several programs at the same time.

Now, years overdue, IBM has worked with Microsoft to produce a multitasking operating system, known as Operating System/2. This works with the new generation of 32-bit computer chips (eg the Intel 80386) to handle more than one job at the same time. In reality, the computer chip is switching between different tasks so rapidly that the user does not realise there is any interruption.

This is an extension of the well known facility, available on most computers, called print spooling. The computer briefly takes time off from running an ordinary program, like a word processor and sets the printer running to print out a finished document. Then, while the printer chugs away, the computer goes back to word processing. Communication programs can also work in the same way, downloading files from a telephone line while the user is doing something else. In the future programs specially written for OS/2 and the 386 chip will run together so that the user can set a spread sheet calculating and a data base searching while carrying on with text editing in a word processor.

To preserve a degree of backwards compatibility OS/2 can be switched to mimic MS DOS. So a computer running OS/2 can still handle old programs written for DOS as well as new programs written for OS/2. Alternatively the hard disk in a computer can be partitioned so that part of it runs old programs under DOS and part of it runs new programs under OS/2.

The first version of OS/2, which is now available as V1.0, is quite basic and requires a fair degree of knowledge on the part of the user. At the end of this year Version 1.1, called Presentation Manager, will be much easier to use; it is more like an Apple Mac. The industry sees the release of Presentation Manager as a crucial watershed. IBM glibly assumes that OS/2 will then become the new standard.

Like a soap powder manufacturer pushing the latest whiter-than-white recipe, IBM is now surprisingly dismissive of existing IBM PCs and MS DOS. Many business users, who have invested in IBM equipment and programs for MS DOS, may see this as a breach of faith. So IBM's enthusiasm for OS/2 may well backfire.

The company has a hidden and very good reason for wanting OS/2 to become the new standard. IBM has developed a new range of computers, called PS/2 (Personal System/2) which are designed to run OS/2 software. They do this with a new technology called Micro Channel Architecture or MCA which was designed to work with the 386 computer chip. And IBM claims legal monopoloy on MCA.

Although IBM describes the Micro Channel as hardware, there is a considerable amount of confusion over exactly what it is and does. IBM usually describes MCA by making bland analogies with busy offices, hourglass bottlenecks and crowded bank queues. The nearest to nitty-gritty forthcoming from IBM is the explanation that MCA eliminates the old bottleneck of a single data bus by using multiple input and output channels for data signals going to and from the computer precessor chip. This lets the data run slower, creating less risk of radio frequency interference. Also the data is transferred in blocks of 256 bytes instead of one byte at a time. On the face of things, MCA sounds an obvious logical approach to a persistent problem.

IBM wants to emphasise the value of MCA, because it hopes to use the new PS/2-OS/2-MCA approach as a way of squeezing royalties out of other firms

Continued on page 30.

PE SCIENCE AND TECHNOLOGY

VOLUME 24 No. 11
NOVEMBER 1988

ISSN 0032 – 6372

Editor:
John Becker
Sub-Editor:
Helen Armstrong
Technical Illustrator:
Derek Gooding
Advertisement Sales:
Sarah Holtham
Business Manager:
Mary-Ann Hubers
Circulation:
David Hewett
Publisher:
Angelo Zgorelec
Editorial and Advertising Address:
Practical Electronics,
Intra House, 193 Uxbridge Road,
London W12 9RA
Tel: 01-743 8888
Telecom Gold: 87: SQQ567
Fax: 01-743 3062

Advertisements
All correspondence relating to advertisements, including classified ads, should be addressed to: **The advertisement department, Practical Electronics, at the above address and telephone number.**

Readers' Enquiries
All editorial correspondence should be addressed to the editor and any letters requiring a reply should be accompanied by a stamped addressed envelope, or equivalent payment.
We regret that lengthy technical enquiries cannot be answered over the phone.

Subscription Address:
Practical Electronics, Subscription Dept., P.O. Box 500, Leicester LE99 0AA

Annual Subscription Rates:
U.K. £15.00 Overseas £18.00
Students: Deduct £1 and quote student number.

Cover Illustration:
Paul Doherty.

© Intra Press 1988. Copyright in all drawings, photographs and articles published in PRACTICAL ELECTRONICS is fully protected, and reproduction or imitations in whole or part are expressly forbidden. All reasonable precautions are taken by PRACTICAL ELECTRONICS to ensure that the advice and data given to readers is reliable. We cannot, however, guarantee it, and we cannot accept legal responsibility for it. Prices quoted are those current as we go to press. All material is accepted for publication on the express understanding that the contributor has the authority to permit us to do so.

DOMINATING BRITAIN

Crises in the British enconomy are nothing new and, despite media excitement each time another one occurs, we seem to overcome them. It was with this in mind that I read yet another crisis report, about the strength of the UK electronics industry.

NEDO, the National Economic Development Office, issued the report and in it they spotlight the fact that UK electronics companies have been losing business to overseas competitors. The report warns that by the early 1990s, British companies will be supplying only half the available home market compared to 15 years ago. This will be despite the growth of the market by close to 10% in the last year. Failure to meet the needs of this expanding market is blamed on management's lack of visionary leadership.

While criticism of this nature comes as no surprise, the report's attitude towards British electronic's involvement in defence and telecommunications is unexpected. There is too heavy an emphasis, it says, on these two areas which it considers to be currently stagnant.

We cannot disagree with the need for Britain to take a more aggressive and visionary approach, but to criticise British success in defence and telecoms, seems contradictory. Other reports which we periodically receive appear to indicate that both areas are growing and that we are winning overseas orders in the face of stiff foreign competition.

We recognise that in some areas, British technology, although by no means outclassed on quality, is frequently outflanked by low price tags on foreign equivalents. This is particularly true of consumer goods, as exemplified by the proliferation of imports in the high street shops.

Aggression may well be needed in making the home market more aware that to buy British means to buy quality, but when the average person is buying sophisticated equipment, cost is an important factor. To discriminating purchasers, no amount of aggressive promotion will convince them that of two technically equivalent products, the more expensive will necessarily be the best. Most people would prefer to support British industry, but they cannot be expected to subsidise it by choice.

There is no question that management must continue to streamline production costs. An area that is debatable is the way in which stock market activities often play an unpredictable part in management's attempt at achieving competitive costs. The report rejects the premise that British electronics is hindered by the fickleness of City investors, but it concedes that industry can do more to communicate long term strategies to the financial markets. It also calls for a better component infrastructure and more emphasis on human resources.

Although the report is negative in some aspects, it should be regarded as a source of workable recommendations for achieving future success. We are reassured in our belief that British electronics can dominate the global technology market.

THE EDITOR

01-208 1177 TECHNOMATIC LTD 01-208 1177

BBC Computer & Econet Referral Centre

AMB15 BBC MASTER £346 (a) — AMB12 BBC MASTER Econet £315 (a)
AMC06 Turbo (65C – 02) Expansion Module £99 (b)

ADC08	512 Processor	£195 (b)	ADJ24	Advanced Ref Manual	£19.50 (c)
ADF14	Rom Cartridge	£13 (b)	ADF10	Econet Module	£41 (c)
ADJ22	Ref Manual Part 1	£14 (c)	ADJ23	Ref Manual Part II	£14 (c)
				BBC Master Dust Cover	£4.75 (d)

BBC MASTER COMPACT
A free packet of ten 3.5 DS discs with each Compact
SYSTEM 1 128K Single 640K Drive and bundled software £385 (a)
SYSTEM 2 System 1 with a 12 Hi Res RGB Monitor £469 (a)
SYSTEM 3 System 1 with a 14 Med Res RGB Monitor £599 (a)
Second Drive Kit £99 (c) Extension Cable for ext 5.25 drive £12.50 (d)

View 3.0 User Guide £10 (d) — Viewsheet User Guide £10 (d)
BBC Dust Cover £4.50 (d) — 1770 DFS Upgrade for Model B £43.50 (d)
ADFS ROM (for B with 1770 DFS & B Plus) £26 (d) — 1.2 OS ROM £15 (d)
ACORN Z80 2nd Processors £329 (a) — ACORN 6502 2nd Processor £173 (b)
MULTIFORM Z80 2nd Processor £289 (b) — ACORN IEEE Interface £269 (a)
TORCH Z80 2nd Processor ZEP 100 £229 (a)
TZDP 240 ZEP 100 with Technomatic PD800P dual drive with built-in monitor stand £439 (a)

META Version III – The only package available in the micro market that will assemble 27 different processors at the price offered. Supplied on two 16K roms and two discs and fully compatible with all BBC models. Please phone for comprehensive leaflet £145 (b).

We stock the full range of ACORN hardware and firmware and a very wide range of other peripherals for the BBC. For detailed specifications and pricing please send for our leaflet

PRINTERS & PLOTTERS

EPSON
EPSON LX86 ..... £189 (a)
Optional Tractor Feed LX80/86 ..... £20 (c)
Sheet Feeder LX80/86 ..... £49 (c)
FX800 ..... £319 (a)
FX1000 ..... £449 (a)
EX800 ..... £409 (a)
LQ800 (80 col) ..... £439 (a)
LQ1000 ..... £589 (a)

TAXAN
KP815 (160 cps) ..... £249 (a)
KP915 (180 cps) ..... £369 (a)

JUKI
6100 (Daisy Wheel) ..... £259 (a)

NATIONAL PANASONIC
KX P1080 (80 col) ..... £149 (a)

STAR NL10 (Parallel Interface) ..... £209 (a)
STAR NL10 (Serial Interface) ..... £279 (a)
STAR Power Type ..... £229 (a)

BROTHER HR20 ..... £329 (a)

COLOUR PRINTERS

Dotprint Plus NLQ Rom for Epson versions for FX, RX, MX and GLP (BBC only) ..... £28 (d)

PLOTTERS
Hitachi 672 ..... £459 (a)
Graphics Workstation (A3 Plotter) ..... £599 (a)
Plotmate A4SM ..... £450 (a)

PRINTER ACCESSORIES

We hold a wide range of printer attachments (sheet feeders, tractor feeds etc) in stock. Serial, parallel, IEEE and other interfaces also available. Ribbons available for all above plotters. Pens with a variety of tips and colours also available. Please phone for details and prices.
Plain Fanfold Paper with extra fine perforation (Clean Edge):
2000 sheets 9.5" × 11" **£13(b)** 2000 sheets 14.5" × 11" **£18.50(b)**
Labels per 1000s: Single Row 3½" × 1 7/16" **£5.25(d)** Triple Row 2-7/16" × 1 7/16" **£5.00(d)**

MODEMS

All modems carry a full BT approval

MIRACLE TECHNOLOGY WS Range

WS4000 V21/23 (Hayes Compatible, Intelligent, Auto Dial/Auto Answer) ..... **£149 (b)**

WS3000 V21/23 Professional As WS4000 and with BELL standards and battery back up for memory ..... **£245 (b)**

WS3000 V22 Professional As WS300 V21/23 but with 1200 baud full duplex ..... **£450 (a)**

WS3000 V22 bis Professional As V22 and 2400 baud full duplex ..... **£595 (a)**

WS3022 V22 Professional As WS3000 but with only 1200/1200 ..... **£350 (a)**

WS3024 V22 Professional As WS3000 but with only 2400/2400 ..... **£450 (b)**

WS2000 V21/V23 Manual Modem ..... **£95 (b)**

DATA Cable for WS series/PC or XT ..... **£10 (d)**

DATATALK Comms Package
* If purchased with any of the above modems * ..... ***£70 (c)**

PACE Nightingale Modem V21/V23 Manual ..... **£75 (b)**

(Offer limited to current stocks)

SOFTY II

This low cost intelligent eprom programmer can program 2716, 2516, 2532, 2732, and with an adaptor, 2564 and 2764. Displays 512 byte page on TV – has a serial and parallel I/O routines. Can be used as an emulator, cassette interface.
Softy II ..... £195.00 (b)
Adaptor for 2764/2564 ..... £25.00

PLEASE TELEPHONE FOR CURRENT PRICES

RT256 3 PORT SWITCHOVER SERIAL INTERFACE
3 input/1 output or 1 input/3 output manual channel selection. Input/output baud rates, independently selectable 7 bit/8 bit, odd/even/none parity. Hardware or software handshake. 256K buffer, mains powered ..... £375 (b)

PB BUFFER
Internal buffer for most Epson printers. Easy to install. Inst. supplied.
PB128 128K ..... £99 (c)

I.D. CONNECTORS

(Speedblock Type)

No of ways	Header Plug	Recep. 'acle	Edge Conn
10	90p	85p	120p
20	145p	125p	195p
26	175p	150p	240p
34	200p	160p	320p
40	220p	190p	340p
50	235p	200p	390p

D CONNECTORS

No of Ways	9	15	25	37
MALE:				
Ang Pins	120	180	230	350
Solder	60	85	125	170
IDC	175	275	325	—
FEMALE:				
St Pin	100	140	210	380
Ang Pins	160	210	275	440
Solder	90	130	195	290
IDC	195	325	375	—
St Hood	90	95	100	120
Screw Lock	130	150	175	—

TEXTOOL ZIF

SOCKETS 24-pin £7.50
28-pin £9.10 40-pin £12.10

EDGE CONNECTORS

	0.1	0.156
2 × 6-way (commodore)	—	300p
2 × 10-way	150p	—
2 × 12 way (vic 20)	—	350p
2 × 18 way	—	140p
2 × 23 way (ZX81)	175p	220p
2 × 25 way	225p	220p
2 × 28 way (Spectrum)	200p	—
2 × 36 way	250p	—
1 × 43 way	260p	—
2 × 22 way	190p	—
2 × 43 way	395p	—
1 × 77 way	400p	500p
2 × 50 way (S100 conn)	600p	—

EURO CONNECTORS

DIN 41612	Plug	Skt
2 × 32 way St Pin	230p	275p
2 × 32 way Ang Pin	275p	320p
3 × 32 way St Pin	260p	300p
3 × 32 way Ang Pin	375p	400p
IDC Skt A + B		400p
IDC Skt A + C		400p

For 2 × 32 way please specify spacing (A + B, A + C).

MISC CONNS

21 pin Scart Connector 200p
8 pin Video Connector 200p

AMPHENOL CONNECTORS

36 way plug Centronics (solder 500p (IDC) 475p
36 way skt Centronics (solder) 550p (IDC) 500p
24 way plug IEEE (solder) 475p (IDC) 475p
24 way skt IEEE (solder) 500p (IDC) 500p
PCB Mtg Skt Ang Pin 24 way 700p 36 way 750p

GENDER CHANGERS

25 way D type

Male to Male £10
Male to Female £10
Female to Female £10

RS 232 JUMPERS

(25 way D)

24" Single end Male	£5.00
24" Single end Female	£5.25
24" Female Female	£10.00
24" Male Male	£9.50
24" Male Female	£9.50

DIL SWITCHES

4-way 90p 6-way 105p
8-way 120p 10-way 150p

RIBBON CABLE

(grey/metre)

10-way	40p	34-way	160p
16-way	60p	40-way	180p
20-way	85p	50-way	200p
26-way	120p	64-way	280p

DIL HEADERS

	Solder	IDC
14 pin	40p	100p
16 pin	50p	110p
18 pin	60p	—
20 pin	75p	—
24 pin	100p	150p
28 pin	160p	200p
40 pin	200p	225p

DISC DRIVES

5.25" Single Drives 40/50 switchable:
TS400 400K/640K ..... £114 (b)
PS400 400K/640K with integral mains power supply ..... £129 (b)
5.25" Dual Drives 40/80 switchable:
TD800 800K/1280K ..... £199 (a)
PD800 800K/1280K with integral mains power supply ..... £229 (a)
PD800P 800K/1280K with integral mains power supply and monitor stand ..... £249 (a)
3.5" 80T DS Drives:
TS351 Single 400K/640K ..... £99 (b)
PS351 Single 400K/640K with integral mains power supply ..... £119 (b)
TD352 Dual 800K/1280K ..... £170 (b)
PD352 Dual 800K/1280K with integral mains power supply ..... £187 (b)
PD853 Combo Dual 5.25"/3.5" drive with p.s.u. ..... £229 (a)

3M FLOPPY DISCS

Industry Standard floppy discs with a lifetime guarantee. Discs in packs of 10

5¼" Discs				3½" Discs	
40 T SS DD	£10.00 (d)	40 T DS DD	£12.00 (d)	80 T SS DD	£20.00 (d)
80 T SS DD	£14.50 (d)	80 T DS DD	£15.50 (d)	80 T DS DD	£25.00 (d)

FLOPPICLENE DRIVEHEAD CLEANING KIT

FLOPPICLENE Disc Head Cleaning Kit with 28 disposable cleaning discs ensures continued optimum performance of the drives. 5¼" **£12.50 (d)** 3½" **£14.00 (d)**

DRIVE ACCESSORIES

Single Disc Cable **£6 (d)** — Dual Disc Cable **£8.50 (d)**
10 Disc Library Case **£1.80 (d)** — 30 × 5½" Disc Storage Box **£6 (c)**
50 × 5½" Disc Lockable Box **£9.00 (c)** — 100 × 5½" Disc Lockable Box **£13 (c)**

MONITORS

RGB 14"
1431 Std Res ..... £179 (a)
1451 Med Res ..... £225 (a)
1441 Hi Res ..... £365 (a)

MICROVITEC 14" RGB/PAL/Audio
1431AP Std Res ..... £199 (a)
1451AP Std Res ..... £259 (a)
All above monitors available in plastic or metal case.

TAXAN SUPERVISION II
12" – Hi Res with amber/green options. IBM compatible ..... £279 (a)
Taxan Supervision III ..... £319 (a)

MITSUBISHI
XC1404 14" Med Res RGB, IBM & BBC compatible ..... £219 (a)

MONOCHROME
TAXAN 12" HI-RES
KX1201G green screen ..... £90 (a)
KX1203A amber screen ..... £95 (a)

PHILIPS 12" HI-RES
BM7502 green screen ..... £75 (a)
BM7522 amber screen ..... £79 (a)
8501 RGB Std Res ..... £139 (a)

ACCESSORIES
Microvitec Swivel Base ..... £20 (c)
Taxan Mono Swivel Base with clock ..... £22 (c)
Philips Swivel Base ..... £14 (c)
BBC RGB Cable ..... £5 (d)
Microvitec ..... £3.50 (d)
Taxan £5 (d) ..... Monochrome £3.50 (d)
Touchtec – 501 ..... £239 (b)

UVERASERS

UV1T Eraser with built-in timer and mains indicator. Built-in safety interlock to avoid accidental exposure to the harmful UV rays.
It can handle up to 5 eproms at a time with an average erasing time of about 20 mins £59 + £2 p&p.
UV1 as above but without the timer £47 + £2 p&p.
For Industrial Users, we offer UV140 & UV141 erasers with handling capacity of 14 eproms. UV141 has a built in timer. Both offer full built in safety features
UV140 £69, UV141 £85, p&p £2.50.

EXT SERIAL/PARALLEL CONVERTERS

Mains powered converters
Serial to Parallel ..... £48 (c)
Parallel to Serial ..... £48 (c)
Bidirectional Converter ..... £105 (b)

Serial Test Cable

Serial Cable switchable at both ends allowing pin options to be re-routed or linked at either end – making it possible to produce almost any cable configuration on site.
Available as M/M or M/F **£24.75 (d)**

Serial Mini Patch Box

Allows an easy method to reconfigure pin functions without rewiring the cable assay. Jumpers can be used and reused. **£22 (d)**

Serial Mini Test

Monitors RS232C and CCITT V24 Transmissions, indicating status with dual colour LEDs on 7 most significant lines. Connects in Line. **£22.50 (d)**

CONNECTOR SYSTEMS

ATTENTION

All prices in this double page advertisement are subject to change without notice. ALL PRICES EXCLUDE VAT Please add carriage 50p unless indicated as follows: (a) £8 (b) £2.50 (c) £1.50 (d) £1.00

TECHNOLINE VIEWDATA SYSTEM. TEL: 01-450 9764

Using 'Prestel' type protocols. For information and orders – 24 hour service, 7 days a week

74 SERIES

7400	0.30
7401	0.30
7402	0.30
7403	0.30
7404	0.36
7405	0.30
7406	0.40
7407	0.40
7408	0.30
7409	0.30
7410	0.30
7411	0.30
7412	0.30
7413	0.50
7414	0.70
7416	0.36
7417	0.40
7420	0.30
7421	0.80
7422	0.36
7423	0.36
7425	0.40
7426	0.40
7427	0.32
7428	0.43
7430	0.30
7432	0.36
7433	0.30
7437	0.30
7438	0.40
7439	0.40
7440	0.40
7441	0.90
7442A	0.70
7443A	1.00
7444	1.10
7445	0.70
7446A	1.00
7447A	1.00
7448	1.00
7450	0.36
7451	0.35
7453	0.38
7454	0.38
7460	0.55
7470	0.50
7472	0.45
7473	0.45
7474	0.50
7475	0.60
7476	0.45
7480	0.65
7481	1.80
7483A	1.05
7484A	1.25
7485	1.10
7486	0.42
7489	2.10
7490A	0.55
7491	0.70
7492A	0.70
7493A	0.55
7494	1.10
7495A	0.60
7496	0.80
7497	2.90
74100	1.90
74107	0.50
74109	0.75
74110	0.75
74111	0.55
74116	1.70
74118	1.10
74119	1.70
74120	1.00
74121	0.55
74122	0.70
74123	0.80
74125	0.65
74126	0.55
74128	0.55
74132	0.75
74136	0.70
74141	0.90
74142	2.50
74143	1.30
74144	2.70
74145	1.10
74147	1.70
74148	1.40
74150	1.75
74151A	0.70
74153	0.80
74154	1.40
74155	0.80
74156	0.90
74159	2.25
74160	1.10
74161	0.80
74162	1.10
74163	1.10
74164	1.20
74165	1.10
74166	1.40
74167	4.00
74170	2.00
74172	4.20
74173	1.40
74174	1.10
74175	1.05
74176	1.00
74178	1.50
74179	1.50
74180	1.00
74181	3.40
74182	1.40
74184	1.80
74185A	1.80
74190	1.30
74191	1.30
74192	1.10
74193	1.15
74194	1.10
74195	0.80
74196	1.30
74197	1.10
74198	2.20
74199	2.20
74221	1.10
74251	1.00
74259	1.50
74265	0.80
74273	2.00
74276	1.40
74278	1.70
74279	0.90
74283	1.05
74742	3.20
74290	0.90
74293	0.90
74298	1.80
74351	2.00
74365A	0.80
74366A	0.80
74367A	0.80
74376	1.60
74390	1.10
74393	1.20
74490	1.40

74LS SERIES

74LS00	0.24
74LS01	0.24
74LS02	0.24
74LS03	0.24
74LS04	0.24
74LS05	0.24
74LS08	0.24
74LS09	0.24
74LS10	0.24
74LS11	0.24
74LS13	0.34
74LS14	0.50
74LS15	0.24
74LS20	0.24
74LS21	0.24
74LS22	0.24
74LS24	0.50
74LS26	0.26
74LS27	0.24
74LS28	0.24
74LS30	0.24
74LS32	0.24
74LS33	0.24
74LS37	0.24
74LS38	0.24
74LS40	0.24
74LS42	0.50
74LS43	1.50
74LS48	0.90
74LS49	1.00
74LS51	0.24
74LS54	0.24
74LS55	0.24
74LS73A	0.30
74LS74A	0.35
74LS75	0.45
74LS76A	0.36
74LS78	0.42
74LS83A	0.70
74LS85	0.75
74LS86	0.35
74LS90	0.48
74LS92	0.95
74LS93	0.54
74LS95B	0.75
74LS96	0.90
74LS107	0.40
74LS109	0.40
74LS112	0.45
74LS113	0.45
74LS114	0.45
74LS122	0.70
74LS123	0.80
74LS125	0.50
74LS126	0.50
74LS132	0.65
74LS133	0.55
74LS136	0.45
74LS138	0.55
74LS139	0.55
74LS145	0.95
74LS147	1.75
74LS148	1.40
74LS151	0.65
74LS152	2.00
74LS153	0.65
74LS154	1.80
74LS155	0.65
74LS156	0.65
74LS157	0.50
74LS158	0.65
74LS160A	0.65
74LS161A	0.75
74LS162A	0.75
74LS163A	0.75
74LS164	0.75
74LS165A	1.10
74LS166A	1.50
74LS168	1.30
74LS169	1.00
74LS170	1.40
74LS173A	1.00
74LS174	0.75
74LS175	0.75
74LS181	2.00
74LS183	1.90
74LS190	0.75
74LS191	0.75
74LS192	0.80
74LS194A	0.75
74LS195A	0.75
74LS196	0.80
74LS197	0.80
74LS221	0.90
74LS240	0.80
74LS241	0.80
74LS242	0.90
74LS243	0.90
74LS244	0.70
74LS245	0.90
74LS247	1.10
74LS248	1.10
74LS249	1.10
74LS251	0.75
74LS253	0.75
74LS256	0.90
74LS257A	0.70
74LS258A	0.70
74LS259	1.20
74LS260	0.75
74LS266	0.80
74LS273	1.25
74LS279	0.70
74LS280	1.90
74LS283	0.80
74LS290	0.80
74LS292	14.00
74LS293	0.80
74LS295	1.40
74LS297	14.00
74LS298	1.00
74LS299	2.20
74LS321	3.70
74LS322A	3.90
74LS323	3.00
74LS324	3.20
74LS348	2.00
74LS352	1.20
74LS353	1.20
74LS356	2.10
74LS363	1.80
74LS364	1.80
74LS365	0.50
74LS366	0.50
74LS367	0.52
74LS368	0.50
74LS373	0.70
74LS374	0.70
74LS375	0.75
74LS377	1.30
74LS378	0.95
74LS379	1.30
74LS381	4.50
74LS385	3.25
74LS390	0.60
74LS393	1.00
74LS395A	1.00
74LS399	1.40
74LS445	1.80
74LS465	1.20
74LS467	1.20
74LS490	1.50
74LS540	1.00
74LS541	1.00
74LS608	7.00
74LS610	25.00
74LS612	25.00
74LS624	3.50
74LS626	2.25
74LS628	2.25
74LS629	1.25
74LS640	2.00
74LS640-1	3.00
74LS641	1.50
74LS642	2.50
74LS642-1	3.00
74LS643	2.50
74LS643-1	3.00
74LS644	3.50
74LS645	2.00
74LS645-1	4.00
74LS668	0.90
74LS669	0.90
74LS670	1.70
74LS682	2.50
74LS683	3.00
74LS684	3.50
74LS687	3.50
74LS688	3.50
74LS783	16.00

74S SERIES

74S00	0.50
74S02	0.50
74S04	0.50
74S05	0.50
74S08	0.50
74S10	0.50
74S20	0.50
74S22	0.50
74S30	0.50
74S32	0.60
74S37	0.60
74S38	0.80
74S40	0.50
74S51	0.60
74S64	0.45
74S74	0.70
74S85	5.50
74S86	1.00
74S112	0.90
74S113	1.20
74S114	1.20
74S124	3.00
74S132	1.00
74S133	0.80
74S138	1.80
74S139	1.80
74S140	1.00
74S151	1.50
74S153	1.50
74S157	2.00
74S158	2.00
74S163	3.00
74S169	5.50
74S174	3.00
74S175	3.20
74S188	1.80
74S189	1.80
74S194	3.00
74S195	3.00
74S196	3.50
74S200	4.50
74S201	3.20
74S225	5.20
74S240	4.00
74S241	4.00
74S244	4.00
74S251	2.50
74S257	2.50
74S258	2.50
74S260	1.00
74S261	3.00
74S283	2.70
74S287	2.25
74S288	2.00
74S289	2.25
74S299	4.50
74S373	4.00
74S374	4.00
74S387	2.25

Special offer to PE readers only – 10% off on all TTLS and CMOS

74ALS SERIES

74ALS00	0.45
74ALS02	0.45
74ALS04	0.50
74ALS08	0.50
74ALS10	0.45
74ALS20	0.45
74ALS32	0.45
74ALS74	0.70
74ALS138	1.50
74ALS139	1.50
74ALS244	4.00
74ALS245	4.75
74ALS573	2.60
74ALS574	4.50
74ALS580	2.60

4000 SERIES

4000	0.20
4001	0.24
4002	0.25
4006	0.70
4007	0.25
4008	0.60
4009	0.45
4010	0.60
4011	0.24
4012	0.25
4013	0.36
4014	0.60
4015	0.70
4016	0.36
4017	0.55
4018	0.60
4019	0.60
4020	0.80
4021	0.60
4022	0.70
4023	0.30
4024	0.48
4025	0.24
4026	0.90
4027	0.40
4028	0.60
4029	0.75
4030	0.35
4031	1.25
4032	1.00
4033	1.25
4034	2.50
4035	0.70
4036	2.50
4037	1.10
4038	1.00
4040	0.60
4041	0.55
4042	0.50
4043	0.60
4044	0.60
4045	1.00
4046	0.60
4047	0.60
4048	0.55
4049	0.36
4050	0.35
4051	0.65
4052	0.60
4053	0.60
4054	0.80
4055	0.80
4056	0.85
4060	0.70
4063	0.85
4066	0.40
4067	2.30
4068	0.25
4069	0.24
4070	0.24
4071	0.24
4072	0.24
4073	0.24
4075	0.24
4076	0.65
4077	0.25
4078	0.25
4081	0.24
4082	0.25
4085	0.60
4086	0.75
4089	1.20
4093	0.35
4094	0.90
4095	0.95
4096	0.90
4097	2.70
4098	0.75
4099	0.99
4501	0.36
4502	0.55
4503	0.36
4504	0.95
4505	3.60
4506	0.90
4507	0.35
4508	1.20
4510	0.55
4511	0.55
4512	0.55
4513	1.50
4514	1.10
4515	1.10
4516	0.55
4517	2.20
4518	0.48
4519	0.32
4520	0.60
4521	1.15
4522	0.80
4526	0.70
4527	0.80
4528	0.65
4529	1.00
4531	0.75
4532	0.65
4534	3.80
4536	2.50
4538	0.75
4539	0.75
4541	0.90
4543	0.70
4551	1.00
4553	2.40
4555	0.36
4556	0.50
4557	2.40
4560	1.40
4566	1.40
4568	2.40
4569	1.70
4572	0.45
4583	0.90
4584	0.48
4585	0.80
4724	1.50
14411	7.50
14412	7.50
14416	3.00
14419	2.60
14490	4.20
14495	4.50
145000	6.50
14599	2.00
22100	3.50
22101	7.00
22102	7.00
40014	0.48
40085	1.20
40097	0.36
40098	0.40
40100	1.50
40101	1.25
40102	1.30
40103	2.00
40104	1.20
40105	1.50
40106	0.48
40107	0.55
40108	3.20
40109	0.80
40110	2.25
40114	2.25
40107	2.80
40163	1.00
40173	1.20
40174	1.00
40175	1.00
40192	1.00
40193	1.00
40194	1.00
40244	1.50
40245	1.50
40257	1.80
40373	1.80
40374	1.80
80C95	0.75
80C97	0.75
80C98	0.75

LINEAR ICs

ADC0808	11.90
AM7910DC	12.00
AN103	2.00
AN-1-5050	1.00
AY-3-1350	5.00
AY-3-8910	4.90
AY-3-8912	5.00
CA3019A	1.00
CA3020	3.50
CA3028A	1.10
CA3046	0.70
CA3059	3.25
CA3060	3.50
CA3080E	0.70
CA3085	1.50
CA3086	0.60
CA3089E	2.50
CA3090AQ	3.75
CA3130E	0.90
CA3130T	1.30
CA3140E	0.45
CA3140T	1.00
CA3146	2.25
CA3160E	1.50
CA3161E	2.00
CA3162E	6.00
CA3189E	2.70
CA3240E	1.50
CA3280G	3.00
D7002	8.00
DAC1408-8	3.00
DAC0800	3.00
DAC0808	3.00
DG308	3.00
HA1366	1.90
ICL7106	6.75
ICL7611	0.95
ICL8038	4.00
ICM7555	0.90
ICM7556	1.40
LC7120	3.00
LC7130	3.00
LC7131	3.50
LC7137	3.50
LF347	1.20
LF351	0.60
LF353	0.90
LF355	0.90
LF356N	1.10
LF357	1.00
LF398	4.00
LM10CLH	4.50
LM301A	0.30
LM307	0.45
LM308CN	0.75
LM310	2.25
LM311	0.60
LM318	1.50
LM319	1.80
LM324	0.45
LM334Z	1.15
LM335Z	1.30
LM336	1.60
LM339	0.40
LM348	0.60
LM358P	0.50
LM377	3.00
LM380N-8	1.50
LM380N	1.50
LM383	3.25
LM384	2.20
LM386N-1	1.00
LM387	2.70
LM391	1.80
LM392N	1.10
LM393	0.85
LM394CH	4.00
LM709	0.35
LM710	0.48
LM711	1.00
LM723	0.80
LM725CN	3.00
LM733	0.65
LM741	0.22
LM747	0.70
LM748	0.30
LM1011	4.80
LM1014	1.50
LM1801	3.00
LM1830	2.50
LM1871	3.00
LM1872	3.00
LM1886	6.00
LM1889	4.50
LM2917	3.00
LM3302	0.90
LM3900	0.80
LM3909	1.40
LM3911	1.80
LM3914	3.50
LM3915	3.40
LM3916	3.40
LM13600	1.50
MS1513L	2.30
MB1516L	4.50
MB3712	2.00
MC1310P	1.50
1413	0.75
MC1458	0.45
MC1495	3.00
MC1496	0.70
MC3340P	2.00
MC3401	0.70
MC3404	0.65
MF10CN	4.10
MK50240	9.00
ML902	5.00
ML922	4.00
MM6221A	3.00
NE529	2.20
NE531	1.20
NE544	1.90
NE555	0.22
NE556	0.60
NE564	4.00
NE565	1.20
NE566	1.50
NE567	1.25
NE570	4.00
NE571	3.00
NE592	0.90
NE5532P	1.50
NE5533P	1.60
NE5534P	1.20
NE5534AP	1.50
OP-07EP	3.50
PLL02A	5.00
RC4136	0.55
RC4151	2.00
RC4195	1.50
RC4558	0.55
S50240	9.00
SN76013N	5.00
SN76033N	5.00
SPO256AL2	7.00
SP8515	7.50
TA7120	1.20
TA7130	1.40
TA7204	1.50
TA7205	0.90
TA7222	1.50
TA7310	1.50
TBA231	1.20
TBA800	0.80
TBA810	0.90
TBA20	0.80
TBA820M	0.75
TBA920	2.00
TBA950	2.25
TC9109	5.00
TCA270	3.50
TCA940	1.75
TDA1010	2.25
TDA1024	1.10
TDA1170S	3.00
TDA1170N	3.00
TDA2002	3.25
TDA2003	1.90
TDA2004	2.40
TDA2006	3.20
TDA2030	2.50
TDA2593	5.00
TDA2653	7.00
TDA3560	7.50
TDA3810	7.50
TDA7000	3.50
TEA1002	7.00
TL061CP	0.40
TL062	0.60
TL064	0.90
TL071	0.40
TL072	0.70
TL074	1.10
TL081	0.35
TL082	0.55
TL083	0.75
TL084	1.00
TL094	2.00
TL430C	1.20
UA759	3.20
UA2240	1.20
UCN5801A	8.00
ULN2001A	0.75
ULN2002A	0.75
ULN2003A	0.75
ULN2004A	0.75
ULN2068	2.90
ULN2802	1.90
ULN2803	1.80
ULN2804	1.90
UPC575	2.75
UPC592H	2.00
UPC1156H	3.00
UPC1185H	5.00
XR210	4.00
XR2206	4.50
XR2207	3.75
XR2211	5.75
XR2216	6.75
XR2240	1.20
ZN404	1.00
ZN414	0.80
ZN419P	1.75
ZN423E	1.30
ZN424E	1.30
ZN425E8	3.50
ZN426E8	3.00
ZN428E8	6.00
ZN428E8	4.50
ZN429E8	2.25
ZN447E	9.00
ZN448I	7.50
ZN449E	3.00
ZN450E	7.50
ZN459CP	3.00
ZN1034E	2.00
ZNA1040	6.60
ZNA134H	23.00
ZNA234E	9.50

VOLTAGE REGULATORS

1A FIXED VOLTAGE PLASTIC TP220

+VE		−VE	
5V 7805	0.45	7905	0.50
6V 7806	0.50	7906	0.50
8V 7808	0.50	7908	0.50
12V 7812	0.45	7912	0.50
15V 7815	0.50	7915	0.50
18V 7818	0.50	7918	0.50
24V 7824	0.50	7924	0.50

1A FIXED VOLTAGE PLASTIC TO92

5V 78L05	0.30	5V 79L05	0.45
6V 78L06	0.30	12V 79L12	0.50
8V 78L08	0.30	15V 79L15	0.50
12V 78L12	0.30		
15V 78L15	0.30		

OTHER REGULATORS

FIXED REGULATORS

LM309K	1A 5V	1.40
LM323K	3A 5V	3.50
L78H05KC	5A 5V	7.50

VARIABLE REGULATORS

LM305AH		2.50
LM317T	TO-220	1.20
LM317K	TO3	2.40
LM337T		2.25
LM350T		4.00
LM723N		0.50

SWITCHING REGULATORS

ICL7660	2.50
SG3524	3.00
TL494	3.00
TL497	2.25
78S40	2.50
RC4195	1.50

COMPUTER COMPONENTS

CPUs

1802CE	6.50
2650A	10.50
6502	4.50
65C02-2MHz	12.00
6502A	6.50
6502B	8.00
6800	3.50
6802	3.50
6809	6.50
6809E	10.00
68B09	10.00
68B09E	12.00
68000-L8	36.00
8035	3.50
80C35	6.00
8039	4.20
80C39	7.00
8080A	9.50
8085A	3.00
80C85A	7.50
8086	22.00
8087-5	£120
8087-8	£160
8088	17.50
8741	15.00
8748	10.00
TMS1601	12.00
TMS9980	14.50
TMS9995	18.00
V20-8	12.00
V30-8	12.00
Z80	2.50
Z80A	2.90
Z80B	5.50
Z80H	7.50

SUPPORT DEVICES

2651	12.00
3242	8.00
3245	4.50
6520	3.00
6522	3.50
6522A	5.50
6532	4.80
6551A	6.00
6821	1.60
68B21	2.50
68040	3.75
68B40	8.00
6850	1.80
68B50	2.50
6852	2.50
6854	6.50
68B54	8.00
8154	8.50
8155	3.80
8156	3.80
8205	2.25
8212	2.00
8216	1.60
8224	POA
8226	4.25
8228	5.50
8237	6.50
8243	2.60
8250	12.00
8251A	3.25
8253C-5	3.50
8255AC-5	3.20
8256	18.00
8257C-5	54.00
8259C-5	4.00
8275	29.00
8279C-5	4.80
8282	4.00
8284	4.60
8287	3.80
8288	6.50
8755A	16.00

MEMORIES

2114-3	1.00
4116-2	1.50
4164-15	2.50
41256-15	2.00
41464-15	9.50
4416-15	3.00
5101-3	5.00
6116LP-15	6.50
62256	12.00
6810	2.50

PROMS

28L22	4.00
74S188	1.80
74S287	2.25
74S288	1.80
74S387	2.25
82S23	1.50
82S123	1.50
82S129	1.75

IBM AMSTRAD UPGRADES

8087-6	£75
8087-8	£120
8087-10	£175
80287-5	£160
80287-8	£190
8087-10	£225

EPROMs

2716-45	4.50
2732-45	4.50
2764-25	4.00
27C64	4.50
27128-25	4.80
27C256	5.50
27512	9.00
27513	18.00
27C128	5.50
27256	5.50

RS232

MAX232	7.50

CRT CONTROLLER

CRT5037	12.00
CRT6545	9.00
EF9365	32.00
EF9366	32.00
EF9367	36.00
EF9369	12.00
MC6845	6.50
MC6845SP	6.50
MC6847	6.50
SFF96364	8.00

INTERFACE ICs

ADC0808	10.00
AD561J	20.00
AM25S10	3.50
AM25LS2521	3.50
AM25LS2538	3.50
AM26LS31	1.20
AM26LS32	1.20
AM7910DC	25.00
DM8131	8.00
DP8304	4.50
DS3691	4.50
DS8830	1.40
DS8831	1.50
DS8832	1.50
DS8833	2.25
DS8836	1.50
DS8838	2.25
D7002	8.00
MC1488	0.60
MC1489	0.60
MC3446	2.50
MC3459	4.50
MCS3470	4.75
MC3480	8.50
MC3486	2.25
MC3487	2.25
MC4024	5.50
MC4044	5.50
MC6852	16.00
MC14411	7.50
MC14412	7.50
75107	0.90
75108	0.90
75109	1.20
75110	0.90
75112	1.60
75113	1.20
75114	1.40
75115	1.40
75121	1.40
75122	1.40
75150P	1.20
75154	1.20
75159	2.20
75160	5.00
75161	6.50
75162	7.50
75172	4.00
75182	0.90
75188	0.80
75189	0.80
75365	1.50
75450	0.80
75451	0.50
75452	0.50
75453	0.70
75454	0.70
75480	1.50
75491	0.65
75492	0.65
8T26	1.20
8T28	1.20
8T95	1.20
8T96	1.20
8T97	1.20
8T98	1.20
81LS95	1.40
81LS96	1.40
81LS97	1.40
81LS97	1.40
81LS98	1.40
88LS120	6.50
9602	3.00
9636A	1.80
9637AP	1.80
E	9.50
9638	1.80
9639	2.50

DISC CONTROLLER ICs

765A	10.00
6843	8.00
8272	10.00
FD1771	20.00
FD1791	20.00
FD1793	20.00
FD1797	22.00
WD1770	24.00
WD1691	15.00
WD2143	12.00
WD2793	27.00
WD2797	27.00

CHARACTER GENERATORS

RO32513UC	7.50
RO32513LC	7.00

TELETEXT DECODER

SAA5020	6.00
SAA5030	7.00
SAA5041	18.00
SAA5050	9.00

KEYBOARD DECODERS

74C922	5.00
74C923	6.00

BAUD RATE GENERATORS

MC14411	7.50
COM8116	6.50
4702B	7.50

UARTs

AY3-1015	3.00
AY51013P	3.00
COM8017	3.00
IM6402	4.50

MODULATORS

6MHz	3.75
8MHz	4.50

SOUND & VISION

12MHz	12.00

CRYSTALS

32.768KHz	1.00
1.8432MHz	2.25
2.00MHz	2.25
2.45760MHz(L)	2.00
2.45760MHz(S)	2.50
2.5MHz	2.50
3.276MHz	1.50
3.5795MHz	1.00
4.00MHz	1.50
4.194MHz	2.00
4.43MHz	1.00
4.9152MHz	2.50
5.00MHz	1.50
5.068MHz	1.75
6.00MHz	1.40
6.144MHz	1.40
7.00MHz	1.50
7.16MHz	1.75
8.00MHz	1.50
8.876MHz	1.75
10.00MHz	1.75
10.50MHz	2.50
10.70MHz	1.50
11.00MHz	3.00
12.00MHz

DUAL BEAM OSCILLOSCOPE

PART ONE BY JOHN BECKER

IT'S HERE AT LAST! THE DIY 'SCOPE

'It gave electronics a face – I could see what things were doing. It was like having a blindfold taken away', says your Editor of his first oscilloscope. Now – after many requests – PE has the tubes and the design for you to make your own.

Periodically, I am asked why PE does not publish an article on how to make your own oscilloscope. Well, we have in the past, but the last time was 1967. Recently, though, the basic problem has not been the designing of the electronic circuitry, but the inexpensive and reliable supply of the necessary cathode ray tube (crt). Since I last gave this answer as a published reply to one letter, Langrex Supplies have kindly offered to supply low cost tubes to interested readers.

I know that there are many of you who *are* interested in building your own scope, and others who would like to know the basic principles of how a scope works. Next to a multimeter, a scope is the most important piece of test gear that a serious electronics enthusiast should own. Indeed a scope used properly can in many instances be used instead of a multimeter.

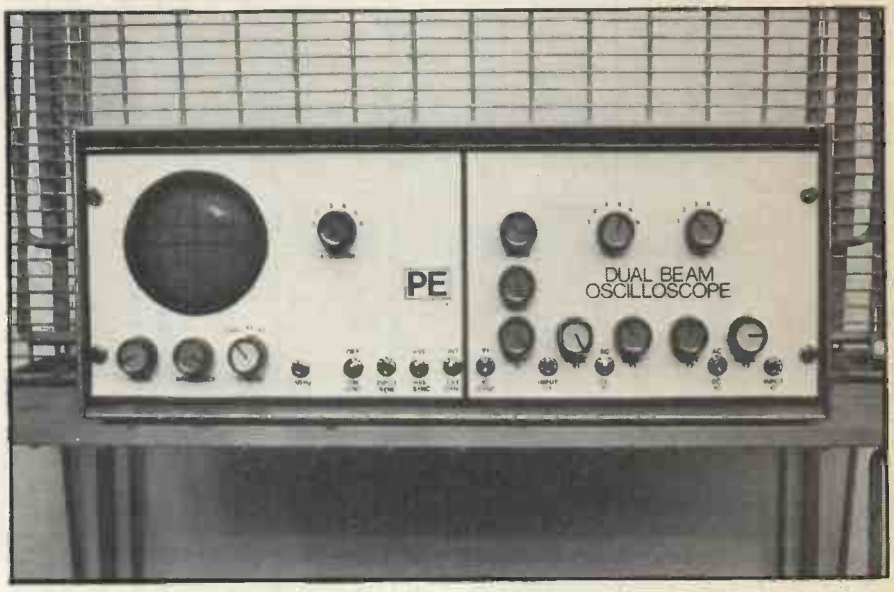

Front panel of the dual beam oscilloscope

HISTORICAL CONTEXT

When, as an amateur, I first started serious electronics, a scope was the first major project I ever built. At that time, in the late 50s, ex-government crts were readily and cheaply available. Buying one, I built up a very simple single-trace scope from the details given in the 1957 edition of *The Oscilloscope Book* by E.N. Bradley. I don't suggest you try to find a copy as I expect the book is long out of print, and in any case I doubt you could still get the parts.

Historically, though, I am sure that this book was of considerable importance and many amateurs from that era must have had their enthusiasm reinforced by constructing its contents. For me it gave electronics a face – I could *see* what things were doing. Previously, I could only try to imagine what was happening to electronic signals – it was like being blindfolded. With that scope the blindfold was taken away and electronic experimentation ceased to be a mere fumbling through cloaks of mystery.

With hindsight, it's remarkable that although the transistor was invented in 1947, most circuits available to amateurs in the late 50s still used valves (that scope had seven of them). Printed circuit boards, too, had yet to arrive for amateurs and components were still soldered back and forth across tag boards. Even Veroboard did not appear until about 1964 (the year PE started). Whereas today we think of circuits drawing only a few milliamps or less, currents of several amps were still considered normal.

That diy scope served me well for several years, until I was given an old Solatron – still valve driven, still built on tag boards, and still current hungry – no need for separate central heating with that machine switched on. Incidentally, it still works.

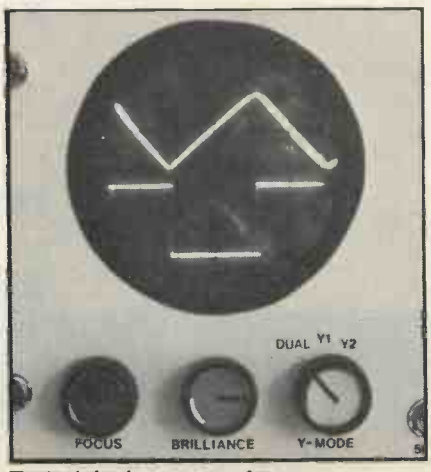

Typical dual trace waveforms.

FURTHER SCOPE

More sophisticated machines now grace my workshop, but such are beyond the pockets of most amateurs. So, knowing how much can be gained from building and using one's own scope, I am pleased to offer you the opportunity to do both. Here then is a description of a simple low cost diy scope, designed around semiconductors, on pcbs, and which doesn't significantly raise room temperatures. And, moreover, it has *two* traces – effectively it's a dual-beam machine.

I shall keep the description of basic scope principles to just the essentials as they apply to simple equipment using tubes of an electrostatic nature. For those who would like to know greater detail about various types of scope, I recommend you read *Oscilloscopes (How to Use Them, How They Work)* by Ian Hickman, published by Newnes Technical Books and available through the PE book service.

CATHODE RAY TUBE

The cathode ray tube is the device which displays the picture of the electrical waveforms under examination. Fig. 1 shows a simple schematic of the internal functional construction.

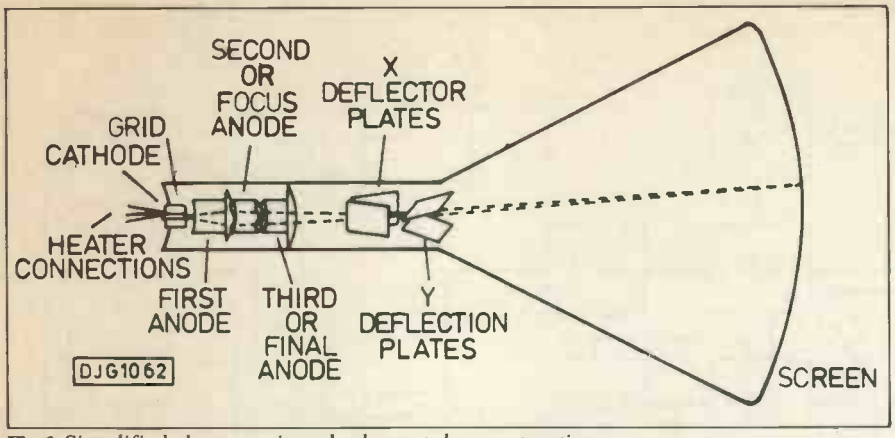

Fig.1 *Simplified electrostatic cathode ray tube construction.*

The crt consists of an evacuated glass tube with one end flared out into the screen area, and the other end having a ring of connecting pins. Within the tube are a series of plates which control the production, acceleration and deflection of an electron beam aimed at the screen. The screen is specially coated with a material which fluoresces under the impact of the electron beam.

In common with any thermionic valve, the crt has a heated cathode which emits a cloud of electrons. These flow towards a positively charged first anode, but can be impeded by the potential on a grid placed along their path, so allowing the picture brightness to be varied. The second anode also attracts the electrons, but its charge can be varied so that it behaves as a focusing control. The final anode is held at the same potential as the first anode, and further accelerates the electron flow.

Two pairs of additional plates, known as the X and Y plate pairs, are placed between the final anode and the screen and deflect the beam according to their applied potential. Positioned perpendicular to each other about the beam path, the X pair deflects horizontally, and the Y pair deflects vertically. Although the control potentials may differ for the two sets of plates, in most instances they can be treated interchangeably, the physical alignment of the tube determining the horizontal or vertical attributes. Having passed the deflection plates the beam continues on to hit the screen at the relevant position.

DEFLECTION

The way that the deflection plates function is shown in Fig. 2. The electron beam is negatively charged, and consequently it will be attracted by any plate that is positively charged, hence the way that the beam can be accelerated and focused by the anodes. Conversely, if a plate is negatively charged, the beam of electrons will be repelled by it. If the deflection plates have their charge balanced with respect to one another, the beam will not be deflected and will take a central course between the plates. Since the plates are in pairs, the beam can be moved to the left, for example, by positively charging the left hand plate, or by negatively charging the right hand plate. In a final design the plate control may be implemented by holding one plate of a pair at a constant potential while applying the signal charge to the other. Alternatively, both plates may be controlled by the signal in a push-pull mode.

Conventionally, the beam is repeatedly drawn across the screen face along the X axis, horizontally left to right. The voltage level to be analysed is displayed on the Y axis, upwards for positive-going potentials, and downwards for negative-going potentials. Fig. 3.

To produce and manipulate a beam across the screen we need three basic circuit blocks (Fig.4), a power supply, an

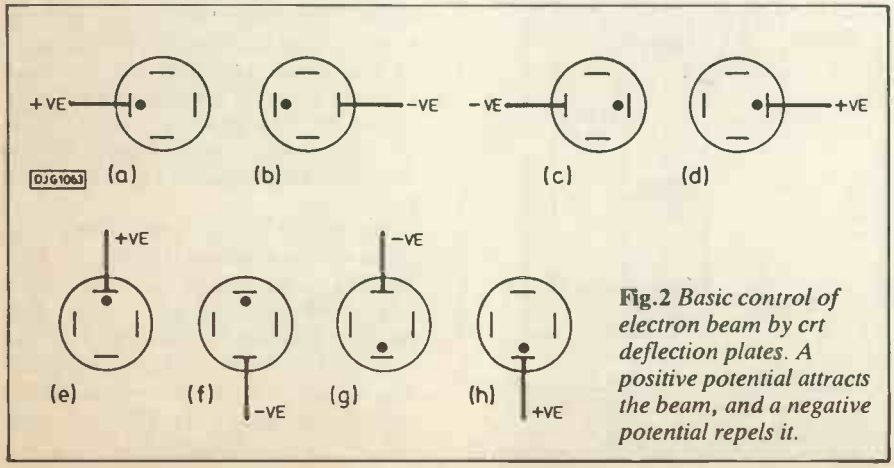

Fig.2 *Basic control of electron beam by crt deflection plates. A positive potential attracts the beam, and a negative potential repels it.*

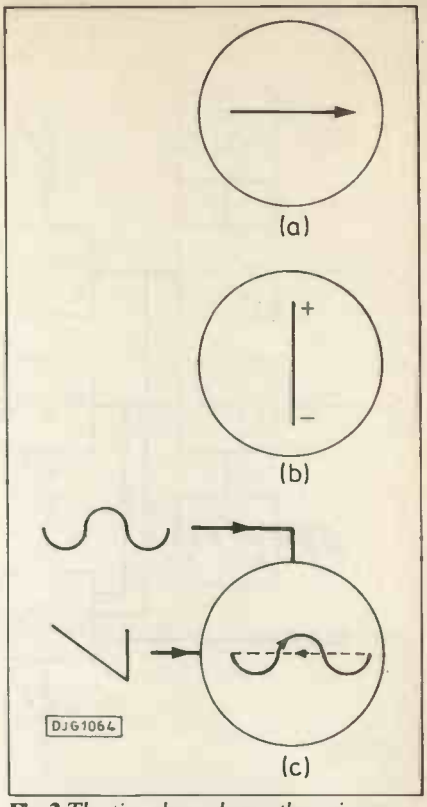

Fig.3 *The time base draws the primary beam deflection from left to right (A) the vertical deflection is controlled by the polarity of the applied potential (B). A ramp sets the horizontal deflection rate while the sampled signal modulates the vertical deflection (C).*

oscillator to repeatedly produce the horizontal trace, and a circuit to allow an input signal to be traced vertically. As we progress we shall see that we need to be able to do a few more things as well, such as vary the X-beam rate, modify the Y-beam amplitude, and to synchronise the start of the X-trace to particular points on the Y signal waveform. I shall also show how a single beam tube can be made to behave as though it has two beams so that two simultaneous input signals can be displayed.

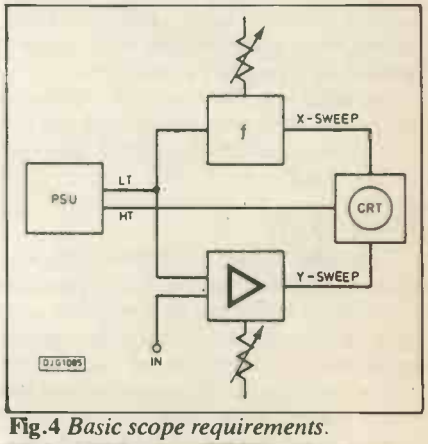

Fig.4 *Basic scope requirements.*

FACILITIES

The full facilities offered by this project are:

Two independent Y amplifiers with six switch-selectable level ranges providing

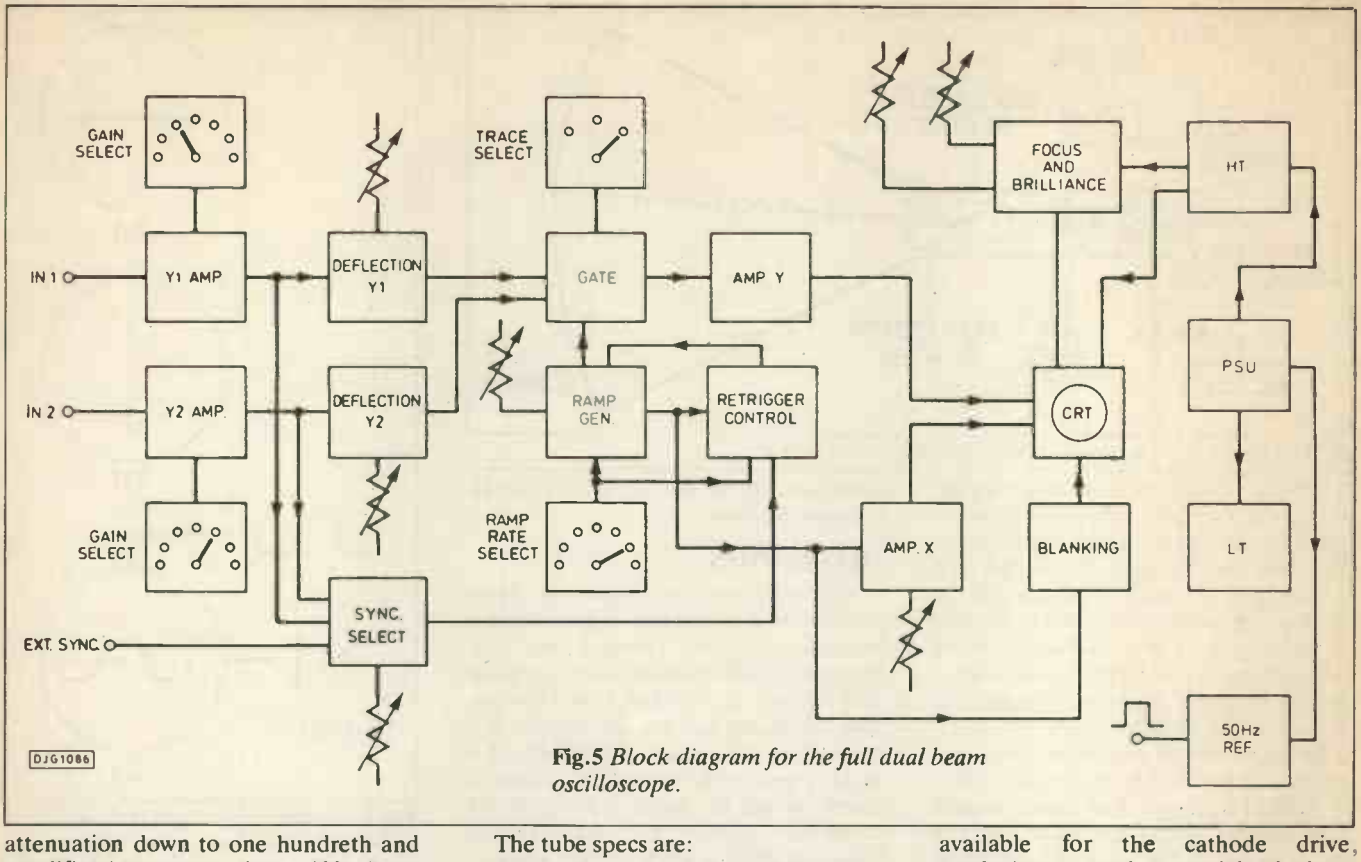

Fig.5 *Block diagram for the full dual beam oscilloscope.*

attenuation down to one hundreth and amplification up to times 100; intermediate fully variable control over level delivered to crt from zero to maximum; maximum display frequency greater than 1MHz; switchable ac–dc input selection; independent control of relative positions of both traces on the screen; switched selection between Y display modes of Y1 only, Y2 only, dual trace Y1 plus Y2, and Y2 to X.

X-amplifier with 6 switch-selectable rates from 0.05Hz to 20kHz, plus variable fine-tuning rate control, and a control for varying horizontal relative position of trace across the screen.

Switched synchronisation selection between both Y amplifiers, additionally switchable between positive and negatively triggered sync; variable control over sync trigger level; switchable sync 'bright-line' on-off; additional input for external sync.

Separate focus and brilliance controls; output for 50Hz 1Vp-p reference signal.

The basic full function block diagram is shown in Fig. 5.

TUBE TYPE

The tube around which this scope has been designed is the DG7-31. A similar tube, the DG7-32 is also suitable and may be substituted without circuit modification. There is no significant difference between the specifications for either tube. Both require the same control and psu voltages and the connections to the B12A valve base are identical. Note that when buying the tube you must also buy the base as a separate item. Fig. 6 shows the physical dimensions of the tube.

The tube specs are:

Screen diameter = 7cm (3in) with a full scan display area in both directions. Deflection factors = X 21V cm, Y 37V cm. Heater = 6.3Vac at 300mA.

Operating voltages with reference to the cathode = anodes A1 and A3 400V min to 800V max, focus electrode A2 0V to 200V max, control grid −200V to +2V max.

POWER SUPPLY

To keep the overall power supply requirements within a reasonable degree of simplicity, the high tension voltage needed by the tube is derived from two sources. With reference to the ground line, +250V is supplied to anodes A1 and A3, and approximately −350V is

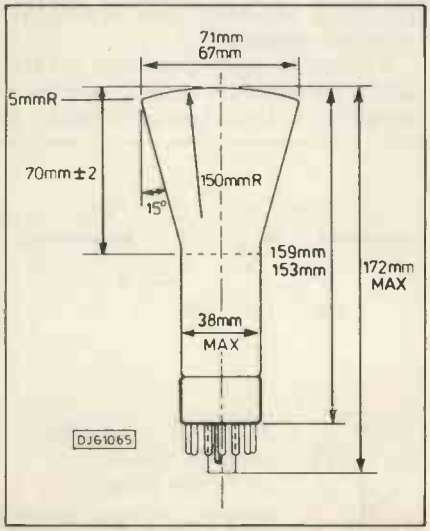

Fig.6 *Dimensions of the DG7-31 and DG7-32 oscilloscope tubes.*

available for the cathode drive, producing a total potential of about 600V across the tube.

In Fig. 7, transformer T1 has three secondary windings, one of 250Vac and two of 6.3Vac, (2 × 6V will also be ok). The 250Vac winding, which is used purely as a mains isolation winding, has its output rectified by D13 and smoothed by C26. TR7 is then biased by R52 and VR11, the latter adjusting the bias so that TR7 delivers +250Vdc at its emitter. C28 serves to minimise ripple on the bias voltage, and R53 provides a path for leakage to ground following power switch off. In addition to feeding anodes A1 and A3, the output of TR7 also supplies power to the deflection drive circuits discussed later.

The 250Vac output of T1 is additionally rectified by D14 to produce a negative supply of about −350Vdc smoothed by C27 and C29 in parallel. Leakage to ground is normally available through the chain of R55, VR13 and VR14. The latter varies the cathode potential and thus controls the brilliance of the screen trace. VR13 is the focus control, applying a variable voltage to anode A2. The grid is normally tied to the negative line via D17 and R54. The function of the input via C30 will be seen later.

The heater voltage is taken from one of the 6.3Vac windings. The other 6.3Vac winding is the source for producing a fully stabilised ±5V split supply, D15 provides positive rectification, C31 and C32 offer smoothing, and IC7 regulates the voltage at +5V. The −5V supply is similarly produced via D16, C34 and IC8.

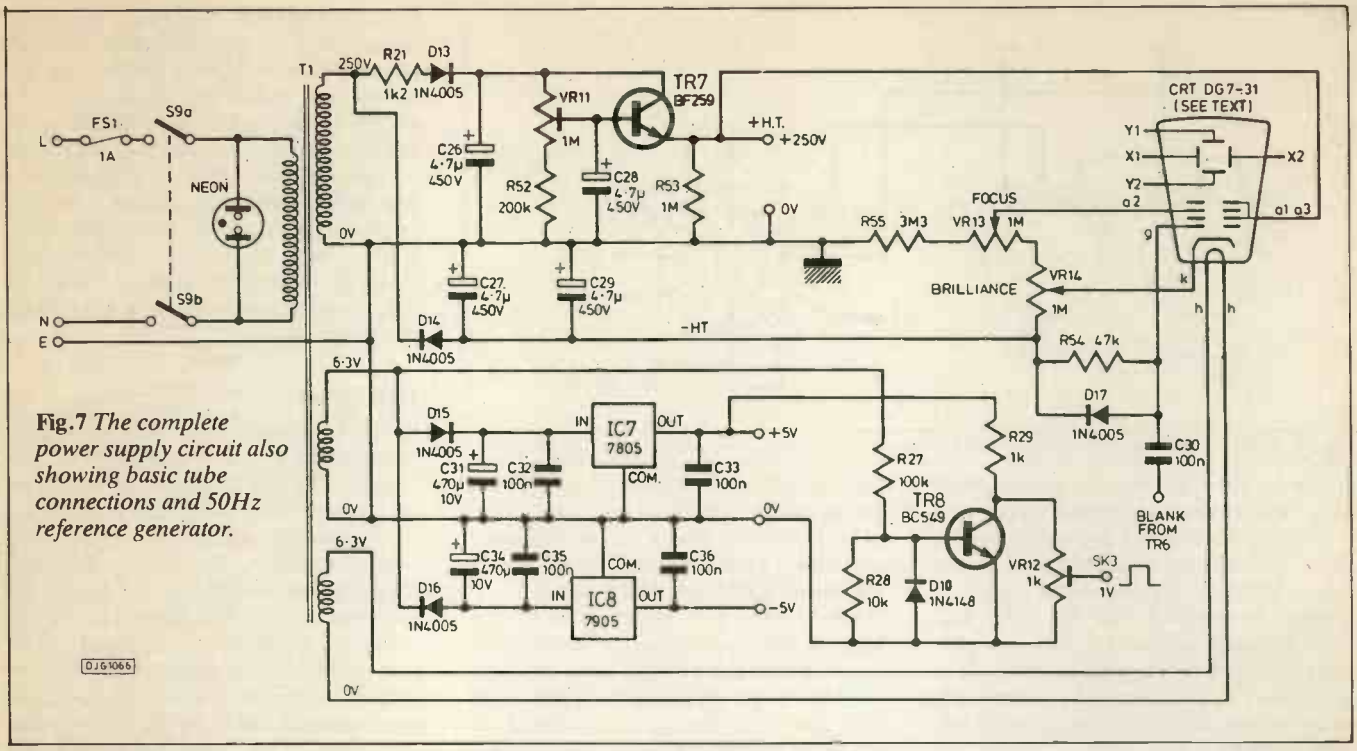

Fig.7 *The complete power supply circuit also showing basic tube connections and 50Hz reference generator.*

50Hz REFERENCE

The remaining circuitry associated with the latter transformer winding is used to produce a 50Hz squarewave reference signal. Taking the 50Hz ac sinewave from the winding via R27 it triggers TR8 on and off, with D9 inhibiting the negative portion of the signal. As TR8 opens and closes it generates a squarewave output at the junction of the collector load resistor R27, and the potential divider VR12. The wiper of VR12 can be adjusted to deliver a squarewave output variable up to a peak swing of 2.5V.

POWER SUPPLY PCB

AT ALL TIMES BEWARE OF MAINS AND OTHER HIGH VOLTAGES WHEN CHECKING AND SETTING-UP THE SCOPE CIRCUITS. REMEMBER THAT CAPACITORS MAY BRIEFLY RETAIN THEIR CHARGE FOLLOW-ING MAINS SWITCH-OFF.

The component layout for the full power supply circuit is shown in Fig. 8, and Fig. 9 shows the mains and transformer connections.

It is essential to have the psu working before any of the other circuits are attached. Assemble the components on the board and *fully* check the joins, the polarity of the electrolytic capacitors and the correct orientation of all the semiconductors.

Now temporarily connect R55 to the negative ht line (−350V). Set VR11 so that its wiper is at the end closest to R52. With a meter set on a range of about 400Vdc switch on the supply and check that about +350V is present at the junction of D13 and C26, and that about −350Vdc is at the junction of D14 and C27. As there is yet no significant load on

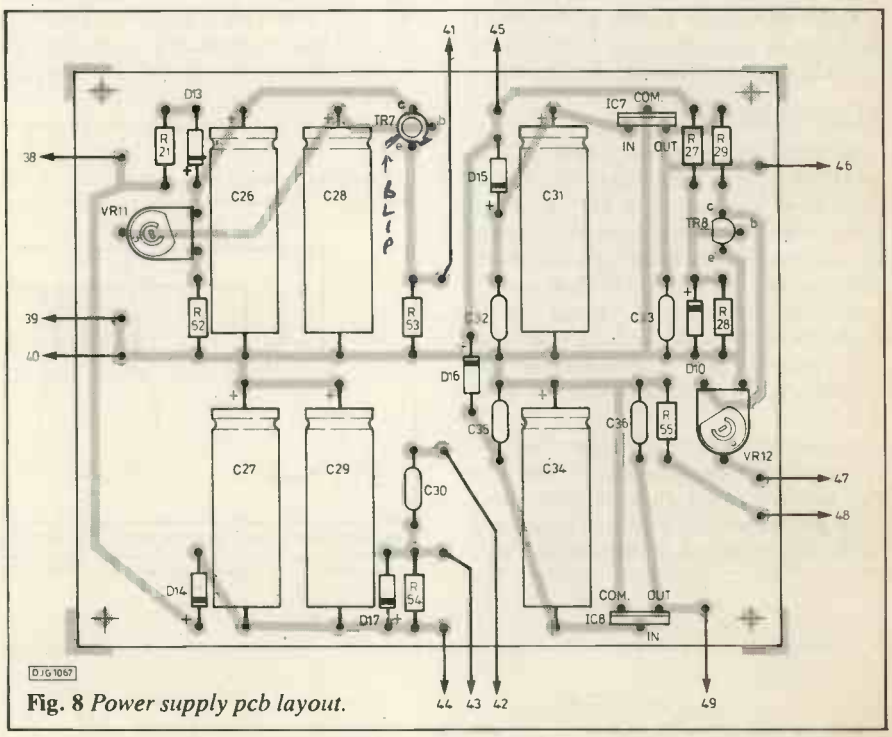

Fig. 8 *Power supply pcb layout.*

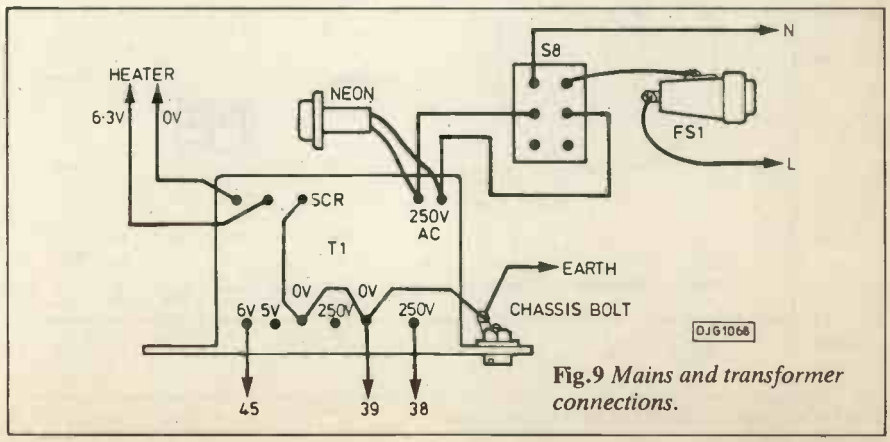

Fig.9 *Mains and transformer connections.*

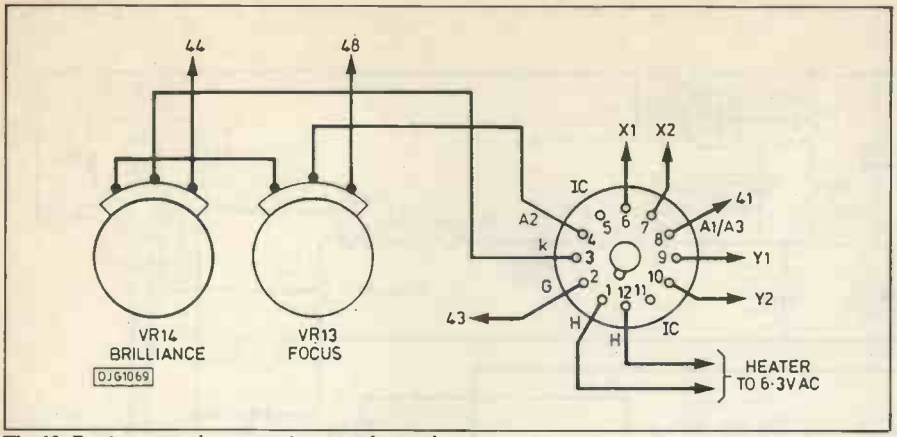

Fig.10 *Basic control connections to the crt base.*

the ht outputs, the actual voltages found may be somewhat higher than this.

Switch off, connect the meter across the +250Vdc output and 0V, then slowly adjust VR11 until a reading of +250V is shown. Now check that the +5V and −5V voltages are correct. You can also roughly check that the 50Hz reference is functional by switching the meter to a range of about 10Vac and monitoring the wiper of VR12.

Once the psu is known to be operational you can move straight on to checking out the functioning of the tube.

TUBE TESTING

Remove the temporary link to R55 and connect R55, VR13 and VR14 so that they form a chain as in Fig. 10. Then solder wires to the tube base (unattached to the tube) for the heater, grid, cathode and anodes, and connect to their correct control points. When all connections are made carefully push the tube base onto the pins at the end of the tube – not too hard and not too far, just enough to hold it there.

Switch on while watching the base end of the tube. At the moment of switch on the heater should glow brightly for a brief instant and then drop in brightness as it heats up. Look at the screen end of tube and after a few moments you should see a green spot glowing somewhere near the centre. Check that its brilliance and focus can be adjusted by the controls VR14 and VR13. Switch off again.

Now, take four rotary pots of the highest value you have, preferably 1M lin, and wire them to the tube base and the positive power supply as in Fig. 11. In this test role the pots are used to manually adjust the deflection voltages on the X and Y pairs of plates. Values as low as 100k lin should still be ok, though as they are wired in parallel, TR7 may get a bit warm under the load, (but don't touch it to find out while the power is on).

Switch on once more and look at the screen. Probably the spot will have disappeared as the deflection voltages from the pots could have shifted it off the screen area. Adjusting the pots in turn should soon bring it back onto screen, and also confirm how varying potentials on the plates will deflect the beam path. You will probably also see that a sharper, brighter spot can be produced when VR13 and VR14 are readjusted, especially when the wipers of the test pots are more towards the positive ends of their tracks.

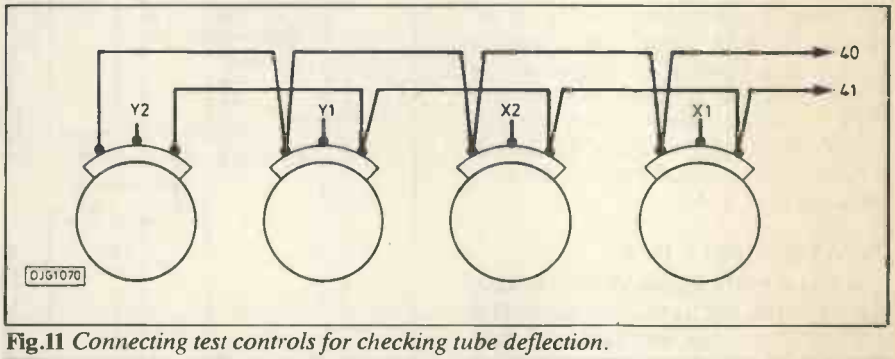

Fig.11 *Connecting test controls for checking tube deflection.*

HOUSING

CASE 406mm x 196 x 152

The prototype scope was assembled inside a metal case measuring 16 x 7.75 x 6 inches (l x w x h). Since the time base and y-amp pcbs are fixed behind the front panel by means of pcb-mounted control switches, the drilling measurements are determined by the size of the pcbs and the switch mounting positions.

Fig. 12 shows the front panel layout and positional measurements, all in inches – I'm sure you've got an inches ruler *somewhere!* Have an enlargement photocopy made of this layout and glue it down to the front panel, taking advantage of its control legends. A sheet of self-adhesive clear film, available from stationers, can be placed over the print to give protection.

Stationers may also sell a draftsman's transparent plastic grid (1 cm squares) to

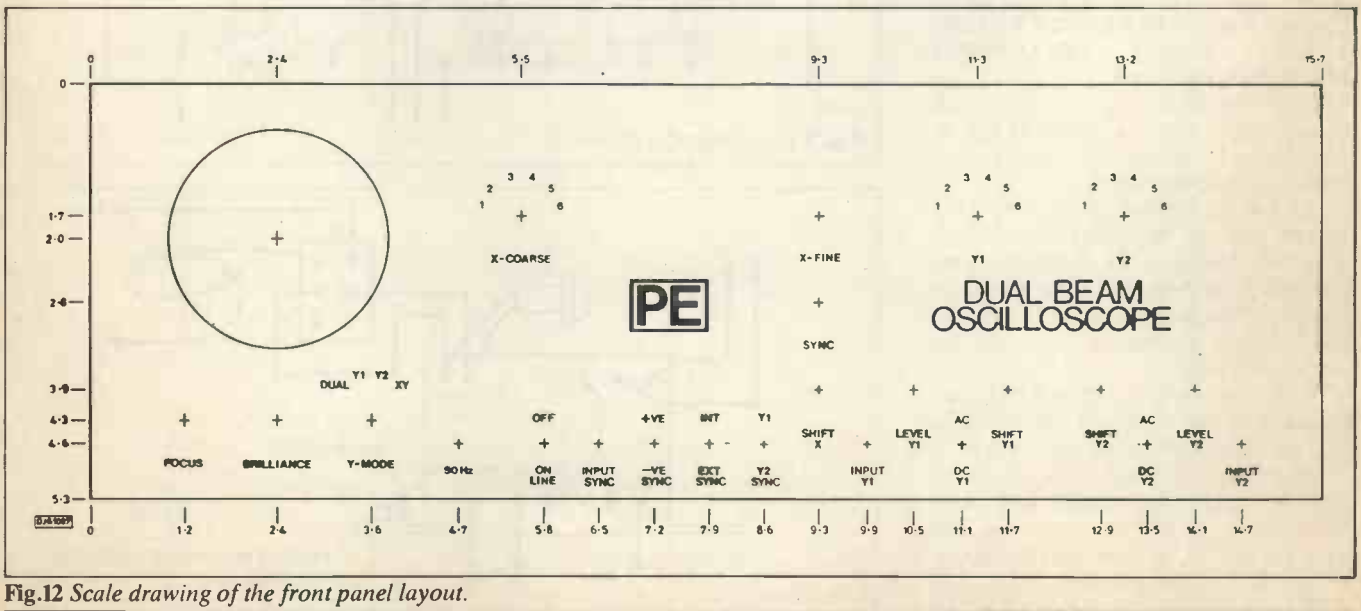

Fig.12 *Scale drawing of the front panel layout.*

COMPONENTS PSU BOARD

RESISTORS

R21	1k2 ½W
R27	100k
R28	10k
R29	1k
R52	200k
R53	1M
R54	47k
R55	3M3

All resistors ¼W 5% cf unless stated.

CAPACITORS

C26–C29	4μ7 450V electrolytic (4 off)
C30,C32,C33, C35,C36	100n polyester (5 off)
C31,C34	470μ 10V electrolytic (2 off)

POTENTIOMETERS

VR11	1M skeleton
VR12	1k skeleton
VR13,VR14	1M lin mono rotary (2 off)

SEMICONDUCTORS

D10	1N4148
D13–D17	1N4005 (5 off)
TR7	BF259
TR8	BC549
IC7	7805
IC8	7905

SWITCH

S9	mains dpdt

TRANSFORMER MAPLIN XP27E

T1	250Vac 50mA min, 6.3Vac 300mA min, 6.3Vac 50mA min.

MISCELLANEOUS

pcb clips (4 off), knobs (2 off), mains neon, Phonosonics pcb 290c, 3.5mm jack socket, 1A fuse and panel fuse holder, case 16 x 7.75 x 6 inches (see text), cable clamping grommet, scope tube type DG7-31 (see text).
A suitable transformer is available from Barrie Electronics, type Y1. (see advert)

place over the front of the tube. Otherwise, carefully rule thin black lines on a heavy-duty clear plastic film.

If you don't have a 2.8 inch diameter hole cutter for the tube face cut-out, drill out the perimeter with a series of small holes and then file down the edges. If possible, line the screen hole with a length of grommet strip, or use the sheathing from a plastic mains cable, gluing it in place.

The mains input lead, switch and fuse are secured to the rear panel. Be sure to use a cable-clamping grommet for the mains lead hole. I omitted to drill a hole for the mains neon, but I recommend that you use one, mounting it at the top right of the front panel.

Two 3.5mm jack sockets were used as the Y-amp input points, in the expectation that most readers will probably make their own probes. BNC

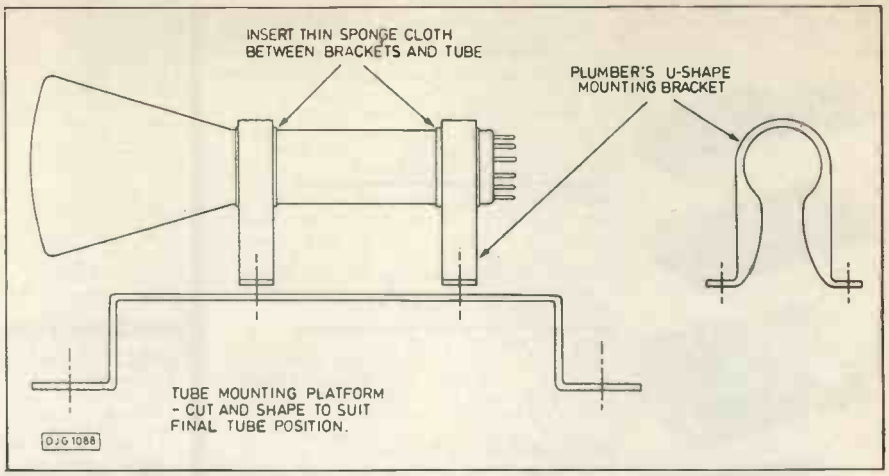

Fig.13 *Tube mounting details.*

type sockets may be substituted if commercially-made probes are to be used.

The tube is mounted on a raised platform, as in Fig. 13, using two flanged U-shaped plastic brackets. Only cut and bend the platform to shape after checking bracket dimensions and the tube hole position. The brackets were bought from a plumbing hardware store and are of the type used to secure drain pipes. Their diameter is just a little over the tube's body diameter of 1.5 inches. A very thin kitchen sponge, or similar, should be cut to size and inserted between the tube and the brackets to give good holding stability without excessive pressure.

DO NOT TIGHTEN DOWN THE BRACKETS TOO MUCH FOR FEAR OF BREAKING THE TUBE. ON NO ACCOUNT SHOULD THE TUBE SOCKET BE USED FOR SECURING THE TUBE IN PLACE.

To prevent the tube base tags from shorting to the rear of the box, either use the cap supplied, or put insulating tape on the inside back panel behind the tube. Mount the transformer at the far right back corner, as far from the tube as possible to avoid magnetic fields interfering with the electron beam deflection. The power supply pcb should be mounted on the base of the box alongside the tube mount. Keep all leads as short as is reasonable (but long enough to allow ready maintenance access), and draw them into neat harnesses.

ALTERNATIVE HOUSING

A box that is more deep than wide may be substituted if a more compact front panel is preferred. In this situation, replace the pcb mounted switches with normal panel mounting types. Solder the associated components directly to the switches (to minimise interference that could be caused by many leads between switches and components). Then mount all pcbs on the base of the box. Place the transformer as far behind the tube as possible, rotating its position until minimum interference with the tube plates results. If significant interference still occurs in this alternative layout, the use of a mu-metal screen around the tube may be beneficial. Langrex Supplies, the tube suppliers, will advise on the availability of these screens. It may also be necessary to use screened leads for the signal routings in this altered layout. No screening of any sort was found necessary with the recommended layout as used in the prototype.

That concludes the psu and tube checking. We shall proceed next month to finding out how to draw a horizontal trace at varying rates.

The address from which to buy the tube and base is: Langrex Supplies Ltd, Climax House, Fallsbrook Road, London, SW16 6ED, Tel: 01-648 1166. PE

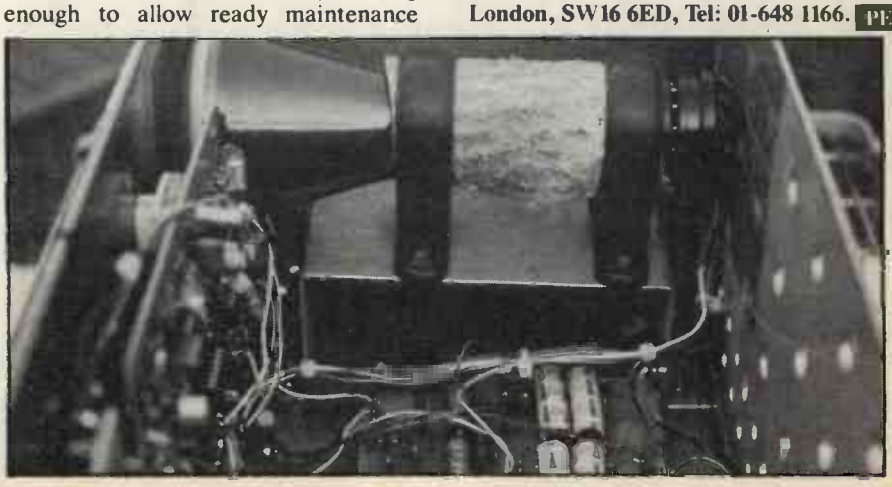

OMP POWER AMPLIFIER MODULES

★ PRICES INCLUDE V.A.T. ★ PROMPT DELIVERIES ★ FRIENDLY SERVICE ★ LARGE S.A.E. 28p STAMP FOR CURRENT LIST

OMP POWER AMPLIFIER MODULES

Now enjoy a world-wide reputation for quality, reliability and performance at a realistic price. Four models available to suit the needs of the professional and hobby market i.e. Industry, Leisure, Instrumental and Hi-Fi. etc. When comparing prices, NOTE all models include Toroidal power supply, Integral heat sink, Glass fibre P.C.B. and Drive circuits to power compatible Vu meter. Open and short circuit proof. **Supplied ready built and tested.**

OMP100 Mk II Bi-Polar Output power 110 watts R.M.S. into 4 ohms, Frequency Response 15Hz - 30KHz —3dB, T.H.D. 0.01%, S.N.R. —118dB, Sens. for Max. output 500mV at 10K, Size 355 × 115 × 65mm. **PRICE £33.99 + £3.00 P&P.**

OMP/MF100 Mos-Fet Output power 110 watts R.M.S. into 4 ohms, Frequency Response 1Hz - 100KHz —3dB, Damping Factor 80, Slew Rate 45V/uS, T.H.D. Typical 0.002%, Input Sensitivity 500mV, S.N.R. —125dB. Size 300 × 123 × 60mm. PRICE **PRICE £39.99 + £3.00 P&P.**

OMP/MF200 Mos-Fet Output power 200 watts R.M.S. into 4 ohms, Frequency Response 1Hz - 100KHz —3dB, Damping Factor 250, Slew Rate 50V/uS, T.H.D. Typical 0.001%, Input Sensitivity 500mV, S.N.R. —130dB. Size 300 × 150 × 100mm. PRICE **PRICE £62.99 + £3.50 P&P.**

OMP/MF300 Mos-Fet Output power 300 watts R.M.S. into 4 ohms, Frequency Response 1Hz - 100KHz —3dB, Damping Factor 350, Slew Rate 60V/uS, T.H.D. Typical 0.0008%, Input Sensitivity 500mV, S.N.R. —130dB, Size 330 × 147 × 102mm. PRICE **PRICE £79.99 + £4.50 P&P.**

NOTE: Mos-Fets are supplied as standard (100KHz bandwidth & Input Sensitivity 500mV). If required, P.A. version (50KHz bandwidth & Input Sensitivity 775mV). Order — Standard or P.A.

Vu METER Compatible with our four amplifiers detailed above. A very accurate visual display employing 11 L.E.D. diodes (7 green, 4 red) plus an additional on/off indicator. Sophisticated logic control circuits for very fast rise and decay times. Tough moulded plastic case, with tinted acrylic front. Size 84 × 27 × 45mm. **PRICE £8.50 + 50p P&P.**

LOUDSPEAKERS 5" to 15" up to 400 WATTS R.M.S.

Cabinet Fixing in stock. Huge selection of McKenzie Loudspeakers available including Cabinet Plans. Large S.A.E. (28p) for free details.

POWER RANGE

8" 50 WATT R.M.S. Hi-Fi/Disco.
20 oz magnet 1½" ally voice coil. Ground ally fixing escutcheon. Res. Freq. 40Hz. Freq. Resp. to 6KHz. Sens. 92dB. PRICE £10.99. Available with black grille £11.99. P&P £1.50 ea.

12" 100 WATT R.M.S. Hi-Fi/Disco
50 oz magnet. 2" ally voice coil. Ground ally fixing escutcheon. Die cast chassis. White cone. Res. Freq. 25Hz. Freq. Resp. to 4KHz. Sens. 95dB. PRICE £28.60 + £3.00 P&P ea.

McKENZIE

12" 85 WATT R.M.S. C1285GP Lead Guitar/Keyboard/Disco.
2" ally voice coil. Ally centre dome. Res. Freq. 45Hz. Freq. Resp. to 6·5KHz. Sens. 98dB. PRICE £29.99 + £3.00 P&P ea.

12" 85 WATT R.M.S. C1285TC P.A./Disco 2" ally voice coil. Twin cone.
Res. Freq. 45Hz. Freq. Resp. to 14KHz. PRICE £31.49 + £3.00 P&P ea.

15" 150 WATT R.M.S. C15 Bass Guitar/Disco.
3" ally voice coil. Die-cast chassis. Res. Freq. 40Hz. Freq. Resp. to 4KHz. PRICE £57.87 + £4.00 P&P ea.

10" 60 WATT R.M.S. 1060GP Gen. Purpose/Lead Guitar/Keyboard/Mid. P.A.
2" voice coil. Res. Freq. 75Hz. Freq. Resp. to 7·5KHz. Sens. 99dB. PRICE £19.99 + £2.00 P&P.

10" 200 WATT R.M.S. C10200GP Guitar/Keyboard/Disco.
2" voice coil. Res. Freq. 45Hz. Freq. Resp. to 7KHz. Sens. 101dB. PRICE £44.76 + £3.00 P&P.

15" 200 WATT R.M.S. C15200 High Power Bass.
Res. Freq. 40Hz. Freq. Resp. to 5KHz. Sens. 101dB. PRICE £62.41 + £4.00 P&P.

15" 400 WATT R.M.S. C15400 High Power Bass.
Res. Freq. 40Hz. Freq. Resp. to 4KHz. Sens. 102dB. PRICE £89.52 + £4.00 P&P.

WEM

5" 70 WATT R.M.S. Multiple Array Disco etc.
1" voice coil. Res. Freq. 52Hz. Freq. Resp. to 5KHz. Sens. 89dB. PRICE £22.00 + £1.50 P&P. ea.

8" 150 WATT R.M.S. Multiple Array Disco etc.
1" voice coil. Res. Freq. 48Hz. Freq. Resp. to 5KHz. Sens. 92dB. PRICE £32.00 + £1.50 P&P ea.

10" 300 WATT R.M.S. Disco/Sound re-enforcement etc.
1½" voice coil. Res. Freq. 35Hz. Freq. Resp. to 4KHz. Sens. 92dB. PRICE £36.00 + £2.00 P&P ea.

12" 300 WATT R.M.S. Disco/Sound re-enforcement etc.
1½" voice coil. Res. Freq. 35Hz. Freq. Resp. to 4KHz. Sens. 94dB. PRICE £47.00 + £3.00 P&P ea.

SOUNDLAB (Full Range Twin Cone)

5" 60 WATT R.M.S. Hi-Fi/Multiple Array Disco etc.
1" voice coil. Res. Freq. 63Hz. Freq. Resp. to 20KHz. Sens. 86dB. PRICE £9.99 + £1.00 P&P ea.

6½" 60 WATT R.M.S. Hi-Fi/Multiple Array Disco etc.
1" voice coil. Res. Freq. 56Hz. Freq. Resp. to 20KHz. Sens. 89dB. PRICE £10.99 + £1.50 P&P ea.

8" 60 WATT R.M.S. Hi-Fi/Multiple Array Disco etc.
1¼" voice coil. Res. Freq. 38Hz. Freq. Resp. to 20KHz. Sens. 89dB. PRICE £12.99 + £1.50 P&P ea.

10" 60 WATT R.M.S. Hi-Fi/Disco etc.
1¼" voice coil. Res. Freq. 35Hz. Freq. Resp. to 15KHz. Sens. 89dB. PRICE £16.49 + £2.00 P&P.

PANTEC HOBBY KITS.

Proven designs including glass fibre printed circuit board and high quality components complete with instructions.

FM MICROTRANSMITTER (BUG) 90/105MHz with very sensitive microphone. Range 100/300 metres. 57 x 46 x 14mm (9 volt) Price: £8.62 + 75p P&P.

3 WATT FM TRANSMITTER 3 WATT 85/115MHz varicap controlled professional performance. Range up to 3 miles 35 x 84 x 12mm (12 volt) Price: £14.49 + 75p P&P.

SINGLE CHANNEL RADIO CONTROLLED TRANSMITTER/RECEIVER 27MHz. Range up to 500 metres. Double coded modulation. Receiver output operates relay with 2amp/240 volt contacts. Ideal for many applications. Receiver 90 x 70 x 22mm (9/12 volt). Price: £17.82. Transmitter 80 x 50 x 15mm (9/12 volt). Price: £11.29. P&P + 75p each. S.A.E. for complete list.

3 watt FM Transmitter

VISA

POSTAL CHARGES PER ORDER £1.00 minimum. OFFICIAL ORDERS WELCOME, SCHOOLS, COLLEGES, GOVERNMENT BODIES, ETC. PRICES INCLUSIVE OF V.A.T. SALES COUNTER VISA/ACCESS/C.O.D. ACCEPTED.

BURGLAR ALARM

IDEAL for Workshops, Factories, Offices, Home, etc. Supplied ready built.

Better to be 'Alarmed' than terrified.
Thandar's famous 'Minder' Burglar Alarm System. Superior microwave principle. Supplied as three units, complete with interconnection cable. **FULLY GUARANTEED.**
Control Unit — Houses microwave radar unit, range up to 15 metres adjustable by sensitivity control. Three position, key operated facia switch — off — test — armed 30 second exit and entry delay.
Indoor alarm — Electronic swept freq. siren 104dB output.
Outdoor Alarm — Electronic swept freq. siren 98dB output. Housed in a tamper-proof heavy duty metal case.
Both the control unit and outdoor alarm contain rechargeable batteries which provide full protection during mains failure. Power requirement 200/260 Volt AC 50/60Hz. Expandable with door sensors, panic buttons etc. Complete with instructions.

SAVE £138.00 Usual Price £228.85
BKE's PRICE £89.99 + £4.00 P&P
? Why buy a collection of self-assembly boards!

OMP LINNET LOUDSPEAKERS

The very best in quality and value. Made specially to suit todays need for compactness with high sound output levels. Finished in hard wearing black vynide with protective corners, grille and carry handle. All models 8 ohms. Full range 45Hz - 20KHz. Size 20" × 15" × 12". Watts R.M.S. per cabinet. Sensitivity 1W 1mtr dB.

OMP 12-100 Watts 100dB. Price £149.99 per pair.
OMP 12-200 Watts 102dB. Price £199.99 per pair.
Delivery Securicor £8.00 per pair.

OMP 19" STEREO RACK AMPS

Professional 19" cased Mos-Fet stereo amps. Used the World over in clubs, pubs, discos etc. With twin Vu meters, twin toroidal power supplies, XLR connections. MF600 Fan cooled. Three models (Ratings R.M.S. into 4ohms). Input Sensitivity 775mV

MF200 (100 + 100)W. £169.00
MF400 (200 + 200)W. £228.85
MF600 (300 + 300)W. £322.00

Securicor Delivery £10.00

1 K-WATT SLIDE DIMMER

- ★ Control loads up to 1Kw
- ★ Compact Size 4⅜" × 1" × 2½"
- ★ Easy snap in fixing through panel/cabinet cut out
- ★ Insulated plastic case
- ★ Full wave control using 8 amp triac
- ★ Conforms to BS800
- ★ Suitable for both resistance and inductive loads. Innumerable applications in industry, the home, and disco's, theatres etc.

PRICE £13.99 - 75p P&P

BSR P295 ELECTRONIC TURNTABLE

- ★ Electronic speed control 45 & 33⅓ r.p.m.
- ★ Plus Minus variable pitch control
- ★ Belt driven
- ★ Aluminium platter with strobed rim
- ★ Cue lever
- ★ Anti skate (bias device)
- ★ Adjustable counter balance
- ★ Manual arm
- ★ Standard ½" cartrige fixings
- ★ Supplied complete with cut out template
- ★ D.C. Operation 9-14v D.C. 65mA

Price £36.99 — £3.00 P&P.

ADC Q4 mag. cartridge for above. Price £4.99 ea. P&P 50p

PIEZO ELECTRIC TWEETERS MOTOROLA

Join the Piezo revolution. The low dynamic mass (no voice coil) of a Piezo tweeter produces an improved transient response with a lower distortion level than ordinary dynamic tweeters. As a crossover is not required these units can be added to existing speaker systems of up to 100 watts (more if 2 put in series). **FREE EXPLANATORY LEAFLETS SUPPLIED WITH EACH TWEETER.**

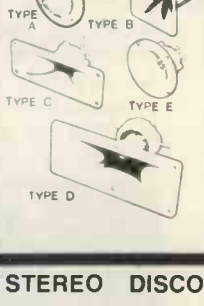

TYPE 'A' (KSN2036A) 3" round with protective wire mesh, ideal for bookshelf and medium sized Hi-fi speakers. Price £4.90 each + 40p P&P.
TYPE 'B' (KSN1005A) 3½" super horn. For general purpose speakers, disco and P.A. systems etc. Price £5.99 each + 40p P&P.
TYPE 'C' (KSN6016A) 2" × 5" wide dispersion horn. For quality Hi-fi systems and quality discos etc. Price £6.99 each + 40p P&P.
TYPE 'D' (KSN1025A) 2" × 6" wide dispersion horn. Upper frequency response retained extending down to mid range (2KHz). Suitable for high quality Hi-fi systems and quality discos. Price £9.99 each + 40p P&P.
TYPE 'E' (KSN1038A) 3¾" horn tweeter with attractive silver finish trim. Suitable for Hi-fi monitor systems etc. Price £5.99 each + 40p P&P.
LEVEL CONTROL Combines on a recessed mounting plate, level control and cabinet input jack socket 85 × 85 mm. Price £3.99 + 40p P&P.

STEREO DISCO MIXER

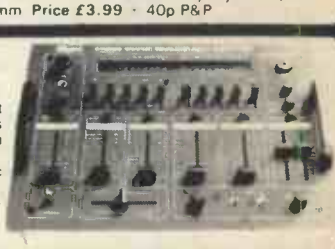

STEREO DISCO MIXER with 2 × 5 band L & R graphic equalisers and twin 10 segment L.E.D. Vu Meters. Many outstanding features. 5 Inputs with individual faders providing a useful combination of the following —
3 Turntables (Mag), 3 Mics, 4 Line plus Mic with talk over switch. Headphone Monitor. Pan Pot L & R. Master Output controls. Output 775mV. Size 360 × 280 × 90mm.
Price £134.99 — £3.00 P&P.

B. K. ELECTRONICS Dept PE

UNIT 5, COMET WAY, SOUTHEND-ON-SEA, ESSEX. SS2 6TR TEL: 0702-527572

SUBMARINE CABLES

PART TWO BY MIKE SANDERS

CANTATA FOR A GOLDEN AGE

The age of marine coax draws to a close, but the era of multi-megahertz optic cabling will rule the waves for future trans-ocean telecoms.

CANTAT 2, laid in 1974 is classed as an early system. The division is purely arbitrary. Among the 'newer' cables ANZCAN, SEA–ME–WE, TAT 7, TAT 8 and Belgium 5 will be described briefly. TAT 8 and Belgium 5 are optical fibre systems which end the golden age of coaxial cable. Future cables of any length are also likely to be optical fibre. The 14MHz and 45MHz systems will also be described.

CANTAT 2

This was laid by the cable ship Mercury, chartered by the Post Office from Cable and Wireless. Mercury returned to Southampton four times to reload with cable. The repeaters were spliced into the cables and a linear engine paid out both cable and the torpedo shaped repeater. The ship slowed to five knots while laying the repeater but before the linear engine was developed, the ship had to slow to 1.5 knots.

Mercury used a navigation system called Hydroplot which can locate the ship's position to an accuracy of 300 feet. Hydroplot is a navigation system using US Navy satellites.

The repeaters are spaced at six mile intervals and contain a total of 2,800 transistors which were manufactured under clinical conditions. Even the air to these rooms is filtered and operators wear hats, gloves and overalls. Gold plated surfaces are often used to give perfect mechanical contact and prevent surfact corrosion.

Only about 20% of the transistors manufactured are actually used. The rest are put on long term tests or tested to destruction. In this instance 18,000 additional transistors were tested. A typical ageing curve for a component is the bath tub curve of Fig. 12.

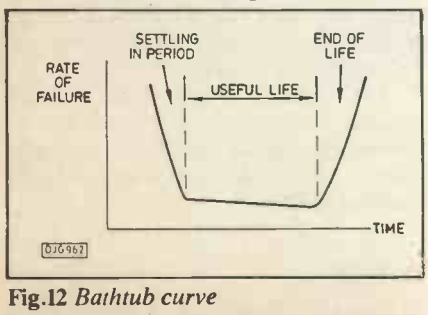

Fig.12 *Bathtub curve*

Submersible cable trencher "Sea-Dog" being lowered. Reproduced by kind permission of British Telecom.

The repeaters are sealed in a brass cylinder containing dry nitrogen which is an inert gas. The cylinder is then placed in a steel case which can stand the pressures of the deep. In the Atlantic Ocean the cable is sometimes at depths where the pressure is three tons per square inch.

The cable itself is light along the unarmoured sections, weighing only five tons a mile and less than two inches in diameter. The armoured sections from the shore to a depth of 300 fathoms is of a cross section shown in Fig. 13. Some shorelines and continental shelves drop steeply. Here the currents are strong, chafing the cable on the rocks.

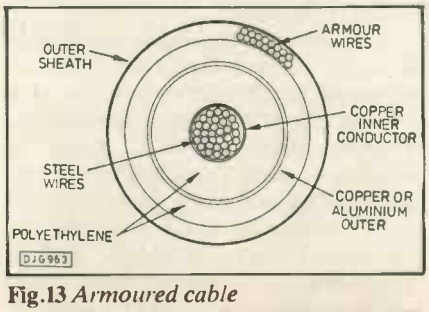

Fig.13 *Armoured cable*

The cable is manufactured by covering the steel wires in the centre with copper which will be the inner conductor. At high frequencies electrical signals travel only in the 'skin' of a conductor and because of this 'skin' effect a tube is sufficient.

The copper tube is then insulated with polyethylene which is shaved with cutters to give an accurate diameter. The outer conductor can then be aluminium or copper. This is followed by a sheath of polyethylene, a sheath of steel wires for external armour and a final cover of polyethylene.

The cost of polyethylene varies with the cost of oil and world copper prices are also variable. However, the price of aluminium is more stable and is about 6% cheaper than copper though the attenuation is about 5% higher than copper.

If aluminium is used as the outer conductor, then zinc is used as sacrificial anodes at the repeaters, to protect against corrosion of cable that might get exposed.

CANTAT 2 is a 14MHz system costing £30 million. The cost for each circuit in

TAT 1 was £294,000; for CANTAT 1 it was £100,000 and for CANTAT 2 it works out at £16,500. Technology has brought down the cost per circuit.

Before TAT 1 there were only telegraph cables across the Atlantic and telephone circuits were carried by radio with much fading and interference. In 1962 there were half a million telephone calls between Britain and the USA. This figure rose to 4.5 million in 1973 and 25 million in 1980. Today it is around 30 million.

14 MHZ SYSTEM

Many of the points relating to CANTAT 2 apply here. However, there are additional matters. The utilisation of the cable bandwidth of 14MHz is shown in Fig. 14.

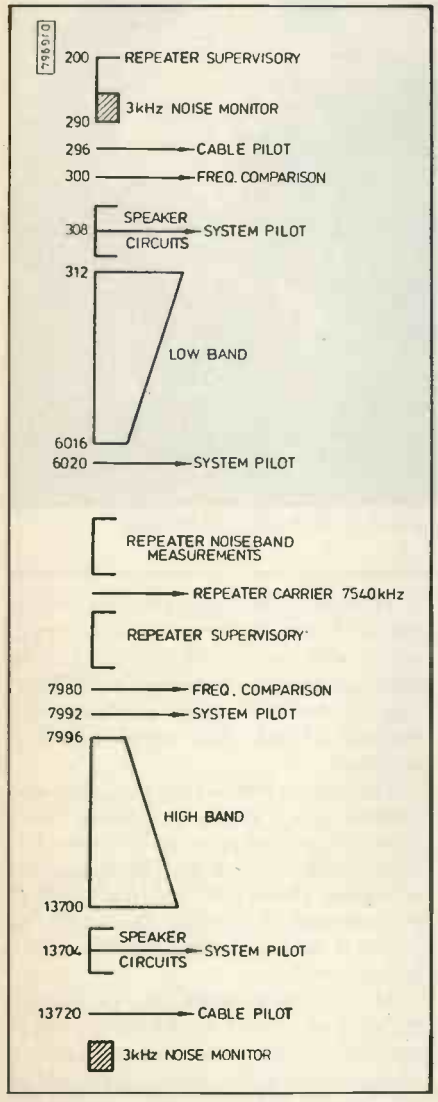

Fig.14 *14MHz Bandwith utilisation*

As mentioned before, the send and receive signals are on the same cable therefore the bandwidth is divided into a low frequency band and a high frequency band. If one terminal is designated A and the other B, the transmission from A to B, by convention, is over the low frequency band. It follows that transmission over the high frequency band will be in the B to A direction.

If a single amplifier were used in the repeater to amplify the whole band, overload instability could occur where power is transferred between bands and the amplifier starts 'singing'. Since separate amplifiers are used for each direction of transmission, then the requirements on transistor manufacture and amplifier design can be eased. A low frequency, wideband amplifier can be used in the A to B direction and a high frequency amplifier in the B to A direction.

An amplifier never has a characteristic that perfectly matches cable loss, therefore equalisers have to be inserted with every fifteenth repeater to 'mop' up any residual response. An equaliser is a circuit built out of basic passive components: capacitors, resistors and inductors. The effect of using an amplifier and equaliser on cable attenuation is shown in Fig. 15. CANTAT 2 has 31 equalisers at intervals of 90 miles.

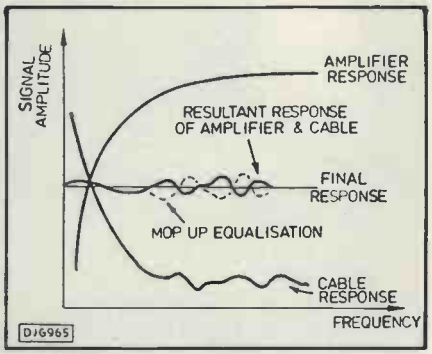

Fig.15 *Equalised cable response*

Each manufacturer offers a different equaliser arrangement. The British manufacturer builds the equaliser on the ship. This equaliser is then sealed into the repeater case before heaving it overboard.

The American manufacturer has equaliser sections in which presets are selected by control leads which are then cut and sealed before laying the repeater. The Japanese manufacturer has an equaliser which is magnetically controlled and also set on board ship. The French manufacturer uses equalisers which can be set from land. This is a good idea but the variation in cable response due to ageing needs to be predicted, so that the required limits of adjustment can be provided before laying the repeater.

The response of a cable needs to be matched, not only during laying but over its useful life. The cable response may change due to changes in temperature, pressure and of course, ageing. In shallow water particularly, the temperature may vary a lot, causing a gain variation as much as 32dB, and thermistors are provided in the amplifiers to change the gain automatically.

A component improvement in repeaters is the use of metal film resistors instead of wire wound resistors. At the high frequencies used wire wound resistors would exhibit an inductive effect. Sometimes components are subjected to accelerated ageing by applying higher than normal operating voltages or keeping them in an oven for a selected time. The accelerated ageing ensures that the component operates on the flat part of the bath tub characteristic Fig. 12, ie least likely to fail.

The 23 supergroups are transmitted from terminal A to terminal B in the low band and from terminal B to terminal A in the high band. The low band is from 312kHz to 6016kHz and the high band from 7996kHz to 13,794kHz. The spacing between supergroups is 8kHz or 12kHz depending on manufacturer, and each supergroup occupies the band 312kHz to 552kHz. Every supergroup is translated into its rightful place in the wideband.

PILOTS AND CARRIERS

There are two cable pilots, one in each direction that keep a check on the submerged equipment only. The other two pilots in each direction, the system pilots, keep a check on the traffic levels. Since these pilots are only 4kHz from the edges of the bands, it is possible to detect for instance if the wideband response suddenly develops a slope.

Stations which multiplex channels into supergroups are called carrier stations and usually contain a master oscillator which generates a 60kHz tone. This 60kHz is accurate to within 5 parts in 10^8. Sometimes it may be necessary to transmit this tone down a submarine cable to the distant terminal for comparison. This is achieved by multiplying the 60kHz up to 300kHz so that it fits in the low band or up to 7980 kHz so that it fits in the high band.

All these pilots are outside the speech band and therefore need not pass through any modulators or demodulators. Using multipliers and dividers, a whole range of frequencies like 12kHz and 124kHz are obtained from 60kHz. These frequencies are then used to derive carriers which are in turn used to modulate and demodulate the bands. If the master oscillator did not have the specified accuracy of 5 parts in 10^8 then the carriers would be even less accurate than they are. This would lead to the speech bands drifting up and down and overlapping with each other.

The system pilots pass through mercury-wetted reed relays. In the event of traffic failure and therefore pilot failure, the relays switch to a standby path within 10ms.

NOISE

There is a 3kHz channel at each end of

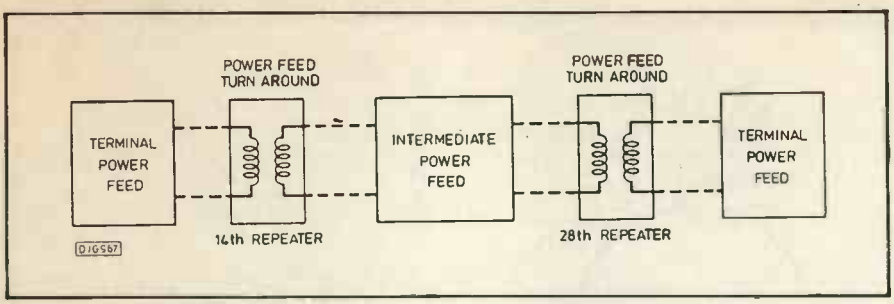

Fig.16 *. Power feed turn-around*

the cable bandwidth for measuring the noise performance in each direction, and this can be measured at all times. The specified noise level is not more than 1 picowatt in a 3kHz channel per kilometre of cable.

The cable has an attenuation of 6.5dB at 13.7 MHz and if the repeater amplifiers have a gain of 43dB at 13.7MHz, then the required signal to noise ratio is obtained.

POWER

A typical land based 12MHz system would have separate coaxial cables for each direction and power feeding would be at 49mA and +250V down one centre conductor and −250V down the other centre conductor. In effect this is a 500V supply but the hazard to maintenance engineers is reduced by making the supply 250–0–250V and limiting the current to 49mA.

At every fourteenth repeater the power is turned back on itself. This means that intermediate power feed stations must be found, Fig. 16.

In the middle of the ocean there is no intermediate power feed therefore the terminal voltage needs to be increased to 12kV and 500mA current. Over 500 repeaters this works out to about 20V per repeater. The voltage is fed down the centre conductor and since only one cable is used, the return path is via the sea.

In order to reduce the terminal voltage there is no reason why each terminal cannot feed half the system voltage in a series aiding mode, Fig. 17. One of the big advantages of reducing the system voltage is that the voltage rating of the power separating filter (psf) capacitor can be reduced.

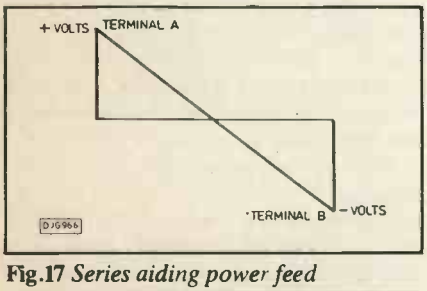

Fig.17 *Series aiding power feed*

No one wants 12kV down their earhole and since the power is fed down the same conductor that carries the signal, the power needs to be prevented from taking the signal path through the repeater. The psf capacitor is normally rated 12kV and is one of the components tested extensively for reliability.

To keep the repeater gain constant the line current needs to be regulated within 0.25%.

REPEATERS

A block diagram of a repeater is shown in Fig. 18. One useful feature of a terminal is its supervisory system and its ability to locate a break in the cable down to a section between two repeaters. This can be achieved if a repeater returns a distinct identification tone.

Using crystal filters, a bandwidth of 150Hz is sufficient for each tone. For 600 repeaters a total bandwidth of 150 x 600 = 90kHz is required. Therefore in the A to B direction the frequency range 200kHz to 290kHz is allocated and in the B to A direction 7740kHz to 7830kHz.

Associated with each repeater is a crystal oscillator and modulator for loop gain tests, ie if a single tone is sent in the low frequency direction, it must be translated to the high frequency band and returned by the repeater being interrogated.

The crystal oscillator is stable within ±10 parts per million at 7540kHz for a temperature range of 0°C to + 25°C. The components of a cable are designed for a life of 25 years and over this period, the oscillator is required not to drift more than ±12 parts per million.

One of the problems of connecting a cable to a repeater is that the strength member is in the centre of the cable and somehow this needs to be anchored to the repeater casing. One way of achieving this to overlay the point where the cable enters the casing, with steel wires in order to transfer the load from the cable core to the repeater casing.

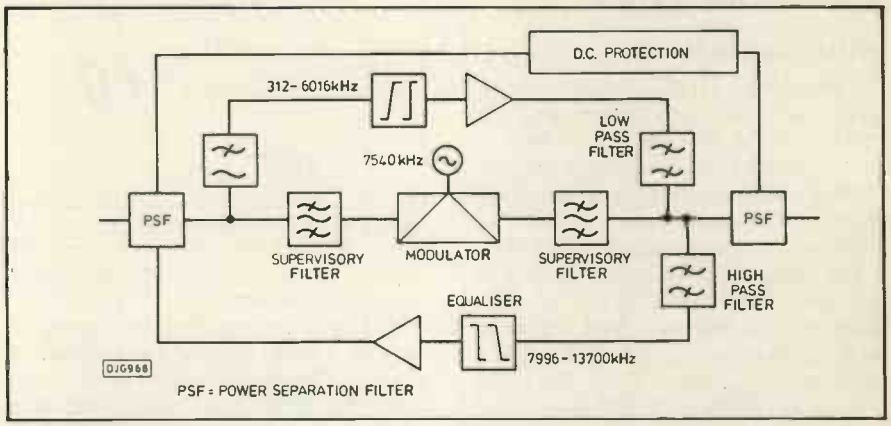

Fig.18 *Repeater*

TERMINAL EQUIPMENT

Fig. 19 is a block diagram of terminal equipment. It is an interface between the inland network and the 'wetbits'. It provides pilots, and power to the repeaters and supervisory facilities.

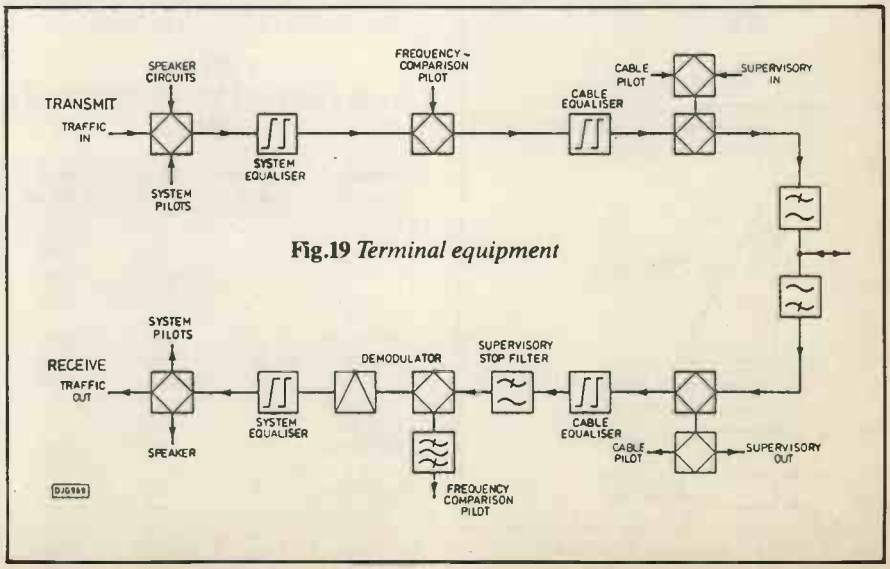

Fig.19 *Terminal equipment*

Included in the supervisory tests are loop gain, harmonic distortion and noise measurements.

Another facility available at the terminal is speaker circuits (engineer order wire, eow, if you are American). Four circuits each 2kHz are slotted between 304kHz and 312kHz. Alternately, if the cable pilots can be sacrificed and all the repeater supervisories are not required, three 4kHz telephone circuits can be fitted in between 288kHz and 300kHz.

45MHZ SYSTEM

Although the 14MHz system has been called the long haul system and the 45MHz the short haul, technology is always pushing the boundaries and the 45MHz is also available as a long haul version. Of course the division is arbitrary - how long is a piece of string?

The 45MHz, 69 supergroup system can carry 4140 4kHz circuits or 5520 3kHz circuits. The short haul version is used for distances up to 1000 nautical miles and requires 6.25kV. For long routes up to 3500 nautical miles a voltage of 12kV is required for repeaters every 3.5 nautical miles on a 1.7 inch cable.

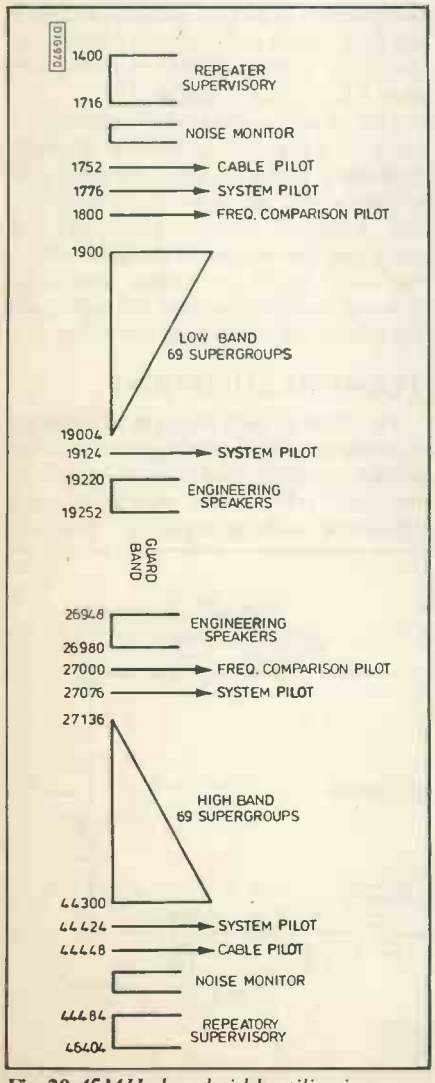

Fig.20 *45MHz bandwidth utilisation*

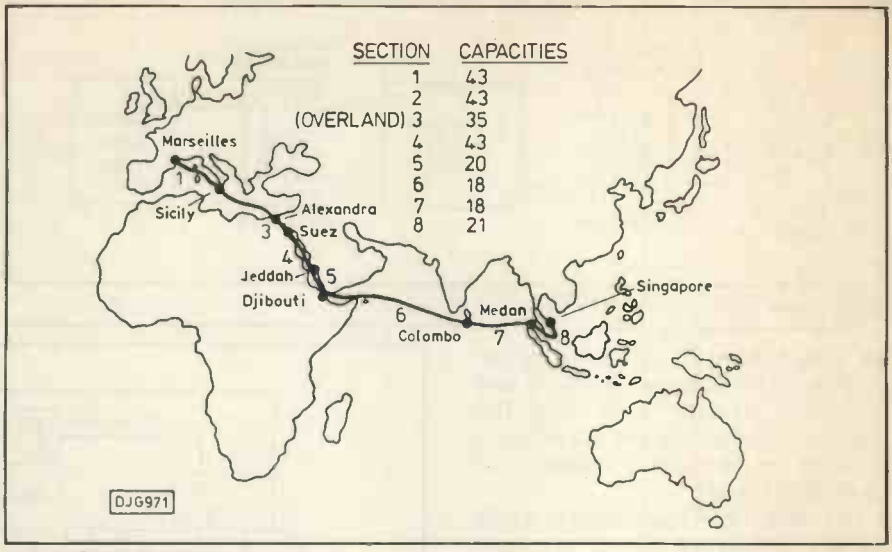

Fig.21 *SEA-ME-WE sections*

Equalisers are inserted at every twentieth repeater.

The bandwidth utilisation is similar to that for 14MHz systems and is shown in Fig. 20. Terminal equipment is cheap compared to the total cost of the cable therefore terminal equipment is duplicated in case of failure.

REPEATERS

At 500 mA current, the voltage across each repeater is about 15 volts. As before there are thermistors in shallow water sections. Quality components like mica capacitors and thin film resistors are used together with a transistor whose f_t is 4000MHz.

The low band is 1.9MHz to 19MHz and the high band is 27.2MHz to 44.3MHz. Most of the other arrangements are similar to that for 14MHz systems.

MODERN CABLES

Among the cables completed recently or nearing completion are ANZCAN, SEA–ME–WE, TAT 7, TAT 8, and Belgium 5. The last two will be optical fibre systems. Some manufacturers and what they provide in terms of analogue cable capacity is shown in Table 3.

TABLE 3: MANUFACTURERS OF ANALOGUE CABLES

Manufacturer	Bandwidth (MHz)	No. of 4kHz ccts	No.of 3kHz ccts
STC (Britain)	5	480	640
	9	900	1200
	14	1380	1840
	45	4140	5520
Submarcom (France)	5	480	640
	12	1260	1680
	25	2580	3440
AT&T (America)	6	633	845
	29.5	3150	4200
Fujtsu/NEC (Japan)	5	480	640
	10	900	1200
	12	1200	1600
	36	2700	3600

ANZCAN replaces the old COMPAC cable and has about 20 times the capacity of COMPAC. ANZCAN connects Australia, New Zealand, Fiji, Hawaii and Canada. It cost £250 million.

There are 1123 repeaters in the total distance of 8160 nautical miles and the line voltage is 406V. The sections and capacities are as follows:

Australia - Norfolk Island	14MHz
Norfolk Island - Fuju	14MHz
Fiji - Hawaii	14MHz
Hawaii - Canada	14MHz
Norfolk Island - New Zealand	5MHz

SEA–ME–WE stands for South–East Asia, Middle East, Western Europe and is 7330 nautical miles long. It was completed in 1986 and cost $ 400 million. The capacity of each section in supergroups is shown in Fig. 21.

TAT 7 was completed in 1983 and cost £100 million. It is a 45MHz cable and carries 4200 circuits. TAT 7 runs from Lands End in the UK to Tuckerton, New Jersey in the USA and will probably be the last analogue cable.

The cable is about 3800 miles long and 1.7 inches in diameter. Power feeding is 5275V from each end and 657mA. The repeaters are spaced at 5.1 nautical miles, and there are 12 equalisers which can be adjusted from Land's End.

In addition to handling telex, data and telephony, videoconferencing is also carried. This is a facility whereby a number of people in one country can talk simultaneously to business associates in another country, over a television link.

Instead of using the full 6MHz bandwidth required for broadcast television, which would require 68Mbit/s when converted to digital form, only 2Mbit/s are transmitted. This is achieved by making extensive use of bandwidth compression techniques and refreshing the picture store only occasionally since there is little movement in a conference studio.

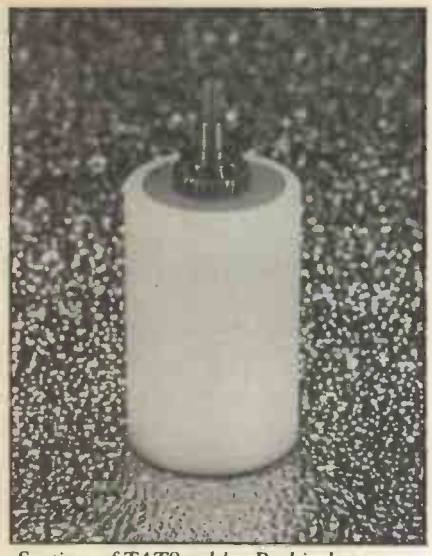

Section of TAT8 cable. By kind permission of British Telecom

TAT 8 will be optical fibre operating monomode at 1300nm. It will be the first submarine cable to use a branching unit located on the ocean floor. This will enable the US traffic to be split between the UK and France.

A schematic of the branching unit is shown in Fig.22. Three fibre pairs will start off from Tuckerton, USA, and the branching unit, located off the European continental shelf will send two pairs to Widemouth in the UK and two pairs to Penmarch in France.

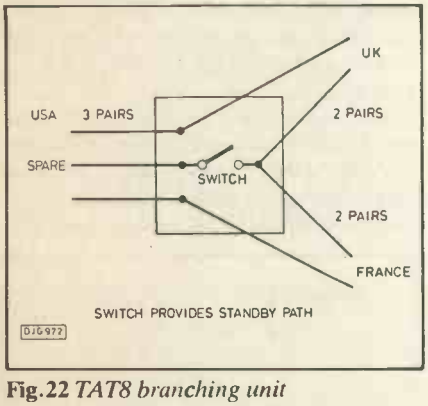

Fig.22 *TAT8 branching unit*

The total length of the cable will be 6657km and cost $335 million when completed in 1988. The repeater spacing will be about 45km and the fibres will operate at bit rate of 280 Mbit/s.

The basic capacity is 8000 circuits but sophisticated cme will give a 5:1 advantage bringing the total capacity up to 40,000 circuits. CME on its own gives an advantage of 2:1 or 2.5:1. In addition adaptive differential pulse code modulation (adpcm) will be used to give a further advantage of around 2.5:1 which brings the total advantage to 5:1.

Pulse code modulation uses eight bits to describe each speech sample. If four bits are used then an advantage of 2:1 is gained without loss of speech quality. Further reductions are possible but the speech quality may suffer.

Three manufacturers will be involved. AT&T of America will supply a 3625 mile cable from Tuckerton to the branching point. Submarcom of France will supply the 195 mile portion from the branching point to Pennarch, France and the 325 mile portion from the branching unit to Widemouth Bay, Cornwall will be manufactured by Standard Telephone and Cables.

Belgium 5 will cost about £7 million and was completed in 1987. It runs from Broadstairs in the south–east of England to Ostende in Belgium and has three repeaters spaced by about 35km. The 122km long cable was buried by the cable ship Alert to prevent damage in the busy English Channel.

There are three pairs of optical fibres operating at 280Mbit/s each. In addition to being optical fibres, TAT 8 and Belgium 5 will carry digital signals as opposed to analogue signals carried by coaxial cables in the past. Fig. 23 shows an analogue and a digital signal.

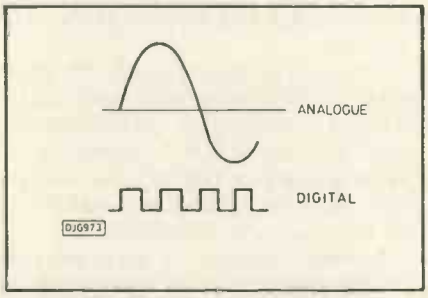

Fig.23 *Analogue and digital signals*

This does not imply that coaxial cable cannot carry digital signals. Many overland coaxial cables have been in operation carrying digital signals at various bit rates. In fact all that is required is for the repeater to be replaced by a regenerator. A repeater merely amplifies an analogue signal and passes it on. A regenerator actually replaces a ragged pulse with a new one - in fact for every pulse applied to the input, a new pulse is generated at the output.

The optical fibres of Belgium 5 will operate at a wavelength of 1300nm in monomode and 300 volts will be used to supply the diodes in the regenerators. A brief description of optical operation follows:

OPTICAL COMMUNICATIONS

The main difference between electrical communication and optical communication is that optical communication operates higher up the frequency spectrum Fig. 24.

Light emitting diodes (leds) and lasers (light amplification by simulated emission of radiation) are used as light sources. These are switched on and off rapidly to make them operate in the digital mode, ie light on = digital signal 1, light OFF = digital signal 0.

If we take the top frequency of a 45MHz cable system as 45MHz, this

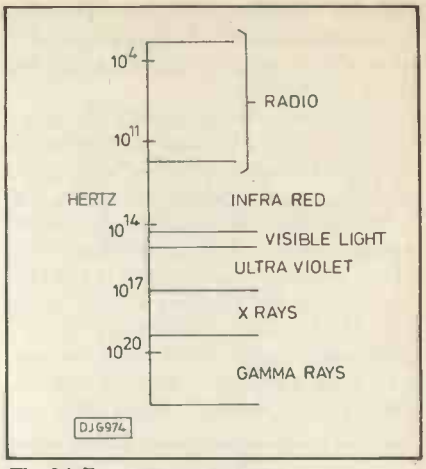

Fig.24 *Frequency spectrum*

produces a wavelength of 6.66 metres approximately. Compared to this, optical communication over optical fibres operates at 850 nanometres and 1300 nanometres (nm).

Note that we compare wavelengths rather than frequencies. Since digital systems operate in an on–off mode, there is no direct relationship to frequency as there would be in an electric transmission system using frequency division multiplex (fdm).

It is a well know fact that digital systems are hungry for bandwidth compared to analogue systems. For instance if a 4kHz speech band is amplitude modulated by a carrier it will still occupy 4kHz of bandwidth at the carrier frequency. However if the same 4kHz is converted to digital form using 7–bit pcm (pulse code modulation) it would occupy as much as 28kHz of bandwidth.

This is the inherent waste in digital systems. In return one gets excellent noise immunity. Various design rules are applied depending on what one is transmitting. For instance, a television picture of 6MHz nominal bandwidth when coverted to digital form could operate at 70Mbit/s and require at least 70MHz of bandwidth on the medium used to transmit it.

So although there is no direct relationship between a digital system and bandwidth, there is an indirect one. That is, the minimum frequency required to transmit at least the fundamental frequency is the same figure as the bits per second, 70MHz in this case. This is illustrated in Fig. 25.

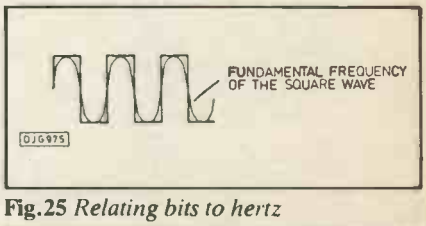

Fig.25 *Relating bits to hertz*

A block diagram of an optical fibre transmission system is shown in Fig. 26. The detector in a regenerator is an avalanche photodiode (apd) or positive

intrinsic negative (pin) diode. Here lies the noise immunity of a digital system. A new pulse is regenerated for every one received, Fig. 27.

Most noise is of an amplitude nature, therefore any electrical spikes on an amplitude modulated wave will remain after the signal is demodulated, Fig. 28.

The trouble with launching light down a glass fibre is that it is soon reflected out of the fibre and propagation is lost. The answer is to put cladding around it, Fig. 29a. The cladding is also glass but of a different refractive index. An alternative is to dope the glass so that the refrative index varies gradually instead of a step variation. The propagation mode is shown in Fig. 29b for graded index fibre.

If a pure wavelength can be obtained of as narrow a linewidth as possible then monomode operation can be achieved. Fig. 29c. This means that the light propagates straight down the core and a wider bandwidth is available. If a pure frequency is not available then other frequencies will be present and in modulating these carriers, care must be taken to ensure that sidebands do not overlap. This is the case with multimode propagation and the usable bandwidth is limited.

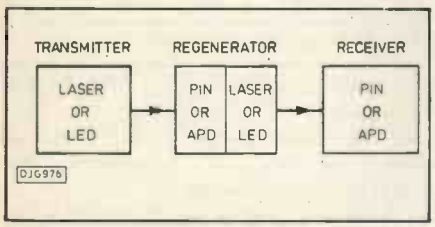

Fig.26 *Optical fibre transmission*

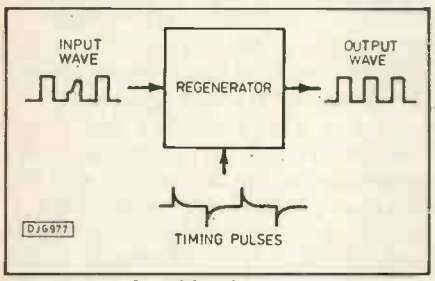

Fig.27 *New for old pulses*

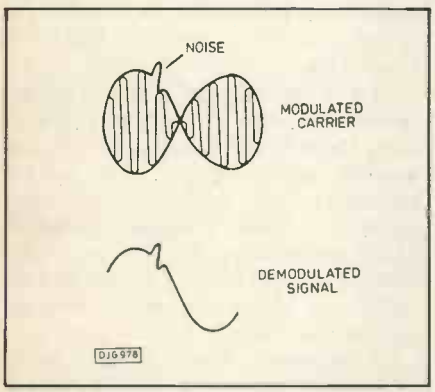

Fig.28 *Noise on modulated am wave*

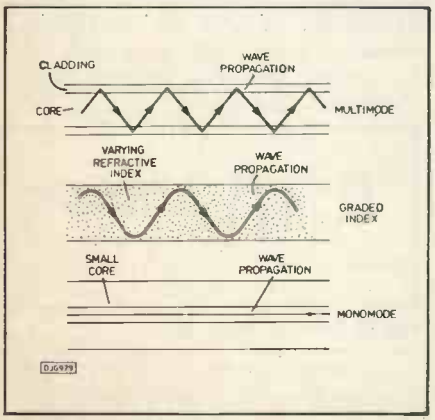

Fig.29 *Fibre types*

CHARGING POLICY

How do countries share the cost of a cable? What if a country did not wish to pay for it initially but wanted to use it later? It could get very complicated.

There are three solutions to this problem: ownership, indefeasible right of use (iru), and lease.

Ownership is a share in the total cost of a system which would include spare capacity.

IRUs are purchased for the life of the cable and the cost includes capital cost as well as a proportion of maintenance cost. The owner is still responsible for actually carrying out the maintenance. IRUs state the capacity in bandwidth or bit rate that has been purchased.

Leasing capacity is equivalent to renting supergroups or hypergroups or bit rates for a fixed period of time.

POWER CABLES

Power cables are much heavier than telephone cables and any ship laying or repairing power cables needs bow and stern skids. Power cables can be single core or three core and a diagram of a three core cable is shown in Fig. 30.

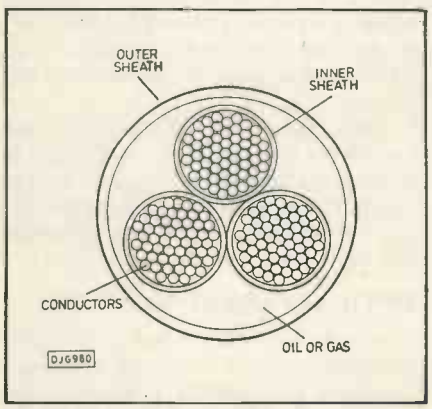

Fig.30 *3 core power cable*

Typical voltages and filling for power cables are:

33kV	solid type
138kV	gas pressured
420kV	oil filled

Spans of up to 16km are possible. There is a 50kV cable from Sweden to Denmark, then in 1951 a 132kV cable was installed between the two countries.

Submersible trenching plough. By kind permission of British Telecom

Nearer home, the Isle of Wight was supplied by a 33kV cable in 1942 followed by two more in 1947 and 1949. In 1964 and 1966 two 132kV cables were installed. These were three core and oil filled.

The Solent flows between the mainland and the Isle of Wight. There are sudden storms even in the summer and a strong tide of around four knots. This means that the cable is moved a lot and is therefore wrapped in heavy armour where it is routed over rocks.

The conductors are 0.3 square inches in cross-section and supply 550A of current. The distance across the Solent is about 4km.

LAYING AND MAINTENANCE

Before a cable can be laid, a survey is made of the seabed including wide scan sonar of shallow water sections. If cables already use the proposed route, then the history and reliability of these cables is taken into account.

Burying cable is expensive and so is the repair of buried cable. Although burying cable will protect it from trawlers, 0.6m of burial will not protect if from a heavy anchor dragged in a storm.

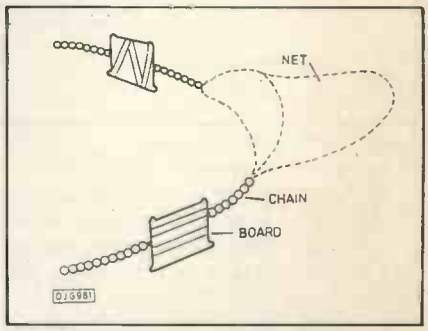

Fig.31 *Trawling*

Trawling for fish involves dragging heavy boards on the seabed, Fig. 31. These can weigh as much as four tons each and penetrate the seabed up to a depth of 0.4m. A far greater risk of damage is from trawlers rather than ship's anchors. In any case, burial to depths greater than 1m works out very expensive particularly if the cable has to be recovered for repair.

To be concluded next month. PE

POWER CONDITIONER

FEATURED IN ETI JANUARY 1988

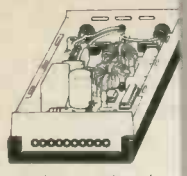

The ultimate mains purifier. Intended mainly for lowering the noise floor and improving the analytical qualities of top-flight audio equipment.

The massive filter section contains thirteen capacitors and two current balanced inductors, together with a bank of six VDRs, to remove every last trace of impulsive and RF interference. A ten LED logarithmic display gives a second by second indication of the amount of interference removed

Our approved parts set consists of case, PCB, all components (including high permeability toroidal cores, ICs, transistors, class X and Y suppression capacitors, VDRs, etc.) and full instructions.

PARTS SET **£28.50** + VAT

Some parts are available separately. Please send SAE for lists, or SAE + £1 for lists, circuit, construction details and further information (free with parts set)

KNIGHT RAIDER

FEATURED IN ETI JULY 1987

The ultimate in lighting effects for your Lamborghini, Maserati, BMW (or any other car, for that matter). Picture this: eight powerful lights in line along the front and eight along the rear. You flick a switch on the dashboard control box and a point of light moves lazily from left to right leaving a comet's tail behind it. Flip the switch again and the point of light becomes a bar, bouncing backwards and forwards along the row. Press again and try one of the other six patterns. An LED display on the control box let's you see what the main lights are doing.

The Knight Raider can be fitted to any car (it makes an excellent fog light!) or with low powered bulbs it can turn any child's pedal car or bicycle into a spectacular TV-age toy!

The parts set consists of box, PCB and components for control. PCB and components for sequence board, and full instructions.

Lamps not included

PARTS SET **£19.90** + VAT

RAINY DAY PROJECTS

All can be built in an afternoon!

JUMPIN' JACK FLASH (ETI March 1988) Spectacular rock, stage and disco lighting effect!	£6.90 + VAT
CREDIT CARD CASINO (ETI March 1987) The wicked pocket gambling machine	£5.90 + VAT
MAINS CONTROLLER (ETI January 1987) Isolated logic to mains interface	£6.20 + VAT
MATCHBOX AMPLIFIERS (ETI April 1986) Listen. 50W of Hi-Fi power from an amp small enough to fit in a matchbox!	
Matchbox Amplifier (20W)	£6.50 + VAT
Matchbox Bridge Amplifier	£8.90 + VAT
L165V Power Amplifier IC, with data and circuits	£3.90 + VAT
TACHO/DWELL METER (ETI January 1987) Turn your Metro into a Porsche!	£16.40 + VAT
HI-FI POWER METER (ETI May 1987) Measures Hi-Fi output power up to 100W – includes PCB, components, meters	
Mono power meter	£3.90 + VAT
Stereo power meter	£7.20 + VAT

FEATURED IN ETI AUGUST 1988

There's nothing quite so encouraging as having a quantifiable result to show for your training efforts. If you are not particularly fit, your resting heart rate will be around 80 beats per minute. As your jogging, aerobics or sport strengthens your heart, the rate will drop dramatically – possibly to 60bpm or less. With the S101, you can watch your progress day by day.

Breathing is important too. How efficiently do you take up oxygen? How quickly do you recover from 'oxygen debt' after strenuous activity? The S101 will let you know.

The approved parts set consists of: case, 3 printed circuit boards, all components (including 17 ICs, quartz crystal, 75 transistors, resistors, diodes and capacitors), LCD, switches, plugs, sockets, electrodes, and full instructions for construction and use.

PARTS SET **£33.80** + VAT

Some parts are available separately. Please send SAE for lists, or SAE + £2 for lists, circuits, construction details and training plan (free with parts set)

THE DREAM MACHINE

FEATURED IN ETI DECEMBER 1987

Adjust the controls to suit your mood and let the gentle, relaxing sound drift over you. At first you might hear soft rain, sea surf, or the wind through distant trees. Almost hypnotic, the sound draws you irresistably into a peaceful, refreshing sleep.

For many, the thought of waking refreshed and alert from perhaps the first truly restful sleep in years is exciting enough in itself. For more adventurous souls there are strange and mysterious dream experiences waiting. Take lucid dreams, for instance. Imagine being in control of your dreams and able to change them at will to act out your wishes and fantasies. With the Dream Machine it's easy!

The approved parts set consists of PCB, all components, controls, loudspeaker, knobs, lamp, fuseholders, fuse, mains power supply, prestige case and full instructions

PARTS SET **£16.50** + VAT

AVAILABLE WITHOUT CASE FOR ONLY **£11.90** + VAT

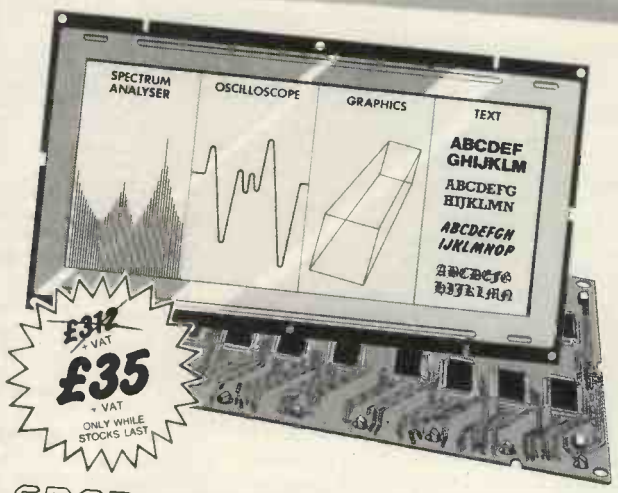

GRAPHICS DISPLAY OFFER

These beautiful dot matrix LCDs were originally ordered from Hitachi by a top flight instrumentation manufacturer. Unfortunately their new product – a portable 'scope – was ditched before they even had a chance to open the cartons!

But it's an ill wind that blows nobody any good. Because of their bad management, you now have the chance to own a high grade graphics display module at a tiny fraction of the normal price. Hitachi distributors will charge £312 each for these displays. From us, while stocks last, the price is £35!

The LM236 display module has a 9½" x 4" display area, made up of 640 x 200 pixels. Since each pixel can be accessed individually, the display is equally at home as a 'scope screen, a spectrum analyser display, a graphics monitor or a text screen.

To help organise the display, mounted on the back is a control board with 20 LSI ICs. This keeps track of all the individual dots and allows the screen to be filled via a simple eight-bit-at-a-time interface.

To use the display, you will need to be fairly self-sufficient in logic design – you must know how to organise a frequency divider and serial data transfer. Apart from these basics, the data supplied with the module will tell all you need to know to get it up and running.

ARMSTRONG 75W AMPLIFIER

FEATURED IN PE JULY 1988

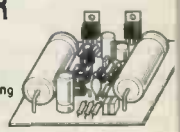

A.J. Armstrong's exciting new audio amplifier module is here at last!

Delivering a cool 75W (conservatively rated – you'll get nearer 100W), this MOSFET design embodies the finest minimalist design techniques, resulting in a clean, uncluttered circuit in which every component makes a precisely defined contribution to the overall sound.

You can read all about it in the July Issue of PE, but why bother with words when your ears will tell you so much more?

Parts set includes top grade PCB and all components.

SPECIAL INTRODUCTORY PRICE FOR FULLY UPGRADED MODULES.

SINGLE PARTS SET **£14.90** + VAT

STEREO PAIR **£25.90** + VAT

Please send SAE + £1 for data and circuits (free with parts set), including diagrams for matching pre-amp and power supply. This amplifier will not be available from your usual audio supplier – we produce the only designer approved parts set

MAINS CONDITIONER

FEATURED IN ETI SEPTEMBER 1986

Cleans up mains pollution easily and effectively. You'll hardly believe the difference in your Hi-Fi, TV, Video, and all other sensitive equipment.

PARTS SET **£4.90** + VAT

RUGGED PLASTIC CASE **£1.65** + VAT

BIO-FEEDBACK

FEATURED IN ETI DECEMBER 1986

Bio-feedback comes of age with this highly responsive, self-balancing skin response monitor! The powerful circuit has found application in clinical situations as well as on the bio-feedback scene. It will open your eyes to what GSR techniques are really all about.

The complete parts set includes case, PCB, all components, leads, electrodes, conductive gel, and full instructions.

PARTS SET **£13.95** + VAT

BIO-FEEDBACK BOOK **£3.95** (no VAT)

Please note: the book, by Stern and Ray, is an authorised guide to the potential of bio-feedback techniques. It is not a hobby book, and will only be of interest to intelligent adults.

POWERFUL AIR IONISERS

Ions, the miraculous *vitamins of the air*, have been credited with almost magical powers.

They are said to improve concentration, reduce blood pressure, help you sleep better, and even to raise you IQ! Although some of the claims may be exaggerated, there's no doubt that ionised air is cleaner, purer and more invigorating than dead air. Anyone who has owned an ioniser would never again want to be without one!

The Direct-Ion caused a sensation when it appeared as a project in ETI. Two years later, in October 1988, the Mistral was unveiled. Which will you go for – the compact, powerful, value for money Direct Ion or the sophisticated, no compromise Mistral? The choice is yours!

MISTRAL IONISER PARTS SET **£24.80** + VAT

DIRECT-ION PARTS SET (BLACK CASE) **£11.50** + VAT

DIRECT-ION PARTS SET (WHITE CASE) **£11.80** + VAT

LM2917 EXPERIMENTER SET

Consists of LM2917 IC, special printed circuit board and detailed instructions with data and circuits for eight different projects to build. Can be used to experiment with the circuits in the 'Next Great Little IC' feature (ETI, December 1986).

LM2917 EXPERIMENTER SET **£5.80** + VAT

LEDs

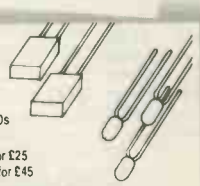

Green rectangular LEDs for bar-graph displays.

50 for £3.50 500 for £25

100 for £6 1000 for £45

DIGITAL AND AUDIO EQUIPMENT LEDs

Assorted 3mm LEDs: red, green, yellow and orange.

25 of each (100 LEDs) for **£6.80**

BRAINWAVE MONITOR

FEATURED IN ETI AUGUST 1987

The most astonishing project ever to have appeared in an electronics magazine. Similar in principle to a medical EEG machine, this project allows you to hear the characteristic rhythms of your own mind! The alpha, beta and theta forms can be selected for study and the three articles give masses of information on their interpretation and powers.

In conjunction with Dr. Lewis's Alpha Plan, the monitor can be used to overcome shyness, to help you feel confident in stressful situations, and to train yourself to excel at things you're no good at.

Our approved parts set contains case, two PCBs, screening can for bio-amplifier, all components (including three PMI precision amplifiers), leads, brass electrodes and full instructions.

PARTS SET **£36.90** + VAT ALPHA PLAN BOOK **£2.50**

SILVER SOLUTION (for plating electrodes) **£3.60** + VAT

Parts set available separately. We also have a range of accessories professional electrodes, books, etc. Please send SAE for lists, or SAE + £2 for lists (construction details and further information (free with parts set)

Prices shown are exclusive of VAT, so please add 15% to the order total. UK postage is 70p on any order. Carriage and insurance for overseas orders £4.50. Please allow up to 14 days for delivery.

Specialist SEMICONDUCTORS LIMITED

SALES DEPT., ROOM 108, FOUNDERS HOUSE, REDBROOK, MONMOUTH, GWENT.

ELMASET INSTRUMENT CASE
300 x 133 x 217mm deep ..... **£10 ea (£2.20)**

REGULATORS
LM317T PLASTIC T0220 variable **£1**
LM317 METAL **£2.20**
7812 METAL 12V 1A **£1**
7805/12/15/24V plastic ..... **45p** 100+**20p** 1000+ **15p**
7905/12/15/24 plastic ..... **45p** 100+**20p** 1000+ **15p**
CA3085 T099 variable reg ..... 2/**£1**
LM338 5A VARIABLE **£5**

COMPUTER ICS
4164-15 ex equipment **£1**
27128A 250nS EPROM NEW **£3.20**
1770 FLOPPY DISC CONTROLLER CHIP **£10**
68008 PROCESSOR EX-EQPT **£5**
27256-30 ex-eqpt **£3.00**
2764-30 ..... **£2**
2732-45 USED ..... **£2** 100+ **£1**
2716-45 USED ..... **£2** 100+ **£1**
1702 EPROM EX EQPT **£5**
2114 EX EQPT 60p 4116 EX EQPT **70p**
6264-15 8k static ram **£6**
6116-3 (D444C) **£1.50**
4416 RAM **£3.50**
ZN427E-8 ..... **£4.00**
ZN428E-8 ..... **£4.00**

CRYSTAL OSCILLATOR
1.8342 MHz ..... 2/**£1**

CRYSTALS
2.77 MHz/4.9152 MHz/49.045 ..... **£1 each**

TRANSISTORS
BC107, BCY70 PREFORMED LEADS
full spec ..... 20/**£1** **£4**/100 **£30**/1000

SIL RESISTOR NETWORKS
8 PIN 10k 22k ..... 5/**£1**
9 PIN 22k ..... 5/**£1**
10 PIN 68R 180R 22k ..... 5/**£1**

POWER TRANSISTORS
OC35 (Marked CV7084) **£1**
POWER FET IRF9531 8A 60V ..... 2/**£1**
2N3055H RCA HOUSE NUMBERED ..... 5/**£2**
2SC1520 sim BF259 ..... **3/£1** 100/**£22**
TIP141/2 £1 ea TIP110/125/42B ..... 2/**£1**
TIP35B TIP35C **£1.50**
SE9301 100V 10A DARL. SIM TIP121 ..... 2/**£1**
2N3055 EX EQPT TESTED ..... 4/**£1**
PLASTIC 3055 OR 2955 equiv 50p ..... 100/**£35**
2N3773 NPN 25A 160V £1.80 ..... 10/**£16**
BD132 ..... **5/£1**

QUARTZ HALOGEN LAMPS
A1/216 24V 150 WATTS **£2.25**
H1 12V 50W (CAR SPOT) **£1.50**

NICKEL CADMIUM BATTERIES
17.2 volts 1.8 A/hr.C CELLS IN PACKS OF 6 . **£5** **p&p £1**
ZIF SOCKETS ..... **2/£1.50**
TEXTOOL single in line 32 way. Can be ganged for use with any dual in line devices.

MISCELLANEOUS
4700uF 16v AXIAL DUBILIER 20K AVAILABLE **£15/100 £120/1000**
BNC 50 OHM SCREENED CHASSIS SOCKET ..... **3/£1**
BNC TO CROC CLIPS LEAD 1 metre **£1**
MOULDED INDUCTOR 470μH
size of a 1 watt film resistor ..... **5/£1**
TO-220 HEAT SINK sim RS 403-162 ..... 10/**£2.50**
SMALL MICROWAVE DIODES AEI DC1028A ..... 2/**£1**
D.I.L. SWITCHES 10 WAY **£1** 8 WAY **80p** 4/5/6 WAY .. **50p**
180 volt 1 watt ZENERS ALSO 12v ..... 20/**£1**
OLIVETTI LOGOS CALCULATOR KEYBOARD (27 KEY) PLUS 12 DIGIT FLUORESCENT DISPLAY ON DRIVER BOARD (i.e. CALCULATOR LESS CASE, TRANSFORMER AND PRINTER) **£1.30**
PLASTIC EQUIPMENT CASE 9 x 6 x 1.25 in. WITH FRONT AND REAR PANELS CONTAINING PCB WITH EPROM 2764-30 AND ICS 7417 LS30 LS32 LS74 LS367 LM311 7805 REG, 9 WAY D PLUG, PUSH BUTTON SWITCH, DIN SOCKET . **£1.90**
VN10LM 60v ½A 5ohm TO-92 mosfet ..... **4/£1** 100/**£20**
MIN GLASS NEONS ..... 10/**£1**
RELAY 5v 2 pole changeover looks like RS 355-741 marked STC 47WB05T ..... 2/**£1**
OMRON RELAY 3.6 volt coil 2p c/o contacts marked G4D-287P-BT2. ..... 2/**£1**
MINIATURE CO-AX FREE PLUG RS 456-071 ..... 2/**£1**
MINIATURE CO-AX FREE SKT. RS 456-273 ..... **2/£1.50**
DIL REED RELAY 2 POLE n/o CONTACTS **£1**
RS 348-649 ..... **£1.50** 100+**£1**
PCB WITH 2N2646 UNIJUNCTION with 12v 4 POLE RELAY **£1**
400m 0.5w thick film resistors (yes four hundred megohms) **4/£1**
MINIATURE CO-AX FREE PLUG RS 456-071 ..... 2/**£1**
MINIATURE CO-AX FREE SKT.RS 456-273 ..... **2/£1.50**
STRAIN GAUGES 40 ohm Foil type polyester backed balco grid alloy ..... **£1.50 ea** 10+ **£1**
ELECTRET MICROPHONE INSERT **£0.90**
Linear Hall effect IC Micro Switch no 613 SS4 sim RS 304-267 ..... **£2.50** 100+ **£1.50**
HALL EFFECT IC UGS3040 + MAGNET **£1**
OSCILLOSCOPE PROBE SWITCHED X1 X10 ..... **£10**
CHEAP PHONO PLUGS ..... 100/**£2** 1000/**£18**
1 pole 12 way rotary switch ..... **4/£1**
AUDIO ICS LM380 LM386 ..... **£1 ea**
555 TIMER 5/**£1** 741 OP AMP ..... 5/**£1**
ZN414 AM RADIO CHIP **80p**
COAX PLUGS nice ones ..... **4/£1**
COAX BACK TO BACK JOINERS ..... **4/£1**
4 x 4 MEMBRANE KEYBOARD **£1.50**
15.000uF 40V ..... **£2.50 (£1.25)**
INDUCTOR 20uH 1.5A ..... 5/**£1**
NEW BT PLUG + LEAD **£1.50**
1.25" PANEL FUSEHOLDERS ..... 5/**£1**
CHROMED STEEL HINGES 14.5 x 1" OPEN ..... **£1 ea**
TOK KEY SWITCH 2 POLE 3 KEYS ideal for car/home alarms **£3**
12v 1.2w small wire ended lamps fit AUDI VW TR7 SAAB VOLVO ..... 10/**£1**
12V MES LAMPS ..... 10/**£1**
STEREO CASSETTE HEAD **£2**
MONO CASS.HEAD **£1** ERASE HEAD **50p**
THERMAL CUT OUTS 50 77 85 120°C ..... **£1 ea**
THERMAL FUSE 121°C 240V 15A ..... 5/**£1**
TRANSISTOR MOUNTING PADS TO-5/TO-18 ..... **£3**/1000
TO-3 TRANSISTOR COVERS ..... 10/**£1**
STICK ON CABINET FEET ..... 30/**£1**
PCB PINS FIT 0.1" VERO ..... 200/**£1**
TO-220 micas + bushes ..... 10/**50p** 100/**£2**
TO-3 mica + bushes ..... 20/**£1**
kynar wire wrapping wire ..... 2oz/**£1**
PTFE mln screened cable ..... 10m/**£1**
Large heat shrink sleeving pack **£2**
CERAMIC FILTERS 6M/9M/10.7M ..... **50p** 100/**£20**
TOKIN MAINS RFI FILTER 250v 15A **£3**
IEC chassis plug rfi filter 10A **£3**
Potentiomenters short spindles values 2k5 10k 25k 1m **2M5** lin ..... 5/**£1**
500k lin 500k log ..... 4/**£1**
40Khz ULTRASONIC TRANSDUCERS EX-EQPT NO DATA **£1**/pr
PLESSEY INVERTER TRANSFORMER ..... **50 CYCLES**
11.5-0-11.5V to 240v 200VA ..... **£6 (£3)**

ZENERS
5.6V 1W3 SEMIKRON 50K AVAILABLE @£25/1000
SUPRESSOR OF606 120V BI DIRECTIONAL ZENER IN 3 AMP W/E PACKAGE ..... 5/**£1**

DIODES AND RECTIFIERS
BAW76 EQUIV 1N4148 ..... **£60/10,000**
1N4148 ..... 100/**£1.50**
1N4004/SD4 1A 300V ..... 100/**£3**
1N5401 3A 100V ..... 10/**£1**
BA158 1A 400V fast recovery ..... 100/**£3**
BA159 1A 1000V fast recovery ..... 100/**£4**
120V 35A STUD **65p**
BY127 1200V 1.2A ..... 10/**£1**
BY254 800V 3A ..... 8/**£1**
BY255 1300V 3A ..... 6/**£1**
6A 100V SIMILAR MR751 ..... **4/£1**
VM88 800mA 100V DIL B/REC ..... 5/**£1**
1A 800V BRIDGE RECTIFIER ..... **4/£1**
4A 100V BRIDGE ..... 3/**£1**
6A 100V BRIDGE ..... 2/**£1**
8A 200V BRIDGE ..... 2/**£1.35**
10A 200V BRIDGE **£1.50**
25A 200V BRIDGE **£2** ..... 10/**£18**
25A 400V BRIDGE **£2.50** ..... 10/**£22**

SCRS
2P4M EQUIV CI06D ..... 3/**£1** 100/**£20**
MCR72-6 10A 600V SCR **£1**
35A 600V STUD SCR **£2**
TICV106D 800mA 400V SCR ..... 3/**£1** 100/**£15**
MEU21 PROG. UNIJUNCTION ..... 3/**£1**

TRIACS ..... DIACS 4/£1
NEC TRIAC AC08F 8A 600V TO220 ..... 5/**£2** 100/**£30**
TXAL225 8A 400V 5mA GATE ..... 2/**£1** 100/**£35**
TRAL2230D 30A 400V ISOLATED STUD ..... **£4 each**

CONNECTORS
34 way card edge IDC CONNECTOR (disk drive type) **£1.25**
CENTRONICS 36 WAY IDC PLUG **£2.50**
CENTRONICS 36 WAY IDC SKT **£4.00**
BBC TO CENTRONICS PRINTER LEAD 1.5M **£3.50**
CENTRONICS 36 WAY PLUG SOLDER TYPE **£4**
USED CENTRONICS 36W PLUG+SKT **£3**

USED D CONNECTORS price per pair
D9 **£1**, D15 **£1.50**, D25 **£2**, D37 **£2**, D50 **£3.50** covers **50p ea.**

WIRE WOUND RESISTORS
W21 or sim 2.5W 10 of one value **£1**
R10 OR15 OR22 2R0 2R7 4R7 5R0 5R6 8R2 10R 12R 15R 18R 20R 22R 27R 33R 36R 47R 56R 62R 91R 120R 180R 390R 430R 470R 680R 820R 910R 1K15 1K2 1K5 1K8 2K4 2K7 3K3 3K0 5K0 10K
R05 (50 milli-ohm) 1% 3w ..... 4 FOR **£1**
W22 or sim 6W 7 OF ONE VALUE **£1**
R47 R62 1R0 1R5 1R8 3R3 6R8 9R1 12R 20R 24R 27R 33R 51R 56R 62R 68R 100R 120R 180R 220R 270R 390R 560R 620R 910R 1K0 1K2 1K5 1K8 2K2 2K7 3K3 3K9 4K7 8K2 10k 15K 16K 20K
W23 or sim 9W 6 of one value **£1**
R22 R47 1R0 1R1 15R 56R 62R 100R 120R 180R 220R 300R 390R 680R 1KO 1K5 5K1 10K
W24 or sim 12W 4 OF ONE VALUE **£1**
R50 2R0 9R1 10R 18R 22R 27R 56R 68R 75R 82R 100R 150R 180R 200R 220R 270R 400R 620R 1K0 6K8 8K2 10K 15K

PHOTO DEVICES
SLOTTED OPTO-SWITCH OPCOA OPB815 ..... **£1.30**
2N5777 ..... **50p**
TIL81 PHOTO TRANSISTOR **£1**
TIL38 INFRA RED LED ..... 5/**£1**
OP12252 OPTO ISOLATOR **50p**
PHOTO DIODE **50p** ..... 6/**£2**
MEL12 (PHOTO DARLINGTON BASE n/c) **50p**
RPY58A LDR **50p** ORP12 LDR **70p**
LEDs RED 3 or 5mm 12/**£1** ..... 100/**£6**
LEDs GREEN OR YELLOW 10/**£1** ..... 100/**£6.50**
LEDS ASSORTED RD/GN/YW + INFRA/RED ..... 200/**£5**
FLASHING RED OR GREEN LED 5mm **50p** ..... 100/**£35**

SUB MIN PRESETS HORIZONTAL 15/£1 100/£5
1K 4K7 10K 22K 47K 1M 10M

STC NTC BEAD THERMISTORS
G22 22OR, G13 1K, G23 2K, G24 20K, G54 50K, G25 200K, G16 1M, RES @ 20°C DIRECTLY HEATED TYPE ..... **£1 ea**
FS22BW NTC BEAD INSIDE END OF 1" GLASS PROBE RES @ 20°C 200R ..... **£1 ea**

CERMET MULTI TURN PRESETS ¾"
10R 20R 100R 200R 250R 500R 2K 2K2 2K5 5K 10K 22K 47K 50K 100K 200K 500K 2M2 ..... **50p each**

IC SOCKETS
6 pin 15/**£1** 8 pin 12/**£1** 14/16 pin 10/**£1** 18/20 pin 7/**£1**, 22/24/28 pin 4/**£1** 40 pin **30p**

SOLID STATE RELAYS
Zero voltage switching Control voltage 8-28v dc **£2.50**
40A 250V AC SOLID STATE RELAYS **£18**

POLYESTER/POLYCARB CAPS
1n/3n3/5n6/8n2/10n 1% 63v 10mm ..... 100/**£6**
10n/15n/22n/33n/47n/68n 10mm rad ..... 100/**£3.50**
100n 250v radial 10mm ..... 100/**£3**
100n 600v sprague axial 10/**£1** ..... 100/**£6 (£1)**
2u2 160v rad 22mm ..... 100/**£10**
10n/33n/47n 250v ac x rated 15mm ..... 10/**£1**
4700pF Y RATED ..... 10/**£1**
470n 250v ac x rated rad ..... 4/**£1**
1U 600V MIXED DIELECTRIC ..... **50p ea.**

TRIMMER CAPACITORS all types 5/50p
SMALL 5pf 2 pin mounting 5mm centres
grey larger type 2 to 25pF
TRANSISTORS 2N4427 ..... **60p**
FEED THRU CERAMIC CAPS 1000pF ..... 10/**£1**

MINIATURE RELAYS Suitable for RF
5 volt coil 1 pole changeover **£1**
5 volt coil 2 pole changeover **£1**
12 volt coil 1 pole changeover **£1**

MONOLITHIC CERAMIC CAPICITORS
10n 50v 2.5mm ..... 100/**£4.50**
100n 50v 2.5mm or 5mm ..... 100/**£6**
100n ax short leads ..... 100/**£3**
100n ax long leads ..... 100/**£6**
10n 50v dil package 0.3" rad **£4**/100 **£35**/1000
100n 50v dil package 0.3" rad **£10**/100

STEPPER MOTORS 4 PHASE 2 9V WINDINGS ..... £3.50 10/£30

KEYTRONICS
TEL. 0279-505543
FAX. 0279-757656
P O BOX 634
BISHOPS STORTFORD
HERTFORDSHIRE CM23 2RX

MAIL ORDER ONLY
MIN CASH ORDER £3.00 OFFICIAL ORDERS WELCOME
UNIVERSITIES COLLEGES SCHOOLS GOVT DEPARTMENTS
MIN. ACCOUNT ORDER £10.00
P&P AS SHOWN IN BRACKETS (HEAVY ITEMS)
65p OTHERWISE (LIGHT ITEMS)
ADD 15% VAT TO TOTAL
ELECTRONIC COMPONENTS
BOUGHT FOR CASH

Access

SMT AND DIY

BY FRED THORNS

GLUE THAT RECTIFIER DOWN

Surface mounting components – after many predictions to the contrary – are increasingly coming within range of the home constructor. Here a solder manufacturer advises on the repair and construction of smt boards.

As far as the electronics professionals are concerned surface mount technology (smt) is here to stay and it is only a matter of time before enthusiasts develop smt skills of their own. Mixed technology pcbs – those which have both conventional lead components and surface mount devices (smds) are increasingly being incorporated into new equipment as smt takes hold.

This article investigates the practicalities of smt for those of us who are undoubtedly going to come face to face with it in the near future. Particular emphasis in the latter part of this feature is placed on two main areas of smt, removal and replacement, and new assemblies. Before that, however, a brief résumé of how the professionals manufacture smt equipment.

For the purpose of this article we will look at the two basic assembly methods used for discrete smds, whether they are manually or machine assembled. Knowledge of the assembly process will provide essential background.

A leadless surface mount component has to be adhered to the pcb or substrate so that it remains in position until it is soldered. This may be achieved by using a tiny blob of adhesive under the component, to hold it in position until soldering takes place. Alternatively a solder paste is used to stick the component's 'foot' to the pad. The paste is applied using a screening technique, or by syringe. The viscosity of the paste is sufficient to hold the component in position for soldering.

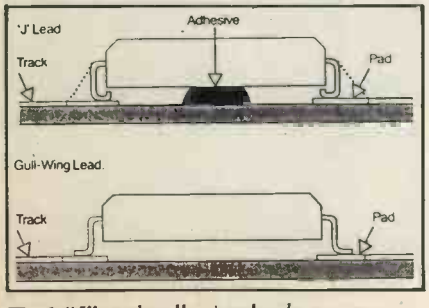

Fig.1 *"J" and gull-wing leads*

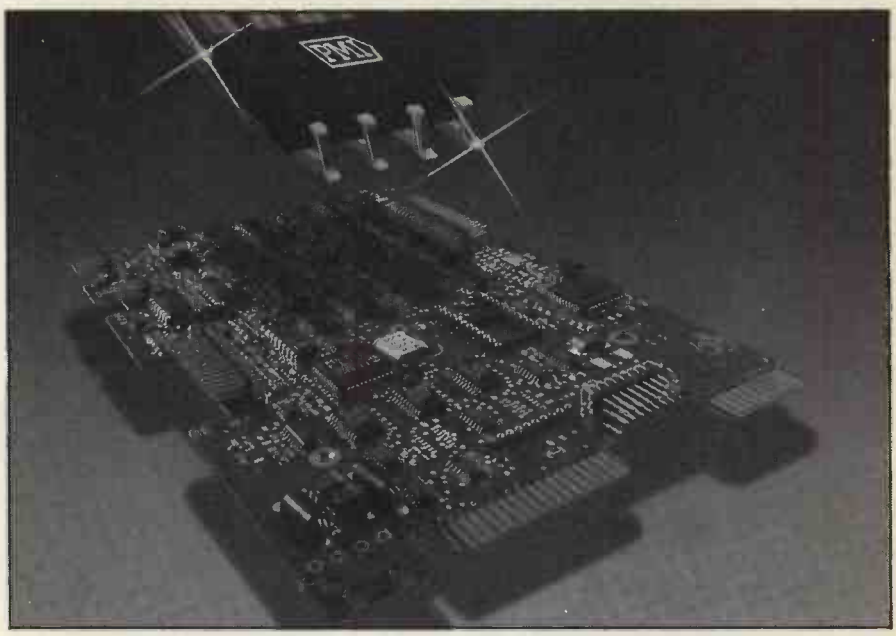

Illustration by courtesy of Precision Monolithics Inc.

In the case of the adhered component the method allows the pcb to be inverted for flow soldering. This technique permits smds to be secured on the track side of a pcb populated with conventional components ready for a single flow soldering operation. In the case of the solder-pasted component the solder paste itself forms the soldered joint after being subjected to a direct heat source – reflow soldering. Two lead shapes suited to these techniques are J-lead and gull-wing (Fig. 1).

As with all developing technologies, difficulties arise during manufacture. The flow soldering technique was developed originally for conventional components and when the method is applied to smd certain problems arise. Some mixed technology manufacturers are using 'old' wave soldering machines to solder mixed technology boards. These machines usually pass the pcb over a wave of flux followed by a single wave of solder. This was fine for conventional components but smds suffer from two main problems: shadowing and bridging. Shadowing is when the solder joint is not properly formed due to one component being in the shadow of another. Bridges occur when solder spans the gap between two components or tracks.

Double-wave machines have been developed to try to solve this problem but in doing so the components have had to run a temperature gauntlet, because it may take as long as 20 seconds to clear both waves. This is four times the recommended time that smds are supposed to be subject to temperatures around 240°C. Also, the first wave, designed to avoid shadowing by forcing solder between chip components, has the effect of washing away the active substance in the flux. This effect reduces solder drainage, creating heavy solder deposits and bridges. To overcome these

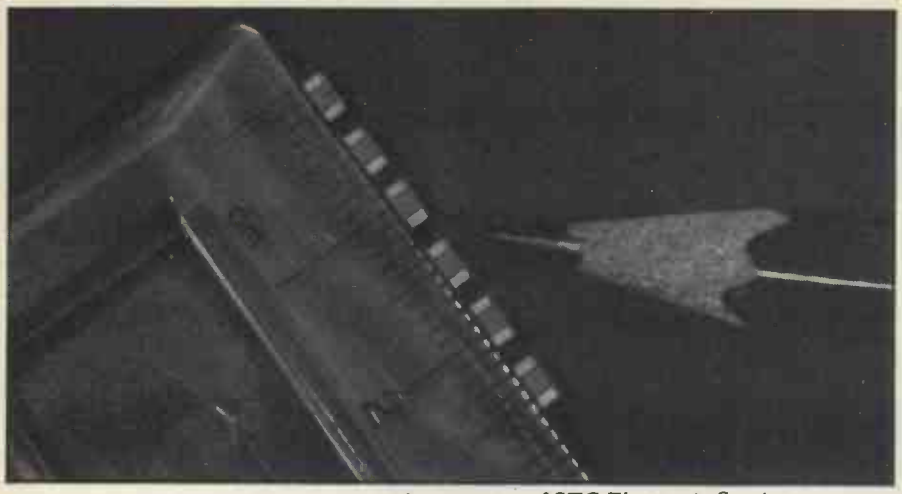

Kemet T491 SM tantalum chips. Photo by courtesy of STC Electronic Services

problems a suitable flux, such as Fry's Chipflow, must be used. Single and double wave machines have variable elements such as temperature and conveyor speed. For the best results when soldering smds it is necessary to vary these.

High degrees of success are realised using the reflow technique on smd assemblies, where solder pastes are fused by one of several available methods. The most popular methods are infra-red radiation and vapour-phase heat transfer. Solder paste deposited between the lead and the pad is melted by one of the fusing methods to form the joint. Advantages are that more complex and smaller circuits, such as hybrids, can be tackled effectively and efficiently. More recently highly-accurate laser soldering machines have been developed which heat only the lead, the pad and the paste, minimising thermal shock to components and pcbs.

Recent reports suggest that of the two techniques (wave and reflow) it is reflow that is providing the best results for soldering smds. More interestingly, the reports state that many smds are still soldered by hand for reasons such as low-cost, assured accuracy and joint quality, and convenience for small batch and prototype work. It seems the humble soldering iron will keep its place in the business until cost-effective automatic surface mount assembly is available to the majority of pcb manufacturers.

The information contained in these introductory paragraphs should be borne in mind when repairing or assembling pcbs containing surface mounted components.

SMT ASSEMBLY REPAIR

To begin with we will consider the various techniques for the removal and replacement of multi-lead quad packs.

Although it is not necessary to know the original assembly technique used it is advantageous to consider the three basic assembly methods when removing smds.

1 Wave soldering (adhesive under component).
2 Solder paste.
3 Standard soldering with cored solder.

ADHESIVES

When removing a component that has been secured to a pcb or substrate with adhesives, care must be taken to ensure that no damage is done to the substrate. In the case of a gull-wing multi-lead component, for example, the first step is to snip the leads with small cutters. The snipped leads should then be de-soldered and removed from the pads using snipe-nosed pliers. Use as little heat as possible when de-soldering to ensure that the track is not damaged or caused to lift from the pcb, and that future solderability is not affected. The track and pads need to be in good condition for re-soldering.

All that remains now is to physically remove the package from the board. This can be done by gently levering the device away from its adhesive bond using a small screwdriver for example. It is unlikely that a device will have tracks beneath it and so a clean removal should be possible, if care is taken.

For devices with J-leads the above technique may not be satisfactory because the leads cannot be seen when soldered. It may be necessary to remove the solder using a de-soldering wick or suction tool and then lift off the device as mentioned earlier with a small screwdriver.

In the case of devices that were mounted using cored solder or solder pastes it should be an easy task to remove the solder, using wick or suction. The device will then simply fall away, as no adhesive was used during assembly.

RE-SOLDERING

When re-soldering it is important to remember that some degradation of the pad's solderability may have occurred as a result of removal. Also bear in mind that some parts to be replaced may have a silver coating on soldering faces. To overcome the leaching effect of silver into the solder, due to silver's natural affinity for tin, the use of a two percent silver-loaded solder alloy is recommended.

Solderability is an important consideration when re-soldering. It is necessary to consider the level of activity of the flux (whether using cored solder or pastes). Mildly active (rosin-based) flux is preferred, if the solderability of substrates and components allows its use. If not, ensure that the activity is extended sufficiently to obtain a satisfactory result, but not into the range of superactive fluxes, where any entrapment might cause problems in use.

THE CHOICE

When using a solder paste for assembly one should use a material designed for the application. For example, it is extremely unlikely that enthusiasts will screen print new assemblies, therefore we must consider that application of the paste will be via a syringe. The solder powder used in the make-up of a solder paste is prepared from an alloy of tin/lead or tin/lead/silver. This powder is carefully selected with particles of a size that will eliminate the possibility of blocking by the paste in the syringe or needle. The powder is then blended with a flux carrier to form the solder paste. Consider carefully your choice of paste; advice from a top manufacturer should ideally be sought. Additionally it is advisable that only small quantities of paste are purchased at any one time, as pastes deteriorate with age.

To effectively produce the required result when replacing a component, ensure that the surfaces of the pads are free from any contamination. Also ensure that the pads and the solderable parts of the component are not touched by hand.

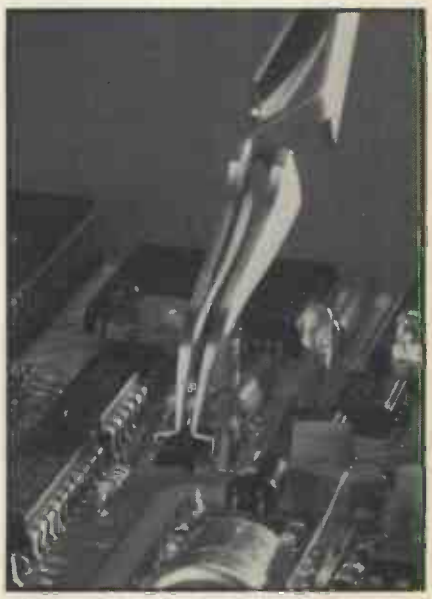

Self-gripping SMD tweezers manufactured by Ceka Works Ltd.

Sufficient paste should be applied to the pads to allow an adequate fillet to be formed when fused. In the case of flat-packs especially, excessive amounts of solder paste should be avoided as this may cause bridging. The design of the paste is so accurate that its properties encourage it to retract from non-metallic parts and migrate to metallic parts.

FUSION PASTE

Three methods may be employed when fusing solder paste.

1 Hot plate
2 Oven
3 Soldering iron

Do not use a naked flame.

When using the hot-plate technique it is extremely important to remove the pcb or substrate as soon as it is seen that fusion has occurred, otherwise other parts on the board may be subjected to secondary reflow.

The oven method suffers from the same problem in that its temperature has to be set at just above the melting point of the solder. Because it is not possible to see the job, it is even more difficult to ascertain when reflow has occurred.

Reflowing already soldered joints, as a result of using the hot-plate or oven technique, can create solderability problems because extended high temperatures can induce increased intermetallics.

A soldering iron then is the best choice. The bit should be chosen to suit the type of component and should ideally touch both surfaces bringing them to the correct temperature simultaneously. Solder paste can be dispensed for all the joints to be soldered and the component held in position by a non heat-transmitting material until all fusion has been implemented. (Flat-packs may not have to be secured. Because of their size they are unlikely to move.)

CORED SOLDER WIRES

Considerations for the choice of a suitable cored solder wire are basically the same as for pastes. Bear in mind, however, that the gauge must also suit the small assembly situation. As a rough guide, cored solder with diameters of more than 1.2mm should be avoided. It is not simply that too much solder might be inadvertently applied to the joint, but also that a potentially damaging amount of heat is required to melt the more substantial solders. The ideal size will be found in the 0.7mm to 1mm range. An obvious difficulty encountered when using wire solders is that only one joint can be soldered at a time.

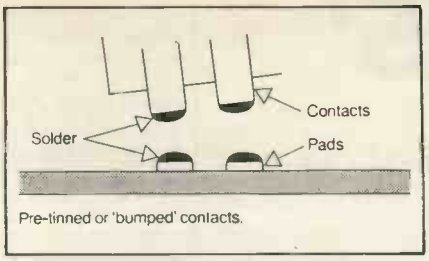

Fig.2 *SMT pre-tinned "bumping"*

NEW SM ASSEMBLIES

Enthusiasts, such as PE readers, are most likely to encounter one or more smds when working on kits for computers, musical and communications projects for example. Many of the pointers and techniques mentioned for repair and re-soldering are relevant for the new assembly. It should be borne in mind that mixed technology projects will contain sm components that need to be soldered at the same time as their conventional neighbours.

A combination of cored wire solder and solder paste may be used for mixed technology assemblies, particularly as the soldering is probably going to be on both sides of the pcb or substrate. The use of solder pastes is without doubt an advantage for the sm components on such assemblies.

Where wholly smt assemblies are concerned the use of pastes is again beneficial when compared to cored solder wire. The paste can be deposited for all components in a single operation.

The biggest problem, and probably the one that the enthusiast is most likely to have difficulty accepting, is that of 'tombstoning' following fusion. This is when chip components sit up on end, a problem that can easily occur when excessive paste is applied to one of the pads.

Other reasons for tombstoning include differing solderability levels at either end of a chip or on the pads. This is further evidence that the choice of a paste must ensure that its characteristics assist in overcoming these solderability problems, thus ensuring good joints. In the professional world, even distribution is achieved by screen printing the paste onto the pcb or substrate.

If difficulty is experienced with flat-packs they may be pre-tinned as can the pad areas to which they are to be soldered. A mild rosin flux may be used subsequently when fusing the device to the substrate. The pre-tinning of obstinate contact points may be carried out using a flux with a higher level of activity. In the smt world this pre-tinning is known as 'bumping' (see Fig. 2). It is important to remember that when such fluxes are used the area must be cleaned to remove any residue. Advice should be sought from a flux manufacturer as to a suitable flux and the cleaning requirement necessary for that flux.

RECOMMENDED FLUXES

Fry's Flowcream solder paste type 1024DG would be a good choice for the enthusiast. Similarly, for cored solder wire the Fryflow or Superspeed grade F270 (62% tin/2% silver/36% lead) are recommended. Diameters from 0.7mm to 1mm are available.

For further information contact the author, Fred Thorns, Fry's Metals Limited, Tandem Works, Merton Abbey, London, SW19 2PD. Telephone: 01-648 7020. PE

A diy SMT trials kit – see News and Market place.

19" RACK CASES

* Suitable for instruments, high quality amplifiers and many other applications that demand strength and professional finish * Black anodised aluminium front panel * Separate front mounting plate, no fixing screws visible on the front of the enclosure * Heavy gauge front panel is of brushed aluminium finish enhanced with two professional handles * With ventilation slits and plastic feet * Rear box manufactured from 1.1 mm steel finished in black. Rack mounting or free standing. Comes in quick assembly flat package.
Spare front panels available.

Order code	Panel Size W H (inch)	Rear Box W H D	Weight Kg	Price £
1U-10	19 x 1.75	17 x 1.5 x 10	2.4	23.50
2U-10	19 x 3.5	17 x 3.0 x 10	2.9	24.50
3U-10	19 x 5.25	17 x 5.0 x 10	3.5	26.50
2U-12	19 x 3.5	17 x 3.0 x 12	3.3	25.50
3U-12	19 x 5.25	17 x 5.0 x 12	4.0	27.50
4U-12	19 x 7.0	17 x 6.5 x 12	4.6	29.95

Please add £3.00 P&P for the first item and £1.50 for each additional item. To order send cheque/postal order. A new range of quality test equipment is now available at the lowest possible prices, e.g. digital power supply at £38.95. Customers who require information please send S.A.E. Mail order only. Trade and overseas orders welcome.

T.J.A. DEVELOPMENTS
Dept. PE, 19 Welbeck Road,
Harrow, Middlesex HA2 0RN.

MAKE YOUR INTERESTS PAY!

More than 8 million students throughout the world have found it worth their while! An ICS home-study course can help you get a better job, make more money and have more fun out of life! ICS has over 90 years experience in home-study courses and is the largest correspondence school in the world. You learn at your own pace, when and where you want under the guidance of expert 'personal' tutors. Find out how we can help YOU. Post or phone today for your FREE information pack on the course of your choice (tick one box only).

Electronics	☐	Radio, Audio and TV Servicing	☐
Basic Electronic Engineering (City & Guilds)	☐	Radio Amateur Licence Exam (City & Guilds)	☐
Electrical Engineering	☐	Car Mechanics	☐
Electrical Contracting/ Installation	☐	Computer Programming	☐
GCE over 40 'O' and 'A' level subjects			☐

ICS Name
Address P. Code
International Correspondence Schools, Dept EDS 88, 312/314 High St., Sutton, Surrey SM1 1PR. Tel: 01-643 9568 or 041-221 2926 (24 hrs).

READERS' LETTERS

SKY WATCH

Dear Ed,

To continue the theme of Mr. Trice's letter in PE Aug, I believe that phototransistors can be used to monitor light from the sky by passing the signal through a narrow passband filter which looks for a 100Hz component due to ambient street lighting being reflected from clouds – no signal, no clouds.

I also believe it may be possible to use two temperature sensors, one exposed to the sky, the other shielded. The theory is that if a clear period develops the exposed sensor cools more than the shielded one.

Ken Wood, Ipswich.

Dear Ed,

Would a barometric pressure sensor help in detecting cloudless sky conditions?

R. Rockwell, Medmenham.

In some areas sky pollution and low cloud will permit the use of a filtered optodetector for monitoring visibility. John Mason of Astronomy Now magazine, tells me the Dutch use them a lot. However, he says that British pollution levels are not so universally bad as the Dutch and so such a method would only have limited appeal. He also says that these detectors will not monitor high level cloud which also interferes with viewing.

I suspect that the temperature sensing method would be too subject to local conditions for it to be usable for detecting far distant situations. Nice idea though.

The suggestion of barometric pressure sensing is also interesting, but it seems we can get clouds under both high and low pressure conditions. Perhaps readers who build my electronic barometer in the Sept. and Oct. 88 editions might care to let me have feedback on this one.

Ed.

EFFECTIVE

Dear Editor,

I'm new to electronics and am interested in making my own effects units. But I am worried about how diy projects compare to commercial ready-made units. How can I assess this?

Tom Greenwood, Stockport.

There is no simple answer to your question. It is not usually practical to physically compare commercial ready-built products with diy designs, largely because of the sheer number of them.

As general rule diy designs can offer you benefits on two main levels. It is quite possible to assemble a kit for considerably less outlay than for a ready made equivalent, and to achieve similar results. It is also possible that a kit may well offer you more facilities than a comparably priced commercial unit.

I suggest that you read the manufacturer's data on commercial units, and the published texts for diy projects. Also bear in mind that there can be more satisfaction from building your own project than simply installing a unit that someone else has made. If you are building a unit yourself, though, you must be prepared to takes pains to follow the assembly instructions fully and not rush the work. If you are inexperienced then start off by building a simple one. If you do not have the time or the expertise to devote to a large kit then a ready-made unit is your best answer.

Ed.

GLITCHED HERTZ

Dear Ed,

Barry Fox in his column of July 88 used the symbol Hz when he is actually talking about cycles. Hertz is of course a measure of frequency, the number of cycles per second, and so I assume "a 1Hz glitch" ought to mean, say, a change of frequency from 50Hz to 49Hz. But he means the loss of one cycle of energy which, at 50Hz, lasts 0.02 seconds.

This kind of error seemed quite common in the early days of the change from c/s to Hz, but I've not seen it recently. It would be a pity to start a new wave of misunderstanding.

L.W. Barclay, Chelmsford.

Good point. If memory serves me correctly, the original electricity industry reports make the same mistake. I think we have all been bullied for so long into converting feet and inches into metres and centimetres, even when (as in the case of tape technology) the original standards were set to imperial measurements, that we no longer dare use what would often be more accurate terms.

Barry Fox

IF YOU HAVE ANY COMMENT, CRITICISMS OR SUGGESTIONS, WRITE AND LET US KNOW. WE ARE INTERESTED IN WHAT YOU THINK AND SAY.

Is the Wizard of OS/2 being squeezed out by MS DOS and Unix in the operational system battle? (See Leading Edge).

LEADING EDGE

Continued from page 8.

who make similar "clone" PCs. The company is now asking for a 5% royalty on PS/2 clones, plus back payment of 1% royalty on all old DOS clones. Firms which do not pay up their back royalties will not get a PS/2 licence and IBM claims to have patents which give it the legal right to make this demand.

IBM files over 500 patents every year in Europe alone. Some of them are very long – I know of one IBM patent on Gene Amdahl's work which takes up three bound volumes of the library shelves. It is equivalent in length to 300 conventional patents! This creates a cobweb of confusion over what exactly IBM has covered, and doubtless this explains why the company is so vague about its MCA technology. It could take years, probably decades, for lawyers and courts to sort out what patents clone makers are or are not infringing.

By no menas everyone agrees with IBM that the computer world will ditch MS DOS in favour of OS/2. Many users will stick with MS DOS, just as video users are more likely to stick with VHS than upgrade to the new and only partially compatible Super VHS format.

Those who want something better than DOS may well decide to make the break and switch to Unix. In fact other divisions of IBM already support the Unix standard. Although less friendly to use, Unix is more powerful than OS/2. Oracle, for instance, clearly favours Unix. Ian Fisher, software product manager at Oracle, sums up the situation neatly.

"OS/2 is much better than MS DOS but many people favour Unix. OS/2 is in the space between DOS and Unix and it could be squeezed out".

If so, then IBM and Microsoft may rue the day when they decide to discard MS DOS, scorn Unix for Personal Computers and try to convince the world to switch to OS/2.

PE

PE + EE DESIGN FEATURES

★LEARN BY BUILDING★ENJOY BY USING★

PROJECT KITS

★BE CREATIVE★RAISE YOUR SKILLS★GET KITTED!★

BURGLAR ALARM CONTROLLERS
DETECTORS DETER DELINQUENTS

MULTIZONE CONTROL (PE) SET280 £22.77
Two entry-zones, anti-tamper loop, personal attack, entry-exit timing, timed duration, automatic resetting, latching LED monitors.

SINGLE ZONE CONTROL (PE) SET279 £9.32
With timed duration control and latching LED monitor.

Both units can be used with any standard detection devices, such as contact or magnetic switches, pressure pads, tremblers, ultrasonics, infrared etc, and will activate standard bells, strobes or sirens.

CHIP TESTER (PE) SET258F £39.30
Computer controlled logic and chip analyser

CHORUS-FLANGER (PE) SET235 £59.99
Mono-stereo. Superb dual-mode effects.

CYBERVOX (EE) SET228 £44.76
Amazing robot type voice unit, with ring-modulator and reverb.

DISCO-LIGHTS (PE) SET245F £62.50
3 chan sound to light, chasers, auto level.

ECHO-REVERB (PE) SET218 £57.66
Mono-stereo. 200ms echo, lengthy reverb, switchable multitracking.

EPROM PROGRAMMER (PE) SET277 £25.25
Computer controlled unit for 4K Eproms.

EVENT COUNTER (PE) SET278 £31.50
4-digit display counting for any logic source.

MICRO-CHAT (PE) SET276 £64.50
Computer controlled speech synthesiser.

MICRO-SCOPE (PE) SET247 £44.50
Turns a computer into an oscilloscope.

MICRO-TUNER (PE) SET257 £55.32
Computer controlled, tuning aid and freq counter.

MORSE DECODER (EE) SET269 £22.16
Computer controlled morse code-decoder.

POLYWHATSIT! (PE) SET252 £122.69
Amazing effects unit, echo, reverb, double tracking, phasing, flanging, looping, pitch change, REVERSE tracking! 8K memory.

REVERB (EE) SET232 £27.35
Mono, with reverb to 4 secs, echo to 60ms.

RING MODULATOR (PE) SET231 £45.58
Fabulous effects generation, with ALC and VCO.

STORMS! (PE) £29.50 each unit
Raw nature under panel control! Wind & Rain SET250W. Thunder & Lightning SET250T.

★COMPUTER KITS
The software listing published with the computer kit projects are for use with C64, PET and BBC computers.

MANY MORE KITS IN CATALOGUE
KITS include PCBs and instructions. Further details in catalogue. PCBs also available separately.

DUAL-BEAM OSCILLOSCOPE – DETAILS IN CATALOGUE.

VOICE SCRAMBLER (PE) SET287 £42.22
32 switchable channels to keep your communications confidential.

WEATHER CENTRE (PE)
Keep the Met Office in check and monitor the wind speed and direction, rain, temperature, soil moisture and sunny days.
Six detector circuits – KIT 275.1 £18.07
Automatic metered control monitor circuit – KIT 275.2 £40.95
Optional computer control circuit – KIT 275.3 £14.20

ELECTRONIC BAROMETER (PE) SET285 £35.55
Computer controlled unit for monitoring atmospheric pressure.

GEIGER COUNTER (PE) SET264 £59.50
A nuclear radiation detector for environmental and geological monitoring. With built in speaker, meter and digital output. This project was demonstrated on BBC TV.

MANY MORE KITS IN CATALOGUE

Send 9"x4" SAE for detailed catalogue, and with all enquiries (overseas send £1.00 or 5 I.R.C.'s). Add 15% VAT. Add P&P – Sets over £50 add £2.50. Others add £1.50. Overseas P&P in catalogue. Text photocopies – Geiger 264 £1.50, others 50p, plus 50p post or large SAE. Insurance 50p per £50. MAIL ORDER, CWO, CHQ, PO, ACCESS VISA. Telephone orders: Mon-Fri, 9am – 6pm. 0689 37821. (Usually answering machine).

PHONOSONICS, DEPT PE8N, 8 FINUCANE DRIVE, ORPINGTON, KENT, BR5 4ED. MAIL ORDER

TECHNICIANS AND TRAINEES

Memory Maintenance Ltd. is a rapidly expanding computer maintenance company in West Swindon. We require technicians to work in our workshop. You will be involved in the repair of a wide range of electronic equipment. Duties will include bench repair, testing and use of diagnostic equipment. A strong interest in electronics is necessary and some knowledge of PCB manufacture and process would be preferred. We offer a good basic salary plus benefits.

Please apply in writing to:

The Personnel Dept.,
Memory Maintenance Ltd.,
16 Westmead Industrial Estate
Westlea, Swindon
Wiltshire SN5 7YT

SOFTMACHINE DISTRIBUTION LTD
FOR OEMs/TRADE

★ EPROM WRITER ★ EPROM ERASER
★ PC HAND TOOLS ★ CPU STANDS
★ COMPUTER CASES ★ POWER SUPPLY
★ MAIN BOARDS ★ MONITORS

TRADE HOURS: 10 - 6pm
TEL: 01-8077644 FAX: 01-807 2748

SOFTMACHINE DISTRIBUTION LTD

SOFTMACHINE DISTRIBUTION LTD
UNITS F18/F25, HARBET ROAD,
LEA VALLEY, EDMONTON,
LONDON, N18 3LR ENGLAND.

TUTORKIT MICROELECTRONICS TUTORS

Logic Tutors
OP Amp Tutors
I.C. Patchboards
GCSE Units
Computer Interfaces

Prices from £27.50 PLUS VAT

Including instruction manual and patch leads

*used by hundreds of schools in U.K. and overseas.

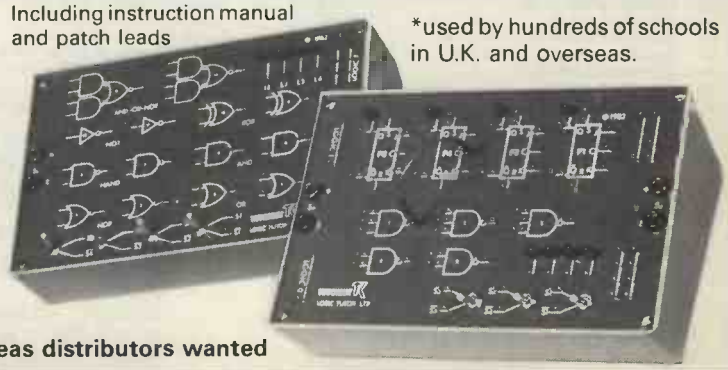

TUTORKIT PRODUCTS
(Div of Limrose Electronics Ltd
Llay Industrial Estate
Wrexham, Clwyd, U.K.
LL12 0TU. Tel 097 883 2285

Overseas distributors wanted

MAGENTA ELECTRONICS Ltd

PROJECT KITS

Magenta supply Full Kits: Including PCB's (or Stripboard), Hardware, Components, and Cases (unless stated). Please state Kit Reference Number, Kit Title, and Price, when ordering.
REPRINTS: If you do not have the issue of E.E. which includes the project, you will need to order the instruction reprint as an extra: 80p each. Reprints are also available separately–Send £1 in stamps.

REF NO.	KIT-TITLE	PRICE
789	AMSTRAD P10 Sept 88	(phone)
788	TIME SWITCH Aug 88	£17.61
787	SPIKEATER July 88	£3.99
786	UNIVERSAL NICAD CHARGER July 88	£6.99
785	ISOLINK July 88	£24.51
784	VIDEO WIPER July 88	£33.59
783	HEADLIGHT REMINDER June 88	£7.99
782	DOOR SENTINEL May 88	£12.81
781	SUPER SOUND EFFECTS GENERATOR May 88	£12.99
780	CABLE & PIPE LOCATOR April 88	£15.35
779	STEREO NOISE GATE April 88	£26.98
778	INDUCTIVE PROXIMITY DET. April 88	£8.63
777	LOW FUEL ALERT April 88	£6.43
772	SEMICONDUCTOR TESTER Mar 88	£23.51
776	LIE DETECTOR Mar 88	£11.80
775	ENVELOPE SHAPER Mar 88	£14.99
774	SOS ALERT Mar 88	£9.36
769	VARIABLE 25V-2A BENCH POWER SUPPLY Feb 88	£49.73
	CAR LAMP CHECKING SYST. Feb 88	£7.10
770	GAME TIMER Feb 88	£14.32
765	QUIZMASTER Jan 88	£18.96
767	TRANSISTOR CURVE TRACER (BBC)	£14.98
763	AUDIO SIGNAL GENERATOR Dec 87	£13.64
764	DUAL MAINS LIGHTS FLASHER Dec 87	£20.98
739	ACCENTED BEAT METRONOME Nov 87	£20.95
740	ACOUSTIC PROBE Nov 87 (less bolt & probe)	£16.26
741	BBC SIDEWAYS RAM/ROM Nov 87	£27.53
744	VIDEO CONTROLLER Oct 87	£29.14
745	TRANSTEST Oct 87	£9.70
734	AUTOMATIC PORCH LIGHT Oct 87	£17.17
735	CARAVAN FRIDGE ALERT Oct 87	£5.44
736	STATIC MONITOR Oct 87	£8.66
723	ELECTRONIC MULTIMETER Sept 87	£46.96
729	NOISE GATE Sept 87	£23.25
728	PERSONAL STEREO AMP Sept 87	£14.31
730	BURST-FIRE MAINS CONTROLLER Sept 87	£13.57
724	SUPER SOUND ADAPTOR Aug 87	£38.39
718	3 BAND 1.6-30MHz RADIO Aug 87	£26.53
719	BUCCANEER I.B. METAL DETECTOR inc. coils and case, less handle and hardware July 87	£26.45
720	DIGITAL COUNTER/FREQ METER (10MHz) inc.case July 87	£67.07
721	MONOMIX July 87	£21.00
722	FERMOSTAT July87	£12.14
711	VISUAL GUITAR TUNER Jun 87	£22.99
715	MINI DISCO LIGHT Jun 87	£12.59
709	WINDSCREEN WASHER WARNING May 87	£5.12
708	FRIDGE ALARM May 87	£9.80
707	EQUALIZER (IONISER) May 87	£15.53
705	BULB LIFE EXTENDER April 87 (less case)	£5.24
703	EXP. SPEECH RECOGNITION April 87	£20.98
700	ACTIVE I/R BURGLAR ALARM Mar 87	£35.65
581	VIDEO GUARD Feb 87	£8.39
583	CAR VOLTAGE MONITOR Feb 87	£12.58
584	SPECTRUM SPEECH SYNTH. (no ca)Feb 87	£20.92
578	SPECTRUM I/O PORT less case. Feb 87	£9.44
579	STEPPING MOTOR BOOSTER (for above)Feb 87	£5.45
	STEPPING MOTOR MD200 Feb 87	£16.80
575	HANDS-OFF INTERCOM (per station) inc. caseJan 87	£10.49
569	CAR ALARM Dec 86	£12.47
571	RANDOM NUMBER GENERATOR Dec 86	£15.72
568	BBC 16K SIDEWAYS RAM Dec 86	£12.97
564	CAR FLASHER WARNING Nov 86	£9.37
563	200MHz DIG. FREQUEN\ ' METER Nov 86	£62.98
562	10 WATT AUDIO AMPLI ..IR Oct 86	£36.70
561	LIGHT RIDER LAPEL BADGE Oct 86	£10.20
560	LIGHT RIDER DISCO VERSION	£19.62
559	LIGHT RIDER 16 LED VERSION	£13.64
558	SCRATCH BLANKER Sept 86	£55.83
556	INFRA-RED BEAM ALARM Sept 86	£28.35
555	FREEZER FAILURE ALARM Sept 86	£15.50
554	CAR TIMER Sept 86	£8.72
553	BATTERY TESTER Aug 86	£7.19
544	TILT ALARM July 86	£7.82
546	CARAVAN BATTERY MONITOR July 86	£17.17
547	SQUEEKIE CONTINUITY TESTER July 86	£3.52
548	ELECTRONIC SCARECROW July 86	£8.87
540	PERCUSSION SYNTH June 86	£30.43
542	PERSONAL RADIO June 86	£11.53
543	WATCHDOG June 86	£8.24
529	MINI STROBE May 86	£13.86
528	PA AMPLIFIER May 86	£26.95
523	STEREO REVERB Apr 86	£26.44
524	VERSATILE PSU Apr 86	£24.69
526	FREELOADER Apr 86	£8.48
513	BBC MIDI INTERFACE Mar 86	£27.94
514	INTERVAL TIMER Mar 86	£10.87
515	STEREO HI-FI PRE-AMP	£49.19
512	MAINS TESTER & FUSE FINDER Mar 86	£8.82
503	FUNCTION GENERATOR Feb 86	£24.84
504	POWER SUPPLY FOR ABOVE	£7.62
497	MUSICAL DOOR BELL Jan 86	£10.72
493	DIGITAL CAPACITANCE METER Dec 85	£41.56
481	SOLDERING IRON CONTROLLER Oct 85	£5.47
473	R.I.A.A. PRE-AMP Sept 85	£16.74
464	STEPPER MOTOR INTERFACE FOR THE BBC COMPUTER less case Aug 85	£11.88
	1035 STEPPER MOTOR EXTRA	£14.50
	OPTIONAL POWER SUPPLY PARTS	£5.14
461	CONTINUITY TESTER July 85	£6.20
458	AMSTRAD USER PORT July 85	£17.67
455	ELECTRONIC DOORBELL June 85	£7.56
453	GRAPHIC EQUALISER June 85	£26.94
444	INSULATION TESTER Apr 85	£19.58
432	GAMES TIMER Jan 85	£9.11
430	SPECTRUM AMPLIFIER Jan 85	£6.91
417	DOOR CHIME Dec 84	£18.78
392	BBC MICRO AUDIO STORAGE SCOPE INTERFACE Nov 84	£36.25
394	PROXIMITY ALARM Nov 84	£22.66
387	MAINS CABLE DETECTOR Oct 84	£5.53
386	DRILL SPEED CONTROLLER Oct 84	£8.88
381	GUITAR HEAD PHONE AMPLIFIER Sept 84	£7.99
362	VARICAP AM RADIO May 84	£13.15
363	EXPERIMENTAL POWER SUPPLY May 84	£23.58
364	SIMPLE LOOP BURGLAR ALARM May 84	£17.16
358	FUSE/DIODE CHECKER Apr 84	£4.35
356	QUASI STEREO ADAPTOR Apr 84	£13.73
344	SIGNAL TRACER Feb 84	£18.77
337	BIOLOGICAL AMPLIFIER Jan 84	£24.14
334	CONTINUITY TESTER Dec 83	£12.58
332	CHILDREN'S DISCO LIGHTS Dec 83	£10.48
333	NOVEL EGG TIMER Dec 83 inc. case	£12.90
301	STORAGE 'SCOPE INTERFACE FOR BBC MICROAug 83 less software	£19.34
299	HIGH POWER INTERFACE BOARD Aug 83 no case	£12.99
292	USER PORT I/O BOARD less cable + plug	£13.22
293	USER PORT CONTROL BOARD July 83 less cable+plug+case	£31.67
277	MW PERSONAL RADIO less case,May 83	£9.60
278	MOISTURE DETECTOR May 83	£6.88
270	NOVELTY EGG TIMER April 83less case	£6.91
263	BUZZ OFF March 83	£5.68
262	PUSH BIKE ALARM Feb 83	£14.77
255	ZX TAPE CONTROL Nov 82	£8.98
242	2- WAY INTERCOM July 82 no case	£5.69
243	REFLEX TESTER July 82	£9.79
240	EGG TIMER June 82	£6.86
237	CAR LED VOLTMETER less case. May 82	£4.00
225	CAMERA OR FLASH GUN TRIGGER Mar 82 less tripod bushes	£17.20
205	SUSTAIN UNIT Oct 81	£17.63
206	TAPE NOISE LIMITER Oct 81	£5.976.27
207	HEADS AND TAILS GAME Oct 81	£3.47
209	PHOTO FLASH SLAVE Oct 81	£4.79
211	FUZZ BOX Oct 81	£10.05
197	0-12V POWER SUPPLY Sept 81	£24.55
181	SOIL MOISTURE INDICATOR E.E. May 81	£5.66
149	GUITAR PRACTICE AMPLIFIER Nov 80	£22.95
	SOUND TO LIGHT Nov 80 3 channel	£29.38
124	SPRING LINE REVERB UNIT Jan 80	£34.27
122	UNIBOARD BURGLAR ALARM Dec 79	£8.38
118	DARKROOM TIMER July 79	£4.03
113	MICROCHIME DOORBELL Feb 79	£21.99
111	SOUND TO LIGHT Sept 78	£10.98
108	IN SITU TRANSISTOR TESTOR Jun 78	£9.42
106	WEIRD SOUND EFFECTS GEN Mar 78	£7.82
101	ELECTRONIC DICE Mar 77	£6.26

TOP KITS

MOSFET VARIABLE BENCH 25V 2.5A POWER SUPPLY

A superb design giving 0-25V and 0-2.5A. Twin panel meters indicate Voltage and Current. Voltage is variable from zero to 25V.
Current-Limit control allows Constant Current charging of NICAD batteries, and protects circuits from overload. A Toroidal transformer MOSFET power output device, and Quad op-amp IC design give excellent performance.

OUR KIT REF. 769 £49.73

COMPONENTS, KITS, BOOKS, TOOLS, MOTORS, GEARS, PULLEYS, OPTICAL FIBRES, ROBOTICS, AND MUCH MUCH MORE–IN OUR
NEW CATALOGUE £1.00

MOTOR–GEARBOX ASSEMBLIES

Miniature gearboxes complete with quality electric motor. Variable ratios by fitting 1 to 6 gears. 1.5–4.5v, 3–2200 rpm. Long 3mm shaft. Ideal for robots and buggies.

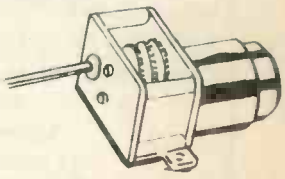

SMALL (MGS) £3.49 LARGE (MGL) £3.98

ADVENTURES WITH ELECTRONICS

An easy to follow book suitable for all ages. No soldering, uses an S DEC breadboard. Lots of clear diagrams and instructions to build 16 projects. Component pack includes S DEC and all components for the projects.

LEGO Technic Sets

TEACHERS WE ARE STOCKISTS OF THE WHOLE RANGE. CONTACT US FOR BROCHURES. VERY COMPETITIVE PRICES AND QUICK DELIVERIES

STEPPING MOTORS 12 VOLT

48 STEPS	200 STEPS
1035	MD200
£14.50	£16.80

OPTICAL FIBRES TRIAL PACK OF 10 METRES. Nine assorted types & data.
£1.99

MAGENTA ELECTRONICS LTD.
SHOP NOW OPEN – CALLERS WELCOME

PE11, 135 HUNTER STREET,
BURTON-ON-TRENT,
STAFFS. DE14 2ST.
0283 65435, Mon-Fri 9-5
Access/Barclaycard (Visa) by phone or post.
24 hr Answerphone for credit card orders.
Our prices include VAT

ADD £1 P&P TO ALL ORDERS.
PRICES INCLUDE VAT.
SAE ALL ENQUIRIES.
OFFICIAL ORDERS WELCOME
OVERSEAS: Payment must be sterling.
IRISH REPUBLIC and BFPO. UK PRICES.
EUROPE: UK PRICES plus 10%.
ELSEWHERE: write for quote
SHOP HOURS: 9-5 MON-FRI.

0283 65435

FROM MAGENTA

A SELECTION OF OUR BEST PROJECT KITS

As usual these kits come complete with printed circuit boards, cases, all components, nuts, screws, wire etc. All have been tested by our engineers (many of them are our own designs) to ensure that you get excellent results.

INSULATION TESTER

An electronic High Voltage tester for mains appliances and wiring. An inverter circuit produces 500 volts from a PP3 battery and applies it to the circuit under test. Reads insulation up to 100 Megohms. Completely safe in use.

OUR KIT REF 444 £19.58

DIGITAL CAPACITANCE METER

Simple and accurate (1%) measurements of capacitors from a few pF up to 1,000 uF. Clear 5 digit LED display indicates exact value. Three ranges - pF, nF, and uF. Just connect the capacitor, press the button and read the value.

£41.55
OUR KIT
REF 493

3 BAND SHORTWAVE RADIO

Covers 1 6 30 MHz in 3 bands using modern miniature coils. Audio output is via a built-in loudspeaker. Advanced design gives excellent stability, sensitivity and selectivity. Simple to build.

OUR KIT REF 718 £25.27

DIGITAL FREQUENCY METER 200 MHz

An 8 digit meter reading from A.F. up to 200 MHz in two ranges. Large 0.5" Red LED display. Ideal for AF and RF measurements, Amateur and C.B. frequencies.

KIT REF 563 £62.98

'EQUALISER' IONISER

A mains powered Ioniser that produces a breeze of negative ions in the air. A compact, safe, simple unit that uses a negligible amount of electricity.

KIT REF 707 £15.53

SUPER SOUND--EFFECTS GENERATOR

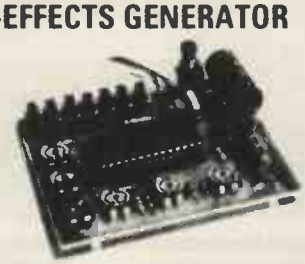

A wide range SN76477 sound effects board giving: Bird Chirps, Sirens, Helicopters, Explosions, Phaser Guns, Steam Train sounds, and more. Supplied without a case.

KIT REF 781 £12.99

For KITS & COMPONENTS - Choose the easy way – with TK

*refundable with first order

Send 50p* & SAE for CATALOGUE

ORDERS: RING (01) 567 8910 – 24 HRS.

ELECTRONIC GUARD DOG KIT

One of the best deterrents to a burglar is a guard dog and this new kit provides the barking without the bite! The kit when assembled can be connected to a doorbell, pressure mat or any other intruder detector and will produce a random series of threatening barks making the would-be intruder think you have a guard dog and try his luck elsewhere. The kit is supplied complete with high quality PCB, mains transformer, all components and instructions. The kit even includes a horn speaker which is essential to produce the loud sound required. The "dog" can be adjusted to produce barks ranging from a Terrier to an Alsatian and contains circuitry to produce a random series of barks giving a more realistic effect. Don't delay, fit one before you go on holiday and let our dog help you guard your home.

XK125 Complete kit of parts **£24.00**

POWER STROBE KIT

Designed to produce a high intensity light pulse at a variable frequency of 1 to 15Hz, this kit also includes circuitry to trigger the light from an external voltage source (eg. a loudspeaker) via an opto isolator.

Instructions are also supplied on modifying the unit for manual triggering, as a slave flash in photographic applications or as a warning beacon in security applications. The kit includes a high quality pcb, components, connectors, 5Ws strobe tube and full assembly instructions. Supply: 240V ac. Size: 75x50x45.

XK124 Stroboscope Kit **£13.75**

VERSATILE REMOTE CONTROL KIT

This kit includes all components (+ transformer) to make a sensitive IR receiver with 16 logic outputs (0-15V) which with suitable interface circuitry (relays, triacs, etc – details supplied) can be used to switch up to 16 items of equipment on or off remotely. The outputs may be latched (to the last received code) or momentary (on during transmission) by specifying the decoder IC and a 15V stabilised supply is available to power external circuits.

Supply: 240V AC or 15–24V DC at 10mA. Size (excluding transformer) 9 x 4 x 2 cms. The companion transmitter is the MK18 which operates from a 9V PP3 battery and gives a range of up to 60ft. Two keyboards are available MK9 (4-way) and MK10 (16-way), depending on the number of outputs to be used.

MK12 IR Receiver (incl. transformer) **£16.30**
MK18 Transmitter **£7.50**
MK9 4-Way Keyboard **£2.20**
MK10 16-Way Keyboard **£6.55**
601 133 Box for Transmitter **£2.60**

SUPER-SENSITIVE FM MICROBUG

Highly sensitive FM transmitter measuring only 45 x 25 x 15mm, including the built-in microphone. Frequency 88-100MHz enabling reception on a standard domestic FM radio. Range approximately 300m depending on terrain. Powered by 9V PP3 (7mA). Its small size and highly sensitive electret microphone makes it ideal for surveillance, baby alarm, etc.

INTRODUCTORY PRICE **£5.50**

MICROPROCESSOR TIMER KIT

Designed to control 4 outputs independently switching on and off at present times over a 7-day cycle. LED display of time and day, easily parogrammed via 20 way keyboard. Ideal for cnetral heatlng control including different switching time for weekends. Battery back-up circuit. Includes box 18 time settings.

CT6000K **£47.20**
XK114 Relay kit for CT6000 Includes PCB connectors and one relay. Will accept up to 4 relays 3A/240V c/o contacts **£4.30**
701 115 Additional relays **£1.80**

DISCO LIGHTING KITS

DL1000K This value-for-money 4-way chaser features by-directional sequence and dimming. 1kW per channel **£19.25**
DLZ1000K — A lower cost uni-directional version of the above. Zero switching to reduce Interference **£10.80**
DLA/1 Optional opto input allowing audio 'beat'/light response **77p**
DL3000K — 3-channel sound to light kit features zero voltage switching, automatic level control and built-in microphone. 1kW per channel. **£15.60**

The DL8000K is an 8-way sequencer kit with built in opto-isolated sound to light input which comes complete with a pre-programmed EPROM containing EIGHTY — YES 80 different sequences including standard flashing and chase routines. The KIT includes full instructions and all components (even the PCB connectors) and requires only a box and a control knob to complete. Other features include manual sequence speed adjustment, zero voltage switching. LED mimic lamps and sound to light LED and a 300W output per channel. And the best thing about it is the price: **ONLY £31.50.**

GIANT SOLAR CELLS

NOW IN STOCK these giant size solar panels 12 x12in will deliver 12 volts 200mA in bright sunlight and 11.5 volts 60mA on a typical British summer day (dull and overcast). HUNDREDS OF USES in the car or caravan, e.g. Charging NiCads, powering low voltage circuits where mains or battery supplies are inconvenient or coupled to a lead acid battery and a simple inverter you could build yourself a self contained mains supply for low power appliances. Stock No. 303 145. £14.50 (plus £1.75 for p&p on total order).

TK ELECTRONICS
13 BOSTON RD.
LONDON W7 3SJ
Tel: 01 567 8910

SEND 9" x 6" SAE & 50p FOR CATALOGUE OR CALL AT SHOP Mon-Fri 9-5 pm Saturday 10-4 pm

ORDERING INFORMATION:
ALL PRICES EXCLUDE VAT

FREE P&P on orders over £20 (UK only), otherwise add 75p + VAT. Overseas P&P: Europe £2.75. Elsewhere £6.50. Send cheque/PO/Barclaycard/Access No. with order. Giro No. 529314002.

LOCAL AUTHORITY AND EXPORT ORDERS WELCOME
GOODS BY RETURN SUBJECT TO AVAILABILITY

RACKS CABINETS & FANS | SURPLUS BOUGHT & SOLD | ELECTRONIC COMPONENTS & OBSOLETE IC'S | MONITORS VDU'S & PLOTTERS | 1000'S OF ITEMS IN STOCK | COMPUTER SYSTEMS & PERIPHERALS | RELAYS MOTORS & STEPPERS | POWER SUPPLIES & INVERTORS | ALL TYPES OF TEST EQUIPMENT | PRINTERS DISK DRIVES & KEYBOARDS | VIDEO EQUIPMENT & CAMERAS

THE 'ALADDINS' CAVE OF ELECTRONIC & COMPUTER EQUIPMENT

COLOUR MONITORS

16" Decca, 80 series budget range, colour monitors, features include: PIL tube, attractive teak style case, guaranteed 80 column resolution, only seen on monitors costing 3 times our price, ready to connect to a host of computer or video outputs. Manufacturers fully tested surplus, sold in little or hardly used condition with 90 day full RTB guarantee. 1000's Sold to date.
DECCA 80 RGB - TTL + SYNC Input for BBC type interface etc.
DECCA 80 COMP 75Ω composite video input with integral audio amp & speaker ideal for use with video recorder or TELEBOX ST or any other audio visual use. **Only £99.00 (E)**

HIGH DEFINITION COLOUR

BRAND NEW **CENTRONIC 14"** monitors in attractive style moulded case featuring **hi res** Mitsubushi 0.42 dot pitch tube with 669 x 507 pixels. 28Mhz bandwidth. Full 90 day guarantee.
Order as **1004-N2** for TTL + sync RGB for **BBC** etc **£159.00 (E)**
1003-N1 for **IBM PC** etc fully **CGA** equiv **£189.00 (E)**
1005-N2 RGB interface for **QL** 85 columns. **£169.00 (E)**

20 " & 22" AV Specials

Superbly made, UK manufacture, PIL tube, all solid state colour monitors, complete with composite video and sound inputs, attractive teak style case, Ideal for a host of applications including Schools, Shops, Disco's, Clubs etc. Supplied in EXCELLENT little used condition with 90 day guarantee.
20" Monitor £165.00 (F) **22" Monitor £185.00 (F)**

MONOCHROME

MOTOROLA M1000-100 5" CRT black & white compact chassis monitor measuring only cm 11.6h ,12w, 22d, ideal for CCTV or computer applications. Accepts standard Composite video or individual H & V syncs. Operates from 12v DC at apprx 0.8a. Some units may have minor screen marks, but still in very usable condition. Fully tested with 30 day guarantee & full data **Only £29.00 (C)**
Fully cased as above, with attractive moulded, desk standing swivel and tilt case Dim. cm 12h,14.5w,26d. **£39.00 (C)**
JVC type 751-7 5" ultra compact black & white chassis monitor for 12v 0.7a DC operation Dim cm **11h**,14w,18d. Simple DIY circuit data included to convert data and separate sync input to composite video Input. Ideal portable equipment etc, Supplied with full data. **Brand New £65.00 (B)**
KGM 324 9" Green Screen, **Little used fully cased**, mains powered high res monitors with standard composite video input. Fully tested and in excellent condition **£49.00 (E)**
20" Black & White monitors by AZTEK, COTRON & NATIONAL All solid state, fully cased monitors, Ideal for all types of AV or CCTV applications. Units have standard composite video inputs with integral audio amp and speaker. Sold in good, used condition- fully tested with 90 day guarantee. **Only £85.00 (F)**

FLOPPY DRIVE SCOOP
Drives from Only £39.95

A MASSIVE purchase of standard 5.25" disk drives enables us to offer you prime product at all time super low prices. All units unless stated are removed from often **BRAND NEW** equipment, **fully tested** and shipped to you with a **full 120 day guarantee.** All units offered operate from + 5 and + 12 volts DC, are of standard size and accept the common standard 34 way interface connector.
TANDON TM100-2A IBM compatible 40 track FH double sided **Only £39.95 (B)**
TANDON TM101-4 FH 80 track double sided **Only £49.95 (B)**
JAPANESE Half Height double sided drives by **Canon, Tec,** Toshiba etc. Specify 40 or 80 track **Only £75.00 (B)**
TEAC FD55-F 40-80 track double sided Half Height **Brand New £115.00 (B)**

DISK DRIVE ACCESSORIES

34 Way interface cable and connector single **£5.50, Dual £8.50 (A)**
5.25" DC power cable **£1.75.** Fully cased PSU for **2 x 5.25"** Drives **£19.50 (A)** Chassis PSU for 2 x 8" drives **£39.95 (B)**

8" DISK DRIVES

SUGART 800/801 single sided refurbished **£175.00 (E)**
SUGART 851 double sided refurbished **£260.00 (E)**
MITSUBISHI M2894-63 Double sided switchable Hard or Soft sector **BRAND NEW £275.00 (E)**
SPECIAL OFFER Dual **8"** drives with 2mb capacity in smart case with integral PSU **ONLY £499.00 (F)**

COMPUTER SYSTEMS

TATUNG PC2000. Big brother of the famous **EINSTEIN**, the **PC2000** professional 3 piece system comprises: Quality high res **GREEN 12"** monitor, Sculptured **92 key keyboard** and plinth unit containing the **Z80A CPU** and all control electronics **PLUS 2** Integral **TEAC 5.25" 80 track double sided disk drives.** Many other features include **Dual 8" IBM format** disk drive support, Serial and parallel outputs, full expansion port, 64k ram and ready to run software. Supplied complete with **CPM, WORDSTAR, BASIC** and accounts package. **BRAND NEW**
Full 90 day guarantee.
Original price OVER £1400 **Only £299(E)**

EQUINOX (IMS) S100 system capable of running either **TURBO** or standard **CPM**. Unit features heavy duty box containing a powerful **PSU, 12 slot S100** backplane, & **dual 8" double sided disk drives.** Two individual **Z80** cpu boards with **192k of RAM** allow the use of multi user software with upto **4 RS232 serial** interfaces. Many other features include battery backed real time clock, all IC's socketed etc. Units in good condition and tested prior despatch, no documentation if present, hence price of only **£245.00 (F)**
S100 PCB's IMS A465 64K dynamic RAM. **£55.00 (B)** IMS A930 FDC controller **£85.00 (B).** IMS A862 CPU & i/o **£65.00 (B)**

SAE for full list of other S100 boards and accessories.

PRINTERS

Bulk purchase brings you incredible savings on a range of printers to suit all applications. Many other "one off bargains" can be seen at our South London Shop

HAZELTINE ESPRINT Small desktop **100 cps** print speed with both **RS232** and **CENTRONICS** interfaces. Full pin addressable graphics and 6 user selecable type fonts. Up to 9.5" single sheet and tractor paper handling Brand New Only **£199.00 (E)**
CENTRONICS 150 series. A real workhorse for continuous use with tractor feed paper, either in the office, home or factory, desk standing, **150 cps** 4 type fonts and choice of interfaces. Supplied **BRAND NEW** Order as:
150-SN up to 9.5" paper handling **£185.00 (E)**
150-SW up to 14.5" paper handling **£225.00 (E)**
150-GR up to 14.5" paper plus full graphics **£245.00 (E)**
When ordering please specify RS232 or CENTRONICS interface.

Ultra Fast 240 cps NEWBURY DATA NDR 8840 High Speed Printers Only £449 !!

A special purchase from a now defunct Goverment Dept enables us to offer you this amazing British Made, quality printer at clearance prices, **SAVING YOU OVER £1500 !!** The **NDR8840** features high **speed 240 cps** print speed with integral, fully adjustable paper tractor, giving exceptional fast paper handling for multi part forms etc.The unit features **10** selectable type fonts giving **up to 226 printable characters on a single line.** Many other features include Internal electronic vertical and horizontal tabs, Self test, 9 needle head, Up to 15.5" paper, 15 million character ribbon cartridge life and standard **RS232 serial interface.** Sold in **SUPERB** tested condition with 90 day guarantee **Only £449.00 (F)**
EPSON model 512 40 column 3.5" wide paper roll feed, high speed matrix (3 lines per second) printer mechanism for incorporation in point of sale terminals, ticket printers, data loggers etc. Unit features bi directional printhead and integral roll paper feed mech with tear bar. Requires DC volts and simple parallel external drive logic.Complete with data. **RFE** and tested **Only £49.95 (C)**
EPSON model 542 Same spec as above model, but designed to be used as a slip or flatbed printer. Ideal as label, card or ticket printer. Supplied fully cased in attractive, small, desk top metal housing. Complete with data. **RFE** and tested **Only £55.00 (D)**
PHILIPS P2000 Heavy duty **25 cps** bi directional daisy wheel printer. Fully **DIABLO, QUME, WORDSTAR** compatible. Many features include full width platten - up to 15" paper, host of available daisy wheels, single sheet paper handling, superb quality print. Supplied complete with user manual & 90 day guarantee **plus FREE** dust cover & daisy wheel. **BRAND NEW Only £225.00 (E)**

Most of the items in this Advert, plus a whole range of other electronic components and goodies can be seen or purchased at our

** South London Shop **

Located at **215 Whitehorse Lane, London SE25.** The shop is on the main **68 bus route** and only a few miles from the main A23 and South Circular roads. **Open Monday to Saturday from 9 to 5.30,** parking is unlimited and **browsers are most welcome.** Shop callers also save the cost of carriage.

MODEMS

Modems to suit all applications and budgets. Please contact our technical sales staff if you require more information or assistance.

SPECIAL PURCHASE V22 1200 baud MODEMS ONLY £149 !!

MASTER SYSTEMS type 2/12 microprocessor controlled **V22 full duplex 1200** baud. This fully BT approved modem employs all the latest features for error free data comms at the staggering speed of 120 characters per second, **saving you 75% of your BT phone bills and data connect time !!** Add these facts to our give away price and you have a superb buy !! Ultra slim unit measures only 45 mm high with many integral features such as Auto answer, Full LED status indication, RS232 interface, Remote error diagnostics, SYNC or ASYNC use, SPEECH or DATA switching, integral mains PSU, 2 wire connection to BT line etc. Supplied fully tested, **EXCELLENT** slightly used condition with data and full 120 day guarantee.

LIMITED QUANTITY **Only £149 (D)**

CONCORD V22 1200 baud as new **£330.00(E)**
CONCORD V22 1200-2400 BIS **£399.00 (E)**
RIXON Ex BT Modem 27 V22 1200 **£225.00 (E)**
DATEL 4800 / RACAL MPS 4800 EX BT modem for 4800 baud sync use. **£295.00 (E)**
DATEL 2412 2780/3780 4 wire modem unit EX BT fully tested. **£199.00 (E)**
MODEM 20-1 75-1200 BAUD for use with PRESTEL etc EX BT fully tested. **£49.00 (E)**
TRANSDATA 307A 300 baud acoustic coupler with RS232 I/O Brand New **£49.00 (E)**
RS232 DATA CABLES **16** ft long 25w D plug to 25 way D socket. Brand New Only **£9.95 (A)**
As above but 2 metres long **£4.99 (A)**
BT plug & cable for new type socket **£2.95 (A)**

RECHARGEABLE BATTERIES

Maintenance free, sealed longife LEAD ACID
A300 12v 3 Ah **£13.95 (A)**
A300 6v 3 Ah **£9.95 (A)**
A300 6-0-6 v 1.8 Ah **RFE £5.99 (A)**

NICKEL CADMIUM

Quality 12 v 4 Ah cell pack. Originally made for the **TECHNICOLOUR** video company, this unit contains 10 high quality **GE nicad, D** type cells, configured in a smart robust moulded case with DC output connector. Dim cm 19.5 x 4.5 x 12.5. Ideal portable equipment etc **BRAND NEW £24.95 (B)**
12v 17 Ah Ultra rugged, all weather, virtually indestructable **refillable NICAD** stack by **ALCAD.** Unit features **10 x** individual type **XL1.5** cells in wooden crate. Supplied to the **MOD** and made to deliver exceptionally high output currents & withstand long periods of storage in discharged state. Dim cm 61 x 14 x 22 **Cost over £250** Supplied unused & tested complete with instructions **£95.00 (E)**
EX EQUIPMENT NICAD cells by GE Removed from equipment and believed in good, but used condition. **'F' size** 7Ah **6 for £8 (B)** Also **'D' size** 4Ah **4 for £5 (B)**

BRAND NEW 85 Mb Disk Drives ONLY £399

End of line purchase enables this brand new unit to be offered at an all time super low price. The **NEC D2246 8" 80 Mb** disk drive features full CPU control and industry standard **SMD interface,** Ultra high speed data transfer and access times leave the good old ST506 interface standing. Supplied **BRAND NEW** with full manual **Only £399.00 (E)**
Dual drive, plug in **135 Mb** sub system for **IBM AT** unit in case with PSU etc. **£1499.00 (F)**
Interface cards for **upto 4 dives** on IBM AT etc available **Brand new at £395.00**

POWER SUPPLIES

All power supplies operate from 220-240 v AC Many other types from 3v to 10Kv in stock .Contact sales office for more details.
PLESSEY PL12/2 Fully enclosed 12v DC 2 amp PSU. Regulated and protected. Dim cm 13.5 x 11 x 11 **New £16.95 (B)**
AC-DC Linear PSU outputs of + 5v 5.5a, -5v 0.6a, + 24v 5a. Fully regulated and short proof. Dim cm 28 x 12.5 x 7 **New £49.50 (C)**
POWER ONE PHC 24v DC 2 amps Linear PSU fully regulated **New £19.95 (B)**
BOSHERT 13088 switch mode supply ideal disk drives or complete system. + 5v 6a. + 12 2.5a,-12 0 .5a, 5v 0.5a. Dim cm 5.6 x 21 x 10.8 **New £29.95 (B)**
BOSHERT 13090 same as above spec but outputs of + 5v 6a, + 24v 1.5a, + 12v 0.5a,-12v 0.5a **New £39.95 (B)**
GREENDALE 19AB0E 60 Watt switch mode outputs + 5v 6 a. + 12v 1a, -12v 1a, + 15v 1a.D. 11 x 20 x 5.5 **RFE Tested £24.95 (B)**
CONVER AC130-3001 High grade VDE spec compact 130 watt switch mode PSU. Outputs give + 5v 15a, -5v 1a, + &-12v 6a. Dim 6.5 x 27 x 12.5 Current list price £190. Our price **New £59.95.00 (C)**
FARNELL G6/40A Compact 5v 40 amp switch mode fully enclosed **New £140.00 (C)**
FARNELL G24 5S Compact 24v 5 amp switch mode fully enclosed **New £95.00 (C)**

Special Offer EXPERIMENTORS PSU — ONLY £16.95 (C)

Made to the highest spec for **BT** this unit gives several fully protected DC outputs most suited to the **Electronics Hobbyist.** + 5v 2a, + &-12v 1a, - + 24v 1a and + 5v fully floating at 50ma. Ideal for school labs etc. Quantity discount available.
Fully tested with data RFE = Removed From Equipment

The AMAZING TELEBOX Converts your monitor into a QUALITY COLOUR TELEVISION

Brand new high quality, fully cased, 7 channel UHF PAL TV tuner system. Unit simply connects to your TV aerial socket and video monitor turning same into a fabulous colour TV. Dont worry if your monitor doesn't have sound, the TELEBOX even has an integral audio amp for driving a speaker plus an auxillary output for Headphones or HI Fi system etc. Many other features: LED Status Indicator, Smart moulded case, Mains powered, Built to BS safety specs. Many other uses for TV sound or video etc. Supplied BRAND NEW with full 1 year guarantee. **Carriage code (B)**

TV SOUND & VIDEO TUNER ONLY £29.95

TELEBOX ST for monitors with composite video input **£29.95**
TELEBOX STL as ST- but fitted with integral speaker **£34.95**
TELEBOX RGB for use with analogue RGB monitors **£59.95**

Colour when used with colour CRT. RGB version NOT suitable for IBM-CLONE type colour monitors . DATA sheet on request. PAL overseas versions CALL.

COOLING FANS

Keep your hot parts COOL and RELIABLE with our range of BRAND NEW cooling fans.
AC FANS Specify 240 or 110 v
3" Fan dim 80 x 80 x 38 **£8.50 (B)**
3.5" ETRI slimline 92 x 92 x 25 **£9.95 (B)**
4" Fan Dim 120 x 120 x 38 **£9.95 (B)**
As above - TESTED RFE **Only £4.95 (C)**
10" round x 3.5" Rotron 10v **£10.95 (B)**
DC FANS
Papst Miniature DC fans 62x62x25 mm
Order **812** 6-12v or **814** 24v **£15.95 (A)**
4" 12v DC 12w 120 x 120 x 38 **£12.50 (B)**
4" 24v DC 8w 120 x 120 x 25 **£14.50 (B)**
BUHLER 12v DC 62 mm **£12.95 (A)**

1000's of other fans and blowers in stock CALL or SAE for more details

SPECIAL INTEREST

Please call for availability or further info.
RACAL-REDAC real time, colour drafting **PCB** layout system **£3950**
DEC VAX11/750 inc 2 Mb Ram DZ, and full doc etc. **Brand New £8500**
HP7580A 8 pen digital A1 drum plotter with IEEE interface **As New £4750**
CHEETAH Telex machine **£995**
1.5 kw 115v 60 Hz power source **£950**
500 watt INVERTER 24v DC to 240v AC sine wave 50 Hz output **£275**
SOLDER SYSTEMS tin lead roller tinning machine for PCB manufacture **£350**
CALLAN DATA SYSTEMS multi user **INTEL** based **UNIX** system complete with software and 40 Mb winchester disk drive. **£2750**
WAYNE KERR RA200 Audio, real time frequency response analyzer **£3000**
TEKTRONIX 1411/R PAL TV test signal standard. **£6900**
TEKTRONIX R140 NTSC TV test signal standard. **£875**
HP 3271A Correlator system **£350**
PLESSEY portable Microwave speech / data link ,12v DC, 70 mile range.**The pair £275.00**
19" Rack cabinets 100's in stock from **£15.00**

DISPLAY -ELECTRONICS-

All prices for UK Mainland. UK Customers must ADD 15% VAT to total order value. Minimum order, cash £5, Credit Card £10. Official account orders from Government Depts, Universities, Schools & Local Authorities welcome – minimum account order value £25. Carriage charges (A) £1.50, (B) £3.50, (C) £6.50, (D) £8.50, (E) £10.00, (F) £15, (G) Call. All goods are supplied subject to our standard conditions of sale. All guarantees given on a return to base basis. We reserve the right to change prices & specifications without prior notice. Bulk trade & export enquiries most welcome.

MAIL ORDER & OFFICES
Open Mon-Fri 9.30-5.30
32 Biggin Way,
Upper Norwood,
London SE19 3XF

LONDON SHOP
1000's of Bargains for callers
Open Mon-Sat 9-5.30
215 Whitehorse Lane,
South Norwood, London SE25

DISTEL © The ORIGINAL
FREE of charge dial up data base
1000's of Items + info **ON LINE NOW!!**
300 baud 01 679 1888, 1200/75 01 679 6183. 1200 FDX 01 679 8769

ALL ENQUIRIES
01 679 4414
FAX 01 679 1927
TELEX 894502

VISA

DIGITAL ELECTRONICS

BY OWEN BISHOP

PART 3 – MULTIVIBRATORS

Monostable and astable circuits provide pulses; pulses are essential to logic circuits where any kind of timing control is needed – including most computers. It follows that we should know how they work.

A multivibrator is a circuit that produces pulses. There are two types:

- Monostable multivibrator – the circuit has *one* stable state; it produces a single pulse each time it is triggered.
- Astable multivibrator – the circuit has *no* stable state; it produces a continuous series of pulses at a fixed frequency.

The two types are generally refered to as 'monostables' and 'astables' for short.

There are several ways of building monostables, using:

- a pair of transistors,
- a pair of logic gates
- or a timer ic.

In this series we consider only the latter two designs, as these are more suitable for use with logic circuits.

A MONOSTABLE USING LOGIC

Fig. 1 shows a monostable built from two NAND gates. The third gate, on the right, is not part of the monostable, but serves as a *buffer*. It connects the monostable to another logic circuit. The buffer takes only a small current from the monostable, but provides all the current that the other circuit needs. This means that the operation of the monostable is not affected by loss of current to the other circuit.

You may notice that the monostable circuit is similar to the SR flip-flop described last month. It is similar because both circuits are based on *cross-connected gates*. The monostable has only *one* stable state, because one of the cross-connections is by way of a capacitor.

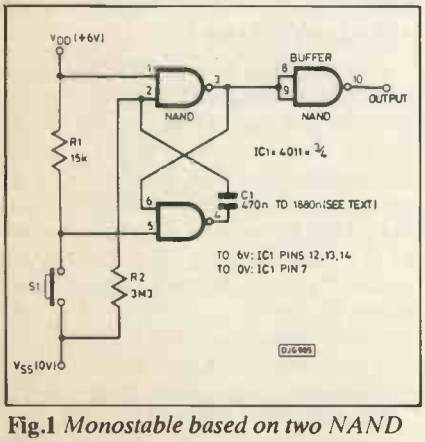

Fig.1 *Monostable based on two NAND gates.*

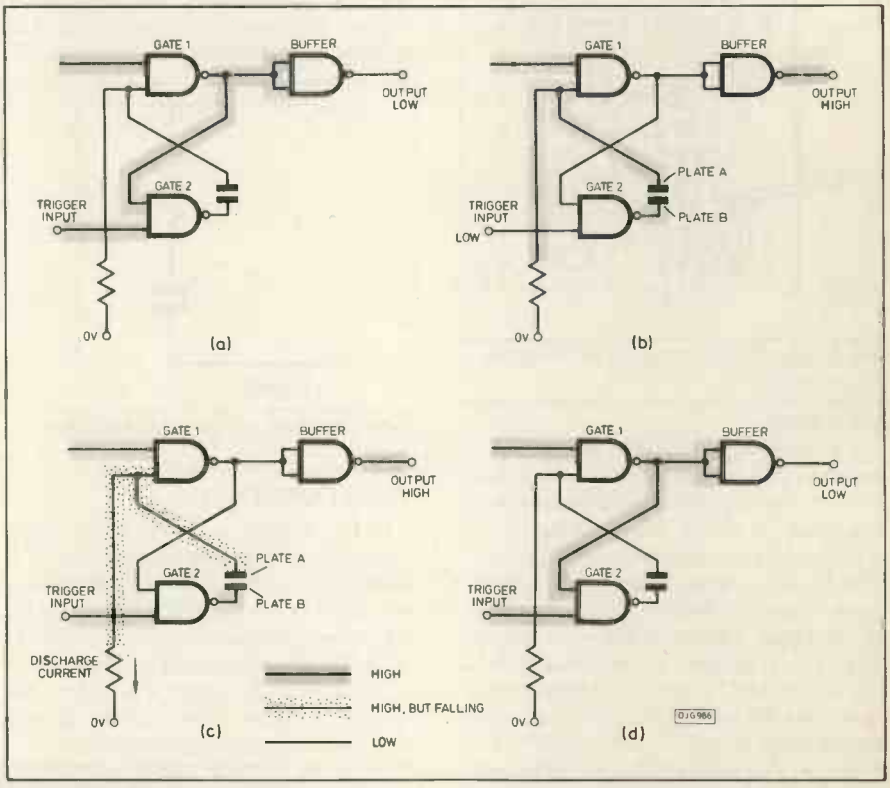

Fig.2 *How the Monostable works.*

Fig. 2 shows what happens when the monostable is triggered. At (a) the monostable is in its stable 'resting' state. The monostable is triggered by briefly pressing S1 (Fig. 1). This makes the input to gate 2 go 'low' for an instant. Fig. 2b shows that the low input causes the output of gate 2 to go high. The capacitor plate connected to gate 2 (plate A) is now at high potential. Plate B of the capacitor is also taken to high potential. This is because the *difference* in potential of the plates of a capacitor can not change immediately. If the potential on plate A goes up by, say, 2V, the potential on plate B also rises by 2V. The result is that both inputs to gate 1 are now high, its output is low, and the buffer output is high.

We can now let the trigger input go high again without affecting the monostable (c). The high potential on one side of R2 and the low potential (0V) on the other side of R2 causes a discharge current to flow to ground. The charge on plate B is gradually removed. The potential in that section of the circuit gradually falls. Obviously this is *not* a stable state as the high potential is falling steadily. Eventually the potential falls low enough to be counted as a 'low'. At this stage (Fig. 2d) the low potential at the input of gate 1 makes it change state. Its output becomes high. This causes gate 2 to change state. We are back to the stable state of Fig. 2a.

To sum up, the monostable is normally in its stable state and the buffer output is low. When triggered, it changes to its unstable state and the buffer output goes high. It stays like this while the capacitor is discharged through R1, and then

returns to its stable state. The length of time it is in its unstable state depends on how long the capacitor takes to discharge. This depends on the values of R2 and C1. To see what the effect is, try this investigation.

Investigation 1

Timing a monostable

In this investigation you find out what factors decide the length of the output pulse of a monostable. This monostable makes use of cmos logic.

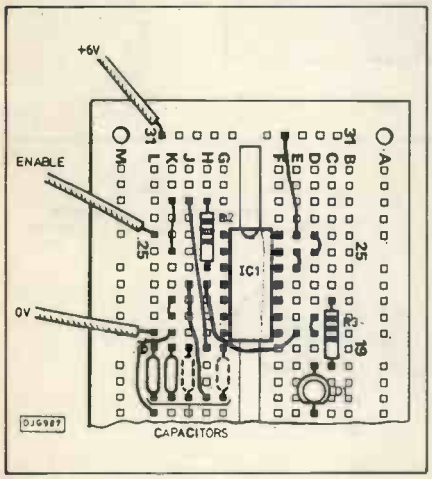

Fig.3 *Breadboard layout of monostable circuit in Fig.1.*

What to do

1. Connect a monostable circuit on a breadboard, as in Fig. 3. We have provided an area below the ic where you can plug in up to four capacitors in parallel. Begin with two capacitors, each 470nF as shown, giving a total capacitance of 940nF. R3 has a resistance of 180 ohms. Instead of the push-button S1 of Fig. 1, we have a flying lead, which can be touched to the 0V line as required. Note that the fourth gate of the ic has its inputs (pins 12 and 13) connected to 6V. This is so that we obey the rule stated last month, that cmos inputs must never be left unconnected. Instead of using D1 and R3 to indicate the output, you can use the logic probe described last month. Remember the other rules about handling cmos, given last month.
2. Switch on the power. The led should be out, indicating a low output.
3. Trigger the monostable by *briefly* touching the flying lead to 0V. Either plug it into a socket in the bottom row and take it out again *immediately,* or briefly touch it against a bare wire lead of one of the components that are plugged into the bottom row.
4. The led comes on while the monostable is in its unstable state, then goes out again. How long is the led alight? Use a watch to measure the output pulse length as precisely as you can, and write down the result. Do this five times and work out the average of your measurements.
5. Try the effect of altering the *capacitance* of C1. Remove one of the capacitors. Repeat step 4. The capacitance is half what it was before. What is the effect on the length of the pulse (the length of the unstable state)?
6. Replace the capacitor and plug two more into the vacant sockets. This gives a total capacitance of 1880nF, double that at step 3. Repeat step 4. What is the effect on the pulse length of doubling the original capacitance?
7. Now try the effect of altering the *resistance*. Have two capacitors plugged in, as at the start in Fig. 3. Change the resistance for a 1M5 resistor. Repeat step 4. The resistance is about half the original value. What is the effect on pulse length of halving the resistance?
8. Change the resistor for a 10M resistor. The resistance is about three times the original resistance. What is the effect on pulse length of trebling the resistance?

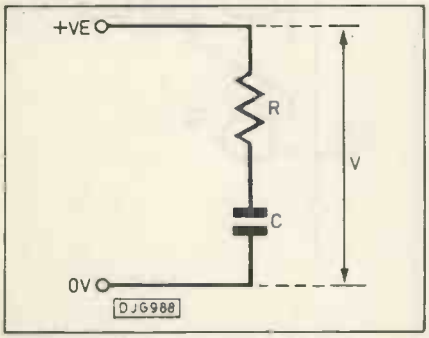

Fig.4 *Charging a capacitor through a resistor.*

TIME CONSTANT

In Fig. 4 there is a voltage V across a capacitor of C farads and resistor of R ohms. Current flows through the resistor and charges the capacitor. To start with, the capacitor is uncharged. The voltage across the capacitor is zero and the *whole* of the charging voltage V is across the resistor. Current flows rapidly through the resistor, charging the capacitor.

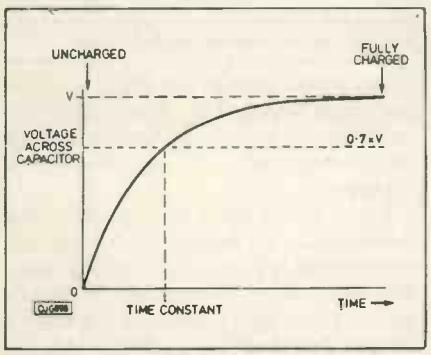

Fig.5 *Change of voltage across a capacitor as it is charged.*

Fig. 5 shows what happens as the capacitor becomes charged. The voltage across the capacitor gradually increases, which means that the voltage across the resistor must gradually decrease. The current therefore decreases gradually too and the rate of charging decreases.

In Fig. 5 the curve is steep to begin with, indicating rapid charging, but becomes less steep as time passes. Finally, when the capacitor has become fully charged, the voltage across it is V. This means that the voltage across the resistor has fallen to zero and no more current flows. Charging ceases and the curve in Fig. 5 levels out.

The rate at which the capacitor charges depends on the value of R and C. We express this in an equation:

$$t = RC$$

In this equation t is the *time constant* of the resistor-capacitor combination. The equation shows that the greater the resistance and/or capacitance, the greater the time constant. The greater the time constant, the longer the time taken to charge the capacitor to a given voltage. This is what was found in Investigation 1. The time taken to charge the capacitor to a level at which the monostable resets depends directly on the time constant of the circuit – the values of the resistance and capacitance involved.

The final question is 'What time do we mean by t?' (No – not tea-time!) Without going into the mathematics, t is the time taken to charge the capacitor to 0.7 of the charging voltage, V. In Fig. 5 it is the time taken for the voltage across the capacitor to reach the dashed line at $0.7 \times V$. In the cmos monostable working on a 6V supply, it is the time taken to charge the capacitor to $0.7 \times 6V = 4.2V$. Since the gates change state when the capacitor is charged to 3V, the unstable period lasts rather less than t. With R=3M3 and C=940nF, for example, $t = 3.3 \times 10^6 \times 940 \times 10^9 = 3.102s$. Did you get a pulse length a little less than 3 seconds?

SIMPLE PULSE GENERATORS

Fig. 6 shows four pulse generators each based on two ttl gates. The graphs illustrate their action. In each case, a pulse is generated following a change in input level – either high-going or low-going. These circuits are useful building-blocks for any logical circuit in which timing is required. We leave it to the reader to find out how they work, either by using truth tables or by practical investigation. The working of the first one is explained on P.41.

555 MONOSTABLE

In this section we introduce what must be one of the most useful ics ever devised (Fig. 7). Although it is essentially a timer ic, it is so easy to use and has so many applications that one wonders how we ever managed to get by in those days before the 555 arrived. Fig. 8 shows how to use it as the basis of a monostable circuit. Its action depends upon the time taken to charge a capacitor, C1. The current for charging C1 flows through R1 and, as we might expect, the time taken is proportional to the values of R1 and C1.

Treating the 555 as a black box, without going into any details of its *internal* circuitry, the action of the ic is as

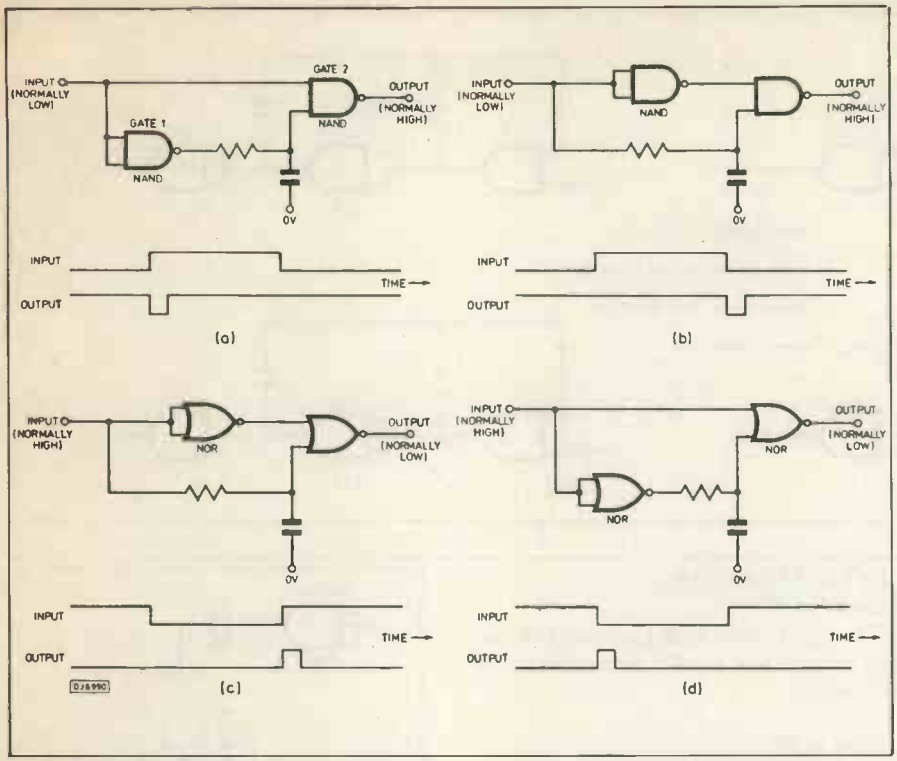

Fig.6 *Pulse generation.*

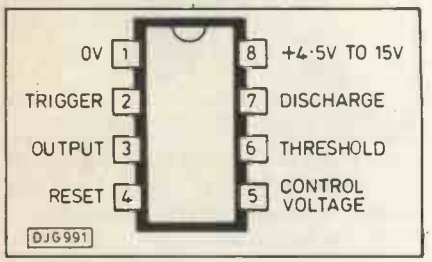

Fig.7 *The 555 timer ic.*

follows. Its output is normally low (0V). When it is triggered, by a low pulse to the trigger input, the output rises to high (+V). At this instant, the capacitor begins to charge. When charging is complete, the output falls to 0V again.

We must look a little more closely at the charging process.

Normally, the capacitor is held charged to a level that is precisely V/3 (one third of the supply voltage). Current flows continuously through R1 but, instead of flowing on and increasing the charge on C1, it is diverted into the ic through pin 7, and conducted away through pin 1 to the 0V rail. When the ic is triggered, the current is no longer diverted. Instead of flowing into pin 7, it flows on toward the capacitor. The capacitor charges and the voltage across it gradually rises. The output at pin 3 is high while this is happening. The rising voltage across the capacitor is sensed by a circuit connected internally to pin 6. After a period of time (depending on the values of R1 and C1) the voltage across the capacitor reaches 2V/3 (two-thirds of the supply voltage). Pin 6 senses when this voltage has been reached and, as soon as this happens, the output (pin 3) falls sharply to 0V. At the same time, pin 7 once more allows current to pass into the ic. The capacitor is discharged very rapidly, until pin 6 senses that the voltage has fallen to V/3 again.

The length of time (in seconds) for which the output is high is the time constant multiplied by 1.1:

$$\text{Pulse length} = 1.1RC$$

An advantage of the 555 is that, given high values of R1 and C1, a very long pulse length can be obtained. For example, with a resistance of 1M and capacitance of 1000μF, the period is 1100 seconds, or just over 18 minutes. Longer periods are possible, but there is a upper limit because the current flowing to the capacitor is very small. For high capacitance it is generally necessary to use electrolytic capacitors and these have a high leakage current. The charging current leaks away through the capacitor, which fails to charge.

Another advantage of the 555 is that the times are independent of the level of the supply voltage. For example, if the supply voltage is 6V, the capacitor is charged from 2V (=V/3) to 4V (=2V/3). The voltage increases by 2V. If the supply voltage is 12V, the capacitor is charged from 4V to 8V, a rise of 4V. The rise in voltage with 12V supply is twice as great, currents are twice as great, the capacitor charges twice as quickly and the *time is the same.*

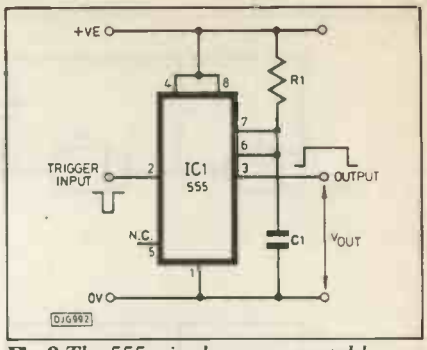

Fig.8 *The 555 wired as a monostable N.C.; no connection is made in this circuit.*

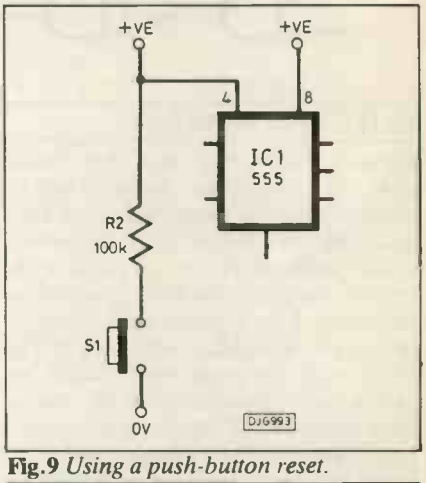

Fig.9 *Using a push-button reset.*

As already mentioned, timing is triggered by a low-going pulse to the input pin. Triggering is very sensitive; if the pin is unconnected the ic can be triggered by touching a finger against the input pin. This feature makes the ic useful in touch-switches. If the ic is triggered again while the output is high, there is no effect on the timing period. The reset pin is similarly very sensitive. In the circuit of Fig. 8 it is shown connected to the supply line, so that the ic can not be reset. If it is connected as in Fig. 9, closing S1 while output is high grounds the reset input and the output immediately goes low. At the same instant the capacitor is discharged rapidly to V/3, ready for the next triggering.

ASTABLE USING LOGIC

An astable circuit has *no* stable states. It alternates (or oscillates) between two

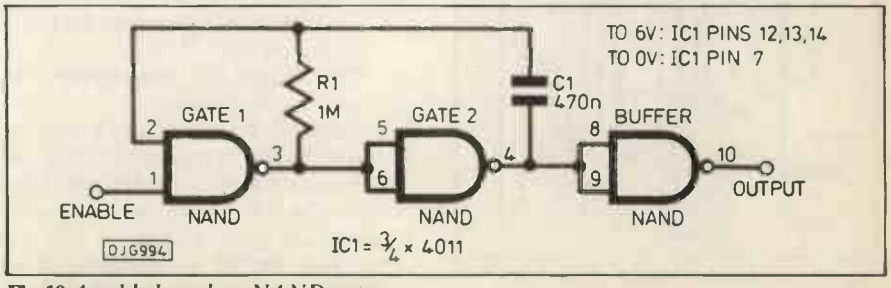

Fig.10 *Astable based on NAND gates.*

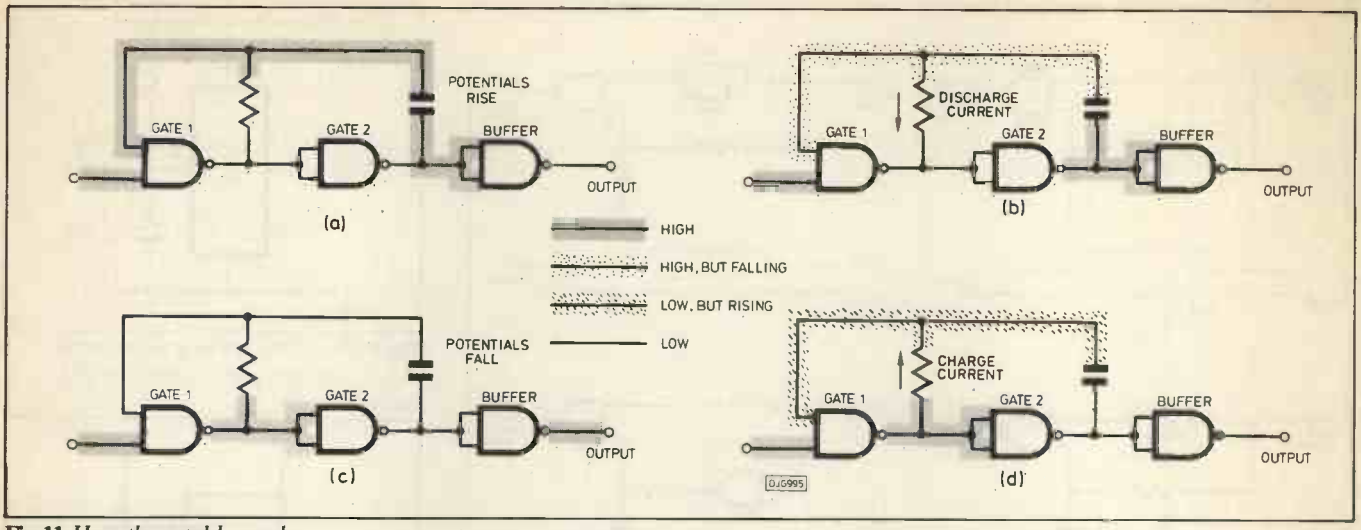

Fig.11 *How the astable works.*

opposite states, but does not remain stable in either state. Astables can be made using cross-connected gates, each linked to the other through capacitors. Using cmos logic, it is possible to simplify the circuit by omitting one of the capacitors. Fig. 10 shows a cmos astable, the action of which is explained in Fig. 11. As with the monostable circuit, we have a buffer gate to isolate the astable from the circuit to which it is connected. In this version of the astable, one of the inputs to gate 1 is used as an ENABLE input. If this is held high, the astable operates as described below. If the ENABLE is low, the circuit remains stable, with the buffer output high.

In Fig. 11a the astable has just changed state. The output of gate 1 has gone low and that of gate 2 has gone high. This raises the potential of *both* plates of the capacitor. The capacitor then loses charge through R1 (b), gradually raising the potential at the inputs of gate 2. Since this is a cmos gate, no current flows into the gate itself. When the input level has risen to 3V the astable changes state again (c). Both plates of the capacitor are at 0V and current flows through the resistor in the reverse direction to charge the capacitor (d). When the level on the capacitor plate and at the input of gate 1 has risen to 3V the astable changes state again, and we are back at diagram (a).

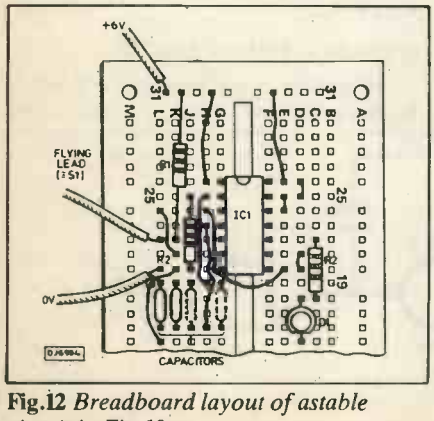

Fig.12 *Breadboard layout of astable circuit in Fig.10.*

INVESTIGATION 2

Astable action

In Fig. 12 the fourth (unused) gate has its inputs (pins 12, 13) connected to the 6V supply.

What to do

1. Set up the circuit as in Fig. 12, with the ENABLE input wire plugged into the 0V rail. There are two 470n capacitors connected in parallel, giving a total capacitance of 940n. There is room for two more such capacitors to be added in parallel, as shown. The state of the circuit is shown by the led, or you can use the logic probe described last month.

2. Connect the power supply. The led comes on and stays on, since ENABLE is at 0V.

3. Plug the ENABLE wire into the +6V rail. The led begins to flash. Count how many times the led flashes on during one minute. Divide this number by 60 to obtain the frequency in hertz.

4. Replace R1 by a 2M2 resistor. Count the number of flashes per minute. Divide by 60 to calculate the frequency.

5. Replace R1 by a 470k resistor. Measure the frequency.

6. Replace the original 1M resistor. Plug in two more 470n capacitors in parallel with the two that are already there. This gives a total capacitance of 1880n. Measure the frequency.

7. Remove three of the capacitors, leaving a single 470n capacitor. Measure the frequency.

8. Summarise the results of your investigation by filling in the blanks in these sentences:

The higher the resistance, the ..... the frequency.

The higher the capacitance, the ..... the frequency.

9. Replace R1 with a 1k resistor. Remove the led (or logic probe) from the circuit and connect a crystal earphone instead (Fig. 13). Switch on, *then* put the earphone to your ear. What can you hear? The astable is oscillating at an *audio* frequency, which can be heard as a note. Try other values of resistors and capacitors, to find how the frequency of the sound is affected. Write sentences similar to those at step 8 to summarise what you have found.

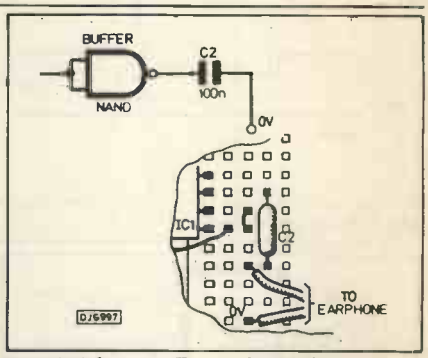

Fig.13 *Adapting Fig.12 for audio output.*

USING ASTABLES

There are two main uses for astables:

* clocks
* tone generators

Clocks generate pulses that are used to drive logic circuits. The clock acts like the conductor of an orchestra, beating out the time. The various parts of the circuit are like the members of the orchestra, each performing their own job at the correct time in relation to the clock and, therefore, to each other. In short, the clock *coordinates the operation* of the parts of the circuit, as well as *setting* the rate at which the system does its job.

An example to illustrate the use of a clock is a circuit to operate traffic lights (Fig. 14). The clock might run at 0.1Hz. The clock drives a counter, which counts the pulses from the clock. The counter continuously counts from 0 to 15, then resets to 0 again. Sub-circuits connected to the counter detect when the counter reaches different counts. These count-detecting sub-circuits switch on the coloured lamps. The count-detector which controls the red lamp switches on at count 0 and off at count 4. The lamp is on for four counts. At 0.1Hz (10 seconds per count), the lamp is on for 40 seconds. The other count-detectors act as shown in the figure to produce the familiar

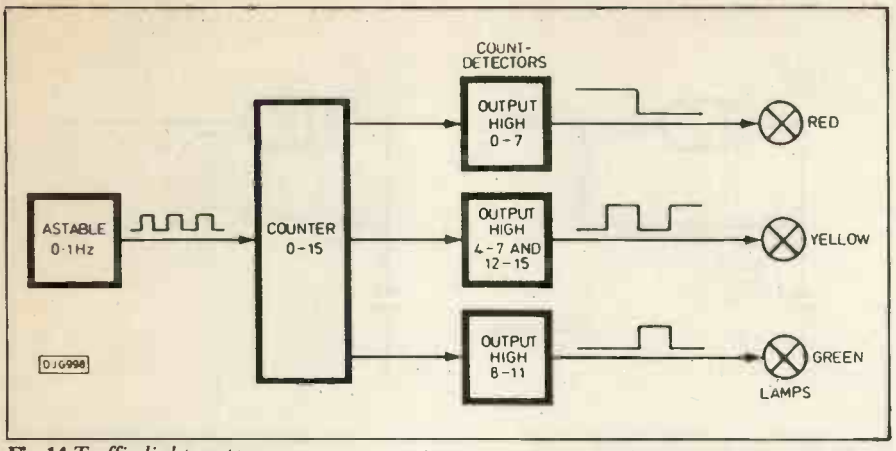

Fig.14 *Traffic light system.*

traffic-light sequence. By adjusting the frequency of the clock, we can make the lights go through their sequence faster or slower. By altering the times (=counts) at which the lamps are switched on and off, we can alter the timings of the individual stages of the operation. For example, if the lamps are where a minor road crosses a busy main road, we can arrange that the green lights on the main road are on for longer. Fig. 14 is a *system diagram*. It does not show how we wire up the counter, or the logic used for the count-detectors. Next month we look at this circuit in more detail.

A microcomputer is another example of a system that uses a clock. The clock is usually connected directly to the microprocessor, and possibly to other sections of the circuit – to synchronise the actions of all sections. The logic circuits inside the microprocessor are coordinated by the stream of pulses from the clock in a way similar to that described for the traffic light system. They perform their operations in a definite order: put an address on the address bus, read the data from memory after it has been put on the data bus, send this to the instruction register, carry out the instruction (several timed stages required for this), and so on. Many different operations have to be performed at high speed, in the correct order and at the right times (measured in microseconds!). Consequently, one difference between a microcomputer and a traffic lights system is that the clock of a microcomputer operates at very high speed, usually 1MHz or more.

TIMING PRECISION

You may have noticed that investigations with monostables and astables do not always give *precisely* the timings we would expect by calculating time constants. This is because resistances are usually precise only to 5% and capacitances only to about 10% (electrolytic capacitors may be precise only to 20%). The frequency of a resistor-capacitor astable is as precise as the *least* precise of its component – usually its capacitor. This is useless for many purposes – such as driving a digital clock. One way around the problem is to have a variable resistor in series with the fixed resistor so that the circuit can be 'tuned' to the required frequency. Even then, changes in temperature alter resistance and capacitance, and capacitance may change as the capacitor ages. Thus the frequency of the astable may alter after it has been tuned.

These changes are relatively small and do not matter for traffic-light controls and similar low-precision circuits. But for microcomputers (except perhaps the cheapest) and for other high-precision circuits (such as digital watches, the frequency-generation circuits of radio transmitters and receivers) it is essential to have much greater precision.

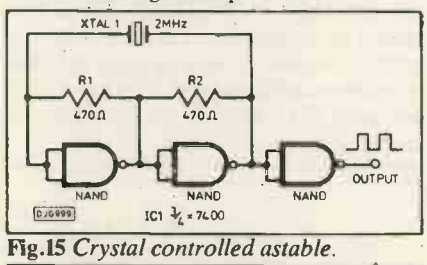

Fig.15 *Crystal controlled astable.*

One solution is an astable circuit such as that in Fig. 15. This relies on the frequency with which a specially-cut quartz crystal vibrates. Crystals can be cut and ground with a very high degree of precision at a relatively low cost. For example, for less than £1 you can buy a crystal cut to oscillate at precisely 32.768kHz. This particular frequency when divided by 2^{15}, gives a frequency of 1Hz, suitable for driving a digital watch or clock. When a voltage is applied to the crystal, it oscillates. When it oscillates an alternating voltage appears across it. The idea of the circuit is for the astable to supply an alternating voltage that is alternating at a frequency close to that of the crystal. The crystal vibrates, producing an alternating voltage *at its own precise frequency*. This *forces* the astable to vibrate at the same frequency.

We have said a lot about astables as clocks, but there is less to say about astables as tone generators. Perhaps the 'pips' we hear before a news bulletin are the simplest example of tone generation by an astable. Tone generation has obvious applications in synthesisers, electronic organs and similar musical instruments, as well as musical door-chimes and key-ring bleepers.

MARK AND SPACE

These terms have their origin in the signals sent by the earliest kinds of digital communications equipment, the teletype machines. When a signal consists of a series of pulses, the *mark* is the pulse itself, represented by a high level on the line. The interval between one pulse and the next is the *space*, represented by a low level (in some systems a negative voltage) on the line. The ratio between the length of a mark and the length of a space is the *mark/space ratio*. If mark and space are equal in length, the mark/space ratio is 1. There is more about this in the next section.

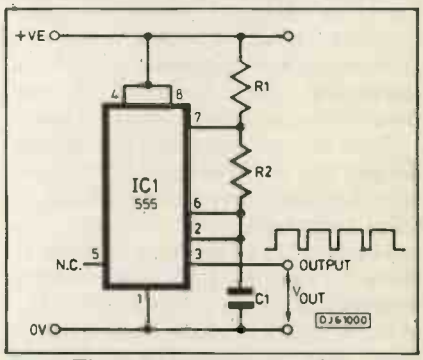

Fig.16 *The 555 wired as an astable.*

555 ASTABLE

The 555 timer ic can also be connected as an astable (Fig. 16). The differences in the wiring are that there is a resistor between pins 6 and 7, and that pin 2 (trigger) is connected to pin 6. The sequence of operations is similar to that of the monostable circuit (see above). The capacitor charges through R1 and R2, in series. Consequently, charging time (the length of the 'high' output period) depends on the total value of R1 and R2. When charging is complete, the output falls to 0V and discharging begins. Current flows from the capacitor, through R2 to pin 7. The discharging time (the length of the 'low' period') therefore depends on the value of R2, but not R1. When the capacitor is discharged and the voltage at pin 6 has fallen to V/3, this low voltage triggers the input at pin 2 and charging begins again. The circuit oscillates indefinitely.

The equations for charging and discharging are:

Charge time (output high) $t_1 = 0.693(R_1 + R_2)\,C$

Discharge time (output low) $t_2 = 0.693\,(R_2)\,C$.

Combining these to obtain the total period for charging and discharging we obtain:

$$t = 0.639\,(R_1 + 2.R_2)$$

So the frequency of the astable is given by:

$$f = \frac{1.44}{(R_1 + 2.R_2)\,C}$$

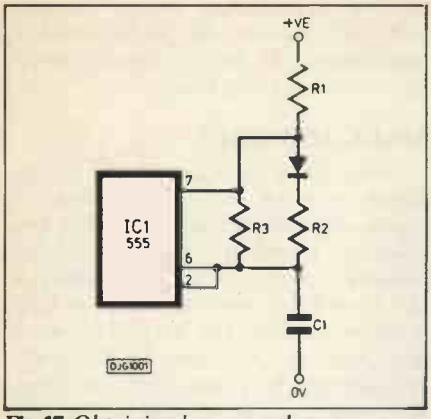

Fig.17 *Obtaining lower mark-space ratios.*

By suitable choice of resistors and capacitors the frequency of the astable can be set over a very wide range, from less than 1Hz to several hundred kilohertz. The 555 is equally useful as a clock or as a tone generator. As with the monostable, the frequency is not affected by variations in supply voltage.

Since the capacitor charges through R1 and R2, but discharges through R2 only, charging (high output) takes longer than discharging (low output). This makes it easy to set the mark/space ratio. However, since $R_1 + R_2$ is unavoidably greater than R_2 alone, the circuit of Fig. 16 must always produce a mark that is longer than the space. The mark-space ratio is always greater than 1. Using a diode in the circuit, as in Fig. 17, prevents discharge through R2. Instead, discharging occurs through R3, which has a higher resistance than R2. Discharging is prolonged and mark/space ratios of 1 or less may be obtained.

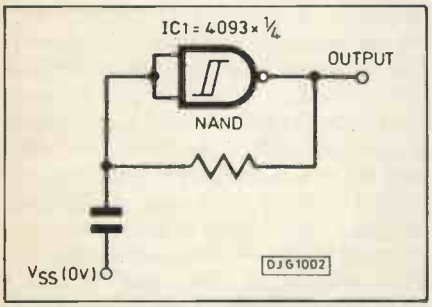

Fig.18 *Astable using a Schmitt trigger gate.*

SCHMITT TRIGGER ASTABLE

Fig. 18 shows a very simple but extremely useful astable based on the cmos 4093 Schmitt trigger ic. Its cost is low and it takes up little room on the circuit board. Fig. 19 shows how it works. At stage (a) the capacitor is discharged, inputs to the gate are low and its output is therefore high. Current flows through R1, gradually charging the capacitor. When the voltage across the capacitor reaches the upper threshold (see last month's article), the inputs to the gate are effectively high and the output suddenly goes low (b). Now the capacitor is discharged through the resistor. The voltage falls until it reaches the lower threshold. At this point the inputs to the gate are effectively low (a). The cycle is repeated indefinitely.

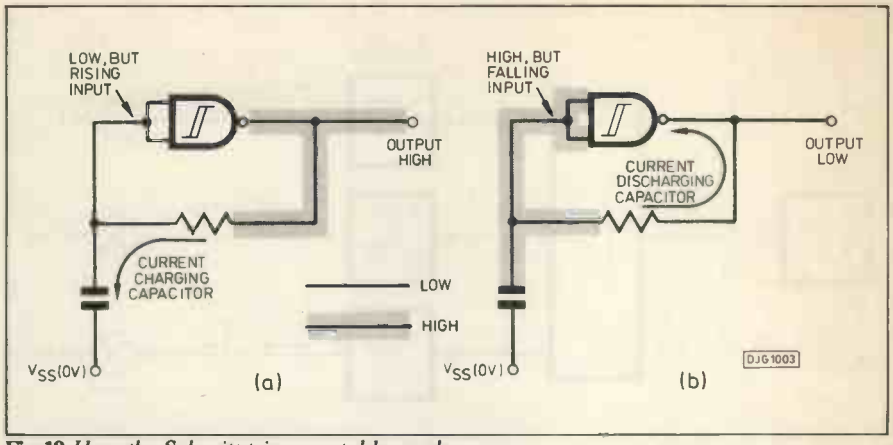

Fig.19 *How the Schmitt trigger astable works.*

QUESTIONS

1. Fig. 20 shows the circuit of a Schmitt trigger astable that has a mark-space ratio of 1/23. Explain how it works.
2. A monostable is to be built from a 555 ic to generate pulses approximately five seconds long. If the capacitor to be used has a capacitance of 1000μF, what value of resistor is required, to the nearest ohm? What is the nearest standard value of resistor obtainable? What period, in seconds, is obtained if this resistor is used?
3. The frequency of middle C on the musical scale is 256Hz. Calculate the values of capacitor to be used in a 555 astable circuit to give a note of this frequency, assuming that two resistors are each 56k. What is the mark/space ratio?

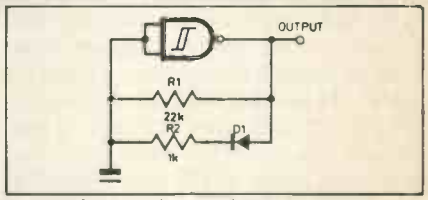

Fig.20 *Setting the mark-space ratio.*

MODULE OF THE MONTH

5. Programmable multivibrator

This module (Fig. 21), based on the 555 timer ic, is switched to operate either as a monostable or as an astable. Resistors and a capacitor of suitable value are inserted in the terminal sockets to set the timing. In monostable mode the circuit is triggered by a low input to the trigger socket. The reset button is used in monostable mode to return output to 0V. The module operates on any supply voltage in the range 4.5V to

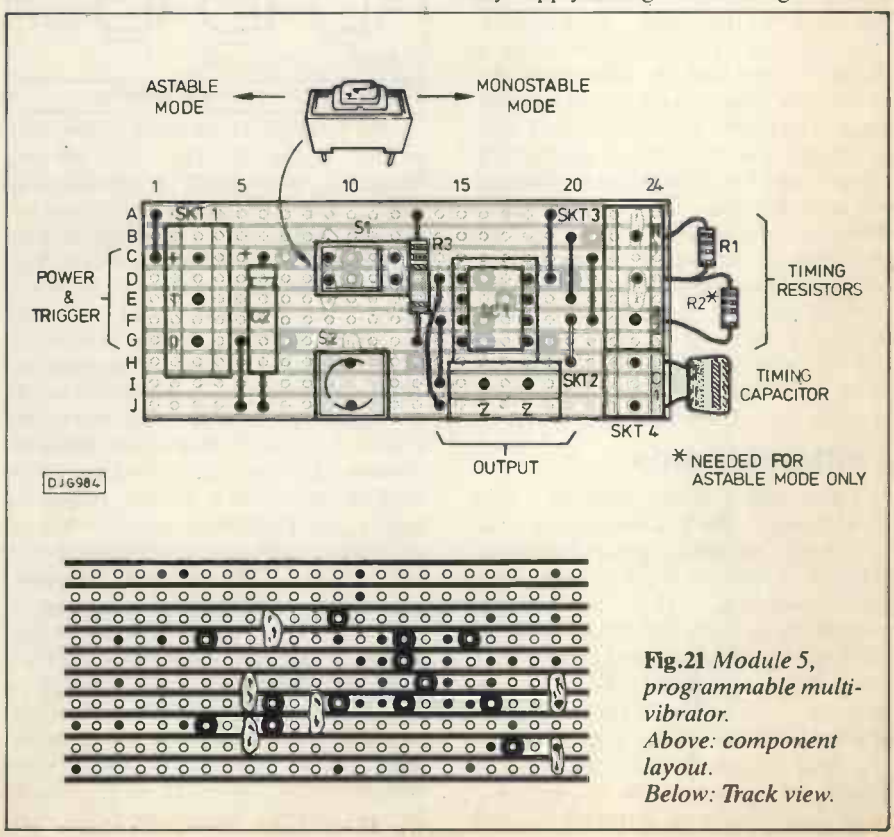

Fig.21 *Module 5, programmable multivibrator. Above: component layout. Below: Track view.*

16V. It requires 3mA when operated at 5V, or 10mA when operated at 15V.

Parts required

R1, R2 and C1, as required for timing
R3 100k, 0.25W
C2 22μ, 16V electrolytic
IC1 555 timer ic
8-pin dil socket
SKT1 pc terminal 3-way
SKT2 pc terminal 2-way
SKT3 pc terminal 3-way
SKT4 pc terminal 2-way
S1 dil switch single-pole double throw
S2 Push-to-make push-button, pcb type (pin spacing 5mm)
Stripboard Vero 14345

SYSTEM OF THE MONTH

Now that we have several modules to hand, we can start putting them together to build electronic systems. Fig. 22 shows a timer system that turns on a led for a specified period when the button is pressed. You don't *really* need a debounced key for this – a touch-plate wired to the trigger input of module 5 should do. Try designing and building your own system from the five modules now published.

Answers to questions

Don't look until you need to!

Pulse generator

Fig. 23(a) shows the normal state. At (b) the generator is triggered by a high-going input. Output goes briefly low until (c) when the capacitor has been discharged. Later when input goes low again, the capacitor becomes re-charged, but this does not affect the output. This is because low-low and low-high both give a high output from a NAND gate. The way the other pulse generators work follows a similar sequence.

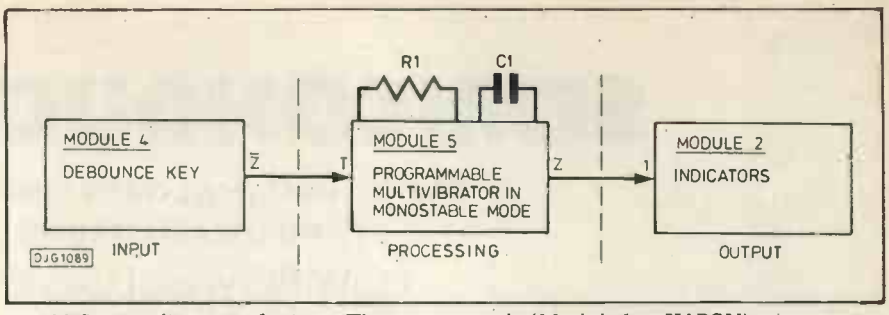

Fig. 22 *System diagram of a timer. The power supply (Module 1 or 5V PSU) goes to all three modules, but is not shown here.*

Questions on p.40

1. During charging (output high = mark) current flows through both R1 and R2. In parallel, these have a combined resistance of 957 ohms. During discharge (output low = space) current flows through R1 only, since the way through R2 is blocked by the reverse-biased diode, D1. The resistance of R1 is 22000 ohms, so discharging takes about 23 times (22000/957) as long as charging. The mark-space ratio is 1:23.

2. $R = t/(1.1 \times C) = 5/(1.1 \times 100 \times 10^{-6}) = 5/(1.1 \times 10^{-4}) = 45455$ ohms. Nearest standard (E12) is 47k. Frequency is $f = 1.1 \times 47 \times 10^{3} \times 100 \times 10^{-6} = 5.17$s.

3.
$$C = \frac{1.44}{(R_1 + 2.R_2)f}$$

$$C = \frac{1.44}{168000 \times 256}$$

$$C = 33.5 \times 10^{-9}\text{F} = 33.5\text{nF}$$

Charging is through 112k, while discharging is through 56k. The mark-space ratio is 2:1.

Next month, in Part Four we examine digital circuits, their design problems, sequencing logic, counters and number systems.

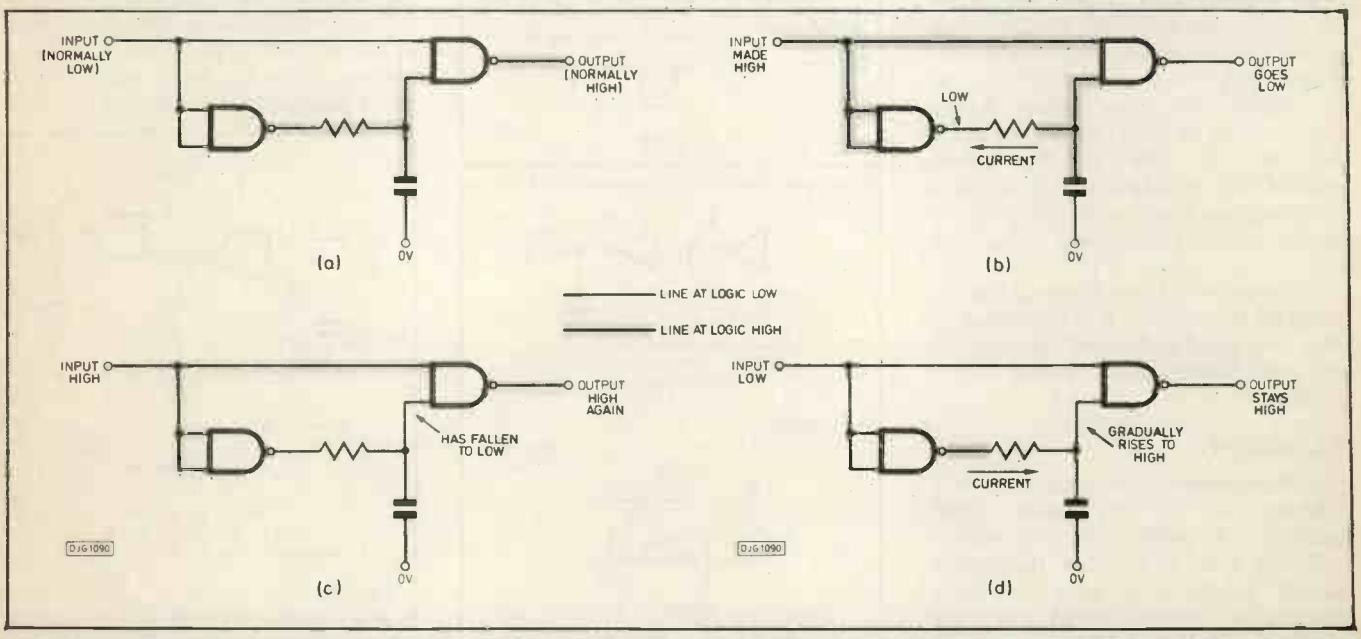

STRIKING LOGIC

During the summer I spent a couple of weeks brushing up on my micros, omegas and the rest of the Greek alphabet. Simultaneously, while on the fascinating Aegean island of Thassos, I carried out healthy research into solar power and wave power. My wife thought I was just sunbathing and swimming.

Nonetheless, Greece does go in for alternative forms of energy harnessing, as is evident from the widespread use of roof-mounted solar panels for heating water in both domestic and business premises. So far, though, on none of my "research" trips to Greece have I seen evidence of electric power being generated by solar cells.

However, all their energy costs could surely be fractionalised if the dramatic power of the thunderstorms we witnessed could be harnessed. For five nights running, the sky was repeatedly ripped through to daylight conditions as strike after strike was flung by Zeus from one horizon to the other. Tourist mortals could only stand in awe at such mythological extravagance – except for a certain Ed who was wondering how many nicad PP3s could be recharged by each bolt.

My meteorological books don't give the answer directly, but it appears from various sources that storms have been known to consist of 7000 lightning strikes, and that the probable maximum figures for individual lightning discharges are 250,000 amps, 100 million volts, 400 coulombs, 25 billion watts, 32 million horsepower, 4 billion joules.

That's nearly as powerful as Ouzo! **Ed.**

SEMICONDUCTORS

PART 11: PRACTICAL CMOS DESIGNS

BY ANDREW ARMSTRONG

LOW POWER LOGIC

The characteristics of cmos logic make it ideal for many home construction projects. To get the best from cmos it is necessary to consider its electrical characteristics as well as its logic functions.

CMOS logic, and in particular 4000 series cmos, is a good type of logic for a wide range of applications. Historically ttl has been more widely used, partly because engineers were already familiar with it, and partly because it works at higher speed than 4000 series cmos. With the advent of the faster cmos families, this is less true. The 74HCT family is interchangeable with 74 series ttl in almost all situations. Only the specialised ttl families show any performance advantages over cmos, though 74LS ttl is still cheaper than the cmos alternative.

The 4000 series is a low cost cmos logic family which can do some things that other low cost logic families cannot. Its high input impedance and very low static power consumption make it ideal for battery powered low speed circuitry, or in applications where power supply consumption or heat dissipation are a problem. So low is the power consumption of 4000 series cmos that if an ic becomes warm to the touch there is almost certainly something wrong with it.

Table 8 shows the family characteristics for 4000 series cmos. It is interesting to note that speed and output drive current are both dependant on power supply voltage.

CLOCKING

Combinational logic circuits are very tolerant of different input signal qualities. A cmos gate will accept voltages well away from the power supply rail levels as logic 1 or 0 as appropriate, and little harm is done if the signal is slow in switching between the two levels. This is not so in the case of clocked circuits. For example, a normal cmos counter operating on a 12V supply cannot be successfully clocked by the output of a 741 running on the same supply, though a combinational circuit will cheerfully accept the output as one logic level or the other. The counter may count between some states and others, but may fail to count when, perhaps, the most significant bit should have switched.

There are several answers to this problem. One is to use a faster opamp or comparator to drive the counter. Many bifet opamps have fast enough slew rates to clock cmos counters, so this idea works well. Another possible solution is to use a Schmitt trigger gate to improve the waveform, and this is also an effective solution.

The third possible answer is to use cmos counters with Schmitt trigger inputs. These will accept very grotty signals and still work well. An example of this type of counter is the 4000.

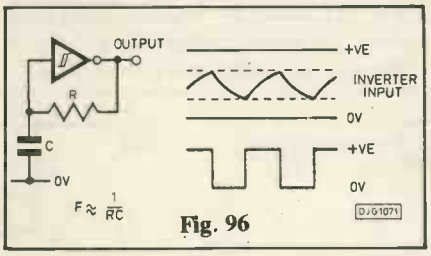

Fig. 96

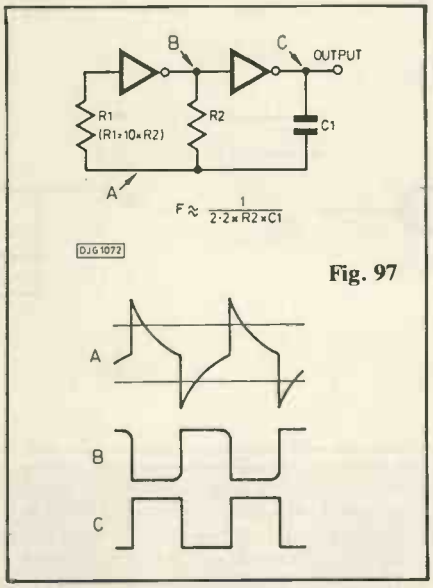

Fig. 97

APPLICATION CIRCUITS

One of the most common requirements in logic circuitry is to provide a clock signal. The circuit of Fig. 96 shows a simple design of clock oscillator, using a Schmitt inverter such as the 40106B. A Schmitt NAND gate such as the 4093 could be wired as an inverter to perform this function, in which case the second input could be used to gate the oscillator off. This simple design of oscillator suffers from the problem that its frequency depends substantially on the precise voltage of the Schmitt levels. This is a parameter which can vary from chip to chip, so the reproducibility of a design is not very good.

The design shown in Fig. 97 is more reproducible because the capacitor charges and discharges over a wider voltage range, while the uncertainty of switching point (controlled by the voltage gain of the gates) is small. The uncertainty is thus a small percentage of the total voltage swing, so the frequency of the oscillator is well defined. A gated version of this oscillator, using 2 input NOR gates, is shown in Fig. 98.

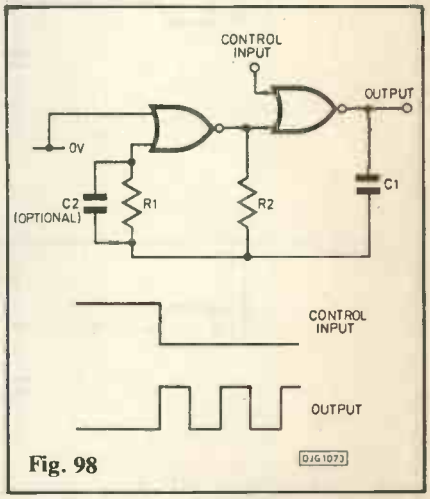

Fig. 98

An improved version of this oscillator is shown in Fig. 99. This circuit uses an extra inverter to provide a clean squarewave to drive the timing resistor, R2. The disadvantage associated with this is that there is one more propagation delay, which limits the maximum frequency.

In all the oscillator designs, except that of Fig. 99, the voltage on the capacitor swings outside the power supply rails. It is only able to do this because R1 prevents the input

D.C. CHARACTERISTICS V_{SS}=0V; for all devices unless otherwise specified

Parameter	V_{DD} V	Symbol	T_{amb} (°C) −40 min.	−40 max.	+25 min.	+25 max.	+85 min.	+85 max.	Unit	Conditions
Quiescent device current										
	5		–	1,0	–	1,0	–	7,5	μA	
Gates	10	I_{DD}	–	2,0	–	2,0	–	15,0	μA	
	15		–	4,0	–	4,0	–	30,0	μA	
	5		–	4,0	–	4,0	–	30	μA	
Buffers, flip-flops	10	I_{DD}	–	8,0	–	8,0	–	60	μA	
	15		–	16,0	–	16,0	–	120	μA	all valid input combinations;
	5		–	20	–	20	–	150	μA	$V_I=V_{SS}$ or V_{DD}
MSI	10	I_{DD}	–	40	–	40	–	300	μA	
	10		–	80	–	80	–	600	μA	
	5		–	50	–	50	–	375	μA	
LSI	10	I_{DD}	–	100	–	100	–	750	μA	
	15		–	200	–	200	–	1500	μA	
	5		–	0,05	–	0,05	–	0,05	V	
Output voltage LOW	10	V_{OL}	–	0,05	–	0,05	–	0,05	V	$V_I=V_{SS}$ or V_{DD}; I_O <1 μA
	5		4,95	–	4,95	–	4,95	–	V	
Output voltage HIGH	10	V_{OH}	9,95	–	9,95	–	9,95	–	V	$V_I=V_{SS}$ or V_{DD}; I_O <1 μA
	15		14,95	–	14,95	–	14,95	–	V	
	15		–	1,5	–	1,5	–	1,5	V	V_O=0,5V or 4,5V
Input voltage LOW	15	V_{IL}	–	3,0	–	3,0	–	3,0	V	V_O=1,0V or 9,0V I_O <1 μA
(buffered stages only)	15		–	4,0	–	4,0	–	4,0	V	V_O=1,5V or 13,5V
	5		3,5	–	3,5	–	3,5	–	V	V_O=0,5V or 4,5V
Input voltage HIGH	10	V_{IH}	7,0	–	7,0	–	7,0	–	V	V_O=1,0V or 9,0V I_O <1 μA
(buffered stages only)	15		11,0	–	11,0	–	11,0	–	V	V_O=1,5V or 13,5V
Input voltage LOW	5		–	1	–	1	–	1	V	V_O =0,5V or 4,5V
unbuffered stages	10	V_{IL}	–	2	–	2	–	2	V	V_O=1,0V or 9,0V I_O <1 μA
only)	15		–	2,5	–	2,5	–	2,5	V	V_O=1,5V or 13,5V
Input voltage HIGH	5		4	–	4	–	4	–	V	V_O=0,5V or 4,5V
(unbuffered stages	10		8	–	8	–	8	–	V	V_O=1,0V or 9,0V I_O <1 μA
only)	15		12,5	–	12,5	–	12,5	–	V	V_O=1,5V or 13,5V
Output (sink)	5		0,52	–	0,44	–	0,36	–	mA	V_O=0,4V; V_I=0 or 5V
current LOW	10	I_{OL}	1,3	–	1,1	–	0,9	–	mA	V_O=0,5V; V_I=0 or 10V
	15		3,6	–	3,0	–	2,4	–	mA	V_O=1,5V; V_I=0 or 15V
Output (source)	5		0,52	–	0,44	–	0,36	–	mA	V_O=4,6V; V_I=0 or 5V
current HIGH	10	$-I_{OH}$	1,3	–	1,1	–	0,9	–	mA	V_O=9,5V; V_I=0 or 10V
	15		3,6	–	3,0	–	2,4	–	mA	V_O=13,5V; V_I=0 or 15V
Output (source) current HIGH	5	I_{OL}	1,7	–	1,4	–	1,1	–	mA	V_O=2,5V; V_I=0 or 5V
Input leakage current	15	$\pm I_{IN}$	–	0,3	–	0,3	–	1,0	μA	V_O=0 or 15V
3-state output leakage; current	15	I_{OZH}	–	1,6	–	1,6	–	12,0	μA	output returned to V_{DD}
3-state output leakage current; LOW	15	$-I_{OZL}$	–	1,6	–	1,6	–	12,0	μA	output returned to V_{SS}

Table 8. *4000 series cmos data.*

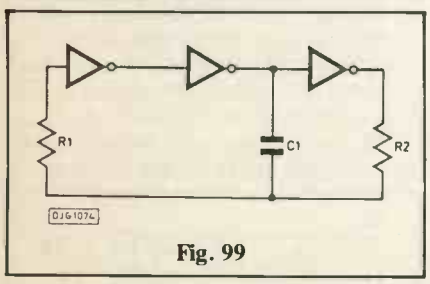

Fig. 99

protection diodes of the cmos chip from clamping the voltage to one diode drop either side of the power supply rails. The design may work without R1, but the reproducibility is poor.

Not that in Fig. 98 the unused input of the first NOR gate is connected to 0V, to allow the other part of the gate to work as an inverter. The circuit would also work if the two inputs were connected together, but the switching would be less symmetrical due to interaction between the input mosfets.

Note also in Fig. 98 the optional extra capacitor, C2. This is helpful if R1 has a high value, say greater than 220k. It is to prevent high frequent noise pickup on the gate input, which may cause oscillation on edges.

Sometimes there are no spare inverting gates in a design, but there are spare analogue switches because, perhaps, only one quarter of a 4016 has been used to make a sample and hold gate. In this case it can be useful to make an oscillator using analogue switch parts. Fig. 100 and Fig. 101 show two such circuits. The design in Fig. 100 has good current sink capability but poor current source, and the design in Fig. 101 has good source and poor sink capability.

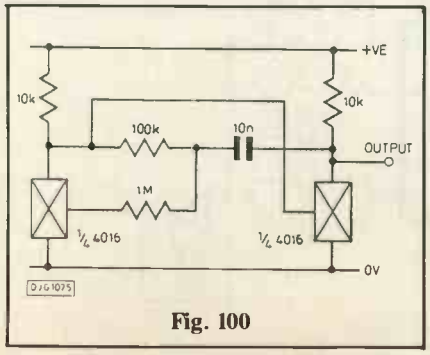

Fig. 100

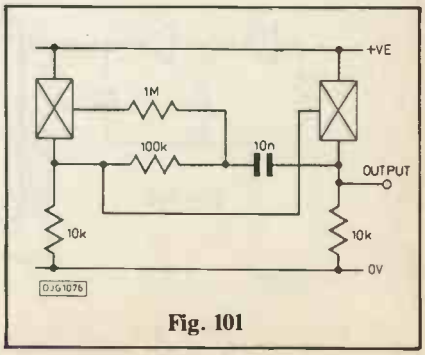

Fig. 101

CRYSTAL OSCILLATORS

In cases when the frequency accuracy or stability of normal r/c oscillators is not good enough, crystal oscillators are useful. CMOS gates can be used to make crystal oscillators. An example circuit is

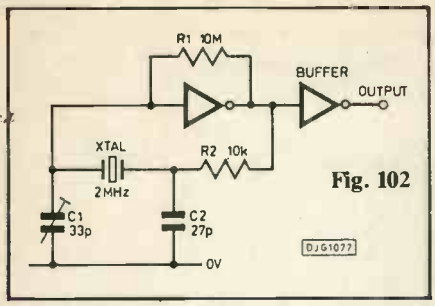

Fig. 102

shown in Fig. 102.

In this circuit, R1 biases the input of the inverter to prevent it drifting to logic 1 or logic 0 and just sitting there. C1 provides the standard loading for the crystal.. Many crystals are specified to oscillate at their resonant frequency when loaded by a capacitance of 20pF. If this capacitance is varied, the frequency may be adjusted *slightly* either side of the nominal frequency.

The purpose of R2 and C2 is to provide suitable loss and phase shift to make the pi network correctly, and to provide attenuation at higher frequencies or prevent the crystal oscillating at its third or fifth overtone. As a rule of thumb, R2 should be in the range 10k to 47k, and the phase shift given by R2 and C2 at the required operating frequency should be approximately 45° to 55°.

Some types of crystal do not work with ordinary buffered 4000 series cmos gates. Unbuffered A-series gates can sometimes work better in this application. This type of gate has also proved more appropriate in certain r/c clock oscillator applications, when required to run on a low supply voltage.

Certain ics, such as the 4060, incorporate inverters for use as oscillator elements on-chip. The circuitry of these inverters is optimised for use as an oscillator, and they normally work very well in this application.

SIMPLE DACS

Normally, a special ic is used for digital to analogue conversion, but because cmos outputs swing extremely close to the supply rails, it is possible to use them to switch resistors and perform digital to analogue conversion directly. Clearly, the resistor values used must not place too great a demand on the current sink or source capability of the cmos outputs, or else the voltage swing will be degraded.

The circuit of Fig. 103 shows a possible application circuit, which uses the R-2R-4R-8R principle to perform the digital to analogue conversion. The resistors are connected to the output of a counter which counts up, so the circuit shown will simply produce a staircase ramp.

A simple four-bit conversion can be useful in a number of applications, not demanding great precision or resolution. One example of this might be to provide the integral function in a two- or three-term control loop. Less esoteric applications would include providing indication on an analogue meter of the approximate value of the digital signal, and controlling a voltage controlled filter under digital control.

The principle shown in Fig. 103 is alright for up to four bits, but becomes impractical for larger numbers. An R-2R network as shown in Fig. 104 is suitable for more bits, and has the added advantage of equalising the loading on the cmos outputs. This avoids causing differences in the voltage swing due to different loading on the different outputs. A circuit of this type is certainly suitable for up to 6 bits.

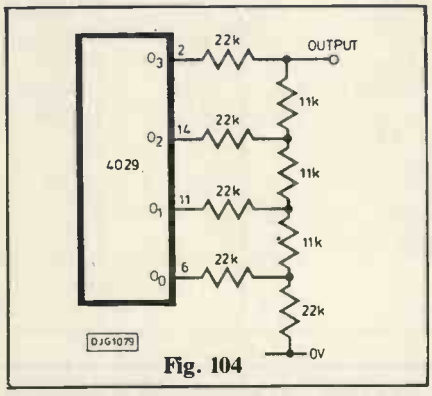

Fig. 104

CMOS is often used for small control circuits which receive disparate types of signal. One requirement which surfaces from time to time is to detect the presence of a clock edge and produce a short pulse. The circuit of Fig. 105 shows a completely reliable method of doing this, using an exclusive-OR gate, and a Schmitt trigger. The Schmitt trigger

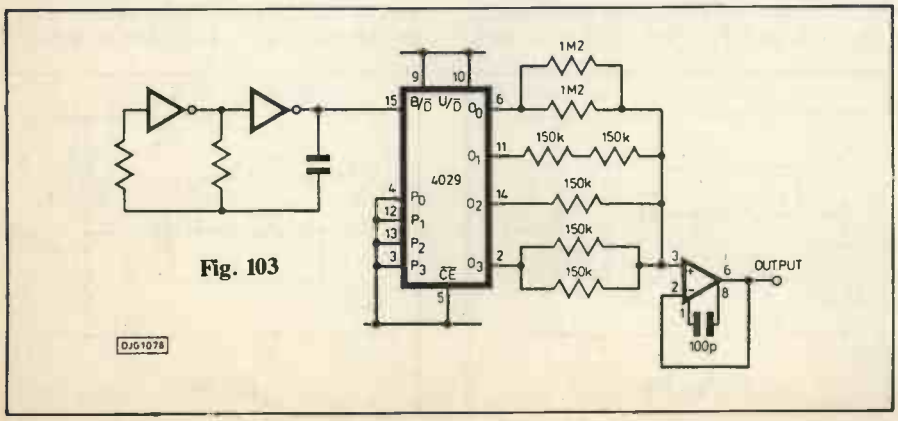

Fig. 103

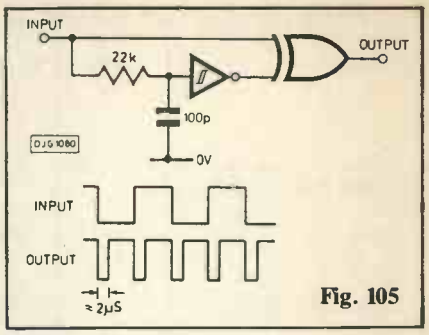

Fig. 105

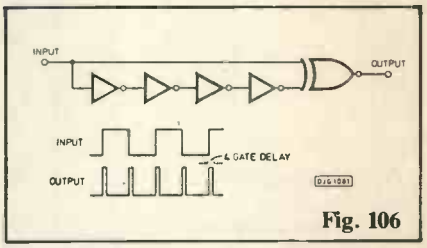

Fig. 106

switches cleanly when the r/c time constant charges to a certain level, so that if a clean input pulse is provided then a clean output pulse will be generated. If necessary the input signal could be cleaned up by a Schmitt trigger.

The circuit of Fig. 106 shows a means of doing this edge-detection without work very well, but it will produce an output pulse of a length equal to the extra gate delays imposed. Such a short pulse can be difficult to view on an oscilloscope when testing the circuit, and it can be degraded by the wiring in a system which is generally designed to work at low frequencies. It does however have the advantage that no passive components are required, and spare gate portions are used instead. For most hobbyist applications, the circuit of Fig. 105 is to be preferred.

The use of Schmitt triggers and r/c networks leads to the provision of a timed series of pulses on receipt of a clock edge. Such a system may be used, for example, to make sure that a control circuit has been reset and allowed to commence operation before its control outputs are enabled. The circuit in Fig. 107 performs this timing function.

This circuit does look rather clumsy, and a slightly purer design would use a

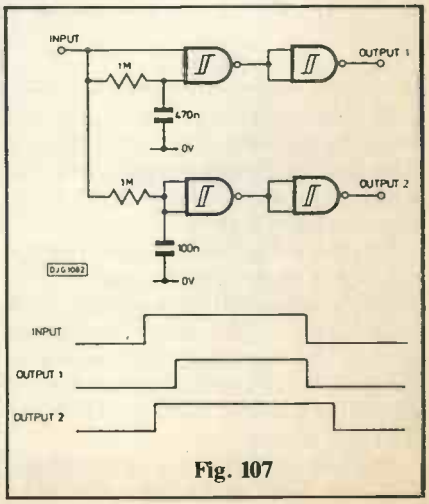

Fig. 107

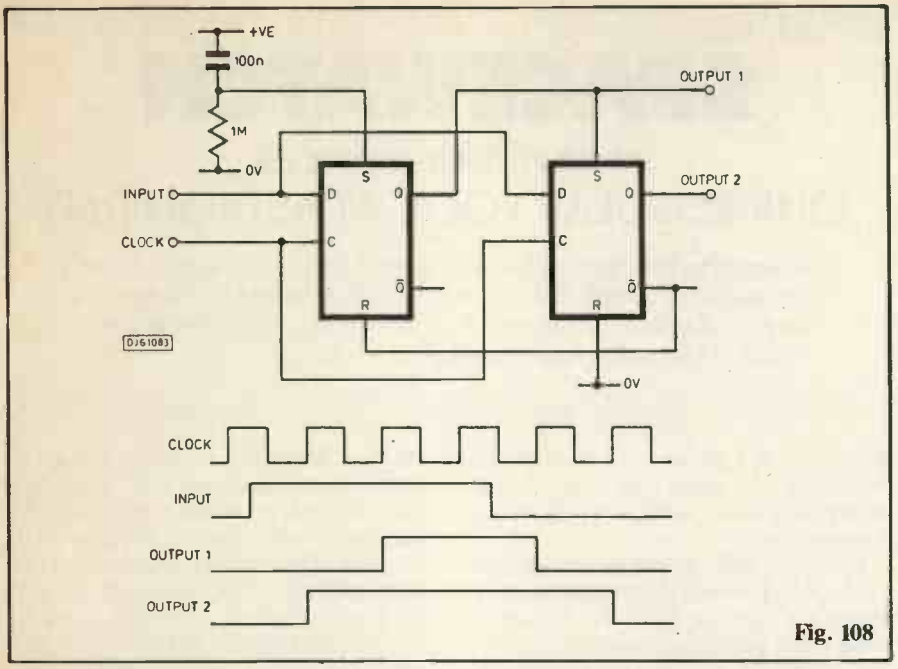

Fig. 108

system clock to clock flip-flops wired as shown in Fig. 108. This circuit costs no more than the one using passive components, and would take up less board space on a printed circuit board containing mostly ics. It is also less vulnerable to faults caused by incorrect component placement.

BATTERY BACKUP

Because of its low power consumption, cmos lends itself to battery operated and battery backed circuitry. In the circuit of Fig. 109, a rechargeable battery is shown, connected so as to retain the state of a counter when the main equipement power is removed. In this sort of application, it is envisaged that the main equipment power would operate current-hungry devices such as displays, which the battery could not power for very long.

In this circuit, shown only in outline, the display drives are powered by the battery as well to prevent the battery trying to power the rest of the circuit via the input protection diodes of the 4511s. The outputs of the 4511s do not source current, they only sink it, so the displays can be supplied from the main power supply and not be inconvenienced when it is switched off.

In this particular circuit I have provided some protection for the counter from clock pulses occurring when the main power is switched off, but spurious pulses could be allowed through as the power disappears. The unit in which this was used was under operator control, and the operator could not reach the count switches at the same time as switching off the mains, so that more extreme protection measures were not needed.

CMOS gates can give spurious outputs at power supply levels of just under three volts, so that if better protection from spurious pulses was required the input of the AND gate, which is running on the battery supply, should be driven from a comparator made with discrete components. The comparator should be designed to switch its output to logic 0 when the main power supply goes down to (say) 6V.

I have employed this circuit in practice, and it works very effectively. In the development stage, it provided me with an unintended demonstration of the static sensitivity of cmos gates. At first, the current consumption of the prototype was too low to measure conveniently. After some modification work, carried out in a hurry, and without using the anti-static wrist strap, the current consumption increased to the point where it would have flattened a rechargeable battery over a period of 24 hours. This level of current consumption would have passed unremarked in many designs, but it indicates the presence of damage which may later cause failure.

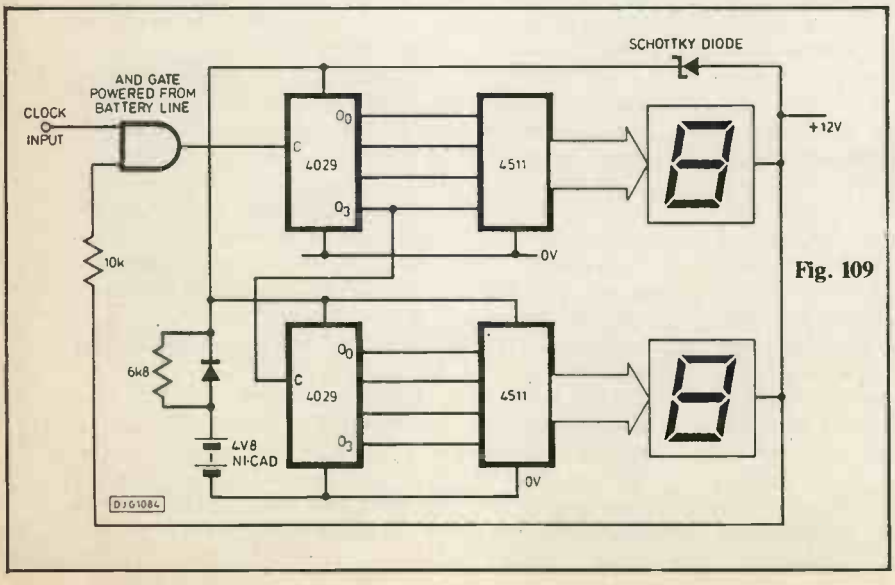

Fig. 109

HIGH SPEED CMOS

Possibly the standard logic of the future will be the 74HC range of cmos. This logic family has the cmos advantage of low power consumption at low frequencies, but it operates much faster than 4000 series cmos. No advantage is completely without drawbacks, of course, and in the case of 74HC the drawback is that it requires a 5V power supply. This restriction may not be convenient in low speed circuits incorporating analogue and digital circuitry but it is not usually a problem.

Most of the design considerations which relate to 4000 series cmos will apply to 74HC. In addition, more attention should be given to the routing of ground connections, and to decoupling at regular intervals on a pcb. The edge speeds of 74HC are much greater than with 4000 series cmos, and interference may be radiated from high speed circuits unless they are in screened boxes.

74HC cmos is less likely to be used by the home constructor, so I shall not delve too deeply into the subject. Briefly, the operating speed is similar to that of LS-ttl, but the power consumption is much lower, at .003μW for a quiescent gate as against 8mW for an LS-ttl gate in quiescent state. The current consumption of a 74HC gate is about the same as that for the LS-ttl gate at a frequency of approximately 20MHz.

The output sink and source current for high speed cmos is typically 4mA. Output rise and fall times are around 20ns and propagation delays are around 23ns. These figures are similar to those for LS-ttl, and, as the pin outs of these and 74LS ttl are identical, 74HC logic is beginning to take up where 74LS left off.

That's your lot for this month, folks. Next month I will be looking at some of the design criteria for using emitter coupled logic (ecl). PE

SPACEWATCH

BY DR PATRICK MOORE CBE

OUR REGULAR LOOK AT ASTRONOMY

Among the space probes sending back images or due to do so are several old ones which could be reactivated for further service. Remember Giotto? And the supernova in the large cloud of Magellan has acquired a pair of halos.

So far there continues to be good news from Voyager 2, on its way to Neptune; images of both Neptune and Triton have been obtained, though as yet they do not show much, and the spacecraft remains in its 'cruise mode'. Long before it reaches Neptune, the Russian Phobos probes will have arrived at their target, and we hope for exciting news early in the New Year.

The great Australia Telescope has been officially opened by the Prime Minister of Australia, Mr Hawke, at a ceremony at Culgoora, in New South Wales. This is a major step forward, and shows that radio astronomy has really 'come of age'.

Everyone will remember the Giotto probe, which passed through the head of Halley's Comet in 1986 and obtained close-range pictures of the nucleus. The space-craft survived, and should be back in the vicinity of the Earth by the middle of 1990. It has been announced that the ESA team now plans to try to re-activate it, and according to the Project Scientist, Rüdeger Reinhard, it may be that most of the experiments are still functional. The attempt at re-activation will be made early in 1990. If all goes well, Giotto will pass within 22,000 km of the Earth on 2 July 1990, and may be sent off for a second comet encounter, possibly with Comet Grigg-Skjellerup on 10 July 1992. The two Japanese comet probes, Sakigake and Suisei, are in working order, and may also be used for further missions; Sakigake to Comet Honda-Mrkos-Pajdusaková on 3 February 1996,

The Sky This Month

The nights are darker now (remember that Summer Time ends on October 23) and the stars are coming into their own. This is also rather a good time for the planets.

Mercury is at inferior conjunction on October 11, but then moves rapidly away from the Sun to western elongation on the 26th. This is the best morning apparition of the year so far as we are concerned, and Mercury should be a naked-eye object from about the 18th through to the first week in November. At its brightest, on the 26th, the magnitude is −0.5, brighter than any star visible from Britain with the exception of Sirius. Against its light background Mercury can be elusive, but once you have identified it you will wonder how you could have overlooked it!

Venus, magnitude −4, is also in the dawn sky but is quite impossible to miss. It is now past dichotomy, and the phase increases from 70 per cent to 80 per cent during October, so that the shape is clearly gibbous – as binoculars will show, even though no telescope will show much on the planet's cloud-hidden disk.

Mars is only just past opposition, and remains excellently placed in the evening sky throughout October, though it fades from magnitude −2.6 to −1.9 – still considerably brighter than Sirius. It is virtually 'full' at the start of the month, but by the end of October has changed to 95 per cent, so that telescopes show it to be appreciably gibbous. The apparent diameter decreases from 23 seconds of arc to 19 seconds of arc, so that even a small telescope will continue to show the main dark markings such as the V-shaped Syrtis Major – unless, of course, clouds in the Martian atmosphere obscure the surface, which is quite possible. If you use say a 6-inch telescope under good conditions, and see very little, you may be sure that a dust-storm is in progress.

Jupiter, too, is an evening object, moving slowly westward in Taurus; the magnitude is −2.7, so that it now slightly outshines Mars. It remains visible throughout the hours of darkness. Saturn passed opposition in June, and is now past its best for this year, but remains visible for some time after sunset, though it is inconveniently low down. The variable satellite Iapetus is east of the planet, and not too easy to see, but small telescopes will show Titan, which is at eastern elongation on the 6th and 22nd and at western elongation on the 14th and 30th.

The Moon is new on October 10, and full on October 25. There are no solar or lunar eclipses this month.

The main meteor shower during October is that of the Orionids, associated with Halley's Comet. They are active between October 16 and 27, and reach maximum on the 22nd, with a zhr of about 25, but obviously the Moon will interfere, and it is not likely that the Orionids will put on a really impressive display this year. Some Taurids are also on view; these are slow meteors, associated with Encke's Comet. They are at their best early in the month, when the Moon is not obstrusive.

The evening sky is dominated by Pegasus, with its famous Square; look for the Andromeda Galaxy, M.31, which is a naked-eye object, though even with a moderate-sized telescope it is not spectacular. It is just over 2,000,000 light-years away. Novæ have often been seen in it, and there has been one supernova, S Andromedæ, which blazed out in 1885 and reached the fringe of naked-eye visibility. Unfortunately we do not know a great deal about it. In 1885 it was not even known that M.31 is an external system, and most astronomers tended to agree with J.E. Gore that in all probability 'the star had nothing to do with the Nebula'. How wrong he was!

Ursa Major is at its lowest in the north, so that the W of Cassiopeia is almost overhead. The "Summer Triangle" is still on view, but Altair at least is becoming low. In the east we can now see some members of Orion's retinue, including the Pleiades star-cluster, and Orion itself has risen by the early hours of the morning.

and Suisei to Comet Giacobini-Zinner on 24 November 1998. Of the Halley armada, only the two Russian probes, Vega 1 and Vega 2, appear to have come to the end of their careers.

SUPERNOVA LIGHT ECHOES

The appearance of the supernova 1987A, in the Large Cloud of Magellan, was one of the most important astronomical events for many years; it was indeed the first naked-eye supernova since Kepler's Star of 1604. At its brightest, around May, it dominated the whole area of the sky, and it was intensively studied from all observatories from which it could be seen; it was sad that it was too far south to be seen from anywhere in Britain or Europe. It was remarkable inasmuch as the progenitor was not a red supergiant, but a blue star – which explained why it was underluminous by supernova standards; there was less surface area to expand.

Recent photographs, taken by David Malin with the 3.9-metre Anglo-Australian Telescope at Siding Spring in New South Wales, show 'light echoes' in the form of two complete luminous rings surrounding the old star. They have been known for several months, but Malin's pictures are the first to show them as complete circles. They are caused by two thin sheets of gas, each of which contains 'dust', lying between the supernova and ourselves; the dust-grains are being illuminated by light which left the supernova at the height of the outburst. In other words, they are not new – we just could not see them before, because there was nothing to make them shine. The inner ring is about 476 light-years in front of the supernova, and the outer ring about 1200 to 1350 light-years in front of the supernova; the outer ring is tilted, and seems to be centred on the Tarantula Nebula, 30 Doradûs, a region where many massive stars have formed, and previous supernovæ must have flared up every few centuries. The Tarantula Nebula is truly impressive; if it were as close to us as the Orion Nebula (around 1500 light-years) it would cast shadows.

What will happen to the supernova now? It will presumably form either a pulsar or a black hole; we do not yet know. A pulsar may be the more likely candidate, but as yet no signs of it have been detected, and we must simply wait and see. At least astronomers have cause for satisfaction. If we cannot have a supernova in our own Galaxy, then at least a supernova in the Large Cloud is the next best thing. **PE**

Do not miss a single issue of

Astronomy Now

Place a regular order with your newsagent or take out an annual subscription.

☆ ☆ ☆ ☆ ☆

Rates: U.K £15 - Outside U.K. £18 (Surface Mail)
Airmail Rates:
North Africa & Middle East £25
North & South America £30
Australia, New Zealand & Far East £35

Cheques payable to U.S. banks now accepted : $35 (Surface Mail), $55 (Air Mail) for North America.

Send your subscription now to : Astronomy Now Subscription Dept, Alan Wells International, P.O Box 500, Leicester, LE99 0AA.
Tel: 0858 410510

Astronomy Now is published by Intra Press, publishers of Practical Electronics, Program Now and Office at Home

BLAME APORSCHIONED

I for one would have expected that an upmarket car like a Porsche would be free from electronic problems.

Not so, it seems from the story being laughed at around the office. My reliable informant knows of a certain Porsche owner who took the car into the West End of London on a shopping spree around stores of the Arabian Empire. The only car park available was one into which cars are crammed, and the keys left in the ignition so that attendants can move cars if necessary.

This posh parks the car, leaves the keys in, but by habit activates the door locks by means of the remote control sported by such elite jalopies. Unkown to owner though, the system appears to have a design fault and other Porsches were nearby. Neither expecting, nor hearing, the muted clunk-click of other Porsche locks engaging in the no-entry position, the owner departs the scene.

Only on returning some hours later is our friend made aware of the chaos caused to the harassed attendants and other Porsche owners who had also left their keys, and their own remote controls, very safely in the cars.

Only a few days after being regaled by the Porsche problem I overheard a conversation in another car park.

"... that learner", says one man to the other, "then slammed into the back of me. So I jumped out to give him a mouthful and accidentally pressed the central door locking button. It's one of those that automatically winds up the windows as well. So up goes the window, and traps my hand. Pulling free, I stumbled onto the door, closing it. And my keys were inside - with all the doors now locked!"

Technology still needs taming... **Ed.**

POPULAR BAKERS DOZEN PACKS (Still available)

All packs are £1 each, if you order 12 then you are entitled to another free. Please state which one you want. Note the figure on the extreme left is the pack ref number and the next figure is the quantity of items in the pack, finally a short description.

BD2	5	13A spurs provide a fused outlet to a ring main where device such as a clock must not be switched off
BD7	4	in flex switches with neon on/off lights, saves leaving things switched on
BD9	2	6v. 1A mains transformers upright mounting with fixed clamps
BD11	1	6½" speaker cabinet ideal for extensions, takes your speaker. Ref BD137
BD13	12	30 watt reed switches, it's surprising what you can make with these – burglar alarms, secret switches, relay etc etc.
BD22	2	25 watt loud speaker two unit cross-overs
BD29	1	B.O.A.C. stereo unit is wonderful value
BD30	2	nicad constant current chargers adapt to charge almost any nicad battery
BD32	2	humidity switches, as the air becomes damper the membrane switches and operates a microswitch
BD34	48	2 meter length of connecting wire all colour coded
BD42	5	13A rocker switch three tag so on/off, or change over with centre off
BD45	1	24hr time switch, ex-Electricity Board, automatically adjust for lengthening and shortening day. Original cost £40 each
BD49	10	neon valves, with series resistors, these make good night lights
BD56	1	mini uniselector, one use is for an electric jigsaw puzzle, we give circuit diagram for this. One pulse into motor, moves switch through one pole
BD59	2	flat solenoids – you could make your multi-tester read AC amps with this
BD67	1	suck or blow operated pressure switch, or it can be operated by any low pressure variation such as water level in water tanks
BD91	2	mains operated motors with gearbox. Final speed 16rpm. 2 watt rated
BD103A	1	6 750MA power supply, nicely cased with input and output leads
BD120	2	stripper boards each contains a 400v 2A bridge rectifier and 14 other diodes and rectifiers as well as dozens of condensers etc
BD122	10m	twin screened flex with white pvc cover
BD128	10	very fine drills for p.c.b. boards etc. Normal cost about 80p each
BD132	2	plastic boxes approx. 3" cube with square hole through top so ideal for Interrupted beam switch
BD134	10	motors for model aeroplanes, spin to start so needs no swithc
BD139	6	microphone inserts – magnetic 400 ohm also act as speakers
BD148	4	reed relay kits you get 16 reed switches and 4 coil sets with notes on making c/o relays and other gadgets
BD149	6	safety cover for 13A sockets – prevent those inquisitive little fingers getting nasty shocks
BD180	6	neon indicators in panel mounting holders with lens
BD193	6	5 amp 3 pin flush mounting sockets make a low cost disco panel
BD196	1	in flex simmerstat – keeps your soldering iron etc always at the ready
BD199	1	mains solenoid very powerful has 1" pull or could push if modified
BD201	8	Keyboard switches – made for computers but have many other applications.
BD210	4	transistors type 2N3055 probably the most useful power transistor
BD211	1	electric clock mains operated put this in a box and you need never be late
BD221	5	12v alarms make a noise about as loud as a car horn. Slightly soiled but OK
BD242	2	6" x 4" speakers 4 ohm made from Radiomobile so very good quality
BD246	2	tacho generators, generates one volt per 100 revs
BD252	1	panostat, controls output of boiling ring from simmer up to boil
BD259	50	leads with push on ¼" tags – a must for hook ups – mains connections etc
BD263	2	oblong push switches for bell or chimes, these can mains up to 5 amps so could be foot switch if fitted into pattress
BD268	1	mini 1 watt amp for record player. Will also change speed of record player motor
BD275	1	Guitar mic – clip on type suits most amps
BD283	3	mild steel boxes approx. 3" x 3" x 1" deep – standard electrical
BD293	50	mixed silicon diodes
BD296	3	car plugs with lead, fits into lighter socket
BD305	1	tubular dynamic mic with optional table rest

Most other packs still available and you can choose any as your free one.

5A BATTERY CHARGER KIT – all parts including case only £5 add £1 postage.

OVER 400 GIFTS YOU CAN CHOOSE FROM

There is a total of over 400 packs in our Baker's dozen range and you become entitled to a free gift with each dozen packs.

A classified list of these packs and our latest "News Letter" will be enclosed with your goods, and you will automatically receive our next news letter.

NEW ITEMS

LASER TUBE Made by Phillips Electrical. New and unused. This is helium-neon and has a typical power rating of 1.6mW. It emits random polarised light and is completely safe provided you do not look directly into the beam when eye damage could result. DON'T MISS THIS SPECIAL BARGAIN – £29.95 plus £3 insured delivery – power supply kit for our lazer tube gives 8KV striking & 1.25KV running at 5mA. £13. + £2 p&p unless ordered with tube.

EX GPO MULTI-RANGE TEST METER 12/C1 Complete in real leather case with carrying handle – this is a 20,000 OPU instrument, with 19 ranges including AC and DC volts – dc current 5mA to 1A 4ohms ranges up to 20meg – the low ohms range is particularly useful, you will be able to read right down to one ohm and below. This meter also has provision for reading dc current 0-5amp and 0-25amp. Meter size 6in long x 3in wide x 2in deep. Leather case has compartment for the test leads, prods and croc clips all of which are included. Can be used in the case. Not new but are in first class condition – tested and guaranteed. Price is £7.00. Order ref 7P5. Leather case available separately £3.00 ref 3P47.

RE-CHARGEABLE NICADS 'D' SIZE these are tagged for easy joining together but tags, being spot welded, are easy to remove. Virtually unused, tested and guaranteed. £2.00 ref 2P141 or 6 wired together for £10.00 ref 10P47.

8 TRACK CASSETTE DECK Complete with cassette holder. In fact, if you have any 8 track cassette then with the addition of 2 speakers this unit would play them. As 8 track cassettes are no longer made the units have become surplus, however, they do contain lots of useful parts: motor, tape head and drive, pulley wheels, etc., and a stereo amplifier. Mains operated. Brand new in makers packing. Only £3.00 each plus £1.00 additional postage. Order ref 3P46.

TWIN CASSETTE & RADIO: LW, MW, FM bands covered. Recording, copying, editing & taping etc... etc... A very handsome portable unit. Reg. price £60. Our price £30.

3½in FDD CHINON 80 track 500k. Shugart compatible interface. Standard connections, interchangeable with most other 3½in and 5¼in drives. Brand new. £28.50 plus £3 insured post.

3in FDD HITACHI HFD305SXA Shugart compatible interface. 500k on 3in disc. Recommended for many Amstrads but interchange with most drives. £29.50 plus £3 insured post.

FDD CASE AND POWER SUPPLY KIT for the 3in or 3½in. £11. Ref 11P2 for the Chinon. 11P3 for the Hitachi.

9in MONITOR made for ICL, uses Phillips black and white tube. Brand new and complete but uncased. £16 plus £5 post.

ACORN COMPUTER DATA RECORDER REF ALF03 Made for the Electron or BBC computers but suitable for most others. Complete with mains adaptor, leads and handbook. £10. Ref 10P44.

AKAI MIDI RACK Lovely piece of furniture will hold Midi system or computer. Has three adjustable shelves and a hinged glass fronted lower section. Height 3½ft, width 14in, depth 14in. On casters. £15 plus £8 Securicor delivery.

POWERFUL IONISER Uses mains transformer. Generates approx 10 times more ions than the normal diode/cap ladder circuits. Complete kit £11.50 plus £3 post.

STEREO SPEAKERS Each 10watts 8ohm and twin speakers mounted in Walnut-finish cabinets, size 16in high x 10in wide x 6in deep. Front is black Dacron and the finish is very pleasing. Price £7 per pair. Extra postage and packing £3.

STABILISED 15v 2a PSU kit which mounts on SRB panel. Mains operated. Ideal to drive monitor, etc. Price only £5.

SMOOTHING CAPACITOR 2,350uf 63v 10amp at 50°C. Can type with mounting bracket. Price £2. Our ref 2P206.

SMOOTHING CAPACITOR 2,200uf 63v 5.8amp at 50°C. Can type with mounting bracket. Price £1. Our ref BD644.

10amp 100v BRIDGE RECTIFIER ASSEMBLY comprising 4 diodes mounted on two 4in x 3in sinks with bottom insulators. Price £2. Our ref 2P207.

VERY POWERFUL MAGNETS Although only less than 1in long and not much thicker than a pencil these are veery difficult to pull apart. Could be used to operate embedded reed switches, etc. Price 50p each, 2 for £1.00. Our ref BD642.

AC GENERATOR This is really a motor with a permanent magnetic rotor. You would have to make a handle. The voltage out could be up to 100v and the frequency would depend upon the speed of rotation. One use could be to trigger our SS relay 2P183. Another use could be for ringing a bell in a 2 wire telephone circuit. Price £1.00. Our ref BD640.

FLIP-OVER DIGITAL CLOCK Quite an eyecatcher, this is mains operated. The figures flip-over per minute and per hour and give a larger than usual visual display. Supplied complete with front and perspex panels to glue together to make its case. £2.00 each. Our ref 2P205.

MOTOR TO WORK OFF SOLAR CELLS Could drive a fan or other device. Speed would depend upon the number of cells used. Six of our BD631's in series would cause it to rev at a reasonable speed. With twelve it would be quite fast and current would be 25-30mA depending on load. Price of the motor is £1.00. Our reel BD643.

VERY POWERFUL 12 VOLT MOTORS – 1/3rd HORSEPOWER Made to drive the Sinclair C5 electric car but equally adaptable to power a go-cart, a mower, a rail car, model railway, etc. Brand new. Price £15.00 plus £2.00 postage. Our ref 15P1.

UNUSUAL MAINS MOTOR Quite small, measures only 2in x 2in x 1in approx but is surprisingly powerful. It revs at 3,000rpm and is reversible. It has good length ¼in diameter spindle. Price £1.00. Our order ref BD640.

RUBBER 13amp EXTENSION LEAD SOCKET Virtually unbreakable, made by Duraplug. £1.00 each. Order ref BD641.

J & N BULL ELECTRICAL

Dept. P.E., 250 PORTLAND ROAD, HOVE, BRIGHTON, SUSSEX BN3 5QT

MAIL ORDER TERMS: Cash, P.O. or cheque with order. Orders under £20 add £1.50 service charge. Monthly account orders accepted from schools and public companies. Access & B/card orders accepted. Brighton (0273) 734648 or 203500.

NEW ITEMS

Some of the many described in our current list which you will receive if you request it.

8 TRACK CASSETTE DECK: A complete mains operated unit. Will play 8 track tapes into headphones or amplifier. Brand new, in manufacturers packing. Only £3 + £2 p&p.

PAPST AXIAL FAN – MANUFACTURERS REF NO TYP4580N This is mains operated. 15watt rating and in a metal frame with metal blades so OK in high temperatures. Body size approx 4¾in square x 1½in thick. £6.00 each. plus £1.00 postage. Our ref 6P6.

PRICE REDUCTION FOR THAT MODEM CONNECTOR Standard BT flat plug and 3 metre lead. Price now reduced to 50p, 2 for £1.00 Ref BD552.

BRIGHT LIGHT SWITCH will control mains circuits up to 10amps, gets it switch pulses from car headlights, sun, bright daylight, etc., so it does not use batteries and its sensor is completely isolated from the mains. With full instructions supplied. Price £10.00. Order ref 10P46.

13A PLUGS good make complete with fuse, parcel of 5 for £2. order Ref. 2P186.

13A ADAPTORS Takes 2 13A plugs, good British make, packet of 3 for £2. order Ref. 2P187.

8" GREEN SCREEN MONITOR Complete, cased and ready to work. Composite input so just right to use with Acorn or other computers or camera. Requires only 15 volt D.C. Has been used for a short period but we have tested and give six months guarantee, Price £17.50 plus £3 post etc.

FREE POWER! Can be yours if you use our solar cells – sturdily made modules with new system bubble magnifiers to concentrate the light and so eliminate the need for actual sunshine – they work just as well in bright light. Voltage output is .45 – you join in series to get desired voltage – and in parallel for more amps. Module A gives 100mA Price £1 Our Ref: BD631 Module C fives 400mA Price £2 Our Ref: 2P199 Module D gives 700mA Price £3 Our Ref: 3P42.

SOLAR POWERED NI-CAD CHARGER 4 NI-Cad batteries AA (HP7) charged in eight hours or two in only 4 hours. It is a complete, boxed ready to use unit. Price £6 Our Ref: 6P3.

15A PANEL METER These have been stripped from Government's surplus battery charger units made originally for army use. Unused, tested but of course rather old, diameter 2" can be surface or flush mounted. £3 each Our Ref: 3P40.

METAL PROJECT BOX Ideal size for battery charger, power supply etc; sprayed grey, size 8"x4¼"x4" high, ends are louvered for ventillation other sides are flat and undrilled. order ref: 2P191 £1 post.

20v-0-20v Mains transformers 2½amp (100 watt) loading, tapped primary. 200-245 upright mountings £4. Order Ref. 4P24 add £1 post.

MOST USEFUL CASE constructed entirely from heavy gauge aluminium size approx. 7½" wide 5¾" high and 16" long. But its construction is such that it is a very simple job to reduce the length to your own requirements. The long top and both sides are flat and completely free from holes. One end has mains input socket – fuse switch – the other end has output plug – in brand new condition. Price £10 plus £3 postage. Ref 10O35.

12V DC FAN made by the famous PAPST company, these are brushless so are ideal for cooling computers without causing any electrical interference, size approximately 3½ x 3½ x 1½, all brand new. Price £10, our ref: 10P33.

AXIAL FANS very quiet running and purpose designed for cooling instruments etc made by the famous German PAPST Company – these are 4½" square approx. 230v mains operated and metal bladed os O.K. in sunbeds and other hot spots – price £8 each. Our Ref: 8P8.

3 CORE FLEX BARGAIN No. 1 Core size 5mm so ideal for long extension leads carrying up to 5 amps or short leads up to 10 amps. 15mm for £2. order Ref. 2P189

3 CORE FLEX BARGAIN No. 2 Core size 1.25mm so suitable for long extension leads carrying up to 13 amps – or short leads up to 25A, 10m for £2. order Ref. 2P190

ASTEC P.S.U. Switch mode type so very compact. Normal 230V input. Has 3 outputs:– +5V at 3.5 amps, +12V at 1.5 amps and –5V at 0.3 amps. Should be ideal to drive floppy disc units. Regular price around £30, our price only £10 although brand new and unused. Order our ref 10P34.

24 HOUR TIMESWITCH 16A C/O contacts, up to 6 on-offs per day. Nicely cased for wall-mounting. Price £8.00. Ref. 8P6.

CAPICITOR BARGAIN Axial ended 4700 uf at 25V. Superior Jap make, normally 50p each, you get 4 for £1.00 Ref. 613.

PIEZO ELECTRIC FAN an unusual fan, more like the one used by Madame Butterfly, than the conventional type, it does not rotate. The air movement is caused by two vibrating arms. It is American made, mains operated, very economical and cause's no interference. So it is ideal for computer and instrument cooling. Price is only £1 each. Ref BD598

SPRING LOADED TEST PRODS – heavy duty, made by the famous Bulgin company. Very good quality. Price four for £1. Ref. BD597.

CASE WITH 13A PRONGS – to go into 13A socket, nice size and suitable for plenty of projects such as car battery trickle charger, speed controller, time switch, night light, noise suppressor, dimmers etc. Price – 2 for £1. Ref. BD565

ALPHA-NUMERIC KEYBOARD – this keyboard has 73 keys arranged in two groups, the main area is a QWERTY array and on the right is a 15 key number pad, board size is approx. 13" x 4" – brand new but offered at only a fraction of its cost namely £3 plus £1 post Ref: 3P27.

WIRE BARGAIN – 500 metres 0.7mm solid copper tinned and p.v.c. covered. Only £3 + £1 post. Ref. 3P31 – that's well under 1p per metre, and this wire is ideal for push on connections.

INTERRUPTED BEAM KIT – this kit enables you to make a switch that will trigger when a steady beam of infra-red or ordinary light is broken. Main components – relay, photo transistor, resistors and caps etc. Circuit diagram but no case. Price £2. Ref. 2P15.

3-30V VARIABLE VOLTAGE POWER SUPPLY UNIT – with 1 amp DC output. Intended for use on the bench for experimenters, students, inventors, service engineers etc. This is probably the most important piece of equipment you can own. (After a multi range test meter). It gives a variable output from 3-30 volts and has an automatic short circuit and overload protection, which operates at 1.1 amp approximately. Other features are very low ripple output, a typical ripple is 3mV pk-pk, 1mV rms. Mounted in a metal fronted plastic case, this has a voltmeter on the front panel in addition to the output control knob and the output terminals. Price for complete kit with full instructions is £15. Ref. 15P7.

TRANSMITTER SURVEILLANCE (BUG) – tiny, easily hidden, but which will enable conversation to be picked up with FM radio. Can be housed in a matchbox, all electronic parts and circuit. Price £2. Ref. 2P52.

PLD PROGRAMMER

Part One By Chris Kelly and Steve Pattinson

AN OFFER YOU CAN'T RE-FUSE

This programmable logic device programmer works with the Philips PLS103 pld, one of the most straightforward logic devices to program. This is a good low-cost starting point for understanding plds and their uses.

Programmable logic devices, plds, are logic ics which can be programmed by the user to perform a wide variety of logic functions. Two introductory articles (PE OCT-NOV 87) described their use for *combinational logic* such as memory decoders and random logic, and for *sequential logic* such as counters and sequencers. These devices promise huge advantages in minimising logic circuit design time, reducing chip count for a given application and simplifying printed circuit boards.

Commercial programming equipment can cost between £1200 and £2000, far out of reach of the average hobbyist. Here we describe the construction and operation of a simple pld programmer which is only a fraction of the commercial cost but with the limitation of using only one type of pld, the Philips PLS103. However, this is one of the simplest programmable devices to understand and to program, with many useful applications.

THE PLS103

The PLS103 (Fig. 1) is a 28-pin field programmable gate array (fpga) with sixteen inputs I0 to I15 which, through true/complement buffers, present logic signals to a fuse array with nine AND gates.

The polarities of the nine outputs, F0 to F8, can be high or low and are individually determined by fuses X0 to X8 at the inputs of exclusive-or gates. When any Xn fuse is blown, the appropriate exclusive-or gate inverts the logic state from the true/complement array. The output buffer at ouput Fn inverts again so the overall function

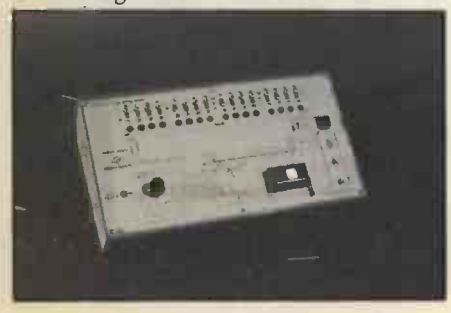

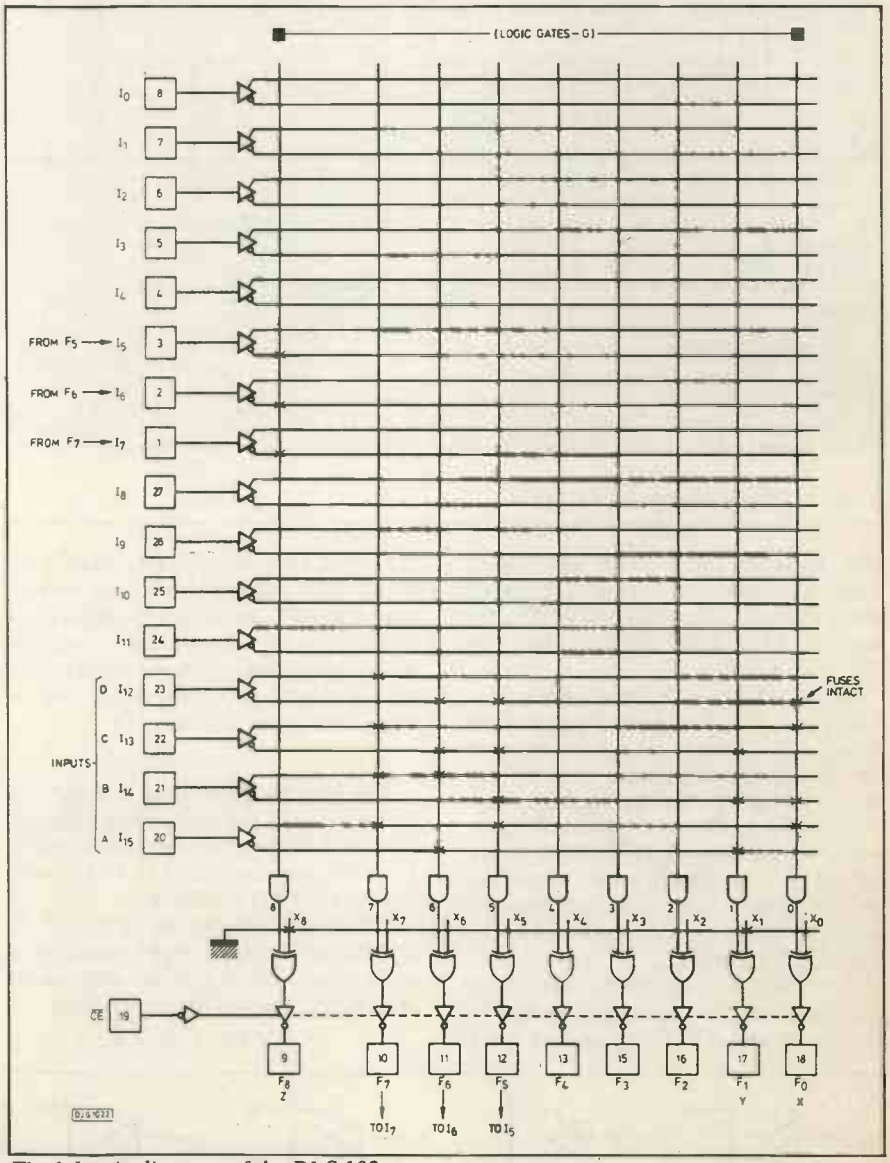

Fig.1 *Logic diagram of the PLS 103.*

between input and output appears as AND. This is referred to as a 'high output polarity', with code 'H' used on a program table as shown in Table 1.

With the appropriate X fuse intact the exclusive-or does not invert, yet the following output buffer does invert. Therefore, an AND function in the array can appear as a NAND function at the output. This is referred to as a 'low output polarity' with code 'L'.

Each input, let's call it In where n is a number between 1 and 15, is programmed individually for an output Fp, where p is between 1 and 8. Fig. 2 shows the four possible combinations of

$F_0(18)$	X	=	$A.\bar{B}.C.\bar{D}$	
$F_1(17)$	Y	=	$\bar{A}.\bar{B}.\bar{C}.$	= A+B+C
$F_2(16)$		=		
$F_3(15)$		=		
$F_4(13)$		=		
$F_5(12)$	F_5	=	$A.\bar{B}.\bar{C}.\bar{D}.$	
$F_6(11)$	F_6	=	$\bar{A}.B.\bar{C}.\bar{D}.$	
$F_7(10)$	F_7	=	A.B.C.D.	
$F_8(9)$	Z	=	$F_5+F_6+F_7$	= $F_5.F_6.F_7.$

GATE		INPUT															
POLARITY		I_{15}	I_{14}	I_{13}	I_{12}	I_{11}	I_{10}	I_9	I_8	I_7	I_6	I_5	I_4	I_3	I_2	I_1	I_0
F_0	H	H	L	H	L	–	–	–	–	–	–	–	–	–	–	–	–
F_1	L	L	L	L	–	–	–	–	–	–	–	–	–	–	–	–	–
F_2	O	O	O	O	O	O	O	O	O	O	O	O	O	O	O	O	O
F_3	O	O	O	O	O	O	O	O	O	O	O	O	O	O	O	O	O
F_4	O′	O	O	O	O	O	O	O	O	O	O	O	O	O	O	O	O
F_5	H	H	L	L	L	–	–	–	–	–	–	–	–	–	–	–	–
F_6	H	L	H	L	L	–	–	–	–	–	–	–	–	–	–	–	–
F_7	H	H	H	H	H	–	–	–	–	–	–	–	–	–	–	–	–
F_8	L	–	–	–	–	–	–	–	–	L	L	L	–	–	–	–	–
PIN NO.		20	21	22	23	24	25	26	27	1	2	3	4	5	6	7	8
VARIABLE NAME		A	B	C	D					F_7	F_6	F_5					

NOTES:
1. The FPGA is shipped with all links intact. Thus a background of entries corresponding to states of virgin links exists in the table, shown BLANK for clarity.
2. Unused inputs are normally programmed Don't Care (—).
3. Unused Gates can be left blank.

PROGRAM TABLE ENTRIES	AND		CONTROL	
	INACTIVE	O	HIGH	H
	I	H	LOW	L
	I	L	(POL.)	
	Don't Care	–		
	(I)			

Table 1: Program table for PLS103

fuse patterns for a given gate input. Unprogrammed plds have all fuses intact and the inputs of any unused AND gate are left in this state, identified by code 'O'.

Suppose the simple Boolean relationship $X=A.\bar{B}.C.\bar{D}$ is to be programmed where A,B,C and D are applied to input I15 to I12 and X is taken from F0 (as shown in Fig. 2). A and C are high input variables and $\bar{B}$ and $\bar{D}$ are low input variables. A high input variable (code 'H' in Fig. 2) at input In requires one fuse In intact and the other fuse In blown. An active low input variable (code 'L') has In intact with In blown.

$X=A.\bar{B}.C.\bar{D}$ uses only four input variables so the remaining twelve In inputs for that AND gate are not used. However, they might carry signals for other AND gates which would corrupt our wanted relationship if the other fuses remained intact. The unused inputs of an AND gate must become 'don't care' inputs by blowing both In and In fuses. A 'don't care' input has the code '–'.

The fpga program table in Table 1, is partly filled in for this simple example. Note that all the inputs are still available for remaining outputs F1 to F8 for other AND or NAND equations.

OR functions can be achieved by DeMorgan's Theorem which states that if each input to a NAND is individually inverted the overall function is OR:

$$Y = A + B + C = \overline{\bar{A}.\bar{B}.\bar{C}}$$

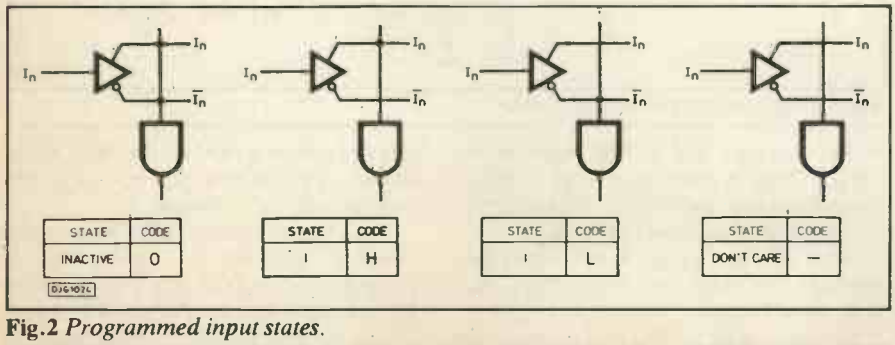

Fig.2 *Programmed input states.*

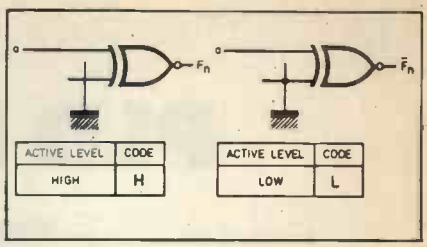

Fig.3 *Programming output polarity.*

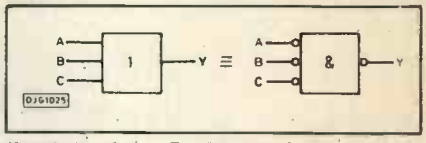

Fig.4 *Applying De Morgan's theorem to make a nand gate function as a nor gate.*

This is shown in Fig. 4. Implementing this on the PLS103 is simply a matter of leaving the complement fuses intact with the true fuses blown for input variables A,B and C and leaving fuse X1 of F1 intact. This is shown on Table 1 for output F1 which is programmed with an output polarity 'L', and inputs I15, I14 and I15 are programmed 'L'.

Sum of product terms such as

$$Z = \bar{A}.B.\bar{C}.\bar{D} + A.\bar{B}.\bar{C}.\bar{D} + A.B.C.D$$

can be implemented by feeding three separate AND outputs back to unused inputs and ORing them using DeMorgan's Theorem. This again is shown in Fig. 1 and Table 1. The term $A.\bar{B}.\bar{C}.\bar{D}$ is programmed to output F5, $\bar{A}.B.\bar{C}.\bar{D}$ to F6 and A.B.C.D to F7. These outputs are then externally connected to inputs I5, I6 and I7 respectively and complemented by blowing each In fuse. Output F8 is programmed 'L' to complete the equation

$$Z = \overline{\bar{F5}.\bar{F6}.\bar{F7}}$$

Note that with these examples three different logic functions are shown programmed on the same chip, leaving three outputs and nine inputs 'inactive' and therefore shown as 'O' in Table 1.

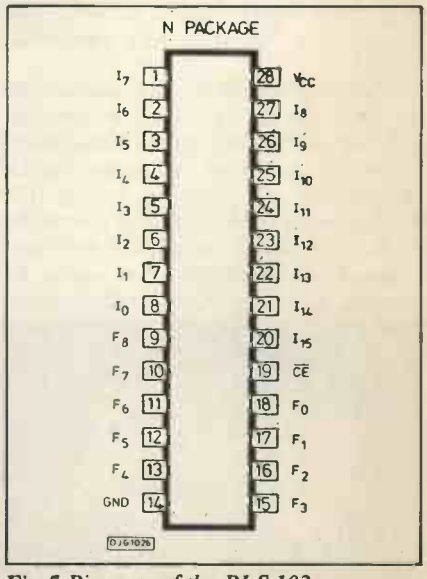

Fig.5 *Pin-outs of the PLS 103.*

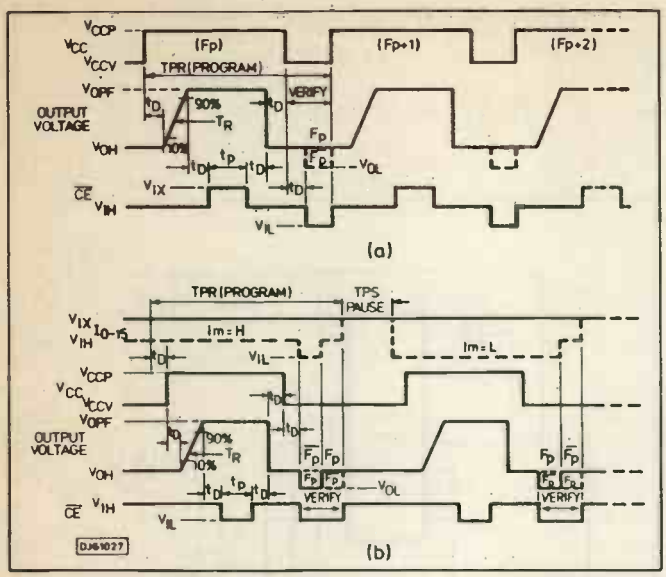

V_{CCV}	5.00 ± 0.25 V	Verify supply voltage. Adjust VR2 and measure 5 V STAB output
V_{CCP}	8.75 ± 0.25 V	Programming supply voltage. Adjust VR3 and measure 8.75 V output.
V_{OPF}	17.00 ± 1.00 V	Forced programming output voltage. Adjust VR4 and measure 17 V output.
V_{IX}	10.00 ± 0.5 V	$\overline{CE}$ program enable voltage. Adjust VR5 and measure 10 V output.
V_{OL}	< 0.45 V	Output low voltage.
V_{OH}	> 2.4 V	Output high voltage.
V_{IL}	0 to 0.8 V	Input low voltage.
V_{IH}	2.4 to 5.5 V	Input high voltage.
t_p	0.4 + 0.1 ms	Programming pulse width.

Table 2: Voltage and timing values.

Fig.6 *(Left) Programming waveforms.*

Even after programming a chip partially, the inactive or unused portions can be programmed at a later time for other functions.

PROGRAM AND VERIFY WAVEFORMS

The PLS103 is programmed in two stages, with reference to the pin configuration of Fig. 5. First the output polarity program-verify sequence is shown in Fig. 6a. The second stage is the input program-verify sequence as shown in Fig. 6b. The voltage and timing values are given in Table 2.

To program an output for a high polarity requires the appropriate X fuse to be blown by the following sequence. All inputs, In, are disabled by raising the applied voltages to V_{IX} which is nominally 10V. $\overline{CE}$ (pin 19) is raised to V_{IH}=5V, V_{CC} (pin 28) is raised from V_{CCV}=5V to programming voltage V_{CPP}=8.75V, followed by the selected output pin being applied with a rising voltage from V_{OH}=5V to V_{OPF}=17V. $\overline{CE}$ then receives a program pulse of V_{IX}=10V for a duration of between 0.3 and 0.5 milliseconds.

The verify voltages are V_{CCV}=5V, V_{OH}=5V and $\overline{CE}$ goes to V_{IL}=0V.

The input program sequence for blowing either In or $\bar{I}n$ fuses is very similar to that for output polarity, differing only in that the selected input is switched to V_{IH}=5V for blowing fuse In, or V_{IL}=0V for blowing fuse $\bar{I}n$ and the

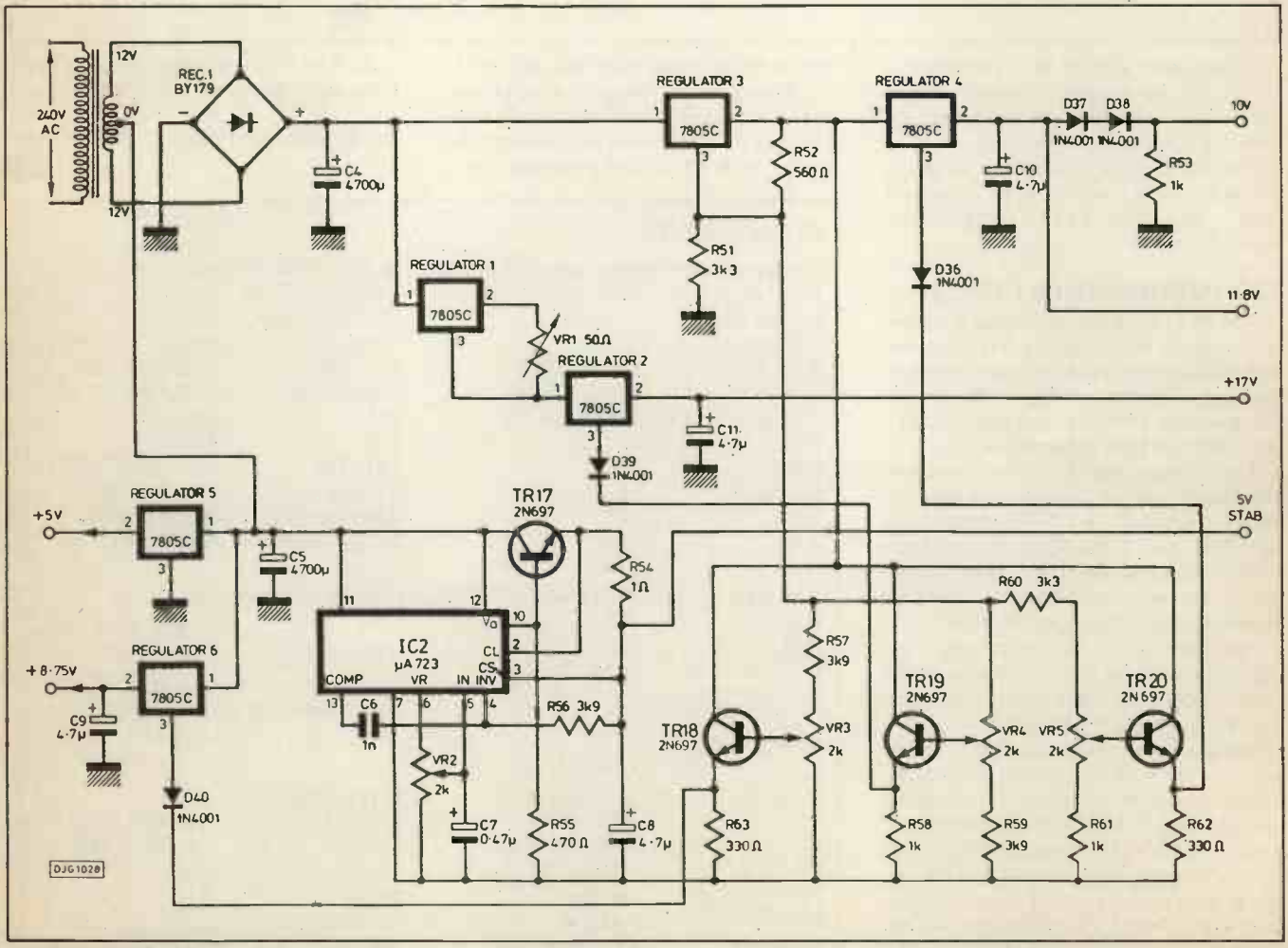

Fig.7 *Voltage regulation circuit.*

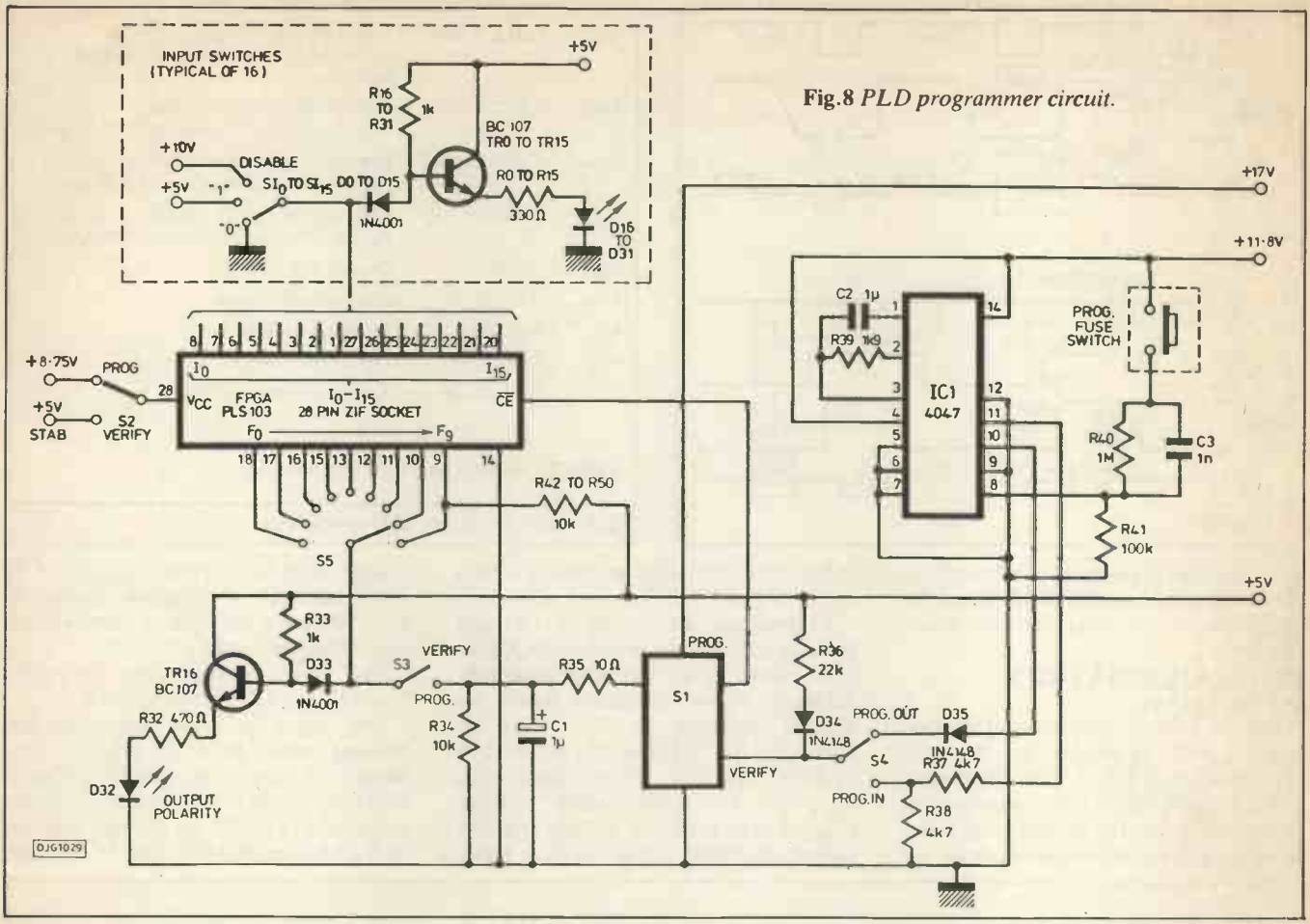

Fig.8 *PLD programmer circuit.*

program pulse applied to CE is from V_{IH} to V_{IL} for the required duration. Don't care states are then programmed by blowing both input fuses.

The input verify sequence requires reference to a truth table as described later in the PLD Programmer instructions.

THE PROGRAMMER CIRCUIT

The PLD Programmer circuit is shown in two parts for simplicity. Fig. 7 shows the voltage regulation and current limiting circuitry and Fig. 8 shows the programmer switches, led displays and the 'program fuse' pulse circuitry.

The voltage supply components form the biggest part of this circuit. Using six 7805C regulators, a µA723 operational amplifier and a number of transistor buffers, the required programming and verify voltages are realised. Table 2 shows all the voltage specifications.

Switches S1 to S4 are arranged to apply the voltages to the fpga pins in the correct sequence when the switches are operated in numerical order.

Switch S1 prepares $\overline{CE}$ (pin 19) for program or verify potentials. Switch S2 applies program voltage V_{CCP} or verify voltage V_{CCV} to V_{CC} (pin 28). Switch S3 applies +17V (when programming) to a selected output via rotary switch RS, or is left open circuit for the selected output potential to be verified. Switch S4 selects the 10V pulse path (applied through S1 to $\overline{CE}$) for programming outputs, or selects the 0V pulse path (also applied to $\overline{CE}$ through S1) for programming inputs.

The inputs I0 to I15 have individual switches to apply +10V for disabling the input, open circuit for programming a logic 1, or 0V for programming a logic 0. Each input has a transistor/led display.

TO BE CONTINUED NEXT MONTH

PE

COMPONENTS

Resistors 0.25W carbon except R0 to R15

R0 to R15	330 x 8 dil (2 OFF)
R16 to R31, R33, R53, R58, R61	1k (36 OFF)
R32, R55	470 (2 OFF)
R34, R42 to R50	10k (10 OFF)
R35	10
R36	22k
R37, R38	4k7 (2 OFF)
R39	1k5
R40	1M
R41	100k
R51, R60	3k3 (2 OFF)
R52	560
R54	1ohm
R56, R57, R59	3k9 (3 OFF)
R62, R63	330 (2 OFF)

CAPACITORS

C1	1µF 63V elect
C2	1µF 100V elect
C3	1nF
C4	4700µF 63V elect
C5	4700µF 25V elect
C6	1nF 100V
C7	0.047µF
C8 to C11	4.7µF 63V elect

SEMICONDUCTORS

D0 to D15, D33, D34, D37, D38, D39, D40	1N4001 (22 OFF)
D34, D35	1N4148 (2 OFF)
D16 to D32	CQX 51-5 (17 OFF)
IC1	4047
IC2	µA723
T0 to T16	BC107 (17 OFF)
T17 to T21	2N697 (5 OFF)
REG1 to REG6	7805 0.5 amp
Bridge rectifier	BY179

POTENTIOMETERS

VR1	50ohms multi-turn
VR2 to VR5	2k multi-turn

TRANSFORMER 12V + 12V 30VA toroidal

SWITCHES

SI0 to SI15	3 position break before make
S1	dpdt
S2, S4	spdt
S3	spst
RS	1-pole 9-way rotary

Free Reader Adverts

Searching for that elusive component?
Surplus equipment to sell?
Read the rules and fill in the form below to have your free ad published in PE BAZAAR.

Studio talkback system, rack mounted amplifiers, producers panel with microphone, remote speaker station £20. Buyer collects. Phone: 0908 564635.

Wanted: laser tubes 10MW or over, visible light, Neon, Argon etc. or info on possible source. Nicholas Butler, 47 Bannard Road, Maidenhead, Berks SL6 4NP.

Wanted: ZX81 interface for disk drive and parallel Centronics type for printer. Mr. Dussiot, 25 Rue de Chanteloup, 91180 St. Germain les Arpajon, France. Tel: (33)-1-60833812.

Wanted: circuit diagram or full info on voice synthesiser for use on car with interfacing. C J Jones, 187 Pullman Court, Steatham Hill, London SW2. Tel: 01-674 3365.

Wanted: Marconi TF1064 signal generator. Mr. A. Holmes Tel: 01-9778938 (Teddington)

Enterprise 64 Computer £30. Mr. A. Reekie Tel: (051) 531 7140.

Wanted: Original Microwriter with 8K RAM, Quinkey keyboard for BBC with interface and instructions. Mr. W. Denton, Path Cottage, High Wych, Sainbridgeworth Herts CM21 0JP.

IEEE-488 Interface for Commodore 64. Has anyone software for this item? ("Sys.1*"). Tel: (0232) 642687.

Wanted: Sony Betomax Video Model U30. Faulty video considered if timer O.K. Details to: W.H. Eakins, 96 Station Road, Portstewart, N. Ireland Co. Londonderry BT55 7HQ.

Onyx s-ware, h-ware WANTED. Please contact Nick Hacking 9A Bowmont Terrace, Glasgow G12 0LP. Tel: 041-339 1575.

Tektronix 317 Scope for sale. Has cal. output plus various input modes. £65 ono. Evenings tel: 01-809 1008. J. Baxter, 243 St. Ann's Road, London N15 5RG.

Telephone answering machine, SAISHO Twin Tam 1000 with remote control, new condition, £75, Ring Woking 72120.

Wanted info on: 3114 and 7496N I.C.'s and source of information. Reward. Please write to: Mr. A. Khan, 73 Park Road, Bolton, BL1 4RQ.

Oscilloscope cossor 1045K. Power supplies and tube ok but needs some work. With manual. £25 ono. Norman, 7 Gloucester Close, Fourmarks, Alton, Hants GU34 5HX Tel: 0420 63395.

Tech R.F. Signal Ge
Millivoltmeter £29.
Sweep Gen. £39.
Speedwell Close, Pak
Suffolk NR33 7DU. Te

Components. CPU's,
motors, IC's, all sorts,
cheap SAE for list. P
Firwood Avenu
Manchester M31 1PN

Stabilized power
amps, current limiter,
ideal for experime
Woking 72120.

BBC B, Z80 processo
40/80 dual drive, aut
software. Price £550 T
Garrigan, 137 Keogh
London E15.

Enterprise 128K and 64K, disc interface, all boxed, 64K model, brand new, £200 ono. Magazines, manuals. David R. Rocke, 107 Munro Road, Jordanhill, Glasgow G13 1SD, Scotland Tel: (041) 959 1460.

Two digiplan stepper motor drive cards type CD20 as new £70 each will split. Mr. G. Poole, 18 Well Orchard, Bamber Bridge, Preston, Tel: (0772) 314980.

Cumana graph pad exchange for 5 1/4" disc drive or anything useful. Tel: (0900) 3939. J.R. Wall, 1 Brierycroft, Stainburn, Workington, Cumbria CA14 1XJ.

I have a hoard of magazines, many titles, many years, and components for sale. Offers: K. Underdown, 17 Haven Gore, Basildon, Essex SS13 1JU.

For Sale: Midi extender 1 inp 3 buffered outs, or throughs £10. P/FREE R. Pearce, 8 Holly Oak Road, Southampton SO1 6GD. Tel: (0703) 788278.

Chess enthusiasts required who can help me with some electronic chess ideas I have. LCD especially. Bryan Whitby, 16 Manse Field Road, Kingsley, Warrington, Cheshire WA6

PE BAZAAR

Name & Address

PE PRACTICAL ELECTRONICS ARMCHAIR BOOK SHOP

INTRODUCING DIGITAL AUDIO
A non-mathematical introduction to the new digital technology.
Ian R. Sinclair. 112 pages. £5.95

PRACTICAL DIGITAL ELECTRONICS HANDBOOK
For enthusiasts, technicians and students. With nine constructional projects.
Mike Tooley. 208 pages. £6.95

PRACTICAL MIDI HANDBOOK
For musicians and electronic enthusiasts: a practical how-to book.
R.A. Penfold. 160 pages. £5.95

ELECTRONICS : BUILD AND LEARN
An introduction to electronics for the first timer. With constructional projects.
R.A. Penfold. 128 pages. £5.95

ELECTRONIC HOBBYISTS HANDBOOK
Provides a source of information that the amateur enthusiast is likely to need for day-to-day pursuance of hobby electronics
R.A. Penfold. 88 pages. £4.95 **Order code BP233.**

HOW TO GET YOUR ELECTRONIC PROJECTS WORKING
Essential reading for anyone who wants first-time success in project assembly.
R.A. Penfold. 81 pages. £2.50 **Order code BP110.**

ELECTRONIC SECURITY DEVICES
Full of ideas and examples for keeping your property safe.
R.A. Penfold. 102 pages. £2.50 **Order code BP56.**

ELECTRONIC MUSIC PROJECTS
24 Simple music projects for the creative musician.
R.A. Penfold. 106 pages. £2.50 **Order code BP74.**

MORE ADVANCED POWER SUPPLY PROJECTS
A companion book to BP76 and of interest to anyone who needs information on recent psu developments.
R.A. Penfold. 92 pages. £2.95 **Order code BP192.**

AN INTRODUCTION TO SATELLITE TELEVISION
Informative answers to many of the questions about the fast arriving communications revolution.
F.A. Wilson. 104 pages. £5.95 **Order code BP195.**

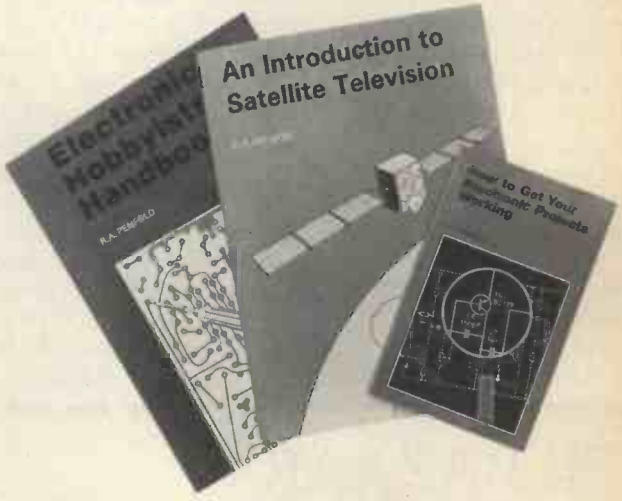

OSCILLOSCOPES (HOW TO USE THEM, HOW THEY WORK)
This second edition has been updated to cover new techniques and new instruments which have been introduced since the publication of the first edition in 1981. Illustrated with diagrams and photographs of many more oscilloscopes than the first edition, the book will appeal to everyone who wants to know about oscilloscopes, from the school student to the graduate, from the hobbyist to the technician.
Ian Hickman. 2nd Edition 1986.
£6.95 **Order code NT3.**

PRACTICAL ELECTRONIC BUILDING BLOCKS–BOOK 1
PRACTICAL ELECTRONIC BUILDING BLOCKS–BOOK 2
R.A. Penfold. Book 1 128 pages, Book 2 128 pages, £1.95 each
Order codes BP117, BP118.

STAN WILLETTS

DEPT: 33, 37, HIGH STREET, WEST BROMWICH, WEST MIDLANDS B70 6PB

Tel: 021-553 0186 559 1437 (night)

"REDIFFUSION" TRANSLATOR NO. 847038

8-way "Preomat"-T.V. tuning of band I, III & U.V.F. with AVC, Mains power supply 240V in plastic cabinet 14x7½x3½ inches. This translator may be used directly or modified to convert wired TV to normal use with MONITOR (IV P-P) TV sound, Tuner, (HI-FI), with any VGR. The Translators are guaranteed in perfect working order condition "A1" **£4.99 P&P £3.00,** Circuit & Modification instructions **£1.00** extra.

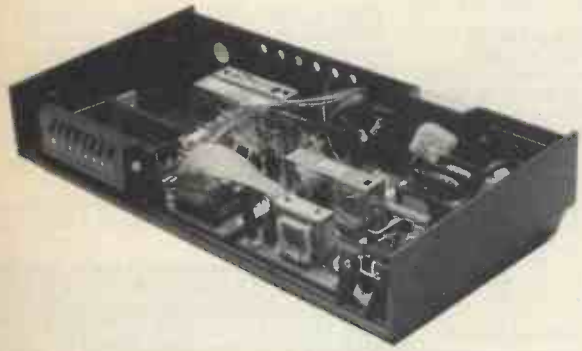

GRUNDIG INFRA-RED REMOTE-CONTROL VIF-K1

(13 function).
Consists of Transmittor TRV355 & Receiver VIF-K1 (suitable for use with GRUNDIG 2 x 4 Super & Stereo VIDEOS). These units are brand new & boxed complete with batteries **£4.99 P&P £2.00,** VIF-E1 Receiver only 10 for **£9.99 P&P £4.00.**

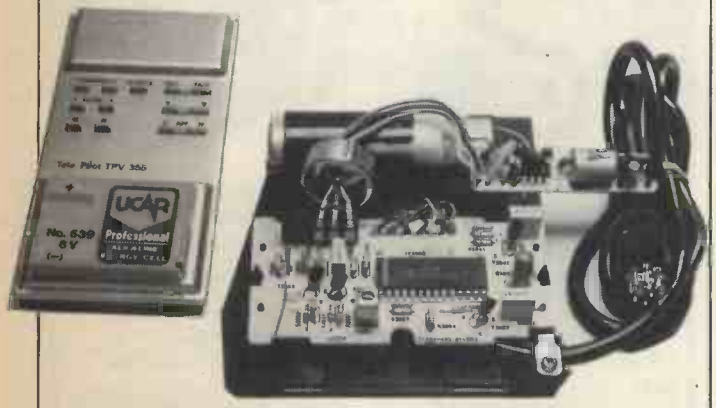

VIDEO HEAD CLEANER

Brand new with full instructions **£1.99** VHS or BETA **P&P £1.00.**

V2000 VIDEO TAPES

"MEMEREX" brand new & boxed VCC 360 **£6.99** VCC480 **£7.99 P&P £1.00.**

"VIDEOLAB" V H S VIDEO TAPES

E180 PREMIUM QUALITY which we recommended & guarantee one for one exchange **£1.99 P&P £1.00.**

VIDEO RECORDERS (BETA) SONY

C5 & C7, SANYO, Ect- **£39.00,** faulty machines **£15.00,** most types, VHS VIDEOS FROM **£75.00** working.

CB CONVERTER 40 CHANNEL, works in conjunction with

A/M 12 volt car radio, brand new & boxed **£2.50 P&P £1.00.**

THERMOMETER COMPASS CLOCK (digital), brand

new and boxed. **£2.50 P&P 75p.**

WIRELESS MICROPHONE

(electric condenser), range approx. 500ft. Brand new & boxed **£12.99 P&P 95p.**

REMOTE CONTROL for most TVs.

in stock, from **£15** (Sony, Ferguson, Grundig, Phillips, JVC, ITT). Please Ring.

VIDEO CAMERA monitor extention

leads (ten-pin) plug to socket, all contacts connected, 10 metres **£19.95 P&P £2.00.**

GRUNDIG 2 x 4 VIDEO HEADS

complete with head assembly **£29.00, P&P £3.50,** POWER PACK **£25.00 P&P £4.00,** 2 x 4 Super Panels **£5.99** = DFT + SERVO x VIDEO x CROMA · STERITON x METER BOARD x MODU · LATOP & TUNER **P&P £1.00.**

PLEASE NOT WE ARE INTERESTED IN PURCHASING ALL TYPES OR EQUIPMENT, ANY QUANTITY.

PROFESSIONAL SURVEILLANCE EQUIPMENT KITS

- **MTX** Micro-miniature VHF transmitter. The smallest kit on the market measuring market measuring an incredible 17mm × 17mm including on-board mic. Super sensitive. Fully tuneable over FM band. 9V operation with range up to 1000m. **£10.95**
- **VT500** High power version of the MTX with on-board PA stage providing 250mW of RF. Measures just 20mm × 40mm, power requirements 9-15V. Excellent sensitivity and stability. Fully tuneable over FM band. Ranges over 3000m can be expected. **£12.95**
- **VOX75** Voice-activated transmitter. Variable sensitivity trigger level switches transmitter on when sounds are detected. Stays on for time delay variable between 1-20 sec. Fully tuneable output covers all FM band. Very sensitive and low standby current through CMOS circuitry. 9V operation, range up to 1000m. Measures 30mm × 40mm. **£15.95**
- **CTX900** Sub-carrier scrambled transmitter. Audio is double modulated providing very secure transmissions. Any unauthorised listener will not be able to demodulate signal without DSX900 Decoder unit. Variable modulation on-board. Fully tuneable output covering FM band. 9V operation, range up to 1000m. Measures 30mm × 40mm. **£18.95**
- **DSX900** Decoder unit for CTX900. Connects to earphone output of receiver to descramble signal from CTX900. Monitor using small speaker or headphones. Variable decode frequency on-board for best resolution. 9-12V operation. Measures 35mm × 50mm. **£17.95**
- **TLX700** Micro size telephone transmitter. Connects onto line at any point and requires no batteries. Clearly transmits both sides of conversations on both incoming and outgoing calls. Undetectable by phone users. Fully tuneable output covering FM band. Range up to 1000m. Measures just 20mm × 20mm. **£9.95**
- **ATR2** Micro size telephone recording unit. Connects onto line at any point and connects into ANY normal cassette recorder, standard or micro having MIC and REM sockets. Requires no batteries. Switches recorder on silently when phone is used for incoming or outgoing calls, switches off when phone replaced. Clearly records both sides of conversations. Undetectable by phone users. Measures 10mm × 35mm. **£10.95**
- **XML900** RF Bug Detector/Locator. Wide band input circuitry detects presence of RF field and triggers flashing LED and piezo bleeper. Variable sensitivity enables source of transmission to be pinpointed to within 6 inches. Max sensitivity will detect MTX or similar transmitter at around 15-20 feet. 9V operation. Measures 55mm × 55mm. **£21.95**

All kits come fully documented with concise assembly and setting-up instructions high quality fibreglass PCB and all components necessary to complete the module. All prices are inclusive but please add £1.50 to cover P&P. Orders over £50.00 post free. Please state requirements clearly and enclose cheque or PO to cover.
Phone orders on ACCESS or AMEX accepted. Tel: 0827 714476.

NOTE: It is illegal to operate a transmitter in the UK without a licence

Send 9×4 S.A.E. for full catalogue of these and other surveillance kits.

SUMA DESIGNS, DEPT.PE, THE WORKSHOPS, 95 MAIN ROAD, BAXTERLEY, Nr. ATHERSTONE, WARKS CV9 2LE. TEL: 0827 714476

AMERICAN EXPRESS

TRANSFORMERS EX STOCK

12/24V or 12-0-12V
2 x 12V Secs Pri 240V

24V	12V	£	P&P
0.15	.03	3.13	1.70
0.25	.5	3.31	1.70
0.5	1	3.97	11.70
1	2	5.53	1.90
2 A	4	6.38	2.00
3 M	6	10.99	2.15
4 P	8	11.70	2.20
6 S	12	14.20	2.40
8	16	16.90	2.80
10	20	22.75	3.20
15	30	28.28	3.30
20	40	40.37	3.75
30	60	57.96	4.45
41	83	66.74	5.75

MAINS ISOLATORS
Pri 120V x 2 or 220/240V or 415/440V.Sec 440 or 240V or 110V Centre Tapped

20VA	£	P	2.28
60	7.58	P	2.45
100	12.37	&	2.65
200	14.43	P	3.20
250	20.45		3.30
500	24.73		3.85
1000	38.10		4.85
1500	69.10		5.95
2000	89.13		5.95
3000	107.24		O.A
6000	150.38		O.A

50/25V or 25-0-25V
2 x 25V Tapped Secs
Volts available: 5, 7, 8, 10, 13, 17, 20, 25, 33, 40, 50, 20-0-20, 25-0-25V

50V	25V	£	P&P
0.5	1	5.38	1.90
1 A	2	6.54	2.00
2 M	4	11.65	2.50
3 P	6	13.48	2.50
4 S	8	18.46	2.95
6	12	23.47	2.95
8	16	33.20	3.25
10	20	39.40	3.70
12	24	47.16	3.90

Stock items by return

30/15V or 15-0-15V
2 x 15V Tapped Secs
Volts available:3,4,5,6,8,9, 10,15,18,20,27,30V or 15.0V

30V	15V	£	P&P
0.5	1	4.14	1.65
1	2	5.63	1.80
2 A	4	9.10	2.00
3 M	6	10.55	2.20
4 P	8	12.59	2.30
5 S	10	16.11	2.40
6	12	17.65	2.65
8	16	23.59	2.75
10	20	27.22	2.95
12	24	30.39	3.05
15	30	34.03	3.65
20	40	46.46	5.95

AUTOS
105,115,220,230,140V
For step-up or down

80VA	£	P	1.75
150	9.12	&	1.90
250	11.14	P	2.10
500	17.32		2.80
1000	30.94		3.35
1500	36.73		3.80
2000	54.92		4.65
3000	93.39		5.75
4000	121.23		O/A
5000	141.17		O/A
7500	217.91		O/A
10kVA	257.49		O/A

CASED AUTOS
240V Cable I/Put, Inst: Input. 3-pin 115V USA Ski Outlet

20VA	£	P	1.85
80	8.96	P	1.95
150	12.17	&	2.35
250	15.77	P	3.25
500	19.21		3.25
1000	31.51		4.55
2000	44.23		5.58
3000	78.82		O/A

110V to 240V Cased Autos now available

60/30V or 30-0-30V
2 x 30V Tapped Secs
Volts available: 16,18,36,40, 60V or 24-0-24V or 30-0-30V

60V	30V	£	P&P
0.5	1	6.11	1.90
1 A	2	9.32	2.00
2 M	4	11.98	2.30
3 P	6	17.32	2.40
4 S	8	19.75	2.50
5	10	24.97	2.90
6	12	28.48	3.10
8	16	40.04	3.75
10	20	46.62	4.00
12	24	53.72	4.75

Also Valve Mains Output & Matching Transformers

INVERTERS
12/24V DC to 240V AC
Sine-wave or Square Wave

STAND BY, UPS SYSTEMS, AUTO-CHARGERS & MAINT-FREE BATTERIES

CONSTANT VOLTAGE Transformers for Spike-free Stable Mains

TRANSFORMERS WINDING SERVICE 3VA to 18KVA

AVO's & MEGGERS
Full range
TOROIDALS
Wound to Order

Send stamp for lists.

Please add 15% to all items after P&P

Unit 211,
Stratford Workshops
Burford Road, London
E15 2SP

BARRIE ELECTRONICS LTD
Tel: 01-555 0228 (3 lines)

Interak 1
BUILD YOUR OWN COMPUTER

INTERAK can be commenced with the minimum of outlay. Bare boards from £10.95; beg borrow or steal the components, or buy from us – all parts available separately. No special or custom chips (ie PALs. ULAs, ASICs etc) used – no secrets.

Go as fast or as slowly as your funds and enthusiasm permit.

Made for those who must know what goes inside. Full circuit diagrams and descriptions are provided. And honestly, can you really use a computer effectively if you don't know what's inside and nobody will tell you?

Solid engineering construction – something to be proud of. 19" 3U rack mounting, plug in circuit boards and modular construction keeps obsolescence at bay.

Flourishing Independent Users Group, and newsletter. Hundreds of programs on disk at little or no cost from the Users Group.

Program in machine code (Assembler), Basic, "C", Forth, etc Database, Word Processing, Scientific applications.

Cassette tape operation or disk (up to 4 drives, 1 Megabyte 3.5" available from us, but you can add 3", 5.25", 8" if you want). Disk operating system CP/M Plus.

64K RAM, Z80 based at present with potential for expansion to a 16 Megabytes address space and Zilog's latest Z80280 in the future.

Needs no specialised knowledge to construct, and we will happily get you out of a jam if you get into one.

Availability of personal and individual after sales service, impossible to obtain from large companies, who are only after your money.

Security of supply – from Greenbank Electronics, established in 1970.

Greenbank

For more details write or phone us:
Greenbank Electronics, Dept (E10P), 460 New Chester Road, Rock Ferry, Birkenhead, Merseyside. L42 2AE. Tel: 051-645 3391.

TWO GREAT HOBBIES

ONLY £124.50 INC VAT

...IN ONE GREAT KIT!

The K5000 Metal Detector Kit combines the challenge of DIY Electronics assembly with the reward and excitement of discovering Britain's buried past.

THE KIT – simplified assembly techniques require little technical knowledge and no complex electronic test equipment. All stages of assembly covered in a detailed 36 page manual.

THE DETECTOR – features Analytical Discrimination & Ground Exclusion, backed by the proven pedigree of C-Scope, Europe's leading detector manufacturer.

Ask at your local Hobby/Electronics shop or contact:–

C-SCOPE

C-Scope International Ltd., Dept. PE Wotton Road, Ashford, Kent TN23 2LN. Telephone: 0233 629181.

THE LISTENING MACHINE

BY TOM IVALL

SPEAK SLOWER, MASTER

Speech recognition machines are not yet developed enough to write a letter, but they do fine for checking pigs.

Consider the two phrases: "A tax on shipping" and "Attacks on shipping". They mean different things, but when spoken out loud at normal conversational speed they sound the same.

This is one of the characteristic problems facing researchers in electronic speech recognition. How can an automatic listening machine distinguish between such ambiguous streams of sound? The answer certainly doesn't lie in electronic processing of the initial audio signals. Somehow the machine must be given more than just the power to recognise sounds. It must be able to *understand* speech, at least to a limited extent.

Brian Oakley, the retiring director of the UK's Alvey Programme on information technonlogy, drew attention to this problem in a valedictory survey of what Alvey had achieved. He said he would reduce r&d effort on signal processing but increase it on natural language processing.

The Alvey scheme ended its five-year run this year and is now being replaced by another national, collaborative r&d programme in information technology. Continuing Alvey projects, plus ideas for new work recently invited by the Government, are to be supervised by a new body called the Information Engineering Directorate. This is controlled and funded by the Department of Trade & Industry and the Science & Engineering Research Council. The IED national programme will concentrate on three main areas of work – vlsi, systems architecture and systems engineering. Speech recognition r&d will come into the system architecture area.

But the fact that speech recognition is still being researched doesn't mean that it hasn't already produced some practical results. By working within its present limitations, such as the one mentioned above, we can still make use of it in a modest kind of way.

A number of banks, for example, are trying out speech recognition as a possible way of handling simple, routine telephone enquiries from customers about their accounts. In the UK the National Westminster Bank and the Royal Bank of Scotland are among the pioneers. In Japan some banks have been providing this kind of service for five years or more.

In industry the technique is beginning to be used in certain situations where workers have to continuously provide information on the tasks they're performing but can't punch keyboards etc, as their hands are fully occupied. Here the procedure is called voice data entry. In general it has applications where entering data by manual methods would be difficult or inconvenient or would slow the operative's work to an unacceptable level of productivity.

Another situation is where the worker has to move about a lot in the course of the job. Using a headset type of microphone – connected by a long flexible cable or portable radio link to the speech recognizer – avoids having to keep going back to a computer terminal or other hand-operated data input device.

So far the industrial tasks catered for seem to be mainly in quality control, inspection, sorting, stock control and the checking and logging of incoming goods. In the USA, for example, the glass manufacturer Owens Illinois uses voice data entry in quality control of glass faceplates for television tubes. General Electric has found it useful for the recording of incoming replacement components at their New Concord distribution centre for appliance parts.

In Japan a meat auctioning firm called Gunma Meat Wholesale Market has installed a system to allow operatives to handle, examine and simultaneously describe hanging carcases of pigs and cattle. The Japan Publication States Company, a books distribution agent, uses the techinque for sorting about 180,000 books a day according to destination. All these users justify the cost of the electronic equipment by the savings in time, labour and paperwork relative to previous methods of working.

How has this sort of progress been achieved? Mainly by scaling down the performance that you are asking the speech recognition system to deliver. By deliberately applying operational constraints, the development engineer can make the technology simpler, more reliable in operation and cheaper to manufacture.

For example, if you ask the user to introduce short pauses between the words spoken in a phrase – say about a quarter of a second – it relieves the listening machine from having to pick out these individual words from the sound stream. So speech recognizers working on isolated words become simpler and cheaper than machines for continuous speech. Natural speech, of course, tends to run all the words together into an unbroken stream. But when only a few words have to be spoken at a time, as in the voice data entry systems mentioned above, it's not putting too much of a strain on the factory worker to introduce the short pauses.

Practical speech recognisers are anything from single printed circuit boards, which can be plugged into personal computers or other electronic equipment, to desk-top or floor-standing units housed in their own cabinets. Most of them work on the automatic recognition of whole words or short groups of words as units of meaning – as distinct from, say, phonemes.

Their basic principle of operation is to compare an input acoustic pattern – the spoken utterance – against an already stored set of reference acoustic patterns. This means, of course, that at some point the device has to be given the necessary set of reference patterns to form its 'vocabulary'. If the manufacturer does this, the machine is called a speaker-independent recognizer. But if the user does it, in a setting-up process called training, the device is classed as speaker-dependent.

Voice data entry doesn't usually need a very large vocabulary. Up to about 100 words is probably enough for most industrial applications. This makes voice data entry a much simpler technique than the so-called speech-to-text systems for office automation, which may well need vocabularies of 5000 words or more. So, by being allowed to limit the size of the vocabulary, the manufacturer can simplify and reduce the cost of the equipment. PE

FULL-TIME TRAINING COURSES

2 YEAR
BTEC NATIONAL DIPLOMA
Electronics and
Communications
Engineering
(TV, *Computers, Programming, IT*)

1 YEAR
BTEC NATIONAL CERTIFICATE
1. Electronic Equipment Servicing
(TV, Video, CCTV)
2. Computing Technology
(Microprocessors, DataComms, Interfacing)
3. Information Technology
(Telecomms, Satelite TV, CD, Networks)
4. Software Engineering
(Assembler, BASIC, PASCAL, CADCAM)

COURSES COMMENCE
Monday 19th Sept. 1988

LONDON ELECTRONICS COLLEGE
Dep: AA, 20 Penywern Road,
London SW5 9SU. Tel: 01-373 8721

PRACTICAL ELECTRONICS CLASSIFIED

Reach thousands of serious electronic and computer enthusiasts. Advertise in PE Classified pages: Rates 20p per word or £8.50 per single column cm (plus VAT). Send your advertisement with your remittance to **PE, Intra House, 193 Uxbridge Road, London W12 9RA. Tel: 01-743 8888.**

LET PE WORK FOR YOU!

MULTIPLE OUTPUT POWER SUPPLY
FIXED VOLTAGE DC SUPPLY PROVIDING +5V (750mA), +12V (200mA), -12V (200mA)
EUROCARD SIZED PCB FEATURING OVERLOAD AND SHORT CIRCUIT PROTECTION PLUS MAINS ON LED INDICATOR.
RIPPLE AT FULL LOAD TYPICALLY:
3mV (+5V)) AND 20mV (+/-12V).
INPUT VOLTAGE 240V AC 50Hz.
PRICE £20 plus £1.20 p&p.
FERNLEA CABLE ASSEMBLIES,
THE WYND, MILTON OF BALGONIE,
FIFE, SCOTLAND. KY7 6PY.

ESR ELECTRONIC COMPONENTS
- *Velleman Electronic Kits*
- *Test Equipment & Tools*
- *Instrument Cases*
- *New 1988 catalogue £1.85 inc p&p*

(Mon-Sat. 9.30-5.30 Closed Thurs)
Station Road, Cullercoats, North Shields, Tyne & Wear NE30 4PQ. Tel. 091 251 4363

SURPLUS/REDUNDANT ELECTRONIC COMPONENTS WANTED
I/Cs – Tuners – Transistors – Valves – Diodes etc. any quantity considered – immediate payment.
ADM ELECTRONIC SUPPLIES
Tel: 0827 873311 Fax: 0827 874835

Resistors 1/4 W 5% carbon (E12) 1p metal film 1% (E24)3p
Resistor Pack 85 different E12 values + zero ohm link total contents 1000 resistors £8.95
LEDs red/green 3/5mm 6p each. Yellow 11p
Cable ties 75mm 1p each £5.95/1,000 £49.50/10,000
Power transistors TIP35C (NPN), TIP36C (PNP) 100v 25A TOP3 plastic case £1.56ea
100dB piezo buzzer £1.50 standard buzzer £0.80
Solar cells 0.45v 100mA £1.48 700mA £3.50
Stepping motor 4 phase 12v 7.5 step 50 ohms £8.95
SAA1027 stepping motor driver chip £3.95
Miniature FM transmitter Kit 100-108 Mhz high quality sound Ideal for cordless microphones or guitars etc £7.48
Metal latching XLR line plug £1.35 line socket £1.48
Ferric chloride pack for mixing with 1/2L water £1.40
Automatic squeeze action wire strippers £3.45
Special offers Limited Stock
Computer Grade Capacitors with screw terminals
58000uf 60v £4.00 4700uf 63v £1.50
38000uf 20v £1.95 87000uf 10v £1.50
Stereo LW/MW/FM Tuner pre-amp assembly complete with volume/tone controls and tuning scale
Brand new in makers carton £5.95, faulty £1.95
Circuit diagram description and setting up procedure for tuner assembly described above £0.50
LCD display 16 digit 7x5 dots dot matrix £2.50
CMOS TTL 74HC 74F Linear transistors kits capacitors resistors tools etc always in stock
Please add 75p P&P per order VAT included
JPG Electronics 276 Chatsworth Road Chesterfield S40 2BH
Access orders (0246) 211202. Callers welcome

Omicron 2
The practical surveillance solution

- ❑ *Ideal eavesdropper or baby monitor*
- ❑ *Less than ½ matchbox size*
- ❑ *Absolutely shockproof housing*
- ❑ *Built-in sensitive microphone*
- ❑ *Battery life 72 hrs (Alkaline)*
- ❑ *Full 12 months warranty*

Simply clip Omicron 2 to battery and hide - no adjustments, no fiddling, no fuss. Hear every sound perfectly on an ordinary FM radio up to 1/4 mile away. This must be the easiest to use, best value surveillance device available.
No quibble 14 day money back guarantee.
TRADE ENQUIRIES WELCOME **MILLEA ELECTRONICS** 470-472 LEYMOOR ROAD, HUDDERSFIELD, HD7 4QF. *Tel: (0484) 460103*

Carbon Film Resistors ¼W E24 series 0·51R to10M0 – 1p
100 off per value – 75p 1000 off In even hundreds per value – £7
Metal Film ¼W 10R0 to 1M0 5% E12 series – 2p 1% E24 series – 3p
½Watt metal/carbon film E24 series 1R0 to 10M0 – 1½p
1 Watt metal/carbon film E12 series 4R7 to 10M0 – 5p
BC107/8/9 – 12p BC547/8/9 – 8p BC182L 184L – 10p
BFY50/51/52 – 20p 2N3055 – 50p TIP31A,32A – 25p TIP,41,42, – 40p

Tantalum head subminiature electrolytics (Mids/Volts)
0·1/35, 0·22/35, 0·47/35, 3·3/16, 4·7/16 – 14p 4·7/35 – 15p
2·2/35, 4·7/25, 10/5 – 15p 4·7/35, 6/8/16 – 16p 10/16,22/6 – 20p
22/16 – 30p 33/10 – 30p 47/10 – 35p 100/6 – 40p

Aluminium Electrolytics (Mids/Volts)
1/50, 2·2/50, 4·7/25, 4·7/50, 10/16, 10/25, 10/50 – 5p 22/16, 22/25 – 6p
22/50, 47/16, 47/25, 47/50 – 6p 100/16, 100/25 – 7p 100/50 – 12p
100/100 – 14p 220/16 – 8p 220/25, 220/50 – 10p 470/16, 470/25 – 11p
1000/25 – 18p 1000/35, 220/25 – 22p 4700/25 – 70p

Miniature Polyester Capacitors 250V Wkg. Vertical Mounting
·01, ·015, ·022, ·033, ·047, ·068 – 4p 0·1 – 5p 0·15, ·22 – 6p 0·47 – 8p

Mylar Capacitors 100V Wkg. Vertical Mounting E12 Series
1000p to 8200p – 3p ·01 to ·068 – 4p 0·1 – 5p 0·15, 0·22 – 6p

Subminiature Ceramic Plate 100V Wkg. E12 Series Vertical Mounting
2% 1P8 to 47P – 3p 56P to 330P – 4p 10% 390P to 4700P – 4p
Ceramic plate/disc E6 Series 50V 22P to .047 – 2p

Polystyrene Capacitors 63V Wkg. E12 Series Axial Mounting
10P to 820P – 3p 1000P to 10,000 – 4p 12,000P – 5p
1N4148 – 2p 1N4002 – 4p 1N5404 – 14p W01 bridge – 25p
0A91 – 6p AA143 – 8p W005 – 20p 1N4006 – 6p
Zener diodes E24 series 3V3 to 33V 400mW – 8p 1 watt – 12p
L.E.D's Red, Green & Yellow 3mm & 5mm – 10p 8mm – 35p
20mm fuse 0·1A to 5A quick blow – 5p Anti Surge – 8p
High Speed drills 0·8mm, 1·0mm, 1·3mm, 1·5mm, 2mm – 30p
Expo Reliant drilling machines 12V d.c. with improved 3-jaw chuck 6.50
Nicads AA – 80p HP11 – £2 PP3 – £4.20 Universal Chargers – £6.50
Glass reed switches single pole make contacts – 8p Magnets – 12p

VAT inclusive. Return postage 20p (free over £5). Lists free.
THE C.R. SUPPLY CO.,
127 Chesterfield Road,
Sheffield S8 ORN. Tel. 557771.

L.F. HANNEY
77 Lower Bristol Road, Bath, Avon.
Tel: 0225-24811
Your electronic component specialist for Avon, Wilts. & Somerset
Closed Thursdays

COMPONENT KITS RESISTORS, CAPACITORS, FUSES, DIODES ETC
Save time, trouble and expense on that project by having the components you require to hand.
Our kits are ideal for the Development Lab, service engineer, Repair Shop, Tech College and hobbiest alike. The components supplied in our kits are new and to full specification. They come individually packed in handy re-usable plastic tubes, all contained within a storage unit.
RESISTORS 1/4w C.F. 5%
KIT 25E12-20 12R-1MEG (60 values, 20 of ea.) 1200 = £12.00
KIT 25E24-20 12R-1MEG (120 values, 20 of ea.) 2400 = £21.00
Replacement tubes complete with Resistors 25p ea.
RESISTORS 1/2w C.F. 5%
KIT 50E12-10 12R-1MEG (60 values 10 of ea.) 600 = £13.75
Replacement tubes complete with Res. 25p ea.
RESISTOR TWIN KIT 1/4w and 1/2w C.F.
KIT 25E12-20 12R-1MEG (60 values, 20 of ea.) = 1200
KIT 50E12-10 12R-1MEG (60 values, 10 of ea.) = 600 £25.00
FUSE KIT 20 x 5mm. 25-10amp SB & QB 10 of ea. (300) = £26.50
ZENER DIODE KIT
400mW KIT Z12-10 2.7-V 10 of ea. (150) = £12.00
1.3w KIT Z12-10 2.7-27V 10 of ea. (150) = £19.00
ZENER TWIN KIT
KIT Z12-TWIN-10 2.7-27V 10 of ea. (300) = £30.00
DIODE KIT
400mA IN4148 (200) 1Amp4002,4007 (50 ea)
3amp 5401,5408 (25 ea) Total 350 = £12.00
Any kit can be put together, if you or your company have a requirement for special or mixed kits we will be happy to quote. Please send s.a.e for full component and product list. Please add 50p P&P and 15% VAT to all orders. MAIL ORDER ONLY.
A.D.A.M. Electronics
P.O. Box 24, Church Crookham, Aldershot
GU13 0DH Tel 0252-617193

TURN YOUR SURPLUS
ICS transistors etc into cash, immediate settlement. WE also welcome the opportunity to quote for complete factory clearance. Contact:
COLES-HARDING & CO.
103 South Brink, Wisbech, Cambs.
ESTABLISHED 15 YEARS
Tel: 0945 584188
Fax: 0945 588844

OMNI ELECTRONICS
stock a wide range of electronic components at
174 Dalkeith Road
Edinburgh EH 16 5DX
Tel: 031 667 2611
Open Mon-Fri 9am-6pm
Sat. 9am-5pm
Send 2x18p stamps for NEW CATALOGUE!

FOR SALE

256K - 120nS	DRAMS	£4.50	EX-EQUIPMENT
64K - 150nS	DRAMS	£1.00	EX-EQUIPMENT
64K - 200nS	DRAMS	£0.60	EX-EQUIPMENT
16K - 2/3/4	DRAMS	£0.20	EX-EQUIPMENT
64K - 120nS	DRAMS	£2.00	BRAND NEW

ALSO EPROMS 8/16/32/64 EX-EQUIPMENT 8080, 8086, 8088, Z80 CPU's & SUPPORT CHIPS

APRICOT PORTABLE NO MANUALS OR S/WARE	£190
GRIDCASE 2 PORTABLE NO MANUALS OR S/WARE	£600
ZENITH Z100 AND Z151 MICROS FOR SPARES.	CAU.
14 x 59/55 COME PRINTERS (USED):	CALL
100 X TDX VDUS COLOUR & MONO. BRAND NEW.	CALL

MINIMUM ORDER £50. VAT AND CARRIAGE EXTRA.

C.S.S. LTD., READING 0734-341835.

DEANSGATE ELECTRONICS

We stock a large range of electronic components, test equipment,telephone accessories, computer accessories, microphones, speakers, discolighting, mixers, meters, stylus, so call in and have a look around.

263 Deansgate, Manchester
Telephone: 061-834 1185

CALIBRATION

Need not cost a fortune. For a free quote on your D.M.M., oscilloscope or frequency counter. Send type of instrument, Make and Model details to:-

3 1/2 DIGIT D.M.M. FROM £5.00 (calibrator to BS5750)

Calibration Lab, Blueharrow Limited, Brookside Cottage, Main Road, Brighstone, I.O.W. PO30 4DJ
Tel: 0983 740845

HAVE YOUR ELECTRONIC IDEAS BECOME A REALITY! LET HIGHLAND ITEC DEVELOP and MANUFACTURE your circuits at a low cost for Proto-Type and Small Production runs with comprehensive documentation which includes: Silk Screen Layouts, Photo-Artworks, Pad-Masters, Solder-Masks, Bill of Parts. Manufacture includes: sizes up to 300x200 mm Single or Double-Sided. FINISH: Roller-tinned and drilled. For more details: Tel: (0463) 226505 or FAX (0463) 226506.

SPECIAL OFFERS

Cassette Motor large and small. 2 for £1.00
Mono and stereo cassette heads 2 for £1.00
Auto-Reverse heads £2.00 each. Small speakers 2 for £1.50.
Microphone small for cass. tel. etc. 2 for £1.00
Pease add 75p p&p. VAT inc.Access card accepted. **Golden Orange Supplies, Brockhollands Road, Woodside, Bream, Lydney Glos.. Tel: 0594-563009.**

SERVICES

PCB Services. PCBs draughted on Autocad. We will make drilled PCBs to your specifications. 1 offs to small production runs. Send your Artwork or circuit diagrams. Cost 12p/cm² double sided, 2p/cm² for Artwork production. For further details contact **Tommy Knight, Production Dept., Intec (Inverclyde) Ltd, 5 East Blackhall Street, Greenock PA15 1HD.**

HEATHKIT U.K. Spares and service centre. **Cedar Electronics, Unit 12, Station Drive, Bredon, Tewkesbury, Glos. Tel (0684) 73127**

MISCELLANEOUS

VHF MICROTRANSMITTER KIT, tuneable 88-115 MHZ, 500 metre range, sensitive electret microphone, size 25mm x 20mm. SPECIAL OFFER complete kit ONLY £3.95 POST FREE. Access orders telephone 021 411 1821 (24 hrs), cheques/P.O's to: **Quantek Electronics Ltd., (Dept PE), 45a Station Road, Northfield, Birmingham B31 3TE.**

Video senders £14.90. Aerial boosters £9.70. S.A.E. for leaflets. **Electronic Mail Order, Ramsbotham, Lancs. BL0 9AG**

Back editions of Practical Electronics 1968-1980 in good condition. No decent offer refused. Tel: 0509 412508 evenings or weekends.

D.O.S. TRAINING XT/AT and Amstrad Compatibles. Works on any 5 1/4 floppy or/and hard drive combination. Disks and textbooks £18.00 + £1.25 p&p. ALSO Floppy Disks, 5 1/4 premium guaranteed quality. Double sided, double density for XT - £6.00 for 10. Above disks include Box, Labels, Sleeves, Tabs. Guaranteed. Bulk F.D. 5 1/4 DS/DD disks only at £5.00 for 10. Add p&p 65p per 10 disks Cheques or money orders to: **Shipman Company, Technical Training Centre, 3 Wilford Grove SKEGNESS, Lincs, PE25 3EZ.**

PSSSST!!!! 16 Plans for 007-style bugging, tracking, and telephone transmitters £3.00. NEW!! World's cheapest radio!! Easily constructed from old razorblade, paperclips etc. Never needs batteries. Instructions/plans £2.50. BOTH FOR £5.00. Cheque/P.O.:- Mr. C.Boosey, 24 Summerfield Road, Shiphay, Torquay, TQ2 7DL.

Fire alarm, sensor switches, three £5. W-K LCR bridge, chart recorder, voltage standard, geiger counter £69 each. 60W IC amplifiers £6.50. Blue Steel missile sections 10 for £50 (collectors). 040-376236.

Plastic cases or special shapes made to order. SAE for details. **IMPEX Products, 59 Fakenham Way , Owlsmoor, Camberley, Surrey GU15 4YS**

'Surveillance devices, lasers, testla coils, scramblers, ultrasonic and many more, over 150 designs send sae to **Plancentre, Old Wharf, Dynock Road, Ledbury HR8 2HS**

CLEARANCE SALE of components, transistors capacitors, potentiometers transformers etc. Send large S.A.E for free list. **M. Dziubas, 158 Bradshawgate, Bolton, Lancs.**

Back issues of Practical Electronics are still available! U.K. price £1.50, overseas £2.00 from Practical Electronics, Intra House, 193 Uxbridge Road, London W12 9RA.

Interested in Astronomy? Then for telescopes, binoculars etc. come to Broadhurst Clarkson & Fuller, Telescope House, 63 Farringdon Road, London, EC1M 3JB. Tel: 01-405-2156. **We have 203 years behind us - we are light years ahead.**

Electronics: Build and Learn.by well-known author R. A. Penfold. Price £5.95 - Published by PC Publishing. Available from all good bookshops or PE Book Service.

PE SERVICES

BACK NUMBERS
(Subject to availability)

UK	OVERSEAS
£1.50	£2.00

PHOTOCOPIES
(Price per article, per issue)

UK	OVERSEAS
£1.00	£1.50

BINDERS
(Each holds 12 Issues)

UK	OVERSEAS
£5.95	£7.95

Prices include post and packaging

Phone

Claire Hanson with your classified ad.!

01-743 8888.

We now accept payment by Access and Visa

DON'T MISS A VITAL COPY!

Ever been in the middle of a project only to find the next issue sold out? An annual subscription to **PRACTICAL ELECTRONICS** solves the problem. Wherever you live you'll receive a copy regularly each month. It's the quick, pratical way to solve the delivery problems.

COMPLETE AND POST THIS ORDER FORM TODAY!

You may send a photocopy of this form.

PRACTICAL
ELECTRONICS
SUBSCRIPTION ORDER FORM

Annual Subscription Rates	
U.K.	£15.00
Overseas	£18.00
Students: Deduct £1 and quote Student Number	

Complete this form and post it, with payment to : **Practical Electronics** Subscriptions Dept. PO Box 500 Leicester LE99 0AA

POST COPIES TO

NAME _____

ADDRESS _____

_____

_____ POST CODE _____

I enclose my cheque/PO payable to Intra Press for £ .....

Please Note: Subscriptions cannot be ordered by phone

Signature _____

READY-MADE P.C. BOARDS

Simplify your project assembly – use a ready-made printed circuit board. All are fully drilled and roller tinned. Just slot in the components as shown in the project texts, and solder them. **PCBs are the professional route to project perfection.**

MAIL ORDERING

Select the boards you want, and send your order to
PE PCB SERVICE, PRACTICAL ELECTRONICS,
193 UXBRIDGE ROAD, LONDON W12 9RA.

Prices include VAT and postage and packing. Add £2 per board for overseas airmail. Cheques should be crossed and made payable to **Intra Press.**

Quote the project name and PCB Code Number, and **print your name and address in Block Capitals.** Do not send any other correspondence with your order.

TELEPHONE ORDERS (OPEN 24 HOURS)

Use your Access card and phone your order to

0268 289923

clearly stating your name and address, card number, and order details.

All orders receive priority attention, but allow 28 days for delivery in case a PCB is temporarily out of stock.

WE CAN ONLY SUPPLY THE PCBS LISTED HERE
CHECK LATEST ISSUE FOR PRICES BEFORE ORDERING

PHOTOCOPIES OF THE TEXTS MAY BE BOUGHT FROM THE EDITORIAL OFFICE AT £1.00 EACH PART (£1.50 OVERSEAS), P&P INCLUSIVE.
COMPONENTS ARE AVAILABLE FROM ADVERTISERS.

JUN 86		
GUITAR TRACKER – transforms a guitar for sound synthesis.	111	£6.98
THERMOCOUPLE INTERFACE – transforms a DVM into a thermometer.	112	£3.90
BBC LIGHT PEN – inhibiting, enhancing and visual feedback.	114	£3.90
JULY 86		
PASSIVE IR DETECTOR – burglar detection	115	£3.90
200MHZ COUNTER – professional specification	00D	£30.88
SEP 86		
FIBRE-OPTIC LINK – computer comms.	ODE	£10.14
OCT 86		
DRUM SYNTHESISER – variable dynamic sound triggered effects.	121	£7.67
MAINS DELAY TIMER – selectable 15 to 120 mins. Set of 2 PCBs.	122	£7.92
MAINS DIMMER – touch control up to 400W.	123	£3.90
NOV 86		
REMOTE JOYSTICK – infrared computer controller. Set of 2 PCBs.	124	£10.86
BABY ALARM – through-the-mains transceiver.	125	£10.71
DEC 86		
VIDEO ENHANCER – manually adjustable video improvement.	126	£8.76
JAN 87		
VIDEO FADER – simple inexpensive video mixer	127	£4.50
VOICE SCRAMBLER – confidential trans.	128	£8.06
FEB 87		
HI STAB – good variable workshop PSU	132	£8.79
MAR 87		
4 CHANNEL ENHANCER	135	£4.60
LIGHT PEN – uses fibre optics for accuracy	136	£4.10
ULTRASONIC TAPE MEASURE	138	£9.50

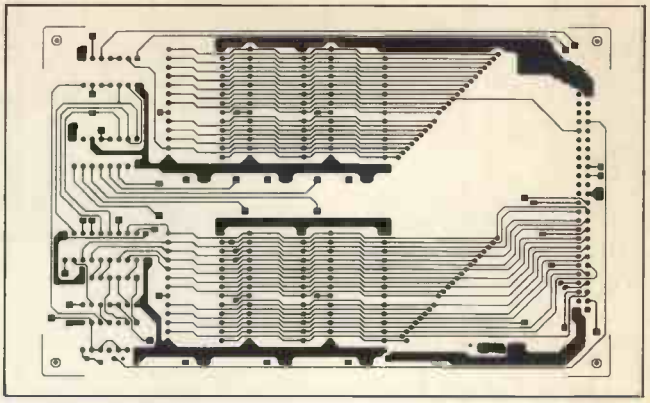

APR 87		
VIGILANTE CAR ALARM – keeps cars alert	139	£5.90
INDUCTIVE LOOP TRANSCEIVER – remote control for models:	143/144	£7.80
MAY 87		
BRIGHT FUZZ – Foot operated overdrive	145	£3.90
JUN 87		
AUDIO SIGNAL GENERATOR	146	£10.20
JUL 87		
WORD GENERATOR – 16-bit binary words	147	£13.42
SCOPE STORE oscilloscope add-on data storage	148	£11.94
SEP 87		
SPEECH PROCESSOR – clarifies speech	150	£5.86
GCSE TIMER UNIT – versatile variable delay A WD and switching	151	£5.18
FUNGEN – triple waveform signal generator	152/153	£9.69
LIGHT CONTROLLER – delayed switching	154	£4.64
OCT 87		
TEACHER LOCKER – digital lock control	155	£7.50
POWER SUPPLY – stabilised ±15V	156	£7.50
GUITAR TO SYNTH – music interface	157A/B	£9.95
NOV 87		
DUAL POWER SUPPLY – GCSE	158	£6.20
MIDI EXPANDER – Music Interface	159	£5.04
DEC 87		
RS 232C TO MIDI	160	£6.43
TEACHER RADIO– GCSE	161	£5.58
JAN 88		
EGG TIMER	162A-C	£12.44
LEGO BUGGY DRIVER	163	£6.42
FEB 88		
TEACHER TALKBACK – GCSE	164	£6.36
DC MOTOR SERVO	165	£7.53
MAR 88		
APPLIANCE TIMER	166A/B	£9.38
TEACHER LIGHTSHOW – GCSE	167A	£3.99
	167B	£5.10
LOGIC ANALYSER – Double-sided	168	£20.65
APR 88		
LIGHT METAL EFFECTS	169	£7.10
TEACHER COUNTER	170	£4.95
	171	£4.92
MAY 88		
RF SPEECH PROCESSOR	172	£6.26
JUN 88		
AMSTRAD ROM EXPANSION	173	£10.80
MAINS MODEM	174	£4.27
JULY 88		
VOCALS ELIMINATOR	175	£4.31
AUGUST 88		
SPEAKING CLOCK	176	£10.50
SEPT 88		
BBC MULTIPLEXER	177	£4.50
OCT 88		
METAL DETECTOR	178	£6.50

HOW TO USE PCB TRACK PATTERNS

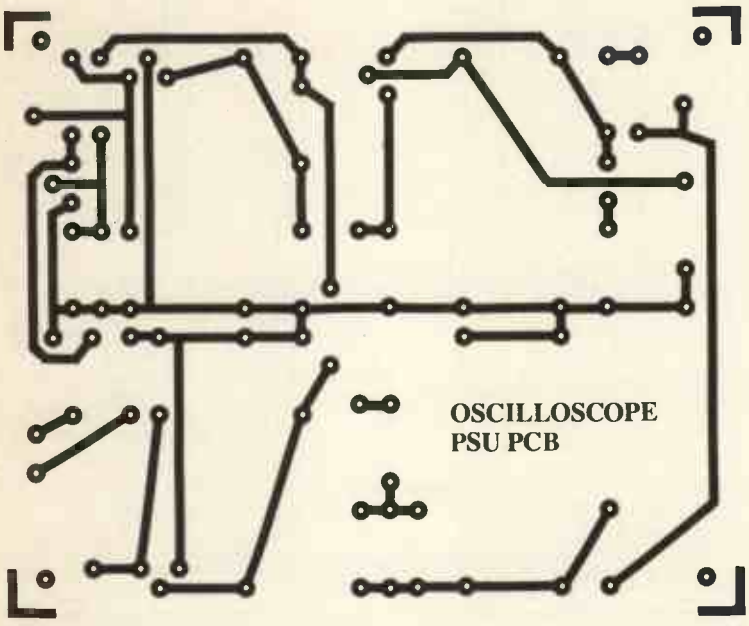

ISODRAFT METHOD

Have a normal photocopy made, ensuring good dense black image. Spray ISOdraft Transparentiser onto copy in accordance with supplied instructions. **ISOdraft** is available from **Cannon & Wrin,** 68 High Street, Chislehurst, Kent. Tel: 01-467 0935.

NEXT PRINT ONTO PCB

Place positive transparency onto photosensitised copper clad fibre glass, cover with glass to ensure full contact. Expose to Ultraviolet light for several minutes (experiment to find correct time – depends on UV intensity).

Develop PCB in Sodium Hydroxide (available from chemists) until clean track image is seen, wash in warm running water. Etch in hot Ferric Chloride, frequently withdrawing PCB to allow exposure to air. Wash PCB in running water, dry, and drill holes, normally using a 1mm drill bit.

(PCB materials and chemicals are available from several sources – study advertisements.)

*** CAUTION – ENSURE THAT UV LIGHT DOES NOT SHINE INTO YOUR EYES. PROTECT HANDS WITH RUBBER GLOVES WHEN USING CHEMICALS.**

COMOS

4000	13p	4082	13p	74LS38	17p	74LS243	60p	6810	150p	75159	200p	7815	35p		
4001	13p	4085	40p	74LS40	16p	74LS244	50p	6818	380p	75160	400p	7818	35p		
4002	13p	4086	32p	74LS42	32p	74LS245	50p	6820	140p	75161	400p	7824	35p		
4006	36p	4089	80p	74LS47	56p	74LS247	50p	6821	140p	75162	700p	7905	35p		
4007	13p	4093	18p	74LS48	56p	74LS248	50p	6840	310p	75172	720p	7912	40p		
4008	38p	4094	48p	74LS51	16p	74LS249	92p	6845	620p	75182	100p	7915	40p		
4009	20p	4095	58p	74LS54	16p	74LS251	30p	6850	110p	75183	100p	7918	40p		
4010	21p	4099	50p	74LS55	17p	74LS253	350	8080A	400p	75188	60p	7924	40p		
4011	13p	4501	30p	74LS73	28p	74LS256	60p	8085A	300p	75189	60p	78L05	28p		
4012	13p	4502	38p	74LS74	22p	74LS257	42p	8155	360p	75195	185p	78L12	28p		
4013	19p	4503	32p	74LS75	28p	74LS258	42p	8156	360p	75322	130p	78L15	28p		
4014	35p	4504	55p	74LS76	28p	74LS259	58p	81LS95	120p	75324	340p	78L18	28p		
4015	34p	4505	200p	74LS78	28p	74LS260	48p	81LS96	130p	75325	155p	78L24	28p		
4016	18p	4506	60p	74LS83	43p	74LS266	28p	81LS97	130p	75365	145p	79L05	40p		
4017	31p	4507	33p	74LS85	45p	74LS273	52p	81LS98	130p	75450	45p	79L12	45p		
4018	33p	4508	70p	74LS86	30p	74LS279	40p	8224	270p	75451	42p	79L15	48p		
4019	28p	4510	37p	74LS90	32p	74LS280	140p	8226	270p	75452	42p	7818KC	100p		
4020	35p	4511	40p	74LS91	75p	74LS283	60p	8228	270p	75453	65p	7824KC	100p		
4021	36p	4512	42p	74LS92	38p	74LS290	30p	8243	250p	75454	65p	LM309K	100p		
4022	36p	4513	80p	74LS93	30p	74LS293	30p	8250	850p	75480	135p	LM317K	220p		
4023	13p	4514	75p	74LS95	47p	74LS365	37p	8087	11100p	75491	60p	LM317T	180p		
4024	25p	4515	75p	74LS96	60p	74LS366	37p	8251	300p	75492	60p	LM323K	420p		
4025	13p	4516	40p	74LS107	32p	74LS367	35p	8253	320p	8T26	95p	LM723	40p		
4026	60p	4517	120p	74LS109	34p	74LS368	38p	8255	310p	8T28	110p	78HGKC	570p		
4027	18p	4518	38p	74LS112	36p	74LS373	55p	8256	1200p	8T31	330p	78H05KC	800p		
4028	29p	4519	30p	74LS113	32p	74LS374	55p	8257	350p	8T95	90p	78H12KC	700p		
4029	35p	4520	38p	74LS114	35p	74LS375	58p	8259	360p	8T96	110p	78GUIC	190p		
4030	17p	4521	90p	74LS122	400p	84LS390	50p	8271	3400p	8T97	90p	79GUIC	215p		
4031	90p	4522	50p	74LS123	42p	74LS393	45p	8272	1200p	8T98	110p	79HGKC	800p		
4032	54p	4526	40p	74LS124	85p	74LS399	80p	8279	450p						
4033	60p	4527	44p	74LS125	36p	74LS629	105p	8282	300p						
4034	80p	4528	40p	74LS126	36p	74LS641	110p	8283	400p						
4035	45p	4529	75p	74LS132	40p	74LS642	200p	8284	440p						
4036	180p	4532	52p	74LS133	34p	74LS644	280p	8287	360p						
4037	75p	4551	80p	74LS136	35p	74LS645	170p	8288	650p						
4038	48p	4553	190p	74LS138	35p	74LS670	72p	8748	1100p						
4039	190p	4555	29p	74LS139	35p	74LS674	400p	8755	1400p						
4040	36p	4556	38p	74LS145	83p	74LS687	270p	AY3-1015	290p						
4041	38p	4557	190p	74LS147	120p			AY5-3600	570p						
4042	30p	4583	60p	74LS148	90p	**COMPUTER ICS**		SP0256AL2	500p						
4043	36p	4584	30p	74LS151	32p	2114	200P	Z80ACPU	180p						
4044	38p	4585	42p	74LS153	40p	2532	330P	Z80BCPU	500p						
4045	72p			74LS154	90p	2716	200P	Z80ADMA	650p						
4046	45p	**74LS SERIES**		74LS155	41p	2732	280P	Z80APIO	230p						
4047	45p	74LS00	15p	74LS156	47p	2732A	300p	Z80BPIO	480p						
4048	27p	74LS01	15p	74LS157	30p	2764	240p	Z80ACTC	250p						
4049	18p	74LS02	15p	74LS158	33p	27C64	550p	Z80BCTC	480p						
4050	20p	74LS03	15p	74LS160	48p	27128	350p	Z80ASIO	860p						
4051	38p	74LS04	15p	74LS161	50p	27256-25	400p	Z80ASIO-1	700p						
4052	37p	74LS05	15p	74LS162	48p	41256-15	4.50	Z80ASIO-2	700p						
4053	37p	74LS08	15p	74LS163	46p	256DRAM	4.50	Z80ADART	680p						
4054	53p	74LS09	15p	74LS164	43p	4116	75p	74S188	175p						
4055	52p	74LS10	15p	74LS165	65p	4164	1.50	74S189	210p						
4056	52p	74LS11	15p	74LS166	74p	6116	2.00	74S201	240p						
4060	40p	74LS12	15p	74LS168	92p	6264-15	3.00	74S287	190p						
4063	52p	74LS13	22p	74LS169	85p	6502	300p	74S288	160p						
4066	20p	74LS14	30p	74LS170	80p	6502A	400p	74S289	180p						
4067	130p	74LS15	15p	74LS174	39p	65C02	930p	74S387	200p						
4068	13p	74LS20	15p	74LS175	42p	6503	570p	75107	80p						
4069	13p	74LS21	15p	74LS190	55p	6520	170p	75108	80p						
4070	13p	74LS22	15p	74LS191	52p	6522	330p	75109	110p						
4071	13p	74LS24	38p	74LS192	50p	6530	1050p	75110	80p						
4072	13p	74LS26	15p	74LS193	51p	6532	460p	75112	140p						
4073	13p	74LS27	15p	74LS194	53p	6545	880p	75113	105p						
4075	13p	74LS28	15p	74LS195	52p	6551	530p	75114	130p						
4076	45p	74LS30	15p	74LS196	62p	6800	210p	75115	130p						
4077	13p	74LS32	17p	74LS197	52p	6802	220p	75121	125p						
4078	13p	74LS33	17p	74LS221	56p	6803	800p	75122	125p						
4081	13p	74LS37	18p	74LS240	55p	6808	500p	75150	110p						
				74LS241	55p	6809	600p	75154	110p						
				74LS242	55p			75158	140p						

VOLTAGE REGULATORS

7805	35p
7812	35p

ZENERS

400MW

BZY88 RANGE
2v7 to 39V 6p

1.3W

BZX61 RANGE
2v7 to 39V 12p

LED

LED 3mm RED	5p
LED 3mm YEL	10p
LED 3mm GRN	10p
LED 5mm RED	5p
LED 5mm YEL	10p
LED 5mm GRN	10p

PLEASE PHONE US FOR TYPE NOT LISTED HERE AS WE ARE HOLDING 300 ITEMS AND QUOTATIONS ARE GIVEN FOR LARGE QUANTITIES. Please send 70p P&P and VAT at 15%. Govt. Colleges, etc. Orders accepted. Quotations given for large quantities. Please allow 7 days for delivery. All brand new Components. Prices quoted are subject to stock availability and may be changed without notice.

GRANDATA LTD
K.P. HOUSE, UNIT 15,
POP IN COMMERCIAL CENTRE,
SOUTHWAY, WEMBLEY, MIDDX.
Phone: 01-900 2329
Telex: 932885 (Sunmist)
Access & Barclaycard accepted
Open Monday to Saturday

PROGRAM NOW

THE ADVANCED PROGRAMMERS JOURNAL

The one tool every programmer should have!

★ ★ ★

Issue number 10 on sale the 11th October - price £1.25. Available from all good newsagents or direct from Program Now, Intra Press, Intra House, 193 Uxbridge Road, London W12 9RA.

From Intra Press, publishers of Practical Electronics

TEL 01-471 9338 VIEWCOM TLX: 929709 VICOM G

Specialised Supplier of Digital Integrated Circuits

4000 SERIES

	£ p
4000B	0.12
4000UB	0.13
4001B	0.12
4001UB	0.13
4002B	0.13
4006B	0.34
4007UB	0.13
4008B	0.34
4009B	0.20
4009UB	0.20
4010B	0.21
4011B	0.12
4011UB	0.13
4012B	0.13
4013B	0.19
4014B	0.34
4015B	0.34
4016B	0.18
4017B	0.30
4018B	0.32
4019B	0.28
4020B	0.35
4021B	0.36
4022B	0.36
4023B	0.13
4023UB	0.18
4024B	0.25
4025B	0.13
4026B	0.80
4027B	0.18
4028B	0.28
4029B	0.34
4030B	0.17
4031B	0.92
4032B	0.54
4033B	0.60
4034B	0.80
4035B	0.45
4036B	1.80
4037B	0.75
4038B	0.48
4039B	1.88
4040B	0.33
4041B	0.38
4042B	0.30
4043B	0.36
4044B	0.38
4045B	0.72
4046B	0.45
4047B	0.44
4048B	0.28
4049B	0.18
4050B	0.20
4051B	0.36
4052B	0.36
4053B	0.36
4054B	0.52
4055B	0.52
4056B	0.52
4059B	3.46
4060B	0.39
4063B	0.47
4066B	0.18
4067B	1.28
4068B	0.13
4069UB	0.13
4070B	0.13
4071B	0.13
4072B	0.13
4073B	0.13
4075B	0.13
4076B	0.44
4077B	0.14
4078B	0.13
4081B	0.12
4082B	0.13
4085B	0.38
4086B	0.32
4089B	0.80
4093B	0.18
4094B	0.46
4095B	0.58
4096B	0.88
4097B	1.25
4098B	0.50
4099B	0.45
4500B	8.10
4501UB	0.30
4502B	0.38
4503B	0.32
4504B	0.98
4505B	1.98
4506	0.60
4506UB	0.88
4507B	0.33
4508B	0.70
4510B	0.36
4511B	0.39
4512B	0.40
4513B	1.10
4514B	0.72
4515B	0.72
4516B	0.38
4517B	1.15
4518B	0.38
4519B	0.30
4520B	0.38
4521B	0.90
4522B	0.48
4526B	0.38
4527B	0.44
4528B	0.38
4529B	0.70
4530B	0.90
4531B	0.60
4532B	0.52
4534B	2.63
4536B	1.38
4538B	0.59
4539B	0.65
4541B	0.65
4543B	0.84
4544B	1.50
4547B	1.41
4549B	3.88
4551B	0.80
4553B	1.60
4554B	1.94
4555B	0.35
4556B	0.38
4557B	1.45
4558B	0.99
4559B	3.40
4560B	1.10
4561B	1.02
4562B	3.40
4566B	1.55
4568B	2.50
4569B	1.72
4572B	0.32
4580B	1.82
4581B	1.18
4582B	0.68
4583B	0.60
4584B	0.30
4585B	0.42
4597B	2.82
4598B	3.10
4599B	1.70
40097	0.45
40098	0.42
40100	1.72
40101	0.84
40102	1.10
40103	1.10
40104	1.10
40105	1.44
40106	0.38
40107	0.52
40108	2.90
40109	0.85
40110	1.95
40114	1.95
40116	8.10
40117	2.25
40147	2.25
40160	1.10
40161	1.10
40162	1.10
40163	0.75
40174	0.48
40175	0.54
40181	2.10
40182	0.85
40192	0.58
40193	0.56
40194	0.66
40195	0.80
40208	2.95
40240	1.36
40244	1.36
40245	1.36
40257	1.35
40373	1.10
40374	1.10
43403	3.58
45000	15.14
45026	3.09
45027	4.10
45028	4.10
45029	4.10
45040	7.44
45041	7.88
45106	5.40
45109	3.08
45138	1.48
45145	9.25
45146	10.44
45151	15.00
45152	16.50
45156	13.50
45157	11.06
45158	11.94
45159	23.00
45406	3.32
45411	6.44
45414	10.50
45428	9.25
45429	6.94
45433	18.46
45440	12.75
45441	11.31
45453	6.94

74 SERIES

7400	0.22
7401	0.32
7402	0.20
7403	0.16
7404	0.25
7405	0.24
7406	0.38
7407	0.38
7408	0.15
7410	0.15
7413	0.35
7414	0.30
7416	0.35
7417	0.35
7420	0.25
7425	0.18
7427	0.20
7430	0.24
7432	0.29
7437	0.18
7438	0.39
7442	0.40
7446	0.60
7451	0.20
7470	0.30
7472	0.20
7473	0.25
7474	0.36
7475	0.30
7476	0.25
7483	0.60
7485	0.60
7486	0.35
7490	0.50
7492	0.45
7493A	0.55
74104	0.44
74107	0.30
74121	0.45
74123	0.60
74125	0.48
74126	0.35
74128	0.52
74160	0.55
74161	0.60
74163	0.84
74164	0.98
74174	0.65
74175	0.55
74245	1.47
74257	0.76
74265	0.80
74283	0.70
74298	1.24
74365	0.44
74367A	0.80

74LS SERIES

74LS00	0.13
74LS01	0.14
74LS02	0.15
74LS03	0.15
74LS04	0.15
74LS05	0.15
74LS06	0.42
74LS07	0.42
74LS08	0.15
74LS09	0.17
74LS10	0.15
74LS11	0.15
74LS12	0.15
74LS13	0.24
74LS14	0.21
74LS15	0.16
74LS20	0.15
74LS21	0.15
74LS22	0.16
74LS24	0.38
74LS26	0.15
74LS27	0.15
74LS28	0.15
74LS30	0.15
74LS32	0.16
74LS33	0.16
74LS37	0.18
74LS38	0.17
74LS40	0.16
74LS42	0.32
74LS47	0.56
74LS48	0.56
74LS49	0.64
74LS51	0.16
74LS54	0.16
74LS55	0.17
74S173	0.26
74LS74	0.22
74LS75	0.28
74LS76	0.28
74LS77	0.75
74LS78	0.28
74LS83	0.42
74LS85	0.44
74LS86	0.28
74LS90	0.32
74LS91	0.75
74LS92	0.36
74LS93	0.30
74LS95	0.46
74LS96	0.60
74LS107	0.32
74LS109	0.32
74LS112	0.32
74LS113	0.32
74LS114	0.32
74LS122	0.40
74LS123	0.42
74LS125	0.35
74LS126	0.35
74LS132	0.35
74LS133	0.35
74LS136	0.35
74LS137	0.76
74LS138	0.35
74LS139	0.35
74LS145	0.76
74LS147	1.12
74LS148	0.85
74LS151	0.32
74LS153	0.40
74LS154	0.88
74LS155	0.40
74LS156	0.46
74LS157	0.30
74LS158	0.32
74LS160	0.48
74LS161	0.48
74LS162	0.46
74LS163	0.46
74LS164	0.43
74LS165	0.62
74LS166	0.68
74LS168	0.72
74LS169	0.65
74LS170	0.78
74LS173	0.72
74LS174	0.38
74LS175	0.42
74LS181	1.50
74LS182	1.60
74LS183	1.60
74LS189A	1.30
74LS190	0.55
74LS191	0.52
74LS192	0.50
74LS193	0.50
74LS194	0.52
74LS195	0.52
74LS196	0.60
74LS197	0.52
74LS221	0.56
74LS240	0.55
74LS241	0.54
74LS242	0.55
74LS243	0.60
74LS244	0.49
74LS245	0.50
74LS247	0.50
74LS248	0.50
74LS249	0.82
74LS251	0.30
74LS253	0.44
74LS256	0.60
74LS257	0.40
74LS258	0.40
74LS259	0.58
74LS260	0.35
74LS266	0.28
74LS273	0.52
74LS279	0.39
74LS280	1.10
74LS283	0.58
74LS290	0.32
74LS293	0.32
74LS295	0.95
74LS298	0.65
74LS299	1.40
74LS321	5.64
74LS322	1.80
74LS323	1.80
74LS347	1.20
74LS348	1.28
74LS352	0.90
74LS353	0.90
74LS363	1.40
74LS364	1.40
74LS365	0.37
74LS366	0.37
74LS367	0.35
74LS368	0.37
74LS373	0.55
74LS374	0.55
74LS375	0.55
74LS377	0.82
74LS378	0.72
74LS379	1.10
74LS380	5.63
74LS385	2.46
74LS386	0.48
74LS390	0.50
74LS393	0.45
74LS395	0.78
74LS396	1.70
74LS398	1.24
74LS399	0.75
74LS445	1.52
74LS450	5.02
74LS453	5.02
74LS460	5.63
74LS461	4.99
74LS461A	5.99
74LS465	1.35
74LS467	1.80
74LS468	2.89
74LS469	4.99
74LS469A	5.99
74LS491	4.99
74LS491A	6.47
74LS534	3.68
74LS540	0.95
74LS541	0.95
74LS546	4.65
74LS547	4.65
74LS548	4.20
74LS549	4.20
74LS566	4.65
74LS567	4.65
74LS568	1.95
4LS569	1.57
74LS593	8.48
74LS620	1.55
74LS621	1.55
74LS622	1.55
74LS623	1.55
74LS624	1.55
74LS625	2.30
74LS626	2.20
74LS627	2.35
74LS628	2.20
74LS629	1.10
74LS640	0.98
74LS641	0.90
74LS642	1.10
74LS643	1.10
74LS644	1.10
74LS645	1.10
74LS646	5.60
74LS647	5.60
74LS648	5.60
74LS649	5.60
74LS651	6.32
74LS652	5.60
74LS653	5.60
74LS654	5.60
74LS668	0.85
74LS669	0.78
74LS670	0.72
74LS673	3.40
74LS674	3.40
74LS682	2.40
74LS683	2.40
74LS684	2.40
74LS685	2.40
74LS686	3.30
74LS687	2.70
74LS688	1.85
74LS793	3.28
74LS794	3.28
74LS795	1.40
74LS796	1.40
74LS797	1.40
74LS783	14.60
74LS848	1.65

LINEAR

4N33	0.73
555	0.20
555CMOS	0.90
556CMOS	1.40
709-DIL	0.30
741-DIL	0.16
748-DIL	0.20
AD574AJD	29.20
AD574AKD	43.60
AD741KN	0.40
AD7537JN	21.69
AD7542KN	19.80
DAC0800LCN	2.45
DG211CJ	2.05
HI1-201-5	2.50
HI1-574AKD-5	43.60
HS574AK	19.90
ICL7106CPL	6.95
ICL7107CPL	6.95
ICL7109CPL	11.59
ICL7126CPL	6.95
ICL7135CPI	15.50
ICL7136CPL	6.95
ICL7137CPL	6.95
ICL7139CPL	23.35
ICL7660CPA	2.40
ICL7673CPA	1.60
ICL8068ACJD	10.57
ICM7207AIPD	6.90
ICM7208IPI	20.50
ICM7211AIPL	14.60
ICM7212AMIPL	5.60
ICM7216AIJI	27.60
ICM7216DIPI	26.10
ICM7217BIJI	10.10
ICM7218BIPI	8.97
ICM7224IPL	4.60
ICM7227AIPI	12.60
ICM7227IJI	14.20
ICM7555IPA	0.90
ICM7556IPD	1.40
MM53200CN	3.40
NE531	1.15
NE544	1.70
NE5532P	1.40
NE5533P	1.50
NE5534P	1.10
NE555	0.20
NE556	0.40
NE558	1.50
NE564	3.80
NE565	1.10
NE566	1.30
NE567	1.15
NE570	3.60
NE571	2.90
NE592	0.85
OPO7CN	1.50
STK4141-2	6.90
TIL32	0.50
TIL111	0.75
TIL113	0.95
TIL119	1.00
TL497ACN	1.85
TSC7135CPI	15.50
UA2240PC	3.80
UA741MP	0.65
UA741TC	0.55
UA748CP	0.65
UA9636ACP	3.20
UA9637ACP	2.40
UA9638CP	3.20
UA9639CP	3.20
UDN6118A	1.60
UDN6128A	4.86
ULN2002A	0.70
ULN2003AN	0.65
ULN2004A	0.65
ULN2068B	4.21
ULN2802	1.80
ULN2803A	1.55
ULN2804A	1.70
UPC1188H	4.50

COMPUTER & MISC. IC'S

	£ p
1488P	0.60
1489P	0.60
14C88N	1.25
14C89AN	1.25
6502	3.25
6502A	4.70
65C02	9.20
65C02P3	9.60
6522	3.30
6522AP	5.40
6532	6.75
6545-1	9.70
6551	6.40
68B00CPU	6.90
6802P	2.20
6809P	5.90
6821P	1.40
6840P	3.10
6845P	6.20
68B21P	3.00
8080A	7.60
8085A-2	3.90
80C85A	4.50
80C85A-2	13.70
82C54P 8MHZ	5.90
82C59A-2RS	4.50
80C86A,-2	28.90
8212	2.90
8251	2.90
8251A	3.40
8259	2.95
8259A	3.40
8287	3.40
B2C84	5.95
D82C284-8	12.90
D82C288-10	11.60
AY-5-8136	6.45
AY-5-8136-006	7.80
CRT-7004/001	9.90
DS1221	8.90
DS1231	5.90
DS1231-20	7.40
DS1232	5.90
HCPL-2630	5.86
HCPL-2730	3.75
HCPL-2731	4.25
HCPL-4100	5.82
HCPL 4200	5.82
HI1-0509-5	9.70
HI13-201-5	2.78
HI1-0509A-5	8.95
M80C85A-2	8.90
M80C86RS	28.50
M82C59A-2RS	6.85
M82C84A-2RS	6.90
M82C88AS	16.36
MCT61	1.40
MM58274 BN	8.70
MAX359CPE	7.80
MUX08EP	7.40
SN5404N	0.45
Z80A-CPU	1.70
Z80APIO	2.30
Z80A-CTC	2.20
Z80A-SIO	4.75
Z80A-DART	5.40
Z80B-CPU	3.40
Z80B-PIO	3.40
Z80B-CTC	3.40
Z80B-DART	5.72
UPD7201C	5.60
UPD8085AHC-2	3.90

DYNAMIC RAM

4164-15	P.O.A
4416-15	P.O.A.
41464C-12	7.80
41256C-15	P.O.A.
TMS4465-12	7.80
M88264A-12	2.40

STATIC RAM

2114LP-30	1.50
2114LP-20	1.80
6116LP-2	P.O.A.
6116LP-3	P.O.A.
6264LP-15	P.O.A.
CDM6116AE3	2.40
CXK5864PN-15L	P.O.A.
CXK58256P-12L	17.80
HM4334P-3	3.40
HN462256LP-10	18.90
TC5516AP	P.O.A.
TMS4016-15NL	2.40

DUAL PORT RAM

IDT7130L-100P	17.40
IDT7130S100	17.40
IDT7132LA-100P	15.50

E²EE/UVE PROMS

27256-25	5.00
27C256-15	5.60
27C256A-25	7.20
27C256-25 21V	7.20
27C256-30 21V	6.90
27C256AD-15	7.90
27C256-15DC	7.30
B2708	3.00
UPD27C512D-15	18.65
UPD27C64-15 21V	8.80
HN27C64G-15 21V	8.80
HN27C64G-20 21V	8.80
HN462532P	6.30
M8M27C64 20 21V	8.80
M8M27128-25	7.10
M8M27C256A 25	7.33
TBP24SA10N	3.00
X2816AP-25	13.90
X2864AD-35	18.50
X2864AP-35	16.95

VOLTAGE REG'S

LM317L	0.72
REF25Z	0.82
TA78005AP	1.65
7805	0.35
7806	0.35
7808	0.40
7809	0.35
7812	0.40
7815	0.40
7818	0.40

PLEASE ADD 70p P&P and then 15% V.A.T.
OFFICIAL ORDERS from Govt. & Educational Establishments are accepted. For OVERSEAS orders, postage AIR/SURFACE charged at cost. No V.A.T. for EXPORT orders.
Please phone/write for items not listed or see previous issues. N.B. Prices subject to change without notice & stock availability.

VIEWCOM ELECTRONICS
77 Upperton Road West
Plaistow, London E13 9LT

INDEX TO ADVERTISERS

A.D.A.M. Electronics 58
A.D.M. Electronic Supplies .. 58
Astronomy Now 47
Barrie Electronics 56
B.K. Electronics 18
Blue Harrow Ltd. 59
Bull J. 48
Classified Ads 58,59
Coles Harding 58
Computer Salvage Specialists 59
Cricklewood Electronics 62
C.R. Supply Co. 58
C-Scope 56
Deansgate 59
Display Electronics 34
ESR 58
Fernlea Cable Assemblies ... 58
Golden Orange Supplies 59
Grandata 61
Greenbank Electronics Ltd..... 56
Hanney, L.F. 58
Highland Regional Council .. 59
I.C.S. 29
J.P.G. Electronics 58
Keytronics 26
Limrose Electronics 31
London Electronics College 58
Magenta Electronics 32,33
Maplin Electronics ..... OBC
M.C.P. Electronics 5
Memory Maintenance 31
Millea Electronics 58
Omni 58
Phonosonics 31
Program Now 61
Soft Machine 31
Specialist Semiconductors 25
Stan Willetts 55
Suma Designs 56
Tandy ..... IFC, IBC.
Technomatic 10,11
T.J.A. Developments 29
T.K. Electronics 33
Viewcom 62

PLEASE MENTION PRACTICAL ELECTRONICS WHEN REPLYING TO ADVERTS

SUFFERING FROM COMPONENT DEFICIENCY?

Symptoms:

Frustrated / half built projects
Sleepless nights
Non working equipment
Out of stock blues

SEE YOUR SPECIALIST!

CRICKLEWOOD ELECTRONICS LTD

The components stock centre

The fast solution to component problems

OLD, NEW, RARE and COMMON

Service is our obsession

Mail orders, telephone orders, credit card orders, callers welcome.

CRICKLEWOOD ELECTRONICS LIMITED
40 CRICKLEWOOD BROADWAY, LONDON NW2 3ET
Tel: 01 450 0995 & 01 452 0161 Telex: 914977

VISA Access

REALISTIC®

Portable All-Band World Receiver

Realistic DX-440. Tune into international news, views and entertainment from all over the world! This exciting "Voice Of The World" receiver features PLL synthesized circuitry which locks onto exact frequency so you can enjoy drift-free reception from around the globe. Receives FM stereo and full AM (150-29,999 KHz) including longwave, mediumwave and SW bands. Simply punch in any frequency with the direct-entry keys or use the 9-station memory for even faster access! Features automatic and manual scanning modes to locate any station on the air. With built-in monaural speaker, LCD quartz clock with timer, telescoping aerial and headphone socket. Requires 2 "AA" and 6 "C" batteries or AC/DC adapter.

20-221 ..... **£149.95**

Tandy®

Tunes You Into A World Of Better Listening

Over 400 Tandy Stores And Dealers Nationwide.

Prices may vary at Dealers. Offers subject to availability.

Tandy, Tandy Centre, Leamore Lane, Bloxwich, Walsall, West Midlands, WS2 7PS.

THE NEW MAPLIN CATALOGUE
IT'S OUT OF THIS WORLD
SEND FOR YOUR COPY TODAY
ORDER YOUR COPY OF THE NEW MAPLIN CATALOGUE ON SALE SOON
Pick up a copy from any W.H. Smith for just £1.95 or post this coupon now to receive your copy by post for just £1.95 + 50p p & p. If you live outside the U.K. send £3.40 or 15 International Reply Coupons. I enclose £2.45.
Name
Address
Post Code
Send to Maplin Electronics, P.O. Box 3, Rayleigh, Essex SS6 8LR.
PE 89
AVAILABLE FROM 11th NOVEMBER 1988 IN ALL W.H. SMITH STORES