FREE 'SMARTBook' DEMO DISK OFFER

# ELECTRONICS in ACTION

October 1993 £2.25

## Fractal Imaging

*The ultimate in image compression*

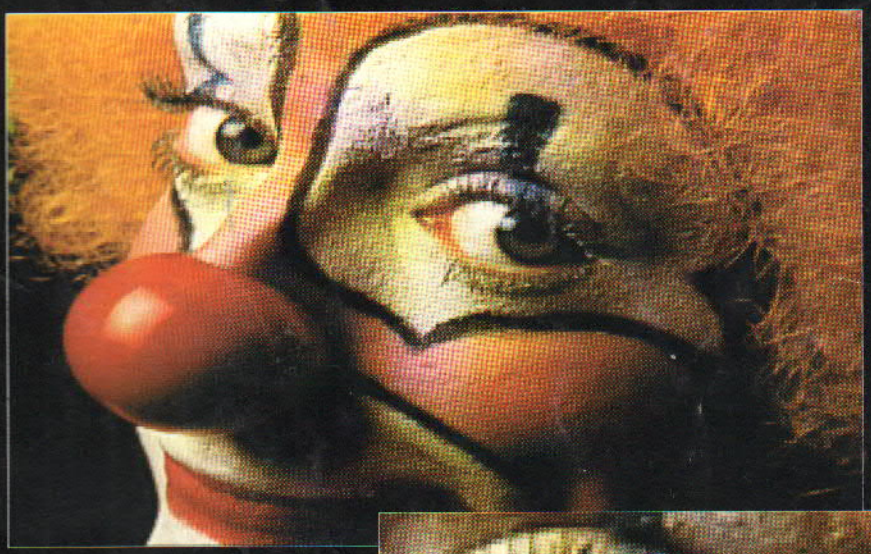

## Anti-Howler

*Eliminate feedback from your P.A. system*

## Audiophile Pre Amp

*High quality sound for vinyl fans*

## LASER

*The first semi-conductor LASER for home construction*

## SMARTBook

Exclusive demo disk offer of the latest Fractal Authoring System

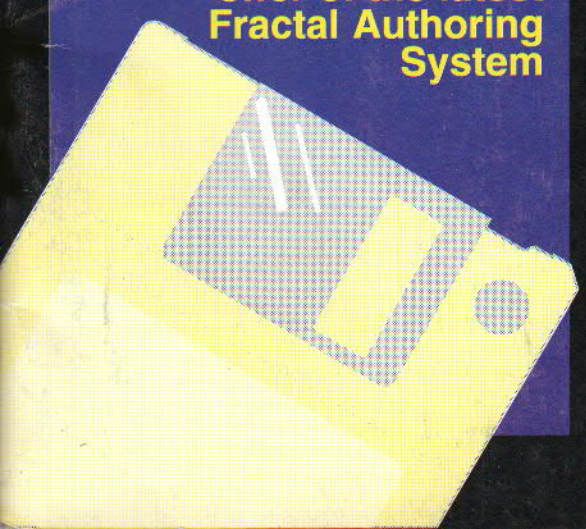

## The Telescope

*An invaluable piece of test equipment*

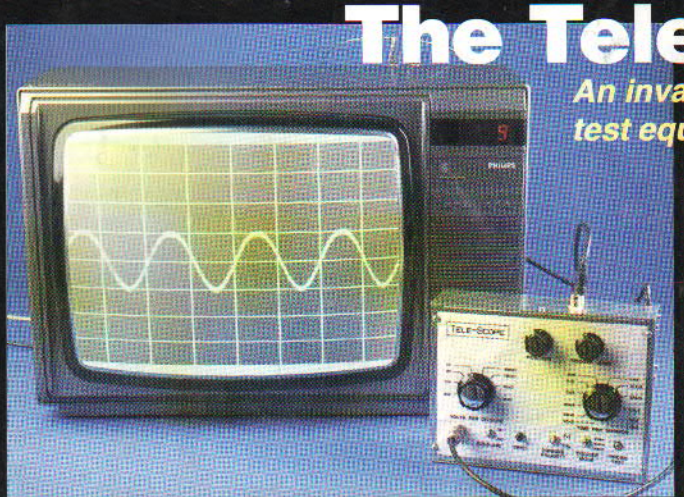


ISSN 0969-3564

COPUS

COMMITTEE ON THE PUBLIC UNDERSTANDING OF SCIENCE

ROYAL SOCIETY · ROYAL INSTITUTION · BRITISH ASSOCIATION FOR THE ADVANCEMENT OF SCIENCE

Media fellowships ★ Science book prizes

Michael Faraday Award

Lectures ★ Speaker database

Broadcasting

Grants ★ Media training courses

Research Horizons Conferences

Museums ★ Women's activities

Parliament and Government ★ Schools liaison

For further information about these and other activities contact:

COPUS, c/o THE ROYAL SOCIETY
6 CARLTON HOUSE TERRACE
LONDON SW1Y 5AG
Telephone: 071-839 5561, ext. 266/219

# ELECTRONICS in ACTION

ISSUE 1 VOLUME 1

**EDITOR**
*Paul Freeman-Sear*

**DESIGNER**
*Susan Campbell*

**TECHNICAL ILLUSTRATION**
*JPD*

**ADVERTISING SALES**
*Gilly Martin*

**CONTRIBUTORS**
*Andrew Armstrong*
*Chris Frost*
*Bob Garrioch*
*Alan McKeon*
*Mike Meechan*
*Peter Roberts*
*David Silvester*
*Paul Stenning*
*Cartoons by*
*Jackie Devereaux*

An eye on the future


Quantum House Publishing Ltd.

PO BOX 600, BERKHAMSTED
HERTS HP4 1NL
TELEPHONE 0442 842069
FAX 0442 842279

**4 Here is the news...**
What's going on in the technology world
A news view from all points of the compass

**8 Signal to Noise**
A selection of your views and/or grievances

**10 A Fractal Future for Digital Imaging**
Dramatic changes have taken place instoring images on the computer. Alan McKeon, Managing Director of Iterated Systems explores this latest technology

**17 The Audiophile Pre-amp**
Despite the rapid expansion in CD technology, there is still a place for playing your prized LP collection. Very often, discerning listeners require the best that technology can provide. Mike Meechan has produced a design we hope is suitable for the audio palette

**26 Experiments in the LASER Zone**
The solid state LASER has remained within the commercial world until now. Here is the first of a series constructional experiments to break new ground in home construction

**32 Anti Howler**
Just how many public places do you go to where the PA system decides to form its own method of ear splitting entertainment by screeching at you. To help stamp out this cacophony, Andrew Armstrong provides the very circuit

**38 Life in the S-Gen waves**
Here's a piece of test equipment that nobody should do without. David Silvester provides a guided tour around building this sine wave generator

**44 The Crossover Conundrum**
Peter Roberts discusses ways to get the best out of your speakers

**51 What is a SMARTBook?**
Bob Garrioch from Frax Ltd. introduces us into the world of electronic authoring

**58 The Telescope**
Convert your TV screen into an osciloscope.Another good idea from Paul Stenning

**54 Ideas Forum**
The place where inovative ideas turn into great inventions

**56 Technoshop**
Find out the latest offers, exchanges and requirements in the pursuit of design excellence

**66 Future View**
Each month a celebrated scientist gives his views and predictions regarding our future

# Welcome to Electronics in Action

Thank you for picking up this magazine, it's great to have you with us.

Yes this is a magazine with a refreshing difference, a magazine with new ideas, topical features, new plans and exciting things to build. Hold on to your copy for we hope it will not only provide an insight into this ever changing technological world but also give you the start of an idea to develop for yourself .

## A Different Ingredient

Most magazines provide a passive element to our lifes, a one way process of consuming information just like TV. Our aim, specifically on the ideas page, is to provide just enough information to encourage further investigation by yourselves. To that end we might be asking more questions than providing the answers in a bid to get discussions going. To that we offer no apologies for to start the brain on a course to discover new processes and products will benefit us all.

Believe it or not, the Department of Trade and Industry together with the Confederation of British Industry has launched a campaign this year to try to make industry become more innovative. Entitled, Innovate or Liquidate, the initiative was designed to get industry to take a fresh look at the way in which it not only produces new goods but also the way it carries out manufacturing procedures.

We, within the confines of this magazine, will try to stimulate new ideas and new ways of thinking and also to reflect those developments by publishing your ideas.

## Brainstorming

A well known technique in advertising circles is to have a brainstorming session. Bouncing ideas around a group can provide the most unexpected advertising ideas. Applying the same technique to a magazine and those that read it is difficult, as the delayed exchange of ideas produces a loss of momentum. However, if by getting the thread of an idea from the magazine and knowing that you have a group centre of similar friends around you, as could be advertised in this magazine, the mini centres of thought or excellence might produce some interesting suggestions and developments. I hope that will be the case.

Thank you for taking the time to buy and read this magazine I trust it will provide food for thought.

**Paul Freeman-Sear**

Every care is taken when compiling the magazine. However, the publishers cannot be held legally responsible for errors in the magazine or from loss arising from those errors. Any errors discovered will be published in the next available edition of the magazine. Electronics in Action is published on the third Thursday of the month preceding the cover date. The magazine contents remain the copyright of Quantum House Publications Ltd. Any reproduction requires written consent of Quantum House Publications Ltd. All prices contained in the magazine are correct at time of going to press. The publishers or the advertisers cannot be held reponsible for any variations in price or availability after the magazine has gone to press.

Published by **Quantum House Publications Ltd**, PO Box 600, Berkhamsted, Herts HP4 1NL. Newstrade distribution by Seymour, Windsor House, 1270 London Rd, Norbury, London SW16 4DH Tel: 081 679 1899. Reproduction by Island Graphics, Chesham, Bucks. Tel: 0494 773082. Printed by Wiltshire (Bristol) Ltd, Philip St, Bedminster, Bristol BS3 4DS. Tel: 0272 760076



# NEWS

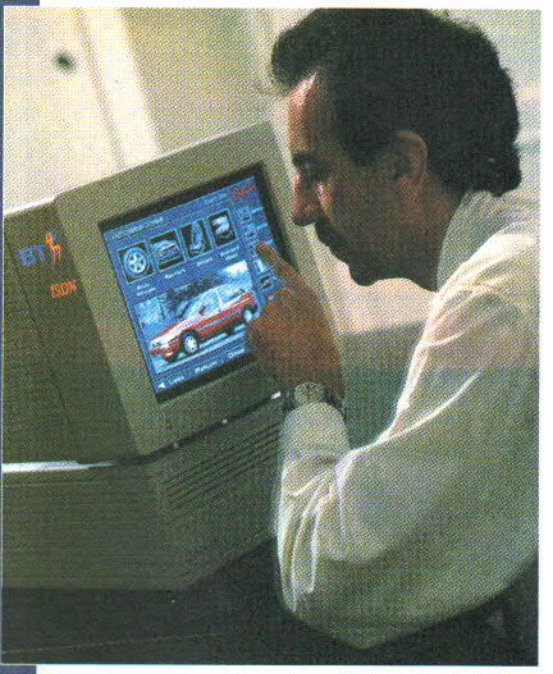

## THE SHOPPING REVOLUTION

**A new** application using BT's ISDN newtork has been launched and is set to change the way we shop. Applied Interactive Marketing, a multi media agency has developed a touch screen sales tool. It also includes a marketing research to give retailers and manufacturers a competitive business edge.

A car manufacturer for example could combine everything that currently exists in a range of brochures into a single multimedia sound and vision system. The terminal provides still images, video, voice and text all from a central database. Dealers around the country would then access the database via an ISDN telephone line. One chief advantage over printed material and brochures is that prices and product information can be instantly updated on screen.

Touch screens provide a quicker route to customer requirements. In the car example, the customer can build up an image on screen of all the optional extras they would like to have including their favorite colour, trim, wheels and dashboard.

Research has shown that the interactive element of pictures and sound has resulted in a doubling of the

amount of information retained by the customer during sales drives.

The application is also considered ideal for shopping malls and airport terminals. From these points, names and addresses of interested parties can be 'phoned through to the nearest dealers automatically.

Not only does the terminal provide help in determining which product the customer should buy but it also provides highly accurate market research information. The system also calculates its own success rate at creating sales through an interactive approach. It also quantifies the lost sales providing data on what the customer really wanted. The multimedia agency is also testing the system in areas of fashion, home furnishing and domestic appliances.

# MINIDISC DATA STANDARDS FOR DATA STORAGE

**Sony** has developed standards for MD DATA, the new high capacity data storage medium for personal computers.

The computer industry has a growing need to store large amounts of data on a recordable medium and this standard is based on specifications recently established for the MiniDisc personal audio system, which Sony introduced in November 1992. Sony proposes to offer the new MD DATA standard to computer and other manufacturers to generate industry support.

Floppydisks have been very popular for everyday data storage because of their low cost and compact size. However, the need to add graphic and audio information to documents created on a PC led to the demand for a removable data storage medium capable of handling larger amounts of data. While magneto optical (MO) discs are currently being used to meet these needs for workstations, Sony believes that factors, such as system size cost and ease-of-use will make MD DATA products widely accepted by consumers wanting portable computing applications.

Sony want to turn MD DATA into the next generation in data storage technology. They hope that MiniDisks will also be cost-effective and user-friendly as floppydisks, MD DATA will also provide several special features including, a small portable size, 140MB memory. capacity 2,000 frames of still color images on one MD DATA disc;

It will also be capable of a data transfer rate of 150kB per second, enabling CD full motion video to run.

A new filing system has been developed as part of the MD DATA standard to provide compatibility between computers based on different operating systems (0S).

Computers using different CPUs and/or OSs employ file systems unique to their standard. These file systems determine file structure and the manner in which data is written onto the disk. As a result, it is difficult to interchange floppydisks between computers of different platforms.

The MD DATA's file system should overcome this problem. Once the software is installed onto the computer, information written onto MD DATA discs can be retrieved and modified regardless of differences in the CPU and/or 0S of the computers being used.

**Specifications**

| | |
|---|---|
| **Recording Capacity** | 140MB (maximum) |
| **Sector Size** | 2,048 bytes |
| **Data Units** | 64kB |
| **Data Transfer Rate** | 150kB/sec |
| **Cartridge Dimensions** | 68mm x 72mm x 5mm |
| **Disc Diameter** | 64mm |
| **Disc Thickness** | 1.2mm |
| **Track Pitch** | 1.6 |
| **Laser Wavelength** | 780nm |
| **Numerical Aperture** | 0.45 |
| **Recording Method** | Magnetic Modulation Overwrite System |
| **Linear Velocity** | 1.2m/sec-l.4m/sec |
| **Modulation System** | EFM |
| **Error Correction System** | |
| Adaptive Cross Interleave Reed Solomon Code (ACIRC) | |

# NO ORDINARY BATTERY CHARGER

**Innovations** is now marketing a device to extend the life of your ordinary batteries by 10 fold. Called the Battery Manager, the product has been developed by the Innovations Design, Engineering and Development Team. Together with the inventor, they have invested six years to finding a solution to the unnecessary waste of ordinary general purpose batteries. Nearly 12 billion disposable batteries are purchased worldwide each year and by marketing this product, the company hopes to reduce this 'battery mountain'.

The Battery Manager is said to extend the life and actually revitalise dry cell disposable batteries safely, restoring them to full voltage. The MK1 Battery Manager is for AAA and AA battery sizes only, and the MK2 is the universal model for the most commonly used domestic battery sizes: AAA, AA, C, and D.

Battery Manager's recharging system is said to have passed rigorous testing from two independent testing laboratories and will recharge Zinc Chloride and Alkaline primary cells as well as the Ni-Cad rechargeable batteries). The recharging time can be as low as 8 to 12 hours depending on the battery size and type and it is said most

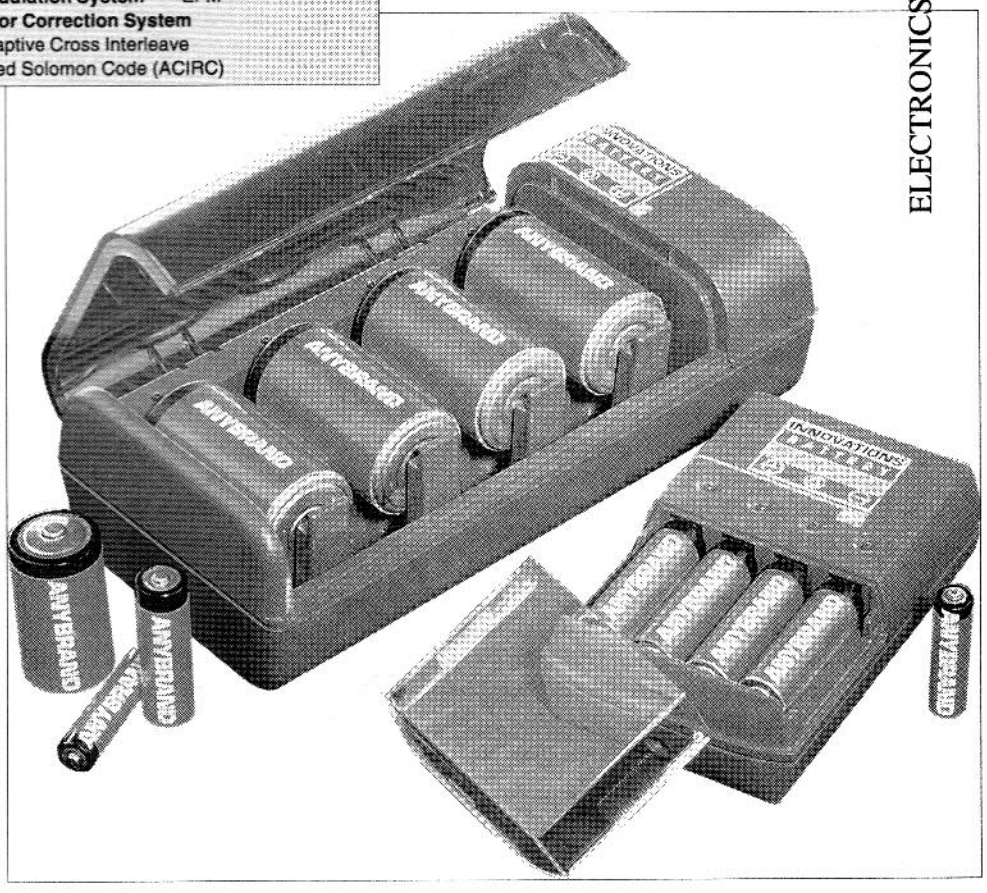

batteries can be recycled at least 20 times, but each time there is a diminished recharge cycle.

The charging of non-rechargeables has not been welcolmed by the battery manufaturers. They say there is a danger that the batteries could explode. The Battery Manager is said to overcome this problem by using an intelligent monitoring system to control the charging cycle with it automatically cutting off when maximum capacity is achieved or if it is unsuitable for recharging. A patent to cover the Innovations technology has been applied for.

Battery Manager MKl retails at £29.95 and the MK2 at £39 .95. Both are supplied complete with a BS approved mains charger/adapter plug. Battery Manager is available from:

**Innovations International Ltd**
**Tel:081 878 9111**

# ELECTRONIC TRADING - A WASTED OPPORTUNITY

**Leading industrialist**, Sir John Harvey-Jones has challenged senior businessmen attending the first Electronic Business Exchange conference as to why Electronic Trading, with all its potential, had been adopted by no more than 10,000 British companies.

Opening the conference, Sir John said: "My conviction has increased that in Electronic Trading we have a massive and beneficial instrument for change. Why have we taken up the idea so slowly? Why have we so frequently just gone for the perceived administrative savings instead of using it as a total key to business transformation? Why are we so loath to use technological opportunities like Electronic Trading when it pays for itself anyway just in the paperwork savings without the additional business advantages?"

He went on: "I have been amazed at how slowly Electronic Trading has spread. It's an area where, in Britain, we are actually ahead of the competition. Yet, against the potential of both the numbers of firms and the uses that could be made of Electronic Trading, we are barely scratching the surface. We may think that being first in Europe is good enough, but there are 1 1/2 million companies in this country. The responsibility for national revival rests squarely on business particularly small and medium sized business. Electronic Trading respresents such a big wasted opportunity; both as individuals and as a country, we need it taken up."

Throughout the two day conference, Sir John's 'call to action' was answered in no uncertain terms. Senior executives from across UK industry and commerce - including electronics, entertainment, financial services, manufacturing, publishing, retail and government - described the ways in which their businesses were already being transformed by the strategic application of Information Technology and Electronic Trading.

ICL Chairman & Chief Executive, Peter Bonfield, claimed: "Automating our purchasing, which involves £800 million per year in products and services, has reduced our administration costs by about 70%. We've reduced our inventory by certainly £100 million over 2-3 years, so a big impact in terms of the balance sheet and on customer response time. For instance, the delivery time for PCs has been reduced from four weeks a couple of years ago, importing a lot from the Far East; now we can do it in under 24 hours - 48 hours maximum.

The conference took place on 9th & 10th June at the Heathrow Penta.

# RECORD COMPANY LAUNCHES 4D RECORDING

**Deutsche Grammophon**, the German classical record company has launched a new digital recording technique. Klaus Hiemann, the director at the recording centre had thought for sometime that the sound quality of their digital recordings could be further improved, his goal was to make the technology of recording become 'transparent' and to try to account for things like colouration, phase differences and presence.

His new technique ensures that firstly the analogue sound is converted to digital signals as close to the microphones as possible. The aim here is to reduce to the minimum any electrical interference so the analogue to digital convertors are in with the musicians. Yamaha specially built 21bit A/D convertors for this purpose. The 144dB dynamic range acheived from the remote controlled 'stagebox', produces the equivalent of 24bit recording per channel. The digital signals are then fed to a digitally programmable mixing desk again made by Yamaha. Software had been specially developed for a clean mix of sounds. Once all digital signals are on tape, any corrections for balance, levels, colour and the like can be processed at any time after the recording session.

Older digital recordings have been reprocessed into 4D and are just becoming available.

# SCIENCE FOR LIFE

**A hugely** varying diet of Science and Technology was presented at The British Association For the Advancement of Science conference held at Keel University at the begining of September. Many parallel talks were running at any one time to give a wide choice for the delegates.

## Neural Networks

There are those that believe computers will never become intelligent and there are others that there is serious research to be done on at least attaining semi intelligence.

In this quickly growing area,Professor Kevin Warwick (University of Reading) suggested that by the end of the century, the Japanese hoped to have to have made a neural network having the intelligence of a cat.

He said, there are already artificially intelligent circuits installed on some manufacturing production lines to recognise shapes, colours and outlines of a commercial product. They have the ability to recognise a faulty product or one that does not look correct within 1/ 50 of a second. This is much faster and more reliable than any human could achieve.

He also said BT has been working on recognising individual parts of the human face from photographs. Although a high success rate had been acheived with identifying an eye on a face, the circuits were not so intelligent when the same task was performed on pictures of females!

## Making sense of the world

Professor Lewis Wolpert from University College, London argued that science is against common sense. He did make two exceptions to this, those of Ohms Law and Hookes Law, the man who investigated the science of stretching things. He further went on to separate Science and Technology by suggesting Technology is based on recipes, as in cookery and in carrying out a procedure, nothing has to be understood. A prime example of technology without understanding is us, the human species, he said.

One example he outlined that defied common sense was in the imaginary act of tying a piece of string tightly around the circumference of the earth. If an extra 36" of string were to be introduced into the loop and spread equally around the globe, the height of the string above the surface of the earth (assumed smooth) would be 6"!

## Space a Habitable problem

Professor Heinz Wolff (Brunel University) suggsted we might be doomed as a nation if we as a nation did not have a sizeable project to tackle and achieve. He said history has shown there has always been huge projects from building the pyramids to getting a man on the Moon to 'galvanise a nation'. This new project he suggested might be in manned space exploration and he outlined some everyday problems of living in microgravity space. Great emphasis has been placed on recycling as much as possible including air to breath and water to drink. Professor Wolff highlighted a design for removing the water content from a new supply of air for the astronauts. A cylindrical fine wire mesh would condense the water in the air like the action of water on a fine wire seive. The water would be drawn away by a lower gas pressure within the tube.

The Soviet Union had encountered problems when dealing with water that had left its container. It became a difficult challenge to retrieve a large sphere of water floating in space and there was a danger of it breaking up into many smaller spheres. The solution in the end was to drink it with straws - A Human Solution.

## Nanotechnology

Professor Colin Humphreys (Cambridge University) highlighted many promising areas of this recent technology. It seems that valves will make a come-back but this time in a very different form to the normal type, those of the 'nano' variety. It has been known for some time that transistors will not stand high temperatures or radiation levels such as in spaceflight. Solid state nanovalves are being developed to overcome these difficulties. A heated cathode is replaced by a cone of silicon, the radius of its tip being in nanometers. When a small voltage is applied to the anode, electrons are drawn out from this tip by Field emission.

He also outlined the exciting area of Light emitting Silicon. This only appears to happen on a very small scale of size in the nanometer region. So far this has only been acheived in an uncontrolled way using porous Silicon, but a new method has been discovered at Cambridge to make Silicon columns only 2nm in diameter using electron beam lithography. The importance of this work can not be understated as it could lead to much faster optical computers.

# MICROCHIP PROVIDES ELECTRONIC FINGERPRINTS

**IntaTag**, an encapsulated 96-bit microprocessor about the size of a grain of rice can provide electronic fingerprinting. It is also tiny enough to be hidden in a small circuit board or within a component on the board. The tagging gives the item permanent identification and is impossible to erase.

Each chip is programmed with its own recognition code as unique as an individual's fingerprint, the code being registered on a secure data base. The 12 digit code is read by a hand-held scanner for identification purposes.

IntaTag has a number of uses including irrefutably identifying recovered stolen goods, in-house security and inventory control..
IntaTag costs £14.95 (inc. VAT).
Further information from
**DH Associates**
**Tel:0424 426187**

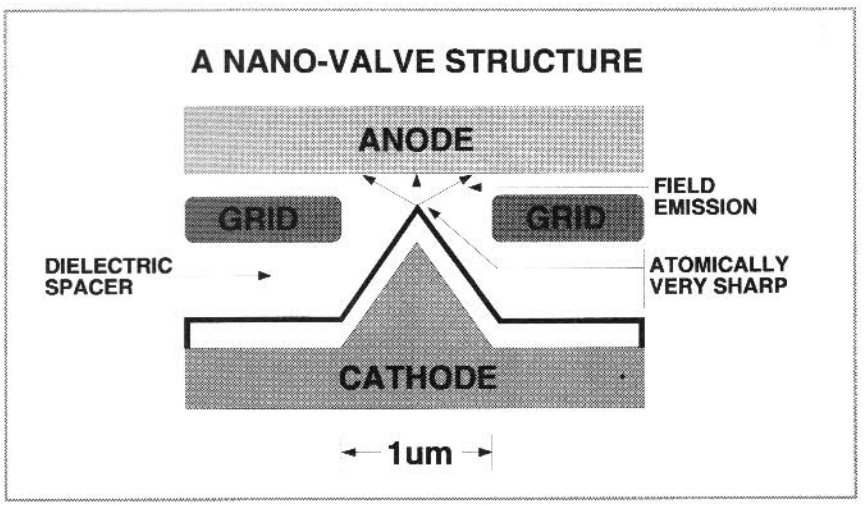

# Signal to NOISE

## A Selection of your views and thoughts

### Victims of our own success

Congratulations on the launch of a new and innovative magazine!

The birth of Electronics in Action is particularly timely as we, yet again, cycle through the boring annual ritual of events, concerning the release of the A-level results. Then comes the scramble for University/college places and finally the cry of complete surprise from government educationalists that so few students have a desire to study scientific subjects and thence pursue a corresponding career.

If you listen carefully, however you may just catch a dissident voice or two before the cycle fizzles out for yet another year. I refer to statements from academics that the reason for the low uptake of science places in higher education is due, in no small part to the background of science teachers in schools. It is a most unfortunate fact that a very large proportion of science teachers actually graduated with non-scientific degrees. Science graduates are highly employable outside the teaching profession and, on the whole, choose a career which commands a higher salary and better conditions of service than the teaching profession is apparently considered worthy of. On the other hand, what do you do with a degree in Guadalupan Social History? We are,in a sense victims of our own success.

Teachers, on the whole, are an extremely professional body and, when our graduate of Mongolian Cultural Studies is asked to teach class 5C Nuclear Radiation,the course will invariably be considered a success purely on the basis of the standard of A-level results attained. The problem is that the students are not actually being taught science, per se. They are learning a small, passionless subset of science defined by the National Curriculum. No joy or enthusiasm can be imparted to students by teachers whose heart lies in the social policies of Botswana; only cold, emotionless facts.

'Electronics in Action', however, doesn't just relate science; it enthuses it to the reader. Reading it should remind us that project building is fun and inventing is not just the privilege of multi-national companies is in fact, within the capabilities of each and every one of us, as individuals. This is real science!

I wish you every success for the future.

**Colin White MSc, Senior Lecturer**
**University of Portsmouth**

**Please send any correspondance to:**
**The Editor, Electronics in Action**
**PO Box 600, Berkhamsted**
**Herts HP4 1NL**



# At Your Service

In order to build some of the creations appearing in this magazine, you may wish to fabricate them on a printed circuit board. It just so happens that Electronics in Action can provide these at very reasonable cost if the need arises. Just simply fill in your details in the box, send in your payment and we'll do the rest. You may photocopy the form if you wish as we know some of you do not like destroying the mag.

Payment must be received with order, either postal-order or cheque made payable to:

**Quantum House Publications Ltd.**

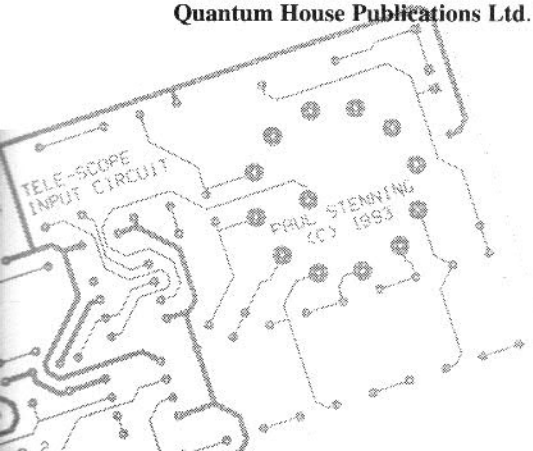


Please print your name and address in **BLOCK CAPITALS**

Name .....

Address .....

..... Postcode .....

Send the completed coupon (include 80p for postage and packing) to:
**At Your Service, Electronics in Action**
**PO Box 600, Berkhamsted, Herts. HP4 1NL**

**Please enter amount required in appropriate box**

| | | |
|---|---|---|
| ☐ | QH10931 Telescope Main Board | £12.00 |
| ☐ | QH10932 Hi-fi Preamp | £4.50 |
| ☐ | QH10933 Laser Zone | £5.00 |
| ☐ | QH10934 Anti-howler (double sided) | £5.50 |
| ☐ | QH10935 Sig Gen board | £4.50 |
| ☐ | QH10936 Crossover unit | £3.00 |

**Total remittance including P&P £ .**

**Allow 28 days for delivery**

# It only takes a second for a thief to steal your credit card, but he'd have a tough job stealing your fingers

Find out more in next months

## ELECTRONICS in ACTION

Our clowns eye has been enlarged conventionally and fractally, note the pixelation that occurs in the conventional method

# A Fractal Futu
# Digital Imag

**Digital images promise to revolutionise our world, and swamp our networks with large amounts of data. Fractals appear to offer a means to make digital images manageable by compressing them to a fraction of their original size. Alan McKeon reports on this fast growing new area**

Images are all pervasive, they are the means by which we quickly orientate ourselves. As technology changes digital images are promising much to enrich our world: up to 500 television channels on a single cable; information on demand such as holiday previews via dial-up services fed into the home over telecommunication lines; high definition TV offering television with wide-screen cinematic quality.

Most of the images we see today are analogue but just as the Compact Disc with its digital sound quality has usurped the humble analogue black vinyl disc, so digital images will replace analogue. The advantage of describing an image as a series of pixels (picture elements), each of which can be ascribed one of up to 16.7 million colours, is that the image can be accurately described by a computer as a series of 1's and 0's. This binary image can then be losslessly duplicated many times without loss of fidelity or quality. Being a binary description of an image it can be edited and modified by a computer creating breathtaking special effects such as those seen in Speilberg's Jurassic Park. Digital images are staging a revolution in consumer electronics, from their inclusion in video phone systems, to their use in CD-ROM's to extend the use of that 5" silver platter to carry more that just 60 minutes of music. When combined with CD-ROM's, digital techniques already enable the complete text of the

Encyclopaedia Britannica to be stored on a single CD-ROM but digital power comes to life when those words are illustrated and enhanced by images.

Fast communications have made information a commodity. We now have multiple television channels, continuous news services, community broadcasting channels, all competing for our attention. But other media have stepped up to the information age as well. Newspapers are published in a master version with local information, such as sports results, added at regional presses around the country. The demands for our attention are getting ever greater and increasingly we are using images to convey a message and to quickly understand that communication. In the PC world the ubiquitous rise of the Graphical User Interface (GUI) with its windows, icons, mice and pointers has shown how much quicker and easier it is for people to understand and use graphical information than to learn written instructions.

Ease of handling, duplicating, modifying and editing digital images is the great appeal to those in the industry but storing a digital image is no trivial

# re for ing

task - that CD-ROM with 600Mb of storage can store just 5 seconds of uncompressed moving video at TV quality. The challenge facing every user of digital images is that the infrastructure that we would want to use to deliver those digital images was designed for a different age. For example the standard phone line can be used to send digital information by using a modem at rates of up to 19.2Kbits/sec, that represents 2.4Kbytes/sec. A standard full screen (Super VGA) resolution image is 800 by 600 pixels in size. To describe a truecolour image takes 24-bits per pixel since each pixel consists of 8-bits Red, 8-bits Green and 8-bits Blue which gives a possible 16.7 million colour

Original Bitmap File, 768 x 512 x 24bit, 1180Kb

FractallyCompressed Image at 118Kb (10:1 compression)

Compressed Image at 25Kb (47:1 compression)

Compessed Image at 15Kb (78:1 compression)

Image compressed using JPEG file at 15Kb (78:1 compression). Note the 8x8 pixel blocks evident from the DCT and the Gibbs phenomena evidenced as shadow around the text.

The motorbike image has been Fractally compressed and is shown divided into strips of varying compression ratios from 100:1 to 10:1 from left to right.
The memory sizes are 18K, 23K, 39K, 58K and 118Kb respectively.
The original picture was a 1180Kb BMP file.

At extremes of compression a fractal image looks like a water colour that has been washed over and the eye quickly compensates to see the content of the image.

combinations, enough to describe all the colours the eye is capable of perceiving. To store this as a digital image would take 1,440,000 bytes (800x600x24/8) and to transmit this over a standard phone line will take 10 minutes. If we go up to a higher resolution such as XGA (1024x768) the problem increases.

Restricted bandwidth is the limiting factor and it is going to get worse rather than better. New technologies are competing all the time for the fixed bandwidth available. Wireless LAN's, Cellular communications, Personal Digital Assistants (PDA's) all demand their own area of the spectrum to operate in. The available spectrum for electromagnetic transmission is being stretched slightly by sophisticated electronics but not fast enough to accommodate the increasing demands for ever larger bandwidths.

## Digital Image Compression

The solution has to lie in reducing the amount of data required to describe the digital data being sent. There are two basic approaches to digital image compression, lossless and lossy. The lossless approach seeks to reduce the amount of information needed to describe the image in such a way that it can be restored at a later stage without any data loss whatsoever. For example if an image is described digitally as 34444444422222222255 it could be more easily written as 3, 8 4's, 9 2's, 2 5's, thus reducing its size. These techniques are contained within a variety of lossless encoding routines and can be found on PC's in common compression programs such as PKZIP and LH'Arc. The great advantage of being able to restore all of the data to its original format has a price however, the compression achieved is rarely more than a 4:1 reduction on the original file.

Much higher compression ratios can be achieved by taking advantage of the inherent corrective capabilities of the human visual system. We are used to dealing with imperfect visual information and lossy techniques attempt to exploit this by reducing the information contained within an image without impairing our ability to recognise and understand that image. For still images there are two predominant techniques, the Fractal Transform and the Discrete Cosine Transform (DCT) embedded within the JPEG (Joint Photographic Experts Group) standard.

The DCT works by breaking an image up into 8x8 pixel blocks and then reducing the information needed to describe that block. It uses cosine transforms to identify the higher frequencies, and hence less noticeable, elements of that block. At low compression ratios, typically 10:1 up to 20:1, this is a very effective technique but at higher compression ratios visible error which translates into physiological "noise" is evident. This takes two forms, visible edges to the 8x8 blocks and an echo phenomena around areas of sharp contrast known as Gibbs phenomena. These two factors limit the effective compression ratios for DCT based compression's to up to 20:1 compression.

The other technique for image compression is based on Fractal mathematics. The Fractal Transform was discovered by Dr Michael Barnsley, a British mathematician in 1988 and now forms the basis of an automatic method for encoding bitmapped images into fractal codes. The immediate

advantage of this approach lies in the dramatic increases in compression ratios offered, typically 50:1 with as much as 200:1 being achievable for high resolution images.

The motorbike picture shows the effect of Fractal Transform compression at high ratios, from an original image of 1,181Kb the image has been compressed to a variety of sizes. As compression increases, the amount of information stored for the image is reduced. This means that more error is introduced into the image but the fractal artefacts are pleasing to the eye. At extremes of compression a fractal image looks like a water-colour that has been washed over and the eye quickly compensates to see the content of the image. This pleasing characteristic is a side effect of the low information content of a fractal description of an image.

The key characteristics of fractals, (self similarity at different scales and description of an infinitely complex image from a finite data set) are used by Fractal Transform image compression. It works by searching an image for fractal patterns, which are effectively a set of equations that describe the image as a function of itself. The process works on a conventional bitmapped image. The entire area is covered with a set of non-overlapping rectangles called 'Domain blocks'. A set of possible 'Range Regions' whose sides are twice as long as those of the Domain Blocks are defined and introduced. These can be overlapping and may not cover the entire image between them. For each Domain Block the best fitting 'Range Region' is sought by applying affine mapping. Shifting, scaling and rotating the Range Regions to find the best possible fit over the Domain Blocks eventually reveals a set of equations which describe the image very compactly. In effect there are only two real pieces of information, the Range Region / Domain Block data and the list of coefficients of the affine mappings derived from the Fractal Transform process. Finally a lossless compression algorithm is used to store the sets of equations describing the image and save this data as a Fractal Image Format (FIF) file.

When decompression is required the set of equations is run repeatedly. After just a few iterations the initial image will appear. The process starts from two equally sized images that can be filled with any data. The affine maps are applied first to one image and then the results are applied to the second image. The images are swapped and the process repeated until these is little or nothing to choose between the first and second image.

Identifying the fractal codes that make up an image is a computationally intensive task but the regeneration of images is a simple, iterative process. The actual compression process involves describing a given image in terms of sets of patterns instead of a series of lines and dots. The Fractal Transform is unique in that it defines image content by describing the relationships amongst the various components of the image. By encoding images into mathematical formulae which have no effective resolution, they can be decompressed to any resolution without introducing 'blockiness'. By using the process on any given image, the fractal patterns can be 'grown', the result being a final image at a variety of resolutions; even higher than the original. This capability, termed 'Resolution Independence', is vital to ensure that digital images can be expanded to satisfy the needs of tomorrow's display and printing devices, in essence they are 'future proof'.

***Encarta, a 26 volume encyclopaedia contains over 7,000 full colour pictures all compressed into Fractal Image Format***

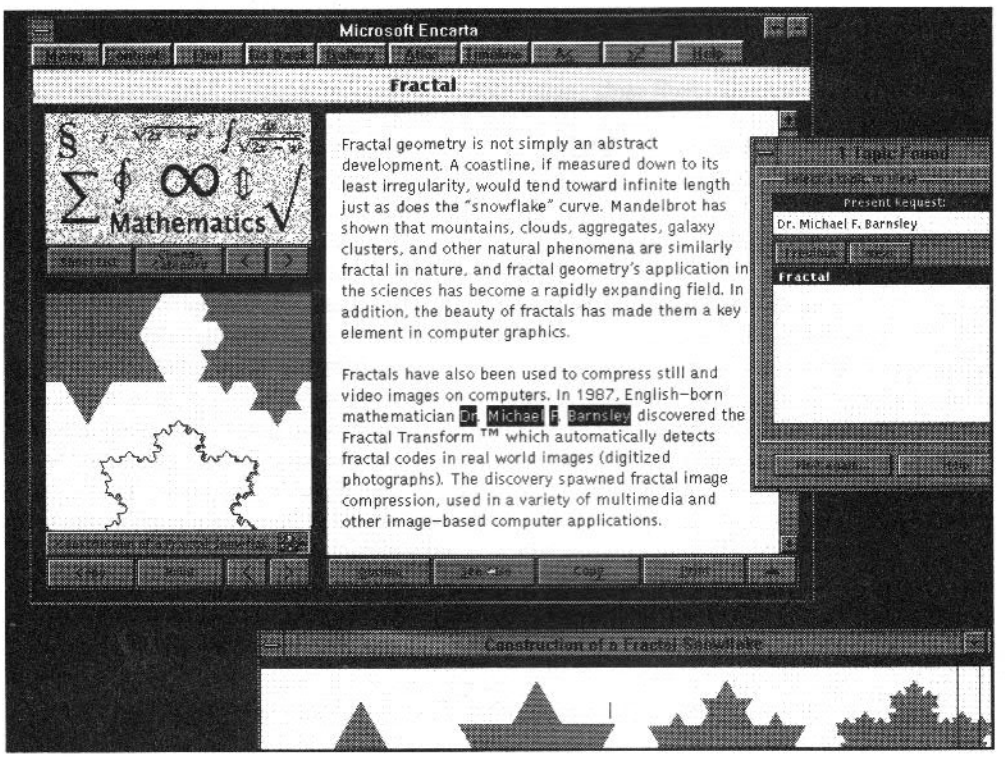


The fractal approach to digital image handling mirrors the way images are handled in most publishing situations. To set-up and produce a newspaper that includes images, requires significant effort, both financial and technological, whereas to buy a newspaper is as simple as visiting the local store and spending a few pennies. When we consider the way in which images are delivered to us, magazines, television, cinema, electronic games, it is apparent that they utilise existing cost economics, high performance from very low cost delivery. Fractal Transform compression echoes this, with computational effort being expended on digitisation and compression of the image but simple, low cost decompression and display offering high performance playback. For this reason, Fractal Transform image compression is said to be asymmetric.

## Encarta 26 Volumes on a CD

Companies such as Microsoft have recognised the advantages of Fractal

Transform compression as it offers very small file sizes for a given image quality, fast decompression and display and resolution independence. Encarta, a 26 volume encyclopaedia on a single CD-ROM, was recently published by Microsoft. It contains over 7,000 full colour pictures all compressed into FIF format which can be displayed quickly under Windows without additional hardware decompression or display cards. The combination of high compression ratios, enabling those 7,000 pictures to be stored in just 100Mb, together with fast decompression and display, made FIF the only feasible choice for the project . An increasing number of CD-ROM publishers are choosing Fractal Transform technology to provide images on their CD's without exceeding their data budget.

In other areas, low-bandwidth and simple decompression are being harnessed to open up new application areas, placing images where only voice or text was previously possible.

In telecommunications Fractal Transform technology is opening up new areas of consumer electronics. By compressing images to as little as 5Kb that same image which previously took 10 minutes to transmit over a phone line, can now be sent in just 2 seconds. Home shopping via a modem with a colour TV can now be achieved using the phone lines. This extension of the previously impossible into the practical has led to new applications for Fractal Image compression appearing almost every day.

Other applications of Fractal Transform technology include SMARTbook, a publishing system that makes a 100 page "floppy book", each page illustrated with a photographic image. The entire book, its playback software and the pages that make it up, can be put on a single, 1.44Mb, floppy disk. As these disks are reusable, they can be immediately updated when information changes and quickly reduplicated. This makes them totally recyclable and a cost effective means of achieving full colour publishing.

Fractal Transform technology is just emerging from an elegant idea to an established and accepted tool for users of digital images. Future applications currently under development will include the use of mobile data networks to transmit a photographic image of a criminal from the police national computer, to a terminal in a panda car on the high street to assist in identification. Ultra-high compression means that a person's face can be compressed to 3Kb, enough to store it and carry it around on the next generation of credit cards - smart cards.

***Fractally compressed movies have just been released offering overing over 100 minutes of footage on a single CD ROM***

## Fractal Motion Video

Digital image compression is not limited to still images, indeed, it is in the area of moving video that we see the greatest potential. Using Fractal Transform compression, a movie can be compressed so that a CD-ROM can store up to 2 hours of full motion video, a dramatic improvement over the 5 seconds of uncompressed footage that is otherwise possible. The first Fractal movies have just been released offering over 100 minutes of footage on a single CD-ROM which will playback in software alone on standard PC's. Again the three key features of Fractal Transform technology; low bandwidth, low cost playback and resolution independence; combine to offer very high quality video across bandwidths that had previously been restricted to simply voice or audio.

The evolution and acceptance of digital images will have dramatic impact on the delivery of information. It is now common to see colour photographs illustrating news stories. As we can absorb an image far more quickly than reading text, images will be a vital part of the current information explosion.

This poses some interesting questions for designers and companies delivering information services. How should we tackle the new visual information age? Do we need to build new infrastructures, replace phone systems, update television frequencies, rip out underground fibre optic cables in order to accommodate the volume of data created by digital images? Or should we adapt the way in which we handle digital data to make it fit our existing infrastructures?

Given the asymmetric nature of digital image compression using Fractal Transform technology, are there new markets for electronic images that can complement or even replace existing markets? For example video rental on demand - if you could phone into a central rental point and download a copy of the latest Schwarzeneger video over the phone line to a small storage and playback device sitting under your television, why would you want to drive to a shop and discover that the latest releases were all out on hire?

In the last decade we have seen low cost, personal computers revolutionise the established order in computing with people running more powerful computers on their desktop, than the mainframe systems that were running the company. In the next decade low cost digital imaging will have a similar effect on the way we receive, interpret and understand the world around us. Digital image compression has a key part to play in enabling the applications that will provide this and Fractal Transform technology is at the heart of digital image compression.

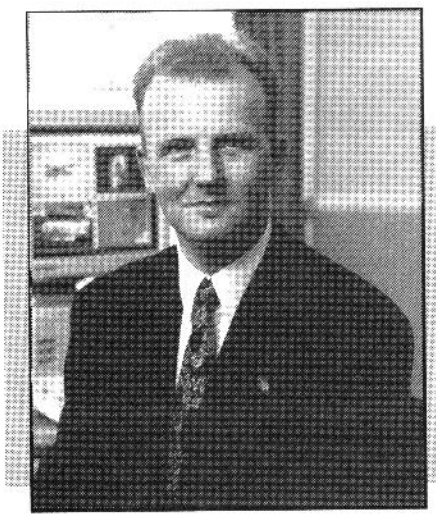

**About the author:**

Alan McKeon is Managing Director of Iterated Systems Ltd based in Reading (0734 880261). Fractal Transform technology is available within a range of software developers toolkits for C programmers and end user tools. Iterated Systems Ltd is the UK subsidiary of Iterated Systems Inc which was set up in 1987 by Dr Michael Barnsley and Dr Alan Sloan to develop and promote the Fractal Transform. Prior to joining Iterated Systems, Alan held senior sales management positions with Microsoft UK and Dun & Bradstreet software subsidiary, Logistics. He has a degree in Mathematics and Management from Manchester University (UMIST).

NEW VERSION 2 NOW SHIPPING

# SCHEMATIC DRAWING FOR WINDOWS

NEW LOW PRICES

ISIS ILLUSTRATOR combines the high functionality of our DOS based ISIS products with the graphics capabilities of Windows 3. The result is the ability to create presentation quality schematics like you see in the magazines. ILLUSTRATOR gives you full control of line widths, fill styles, fonts, colours and much more. When the drawing is complete, transferring it your WP or DTP program is simply a matter of cutting and pasting through the Windows Clipboard.

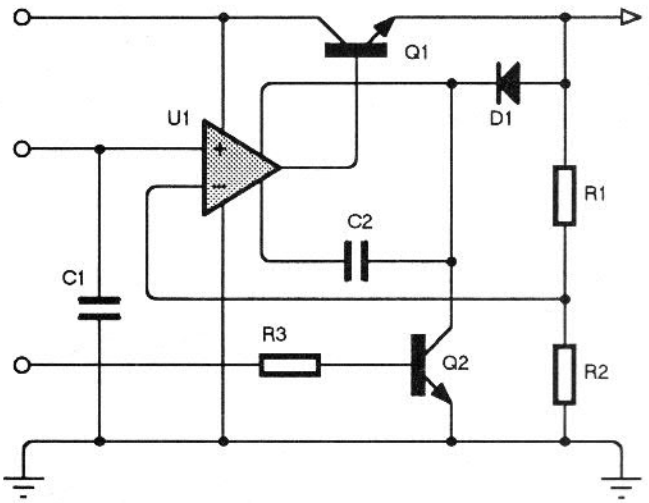


## Features

From £99

- Full control of drawing appearance including line widths, fill styles, fonts, colours and more.
- Curved or angular wire corners.
- Automatic wire routing and dot placement.
- Fully automatic annotator
- Comes complete with component libraries.
- Full set of 2D drawing primitives + symbol library for logos etc.
- Output to Windows printer devices including POSTSCRIPT and colour printers.
- ILLUSTRATOR+ adds netlist generation, bill of materials etc. and is compatible with most popular CAD software for DOS & Windows.

## CADPAK - Two Programs for the Price of One.

Only £79

**ISIS SUPERSKETCH**
A superb schematic drawing program for DOS offering Wire Autorouting, Auto Dot Placement, full component libraries, export to DTP and much more.

Exceptionally easy and quick to use. For example, you can place a wire with just two mouse clicks - the wire autorouter does the rest.

**PCB II**
High performance manual PCB layout package for DOS. Many advanced features including curved tracks, auto track necking, DXF export, Gerber and NC file generation, Gerber viewing and more.

Graphical User Interface with intuitive "point and do" operation gives unparalled ease of use.

## ISIS and ARES for DOS - The Professional's Choice

**ISIS** **from £275**
ISIS DESIGNER+ forms the ideal front end of your CAD system, providing schematic capture, netlisting, bill of materials and electrical rules checks. Advanced features include automatic annotation, hierarchical design and an ASCII data import facility. Put simply, DESIGNER+ is one of the easiest to learn and most powerful schematics packages available for the PC.

**ARES** **from £275**
The ARES range of advanced PCB design products links with ISIS (DOS or Windows) and other schematics programs. Working from a netlist, ARES helps you get it right first time with each connection automatically verified against the schematic.

ARES AUTOROUTE adds multi-strategy autorouting, whilst for the ultimate in performance, ARES 386 goes up to 400% faster with unlimited design capacity.

Labcenter Electronics

***Call us today on 0274 542868 or fax 0274 481078 for a demo pack. Combination, multi-copy and educational discounts available.***

*14 Marriner's Drive, Bradford, BD9 4JT.*

# EASY-PC, SCHEMATIC and PCB CAD

## Over 17,000 Installations in 70 Countries World-wide!

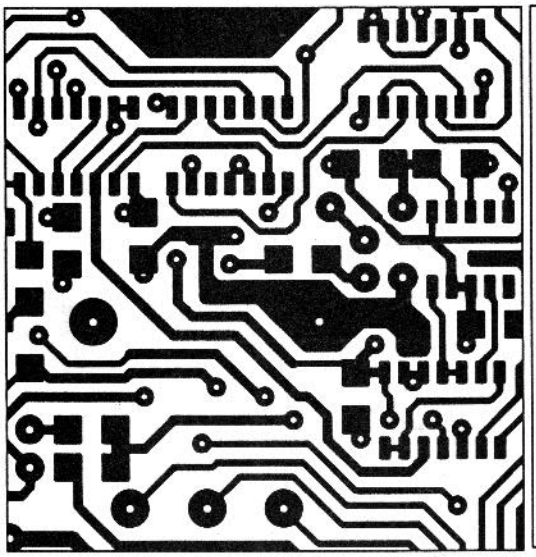

- Runs on:- PC/XT/AT/ 286/ 386/ 486 with Hercules, CGA, EGA or VGA display and many DOS emulations.
- Design:- Single sided, Double sided and Multi-layer (8) boards.
- Provides full Surface Mount support.
- Standard output includes Dot Matrix / Laser / Ink-jet Printer, Pen Plotter, Photo-plotter and N.C. Drill.
- Tech Support - free.
- Superbly easy to use.

**Still Only £98.00!** Plus P&P+VAT

BRITISH **DESIGN** AWARD *1989*

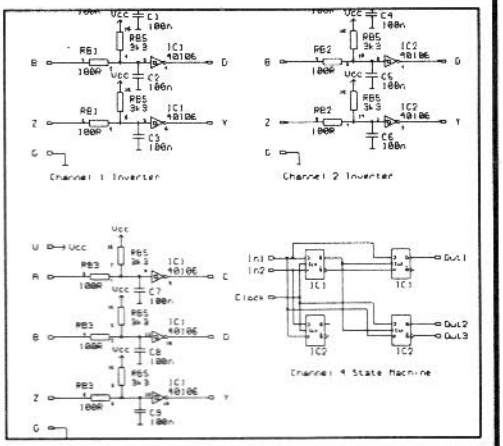

**Options:-500 piece Surface Mount Symbol Library £48, 1000 piece Symbol Library £38, Gerber Import facility £98.**

# *Electronic Designs Right First Time?*

***Ask for our fully functional Integrated Demo***

## Integrated Electronics CAD

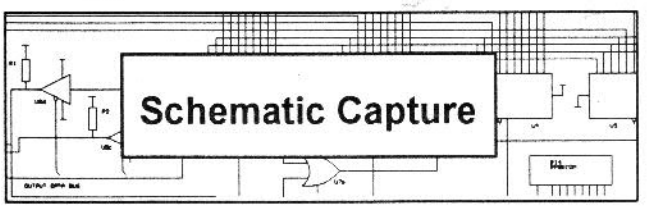


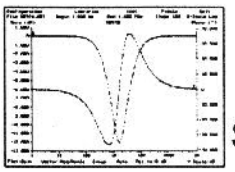

Analogue & Digital Simulation

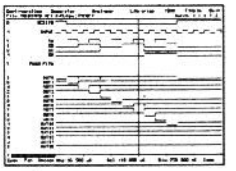

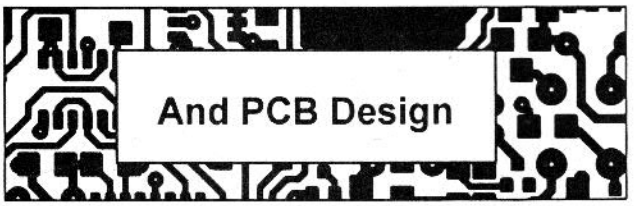


**For Less than £400/$775!**

## Affordable Electronics CAD

| | | |
|---|---|---|
| **EASY-PC:** Low cost, entry level PCB and Schematic CAD. | **$195.00** | **£98.00** |
| **EASY-PC Professional**: Schematic Capture and PCB CAD. Links directly to ANALYSER III and PULSAR. | **$375.00** | **£195.00** |
| **PULSAR:** Low cost Digital Circuit Simulator ~ 1500 gate capacity. | **$195.00** | **£98.00** |
| **PULSAR Professional:** Digital Circuit Simulator ~ 50,000 gate capacity. | **$375.00** | **£195.00** |
| **ANALYSER III:** Low cost Linear Analogue Circuit Simulator ~ 130 node capability | **$195.00** | **£98.00** |
| **ANALYSER III Professional:** Linear Analogue Circuit Simulator ~ 750 node capability. | **$375.00** | **£195.00** |
| **Z-MATCH II:** Smith Chart program for RF Engineers - direct import from **ANALYSER III.** | **$375.00** | **£195.00** |
| *We operate a no penalty upgrade policy. You can upgrade at any time to the professional version of a program just for the difference in price.* | *US$ prices include Post and Packing.* | *Sterling £ prices exclude P&P and VAT* |

For full information, Write, Phone or Fax:-

**Number One Systems Ltd.** **1**

**See us on STAND P29 EDS Wembley 5-7 Oct.**

REF: EIA, HARDING WAY, ST.IVES, HUNTINGDON, CAMBS, ENGLAND, PE17 4WR.
Telephone: 0480 461778 (7 lines) Fax: 0480 494042
International: +44 -480-461778, Fax:+44-480-494042 ACCESS, AMEX, MASTERCARD, VISA Welcome.

# The Audiophile Preamp

## Mike Meechan produces a hi-fi pre-amp for all those LP lovers

Various approaches to designing a low noise, low distortion pre-amp have been tried in the past - discrete transistor, IC, a hybrid of both, series and shunt feedback etc. Each type has its merits (and disadvantages, too). Traditionally, transistor designs are preferred by the 'golden-eared' fraternity of listeners and many first class designs have centred around this approach.

Despite the feather-ruffling that it may cause in some quarters, op-amps offer the ideal solution to the problem. Unlike a professional audio mixing desk, say, where commercial cost considerations preclude the use of state-of-the-art devices in every circuit across the console, a designer of a one-off

**Fig.1 RIAA Recording and reproducing characteristic**

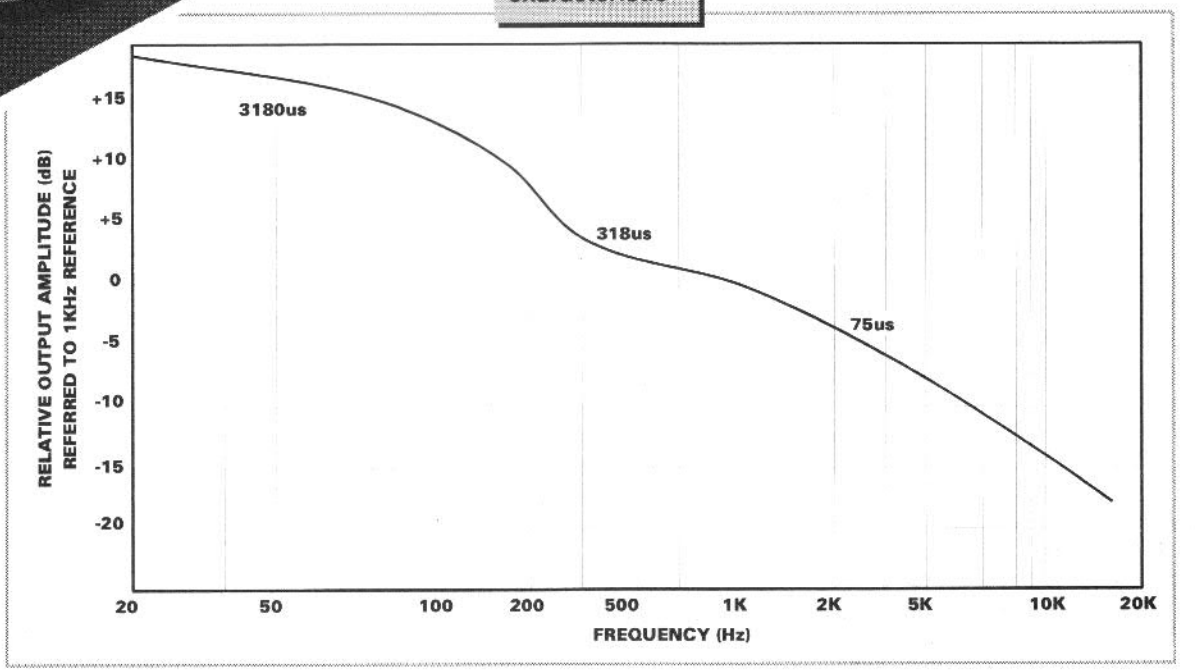

phono pre-amp can specify the very finest devices. The individual cost of these must be commensurate, with the overall projected cost of the unit.

Up-to-date analogue devices can now offer quite superb noise/distortion specifications, quite unlike the 741 genre of op-amp upon which many modern-day judgements of sonic nastiness are still made. Transistors within the IC will be perfectly matched. The circuit designer can then concentrate all of his/her energies on the associated passive networks, upon which equalisation accuracy and other factors determining the overall noise performance and long-term stability of the design depend.

Critical elements of the design are good noise performance and a frequency response which adheres strictly to the RIAA equalisation curve. As we shall see, there are some aspects of each which are inextricably linked, but initially, we'll look at both as two separate entities.

## Equalisation

There are two forms of equalisation in common usage. One is the RIAA, Recording Industry Association of America (or NAB) curve and the other is the German DIN (Deutsche Industrie Norm) standard, although both are confused so often as to be almost synonymous. The DIN standard (used in European countries), is sometimes known erroneously as the "new RIAA" standard. It is identical in all respects to the RIAA curve but for the introduction of a fourth, low frequency breakpoint.

| Frequency (Hertz) | Recording Characteristic (Relative Amplitude dB) |
|---|---|
| 20 | -19.3 |
| 25 | -19 |
| 31.5 | -18.5 |
| 40 | -17.8 |
| 50 | -16.9 |
| 63 | -15.8 |
| 80 | -14.5 |
| 100 | -13.1 |
| 125 | -11.6 |
| 160 | -9.8 |
| 200 | -8.2 |
| 250 | -6.7 |
| 315 | -5.2 |
| 400 | -3.8 |
| 500 | -2.6 |
| 630 | -1.6 |
| 800 | -0.8 |
| 1000 | 0.0 |
| 1250 | 0.7 |
| 1600 | 1.6 |
| 2000 | 2.6 |
| 2500 | 3.7 |
| 3150 | 5.0 |
| 4000 | 6.6 |
| 5000 | 8.2 |
| 6300 | 10.0 |
| 8000 | 11.9 |
| 10,000 | 13.7 |
| 12500 | 15.6 |
| 16000 | 17.7 |
| 20,000 | 19.6 |

**Fig.2 Table of prefererred frequencies and calculated recording characteristics (in accordance with RIAA standard**

This has a time constant of 7960us (20.2Hz) and was introduced on the playback side to improve signal-to-noise ratio and stability of the system at extreme low frequencies. This single-pole filter, when coupled to the response created by the 3180us time constant, gives a 6dB/octave roll-off to frequencies below 20Hz or so. Other problems in this area of the audio spectrum can be caused by bad pressings which in turn generate subsonic "warp" frequencies.

Figure 1 shows a gain versus frequency plot of the RIAA curve (record and playback), and Figure 2 shows, in tabulated form, the gain at specific key frequencies. In Figure 1, the three main frequencies of interest - 50Hz, 500Hz and 2122Hz - are shown. It is also traditional to show them as time constants, since it is more accurate - the frequencies are rounded whereas the time constants are absolute values.

## Types of Feedback

The two types of feedback are - series and shunt and it has been mentioned the major features required of the overall design were low noise, distortion and accurate adherence to the RIAA curve. Unfortunately, both series and shunt feedback cause problems in one or other of these areas and neither can satisfy both requirements simultaneously - it is

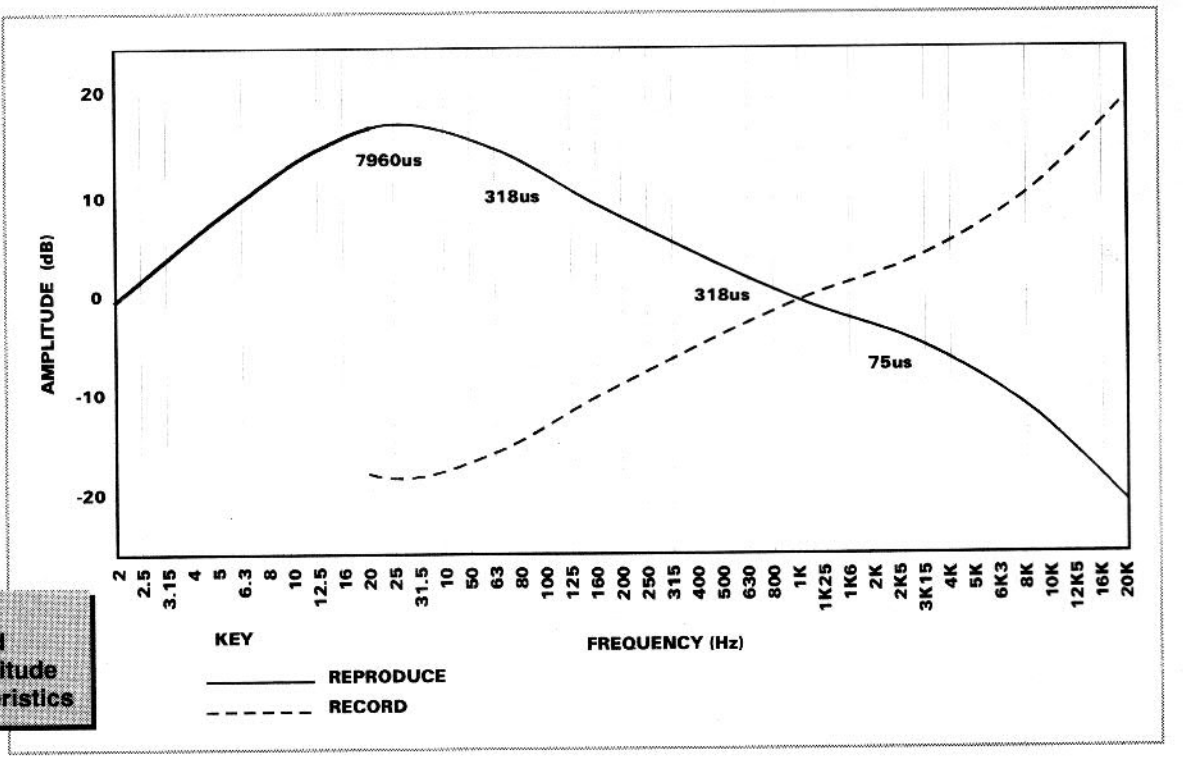


**Fig.3 New RIAA (DIN)recording and reproduction amplitude response characteristics**

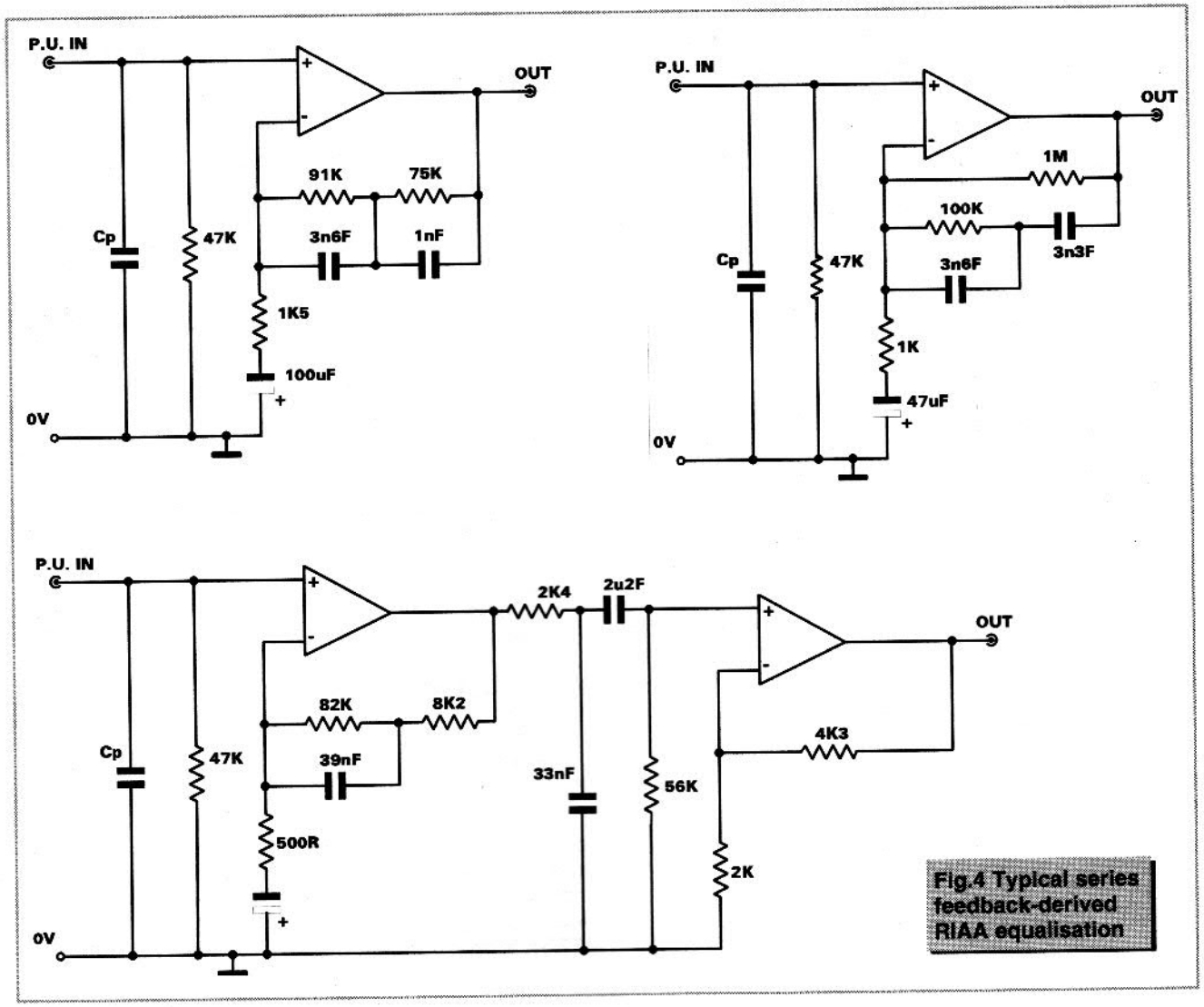


**Fig.4 Typical series feedback-derived RIAA equalisation**

difficult to get really low noise performance with a series arrangement and difficult also to get accurate amplitude response with shunt-applied feedback. We'll look at each type in turn to discover why this is so.

## Series Feedback

Refer to Figure which shows a typical series feedback arrangement. It is known sometimes as the "non-inverting" type, for obvious reasons. The network based around R1, 2 and C1, 2 is representative of those found in commercial designs, but other topologies give equivalent results and can be used to replace it. R3 is typically kept below 1K in value, so that it is not contributing further noise in addition to that already caused by the finite impedance of the cartridge itself, which is typically in the region of 500R to 1K.

Rs is a shunting resistor and provides damping for moving-magnet type cartridges, and Cs provides a shunting capacitance which should be equal to the combined total of cartridge capacitance (as specified by the cartridge manufacturer) and connecting cable capacitance. This shunt capacitance is more critical in value than many users/engineers give credit, since it resonates with the inductance of the cartridge (typically in the order of H), at or near the audible frequency ceiling, and so determines the upper frequency response of the transducer. Recommended load capacitances for various cartridges are specified by the manufacturer. Figure shows the effect of wrong values of capacitance fitted to the circuit input.

The non-inverting configuration of the amplifier means that gain can never fall below unity. This means an error in the amplitude response, since the RIAA curve dictates that gain should roll-off smoothly to zero at a rate of 6dB/octave above the 2122Hz pole. A third pole (at the unity gain frequency) is now introduced.

Gain at frequencies where there should be none can cause distortion in any following stages, since frequencies which should have been attenuated can now freely be amplified. Pre-amplifiers intended for use solely with moving magnets suffer less in this respect, since the combination of the inductance of the cartridge/shunt resistance of the amplifier rolls off the response very quickly above 20KHz or so.

It can be a problem, however, with moving coil cartridges. These types possess very low inductance (in comparison with moving magnet types) and so are able to produce significant output at frequencies up to, perhaps, 150KHz. Although such ultrasonic signals cannot be heard (except by bats!), they must be considered in any design since they can cause slew rate limiting of an amplifier. This, in turn, can cause all manner of distortion - transient, intermodulation, slew-induced - to in-band audio signals.

Another possible failing of the series feedback arrangement is in the way in which input stage non-linearities can cause distortion. This comes about because of the way that the impedance of the cartridge interacts with the amplifier, modulating the input impedance of it. The feedback loop, of course, cannot correct for this. The high common-mode rejection qualities of modern op-amps means that this is a problem more readily associated with discrete two or three transistor types, since these, typically, have poor

| FREQUENCY Hz | SPECIFIED RIAA AMPLITUDE dB | MEASURED AMPLITUDE dB |
|---|---|---|
| 2 | -0.2 | -0.3 |
| 4 | 5.7 | 5.7 |
| 8 | 11.2 | 11.3 |
| 16 | 15.4 | 15.3 |
| 20 | 16.3 | 16.2 |
| 30 | 17 | 16.9 |
| 40 | 16.8 | 16.7 |
| 50 | 16.3 | 16.2 |
| 80 | 14.2 | 14.2 |
| 100 | 12.9 | 12.8 |
| 150 | 10.3 | 10.2 |
| 200 | 8.2 | 8.2 |
| 300 | 5.5 | 5.4 |
| 400 | 3.8 | 3.7 |
| 500 | 2.6 | 2.5 |
| 800 | 0.7 | 0.6 |
| 1000 | 0 | 0 |
| 1500 | -1.4 | -1.4 |
| 2000 | -2.6 | -2.6 |
| 3000 | -4.8 | -4.8 |
| 4000 | -6.6 | -6 |
| 5000 | -8.2 | -8.2 |
| 6000 | -9.6 | -9.6 |
| 8000 | -11.9 | -11.9 |
| 10000 | -13.7 | -13.8 |
| 15000 | -17.2 | -17.2 |
| 20000 | -19.6 | -19.6 |

| FREQUENCY (Hz) | TOTAL HARMONIC DISTORTION | | | | |
|---|---|---|---|---|---|
| 20 | <0.002 | <0.002 | <0.002 | <0.002 | <0.002 |
| 100 | <0.002 | <0.002 | <0.002 | <0.002 | <0.002 |
| 1000 | <0.002 | <0.002 | <0.002 | <0.002 | <0.002 |
| 10000 | <0.002 | <0.002 | <0.002 | <0.002 | <0.003 |
| 20000 | <0.002 | <0.002 | <0.004 | 0.004 | 0.007 |
| | 0.03 | 0.1 | 0.3 | 1 | 5.0 |
| | OUTPUT AMPLITUDE (VRMS) | | | | |

**Gain=44dB (5mV i/p drives 0dB 0.775V o/p)**

**T.I.M. Distortion:>0.004% (88dB) Equal values of 10KHz and 11KHz mixed at the input in a 1:1 ratio and at an amplitude sufficient to give 2V output**

| NOISE WEIGHTING | CCIR/ARM | 'A' | FLAT |
|---|---|---|---|
| NOISE VOLTAGE | 260nV | 230n | 370nV |
| SIGNAL/NOISE REFERRED TO 5mV i/p @ 1KHz | 86dB | 87dB | 82dB |

**Note: Noise and distortion measurements made using a Hewlett Packard HP3561A Spectrum Analyser, Rohde and Schwarz 1Hz resolution SMG Siganl generator/Level meter and BBC ME2/5A Signal generator/programme test meter**

**Fig.5 Moving magnet input stage specification**

performance in this respect. What happens with these simple types (common in commercial pre-amplifiers of some years ago) is that the input impedance is modulated by the absolute value of signal input voltage. Since the amplifier input is affected by input impedance if the source impedance is high, distortion increases as source impedance increases.

The input impedance of a bipolar transistor, even with a very small emitter current, is insufficient to maintain a constant impedance for a moving magnet cartridge. This means that HF is rolled off because of the way that gain in a bipolar transistor diminishes with increasing frequency.

Feedback is normally held to be an all-encompassing panacea. Unfortunately, in the scenario just described, it can be somewhat ineffective. This is because the phase response of some feedback loops can be affected by the complex impedances which comprise the cartridge and connecting cables. It is obviously amplitude and frequency dependent, and manifests itself as frequency response variations, or instability in extreme cases. Worst of all, it might only occur with particular cartridge/cable combinations.

## Shunt Feedback.

All of the aforementioned problems might suggest that the shunt arrangement of feedback is definitely the path to pursue in any design. A typical shunt configuration is shown in Figure 6. Apart from the obvious disadvantages of the overall inverting response - it is widely accepted that it is better to maintain the absolute phase of the signal - the shunt-type seems to present itself as an ideal solution to the problem. The circuit accurately follows the standard RIAA curve, since absolute gain can be made to be less than unity ie asymptoting to zero at some high frequency. This means lower distortion (no unwanted out-of-band products present to cause slew rate limiting and subsequent transient intermodulation distortions) although this is not necessarily the case, and is as much to do with the designer's skill and choice of components and devices.

The fact that the input is virtually-earthed (therefore no voltage swing) means also that distortion is lower in those cases where the amplifier has poor common-mode performance. It is for this reason that THD figures are typically better for inverting

configurations that for non-inverting ones (though intuitively, one might think this a little strange).

As with everything in life, there has to be some compromise. The shunt feedback arrangement is no different, and the compromise assumes the guise of inferior noise performance. The 47K load impedance necessary for the cartridge now appears in series with the amplifier input. The noise from the resistor, assuming a 20KHz bandwidth, and a 290K temperature, can be calculated as follows:-

$$e_n = 4KTBr$$
$$= 4 \times 290 \times 20 \times 10^3 \times 47 \times 10^3$$
$$= 4\mu V$$

the 75us one and the 2k4, 56k and 2u2 capacitor provide the fourth (at 1.5Hz, in this example). In accordance with the DIN specification (or IEC recommendation shown in Publication 98, Amendment No 4) it should be at 20.2Hz, or 7960us.

A second advantage inherent to the two amplifier approach is in realising lower distortion figures. This is the case because each amplifier is operating at much lower gain than with the single amplifier approach, and also, since neither amplifier is required to drive capacitive feedback networks with the full preamplifier output voltage, distortion can be reduced to an even lower level.

and excellent noise and distortion performance.

Components used in the equalisation network are necessarily 1% tolerance or better. The only capacitors of this tolerance are polypropylene, polystyrene or mica types. Apart from the tolerance aspect, other characteristics of this family of capacitors make them particularly suitable for high quality audio design work. Fine inspection of the circuit diagram (and component overlay) might suggest that the use of smaller capacitances within the design would have made for a correspondingly smaller, more compact design, since polystyrene capacitors larger than say,

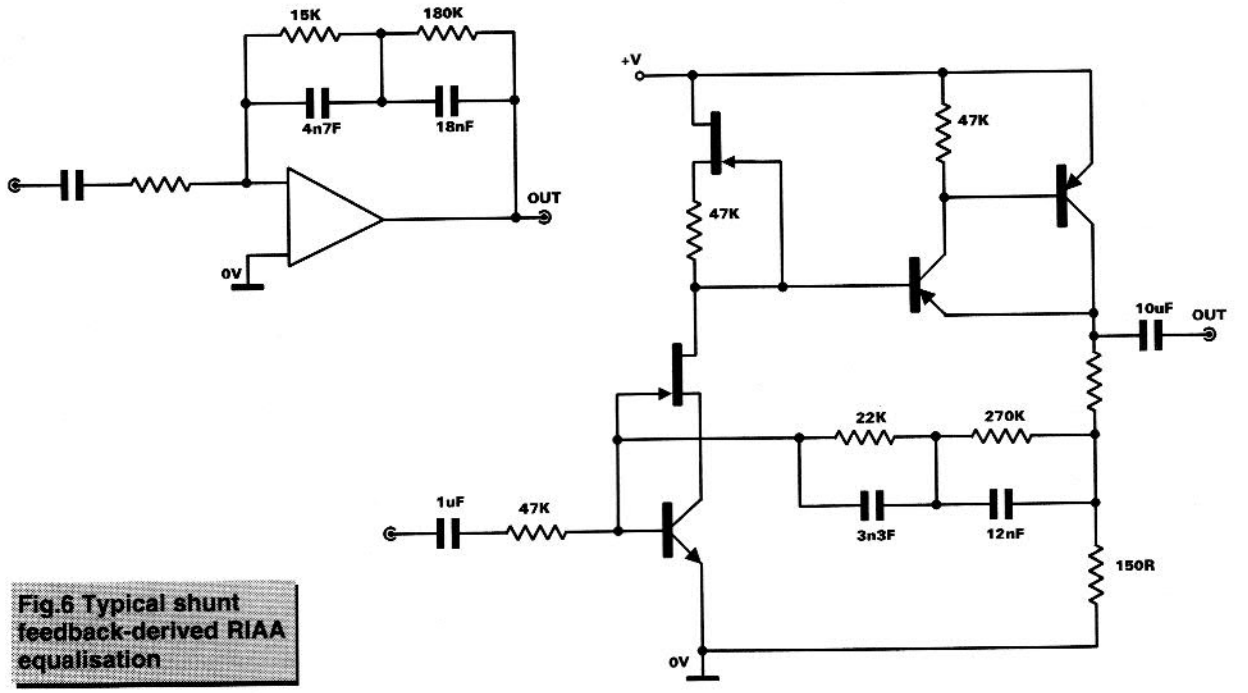


**Fig.6 Typical shunt feedback-derived RIAA equalisation**

Such a high impedance in series with the input also results in an increase in noise from a further source. This time, it is caused by an increase in noise current. This situation is worsened when the impedance increases (as the moving magnet resonates). Typically, the series arrangement achieves a noise performance some 13 to 18dB better than the shunt arrangement, with the absolute value dependent upon source impedance and the inherent noise current of the op-amp in use.

A further development which exploits the best aspects of both types is the arrangement shown in Figure 4c. The first amplifier (non-inverting, of course, and so possessing superlative noise performance) provides the 3180us and 318us de-emphasis time constants. The passive network formed from the 2K4 resistor and the 33n capacitor form

## Our Design

The design featured here uses the better aspects of both approaches. Input is via one quarter of a quad op-amp package. Although loop stability problems can plague designs where stages are added, careful design eliminates them. Avoidance of a problem such as loop instability is of prime importance in a phono preamplifier, where 100% feedback at high frequencies is necessary. The circuit features a two stage design, with gain and equalisation split between the two stages.

Further, it adheres very accurately to the RIAA (sorry, DIN) curve, rolling off, as the specification prescribes, at 6dB/octave below 20.2Hz and with a gain which asymptotes to zero at the same rate at frequencies above 2122Hz. The preamp also possesses an amplitude response of better than 0.1dB accuracy,

10n, are rather big in stature. This is true, but there are other factors which determine the size of the capacitors which we can use in the equalisation network. For good stage noise performance, resistor R7 must be kept at a size which is in the same order of magnitude as the resistance of the cartridge (typically 500R to 1K, as we've already said). Since this resistor, in combination with the feedback network, sets the stage gain at any nominal reference frequency, we are further restricted in the size of capacitor which we can use. Small capacitors mean having larger resistors to achieve the same time constant. This provides greater gain and might be undesirable).

Many designs use simple, four component-style networks. The time constants specified CANNOT be achieved accurately with single,

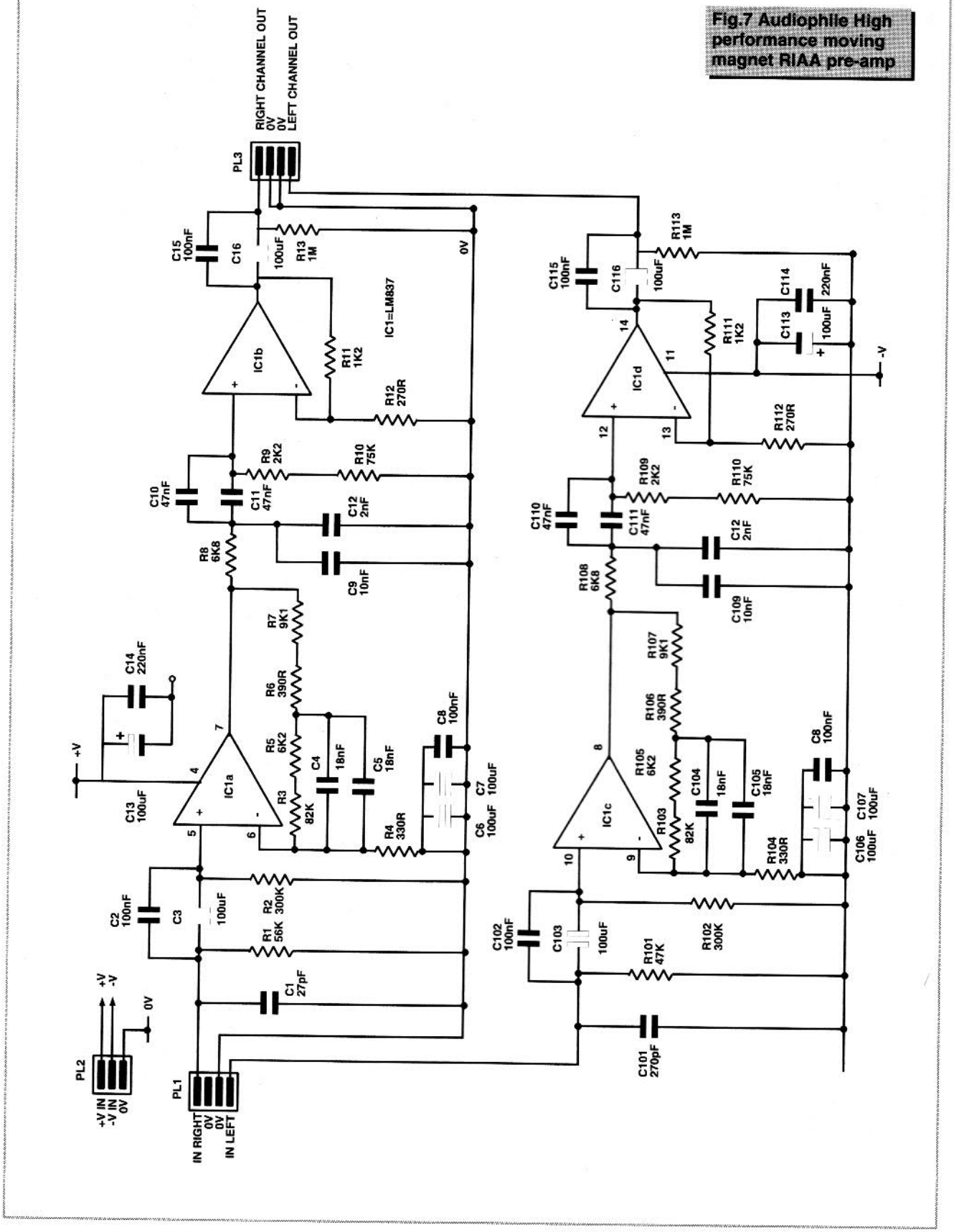


**Fig.7 Audiophile High performance moving magnet RIAA pre-amp**

preferred values, and to achieve any type of performance, with regard to good amplitude response, requires the use of additional series or parallel elements in the network. For the sake of perhaps two or three extra components, I cannot see why this approach is not more widespread. Some of the amplitude errors caused by inaccurate time-constant values can be corrected by the use of simple tone controls (if fitted), whilst others in the midrange cannot. It is undesirable to have to alter tone control settings when changing from one signal source to the other on the preamp.

## Nuances of the Design

The electrolytics have been bypassed since improperly-used polarised electrolytics can cause distortion because, despite proper biasing for DC, AC signals can reverse-bias the capacitor and produce distortion. The is caused by the diode effect apparent

## The Works

### AudioPhile RIAA (DIN) Phono Equaliser

For the sake of clarity, only components in the left channel will be referred to. The moving magnet cartridge is shunted by the 47K resistance of R1 and the 270p capacitance of C1. These are both arbitrary values and can be altered to suit the particular cartridge being used. C3 provides a DC block so that no DC from the input circuitry can pass to the cartridge and damage it, while C2 bypasses the electrolytic for reasons given in the main text. Resistor R2 determines the input impedance of this part of the circuit.

Two of the breakpoints on the curve are provided by the CR network - comprised of R3, and R5-7, and C4,5 - enclosed within the feedback loop of the first op-amp. The first breakpoint, at 318us, is provided by C10, 11 and R5+R6// R7+R8. The use of two resistors in the parallel network allows very close agreement between specified and actual breakpoints. The second breakpoint, at 3180us, is provided by C10, 11 and R7+R8. Again, the use of more than one resistor in this leg of the network allows us to adhere closely to the specified breakpoint. Midrange gain - at an arbitrary reference frequency of 1KHz - is set by the ratio of the impedance of the network at this frequency (which equates to ) to resistor R4, and calculates to around . Capacitors C6//C7//C8 roll off gain below about 3Hz and so stop any DC or subsonic frequencies present at the op-amp input from being amplified and passed to the next stage.

Capacitor/resistor ratios are kept such that large values of capacitance are avoided, since precision capacitors - close tolerance polystyrene or polypropylene types - are available only in values up to about 47n (where they are so bulky as to be unusable on a compact board such as in the example here).

The third breakpoint, at 75us, is provided by a passive CR network comprised of C9 and R8. As this stage is followed by another network providing the fourth breakpoint at 7960us, resistor values are scaled such that interaction between the two is avoided. In practise, this means at least a 10:1 ratio, with absolute values chosen so that capacitances of C9 and C10 translate to sensible values ie not too large or too small. The use of a passive network to generate the 2122Hz breakpoint means that stage gain can asymptote to zero at some infinitesimally high frequency, rather than to unity, as is usual with series feedback arrangements. Fidelity at high frequencies is thus assured in this design.

The second quarter of the op-amp package provides the final gain - 6.2 or approximately 16dB - which brings a cartridge input signal in the order of 3.5 to 4mV up to a standard 775mV at the output.

There is comprehensive decoupling of the supply rails, with electrolytics bypassed by polyester-type capacitors.

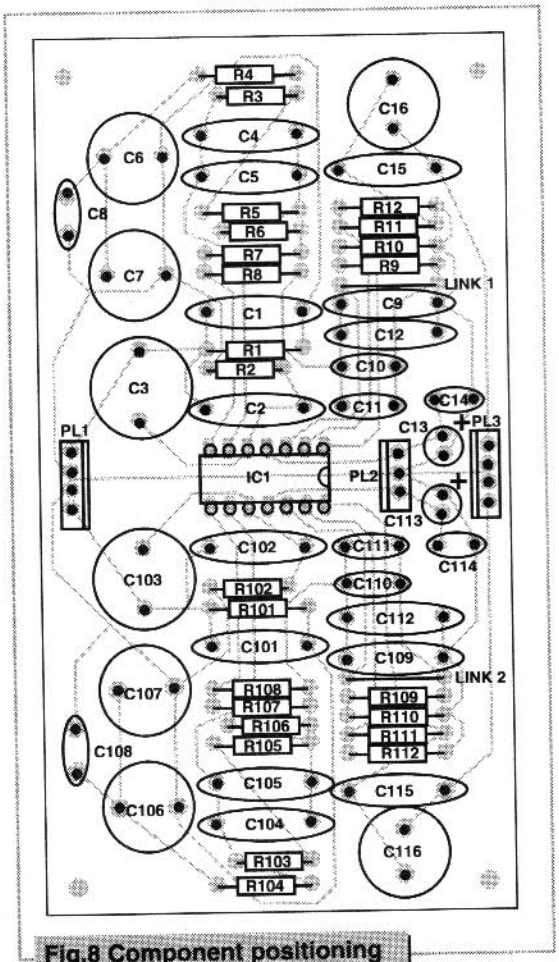


**Fig.8 Component positioning**

when the electrolytic is in this condition. Furthermore, inductances internal to the capacitor can become significant at the lower impedances prevalent in solid state design, to the extent that high frequency response can be affected because of rising capacitor impedance at these frequencies. Bypassing the electrolytic with a lower value, lower ESR, high performance type can alleviate some problems.

The Cerafine type of electrolytic should be fitted, since they have an equivalent series resistance (ESR) and is half that of the traditional electrolytic. If not then non-polarised or high frequency types should be fitted in their place.

A very high quality quad op-amp features at the heart of the design. It shares the same pin outs as other quad op-amp packages such as the LM324 and the TL074, but there the similarity ends. It is better by a huge order of magnitude in all the areas important for audio work. These include slew rate (10μV/s), noise (4.5nV/√Hz), GBP (Gain Bandwidth Product of 25MHz), distortion (better than 0.0015% from 20Hz to 20KHz) and output load driving capability (40mA into a 600R load).

## Construction

Construction is straightforward once you have decided what version is to be made. Components are inserted and soldered in order of ascending size, with resistors and wire links first, followed by IC sockets and small capacitors. R1 and C7 can be left as they are or altered in value as per the cartridge manufacturer's instructions/ specifications. Move on to the bulkier parts like the large value polystyrene and radial electrolytics, ensuring of course that polarity conscious types are inserted correctly with regard to orientation and finish with the right-angled PCB plug. This can be dispensed with, and replaced by Veropins if the constructor so desires. The IC used isn't particularly static-sensitive, but care should be exercised insofar as it should not be inserted until the correct supply voltages have been measured on the appropriate IC socket pins. As far as the supply rails are concerned, any split supply, from about 9V upwards can be used. Remember there is a corresponding loss of headroom at the lower supply voltages. The circuit was originally designed for a large audio mixer, hence the unusual rail voltages quoted. The module should be grounded to the system star earth of the equipment it is fitted in, and the input connections made via screened lead and terminated in good quality,gold-plated phono plugs or similar. The outputs also should be

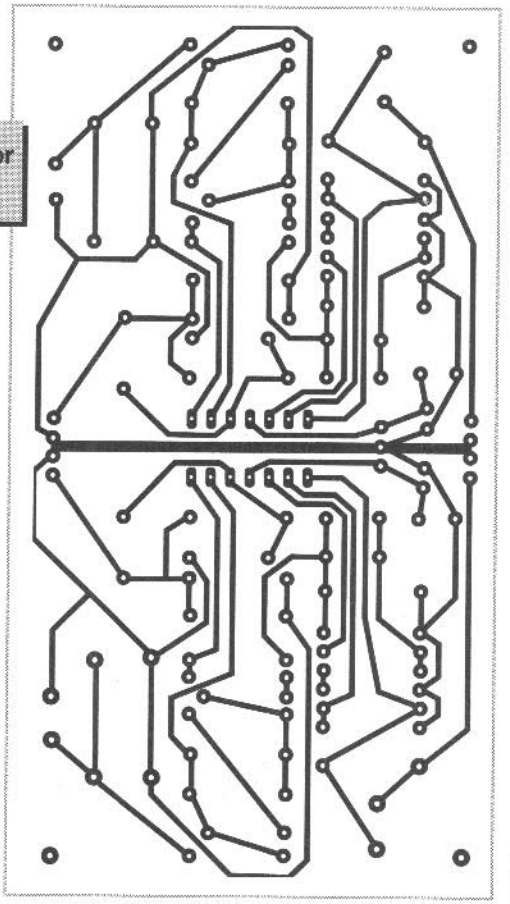

PCB Foil for pre-amp

## Parts

**Resistors**
(1/4watt metal film)

| | |
|---|---|
| R1,101 | 56K (or in accordance with cartridge manufacturer's recommendations) |
| R2,102 | 300K |
| R3,103 | 82K |
| R4,104 | 330R |
| R5,105 | 6K2 |
| R6,106 | 390R |
| R7,107 | 9K1 |
| R8,108 | 6K8 |
| R9,109 | 2K2 |
| R10,110 | 75K |
| R11,111 | 1K2 |
| R12,112 | 270R |
| R13,113 | 1M |

**Semiconductors**

| | |
|---|---|
| IC1 | LM837 |

**Additional Items**

| | |
|---|---|
| PCB | (see page 64) |
| PL1,3 | 4pin minicon plug |
| PL2 | 3pin minicon plug |
| 14 DIL | IC socket |

**Capacitors**

| | |
|---|---|
| C1,101 | 270p 1% polstryrene (or in accordance with manufacturer's recommendations) |
| C2,102,8,108 | 100n polyester |
| C3,103,6,106,7,107 | 100µ/100V non polarised electrolytic |
| C4,104 | 33n 1% polystyrene |
| C5,105 | 3n 1% polystyrene |
| C9,109 | 10n 1% polystyrene |
| C10,110,11,111 | 47n 1% polypropylene |
| C12,112 | 2n 1% polystyrene |

connected to any subsequent pre-amplifier or power amplifier stages using screened lead, with the screen connected only at the module end if the outputs are taken to further circuitry within the same enclosure. This avoids creating a hum loop. Before connecting a cartridge, check for DC on the module input pins. If all is well, connect to a turntable, put on a favourite record, sit back and enjoy.




# TEST and MEASURING INSTRUMENTS

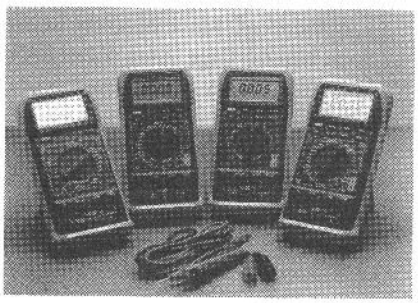

## Multimeters

183, 3.5 digit LCD, DC v, AC V, DC A, AC A, Res, Cont, Hold, Basic Acc 0.5% **£39.50**

185, 3.5 digit as 183 plus bar graph, Temp. Frequency, Max/Min, Edit Basic Acc. 0.3% **£74.50**

187, As 185 but Auto Range **£99.50**

285, As 185 plus 4.5 digit True RMS **£109.50**

## Oscilloscopes

CO 1305, DC to 5MHz Single channel **£185.00**

CS 4025, 20MHz Dual Trace full featured **£359.00**

CS5170 100MHz Dual, Cursor readout **£1245.00**

CS6040 150MHz, 4Channel. Full Featured **£2195.00**

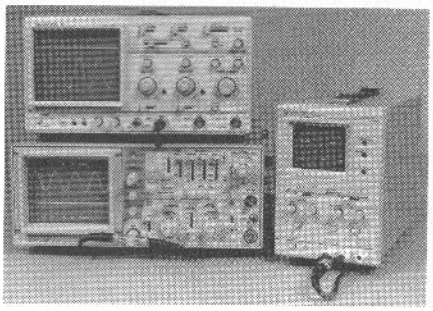

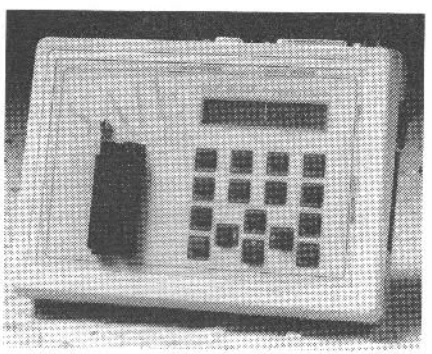

## EPROM Programmer/Emulator

Stand alone or PC hosted.
Fast programming/downloading.
Manufacturer specified algorithms.
Large device support.
Easy to drive.

SP-1000 Programmer/Emulator **£299.00**
4M Bit option **£149.00**
PC Software package **£29.00**

Counters, Generators, Oscilloscopes, Power Supplies, Multimeters, Clamp Meters, LCR Meters Programmers/Emulators, Multi-Instrument, Video and Audio Test Probes and Accessories.

For further information please contact:

SAJE ELECTRONICS

SAJE Electronics (Dept EIA)
117 Lovell Road, Cambridge, CB4 2QW
Tel:(0223) 425440 Fax: (0223) 424711

# POWER AMPLIFIER MODULES-TURNTABLES-DIMMERS-LOUDSPEAKERS-19 INCH STEREO RACK AMPLIFIERS

★ PRICES INCLUDE V.A.T. ★ PROMPT DELIVERIES ★ FRIENDLY SERVICE ★ LARGE (A4) S.A.E., 60p STAMPED FOR CATALOGUE ★

## OMP MOS-FET POWER AMPLIFIERS
HIGH POWER, TWO CHANNEL 19 INCH RACK

**THOUSANDS PURCHASED BY PROFESSIONAL USERS**

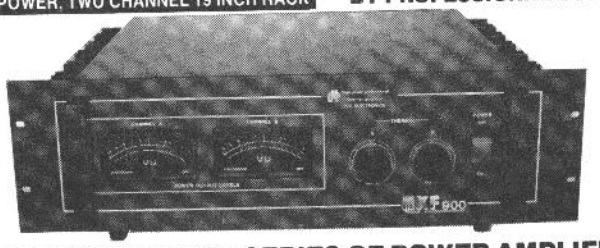

### THE RENOWNED MXF SERIES OF POWER AMPLIFIERS

FOUR MODELS:- **MXF200** (100W + 100W) **MXF400** (200W + 200W) **MXF600** (300W + 300W) **MXF900** (450W + 450W)

**ALL POWER RATINGS R.M.S. INTO 4 OHMS, BOTH CHANNELS DRIVEN**

**FEATURES:** ★Independent power supplies with two toroidal transformers ★ Twin L.E.D. Vu meters ★ Level controls ★ Illuminated on/off switch ★ XLR connectors ★ Standard 775mV inputs ★ Open and short circuit proof ★ Latest Mos-Fets for stress free power delivery into virtually any load ★ High slew rate ★ Very low distortion ★ Aluminium cases ★ MXF600 & MXF900 fan cooled with D.C. loudspeaker and thermal protection.

**USED THE WORLD OVER IN CLUBS, PUBS, CINEMAS, DISCOS ETC.**

**SIZES:-** MXF200 W19"xH3½" (2U)xD11"
MXF400 W19"xH5¼" (3U)xD12"
MXF600 W19"xH5¼" (3U)xD13"
MXF900 W19"xH5¼" (3U)xD14¾"

**PRICES:- MXF200 £175.00 MXF400 £233.85**
**MXF600 £329.00 MXF900 £449.15**
SPECIALIST CARRIER DEL. £12.50 EACH

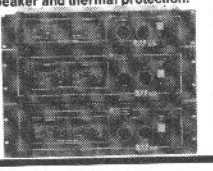

## OMP XO3 STEREO 3-WAY ACTIVE CROSS-OVER

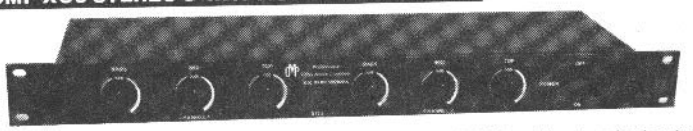

Advanced 3-Way Stereo Active Cross-Over, housed in a 19" x 1U case. Each channel has three level controls: bass, mid & top. The removable front fascia allows access to the programmable DIL switches to adjust the cross-over frequency: Bass-Mid 250/500/800Hz, Mid-Top 1.8/3/5KHz, all at 24dB per octave. Bass invert switches on each bass channel. Nominal 775mV input/output. Fully compatible with OMP rack amplifier and modules.

**Price £117.44 + £5.00 P&P**

## STEREO DISCO MIXER SDJ3400SE ★ ECHO & SOUND EFFECTS★

**STEREO DISCO MIXER** with 2 x 7 band L & R graphic equalisers with bar graph LED Vu meters. **MANY OUTSTANDING FEATURES:- including Echo with repeat & speed control, DJ Mic with talk-over switch, 6 Channels with individual faders plus cross fade, Cue Headphone Monitor. 8 Sound Effects. Useful combination of the following inputs:- 3 turntables (mag), 3 mics, 5 Line for CD, Tape, Video etc.**

**Price £144.99 + £5.00 P&P** SIZE: 482 x 240 x 120mm

## PIEZO ELECTRIC TWEETERS - MOTOROLA

**Join the Piezo revolution!** The low dynamic mass (no voice coil) of a Piezo tweeter produces an improved transient response with a lower distortion level than ordinary dynamic tweeters. As a crossover is not required these units can be added to existing speaker systems of up to 100 watts (more if two are put in series. **FREE EXPLANATORY LEAFLETS ARE SUPPLIED WITH EACH TWEETER.**

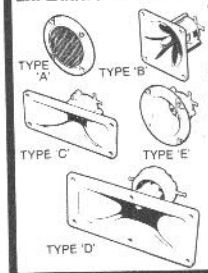


**TYPE 'A' (KSN1036A)** 3" round with protective wire mesh. Ideal for bookshelf and medium sized Hi-Fi apeakers. **Price £4.90 + 50p P&P.**
**TYPE 'B' (KSN1005A)** 3½" super horn for general purpose speakers, disco and P.A. systems etc. **Price £5.99 + 50p P&P.**
**TYPE 'C' (KSN1016A)** 2"x5" wide dispersion horn for quality Hi-Fi systems and quality discos etc. **Price £6.99 + 50p P&P.**
**TYPE 'D' (KSN1025A)** 2"x6" wide dispersion horn. Upper frequency response retained extending down to mid-range (2KHz). Suitable for high quality Hi-Fi systems and quality discos. **Price £9.99 + 50p P&P.**
**TYPE 'E' (KSN1038A)** 3¾" horn tweeter with attractive silver finish trim. Suitable for Hi-Fi monitor systems etc. **Price £5.99 + 50p P&P.**
**LEVEL CONTROL** Combines, on a recessed mounting plate, level control and cabinet input jack socket. 85x85mm. **Price £4.10 + 50p P&P.**

## ibl FLIGHT CASED LOUDSPEAKERS

A new range of quality loudspeakers, designed to take advantage of the latest speaker technology and enclosure designs. Both models utilize studio quality 12" cast aluminium loudspeakers with factory fitted grilles, wide dispersion constant directivity horns, extruded aluminium corner protection and steel ball corners, complimented with heavy duty black covering. The enclosures are fitted as standard with top hats for optional loudspeaker stands.

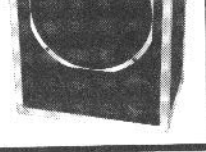

**POWER RATINGS QUOTED IN WATTS RMS FOR EACH CABINET**
**FREQUENCY RESPONSE FULL RANGE 45Hz - 20KHz**

***ibl* FC 12-100WATTS (100dB) PRICE £159.00 PER PAIR**
***ibl* FC 12-200WATTS (100dB) PRICE £175.00 PER PAIR**

SPECIALIST CARRIER DEL. £12.50 PER PAIR

**OPTIONAL STANDS PRICE PER PAIR £49.00**
Delivery £6.00 per pair

## IN-CAR STEREO BOOSTER AMPS

**PRICES: 150W £49.99 250W £99.99**
**400W £109.95 P&P £2.00 EACH**

**THREE SUPERB HIGH POWER CAR STEREO BOOSTER AMPLIFIERS**
150 WATTS (75 + 75) Stereo, 150W Bridged Mono
250 WATTS (125 + 125) Stereo, 250W Bridged Mono
400 WATTS (200 + 200) Stereo, 400W Bridged Mono
**ALL POWERS INTO 4 OHMS**
**Features:**
★ Stereo, bridgable mono ★ Choice of high & low level inputs ★ L & R level controls ★ Remote on-off ★ Speaker & thermal protection.

POSTAL CHARGES PER ORDER £1.00 MINIMUM. OFFICIAL ORDERS FROM SCHOOLS, COLLEGES, GOVT. BODIES, PLCs ETC. PRICES INCLUSIVE OF V.A.T. SALES COUNTER. VISA AND ACCESS ACCEPTED BY POST, PHONE OR FAX.

BARCLAYCARD VISA

## OMP MOS-FET POWER AMPLIFIER MODULES

**SUPPLIED READY BUILT AND TESTED.**

These modules now enjoy a world-wide reputation for quality, reliability and performance at a realistic price. Four models are available to suit the needs of the professional and hobby market i.e. Industry, Leisure, Instrumental and Hi-Fi etc. When comparing prices, NOTE that all models include toroidal power supply, integral heat sink, glass fibre P.C.B. and drive circuits to power a compatible Vu meter. All models are open and short circuit proof.

### THOUSANDS OF MODULES PURCHASED BY PROFESSIONAL USERS

**OMP/MF 100 Mos-Fet** Output power 110 watts R.M.S. into 4 ohms, frequency response 1Hz - 100KHz -3dB, Damping Factor >300, Slew Rate 45V/uS, T.H.D. typical 0.002%, Input Sensitivity 500mV, S.N.R. -110 dB. Size 300 x 123 x 60mm.
**PRICE £40.85 + £3.50 P&P**

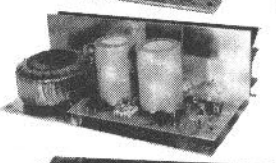

**OMP/MF 200 Mos-Fet** Output power 200 watts R.M.S. into 4 ohms, frequency response 1Hz - 100KHz -3dB, Damping Factor >300, Slew Rate 50V/uS, T.H.D. typical 0.001%, Input Sensitivity 500mV, S.N.R. -110 dB. Size 300 x 155 x 100mm.
**PRICE £64.35 + £4.00 P&P**

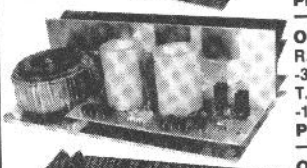

**OMP/MF 300 Mos-Fet** Output power 300 watts R.M.S. into 4 ohms, frequency response 1Hz - 100KHz -3dB, Damping Factor >300, Slew Rate 60V/uS, T.H.D. typical 0.001%, Input Sensitivity 500mV, S.N.R. -110 dB. Size 330 x 175 x 100mm.
**PRICE £81.75 + £5.00 P&P**

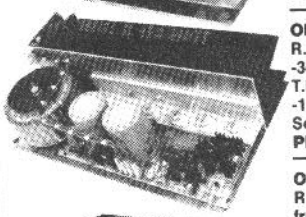

**OMP/MF 450 Mos-Fet** Output power 450 watts R.M.S. into 4 ohms, frequency response 1Hz - 100KHz -3dB, Damping Factor >300, Slew Rate 75V/uS, T.H.D. typical 0.001%, Input Sensitivity 500mV, S.N.R. -110 dB, Fan Cooled, D.C. Loudspeaker Protection, 2 Second Anti-Thump Delay. Size 385 x 210 x 105mm.
**PRICE £132.85 + £5.00 P&P**

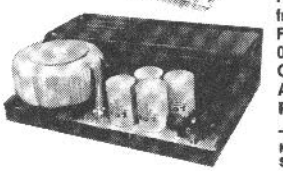

**OMP/MF 1000 Mos-Fet** Output power 1000 watts R.M.S. into 2 ohms, 725 watts R.M.S. into 4 ohms, frequency response 1Hz - 100KHz -3dB, Damping Factor >300, Slew Rate 75V/uS, T.H.D. typical 0.002%, Input Sensitivity 500mV, S.N.R. -110 dB, Fan Cooled, D.C. Loudspeaker Protection, 2 Second Anti-Thump Delay. Size 422 x 300 x 125mm.
**PRICE £259.00 + £12.00 P&P**

**NOTE: MOS-FET MODULES ARE AVAILABLE IN TWO VERSIONS: STANDARD - INPUT SENS 500mV, BAND WIDTH 100KHz. PEC (PROFESSIONAL EQUIPMENT COMPATIBLE) - INPUT SENS 775mV, BAND WIDTH 50KHz. ORDER STANDARD OR PEC.**

## LOUDSPEAKERS

**LARGE SELECTION OF SPECIALIST LOUDSPEAKERS AVAILABLE, INCLUDING CABINET FITTINGS, SPEAKER GRILLES, CROSS-OVERS AND HIGH POWER, HIGH FREQUENCY BULLETS AND HORNS, LARGE (A4) S.A.E. (60p STAMPED) FOR COMPLETE LIST.**

**McKenzie and Fane Loudspeakers are also available.**

## EMINENCE:- INSTRUMENTS, P.A., DISCO, ETC

**ALL EMINENCE UNITS 8 OHMS IMPEDANCE**

**8" 100 WATT R.M.S. ME8-100** GEN. PURPOSE, LEAD GUITAR, EXCELLENT MID, DISCO. RES. FREQ. 72Hz, FREQ. RESP. TO 4KHz, SENS 97dB. **PRICE £32.71 + £2.00 P&P**

**10" 100 WATT R.M.S. ME10-100** GUITAR, VOCAL, KEYBOARD, DISCO, EXCELLENT MID. RES. FREQ. 71Hz, FREQ. RESP. TO 7KHz, SENS97dB. **PRICE £33.74 + £2.50 P&P**

**10" 200 WATT R.M.S. ME10-200** GUITAR, KEYB'D, DISCO, VOCAL, EXCELLENT HIGH POWER MID. RES. FREQ. 65Hz, FREQ. RESP. TO 3.5KHz, SENS 99dB. **PRICE £43.47 + £2.50 P&P**

**12" 100 WATT R.M.S. ME12-100LE** GEN. PURPOSE, LEAD GUITAR, DISCO, STAGE MONITOR. RES.FREQ. 49Hz, FREQ. RESP. TO 6KHz, SENS 100dB. **PRICE £35.64 + £3.50 P&P**

**12" 100 WATT R.M.S. ME12-100LT** (TWIN CONE) WIDE RESPONSE, P.A., VOCAL, STAGE MONITOR. RES. FREQ 42Hz, FREQ. RESP. TO 10KHz, SENS 98dB. **PRICE £36.67 + £3.50 P&P**

**12" 200 WATT R.M.S. ME12-200** GEN. PURPOSE, GUITAR, DISCO, VOCAL, EXCELLENT MID. RES. FREQ. 58Hz, FREQ. RESP. TO 6KHz, SENS 98dB. **PRICE £46.71 + £3.50 P&P**

**12" 300 WATT R.M.S ME12-300GP** HIGH POWER BASS, LEAD GUITAR, KEYBOARD, DISCO ETC. RES. FREQ. 47Hz, FREQ. RESP. TO 5KHz, SENS 103dB. **PRICE £70.19 + £3.50 P&P**

**15" 200 WATT R.M.S. ME15-200** GEN. PURPOSE BASS, INCLUDING BASS GUITAR. RES. FREQ. 46Hz, FREQ. RESP. TO 5KHz, SENS 99dB. **PRICE £50.72 + £4.00 P&P**

**15" 300 WATT R.M.S. ME15-300** HIGH POWER BASS, INCLUDING BASS GUITAR. RES. FREQ. 39Hz, FREQ. RESP. TO 3KHz, SENS 103dB. **PRICE £73.34 + £4.00 P&P**

## EARBENDERS:- HI-FI, STUDIO, IN-CAR, ETC

**ALL EARBENDER UNITS 8 OHMS** (Except EB8-50 & EB10-50 which are dual impedance tapped @ 4 & 8 ohm)

**BASS, SINGLE CONE, HIGH COMPLIANCE, ROLLED SURROUND**

**8" 50watt EB8-50** DUAL IMPEDENCE, TAPPED 4/8 OHM BASS, HI-FI, IN-CAR. RES. FREQ. 40Hz, FREQ. RESP. TO 7KHz SENS 97dB. **PRICE £8.90 + £2.00 P&P**

**10" 50WATT EB10-50** DUAL IMPEDENCE, TAPPED 4/8 OHM BASS, HI-FI, IN-CAR. RES. FREQ. 40Hz, FREQ. RESP. TO 5KHz, SENS. 99dB. **PRICE £13.65 + £2.50 P&P**

**10" 100WATT EB10-100** BASS, HI-FI, STUDIO. RES. FREQ. 35Hz, FREQ. RESP. TO 3KHz, SENS 96dB. **PRICE £30.39 + £3.50 P&P**

**12" 100WATT EB12-100** BASS, STUDIO, HI-FI, EXCELLENT DISCO. RES. FREQ. 26Hz, FREQ. RESP. TO 3 KHz, SENS 93dB. **PRICE £42.12 + £3.50 P&P**

**FULL RANGE TWIN CONE, HIGH COMPLIANCE, ROLLED SURROUND**

**5¼" 60WATT EB5-60TC** (TWIN CONE) HI-FI, MULTI-ARRAY DISCO ETC. RES. FREQ. 63Hz, FREQ. RESP. TO 20KHz, SENS 92dB. **PRICE £9.99 + £1.50 P&P**

**6½" 60WATT EB6-60TC** (TWIN CONE) HI-FI, MULTI-ARRAY DISCO ETC. RES. FREQ. 38Hz, FREQ. RESP. TO 20KHz, SENS 94dB. **PRICE £10.99 + 1.50 P&P**

**8" 60WATT EB8-60TC** (TWIN CONE) HI-FI, MILTI-ARRAY DISCO ETC. RES. FREQ. 40Hz, FREQ. RESP. TO 18KHz, SENS 89dB. **PRICE £12.99 + £1.50 P&P**

**10" 60WATT EB10-60TC** (TWIN CONE) HI-FI, MULTI ARRAY DISCO ETC. RES. FREQ. 35Hz, FREQ. RESP. TO 12KHz, SENS 98dB. **PRICE £16.49 + £2.00 P&P**

## TRANSMITTER HOBBY KITS

**PROVEN TRANSMITTER DESIGNS** INCLUDING GLASS FIBRE PRINTED CIRCUIT BOARD AND HIGH QUALITY COMPONENTS COMPLETE WITH CIRCUIT AND INSTRUCTIONS

**3W TRANSMITTER** 80-108MHz, VARICAP CONTROLLED PROFESSIONAL PERFORMANCE, RANGE UP TO 3 MILES, SIZE 38 x 123mm, SUPPLY 12V @ 0.5AMP.
**PRICE £14.85 + £1.00 P&P**

**FM MICRO TRANSMITTER** 100-108MHz, VARICAP TUNED, COMPLETE WITH VERY SENS FET MIC, RANGE 100-300m, SIZE 56 x 46mm, SUPPLY 9V BATTERY.
**PRICE £8.80 + £1.00 P&P**

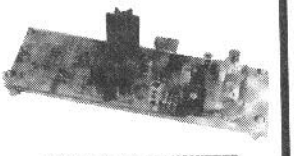

PHOTO: 3W FM TRANSMITTER

# B.K. ELECTRONICS

UNITS 1 & 5 COMET WAY, SOUTHEND-ON-SEA, ESSEX. SS2 6TR.
Tel.: 0702 - 527572 Fax.: 0702 - 420243

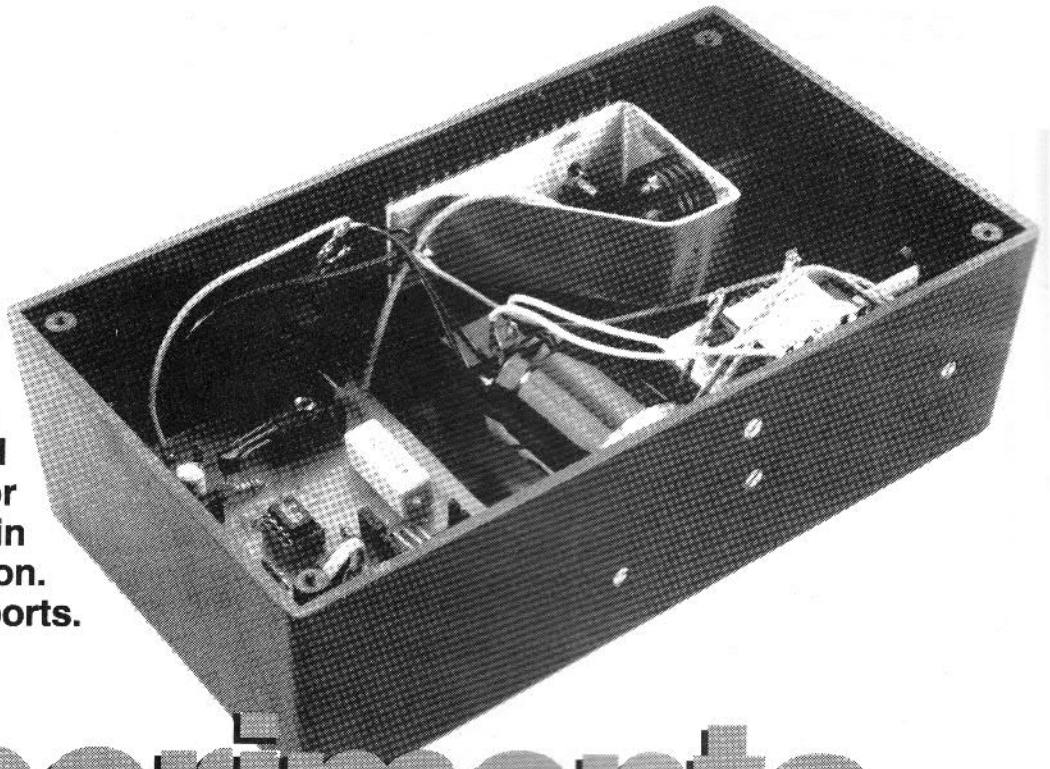

**To our knowledge this experimental semiconductor LASER is a first in home construction. David Silvester reports.**

# Experiments in the LASER Zone

LASERs are now all around us, not the stuff of science fiction but actual devices working for people in homes and work places. As the cost of them has dropped so the number of applications has increased, and so CD players and barcode readers at the supermarket check-out would not be possible without them. The author now felt it was high time to look at some form of LASER for the experience and as a precursor to the construction of other instruments using the LASER source. Such a simple device may be used for school science projects on light.

**LASER is an acronym but shall hereafter be generically called laser**

I began by comparing the conventional gas discharge laser device with the solid state equivalent.

Gas discharge lasers need high voltages, around 8kV to strike the tube so extreme caution is required in both their construction and testing. Also they tend to be large but their advantages of a visible light output and very little beam divergence has to be considered.

The cheapest laser diodes are those made for infra-red radiation say for example in the CD player but are of little use for experimentation as you can't see the output directly. However, they have a lot of advantages, they are very small and operate using low voltage power. So the search was on for a visible laser diode and at a price that allowed experimentation. It was found in the Toshiba TOLD9200.

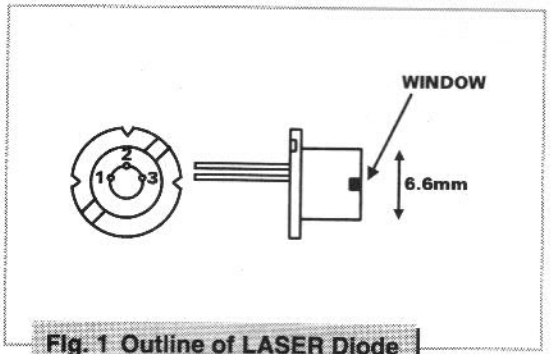


**Fig. 1 Outline of LASER Diode TOLD9200**

## Laser Diode Characteristics

The TOLD9000 series of laser diodes were designed to replace helium-neon gas lasers in many applications and to reduce equipment size, weight and power consumption. Initially employed in bar code readers they are now finding uses in measuring systems and laser pointers. A disadvantage of the laser diode is that the laser beam diverges from the package rather than maintaining a narrow beam but it is something that can be corrected by a small lens. The TOLD9200 comes in a metal package resembling the TO5/ TO39 transistor case but with a smaller

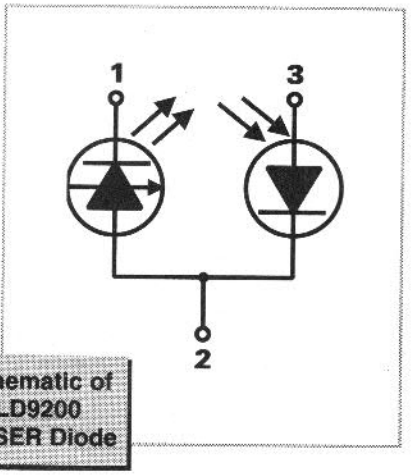


**Fig. 2 Schematic of TOLD9200 LASER Diode**

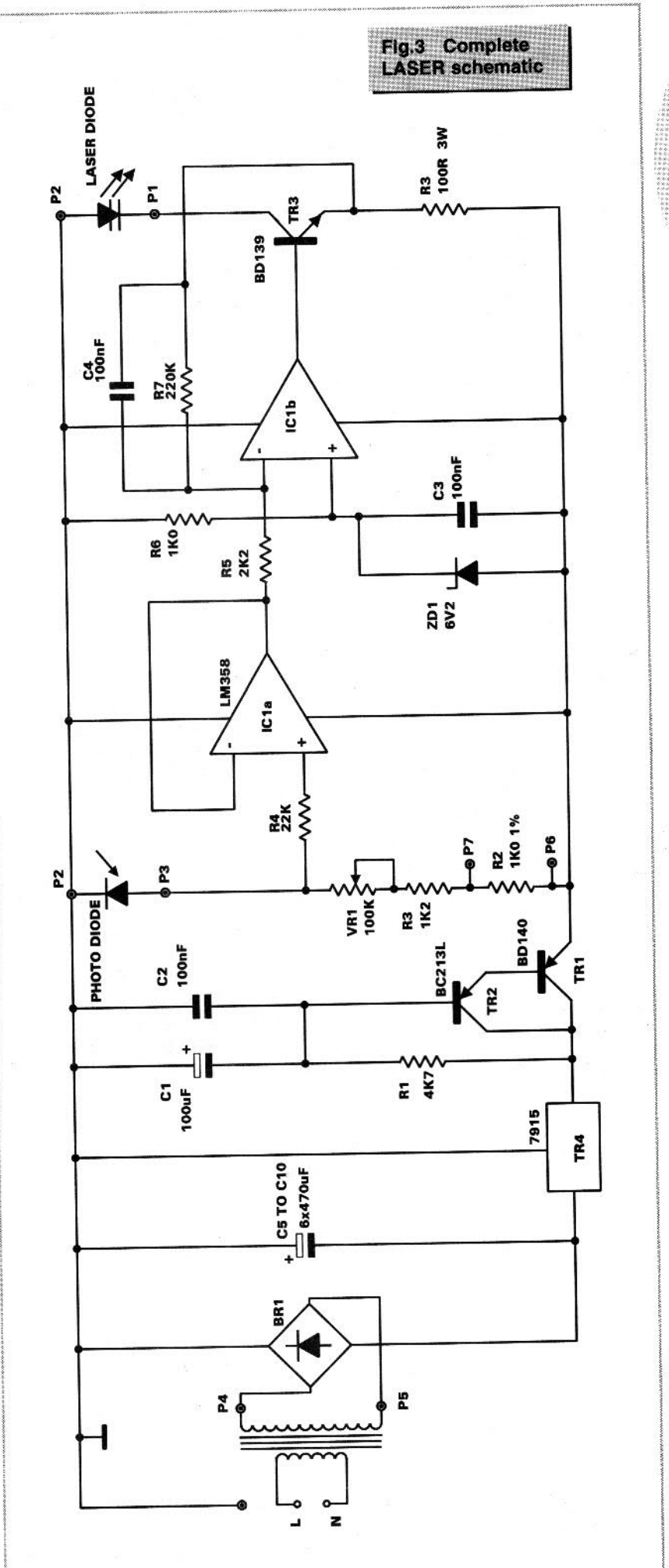


Fig.3 Complete LASER schematic

diameter (Figure 1). The package contains the laser diode itself and a photo diode to monitor the laser's output. Laser diodes are touchy things and require them to pass specific currents for 'laser' operation. Bear in mind, the absolute maximum current through the device means exactly what is says and no more. Also they have very wide tolerances on the lasing current itself. As such all of the manufacturers devices I have looked at have the photodiode looking at the laser's light output and is used to control the current through the device. There are therefore three pins as shown in the schematic (Figure 2), a common terminal for the laser diode anode and

***...not the stuff of science fiction but actual devices working for people in homes and work***

the photodiode cathode and separate terminals for the other anode and cathode. In use it is normal to have the common terminal at ground potential and operate the device with a control circuit between ground and a negative supply. This way the circuit diagram looks normal except that the ground is at the top. It also maintains the laser diode case at ground potential to remove the necessity of electrical isolation between the laser diode and the metal case or supports.

The photo diode monitoring the output works in reverse bias and a current flows through it proportional to the laser's output intensity. Owing to the wide tolerances for both the laser and photodiode, the control circuit needs to be able to set the conditions for the laser/photo diode setup and since few amateurs will have access to a light

output meter, the circuit had to be altered to allow the amateur to set the circuit correctly. All laser diodes are very susceptible to overheating and a good heatsink is needed even though they may only be dissipating 300mW in operation.

Much of what has been said relates to other laser diodes, the pin connections being the main difference. Let us consider the characteristics specific to the TOLD9200 itself. The maximum optical output at 670nm wavelength is 3mW but for reliability this is restricted to 2mW. As soon as current passes through the laser diode, light is given out immediately. Only at a threshold current will the laser diode switch into laser mode and this occurs typically at 70mA and not more than 90mA. At 2mW light output, the photo diode monitor current can vary between 0.15 and 0.7mA with a typical value of 0.45mA. This vast variability of parameters is the biggest headache for the designer but luckily each laser diode comes in a pack with the full details of it's operating characteristics printed on it. In the case of the experimental diode the operating current (Iop) for 2mW output is 60.5mA, and at this output the photodiode gives a monitoring current (Im) of 0.327mA.

## The Control Circuit

The full control circuit as used in the project is shown in Figure 3. In the prototype the control circuit was tested using a benchtop 15V power supply unit and the photograph shows the control PCB with the 15V supply hard wired into the box. This PSU was later added to the board for simplicity of construction by the reader. This circuit is for a fixed light output design, the possibilities of modulation and the use of the laser diode as a line of sight communication device were considered but until some experience had been obtained this idea was shelved.

To the left of the drawing is a standard -15V power supply unit using the 7915 regulator. The reservoir capacitors (C5 to C10) consists of six 470uF/25V electrolytic capacitors in parallel to provide ripple rejection whilst they are still short enough to fit into the box without them having to be fitted on their sides.

C1, C2, R1 and Tr1 and Tr2 provide a slow start up circuit to protect the laser diode from turn on surges. At switch on, C1 is discharged holding the base of the Darlington operating pair Tr1 and Tr2 at ground potential (at the top remember, there is a -15V negative supply at the bottom) and the supply to the following stages close to ground potential. As C1 charges, the Darlington pair turns on and very soon the transistor saturates giving -15V on the lower rail and it's presence may be ignored from then on. For simplicity, the laser diode and photo diode have been split in the schematic, consequently P2 occurs twice in the schematic. The control photodiode is connected to P2 and P3, and has a reverse bias of up to 15V across it. The photo diode passes a current of between 0.15 and 0.7mA with the output of 2mW of light depending on the device supplied. This tolerance allowance causes the greatest problems in the design. According to my laser diode package the laser needs around 60mA to

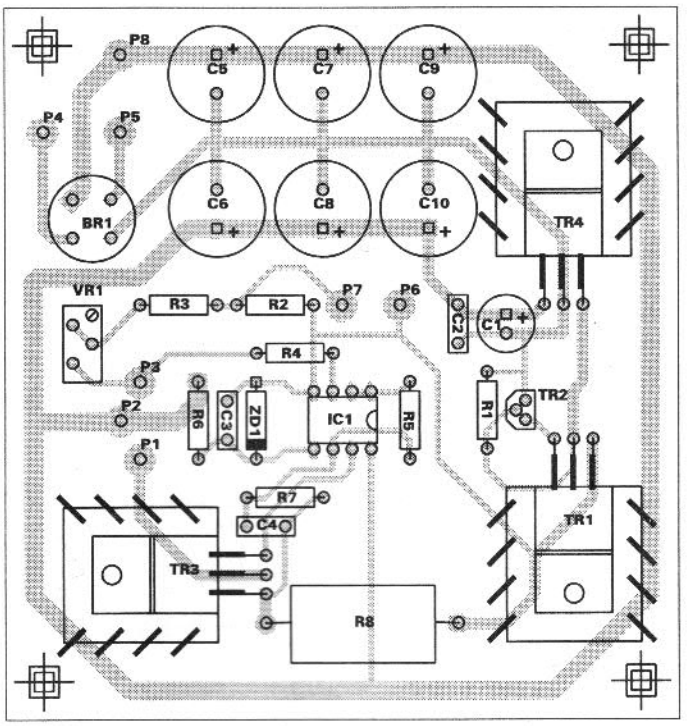


**Fig.3 Component positioning and PCB layout below**

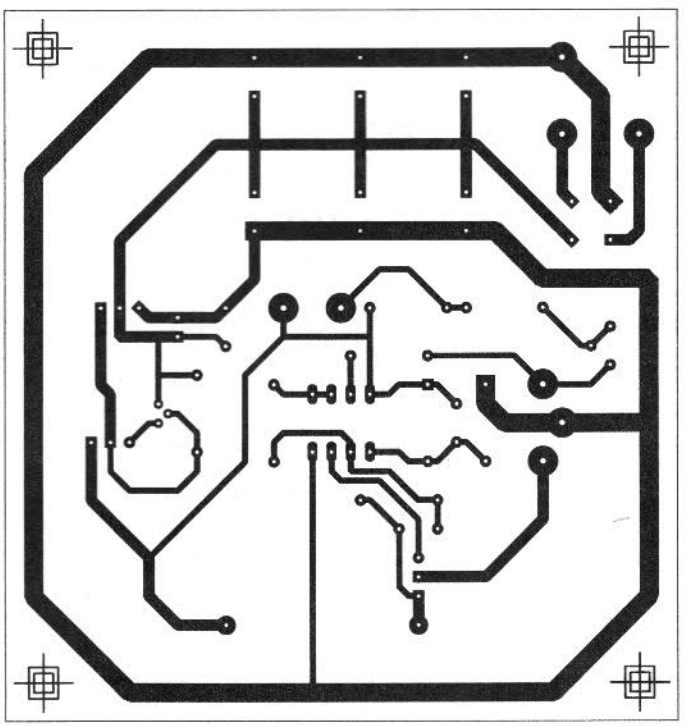

work. Resistor R8 acts as a current limiter and provides a feedback potential proportional to the current through itself and so through Tr3 and the laser diode. In the case of my diode the feedback voltage is 6V approximately. The voltage rating of ZD1 is chosen as close to the feedback voltage as possible, 6.2V in my case. IC1a is a buffer stage only, but for correct operation of the control section around IC1b, it needs to output 6.2V to match the zener voltage which means it will have 6.2V on it's input as well. This 6.2V input comes from the photo diode current passing through the resistor chain of VR1, R2 and R3. Let us cover R2 first. R2, a 1K0 1% resistor provides a monitoring point for the photo diode current. Since we do not have a light meter, we have to use the integral

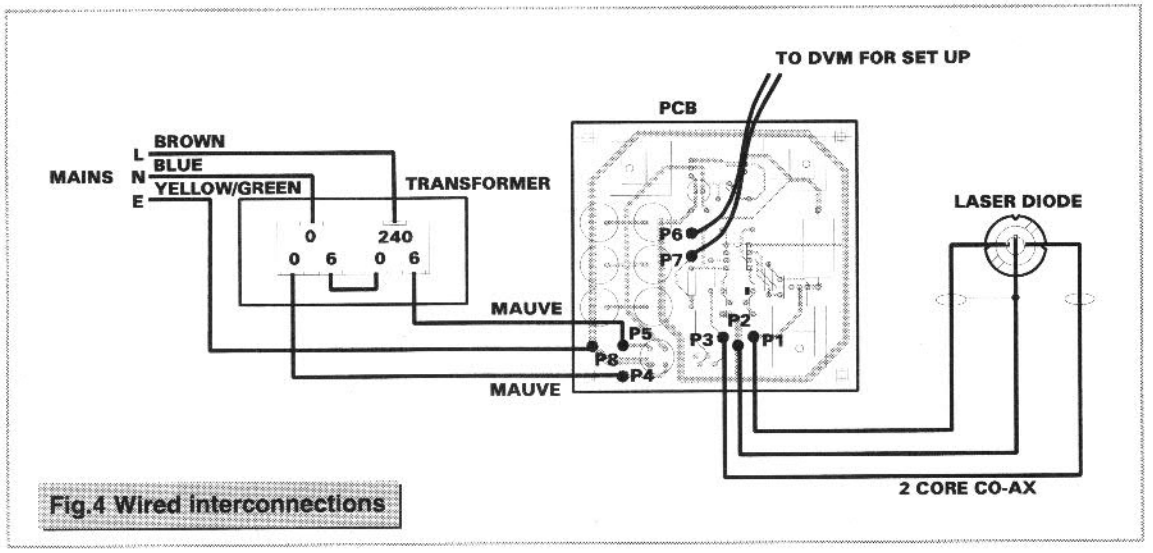


Fig.4 Wired interconnections

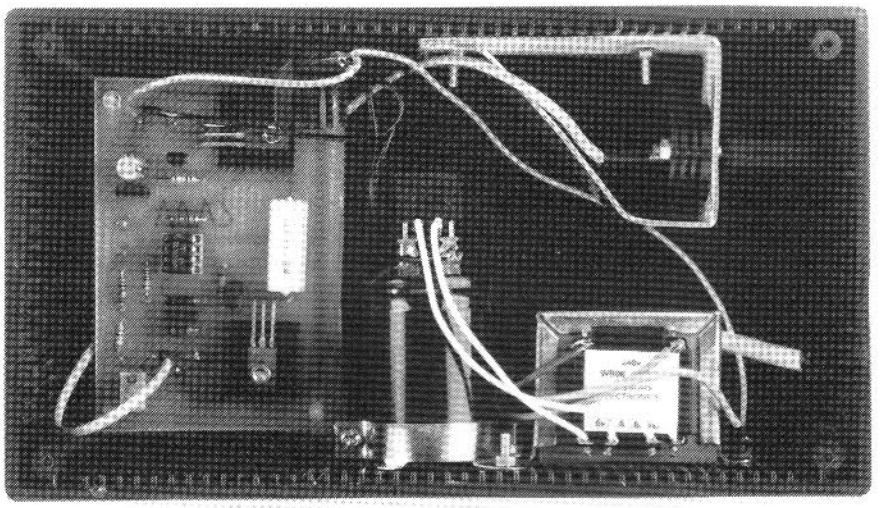

photodiode to measure the light output to allow us to set it to 2mW. Without this, it is easy to 'goodbye' to the laser diode. Setting up procedures will follow later but do not power the circuit until you have checked the initial setting of VR1. There are two ways that you can obtain the values for VR1, R3 and the zener voltage. The simplest is to accept that the circuit will work with any diode and use the values in the parts list, the other as was done in the prototype is to calculate better values from the given diode characteristics. The circuit will use a 6.2V zener diode as ZD1. Given the lasing current (Iop), calculate a value for R8 as 6.2/Iop, the result will be not less than 68.8 ohms with possibly 120 ohms as a top value. There is no minimum lasing current value quoted in the technical data so the upper value of R8 is in doubt. Take the closest preferred value for R8. Assume a low value for VR1 (10K was used) and calculate a value for R3 with a value for VR1 of 5K. This will allow VR1 to be in the centre of it's adjustment. Using ohms law and my 0.327mA photodiode current I get the total value of R2+R3+VR1 as 18.96K ohms. Deducting R2 as 1K and VR1 as 5K this leaves 12.96K and the nearest common value of 12K was chosen. Using the values for the actual photodiode make it difficult to cause damage to the laser by setting it for too much light output. If you think of substituting an alternative IC for IC1 then ensure that it's input operational voltage range includes the negative supply voltage, this is true of only a limited range of IC's.

The remainder of the control circuit is a constant current source whose current feedback loop is via the photodiode monitor. ZD1 is a reference 6.2V. The resistor R8 in the emitter circuit of the control transistor Tr3, provides a feedback voltage proportional to the current through Tr3 and the laser diode. R8 also gives fail safe current limit protection. You may have noticed that for simplicity the off PCB connections to the laser/ photodiode are numbered the same as the connections on the package itself.

## Construction

Before looking at the construction of a laser diode light source I will say something about safety. The laser beam emitted by the diode is harmful if aimed directly into the human eye. NEVER look into the beam under any circumstances whatsoever or direct the laser light at the eyes of any living creature. As such do not let children have access to the unit unless supervised. The laser will not however burn the skin if the beam is directed at it by accident or during construction. Neither the author, editor or publisher can accept any responsibility for accidents that may occur for any reason whatsoever when constructing or using this project.

Start with the PSU section of the control circuit. Make temporary connections for the transformer by soldering a mains cable to the 240V input and ensure there is a connection from the earth wire to the frame of the transformer (Figure 6). Although this figure relates to the PCB connections it may be useful to refer to it here. Add wires for the low voltage AC output and an earth wire. The low voltage side has two windings and these should be in series. Remember this is a temporary set-up and very great care must be taken to prevent accidents. Cover the mains terminals with insulating tape. The off board connections shown as P1 to P8 are 1mm double ended PCB pins

soldered to the lower track and the upper end used for the wires in the case of P1 to P5 and P8 or as connections for a DVM for setting up in the case of P6 and P7. On the control PCB, solder in the bridge rectifier BR1 and the reservoir capacitor bank C5 to C10. Connect the low voltage AC from the transformer to terminals P4 and P5 with the ground connected to P8. Fit a plug to the other end of the mains cable, ensure the fuse is rated at 3A or less then switch on. With a DVM you should find around 18V across the capacitors although it may be higher depending on the transformer's regulation specification. Also confirm the correct polarity for the DC voltage. With the black probe of the DVM connected to the P8 terminal you should get -18V and no positive voltage. If the voltage is much lower than this then either the bridge or one or more of the reservoir caps are the wrong way round. Whatever component caused the problem remove it and throw it away before fitting a new replacement. The offending part is probably damaged and it's failure at a later date could cause the laser diode to be destroyed.

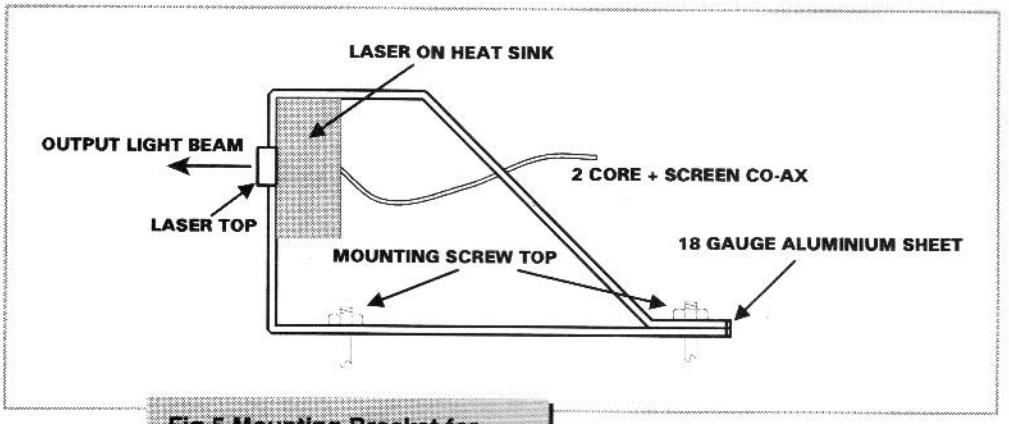


**Fig.5 Mounting Bracket for solid state LASER**

Next comes the laser diode as this needs thermal protection and it is as easy to arrange this first. Take a Redpoint 5C heatsink and remove the screw fitting. Try to fit the laser diode into the hole in the bottom of the heatsink, this is the opposite way round to the normal way of fitting a TO5 transistor but is necessary due to the smaller case of the laser unit. If it fits without forcing, remove it again to attach the leads, if not ream out the hole very slightly until it fits snugly. Take a length of narrow diameter twin core and screen cable and bear back about 25mm of the outer insulation. Pull the screen into a tag and solder together to stop it unwinding. Bear back the centre wires insulation by about 6mm, twist and tin with the soldering iron. Put two pieces of narrow bore heatshrink tubing over the central wires so that the tinned sections just show, then solder the wires to the laser diode with the screen to the central, common terminal that can be seen to be connected to the laser diode case. Push the heatshrink over the laser diode terminals and whilst holding the laser diode carefully in your fingers heat the far end of the tubing to partly shrink it and stop it slipping back and uncovering the laser's terminals. Do not use anything to hold the laser other than your fingers, if your fingers get burnt then the laser diode is getting too hot for safety. Make a note of which colour wire is which connection to the laser and photo diodes. Push the laser diode into the 5C heatsink and screw in the retaining fitting.

The main PCB is easy to construct using Figure 4. Small Redpoint TV4 heatsinks are shown fitted to Tr1 and Tr3 in the PCB layout and are included in the parts list. In use Tr1 has remained cold so it may be OK to leave it out this heatsink. Tr3 becomes vaguely warm so it's heatsink should be retained for reliability. The regulator device Tr4 has a larger TO220 heatsink. R8 is a 3W wire wound component that is vastly over rated to ensure that it remains cool

## Parts

**Resistors** (0.25W metal film unless stated)

| | |
|---|---|
| **R1** | 4K7 |
| **R2** | 1K0 must be 1% tolerance |
| **R3** | 1K2 for all purpose see text for options |
| **R4** | 22K |
| **R5** | 2K2 |
| **R6** | 1K0 may be as R2 but not necessarily 1% tol. |
| **R7** | 220K |
| **R8** | 100R 3W wire wound for all purpose see text for calculated optional values |
| **VR1** | 100K for all purpose but see text for optional use of 10k |

**Capacitors**

| | |
|---|---|
| **C1** | 100µF/25V electrolytic |
| **C2,C3,C4** | 100nF ceramic |
| **C5 to C10** | 470µF/25V electrolytic |

**Semiconductors**

| | |
|---|---|
| **IC1** | LM358 |
| **Tr1** | BD140 |
| **Tr2** | BC213L note non 'L' versions will not work |
| **Tr3** | BD139 |
| **Tr4** | 7915 regulator |
| **Laser** | Toshiba TOLD9200 laser diode |
| **BR1** | W01 100V 1A bridge rectifier |

**Additional Items**

PCB
PCB plastic stand-offs
Redpoint 5C heatsink
Redpoint TV4 heatsink see text for option on second
Aluminium strip 25mm x 300mm in 18 gauge
191 x 108 x 52mm internal ABS plastic box
25mm focal length lens and holder (Maplin)
PCB pins for off board connections
2 core plus screen cable
Small diameter heatshrink tube
6V + 6V 3W transformer
TO220 heatsink for regulator
Miscellaneous wire for connections
Mains cable and securing grommet
Mains plug with at max. 3A fuse and optional 100mA fuse in mains live lead within box

at all times. IC1 can be fitted into a socket if desired but it is a low cost item and a socket can cost more than the device itself.

## Initial Testing

Bear back the wires of the other end of the laser/photo diode and solder the central connection to P2, the laser diode cathode to P1 and the photodiode anode to P3. If you did not make a note of the colour of the wires fitted to the laser diode check the colours now! Connect the DVM, set on a resistance range, across VR1 and set it to the highest value possible. Then clip the DVM probes across P6 and P7 and set it to a range that will best display the required voltage across R2. Power up the board. After a second the laser diode should light up and a reading be obtained on the DVM. Turn the adjuster on VR1 to obtain the required voltage value on the DVM. This will give an output of 2mW of laser light.

## Boxing the Laser

I doubt that you will want to leave the laser in that state, the provision of a lens to correct the laser diodes light divergence was my first priority. There was no attempt to make the unit as small as possible, in fact for the prototype the larger the better was the rule. Dismantle the PCB from the laser diode. I first built a mounting bracket for the laser and it's heatsink as shown in Figure 5. This was made from 18 gauge aluminium sheet from which a 25mm strip was cut about 300mm long. At 70mm from one end the strip was bent by 90 degrees followed by another bend at a further 45mm. At the upper end three holes were drilled two for the fixing screws of the laser's heatsink and a central one for the end of the laser unit. Once the laser heatsink was fitted, the rest of the strip was bent to the shape in Figure 5. A 25mm focal length lens and holder were obtained from Maplin to bring the laser beam into sharp focus. The laser mounting bracket was fitted into a plastic case (see parts) with exactly 30mm between the outside of the case and the face of the laser diode. With the laser beam on, it is simple to find the point of greatest intensity and mark that point in the case. Next remove the laser and drill a marker hole from the inside of the box followed by drilling and reaming from the outside so that the lens holder is a tight fit. Remove the holder and insert the lens which in the authors case was found to be hard to push into place and needed a spot of glue to secure it. Fit laser back in the box and with no power on, look at the laser diode through the hole that you have made for the lensholder. Remember with an unpowered laser diode, you are safe. You should see the central window of the laser diode in the centre of the hole. Much more likely is that the laser diode will be offset and you will need to make the mounting holes in the bracket into slots to centralise the diode. Take this stage slowly as it is crucial to the success of the project. Now introduce the lensholder, pushing it in as far as it will go. The back edge should be parallel to the front face of the laser diode, if not you will need to make further adjustments possibly by elongating the slot for one of the mounting holes. Insert the lensholder, reconnect the laser diode to the PCB and light the laser, focusing the light on a wall by moving the lensholder in and out until a sharp spot is obtained, then tack the lensholder into place with glue.

The laser diode control PCB can be supported on some plastic supports that are stuck into the case. Then follows the transformer mounting and wiring. Simply dismantle the transformer and mount into the case. The mains wire should be secured with a grommet to prevent the wire being pulled out.

## Conclusions

Although visible laser diodes are still expensive they are substantially cheaper than the gas discharge equivalent and worthy of further investigation. The spread of laser light is a problem and can be overcome but the safety of the laser power supply at 15V has much to recommend it. The laser diode is that it is easier to modulate and although this was not included in this prototype there are possibilities in this field. Although having wide tolerances the laser diode has proved easy to handle in practice so other projects can now be considered. What else do you use the laser for? Well that's up to you to exploit the possibilities that exist. Suggestions in writing will be gratefully received at the Electronics in Action office.

**The Laser Diode is a specialised device and if you have difficulty in obtaining one, the author, David Silvester has agreed to make the Toshiba diode available at a cost of £63-90. Cheque with order please and mail order only to: David Sivester, 37 Elliot Rise, Hedge End, Southampton SO3 4RU. Delivery from Japan is in November. This offer closes on 30th November 1993.**

TREMORS

Keeping your ear to the ground is just not enough. Don't miss next months groundbreaking Seismometer. In the November issue of

ELECTRONICS in ACTION

# Anti-Howler

**Take the squeeling out of your PA sound system. A circuit by Andrew Armstrong.**

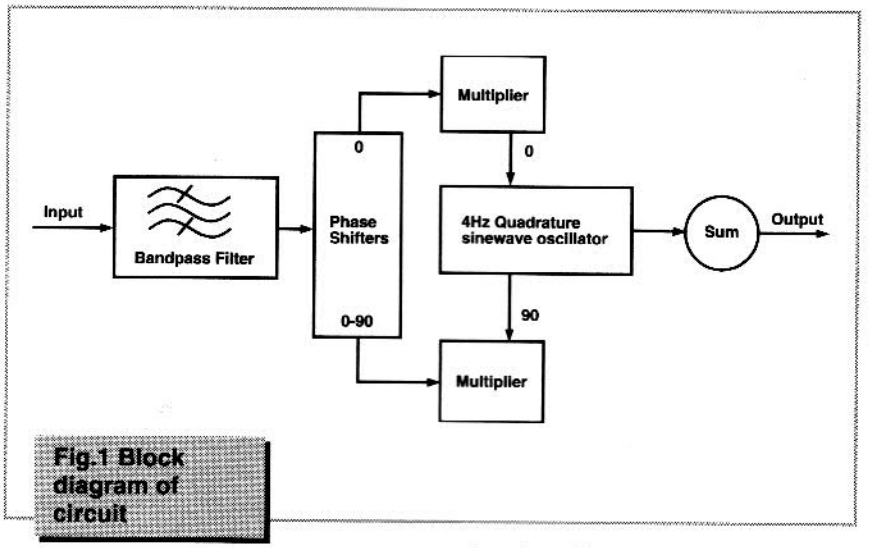


**Fig.1 Block diagram of circuit**

You are live sound engineering for a local band and having difficulty getting enough level on the vocals. You turn up the mic a little bit more, and there is a scream as the noise from the loudspeakers is picked up by the microphone, amplified and fed around again at double the volume. This contributes nothing to the music or to your personal popularity. During the set, the singer moves around and suddenly - skreeet! - deafening feedback makes the singer drop the microphone and the drummer hurls his sticks in disgust at your head.

Alternatively, build this project. Instead of deafening feedback, a slight distortion of the sound, with a faint tweeting noise in the background warns you to turn down the gain. Only the golden-eared brigade will notice the difference, and they've probably wandered into the band bar by accident. If you are lucky the singer buys you a drink afterwards.

That last bit may be wishful thinking - but you really can eliminate the problems of audio feedback almost entirely with this frequency shifter project. The only catch is that it shifts the frequency of the sound, so that people with perfect pitch might be able to hear the difference. Everyone else will thank you for using a frequency shifter, and even perfect eardrums can be damaged by loud feedback.

If you plug this device between your microphone mixer and your amplifier - or in the effects send of the mixing desk if you only need it on one or two channels - it will reduce the level of complaints both from your microphones and your prospective audience. You can also use it on just one microphone if that's what's causing the problem.

The Shifter raises the frequency of the signal from the microphone by approximately 4Hz. So when feedback occurs, the frequency is different by 4Hz each time around the loop. This makes it very difficult for oscillation to set in at a particular frequency. Instead, the sound you hear when the microphone level is too high is like the noise you get when a sudden noise is reflected from a slatted fence - a chirruping sound at a much lower level.

***...it shifts the sound frequency, so only those with perfect pitch, might hear the difference. Tough!***

The shift in frequency makes it sound as if the singer is singing in a slightly higher voice, though not enough for normal ears to distinguish. If one note has a fundamental frequency of 500Hz, and has a harmonic (which gives the note its characteristic sound) at 1500Hz, then what comes out of the frequency shifter will be 504Hz and 1504Hz which are no longer harmonically related. In this case, if a large frequency shift were to be used, speech would sound strange and

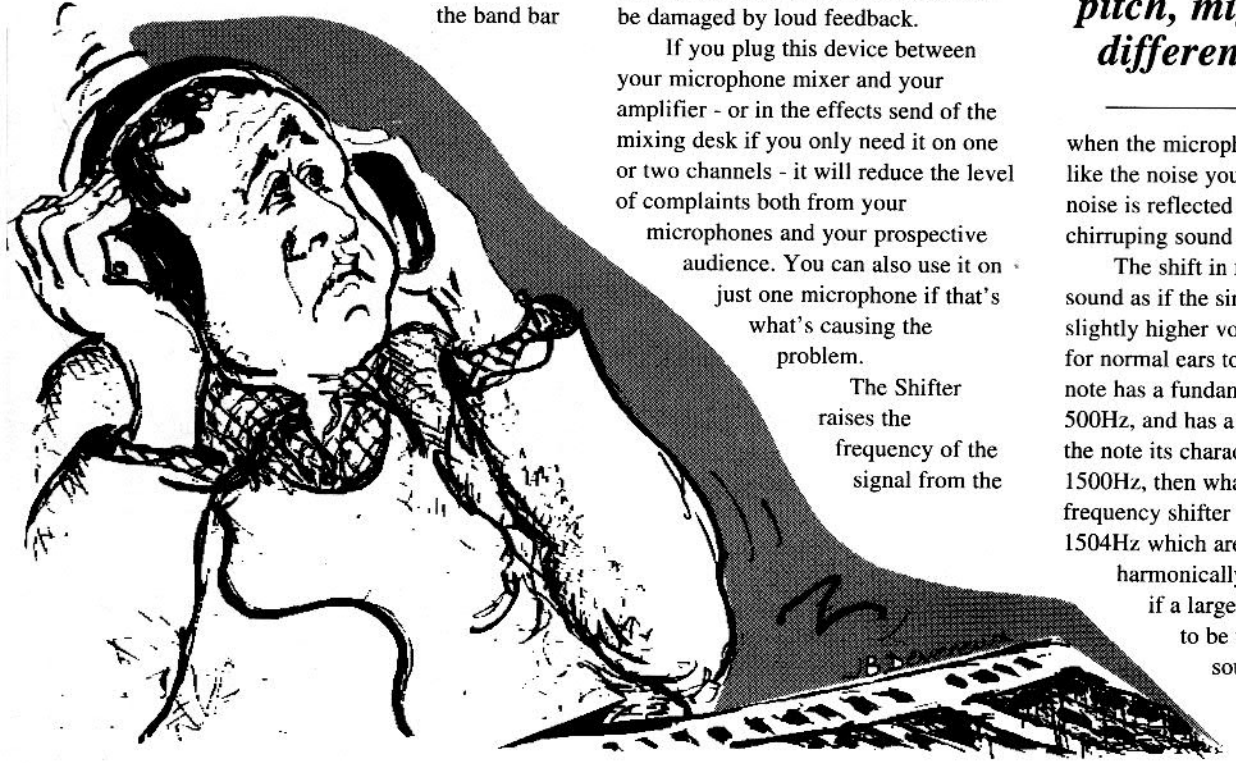

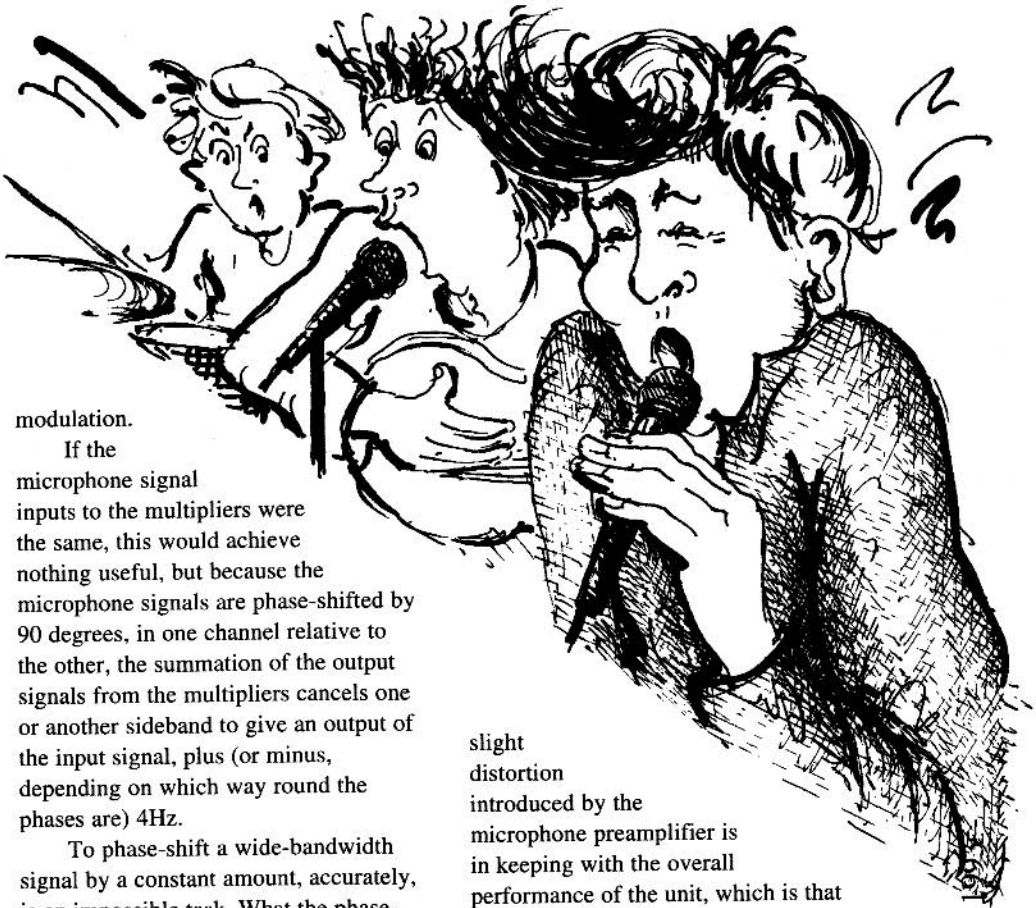

unconvincing (and should be applied forcibly to politicians). A practical maximum shift is therefore around 10Hz, with a minimum effective shift of 4Hz.

## Single Side Band

The method of shifting the frequency is the same as one way of generating a single-sideband radio signal, with a couple of important differences. It uses a 4Hz carrier instead of a radio-frequency carrier, and it doesn't maker your singer sound like Donald Duck.

If only one modulator were used, the output would be a double sideband signal with the two sidebands 4Hz apart, or, putting the same thing into different words, the microphone signal pulsating at 4Hz. Quite a nice effect in its own right, but not what we need here. Instead of this, two amplitude modulators are used, as shown in the block diagram Figure 1. An amplitude modulator effectively multiplies two analogue signals, and in this design linear four-quadrant multipliers are used rather than the type of amplitude modulator common for RF use. The output from each multiplier is the microphone signal modulated by the 4Hz sinewave, but because the 4Hz sinewaves fed to each multiplier are in phase quadrature, the sum of the outputs of both of them contains no amplitude modulation.

If the microphone signal inputs to the multipliers were the same, this would achieve nothing useful, but because the microphone signals are phase-shifted by 90 degrees, in one channel relative to the other, the summation of the output signals from the multipliers cancels one or another sideband to give an output of the input signal, plus (or minus, depending on which way round the phases are) 4Hz.

To phase-shift a wide-bandwidth signal by a constant amount, accurately, is an impossible task. What the phase-shifter in this circuit does is to apply a phase-shift which varies with frequency to each of two outputs. The networks are so arranged that the difference between the two phase-shifts closely approximates 90 degrees over a range of frequencies. Before the phase-shifters is a band-pass filter to prevent the phase-shifters from being fed with signal outside the range over which the phase difference is approximately 90 degrees. A graph of phase shift against frequency for the two networks is shown in Figure 2, which illustrates the frequency range over which these networks can function acceptably.

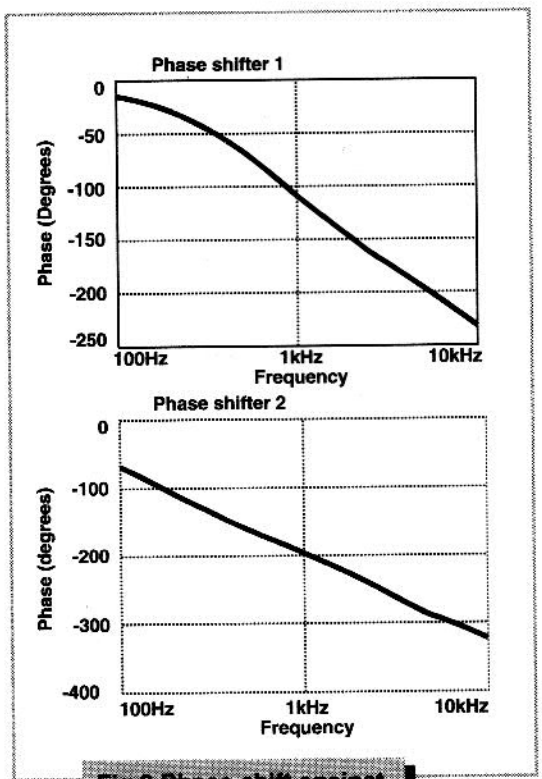


**Fig.2 Phase shift against frequency for the two networks**

As you can see from the circuit in Figure 3, this unit is designed to work at microphone or line levels. It has a line level input, which is designed to work at approximately 500mV RMS, and a microphone preamplifier which can be linked to the line input to allow a microphone to be plugged in directly. The gain asked of the microphone input amplifier is slightly higher than is ideal from the point of view of the op-amps, but the residual distortion caused by this will be mostly outside the passband of the filter on the line input so will not be heard. The other point to consider is that the slight distortion introduced by the microphone preamplifier is in keeping with the overall performance of the unit, which is that of a good but low cost unit, rather than an item for which cost is unimportant.

The input bandpass filter, using IC1, consists of two fairly conventional VCVS (voltage controlled voltage source) filters. The first one of these, a 230Hz lowpass filter, incorporates a voltage gain of approximately 3, to bring the input signal up to a sufficient level to drive the multipliers properly and minimise their contribution to the overall noise level. The second filter is a 7.9kHz highpass filter. This bandwidth should be wide enough for most voice purposes - after all, intelligible speech through a single sideband radio system is normally limited to the range 300Hz to 2.7kHz. This sounds unpleasant, but the output from the Anti Howler doesn't.

The phase shift networks require a unity-gain in-phase drive signal to the top half of the network, and an anti-phase signal of 2.5 times the amplitude to the lower half. The two output signals from the phase shift networks are buffered, to prevent loading from affecting the phase shift, and fed to two multipliers.

The multipliers are made from two halves of an LM13700 trans-conductance amplifier. This device provides an output current dependent upon the bias current fed into the current source, multiplied by the voltage difference between the inverting and non-inverting inputs. In its simplest form, this would give a current-controlled audio gain. What is required

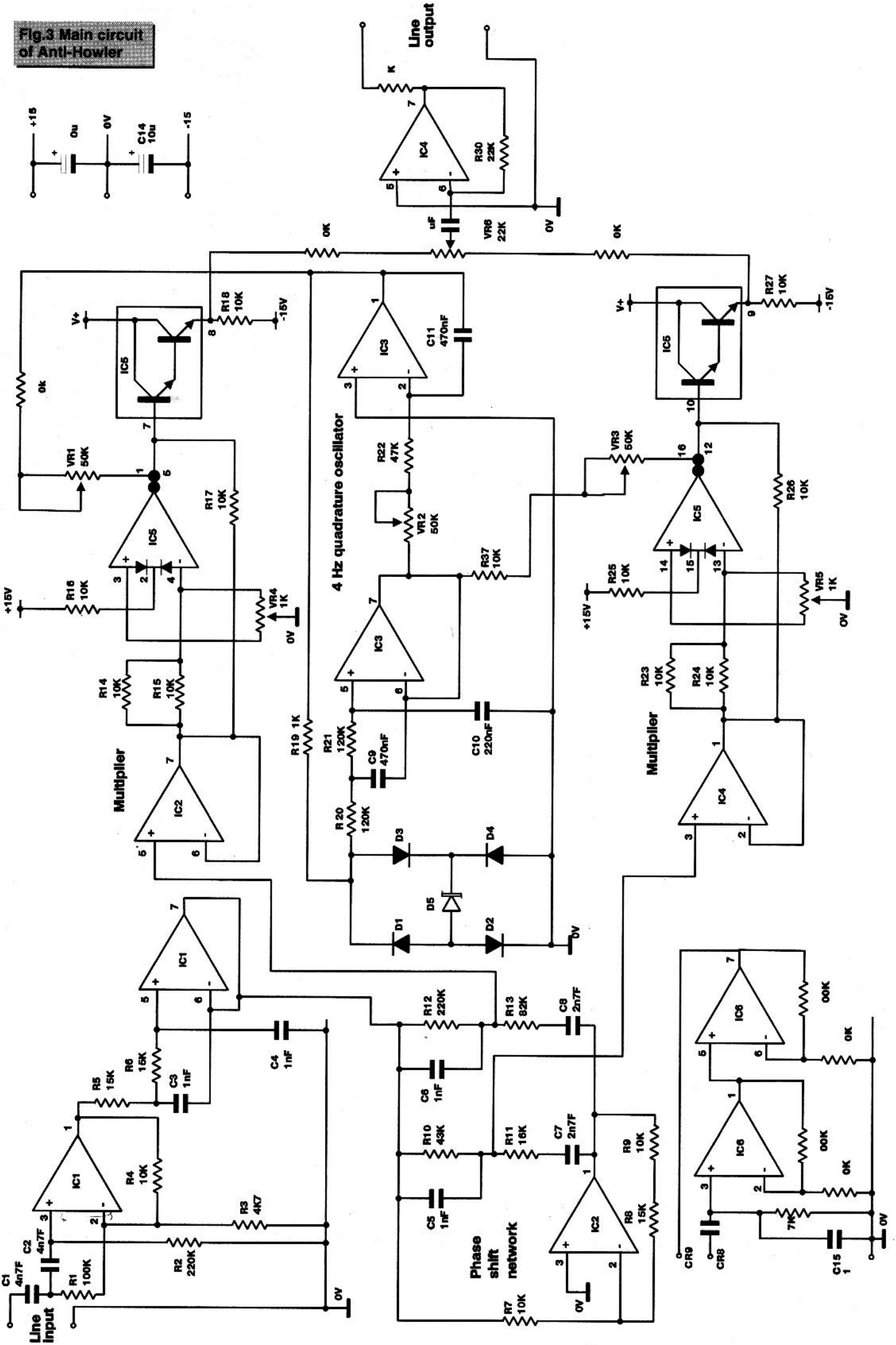
Fig.3 Main circuit of Anti-Howler
+15
0u
0V
C14 10u
-15
Line output
K
IC4
R30 22K
uF
VR6 22K
0V
0K
0K
V+
R18 10K
-15V
IC5
0k
VR1 50K
R17 10K
IC5
+15V
R16 10K
VR4 1K
0V
R14 10K
R15 10K
Multiplier
IC2
IC3
C11 470nF
4 Hz quadrature oscillator
R22 47K
VR2 50K
R37 10K
R19 1K
R21 120K
C9 470nF
C10 220nF
R20 120K
D3
D4
D5
D1
D2
0V
V+
R27 10K
-15V
IC5
VR3 50K
R26 10K
IC5
R25 10K
+15V
VR5 1K
0V
R23 10K
R24 10K
Multiplier
IC4
IC1
R12 220K
R13 82K
C8 2n7F
C6 1nF
R10 43K
R11 16K
C7 2n7F
R9 10K
C5 1nF
R8 15K
IC2
Phase shift network
R7 10K
0V
C4 1nF
R5 15K
R6 15K
C3 1nF
IC1
R4 10K
R3 4K7
C2 4n7F
R2 220K
C1 4n7F
R1 100K
Line input
0V
IC6
00K
0K
IC6
00K
0K
7K
CR9
CR8
C15 1
0V

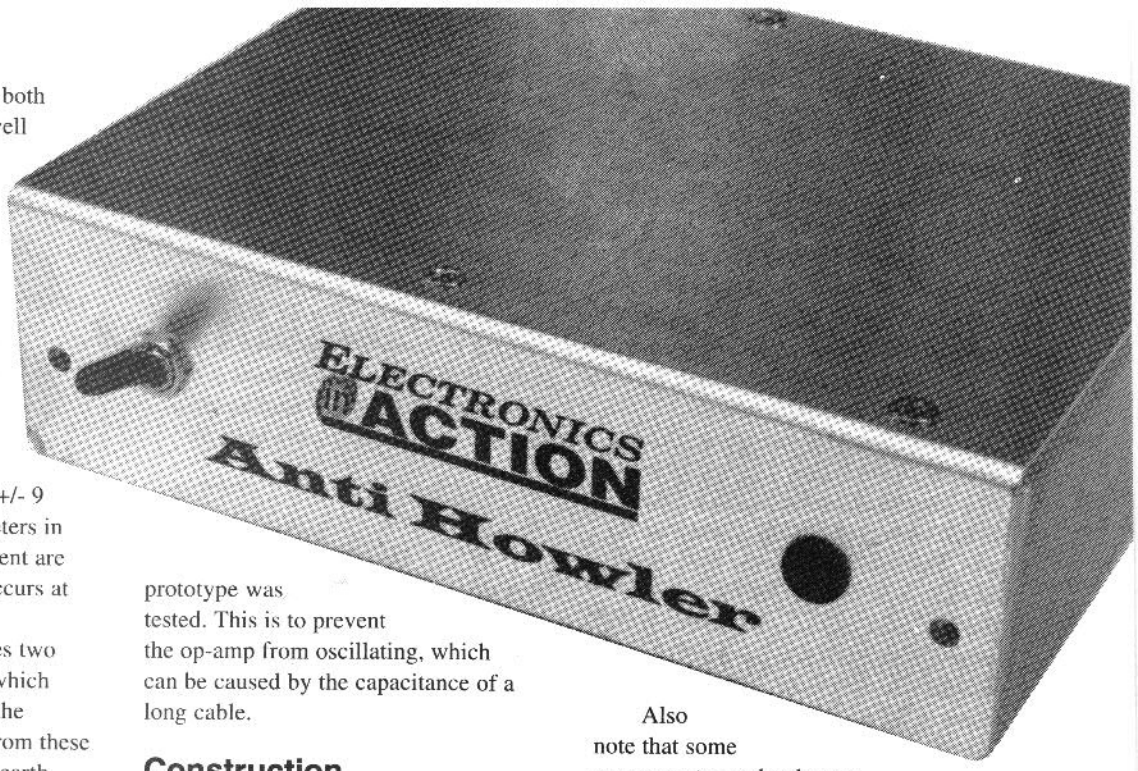


for a modulator, though, is for both inputs to operate negative as well as positive to achieve this an extra portion of the input signal is fed around the trans-conductance amplifier, and added to the output current. The non-inverted signal is added to the inverted current output so that there is a specific level of current-source bias signal which will completely cancel the output. The circuitry is powered from +/- 9 or 12 volts, and the potentiometers in series with the output bias current are adjusted so that cancellation occurs at zero volts.

The LM13700 incorporates two Darlington emitter-followers, which form useful output buffers for the multiplied signal. The output from these buffers is summed by a virtual earth mixer, which has an adjustable differential gain to compensate for any gain differences in the two halves of the circuit. The input of the virtual earth mixer is AC coupled because there is inevitably an offset on the output of the emitter followers in IC5, and AC coupling at this point prevents any offset reaching the output. The AC coupling, C6 was added after the first prototype was tested, so does not show on the photograph.

The output has a 1k resistor in series with it, also added since the first prototype was tested. This is to prevent the op-amp from oscillating, which can be caused by the capacitance of a long cable.

## Construction

This is a relatively complicated circuit in which some aspects of the layout are critical. It is therefore best to use the printed circuit board designed for this project, though experienced constructors should be able to make a Veroboard model work. The assembly itself is straightforward, and should present no problems, but it is important to use close-tolerance components where specified. In particular, if the components in the phase-shifter are seriously inaccurate, then audio distortion will be noticed.

Also note that some components need to be top soldered, and that there are several pin throughs. The prototype used some IC sockets, which are almost impossible to top solder. To do this I used a Multicore through-hole plating kit, but if you do not have one of these available then a single strand of wire running through the hole and soldered to top and bottom pads will connect to the top track without top soldering the component.

The microphone preamplifer, comprising IC6 and surrounding components, need not be fitted if the unit is only going to be used on line

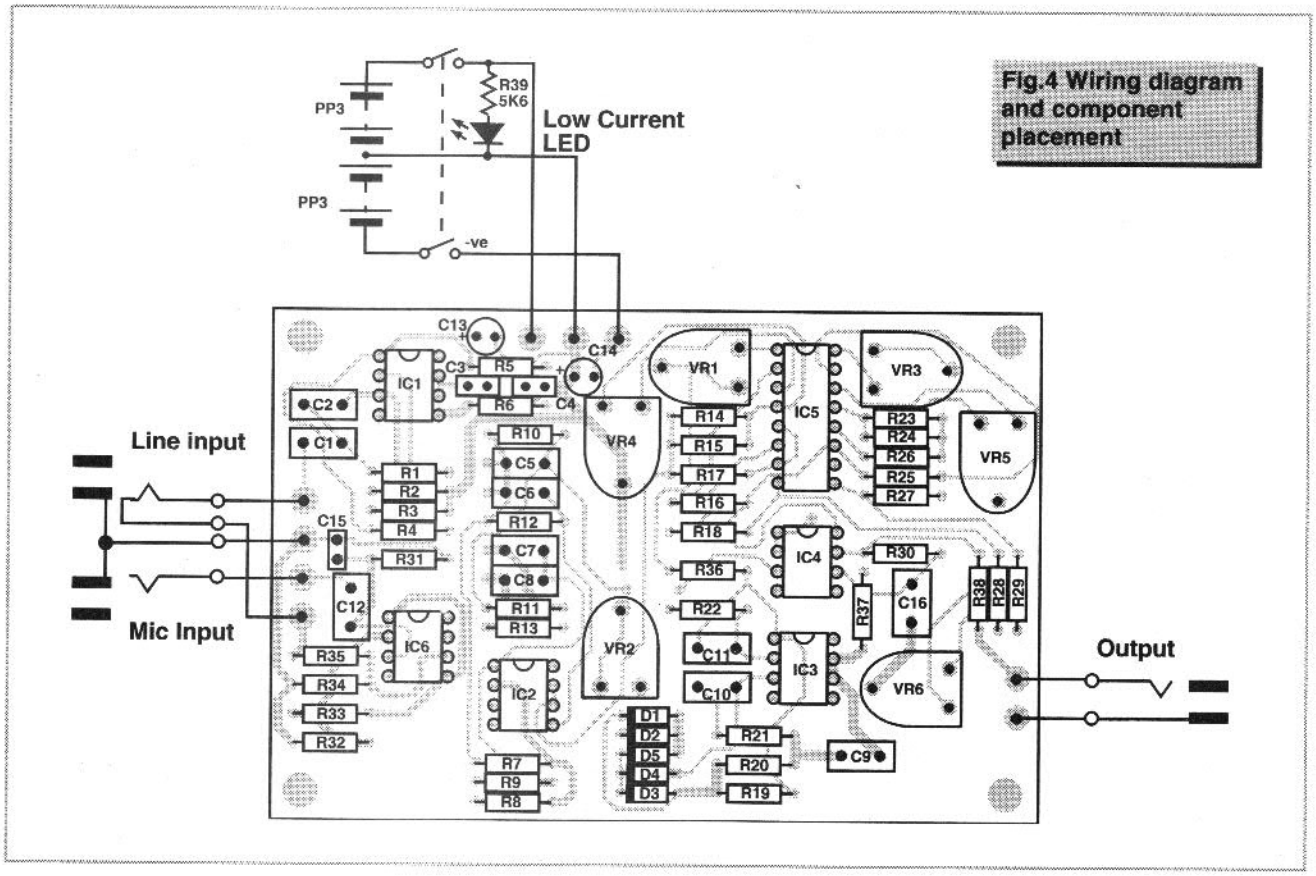


**Fig.4 Wiring diagram and component placement**

level signals.

A choice of power sources is available. The prototype has been tested using a lab 12-0-12 power supply, and is intended to be powered from a switching power supply (planned for the next issue) when complete. As an alternative, either a mains power supply or a pair of PP3 batteries may be used.

As shown in the photograph, the prototype has been built into an aluminium case (38mm high by 133mm wide by 105mm deep) with the PCB and all connectors, the switch and the power on LED mounted into the top half of the case. Three jack sockets are used, one for each input and one for the output. The line input jack is wired so that if nothing is plugged into the line input, then the microphone preamp output is routed to the input of the bandpass filter. Plugging in a line signal disconnects the output of the microphone preamplifier. This is illustrated in the wiring diagram, Fig. 4.

## Testing

The best way to test the unit is by powering it from a +/-12V lab power supply, feeding a signal into the input from a sinewave generator somewhere in the range 500Hz to 5kHz, and checking the various signals using an oscilloscope.

Connect the power supply and signal generator to the PCB and switch on. If you have a dual-beam oscilloscope, then connect one channel to the junction of R11 and R10, and the other to the junction of R12 and R13. You should see two sine waves in phase quadrature. If you only have a single-beam oscilloscope then use the external trigger connection to check the relative phase of the two waveforms. If anything is wrong at this point, check the outputs of the op amps in the chain leading up to the phase shifters. The amplitude on IC1 pin 1 and IC1 pin 7 should be the same, and should be approximately three times the input amplitude. The amplitude on IC2 pin 1 should be 2.5 that on the preceding two op-amps.

***The most difficult part of the procedure is setting up the multipliers***

The next item to check is the 4Hz quadrature oscillator. Connect the oscilloscope to IC3 pin 1, and turn RV2 fully clockv ise. A high amplitude waveform should appear, and at this setting it is likely to be clipped by the power supply rails. Gradually reduce the setting of RV2 until the amplitude of the waveform starts to decrease. After a short period of experimentation you should be able to find a setting below which the waveform gradually dies away to nothing, and above which it gradually rises towards a stable amplitude. Set the pot just clockwise enough to guarantee oscillation. To check that the circuit really can oscillate, temporarily short the cathode of D1 to 0V, which should stop the oscillation. Then remove the short-circuit, and watch the 4Hz oscillation gradually build up over 30 seconds or more. This circuit has a high Q, so it takes a number of cycles of oscillation

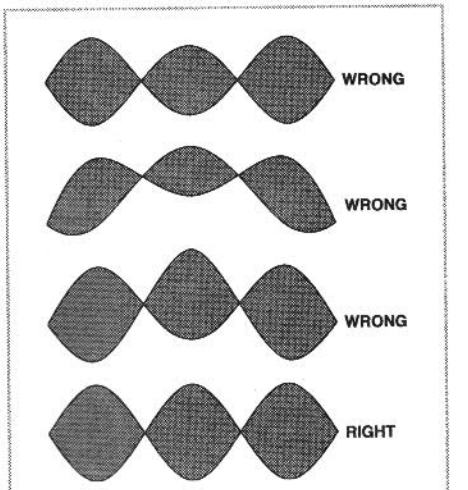


**Fig.5 Correct and incorrect waveforms**

**Fig. 6 Foil patterns: Topside on left Bottomside on right**

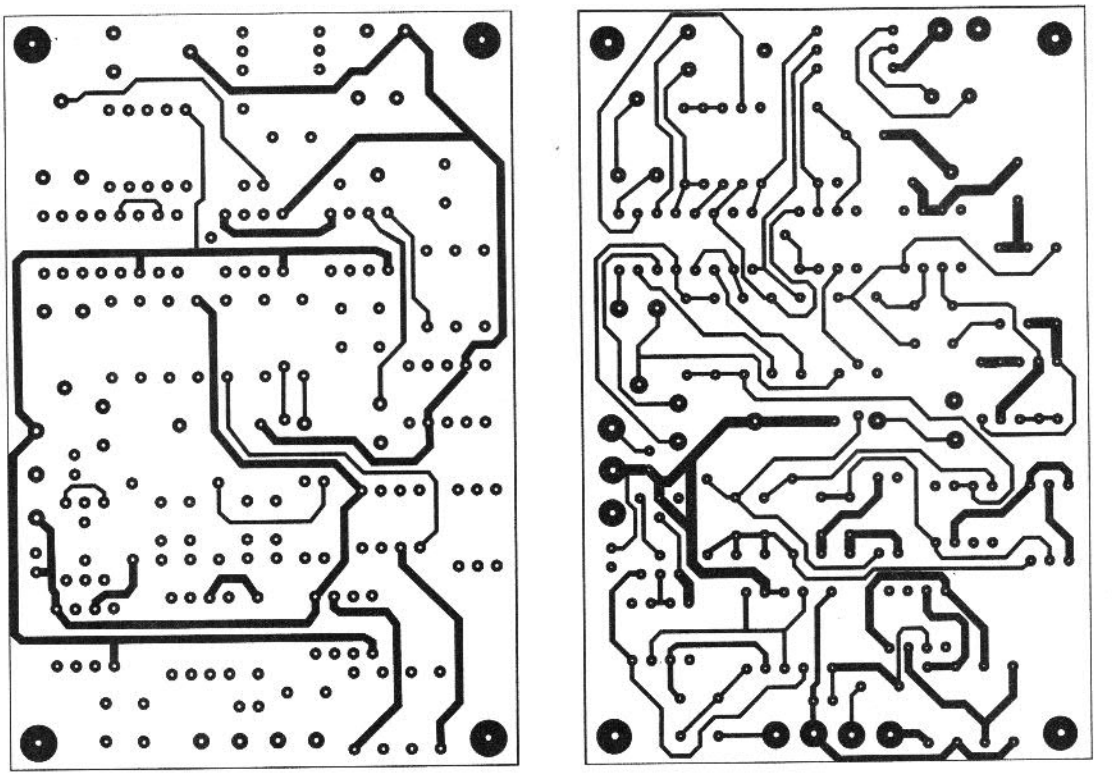

# Anti Howler

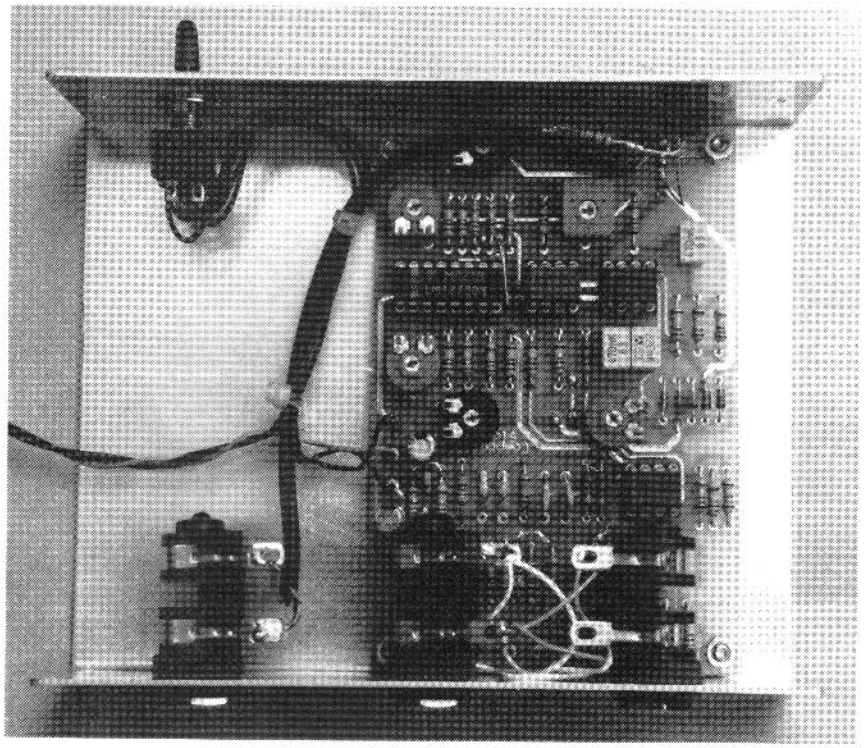

Fig. 7 Front panel template

for the amplitude to stabilise.

The most difficult part of the procedure is setting up the multipliers. For an initial setup, temporarily stop the 4Hz oscillator again, and then adjust VR4 to obtain a minimum offset on IC5 pin 5, and adjust VR5 for minimum offset on IC5 pin 12. Then allow the 4Hz oscillator to start again. With the oscilloscope on IC5 pin 8, adjust RV1, and if necessary slightly readjust VR4 to give the correct waveform as shown in Figure 5. Then connect the oscilloscope to IC5 pin 9 and carry out the same procedure with VR3 and VR5. Note that there may be a DC offset at this point, but this is not important, unless it is a significant fraction of the power supply voltage. Finally, connect the oscilloscope of the output pin, and adjust VR6 to give minimum amplitude modulation of the output signal.

The final test is to feed a sinewave signal in the range 50 to 100mV to the microphone input, and check that the microphone preamplifier is working.

The unit is now working. In order to test its efficacy, try out the effects of feedback using a microphone, an amplifier and a speaker without the frequency shifter in circuit, then connect it in circuit and try again. You are well advised to use ear defenders or cotton wool to protect yourself from possible hearing damage during the first test.

What you should find is that a sharp whistle during the first test, whereas the onset of feedback during the second test is characterised by sort of weebling noises, which do not become serious until the gain has been increased significantly beyond the level at which the whistle would have appeared without the frequency shifter.

If, in use, you find that a 4Hz frequency shift is insufficient, then increase the oscillator frequency by changing C9 and C11 to 220n, and C10 to 100n. This should give enough frequency shift for any reasonable application, and more than this risks becoming painfully audible.

**NEXT MONTH**: We feature a novel power supply to be used with this and a range of other projects.

## Parts

**Resistors**
(0.25W metal film 1%)

| | |
|---|---|
| R1,33,35 | 100K |
| R2,12 | 220K |
| R3 | 4K7 |
| R4,7,9,14,15,16 | 10k |
| R17,18,23,24,25 | 10k |
| R26,27,28,29,32 | 10k |
| R34,36,37 | 10K |
| R5,6,8 | 15K |
| R10 | 43K |
| R11 | 16K |
| R13 | 82K |
| R19,38 | 1K |
| R20,21 | 120K |
| R22,31 | 47K |
| R30 | 22K |
| R39 | 5K6 |

**Potentiometers**

| | |
|---|---|
| VR1,2,3 | 50K |
| VR4,5 | 1K |
| VR6 | 22K |

**Capacitors**

| | |
|---|---|
| C1,C2 | 4n7 |
| C3 | 1n8 |
| C4 | 1n |
| C5,C6 | 1n 1% |
| C7,C8 | 2n7 1% |
| C9,C1 | 470n |
| C10,C12 | 220n |
| C13 | 10lF electro |
| C14 | 10lF electro |
| C15 | 100p |
| C16 | 1i poly or ceram |

**Semiconductors**

| | |
|---|---|
| D1,2,3,4 | 1N4148 |
| D5 | BZX79C5V1 zener |
| IC1,2,3,4 | LF353 |
| IC5 | LM13700 |
| IC6 | NE5532 |

**Additional Items**
Three jack sockets
low current LED
DPDT switch

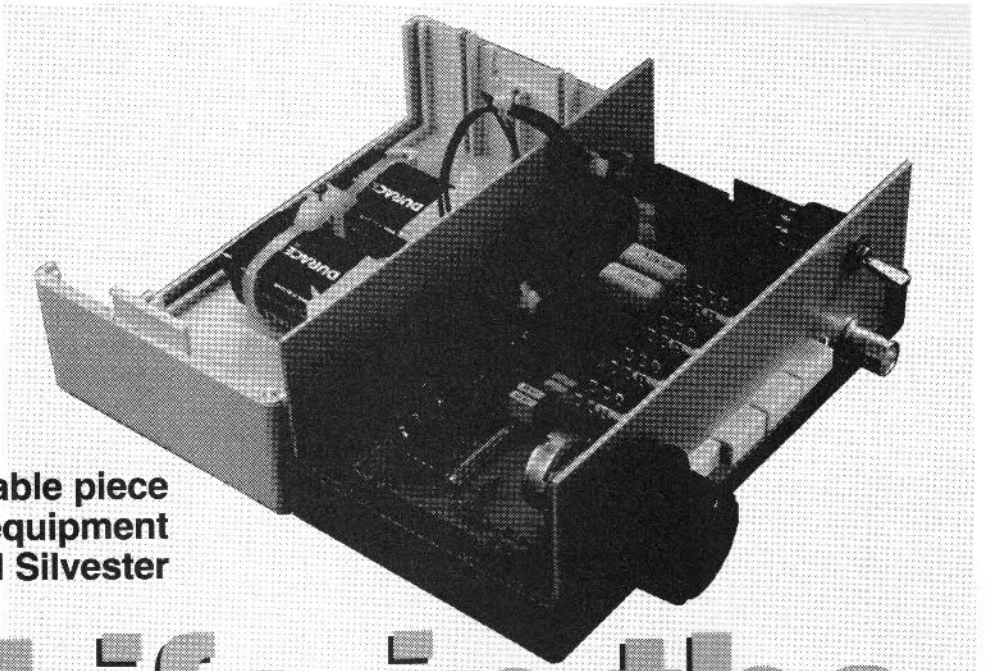

**An invaluable piece of test equipment by David Silvester**

# Life in the S-Gen Waves

Whilst there have been a number of published projects to build a signal source giving a sine wave output, many of these are based on either the ICL8038 or XR2206 generator chips. Internal circuits in these charge and discharge a capacitor at constant current producing a triangular waveform. The sine wave output is generated from the triangular wave, the tops of the triangle being distorted by a multiple diode array. The oscilloscope version of the sine wave, can be seen to have a slightly odd shape and is certainly not suitable for distortion testing although satisfactory for other purposes.

The alternative is to have a Wein Bridge oscillator producing pure sine waves from a resistor-capacitor circuit. The basic Wein Bridge circuit is shown in Figure 1. With an input signal at the upper end of the resistor and an output at the junction of the second resistor and two capacitors, the input signal will be attenuated and phase shifted at the output as it is in all RC filters. The Wein Bridge has a particular frequency at which the resistance of the resistors equals the capacitors' impedance (= $1/2\pi fc$), the circuit attenuation reaches a minimum of three and the phase shift equals zero. Such a circuit is ideal for making an oscillator. If in addition we make the resistors variable and have a switched bank of capacitors then we can build a simple audio sine wave oscillator that will cover 10-100KHz.

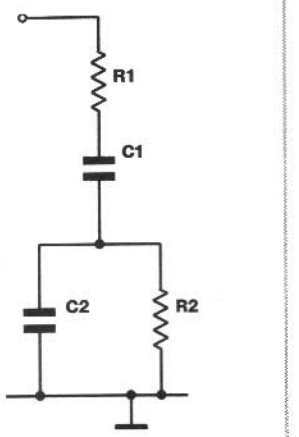


**Fig. 1 Basic Wein Bridge Oscillator**

## Oscillator Circuit

The full oscillator circuit is shown in Figure 2. The Wein bridge is formed from the resistors R1 and R2 in series with the dual potentiometer VR1 wired as a pair of variable resistors and capacitors C1 to C8. This provides a 10:1 ratio that allows the audio output to be split up into a set of frequency bands. Since the Wein bridge has a 3:1 attenuation at the frequency of oscillation then if the op-amp IC1a can be made to give exactly a three times gain then the circuit will oscillate at the chosen frequency giving a clean sine wave. It is possible to hold the gain at exactly three if we use some form of feedback that is sensitive to the output signal level.

## Stabilizing The Output

The Wein bridge oscillators have been around for many years and over that time a variety of devices have formed the voltage sensitive element in the negative feedback loop. The author has tried a number of different methods of stabilising the gain with varying degrees of success. A small lightbulb filament will change resistance as it warms up and is an option here but the power demanded requires a special op-amp. LED and Light Dependent Resistors, normal and opto-coupled FETs were tried. Again, although they all worked over a small frequency range, the easiest and most cost effective method for the AF spectrum was to use a thermistor for the output sensitive element. Let us consider the feedback loop of R3 and the thermistor Th1 alone. As the output voltage rises, the current through the feedback loop increases and the thermistor resistance falls. This fall in resistance increases the amount of negative feedback and

stabilises the circuit gain to exactly three. A small problem arises in that a thermistor takes a second or so to change it's value significantly so that when changing frequency, the oscillator takes a short time to settle down to a stable output. However without this delay time the thermistor could not be used for low frequency outputs as variations in the thermistor resistance would cause distortion to the sine waves.

To complete the circuit and hopefully make it more usable to constructors it was decided to add a buffer stage for the sine wave output and a TTL compatible output as these add little to the cost. The buffer is the second half of the TL072 op-amp chosen. The oscillator output stage passes directly to the other half of the op-amp as a buffer. The 1K resistor on the output is to protect the op-amp in case it is short circuited. The unit was designed to be low cost and therefore no attempt was made to put any form of level control into the oscillator itself as it was felt that it would be more useful to have this external to the oscillator. The TTL output comes from an LM311 comparator. R7 is the pull-up resistor for the TTL output whilst R5 and R6 provide hysteresis so that at the point of switching, the TTL output switches cleanly and does not oscillate due to noise.

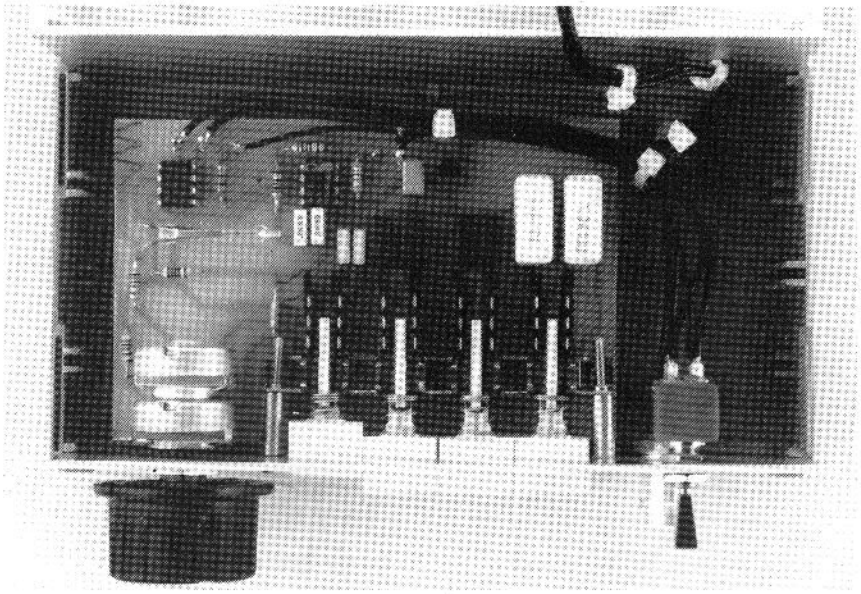

The power for the unit comes from a pair of 9V PP3 batteries. As an option, the constructor can use a simple transformer, bridge rectifier, capacitor and 7815/7915 regulator set-up built into the box to provide +15 and -15V. The box listed in the parts list is only big enough for the battery option.

Constructors who choose mains power must find an alternative for themselves to fit the size of the

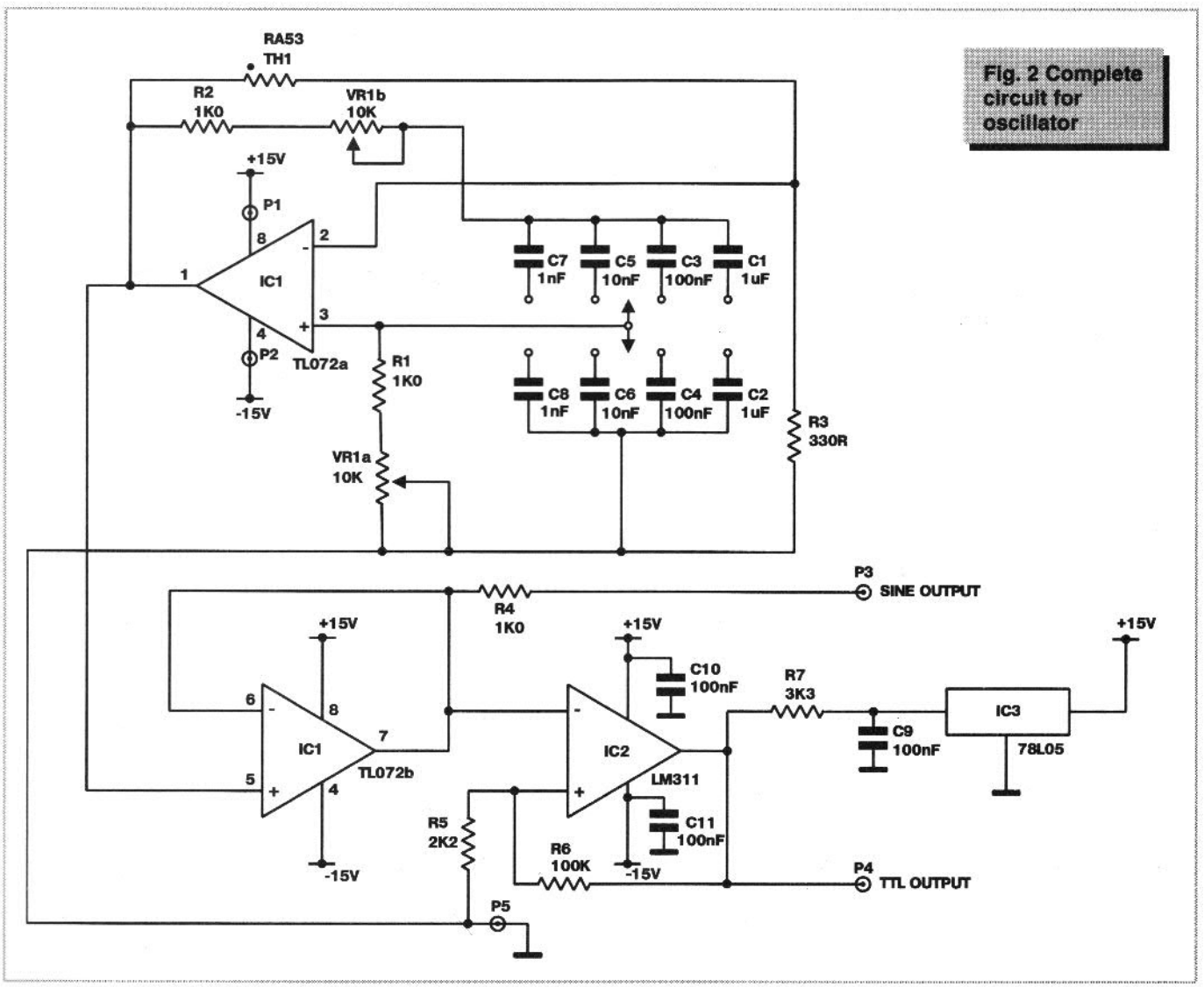


**Fig. 2 Complete circuit for oscillator**

additional components. In both cases a 78L05 mounted directly on the PCB supplies 5V for the TTL output voltage. This is a very common circuit and will not be described here although recommended construction details follow. Component details in the parts list are for the battery powered version.

## Construction

The main PCB has the controls directly attached to it so this must fit into the case at the front. The construction of the main board is very simple if you follow Figure 3 carefully. In the prototype I chose not to use sockets for the two ICs as these are low cost items. This decision is left to the constructor as there is plenty of room for sockets. If damaged, the simplest way to remove the chip is to cut the legs and then unsolder the pins.

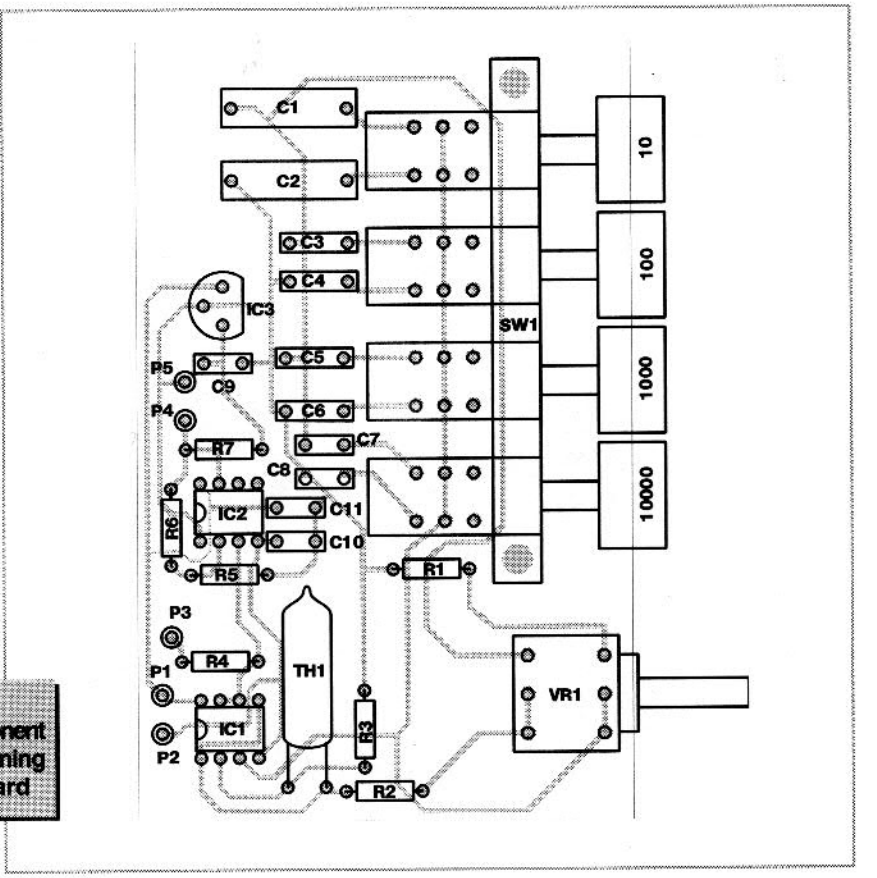


Fig. 3 Component positioning on board

It may be easier to fit in and solder the main switch SW1 first. The switch comes as a kit of parts, there are four switch units, four buttons and a metal latching assembly. If you take one of the switches and push the sprung end in you will see that a small metal spring moves so that this gives a push on/push off action. This is unsuitable for our use as we want the four switches to work as a team. Pushing one lets out all of the others. To do this the small spring needs to be removed from each switch unit so that they push in but come back out when released.

In place of the spring is a small plastic piece that stops the push mechanism falling completely out in use. This needs to be installed into the holes provided on the switch. Having converted all four take the latchbar mechanism that interconnects all of the switches into the bank. There is a flat spring blade that fits into one of the switches on the right of the mechanism just behind the main coil spring that holds out the button. It pushes between the top board piece and the plastic base. Next take the latchbar slider and fit the modified switch to the right hand end. If you push the switch gently you should see the interlock move and the switch latch in the inward position. If it works then fit this to the right hand side of the remaining U shaped metal bar. The switch should now push in and lock. Moving the interlock bar to the right will release the switch again. If you look carefully you should see the small spring on the right hand side move. Bend over the tabs to hold this switch in position. Now add a second switch and bend over the tabs. As one switch is pushed the other should snap out.

If so, you are almost finished. Put in the two last switches and bend the tabs to secure them. Pushing any switch should cause the others to snap out immediately. This is probably the most difficult part of the construction, until the switch works properly do not proceed further.

Fig. 4 Front panel arrangement

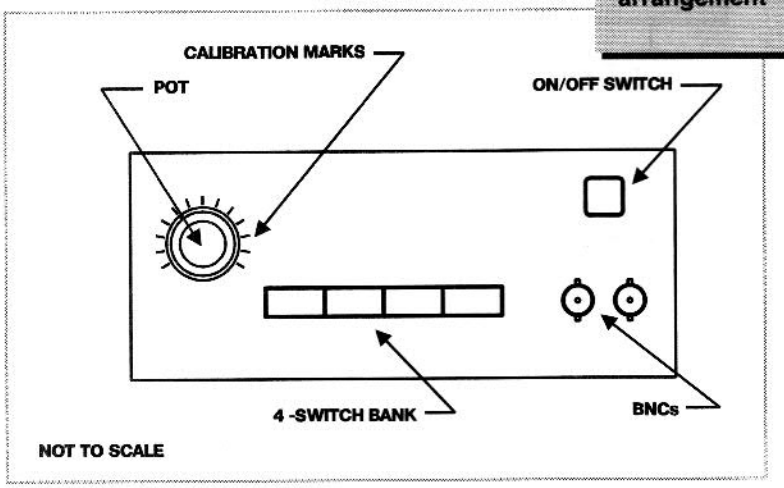


With the switch mechanism operational, push it into the PCB and solder down ensuring that the interlock mechanism is flush down on the PCB and the whole unit is parallel with the board. Next add the dual pot VR1. Solder the rest of the components into their positions cutting off the excess wires as necessary. In the prototype I used terminal pins for the off-board connections P1 to P5. Solder these in aswell.

For a quick test connect two PP3 battery connectors to pins P1, P2 and P5. The red wire of one goes to P1 and the black wire of the other to P2. The two remaining wires, (the centre tap of the battery) go to pin P5. This powers the unit. Fit the batteries and check the voltages at P1 and P2 relative to P5 (ground). You should get + and - 9V.

An oscilloscope should provide a clean sine wave output at the thermistor terminals. The frequency will vary by moving VR1 and SW1 will change the range. The same signal should be at P3. If all is satisfactory check for the square wave at the output P4.

Position the PCB at the front of the case with the pot spindle central in the vertical and about 1" to the left of the

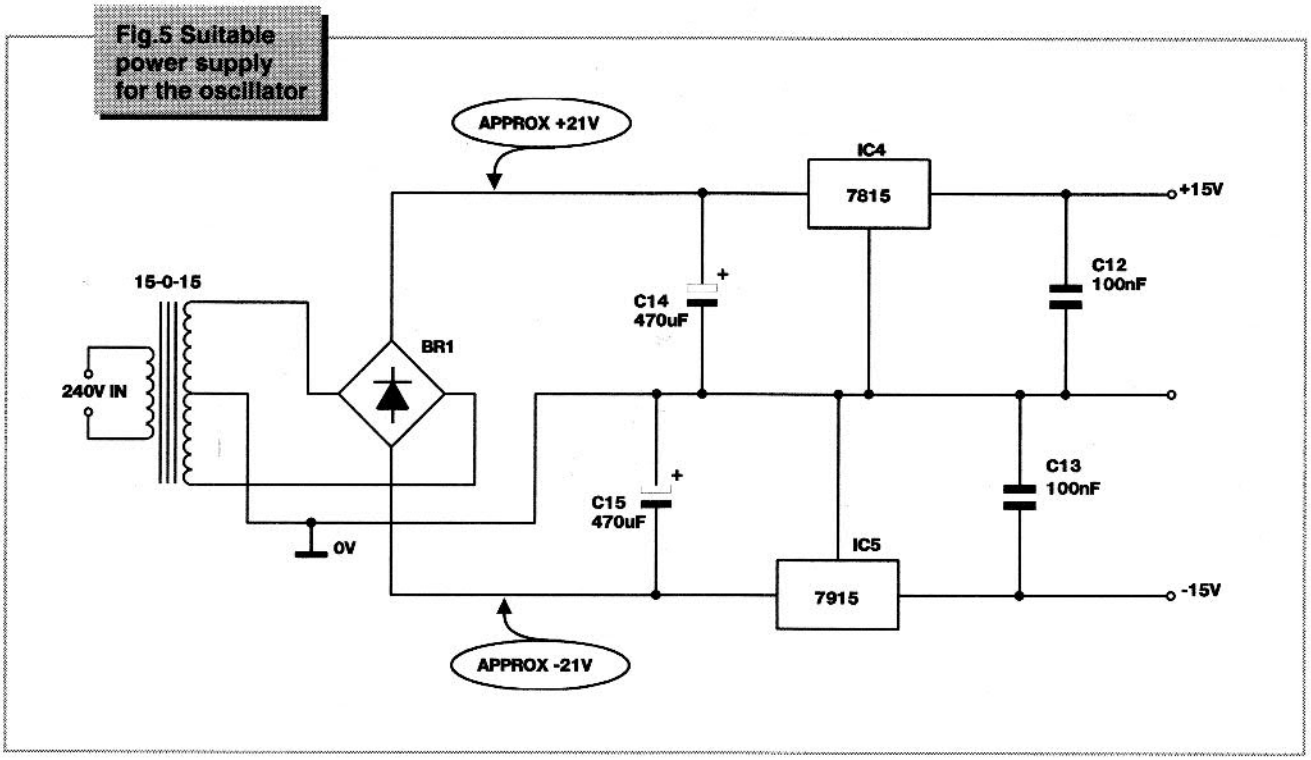


Fig.5 Suitable power supply for the oscillator

***The construction of the main board is very simple if you follow Figure 3***

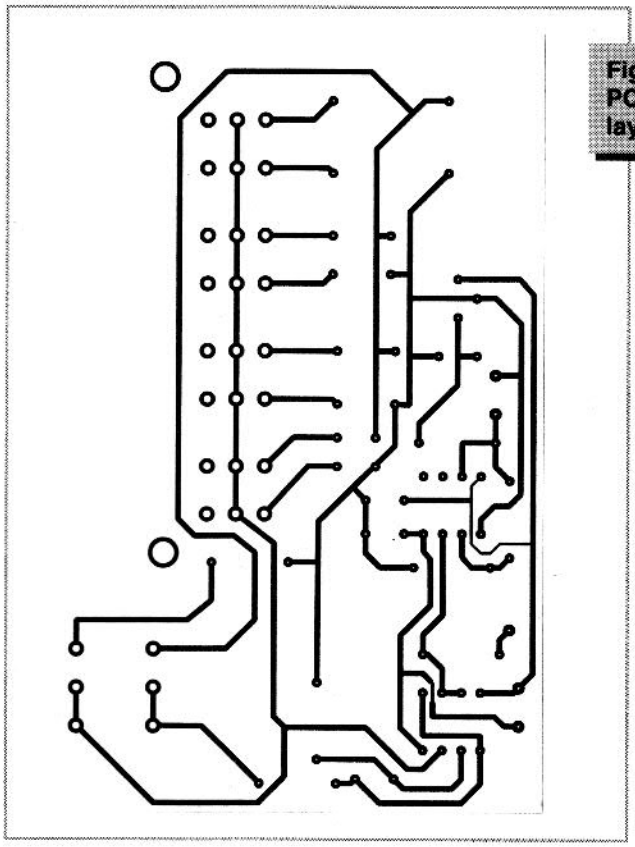

Fig.6 Oscillator PCB track layout

front panel edge (see Figure 4). Drill a hole for the pot's threaded portion. Now mark the positions of the switch bank knobs on the front panel, remove the PCB and cut out this rectangular hole. You can try either a nibbler or an abrafile, to make the edges smooth. Next drill two screw holes for the switch. Now drill the holes for an on-off switch and for the output sockets. Attach the PCB to the front panel by the pot's fittings and the screws to the switch bank. The 1/2" spacers fit between the panel and the front of the interconnect mechanism.

## Power Supply

If mains power is to be used for the oscillator, place the transformer, and capacitors of the PSU behind the PCB. Drill holes in the box to hold these items and a holes in the back panel to take the mains power lead and the fuse holder. The power lead needs to be fitted with a clamping grommet to stop the wire pulling out. Install the mains lead with the brown wire going to the end of the fuseholder furthest from the panel. The blue wire goes directly to the transformer input and another wire needs to be added to connect the other side of the fuseholder to the transformer. Fit a mains plug to the cable with a 3A fuse and fit a 100mA fuse into the fuseholder. Wire up the transformer, bridge rectifier, capacitor connections as shown in Figure 5. Plug in and check that from the green wire you can find around +21V on C14 and -21v on C15. If all is OK unplug and discharge the capacitors with a spare 1K resistor. DO NOT SHORT out the capacitors with a wire link as the capacitors can be damaged by the high currents that flow.

Now fit the regulator IC's. TO220 versions of 7815 and 7915 are best as these can be secured to the back panel using standard transistor mounting kits. Do not forget the insulators as the metal part of the 7915 regulator is not at ground potential. Re-test and you should find about +15V at the output of the 7815, the red wire, and -15V from the 7915, the black wire. These values are approximate as they depend on the tolerances in the regulator chips, but more than 5% error and you have a problem to sort out.

Finally wire the PCB pins to the mains power supply described above. In the battery case the PP3 sockets are already connected. These have to be removed from P1 and P2 so that a double pole on-off switch can be fitted into the lines otherwise the unit will always be powered. The batteries themselves were held onto the lid of the box by ty-wraps and self sticky pads, these being a simple option but relatively reliable.

The last item is the output wiring. For this I would recommend using audio type coax. The outer screen connects to pin P5 for both pieces of coax with one central core going to P3 and the other to P4. For one of the pieces of coax, and I would recommend that it is the coax with the core connected to P3, join the core at the other end to the output connector (BNC in the prototype) and the screen to the solder tag fitted under the nut of the BNC connector. To prevent an earth loop, only the P4 core connection needs to be connected to the centre of the second BNC connector as earthing is provided through the front panel. Finish off by bundling the cables with ty-wraps.

Only a final test is needed to show that the outputs come out of the correct BNC connectors. If a frequency counter is available then calibration marks can be put around the outside of the pot knob, and the buttons can be marked with the frequency bands they produce.

You will now be the owner of a very useful piece of test equipment for both analogue and logic circuits.

## Parts

**Semiconductors**
IC1 TL072C
IC2 LM311C
IC3 78L05C

**Resistors** (0.25W)
R1,2,4 1K0
R3 330R
R5 2K2
R6 47K
R7 3K3

**Capacitors**
(Figures in bracket are lead spacing in inches)
C1,2 1000nF polyester (0.6)
C3,4 100nF polyester (0.3)
C5,6 10nF polyester (0.3)
C7,8 1nF polyester (0.2)
C9,10,11 100nF ceramic or polyester (0.2)
VR1 10k linear dual gang potentiometer

**Additional items**
PCB
4 x Latchswitch 2 pole (Maplin FH75S)
4 x Latchbuttons (Maplin FH61 to FH64 depending in colour chosen)
1 x Latchbar 4 way (Interlock mechanism Maplin FH78K)
2 x screws 8BA 1" long for switch
2 x spacers 8BA clearance ½" long
RA53 thermistor Th1
Box as required. Prototype used Verobox 212 (Maplin LL09K)
Pot Knob
Rubber feet
2 pole minature on-off switch
BNC connectors
2 x Battery clips for PP3 if not mains powered
Ty-wraps plus stick on pads for ty-wraps
Solder pins plus wire as required.




# JURASSIC?

NO! *Armstrong Consultants adapts to the changing conditions of today's technological climate.*

Design for industry - switched mode converters - specialist analogue circuitry - environmental control - audio, video, RF - micropower circuitry.

Are you tired of designs and documentation that barely meet you requirements?

We can provide troubleshooting for developmental projects, or for established products with production problems.

CAD of PCB layouts and artwork, including surface-mount and multilayer.

Schematic capture is used to drive mixed-mode circuit simulation and netlist generation.

Complete service from specification through to documentation.

Armstrong Consultants, 423 Bideford Green, Leighton Buzzard, Beds LU7 7TY.
Tel: 0525 376339 Fax: 0525 377916



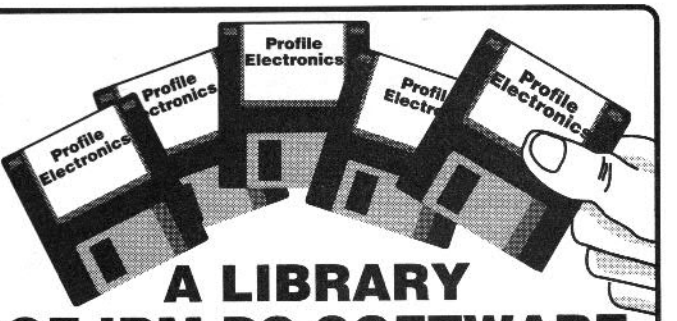


# A LIBRARY OF IBM-PC SOFTWARE at your fingertips

**SHAREWARE** is the **TRY-BEFORE-YOU-BUY APPROACH TO SOFTWARE:**
You pay a nominal charge for program distribution to cover disks, copying, carriage, etc.

ONLY IF YOU FIND A PACKAGE USEFUL
ARE YOU THEN REQUIRED TO PAY A REGISTRATION FEE
(to the software author), which allows you to continue using it.

THIS CAN WORK OUT CONSIDERABLY LESS EXPENSIVE THAN BUYING SIMILAR SOFTWARE IN THE CONVENTIONAL WAY.

**Computer aided design**
**- Now simple & AFFORDABLE !**

**ENGINEERING - GRAPHICS - BUSINESS - PC-TUTORIALS**
**- CALCULATIONS - SCIENCE - EDUCATION**

Re-inventing the wheel? Don't do it!! Quicky select software tailored to your needs from the many 1000's of packages available in the Public Domain, and as Shareware. We distribute IBM-PC compatible programs exclusively on carefully grouped sets of high quality disks
**- which saves you time, and money.**

**Call us now to find out how!**
**CAD/CAM - PCB DESIGN - CIRCUIT EMULATION & TEST**
**- PC-ENGINEERING - RADIO - COMM'S**

**Profile Electronics (EIA)**
**"Getting the job done"**
**100-102 Woodhouse Road, Leytonstone, London, E11 3NA.**
**Tel: 081-470 2038 Mail order only (24 hours)**

**MICROWAVE CONTROL PANEL.** Mains operated, with touch switches. Complete with 4 digit display, digital clock, and 2 relay outputs one for power and one for pulsed power (programmable). Ideal for all sorts of precision timer applications etc. **Now only £4.00 ref 4P151.** Good experimenters board.

**FIBRE OPTIC CABLE.** Stranded optical fibres sheathed in black PVC. Five metre length £7.00 ref 7P29R or £2 a metre.

**12V SOLAR CELL.** 200mA output ideal for trickle charging etc. 300 mm square. Our price £15.00 ref 15P42R. Gives up to 15v.

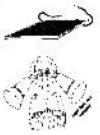

**PASSIVE INFRA-RED MOTION SENSOR.** Complete with daylight sensor, adjustable lights on timer (8 secs -15 mins), 50' range with a 90 deg coverage. Manual overide facility. Complete with wall brackets, bulb holders etc. Brand new and guaranteed. **Now only £19.00 ref 19P29**
Pack of two PAR38 bulbs for above unit £12.00 ref 12P43R

**VIDEO SENDER UNIT.** Transmit both audio and video signals from either a video camera, video recorder or computer to any standard TV set within a 100' range! (tune TV to a spare channel). 12v DC op. £15.00 ref 15P39R Suitable mains adaptor £5.00 ref 5P191R. Turn your camcorder into a cordless camera!

**FM TRANSMITTER** Housed in a standard working 13A adapter (bug is mains driven). £26.00 ref 26P2R. Good range.

**MINATURE RADIO TRANSCEIVERS.** A pair of walkie talkies with a range of up to 2 kilometres. Units measure 22x52x155mm. Complete with cases and earpieces. £30.00 ref 30P12R

**FM CORDLESS MICROPHONE.** Small hand held unit with a 500' range! 2 transmit power levels. Reqs PP3 battery. Tuneable to any FM receiver. Our price £15 ref 15P42AR.

**12 BAND COMMUNICATIONS RECEIVER.** 9 shortbands, FM, AM and LW DX/local switch, tuning 'eye' mains or battery. Complete with shoulder strap and mains lead. £19 ref 19P14R. Ideal for listening all over the world.

**CAR STEREO AND FM RADIO.** Low cost stereo system giving 5 watts per channel. Signal to noise ratio better than 45db, wow and flutter less than .35%. Neg earth. **£19.00ref 19P30**

**LOW COST WALKIE TALKIES.** Pair of battery operated units with a range of about 200'. Our price £8.00 a pair ref 8P50R. Ideal for garden use or as an educational toy.

**7 CHANNEL GRAPHIC EQUALIZER** plus a 60 watt power amp! 20-21KHZ 4-8R 12-14v DC negative earth. Cased. £25 ref 25P14R.

**NICAD BATTERIES.** Brand new top quality. 4 x AA's £4.00 ref 4P44R. 2 x C's £4.00 ref 4P73R, 4 x D's £9.00 ref 9P12R, 1 x PP3 £6.00 ref 6P35R Pack of 10 AAA,s £4.00 ref 4P92R.

**TOWERS INTERNATIONAL TRANSISTOR SELECTOR GUIDE.** The ultimate equivalents book. New ed. £20.00 ref 20P32R.

**GEIGER COUNTER KIT.** Complete with tube, PCB and all components to build a battery operated geiger counter. £39.00 ref 39P1R

**FM BUG KIT.** New design with PCB embedded coil. Transmits to any FM radio. 9v battery req'd. £5.00 ref 5P158R. 35mm square.

**FM BUG** Built and tested superior 9v operation £14.00 ref 14P3R

**COMPOSITE VIDEO KITS.** These convert composite video into separate H sync, V sync and video. 12v DC. £8.00 ref 8P39R.

**SINCLAIR C5 MOTORS.** 12v 29A (full load) 3300 rpm 6"x4" 1/4" O/P shaft. New. £22.00 ref 20P22R. Limited stocks.

**ELECTRONIC SPEED CONTROL KIT** .for C5 motor, PCB and all components to build a speed controller (0-95% of speed). Uses pulse width modulation. £17.00 ref 17P3R. Potentiometer control.

**SOLAR POWERED NICAD CHARGER.** Charges 4 AA nicads in 8 hours. Brand new and cased £6.00 ref 6P3R. 2xC cell model £6.00.

**ACORN DATA RECORDER ALF503.** Made for BBC computer but suitable for others. Includes mains adapter, leads and book. £15.00 ref 15P43R

**VIDEO TAPES.** Three hour superior quality tapes made under licence from the famous JVC company. Pack of 10 tapes **New low price £15.00 ref J15P4**

**PHILIPS LASER. 2MW HELIUM NEON LASER TUBE. BRAND NEW FULL SPEC £40.00 REF 40P10R. MAINS POWER SUPPLY KIT £22.00 REF 22P33R READY BUILT AND TESTED LASER IN ONE CASE £75.00 REF 75P4R.**

**12 TO 220V INVERTER KIT.** As supplied it will handle up to about 15w at 220v but with a larger transformer it will handle 80 watts. Basic kit £12.00 ref 12P17R. Larger transformer £12.00 ref 12P41R.

**WIND UP SOLAR POWERED RADIO!** FM/AM Radio takes rechargeable batteries. Complete with hand charger and solar panel. £14.00 REF 14P200RA.

**BARGAIN NICADS AAA SIZE 200MAH 1.2V PACK OF 10 £4.00 REF 4P92R, PACK OF 100 £30.00 REF 30P16R.**

**FRESNEL MAGNIFYING LENS.** 83 x 52mm £1.00 ref BD827R.

**12V 19A TRANSFORMER** Ex equipment £20 but OK.

**POWER SUPPLIES** Made for the Spectrum plus 2 give +5 @ 2A, +12 @700mA & -12 @ 50mA. £8 ref Q8P3

**UNIVERSAL BATTERY CHARGER.** Takes AA's, C's, D's and PP3 nicads. Holds up to 5 batteries at once. New and cased, mains operated. £6.00 ref 6P36R.

**IN CAR POWER SUPPLY.** Plugs into cigar socket and gives 3,4,5,6,7.5,9, and 12v outputs at 800mA. Complete with universal spider plug. £5.00 ref 5P167R.

**QUICK CUPPA?** 12v immersion heater with lead and cigar lighter plug £3.00 ref 3P92R. Ideal for tea on the move!

**LED PACK .** 50 red, 50 green, 50 yellow all 5mm £8.00 ref 8P52

**360K 5.25" DISK DRIVE.** Industry standard, ideal replacement or second drive for most computers. £9.00 EACH ref: X9P1.

**PPC PSU** 13.8V 1.9A (not plug in). £10.00 EACH. REF: X10P1.

MINIMUM GOODS ORDER £5.00. TRADE ORDERS FROM GOVERNMENT, SCHOOLS, UNIVERSITIES, & LOCAL AUTHORITIES WELCOME. ALL GOODS SUPPLIED SUBJECT TO OUR CONDITIONS OF SALE AND UNLESS OTHERWISE STATED GUARANTEED FOR 30 DAYS. RIGHTS RESERVED TO CHANGE PRICES & SPECIFICATIONS WITHOUT PRIOR NOTICE. ORDERS SUBJECT TO STOCK. QUOTATIONS WILLINGLY GIVEN FOR QUANTITIES HIGHER THAN THOSE STATED.

## THIS MONTHS SPECIAL OFFERS

# SOLAR CELLS

## 10 WATT SOLAR CELL (3" x 1") 14.5v/700mA

Now available by mail order Coated with exceptionally efficient amorphous silicon these glass solar cells have an almost timeless lifespan and will not suffer with discolouration. There are possibly hundreds of uses for these cells, a few of which could be: for **Car Battery Charging**, for use on **Boats** or on **Caravans**, in fact anywhere a portable **12V** supply is required. Several of our overseas Mediterranean customers with homes in remote hilly sites, use these solar cells as a daytime power source to backup generators. The solar cells can be connected in series or parallel to give higher voltages or larger current capacity. **REF: EA34P1**

**PRICED at only £33.95. PLUS an additional £2.00 special packaging charge on this item in addition to £3.00 PP charge.**

## OTHER SOLAR PANELS:

**12V 200mA GLASS SOLAR PANEL.**
12" x 12" in dimension **£15.00 EACH. ref: 15P42.**

**.45V 700mA SOLAR CELL.**
silicon plastic encapsulated. 95 x 65 x 7.5mm in dims.
**£3.00 EACH. ref: 3P42.**

**.45V 400mA SOLAR CELL.**
silicon plastic encapsulated. 75 x 45 x 7.5mm in dims.
**£2.00 EACH. ref: 2P199.**

**.45V 100mA SOLAR CELL.**
silicon plastic encapsulated. 45 x 26 x 7.5mm in dims.
**£1.00 EACH. ref: BD631.**

**SOME OF OUR PRODUCTS MAY BE UNLICENSABLE IN THE UK**

**INDUCTIVE AMPS £5.00**
Made for amplifying a telephone handset for the hard of hearing. However if you hold one against a piece of wire carrying a telephone conversation you can hear both sides of the conversation! It can also be used for tracing live wires in a wall or detecting cables carring mains etc. Fully cased complete with battery and fixing strap. Aprox 2.5" diameter 1" thick.
**Our Price :£5.00 Our Ref :EA5P11**

**CTM644 COLOUR MONITOR £79.00**
Refurbished monitor suitable for many home computers standard RGB input.
**Our Price :£79.00 Our Ref :EA79P11**

**ARCHEMEDIES A3000 PSU £10.00**
A compact switch mode PSU with on/off switch, selectable voltage input 110/240. NEW O/P via fly leads. GOOD STOCKS AVAILABLE.
**Our Price :£10.00 Our Ref :EA10P11**

**ANSWERPHONES from only £18.00**
Yes its true BT approved push button dialling. These are customer returned units and have two faults. We will supply you with a chip to cure one fault then you have to sort out the other problem! NON RETURNABLE.
Prices:
**£18.00 each. REF: EA18P21**
**£60.00 PKT 4. REF: EA60P21**

**PORTABLE ALARM SYSTEM £17.00**
'PAL' Portable Multi Beam Scanning System. Lockable Stand-alone PIR unit with removable keys (3 supplied). This unit uses a PP3 battery and when activated emits a piercing SHRILL! The unit scans the room and memorises the layout. Should this change, the alarm is triggered. There is a 60 second exit delay.
**Our Price :£17.00 Our Ref :EA17P11**

**PIR MOVEMENT DETECTOR £15.00**
Once again we have aquired stocks of this popular line and are able to offer you a very high quality and professional detector at only **£15**. Range: 20m with a 90° arc. Day and Night Mode Dims: 15cm x 9cm x 11cm. New and boxed, complete with installation guide.
**Our Price :£15.00 Our Ref :EA15P21**

MANY MORE SPECIAL OFFERS IN OUR REGULAR NEWSLETTERS

**WE HAVE HUNDREDS AND HUNDREDS MORE STOCK LINES - TOO MANY TO LIST IN ONE ADVERT ! CHOOSE FROM**

| | |
|---|---|
| AERIAL AMPLIFIERS | FANS |
| AEROSOLS | FUSES |
| ALARMS | GLUE GUN AND GLUE |
| AMPLIFIED SPEAKERS | HEADPHONES |
| ANALOGUE MULTIMETERS | HEATSHRINK SLEEVING |
| APPLIANCE LEADS | HI FI SPEAKERS |
| BATTERIES AND HOLDERS | IONISERS |
| BATTERY CHARGERS | LED's |
| BOOKS | LASERS AND LASER PSU's |
| BOXES AND CASES | LOGIC PROBES |
| CAMCORDER BITS | LOUD AND MARINE SPKRS |
| CAPACITORS | MICROPHONES |
| CAR AMPS, RADIOS & SPKRS | PIR LIGHTS AND DETECTORS |
| CB SPEAKERS AND PSU's | POWERS SUPPLIES |
| COMPUTER BITS | POWER AMPLIFIERS |
| CONNECTORS | RADIOS |
| DESOLDER PUMP | SERVICE AIDS |
| DIGITAL MULTIMETERS | SOLDERING EQUIPMENT |
| DISCO LIGHTING | STEAM ENGINES |
| DISPLAYS | TRANSEIVERS |
| DUBBING KIT | TRANSFORMERS |
| DRILLS | WIRELESS MICROPHONES |

IN SUSSEX?
CALL IN AND SEE US!!

TURN YOUR SURPLUS STOCK INTO **CASH**. IMMEDIATE SETTLEMENT. WE WILL ALSO QUOTE FOR COMPLETE FACTORY CLEARANCE.

MUCH MUCH MORE IN OUR 1993 **CATALOGUE**. PLEASE SEND 41P , A4 SIZED SAE FOR YOUR FREE COPY.

# BULL ELECTRICAL

**250 PORTLAND ROAD HOVE SUSSEX BN3 5QT**

**MAIL ORDER TERMS: CASH PO OR CHEQUE WITH ORDER PLUS £3.00 POST PLUS VAT.**

**PLEASE ALLOW 7 - 10 DAYS FOR DELIVERY**

**TELEPHONE ORDERS WELCOME**

**TEL: 0273 203500**

**FAX: 0273 323077**

VISA

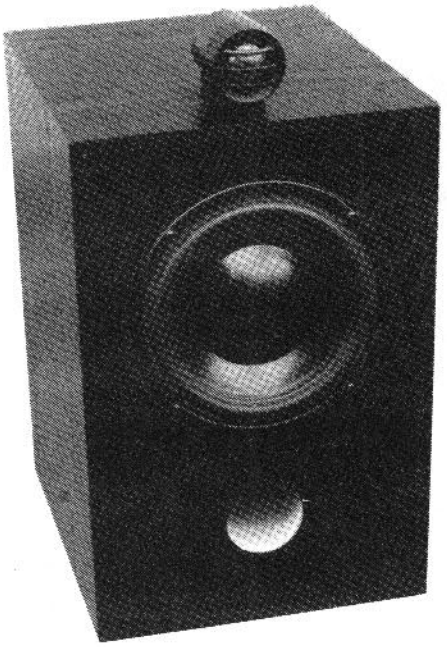

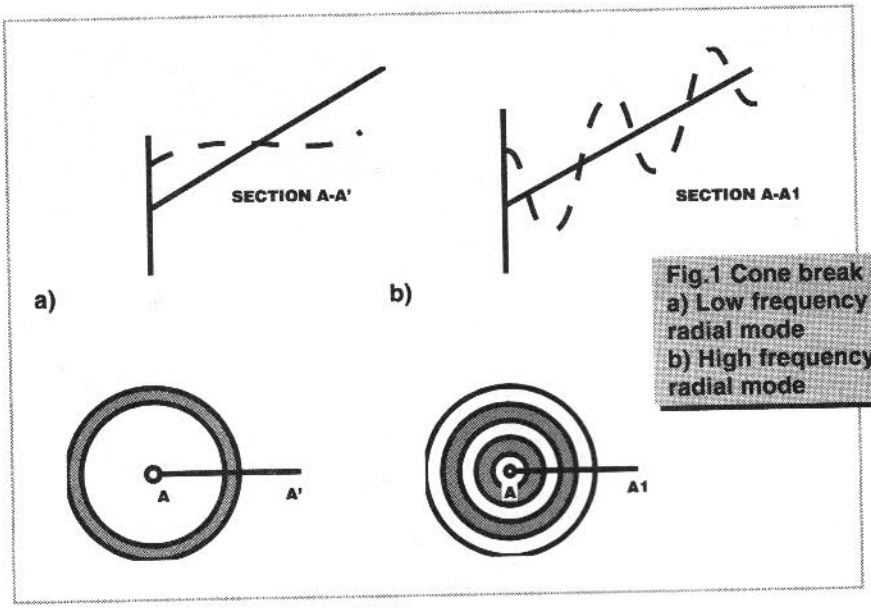


Fig.1 Cone break up
a) Low frequency radial mode
b) High frequency radial mode

# The Crossove

The common or garden loudspeaker is the 2 way moving coil type with a crossover frequency of about 3KHz. Electrostatic speakers apart, a single drive unit cannot accurately reproduce most of the audio frequency range by itself. Thus 2 way designs are prevalent and they work well, but in order to do so they need the necessary evil of a crossover network. This divides the frequency range into segments that the drive units can ably handle. Oddly enough, successful 3 way designs are few and far between, and later I will discuss a possible reason for this.

The crossover can have bad effects on the frequency response, directivity, polar response and imaging of the speaker.

Active speaker designs have appeared over the years in other magazines like the writer's Consort design enable a technique to improve the performance at the crossover frequency. For reasons which will be seen, the crossover is an ideal application of the relatively new Digital signal processing (DSP) chips. Speaker products using these chips are now coming on to the market.

## Cross-over points

The function of a cross-over is to provide a seamless join between the sound of a mid/bass driver and a tweeter, so that an integrated acoustic response, rather than a set of separate sound sources, is produced. That alliteration would be a good test of sibilance! A filter network with a low pass shape is used for the mid/bass and a high pass shape for the tweeter. A few designers use the natural roll-off with frequency of the drive units as all or part of the filter. Unfortunately the natural roll-off usually does not occur at the cross-over frequency required. Just to show it can be done, the critically acclaimed Epos ES11 loudspeaker has a crossover network consisting of one capacitor!

***The crossover can have bad effects on the frequency response, directivity, polar response and imaging of the speaker.***

Generally a fast rate cut-off is required so that resonance and cone break-up effects are not excited. For instance if the cross-over is at 3KHz and the tweeter resonance is 1.5KHz i.e one octave below, the filter slope should be 24dB/octave. This would make any resonance effects virtually inaudible. Ideally one would make the crossover frequency higher than 3KHz if the tweeter resonance was 1.5KHz.

Break-up, by the way, is the name given to a pattern of cone flexure, both along its radius and around its circumference, which can cause severe peaks and troughs in the response curve (see Figure 1).

Some people only concern themselves with the filter amplitude response, but one should consider the phase response at the cross-over frequency. This is where the two drivers, that is, the woofer and tweeter, are contributing equally to the acoustic

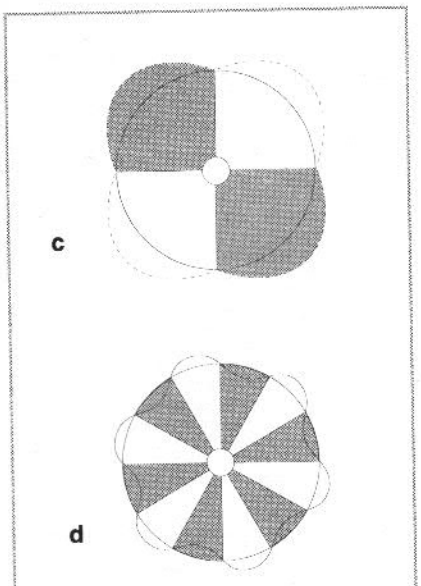


Fig.1c Low frequency axial mode
d) High frequency axial mode

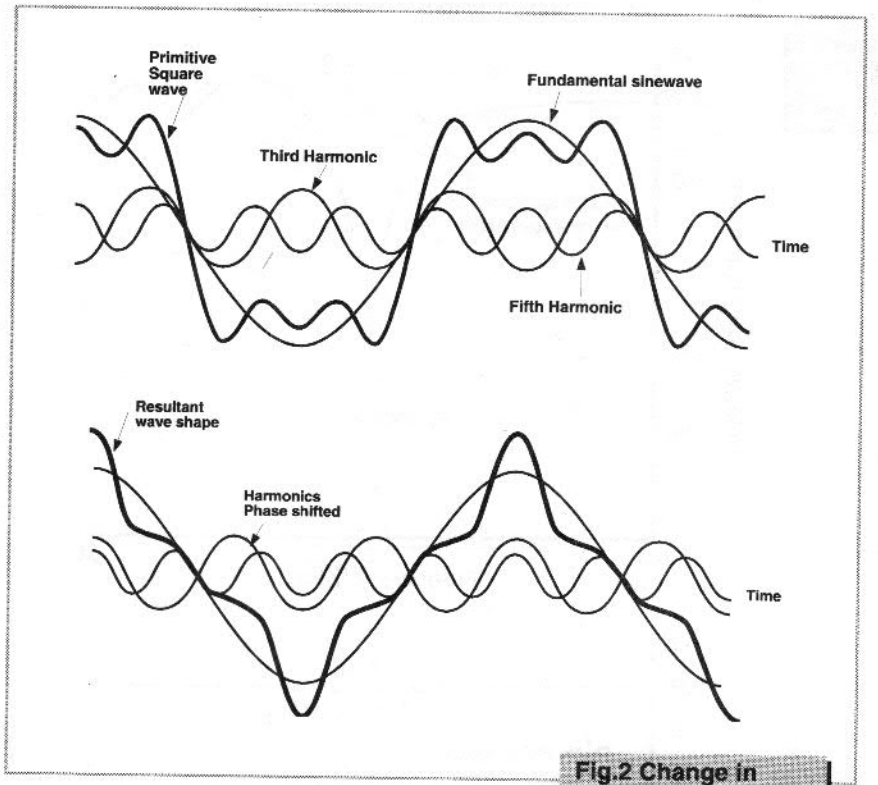


**Fig.2 Change in waveshape when higher frequencies are phase shifted**

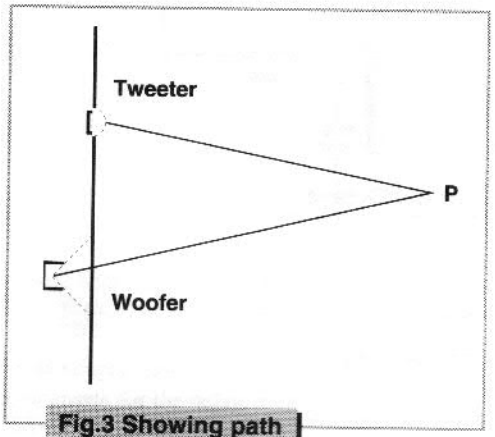


**Fig.3 Showing path length differences**

output. If the two drivers are producing sound waves of equal loudness, 180 degrees apart, then you will get zero output. The positive pressure wave from one driver is cancelled by the negative wave from the other.

Furthermore, a lot of controversy amongst the experts is caused by considering the question, should the loudspeaker be able to reproduce square waves or not? Of course they should, is the usual reply. However, 99% of speakers do not reproduce square waves correctly, and this is also down to the phase problem. As readers may be aware, a square wave is made up of the fundamental frequency plus its odd order harmonics. If the crossover time shifts any of the harmonics with respect to the fundamental, you no longer have a square wave (see Figure 2).

Communication engineers have the problem of trying to preserve a square wave shape and they use maximally flat time delay filters. These have a constant delay with frequency, which preserves the shape. This is referred to as a linear phase filter. The question is, is poor reproduction of a square wave audible? Back to the experts who cannot agree...

## Fazed?

Let us assume there are no phase differences in the two filters feeding the bass and treble speakers. Actually, this is a false premise, but for now it simplifies things. Let us assume also, that the speakers themselves do not have any differences. This is a fair assumption since drivers tend to have

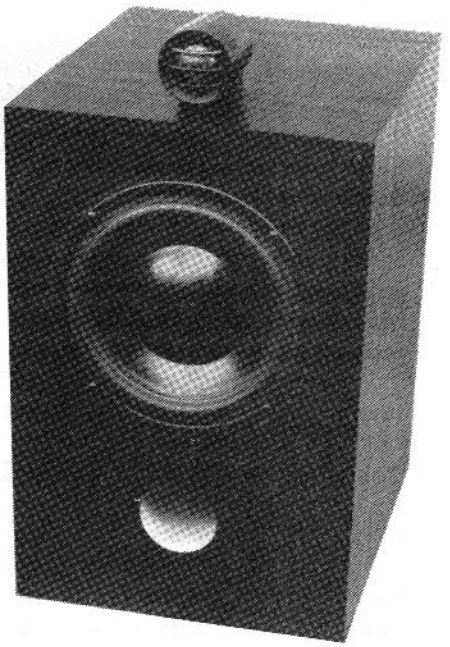

so-called minimum phase characteristics.

Then everything is OK, yes? No, I'm afraid not because the two voice coils are in different positions. The voice coil is the effective source of the sound. Typically, the path length between each of the sources and the listeners ear are different. These differences will be a significant part of a wavelength at the cross-over frequency. If the distance was half a wavelength (ie 180deg.) then you would get no output.

Let's explain. Figure 3 shows two drivers mounted in a baffle. The path length from voice coil to listener at point P will be different, unless the sources are equidistant from P.

Figure 4 shows the cross-over characteristics with path length delays of 1/8, 1/4 and 1/2 a wavelength, for a 6dB per octave cross-over and for a 24dB per octave one. As the 24dB crossover is quicker, the disturbance occupies a much smaller portion of the frequency band. So much for those proponents of simple low order cross-overs (however these have a virtue, which I will come to later). Figure 5 shows the response of a commercial speaker, which has a noticeable dip in the response, commonly referred to as a 'suck-out'. You often see a slight dip in the response at cross-over.

All this explains why there was a vogue a few years back for peculiar



# r Conundrum

by Peter Roberts B. Eng (Tech)

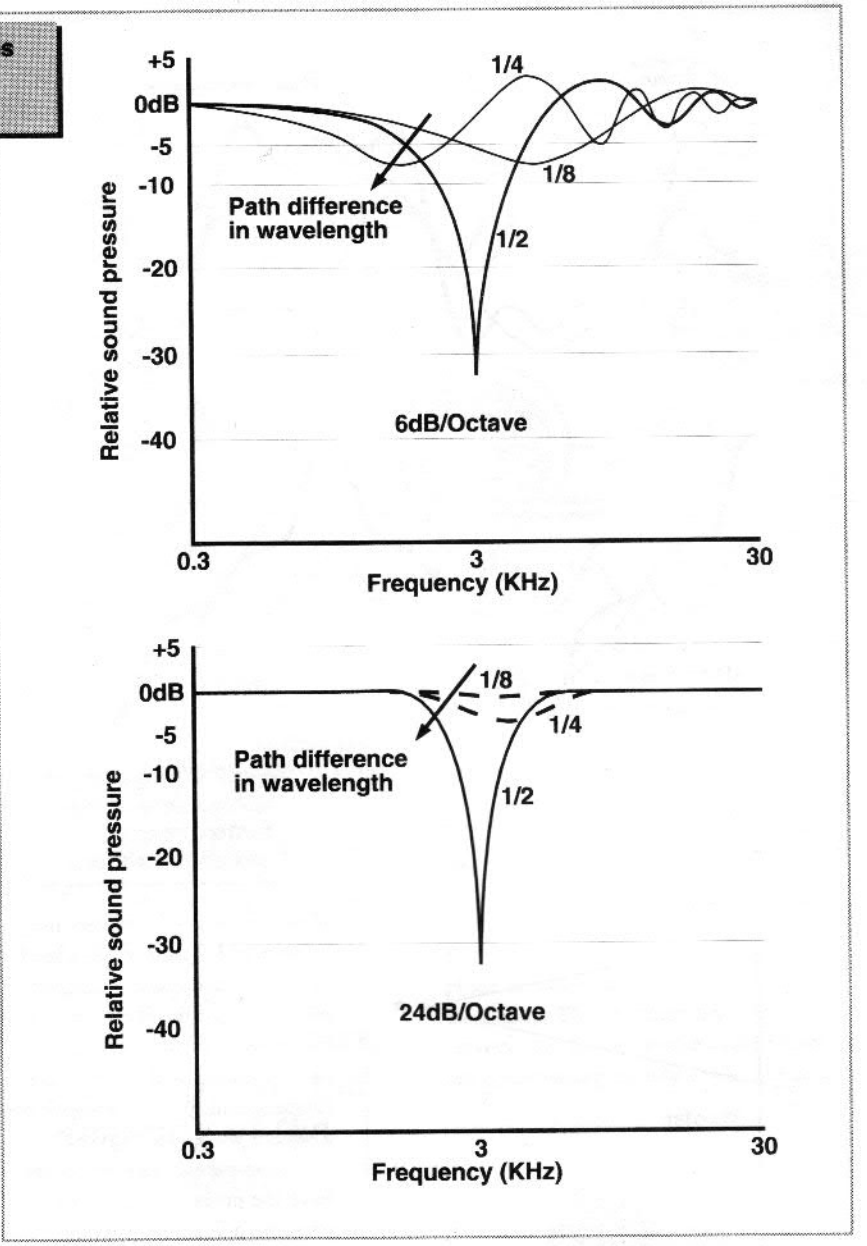


**Fig.4 Different path diffences with 6dB/octive and 24dB/ octave crossovers**

drive unit voice coils in line (or coplanar),- the so-called linear phase speaker. A sloped baffle can give the same effect and these are more common now. Recently KEF loudspeakers produced a Uni-Q combination driver. This is a coaxial, coplanar unit with the tweeter virtually inside the woofer voice coil, to overcome the problem. The Tannoy co-axial drivers of yore (still going strong), got fairly close to this ideal, but are not coplanar.

Recently Morel brought out their top mount tweeter, which can be fixed on top of a cabinet in a position which gives time alignment. The B&W 805 speaker, I believe, originated this approach.

With active speakers there is no need for such measures. One can simply electronically delay the tweeter signal so that even with the voice coils not being mechanically aligned, the two drivers are in phase.

## Delay lines

The question is, how to delay the signal. Bucket brigade type delay chips could be used but I feel they are too noisy, and the digital approach of analogue to digital converter (ADC), memory storage, delayed memory recall and digital to analogue conversion (DAC) seems too complex, if discrete chips are used.

Interestingly, Celestion has just introduced their DLP 600 digital loudspeaker processor which uses an Analog Devices DSP (Digital signal processing) chip to do the job. This device sits in the digital link between CD transport and a separate DAC, thus eliminating the ADC.

Philips has moved a stage further with their DSS930 digital active loudspeaker which uses a DSP chip to provide the crossover filters, flatten the frequency response and give linear phase across most of the audio frequency range. As such, it is an ideal application of the DSP technique which uses a highly integrated piece of silicon to replace an elaborate edifice of analogue electronics. Square wave rendition is good with this speaker. The bass response of the basic DSS930 system does not live up to the rest of the frequency range, however. Other companies active (no pun intended) in the DSP speaker field are B&W and Meridian.

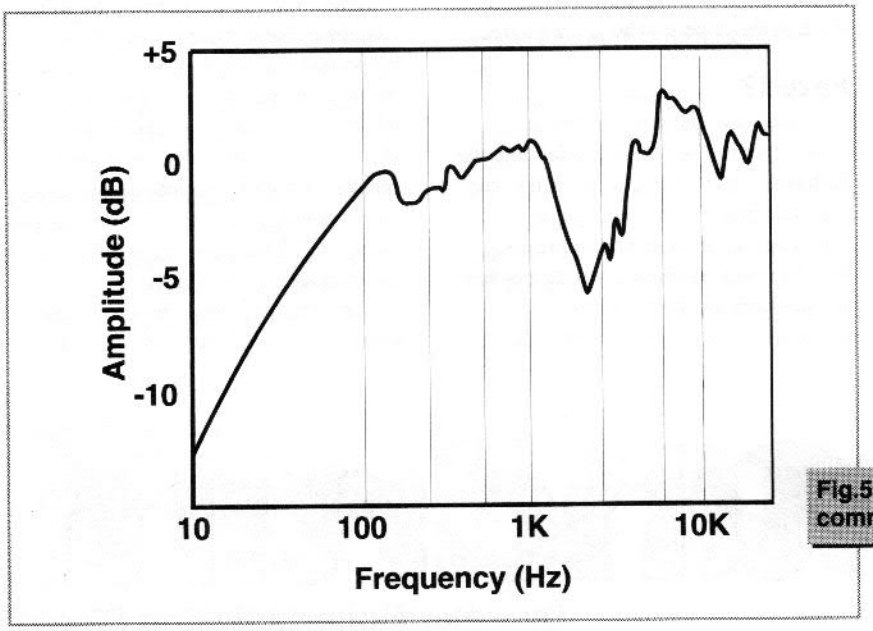


**Fig.5 Frequency response of commercial loudspeaker**

## Network time

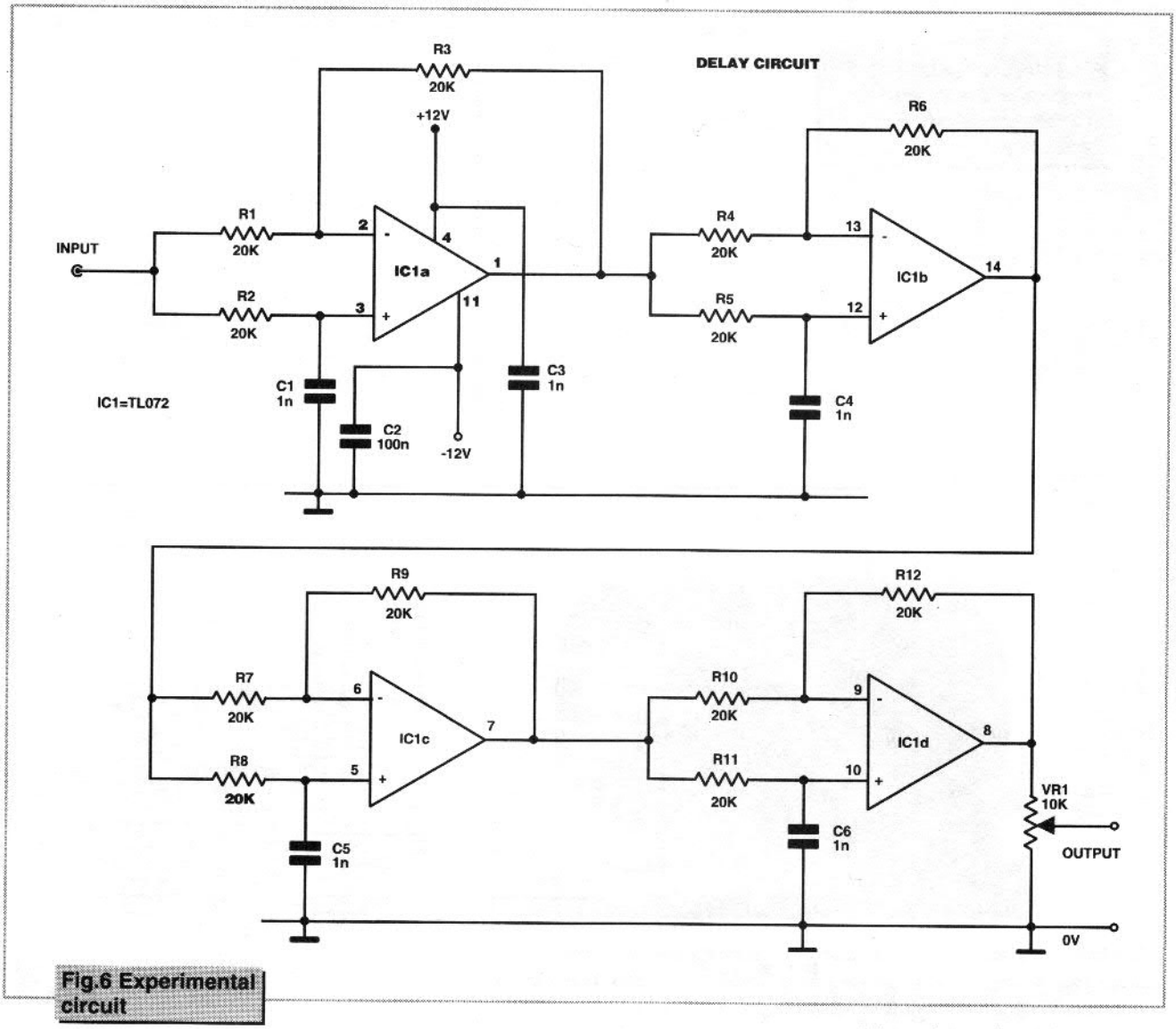


**Fig.6 Experimental circuit**

If you simply want to compensate for the delay, then Linkwitz in his classic article, Loudspeaker system design (Wireless World May/June 78) showed how this can be done using all pass filter networks (see Figure 6, a cascade of 4 such filters). Here is a use for an apparently useless filter, since although the amplitude response does not change with frequency, the phase does, and this property can be used to effect the delay.

Now what you need to know is the relative distance between the voice coils, the velocity of sound in air and the cross-over frequency. Knowing these one can calculate the time taken for the sound to travel from the woofer to the tweeter. From this, the wavelength fraction, and therefore the phase delay, can be deduced.

## Poles apart

Is everything OK now? Well, not quite. Consider Figure 7. The listener has moved to a point P1. The path lengths

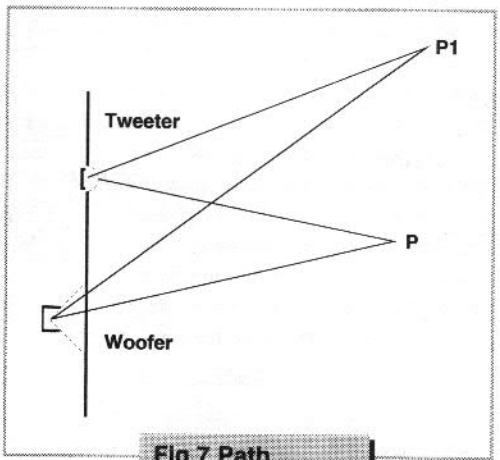


**Fig.7 Path change when listener moves**

are different again! If you plot the points in the sound field which have the same sound pressure level (SPL) you get the polar diagram of the speaker system at the cross-over frequency. This is shown in Fig 8. This pattern will have fewer lobes the closer the drivers are mounted vertically together. All this shows that the business of integrating drive units is a complex one, and the more drive units you have, the worse it gets! Perhaps this is why there are not so many good 3 way designs around.

Authorities seem to differ about directivity, which is another way of quantifying the polar response, or the sound field produced. Linkwitz reckoned that a wide field was good, while others say that a narrowish field is better. The ultimate in wide field design is the Canon design which is claimed to give a good stereo image over more of the room than conventional speakers. Supporters of the narrow field say that if you have a wide field the sound will bounce off other objects in the room. This will add to the direct image and muddy it. The ear is good at resolving where the image is, however. A related instance is the cocktail party effect where, at the party, there are several conversations going on at once, all within earshot. One can 'tune in' to each of these conversations in turn. If you are lucky enough to move in such circles and find you cannot do this, I suggest you get your brain checked or stop your consumption of certain beverages! This effect has been referred to as steerable

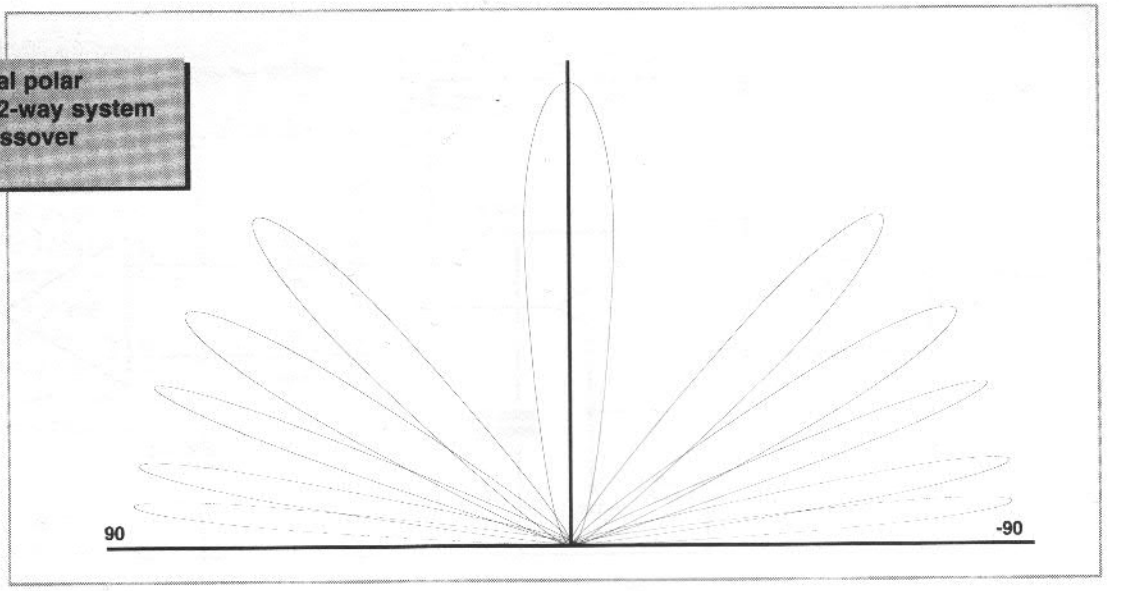


**Fig.8 Vertical polar diagram of 2-way system at 3KHz crossover frequency**

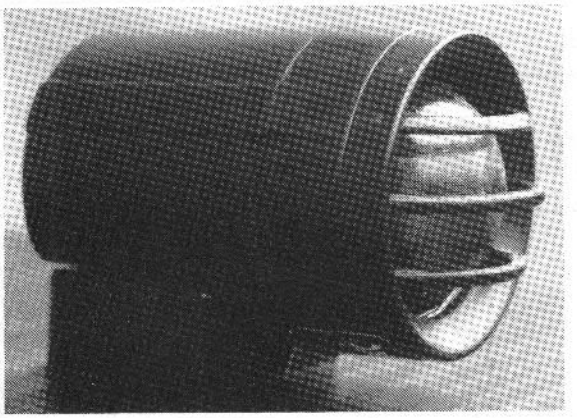

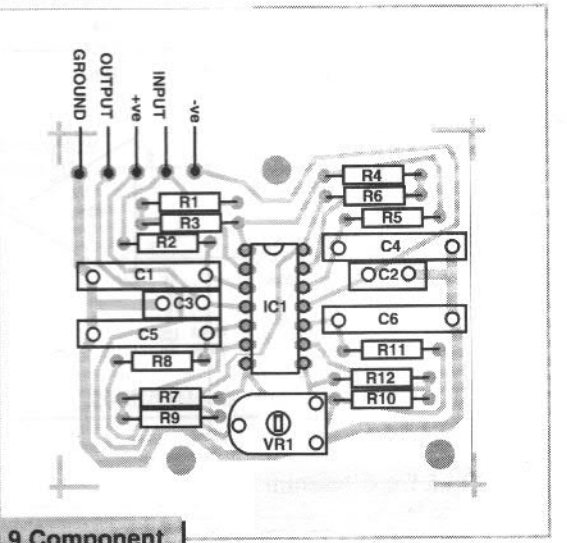


**Fig.9 Component positioning**

effect has been referred to as steerable directivity.

I have designed a circuit (Figure 6) according to the principles of Linkwitz. Several stages are required to effect the delay. Four stages of 35us each are used for the Consort.

This additional circuit gives an improvement in the image depth on appropriate recorded material. For those who would like to try it, a layout is given in Figure 9. The potentiometer is removed from the original Consort board and the input, output and ground connections to the new board taken from the pot pads. The delay circuit gets its power from the onboard regulators on the Consort board. The circuit could be tried on the Flatmate speaker (ETI May 90) by making the resistor value 16Kohms.

I repeat, is everything OK now? Again the answer not quite! Something we have not considered is the phase response of a typical crossover filter will not be constant. It will not have linear phase characteristics and the phase response varies with the type of filter used. Further, different cross-over filter types give disparate directivity patterns at the crossover frequency, also the pattern can move as the frequency changes.

Moreover, the impedance of the drive units will vary with frequency and this will affect the filter response. See Figure 10 for some common passive crossover filter types and their pros and cons. The values given assume 8 ohm

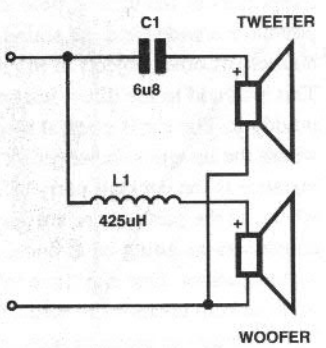


1st ORDER 6dB/OCTAVE
No frequency response or transient distortion but filter cutoff too slow

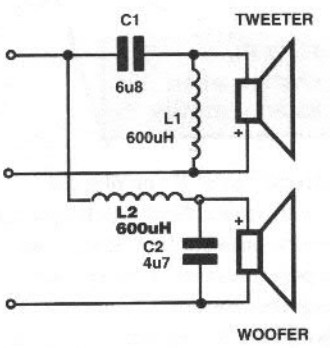


2nd Order 12dB/octave crossover
3dB peak @ crossover with reversed tweeter (otherwise suckout occurs)
Radiation pattern does not vary with f

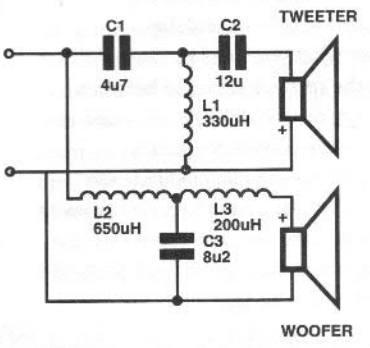


3rd order 18dB/octave crossover
low delay distortion with drivers out of phase. Radiation pattern not symmetrical

**Fig.10 Passive crossovers**

Fig.11 a)Standard subtractive method b)Extra time delay to give linear phase

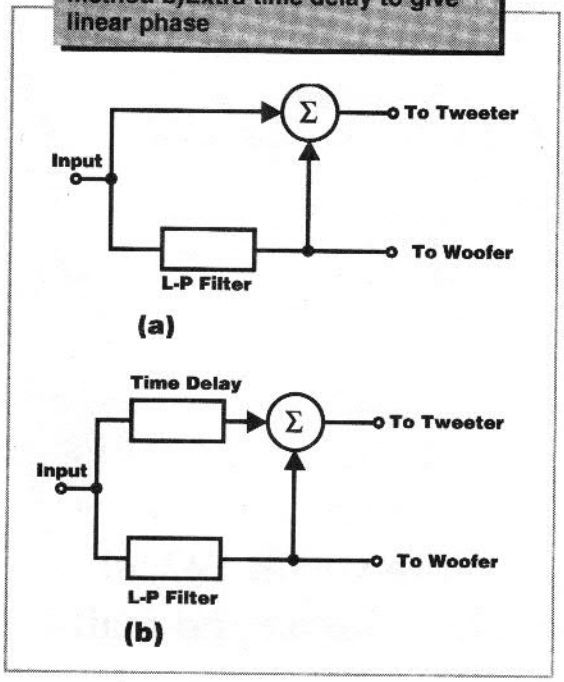


drivers and 3KHz crossover frequency. The fourth order active type, the so-called Linkwitz-Riley crossover is used on the Consort. This has the advantage of fast cut-off, also there is no phase difference between the two outputs.

This analysis shows it is tricky to design crossovers, but perhaps you can now see why you see a dip or peak in a loudspeakers published response curve around 3-5KHz. Lastly, one active cross-over technique I have not mentioned, is that of subtraction. The high pass signal, for the tweeter, is generated by filtering and then subtracted from the original signal, to give the low pass signal, for the woofer. Two well-known theorists in the audio field, Lipshitz and Vanderkooy realised that most of the problems in crossovers happen because of the phase shift (or time delay) in the normal low pass filter. They derived the high pass signal from the low pass by subtraction, and put a compensating time delay in the high pass side, to equalise the delay. (Figure 11). This gives perfect amplitude response and linear phase response, so it should give good square wave reproduction. This delay is not the same one as the driver alignment delay. This last technique seems promising and worthwhile for a future project.

## Parts

**Resistors**

| | |
|---|---|
| R1,2,3,4 | 20k |
| R5,6,7,8 | 20k |
| R9,10,11,12 | 20K |
| VR1 | 10K |

**Capacitors**

| | |
|---|---|
| C1,3,4,5,6 | 1nF |
| C2 | 100nF |

**Semiconductors**

IC1 TL074

**PCB available from Electronics in Action in this magazine**

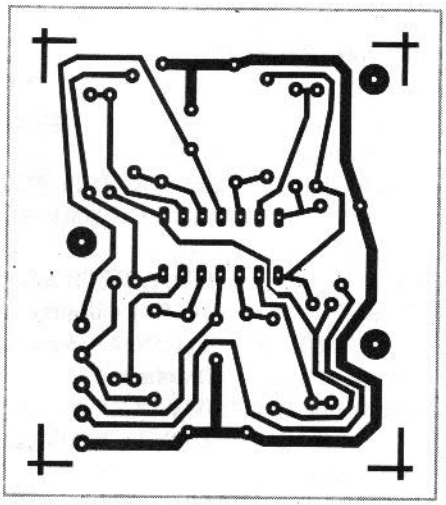


Access VISA

**Cooke International**

**SUPPLIER OF QUALITY USED TEST INSTRUMENTS**

ANALYSERS, BRIDGES, CALIBRATORS, VOLTMETERS,GENERATORS,OSCILLOSCOPES, POWER METERS, ETC. ALWAYS AVAILABLE

ORIGINAL SERVICE MANUALS FOR SALE COPY SERVICE ALSO AVAILABLE

EXPORT,TRADE AND UK ENQUIRIES WELCOME SEND SAE FOR LISTS OF EQUIPMENT AND MANUALS

REPAIRS & CALIBRATION UNDERTAKEN ENQUIRE FOR DETAILS

ALL PRICES EXCLUDE VAT AND CARRIAGE
DISCOUNT FOR BULK ORDERS. SHIPPING ARRANGED

OPEN MONDAY TO FRIDAY 9AM-5PM

**COOKE INTERNATIONAL**
**ELECTRONIC TEST & MEASURING INSTRUMENTS**
Unit Four, Fordingbridge Site, Main Rd, Barnham, Bognor regis, West Sussex PO22 0EB
Tel:(+44) 0243 545111/2 Fax:(+44)0243 542457

● HIGH END TEST & COMMUNICATIONS EQUIPMENT PURCHASED ●

**Wilmslow Audio**

*Britain's leading loudspeaker kit and drive unit suppliers. Four demonstration rooms.*

Wilmslow Audio ATC

If you require the legendary and renowned performance of ATC based loudspeaker systems in kit form, Wilmslow Audio have the answer.
A close collaboration with ATC has resulted in the:

**ATCK50 & ATCK100**

Contact Dr Stephen Leigh for details to arrange a demonstration.

**Now available**
Loudspeaker Design Cookbook
The bible for the home constructor.

**Write or call for details**

**Dept EIA, Wilmslow Audio**
**Wellington Close**
**Parkgate Trading Estate**
**Knutsford, Cheshire WA16 8DX**

**Tel: 0565 650605**
**Fax: 0565 650080**

# An Exclusive Reader Offer

This remarkable multimeter, from Cirkit not only has the usual full compliment of ranges:DC and AC voltage, DC and AC current and resistance but also capacitance measurement from 2n to 20uF and frequency measurement up to 15MHz. But is doesn't stop there. The meter also includes: continuity test, diode test. HFE test logic test and LED test. Virtually everything needed for all disciplines of fault finding and testing. The meter is housed in a strong, yellow ABS case complete with 1 year warranty, test leads, battery and manual. A complete test lab in your pocket in fact!
Just take a look at the specifications below.

## The TM175 Multimeter

SPECIFICATION

| | |
|---|---|
| **DC volts** | |
| Ranges: | 200mV, 2V, 20V, 200V, 1000V |
| Accuracy: | +/-(0.5% + 1 digit) |
| I/P impedance: | 10Mohms |
| Overload protection: | 500V DC/350V AC (200mV)<br>1200V DC/800V AC (Other ranges) |
| **AC volts** | |
| Ranges: | 200mV, 2V, 20V, 200V, 750V |
| Accuracy (50-500Hz): | +/-(1% + 4 digits).<br>+/-(1.5% + 4 digits), 750V |
| I/P impedance: | 10Mohms |
| Overload protection: | 500V DC/350V AC (200mV)<br>1200V DC/800V AC (other ranges) |
| **DC current** | |
| Ranges: | 200uA, 20mA, 200mA, 10A |
| Accuracy: | +/-(1.0% + 1 digit).<br>+/-(2.0% + 3 digits), 10A |
| Overload protection: | 0.8A/250V fuse, 20A for 30 secs (10A) |
| **AC Current Ranges:** | 20mA, 200mA, 10A |
| Accuracy (50-500Hz): | +/-(1.2% + 4 digits),<br>+/-(2% + 4 digits), 10A |
| Overload protection: | 0.8A/250V fuse, 20A for 30 secs (10A) |
| **Resistance** | |
| Ranges: | 200ohms 2k, 20k, 200k, 2M,20M, 2000M |
| Accuracy: | +/-(0.8% + 1 digit), 2k-2M |
| Overload: | 500V DC/AC (max) |
| **Frequency** | |
| Ranges: | 2kHz, 20kHz, 200kHz, 2MHz, 15MHz |
| Accuracy: | +/-(1.0% + 1 digit) |
| Sensitivity: | 35mV(typ), 2kHz to 2MHz. |
| **Capacitance** | |
| Ranges: | 2nF, 20nF, 200nF, 2uF, 20uF |
| Accuracy: | +/-(3.0% + 10 digits) |
| **Other ranges:** | Continuity test, diode test, Hfe test, logic test LED test. |
| Dimensions: | 168x80x40mm |
| Accessories supplied: | Battery, test leads and manual |

**The usual price of this multimeter is £53.60, but we can offer it to you at £42.90 So fill in the coupon and mail it today.**

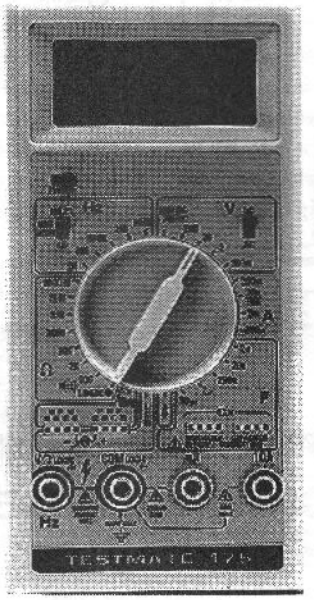


## Cirkit Multimeter Offer

Please send me.....TM175 Multimeter(s) at the offer price of £42.90. each + £1.40 p&p. I enclose a cheque for ..... .....made payable to Cirkit Distribution Ltd.
Print your name and address in **BLOCK CAPITALS.** Allow 28 days for delivery

Name .....

Address .....

..... Postcode .....

Please send your coupon and remmitance to :
**EIA Reader Offer, Cirkit Distribution Ltd, Park Lane, Broxbourne Herts EN10 7NQ**

**Terms and Conditions**
Only correct applications will be considered. ie those filling in their name and address clearly and enclosing a cheque for the correct amount.
The offer is subject to availability and closes on 23rd October 1993
The offer is open to those resident in the UK only.
Allow 28 days for delivery.

# What is a SMARTBook?

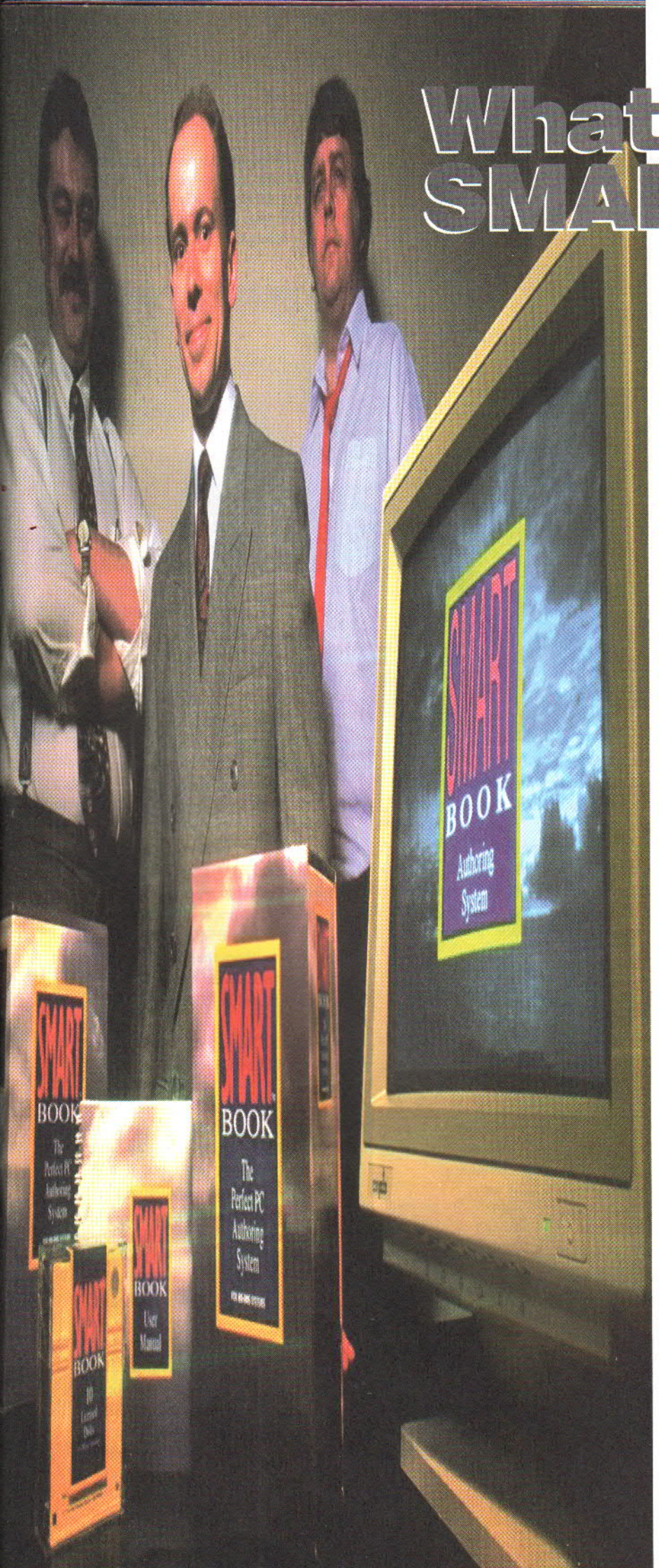


**Bob Garrioch from Frax Ltd. tells of the exciting new developments made in getting an illustrated book published on disk.**

The idea of putting books onto a floppy disks is not new, but integrating photo-quality images with the text is.

This new product called SMARTBook will combine text, fractally compress images and PCX files to create an electronic book. Hypertext or SmartWords are used as links between pages, words and areas. The images are compressed using Fractal Transform technology and so up to 100 full colour images together with text and playback software can be included on a single stand-alone diskette. It does not require additional software or hardware to run and can be viewed on any 386SX (or upwards) machine and SVGA 256 colour graphics card.

In short you can now have any combination of photographs and text all together on one floppy disk. The main advantage to this is that whilst not everyone with a computer has a CD-ROM drive, almost everyone is bound to have a floppy disc drive. The best electronic book in the world is not much good if hardly anyone can read it!

The concept represents a giant step forward in the world of electronic media, and is proving to be of tremendous benefit in many areas of Education, Medicine, Distance Learning, Catalogues and Technical Reports to name but a few.

Files of 10Kb can also be handled easily and economically on PC's, networks and communication lines, yielding tremendous savings in storage and communication costs. In the time it used to take to transmit 1 or 2 images you can now transmit an entire book containing 100 images!

Uniquely, Fractal Image files are resolution-independent, and Frax as a company is involved primarily with the

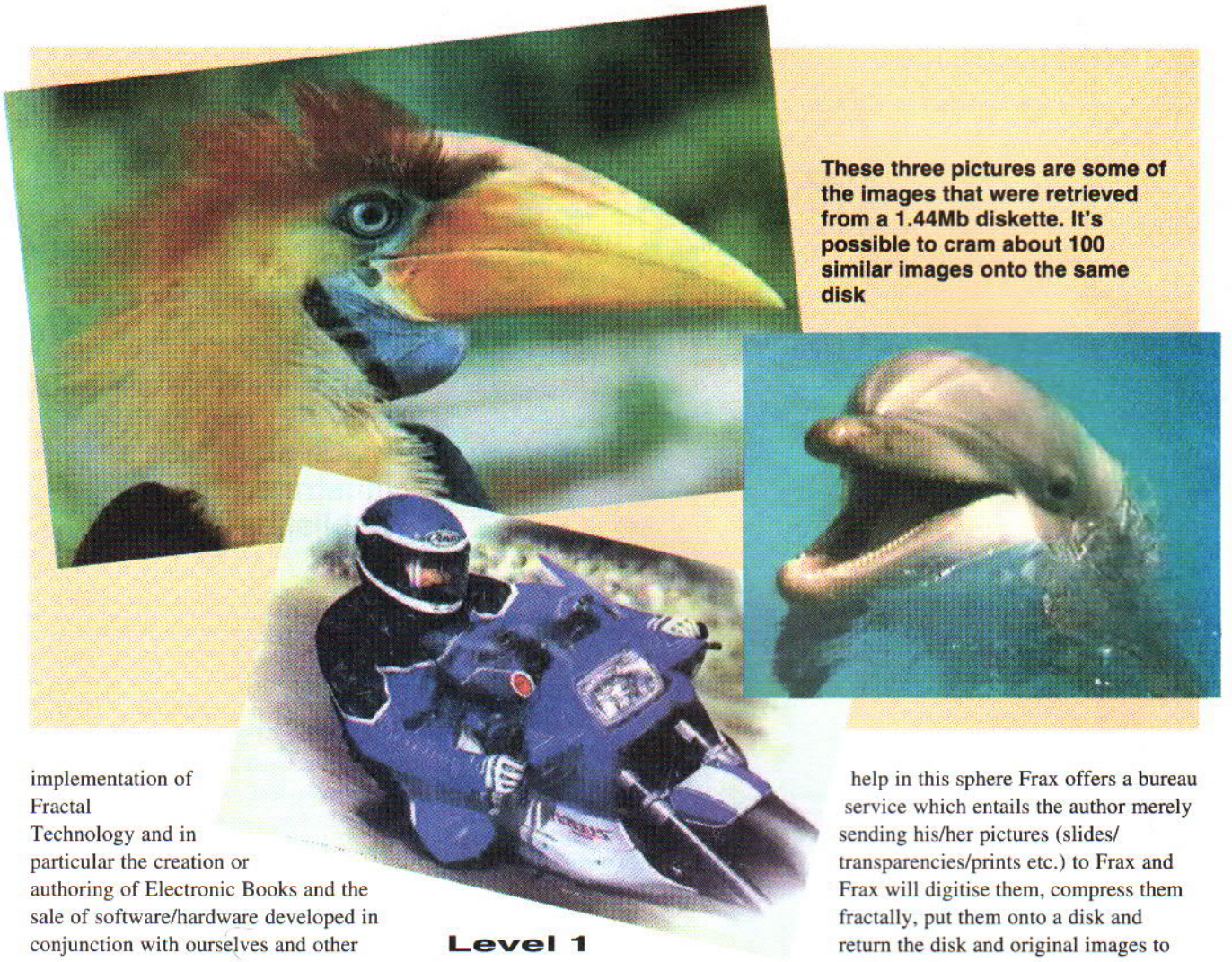

**These three pictures are some of the images that were retrieved from a 1.44Mb diskette. It's possible to cram about 100 similar images onto the same disk**

implementation of Fractal Technology and in particular the creation or authoring of Electronic Books and the sale of software/hardware developed in conjunction with ourselves and other companies involving Fractal Transform Technology.

## Why Fractals?

Image compression has always been a tremendous problem in terms of storage for a standard PC type computer. The solution to this problem, adopted by Frax, was discovered by Dr. Michael Barnsley of Iterated Systems, who has researched the image compression potential of Fractals for over a decade. This led him to the discovery of the Fractal Transform, a mathematical technique for automating the recognition of Fractal patterns in real-world images (photographs). The compressed images produce very small Fractal Image Format (FIF) files, typically reducing a 640 x 400 24-bit true colour image file from 768Kb down to just 10Kb.

## So what do you need to make a book?.

There are a variety of levels that would-be authors can commence at, and this is primarily associated with the equipment already in place and of course the usual other constraint called money.

Frax has tried to adopt a 3 tier system designed to suit the various levels of the pocket.

### Level 1

For the person with all the necessary equipment and wants to author.

**Existing Equipment**

1 A 386SX or greater PC.
2 Some form of Video Capture Card.
3 Some form of digital camera or scanner.

**What else is required?**

1 An Image compression package called Images Incorporated V3 costing £299.00
2 The SMARTBook authoring system costing £499.00.

### Level 2

For the person who does not have all the equipment but wants to author.

**Existing Equipment**

A 386SX or greater PC.

**What else is required?**

Only the SMARTBook authoring system costing £499.00.

**Question.** How do I get the images if I don't have the equipment?

One of the things experienced by Frax is that not all authors have the budget to invest in image capture boards and expensive cameras, therefore to help in this sphere Frax offers a bureau service which entails the author merely sending his/her pictures (slides/ transparencies/prints etc.) to Frax and Frax will digitise them, compress them fractally, put them onto a disk and return the disk and original images to the author ready for insertion into their book.

### Level 3

For the person who does or does not have the equipment, does not want to author, but wants an electronic book.

The text and images are supplied and Frax authors the whole book. The cost of this is based on the number and complexity of the pages involved.

**Question**:- But what if I want a thousand copies how do I do it?

Once the author has made his or her 'Master Book' they simply send the book to Frax, who then takes care of all the rest. Frax will arrange for the verification (i.e. virus checking) of the disk, duplicate the book to disk, and send all the disks back to the author in boxes of either singles, 10's, or 100's.

**Question**:- OK so how much does all this cost?

In an effort to differentiate an electronic book from that of an ordinary disk, Frax has arranged that all discs will be **yellow** 1.44Mb disks bearing a hologram. As a guide the following prices apply:-

| Volume | Total Cost |
|---|---|
| 0-4999 | 1.35 |
| 5,000-9,999 | 1.25 |
| 10,000-49,999 | 1.15 |
| 50,000-99,000 | 1.10 |
| 100,000-249,999 | 1.05 |
| 250,000-499,999 | 0.95 |
| 500,000-999,999 | 0.81 |
| 1,000,000+ | 0.73 |

**The above list includes:-**

1. 1.44Mb High Density Yellow disc.
2. Hologram applied.
3. Verification of Virus Free status.
4. Duplication of the master book to disc.
5. All royalties payable.

If the author also wants labels to be designed and applied and the disk put into separate holders then that too can be organised by Frax - in effect a one stop electronic publishing system.

As a special offer the latest SMARTBook authoring system, version 3 will be going out bundled with the following products:- Images Incorporated Version 3, and Neopaint. This will give the author the ability to not only convert and compress their Fractal Images but also to do very sophisticated art work with their PCX files in Neopaint before creating their book utilising the SMARTBook authoring system. The normal retail price of the above packages would be £850.00 however the bundle will retail at £630.00 a saving of 25%.
For further information about SMARTBook please contact:-

**Frax Limited**
**8 Rubislaw Terrace**
**Aberdeen**
**Fax:- 0224-620789**
**Tel:-0224-621144**

In order to get the feel of the SMARTBook, Frax has produced a SMARTBook Demo disk and is offering it to readers in association with Electronics in Action. Should you be interested in the authoring system why not fill in the coupon to receive your free demo disk.

## POGIS: A new venture

However Frax does not only produce software. As an example of the diversity of the company one of the more adventurous projects they are involved in is something called **PAN OPTIC GEOGRAPHICAL INFORMATION SYSTEM** or **POGIS.**

An EEC Grant potentially in excess of over £300,000 has been awarded to Frax as project leader of POGIS.

The project will provide a delivery vehicle and an information service to support the emergency planning and management aspects of the Civil Protection Agencies, more commonly known as the Police, Fire, Ambulance and Local Authorities. They are responsible for the control of things like floods, major fires, pollution incidents, air crashes and other similar events. These events routinely involve the organisation of disparate resources operating in scattered locations. 'Incident managers' as the services like to call themselves require detailed and timely information about a wide range of objects. The increasing complexity of this task in information gathering means that active decision support systems are wanted more than ever. For if mistakes are made, and under the watchful eye of the public, it can cost dearly both in terms of public and private costs, increased risk to life and failure to reduce the losses in a disaster.

Of course, this requirement exists in all countries, although the complexity of the problem is greatest in populated industrialised communities. Most agencies still use paper based geographic information together with simple text based information in either computers or conventional systems. Much of the data is currently unconnected and in non standardised formats.

The project aims to integrate a number of existing systems and mould them into a new product for the Civil Protection Agencies.

This product will then be able to help the authorities to make the correct decision in the event of a disaster. The database will have a knowledge of where things are at any one time and how they relate to each other. The system will have active decision support capabilities.

The delivery system called 'SmallWorld', acts at the heart of the database. It's current display will be supplemented by fractal images stored in the computer and the total package will integrate outside data using standardised interfaces. The project aims to help in the current moves to standardise the description of objects in this area.

The project team includes technical and subject experts in the database, GIS, image data collection and associated areas. The prototype will be tested on any major incidents that might occur in Scotland and for Post-earthquake planning in Greece.

Eventually, this information system will be sold as a package and could be used as a database population service, in application expertise or in technical support services.
The **POGIS** team will be made up of:-
**Frax Ltd.**
Fractal Expertise.
**Sylaco Aberdeen**
Satellite positioning specialists.
**Tangent Technology Design**
Touch pen hand held PC's for data collection.
**SmallWorld Systems**
GIS system manufacturers.
**Grampian Regional Council**
**& two Greek Partners.**

## Free Smart Book Demo Disk Offer

Print in **BLOCK CAPITALS** Allow 28 days for delivery

Name .....

Address .....

..... Postcode .....

Send in the completed coupon with 2 x 20p coins stuck to a card for postage and packing to: **Frax Demo Disk Offer, Electronics in Action, PO Box 600, Berkhamsted, Herts. HP4 1NL**

**Terms and Conditions**
Only correct applications will be considered. ie those filling in their name and address in block capitals and sending in 2 x 20p coins to cover postage and packing.

The offer is subject to availability and closes on 5th November 1993
The offer is open to those resident in the UK only.
No responsibility can be accepted for applications lost, damaged or delayed in the post. Proof of posting is not proof of receipt.
Allow 28 days for delivery. This offer is not intended to create a legally binding contract.

# Ideas Forum

**Time to don your thinking caps, break out the scribble pads and expand on a few ideas. This is just the start of Electronics in Actions' monthly brainstorm column.**

Ever wondered what to do with your spare time? Why not examine the ideas below and see if they provide a spark of an idea that you can develop and take from here. It could be that you are at home, school, college or university and have to make an electronic or allied project for your coursework and you are wondering what to do.

This is an ideas page and hopefully it will be a regular feature. As soon as you think or know the idea can be acheived by yourself, and it might be a variation on these themes, get a working prototype together. If you think others might like to see your efforts in print, send it in with the details to us and we will seriously consider publishing it. You will of-course be rewarded for your efforts in print. The ideas below may even be a cause to write in to our letters page to discuss the ideas you have.

Some of them may well have been designed and built at high commercial level and high cost but it may be you have thought of a quick and easy route to acheiving the same end and at much cost aswell..The exercise here could also lead to other less costly innovative ideas.

They will not appear in any particular order so keep a look out: every month. Very soon Electronics in Action could be printing lists of 'Centres of Excellence' where it would be the place to be for an informal chat and to openly discuss these and other ideas in a sort of brainstorming session.

- **Portable Digital Barometer**
- Altimeter
- **Moving LED Message Display programmed by computer**
- Microwave Doppler distance measuring device
- **Remote sensing of objects in in enclosed box/cavity using Ultrasonics**
- Detection of VLF, ELF electromagnetic radiation with direction finding - Digital encoding
- **Detection of very high frequency sound waves >40kHz**
- Detection of subsonic waves Remote sensing microscopic motion detector to count microscopic movement
- **Digital coded transmission of information from room to room within house by most convenient method.**
- Turn thoughts into actions with an Alpha, Beta, Theta brain wave detector/servomechanism
- **Sensitive temperature change detector for motionless body activity**
- Electronic Taste detection Acid/ alkalie- sweet/sour change. What makes a strawberry taste like a strawberry?
- **Gas sensing/analysis**
- Remote Car identification - Reading bar codes underneath the car. What makes each mass produced car unique apart from registration plate?
- **Tyre pressure guage. Is it possible to read tyre pressure electronically by rolling car over pressure mat?**
- Positional beacon for distress call say from car
- **Portable obstacle monitor for the blind**
- Portable Line of sight communication

**WE HAVE THE WIDEST CHOICE OF USED OSCILLOSCOPES IN THE COUNTRY**

TEKTRONIX 7000 SERIES OSCILLOSCOPES
Dual Trace plug-in with TB from £200
Many plug-in options available. 4Traces;
Differential etc. PLUG-INS SOLD SEPARATELY

PHILIPS 3065 2-1 channels 100MHz Dual TB Delay Sweep....£700
KIKUSUI COS6100M 3 Channel + CH4/CH5 Trig View 100MHz Delay Sweep....£600
TEKTRONIX 475 Dual trace 200MHz Delay Sweep....£550
HP 1715A Dual Trace 200MHz Delay Sweep....£500
HP 1740A Dual Trace 100MHz Delay Sweep....£400
TEKTRONIX 2215A Dual Trace 60MHz Delay Sweep....£500
PHILIPS PM3217 Dual Trace 50MHz Delay Sweep....£400
HITACHI V422 Dual Trace 40MHz....£325
TELEQUIPMENT D83 Dual Trace 50MHz Delay Sweep....£200
GOULD OS3000A Dual Trace 40MHz Delay Sweep....£200
KIKUSUI 5530 Dual Trace 35MHz....£180
GOULD OS1100 Dual Trace 30MHz....£160
HITACHI V223 Dual Trace 20MHz CRT Delay Sweep....£300
GOULD OS300 Dual Trace 20MHz....£200
GOULD OS250B Dual Trace 15MHz....£125
TEKTRONIX 466 Dual trace 100MHz Storage....£450

THIS IS JUST A SAMPLE, MANY OTHERS AVAILABLE

PHILIPS PM 5139 Programmable synthesizer/Function Generator 0.1MHz-50MHz IEEE-488 as new....£1500

MARCONI 2019 Synthesized AM/FM Sig/Gen 80KHZ-1040MHz..£2000
MARCONI 2022 AM/FM Sig/Gen 10KHz-1GHz....£1200
MARCONI 2018 Synthesized AM/FM Sig/Gen 80KHz-520MHz..£950
EIP/DANA 3510Microwave Frequency counter 20Hz-18GHz....£950
RACAL 9921 Frequency Counter 3GHz....£300
HP 339 Distortion Measuring Set 10Hz-110KHz....£1500
RACAL/DANA 1991 Nanosecond Universal counter....£800
RACAL 9302 Millivoltmeter True RMS 10KHz-1.5GHz....£450
RACAL 9301A RF Millivoltmeter True RMS 10KHz-1.5GHz....£300
RACAL 9009 Auto Mod. Meter 10MHz-1.5GHz Wide deviation....£250
LYONS PG73N Pulse Gen. PRF 1Hz-20MHz....£150
MARCONI 2610 True RMS Voltmeter....£800
GOULD Bicmation K5000D Logic Analyser....£500
FARNELL PSG520H Synthesised Sig Gen AM/FM 100KHz-520MHz..£600
LEADER LSG216 AM/FM Sig/Gen 0.1-30MHz & 75-115MHz..£400
KEITHLY 197 5 1/2 digit Autoranging Microvolt DMM with IEEE..£250

## SPECTRUM ANALYSERS

HP 141T with 855A & IF Plug-in 10MHz-18GHz....£2000
HP 141T with 854B & 8552B 500KHz-1250MHz....£1300
HP 140T with 8554L & 8552A 500KHz-1250MHz....£1000
HP 141T with 8556A & 8552B 20Hz-300KHz....£1000
HP 140T with 8553L & 8552A 1KHz-110MHz....£1000
MARCONI TF2370 30Hz-110MHz....£1500
HP 1820 with 8558B 100KHz-1500MHz....£1500
HP 3582A 0.02Hz-25.5KHz....£2000

DATRON 1061A - 6 1/2 digit true RMS AC/Current....£1250
DATRON 1065 Multimeter 5 1/2 digit AC/DC/Ohms IEEE....£600
HEWLETT PACKARD 3490A Bench Multimeter 5 1/2 digit AC/DC/Ohms..£200
PHILIPS PM2534 Multifunction DMM 6 1/2 digit GPIB IEEE....£450
MARCONI Digital Frequency Meter 2430A 10Hz- 80MHz....£125
MARCONI Digital Frequency Meter 2431A 10Hz- 200MHz....£150
MARCONI Universal Counter Timer 2437 DC - 200MHz....£175
MARCONI Universal Counter Timer 2438 DC - 520MHz....£225
HP 3311A Function Generator 0.1Hz - 1MHz Sine/Square/Triangle....£125
BLACK STAR Jupitor 500 Sine/Sq/Tri 0.1Hz - 500KHz....£70
FEEDBACK FG600 Sine/Sq/Tri 0.1Hz - 100KHz....£60
MULTIMETERS Hand-Held M2355-32 ranges AC. DC 10A Diode/ Transistor Tester, Freq counter....£26.50

FARNELL ELECTRONIC LOAD RB1030-35 1KW 30A 35V....£600

HP 8690 Sweep Osc with 86974 Plug-in 26.5-40GHz....£300
RACAL/DANA RF Power Meter 9104....£400
RACAL/DANA 9341 Databridge. Automatic LCR & Q....£350
WAYNE KERR B905 Automatic Precision bridge 0.05%....£900
WAYNE KERR B605 Automatic Component bridge 0.1%....£350
FARNELL PSU TVS70MK2 70V 5A/30V/10A....£300
FARNELL PSU H60/25 0-50V 0-25A Metered....£400
FARNELL PSU L30E 0-30V 0-5A Metered....£80
FARNELL B30/20 0-30V 20A....£250
FARNELL B30/10 0-30V 10A....£200
HP 6255A 0-40V 0-1.5A Twice Metered....£130
HP 6209B 0-320V DC 1A Metered....£125
MARCONI TF2700 Universal LCR Bridge. Battery from....£150
AVO Characteristic Meter VCM163....£300
FARNELL LAS20 RF Power Amp. 1.5-520MHz 300mW....£175
RACAL 9100 Absorption Wattmeter 1MHz-1GHz 3W....£100

FARNELL Isolating Transformers
GU500, 240V 500VA, unused....£50

## NEW EQUIPMENT

**HAMEG** OSCILLOSCOPE HM1005 Triple Trace 100MHz Delay timebase....£847
**HAMEG** OSCILLOSCOPE HM604 Dual Trace 60MHz Delay sweep....£653
**HAMEG** OSCILLOSCOPE HM203.7 Dual Trace 20MHz Component Tester..£653
**HAMEG** OSCILLOSCOPE HM205.3 Dual Trace 20MHz Digital Storage....£653
All other models available - all oscilloscopes supplied with two probes

**BLACK STAR EQUIPMENT** (P&P all units £5)

**APOLLO** 10 - 100MHz Counter timer Ratio/Period/Time interval etc....£222
**APOLLO** 100 - 160MHz (As above with more functions)....£325
**METEOR** 100 FREQUENCY COUNTER 100MHz....£119
**METEOR** 600 FREQUENCY COUNTER 600MHz....£145
**METEOR** 1000 FREQUENCY COUNTER 1GHz....£189
**JUPITOR** 500 FUNCTION GEN 0.1Hz - 500KHz Sine/Square/Tri....£119
**ORION** COLOUR BAR GENERATOR Pal/TV/Video....£229
All other Black Star Equipment Available

**OSCILLOSCOPE PROBES** Switchable x1 x10(P&P £3)....£12

**Used Equipment - GUARANTEED. Manuals supplied if possible**

This is a VERY SMALL SAMPLE OF STOCK. SAE or telephone for lists. Please check availability before ordering. CARRIAGE all units £16. VAT to be added to total of Goods and Carriage

## STEWART of READING

110 WYKEHAM ROAD, READING, BERKS RG6 1PL
TELEPHONE (0734)268041 Fax: (0734)351696
Callers Welcome 9am-5.30pm Monday to Friday (until 8pm Thursday)

VISA Access

---

**Invertor toroidal transformers** 225A 10.5-0-10.5 primary 0-260-285 secondary £29.95
**LEDs** 3mm or 5mm red or green 6p each
yellow 11p each
High intensity red,green or yellow 5mm 30p each
cable ties 1p each or £5.95 per 1000 £49.50 per 10,000
**Small stepping motor** 4 phase 12V 7.5' step 50ohms £8.95
SAA1027 stepping motor drier chip £4.95
**Hi-quality** photo resist copper clad epoxy glass boards

| Dimensions | single sided | double sided |
|---|---|---|
| 3x4 inches | £0.95 | £1.07 |
| 4x8 inches | £2.40 | £2.68 |
| 6x12 inches | £5.37 | — |
| 12x12 inches | £10.66 | — |

**Rechargable Batteries**
AA(HP7)500mAH £0.99
AA 500mAH with solder tags £1.55
AA 700mAH £1.95
C(HP11) 1.8AH £2.20
C 2AH with solder tags £3.60
D(HP2) 1.2AH £2.60
D 4AH with solder tags £4.95
PP3 8.4V 110mAH £4.95
1/2AA with solder tags £1.55
Sub C with solder tags £2.50
AAA (HP16) 180mAH £1.75
1/3 AA with tags (Philips CTV) £1.95
**Standard charger** charges 4 AA cells in 5 hours or 4Cs or Ds in 12-14 hours+1xPP3 (1,2,3 or 4 cells may be charged at a time) £5.95
**High power charger** as above but charges the Cs and Ds in 5 hours AAs Cs and Ds must be charged in 2s or 4s £10.95
**Special offers please check for availability**
F cells 32dia x 87mm £3.95
F cell with solder tags 1.2V £4.30
42x 16mm dia 1.2V £1.45
stick of 4 171mmx16mm dia with red & black leads 4.8V £5.95
4 cell battery 94x25mm dia (1/2C cells)£3.50
**Computer grade capacitors** with screw terminals
38000uF 20V £2.50 87000uF 10V £1.95
68000uF 15V £2.95 10000uF 16V £1.50
58000uF 60V £4.95
**7segment** common anode LEDdisplay 12mm £0.45
LM2931AT5.0 low drop out 5V regulator TO220 package £0.85
7812 and 7912 12V 1A regulators £20.00 per 100
LM337k TO3 case Variable regulator £1.60 £1.10 100+
GaAs FET low leakage current S8873 £12.95 each £9.95 10+ 7.95 100+
BS250 P channel MOSFET £0.45
BC559 transistor £3.95 per 100
74LS05 hex invertor £10.00 per 100
used 8748 Microcontroler £3.50
SL952 UHF Limiting amplifier LC 16 surface mounting package with data sheet £1.95
AM27S02 £1.25 each 90p 100+
CD4007UB 10p 100+ 6p 1000+
Sinclair light gun terminat... ...ick plug and PP3 clip gives a signal whe... ...0Hz flickering light with output wave form chart £ 3.95
**DC-DC convertor** Reliability model V12P5 12V in 5V 200mA out 300V input to output Isolation with data £4.95 each or pack of ten £39.50
Hour counter used 7 digit 240V AC 50Hz £1.45
**QWERTY** keyboard 58 key Quality switches new £5.00
Airpax A82903-C large stepping motor 14V 7.5' step 27ohm 68mm dia body 6.3mm shaft £8.95 or £200.00 for a box of 30
**Polyester capacitors** box type 22.5mm lead pitch
0.9uf 250VDC 18p each 14p 100+ 9p 1000+
1uf 250VDC 20p each,15p 100+,10p 1000+
2.2uf 250VDC 30p each,20p 100+,15p 1000+
3.3uf 100VDC 30p each,20p 100+ 15p 1000+
1uf 50V bipolar electrolytic axial leads 15p each
7.5p 1000+ 0.22uF 250V polyester axial leads 15p each 7.5p 100+
**Philips 123 series** solid aluminium axial leads
33uF 10V & 2.2uF 40V 40p each, 25p 100+
**Philips 108 series** 22uF 63V axial 30p each 15p 1000+
Multilayer AVX ceramic capacitors all 5mm pitch 100V
100pF,150pF,220pF,10,000pF(10n) 10p each
5p 100+ 3.5p 1000+ 500pF compression trimmer 60p
40uF 370VAC motor start capacitor(dialectrol type containing no pcbs) £5.95 or £49.50 for 10
**Welwyn W23** 9W 120ohm 35p each 20p 100+
680 ohm 2W metal film resistor 4p 100+,2p 1000+
Solid carbon resistors.Very low inductance ideal for RF circuits 27ohm 2W,68ohm 2W 25p each 15p 100+
We have a range of 0.25w 0.5w 1w and 2w solid carbon resistors please send SAE for list.
Intelligent 4 digit alphanumeric (5x7 dot 0.145")red LED display12 pin 0.6 inch wide package Siemens type DLR1414 £2.50 each £2.00 30+ data sheets £1.00
AMD 27256-3 EPROMs £2.00 each £1.25 100+
DIP switch 3PCO 12 pin (ERG SDC-3-023) 60p each 40p 100+
Disk drive boxes for 5.25 disk drive with room for a power supply light grey plastic 67x268x247mm £7.95 or £49.50 for 10
Hand held ultrasonic remote control £3.95
CV2486 gas relay 30 x 10mm dia with 3 wireterminals will also work as a neon light 20p each or £7.50 per 100
A23 12V battery for car alarms or lighters 75p each £50.00 per 100

All products advertised are new and unused unless otherwise stated. Wide range of CMOS TTL 74HC 74F Linear Transistors kits. Rechargable batteries capacitors tools etc always in stock.
Please add **£1.95** towards P&P

*VAT included in all prices*

## JPG ELECTRONICS

**276-278 Chatsworth Road**
**Chesterfield S40 2BH**
**Access/Visa Orders**
**(0246) 211202**

**Callers welcome**

---

# AUTONA LTD

UK's leading module manufacturer since 1972

# SECURITY EQUIPMENT

## DIRECT FROM THE MANUFACTURER

NEW **2000 SERIES** NEW

**MICROPROCESSOR CONTROL UNITS**

★ EASY TO INSTALL ★ SIMPLE TO USE

- Auto alarm reset and reduction
- Alarm sounded memory
- Intelligent exit delay
- Built in loop checks

2250 Key pad operated **£54.95** + VAT

These brand new control panels use state of the art electronics to provide highly effective protection of the home, office or factory when used, with all sizes of security systems. Attractively styled in a steel case and supplied with full instructions.
Detailed colour brochure available.

2150 Key switch operated. **£49.95** + VAT

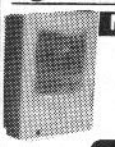

**MINIATURE PASSIVE INFRA-RED SENSOR-RP33**

**Switchable Dual range, detects intruders up to 6 or 12 metres**

Quantity discounts start at 3 units.

This advanced sensor operates by detecting the body heat of an intruder moving within the detection field. Slow ambient changes such as radiators, etc. are ignored. Easily installed in a room or hallway. Providing reliable operation from a 12V supply, it is ideal for use with the CA 1382 or equivalent high quality control unit. Supplied with full instructions.

**£16.95** + VAT

*Size 80x60x40mm*

**50FT INFRA-RED BEAM-IR 1470**

12V system for internal and external application.

**£25.61** + VAT

**DIGITAL ULTRASONIC DETECTOR-US 5063**

Variable sensitivity, adjustable noise threshold, with built in timers, ideal for vehicle alarms!

**£14.93** + VAT

**FULL RANGE OF CONTACTS, CABLE, SIRENS ETC.:- FOR COMPLETE SECURITY INSTALLATIONS**

# ★ AUDIO MODULES ★

**AL 12580-125W AMPLIFIER**

A rugged high powered module that is ideal for use in discos & P.A. Systems where powers of up to 125W, 4 ohms are required. The heavy duty output transistors ensure stable and reliable performance. It is currently supplied to a large number of equipment manufacturers where reliability and performance are the main considerations, whilst for others its low price is the major factor. Operating from a supply voltage of 40-80V into loads from 4-16 ohms.

**£18.95** + VAT

**AL 2550-COMPACT LOW-COST 25W AMPLIFIER**

A popular module with tens of thousands installed. Ideal for domestic applications. Supply rail 20-50V with loads of 8-16 ohms.

**£6.55** VAT

**MM 100-BUDGET 3-INPUT MIXER**

With a host of features including 3 individual level controls, a master volume and separate bass and treble control, it provides for inputs for microphone, magnetic pick-up and tape, or second pick-up (selectable), and yet costs considerably less than competitive units. This module is ideal for discos and public address units and operates from 45V-70V.

**£17.49** VAT

**MM 100G GUITAR MIXER**

As MM100 with two guitar + 1 microphone input intended for guitar amplifier applications.

**£17.49** + VAT

**COMPLETE AUDIO RANGE FROM 10-125W. SEND FOR DETAILS *TODAY***

**DEPT E**
**51 POPPY ROAD**
**PRINCES RISBOROUGH**
**BUCKS HP27 9DB**
**TEL: (0844) 346326**
**FAX: (0844) 347102**

VISA

Order by Credit Card for immediate dispatch.
Add V.A.T.
Carriage only £2.00
Export carriage 10%
– minimum £2.00

# Technoshop

## The page that could bring the world closer together

Electronics in Action in co-operation with The Technology Exchange Ltd, the international technology matchmaking service based in the UK, will be bringing you each month a selection of technology partnership opportunities to which you are invited to respond.

The Technology Exchange, which was formed in 1985 as a not-for-profit technology sourcing service to industry, holds a bi-annual 'Technoshop' Technology Transfer Fair at Heathrow Airport and several 'Techmart' Fairs overseas for the United Nations (UNIDO).

For this issue of Electronics in Action, we are presenting a series of business opportunities from European firms seeking technology partners in the UK indicating on each item whether it is an offer or a request for products or technology.

If you believe that you would qualify to be the partner for any firms described in these profiles, please write to The Technology Exchange quoting the item number and code letters at the head of the entry saying how you wish to respond and enclosing information on your own organisation and its products or services.

The only cost associated with this process is a simple £10 plus VAT introduction fee for each entry to which you respond. For this we will send you the information which we hold on the entry, transmit your response to the source of the entry and invite them to send you more detailed information about themselves and their entry.

The code letters on the entry number indicate the country where the partner is located as follows:-

### Code Letters

**TO/TR** - UK; **GOM** - Belgium; **SOFAD** - Spain; **GR** - Greece; **DTO** - Denmark; **IDA/E** - Ireland; **PME** - Portugal; **SG/SGT** - Italy; **A/ANG/DP** - France;
**B** - Bulgaria; **ZO/ZL/TVA** - Germany.
Please respond directly to: The Technology Exchange Ltd, Wrest Park, Silsoe, Bedford MK45 4HS or Fax: 0525 860664, Phone: 0525 860333. Please send £10 plus VAT (£11.75) per item with your requests.

### Offer DP 2 DISTRIBUTION OF BATTERIES IN FRANCE

A French company with a strong national distribution network for batteries, including 6 regional outlets of their own, seeks new batteries and suppliers to increase their product range. Batteries required cover full range from small watch batteries to large industrial units.

### Offer DP 3 ELECTRICAL CHARGERS AND UNINTERRUPTABLE POWER SUPPLIES

French manufacturer of the above quality products seeks a distributor to cover the entire UK market for uninterruptable power supplies. The company also seek commercial agreements for their range of 'telephone chargers' for central switchboard protection, as well as uninterruptable power supplies for computers.

### Offer/Request DP 22 DIGITAL RECOGNITION SOFTWARE

A prototype system has been developed for encoding and decoding personal information onto 'chip-cards' and paper for security control in banks, CNC machines, stock exchanges and automobiles. Know-how is offered to a partner who can apply the technology.

### Offer DP B 28 RANGE OF RECHARGEABLE SEALED LEAD ACID BATTERIES

Exclusive distribution for sealed lead acid batteries from 2 volts to 120 volts. These high quality batteries incorporate the latest and most efficient oxygen recombination technology, to completely eliminate maintenance. Uses in tools, instruments, medical equipment, lighting, computers, etc.

### Offer DP A 28 ELECTRONIC LEFT-LUGGAGE LOCKERS

A new generation of electronic left-luggage lockers, with optional payment facilities (coins or credit cards). Modular system incorporating lockers of varying sizes, alarm, electronic safeguard and central control unit for blocks of up to 32 lockers. Distributors wanted.

### Offer/Request DP 29 MULTI-LINGUAL WORD PROCESSOR - MULTIPOLIS

A word processor which allows text to be typed in many languages in the same document, without changing the keyboard or system configuration. Research sponsored by the French Government now requires input from various countries for tailoring to particular markets. Co-operation with partner which would include investment, which would be partially reimbursed by the French Government. (50 - 70% reimbursement).

### Request DP 31 OBJECT-ORIENTED DESIGN METHODOLOGY SOFTWARE

Research and development project to produce software tool for software developers. Urgently require a new team member to assist in the project and to take tool back to own organisation for utilisation and subsequently distribution in home market. Company should have experience in object-orientated software including knowledge of LISP, C and

**MORE NEXT MONTH**

# Subscribe

**to this magazine for 12 months and get 25% off our news-stand price**

**We will deliver to your door post paid for only**

# £20.25

**Dont miss out - subscribe today by sending your cheque or postal order (made payable to: Electronics in Action) to: Subscriptions Dept, QH Publications PO Box 600, Berkhamsted, Herts HP4 1NL**

ELECTRONICS in ACTION

This offer applies to UK Residents only



## Baylin Publications

***ALL ITEMS EX-STOCK.***

24 River Gardens,
Purley, Reading.
Berks. RG8 8BX
Tel/Fax 0734-414468
Mobile 0836-582785
*Pay by: UK£ cheque, Access, Mastercard, Visa, C.O.D.*

**Ku Band Satellite TV, Theory, Installation & Repair** 4th Edition. Footprints, dish theory, cables, site survey, polar mount adjustment. ***£23.***

**European Scrambling Systems, Circuits, Tactics & Techniques.** By John McCormac, digital sound, smart cards, pirate decoders, for hackers. (The New Black Book 3). ***£29.***

**World Satellite TV & Scrambling Methods.** 2nd edition, by Baylin, Madox & McCormac for the service engineer. ***£27.***

**Home Satellite TV Installation Videotape.** Forty minutes VHS Pal. See how 3 metre dishes are installed. ***£27.***

**Satellite Installation Guide.** 3rd Edition. By John Breeds. ***£12.***

**The Satellite Book. 2nd Edition.** A complete guide to satellite TV . Theory and practice by John Breeds. ***£28.***

**World Satellite Almanac.** 3rd Edition by Mark Long. 300 Footprints, Frequencies, Transponder Loading, Orbital Assignments. ***£59.***

**TVRO System Analysis and Aiming Software.** 5.25 or 3.5 disk, (DOS 3.2). Calculates dish size and lists coordinates of all satellites in view. Request hard disc version if footprint graphics are required. ***£35.***

**Wireless, Cable & SMATV**, Microwave broadcasting & cable TV. ***£30.***

**Satellite & Cable Scrambling and Descrambling.** 2ndEdn.basic theory. ***£19.***

***PRICES INCLUDE P. & P. UK. Airmail Europe add 10%. Outside Europe +20%.***



## SYSTEM 200 DEVICE PROGRAMMER

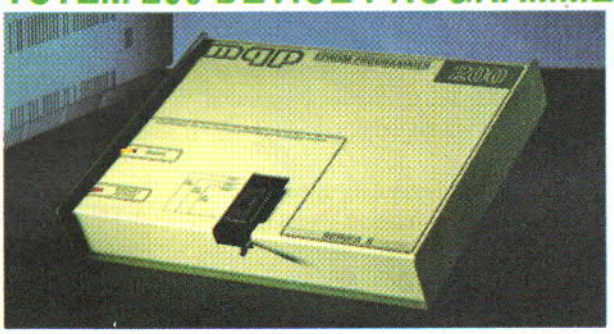

**SYSTEM:** Programs 24,28,32 pin EPROMs, EEPROMs, FLASH Memories and EPROM Emulators as standard, quickly, reliably and at low cost

Expandable to cover virtually any programmable part including serial EEPROMs, PALs, GALs, EPLDs and microcontrollers, in many different packages.

**DESIGN:** Not a plug-in card but connecting to the PC serial or parallel port; it comes complete with powerful yet easy to use software, cable and manual.

**SUPPORT:** UK design, manufacture and support. Same day dispatch, 12 month warranty. 10 day money back guarantee.

mqp

MQP ELECTRONICS Ltd
Park Road Centre
Malmesbury, Wiltshire SN16 0BX. UK
Tel: 0666 825146 Fax: 0666 825141

**ASK FOR FREE INFORMATION PACK**

GERMANY 089/4602071
NORWAY 071-17890
ITALY 02 92 10 35 54
FRANCE 1 69 30 13 79
Also from VEROSPEED UK

# The T

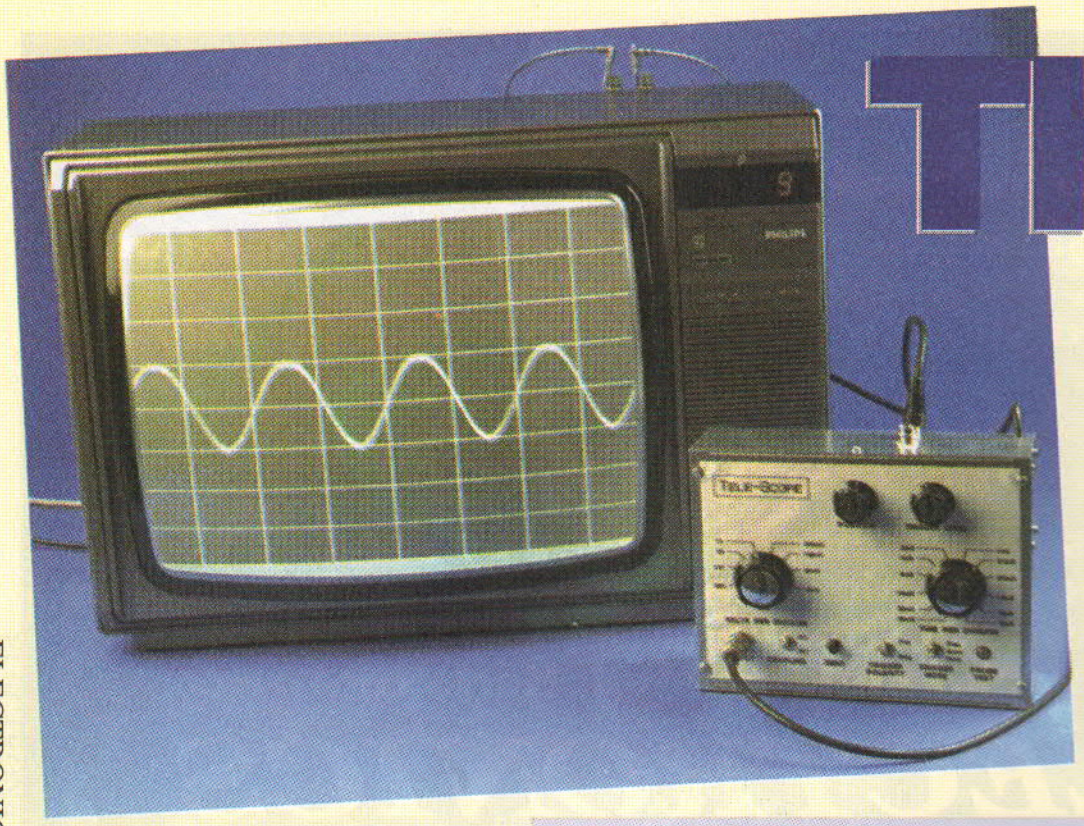

**Here is a Tele-scope that will not see stars but it is astronomically cheap. Paul Stenning provides the details.**

**PART ONE**

## Features and Specifications

| | |
|---|---|
| **Input Voltage Range** | 10mV/div to 30V/div in 8 steps |
| **Input Coupling** | AC to DC |
| **Input Impedance** | 1M nominal |
| **Input Bandwidth** | (DC) - DC to 20KHz |
| | (AC) - 2Hz to 20KHz |
| **Timebase Range** | 32us/div to 66ms/div in 12 steps |
| **Triggering modes** | Automatic |
| | Free Running |
| | Display Hold |
| **Graticule** | 8 x 8 rectangles |
| **RF o/p** | UK Channel 36 |
| **Video o/p** | PAL Composite Video |
| | approx 0.8V pk-pk into 75R |
| **Probe adjustment o/p** | 1V pk-pk nominal at approx 1KHz |

Trace vertical position adjustment with zero button
Adjustable triggering level, switchable to positive or negative going edge

Anyone who has used an oscilloscope would say it is equipment you can't do without because it gives a new insight into circuit operation. However a commercial oscilloscope is an expensive piece of equipment, which many people, hobbyists alike, cannot afford or justify.

The Tele-Scope presented here allows a normal television (black and white or colour) to be used as an oscilloscope display. No modification is required to the television, connection being made via the aerial (or video input) socket.

The unit is reasonably low cost, and uses readily available components. Setting up is straightforward and requires no test equipment.

The Tele-Scope may be useful in education and other applications where a number of people need to view the display. The composite video output could also provide a useful way of incorporating waveform displays into training videos etc.

Advantages over a conventional oscilloscope include a display hold facility, and the absence of flicker on slower timebase settings.

## Limitations

The unit is not a full oscilloscope and was designed to be made at reasonable cost. Consequently there are some limitations, and it is only fair that you are made aware of these before starting construction.

The most significant limitation is ▶

# Tele-scope

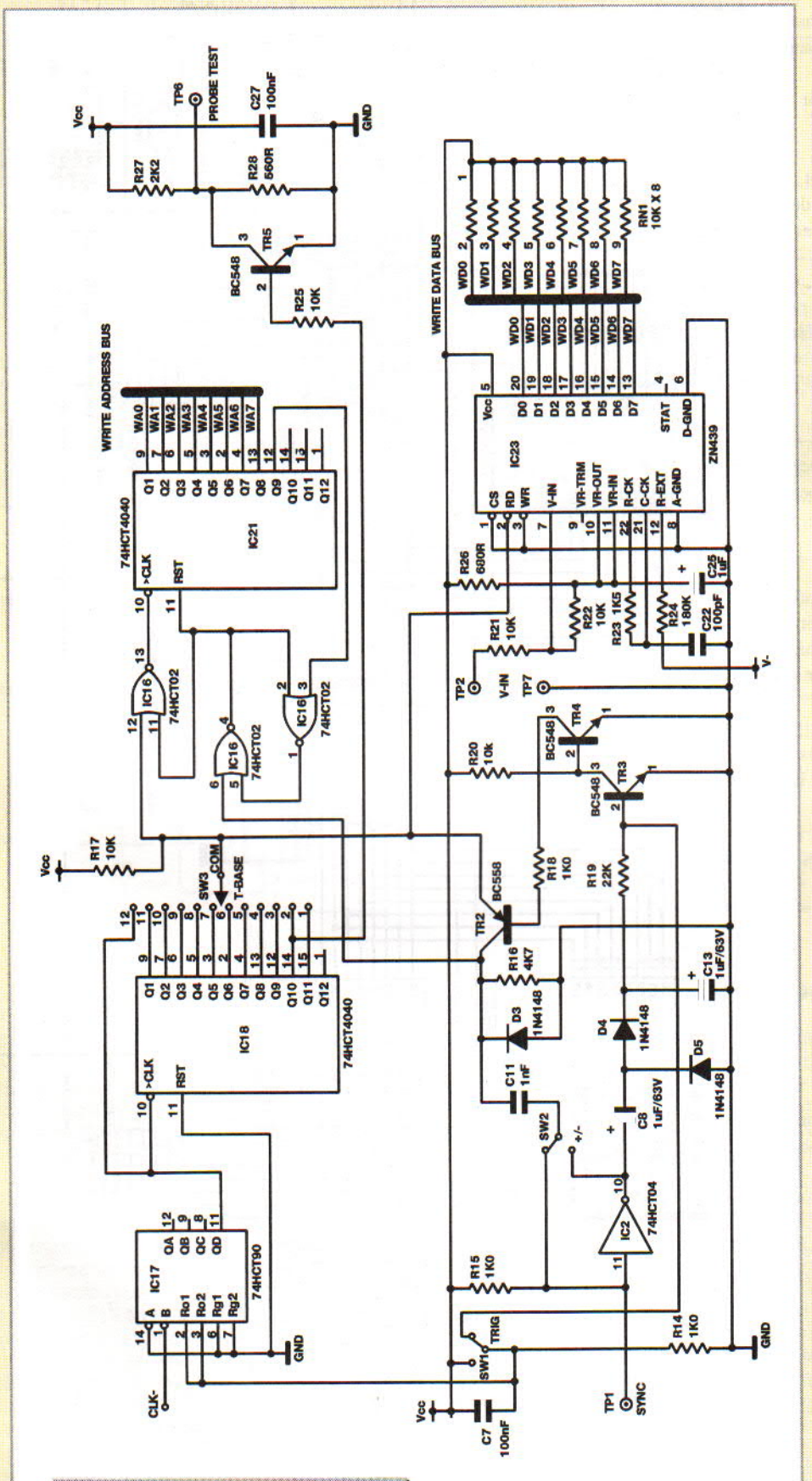


Fig.1Main circuit showing the timebase, sync and A/D sections

## The Works

### Memory Write

The timebase is selected by choosing a division of the clock frequency. This is carried out by IC17 (divide by 5) and IC18. This is then fed to IC21 via the sync circuit, the outputs of which drive the RAM address lines via IC5 when WRITE- is low. The A/D output drives the RAM data lines via IC10 at this time. The timing is critical for the Write Enable (WE-) pulses to the RAM, and appear to vary slightly with different makes of IC. As we are running this device at the limit of it's speed specification, a variable time delay is used and can be adjusted for best results with the device used.

### In Sync

With SW2 in centre position (Normal), the SYNC signal from the input PCB is pulled up by R15 (open collector), and fed to an inverter in IC2. SW2 provides either positive or negative edge triggering. If pulses are present, C13 will be charged, switching TR3 on. This then switches TR4 and TR5 off. The rising edges of the sync pulses pass to pin 6 of IC16 via C11. With no sync pulses, TR3 turns off (TR4 & 5 on) and sends the timebase frequency to pin 6 of IC16, resulting in a free running sync. This also occurs if SW2 was set so that TR3 base is grounded via R14 (Free Run position).

The three gates of IC16 between IC18 and IC21 form an S-R flip-flop, being set (pin 6)by the signals from the sync circuit, and reset at the end of a scan by pin 12 of IC21 going high. The first state allows the timebase clock to go to IC21 and the second state holds IC21 in reset. The third position of SW2 holds IC17 in reset, disables the timebase and A/D, and freezes the display.

One output from IC18 is buffered by TR5 and attenuated by R27-R28 for a probe test output.

**Fig.2 A,B & C Main Circuit, Logic and Video output diagrams respectivily**

the input bandwidth (frequency range). The maximum frequency signal that the unit can display is 20KHz. This is due primarily to the A-D convertor used, faster 8 bit convertors are available but are considerably more expensive than the one used here. Although it means the unit cannot be used with microprocessors, it is still handy for audio work, and digital projects operating at lower frequencies.

The timebase settings are not convenient figures, owing to a divider circuit on the main system clock (see 'The Works'). However the time per division figures are given and the period or frequency of any waveform can easily be established (although a calculator may be required).

***Setting up is straightforward and requires no test equipment***

The input is not protected against excessive input voltages, since adding protection caused more problems than it solved. The Input Range attenuator will give some protection on all but the 10mV range. Fortunately the input amplifier IC is an extremely low cost device, and can readily be replaced if the worst happens!

Since the trace is made up of 256 dots it will not necessarily appear as a continuous line (see screen photo), however the shape of the trace will normally be apparent if a suitable timebase setting is chosen.

There is no external triggering facility. If the signal is too large to display it will clip at the top and/or bottom of the display.

Finally before looking at the construction, when reading about the circuit operation is is wise to start with the main circuit on page 61.

## PCB Construction

The input circuit is constructed on a single sided PCB, 2" x 3.8" in size. The component overlay of will be shown next month. Construction is straightforward but do not forget the two links. IC sockets can be used if desired - one is recommended for IC1 as this may have to be replaced if an excessive input voltage is applied to the unit. Veropins should be fitted for the ▶

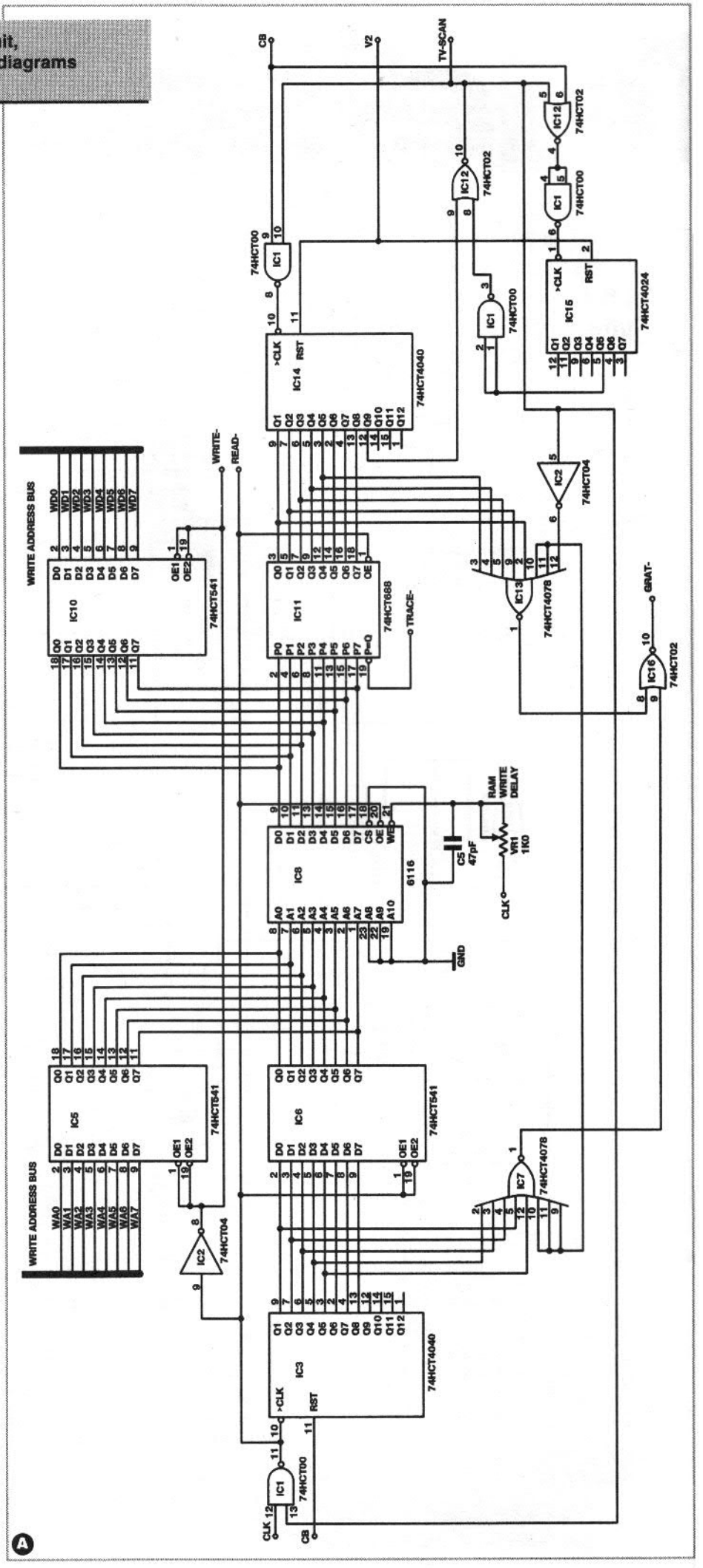

## The Works

### Main PCB

The main circuit diagram is shown in Figure 1 & 2, whilst the input circuit will be shown next month.

In this description, any signal name which is followed by a minus sign (e.g. READ-) is active low.

The heart of the circuit is IC8, a 2K 6116 RAM chip. One section of the circuit writes data from the A-D convertor into RAM, whilst another reads the RAM and displays the trace on the screen. These two processes run asynchronously, conflict being avoided by the use of tri-state buffers controlled by the READ- and WRITE- lines. This will all be explained in detail as we continue!

Only 256 RAM locations are used, the remaining address lines are tied low. A 2K IC was used because it was the cheapest device available, that was fast enough for this application. Each memory location contains a value between 0 and 255, which comes from the A-D. A value of 0 will give a dot in the appropriate position on the top active line of the display, whilst a value of 255 equates to the bottom line. The A-D gives a value of 0 for zero input and 255 for maximum input. This is the opposite of what is required and is resolved by an inverting stage in the input amplifier.

The timing of the whole circuit is controlled by IC4, a universal sync generator, which in this case in configured to operate in 624 line video game mode. This results in frames of 312 lines, and gives less flicker than standard 625 line interlaced mode, whilst retaining compatibility with 625 line PAL equipment. The circuit clock is derived from the crystal oscillator of this IC, via two gates of IC2.

### Memory Read

The CB (Composite Blanking) line from IC2 is high during the frame sync period, and pulses high during the line sync period. Counters IC14 and IC15 are reset by the V2 signal, which pulses high during the frame sync. Initially pin 5 of IC15 is low so the CB pulses are fed to IC15. After 16 such pulses IC15 pin 5 goes high, switching subsequent CB pulses to IC14. The effect of this is to give 16 blank lines at the top of the screen before the display starts.

The next 256 CB pulses drive counter IC14, and these are the 256 active lines of the display. On the 256th pulse pin 12 of IC14 goes high, diverting the CB pulses back to IC15 for the remainder of the frame. During the 256 active lines, the TV-SCAN line is high and the CLK signal is fed to counter IC3. This IC counts to 255 during each line, and is reset at the end of the line by the CB signal.

Hence we have two counters, one counting the active lines (0 to 255), and the other counting from 0 to 255 along each line. The graticule is generated by NOR gates on the Q1 to Q5 outputs of these two counters, resulting in a GRAT- signal.

The clock pulses to IC3 are also used as the READ- signal, and an inverted form of this is the WRITE- signal.

When READ- is low, the outputs of IC3 are coupled to the RAM (IC8) address lines via tri-state driver IC6. The READ- line also drives the RAM Output Enable (OE-) line, and the contents of the memory location addressed is output on the data lines. IC11 is a logic comparator, the output of which goes low if the data on P0 to P7 is the same as that on Q0 to Q7. This compares the output of counter IC14 with the data from the RAM, if the two are the same then a trace dot will appear on the screen (TRACE- signal).

The GRAT- and TRACE- signals are latched into two D-type flip-flops (IC9), which extend the pulses over the write period. The timing of the TRACE- signal is fairly critical (the pulse is short due to propagation delays), hence the time delay circuit on the clock inputs of the D-types.

The signals from the D-types are combined with CB and CS (Composite Sync) through logic gates and resistors to form the composite video signal, which is buffered by TR1 before driving the modulator (MOD1) and the video output socket.

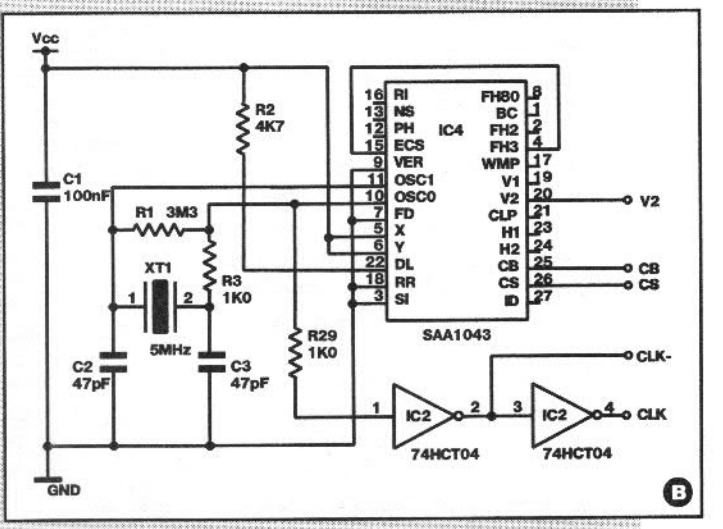


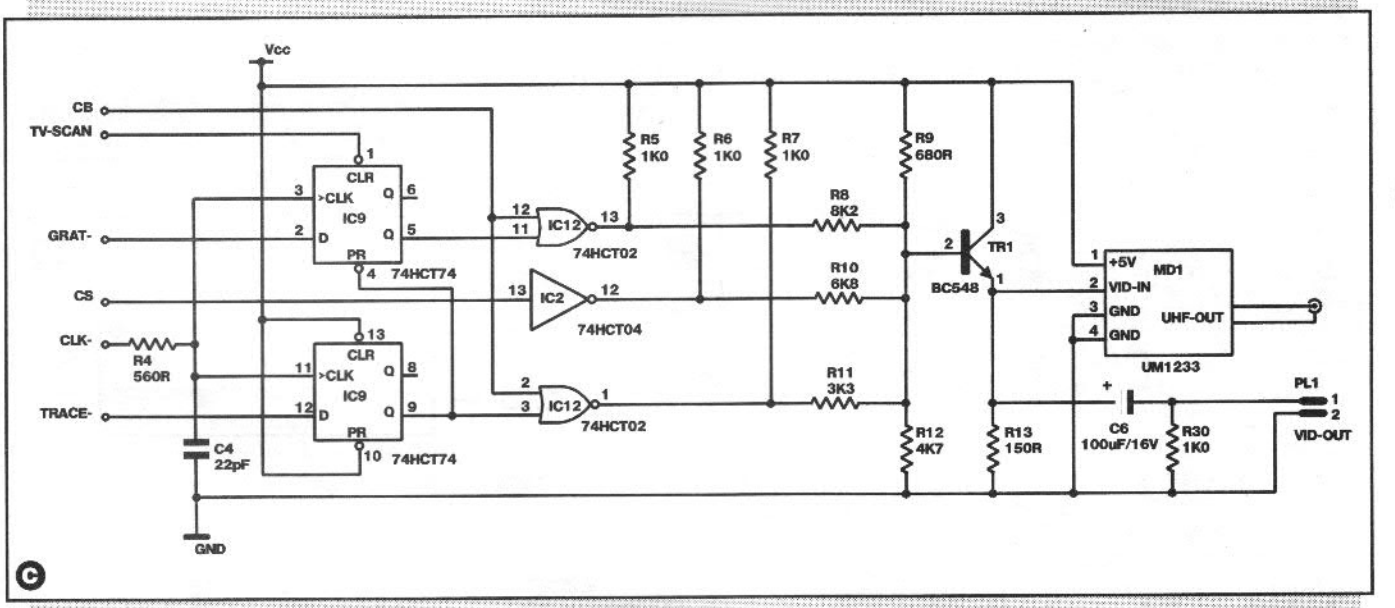

off-board connections.

The switch is fitted by cutting the loops from the ends of the pins, the holes in the PCB may have to be enlarged to accommodate the pins. Alternatively short lengths of tinned wire may be soldered to the pins and the assembly then fitted to the PCB. The switch stop should be set to 8 positions.

The main circuit is constructed on another single sided PCB, 5" x 7" in size. The component overlay is shown in figure 3.

This board is a little more fiddly to assemble. Firstly the links should be fitted. There are about 80 of these, and some run underneath the bodies of IC's. Thin (about 28SWG) tinned copper wire is recommended for these.

The remaining components can then be fitted, in the usual size order. IC sockets may be used, and are recommended for IC's 4, 8 and 23 since these are more expensive. Veropins or 0.1" header strip connectors should be used for the off-board connections.

If standard 7812 and 7912 devices are used for IC22 and IC23, they should be fitted with their metal tabs towards C21 and C23 (see photo of main PCB).

The 5V regulator (IC19) will run rather warm and a small heatsink or metal bracket should be fitted. Alternatively the regulator could be mounted on a metal panel of the case, and connected to the PCB with short lengths of wire.

Check the PCB very thoroughly after construction, as errors can be difficult to track down with this sort of circuit - particularly if you do not have an oscilloscope!

**Main Circuit**

**Resistors**

(All 0.25W, 5% or better).

| | |
|---|---|
| R1 | 3M3 |
| R2,12,16 | 4K7 |
| R3,5-7,14,15 | 1K0 |
| R18,29,30 | 1K0 |
| R4,28 | 560R |
| R8 | 8K2 |
| R9,26 | 680R |
| R10 | 6K8 |
| R11 | 3K3 |
| R17,20-22,25 | 10K |
| R13 | 150R |
| R19 | 22K |
| R23 | 1K5 |
| R24 | 180K |
| R27 | 2K2 |
| RN1 | 10K x 8 SIL Resistor Network |
| VR1 | 1K0 Horizontal Preset |

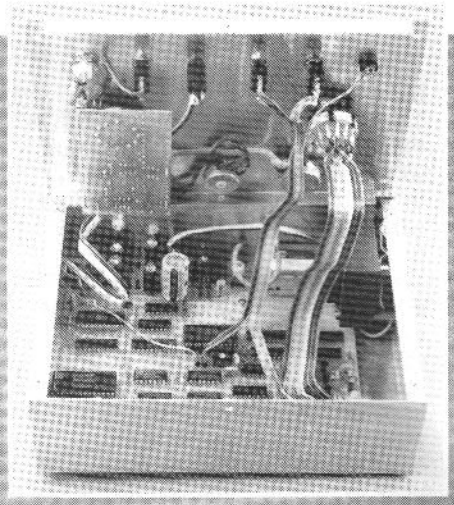

## The Case

The prototype was housed in a plain aluminum box, 6" x 8" x 2" being functional but not very elegant. It was also not quite large enough, so something slightly bigger might be advantageous. A metal box is preferable for screening, a painted die-

**Fig.3 Component positioning on Main PCB**

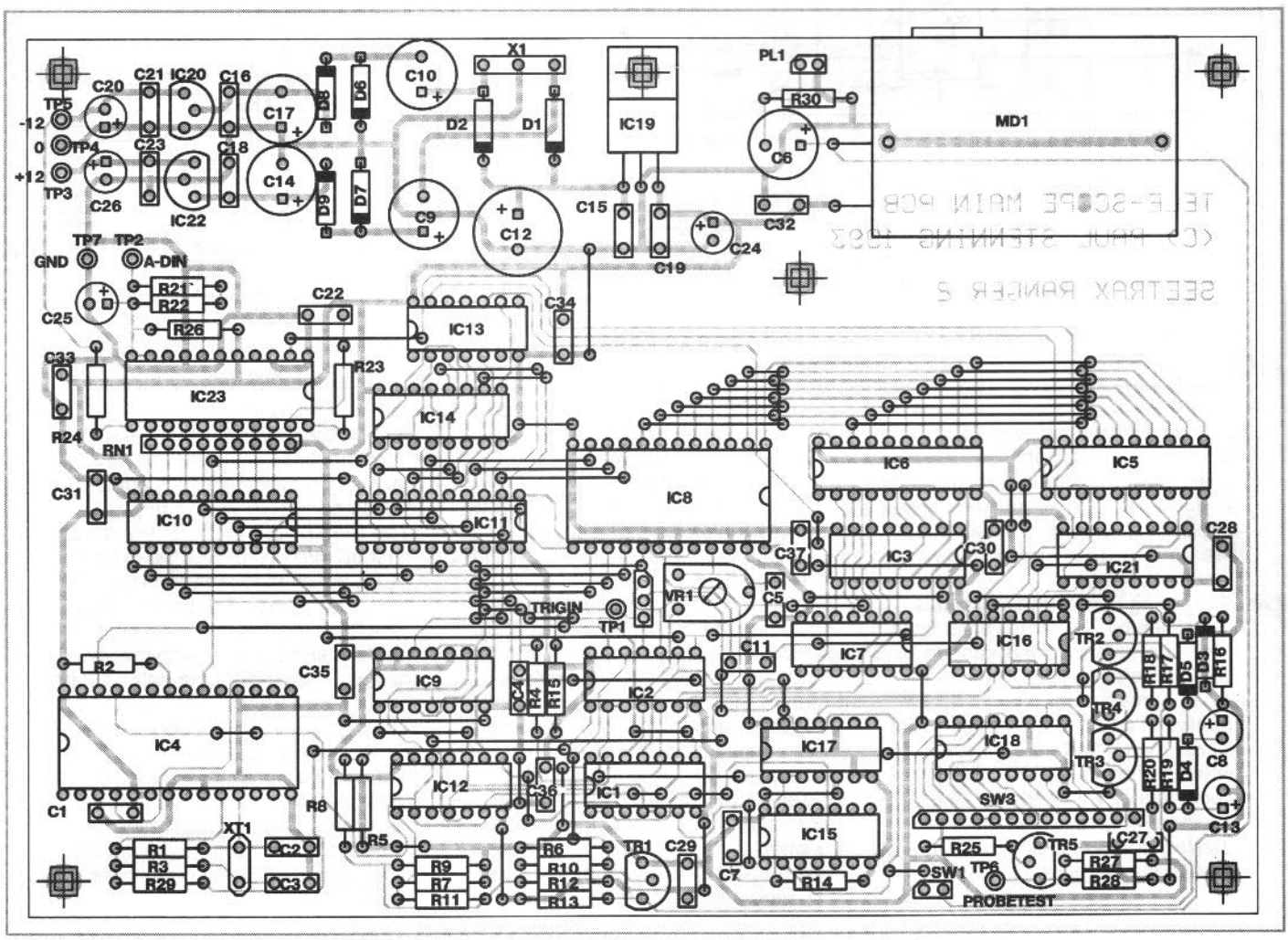

## Parts

**Semiconductors**

| | |
|---|---|
| TR1,3-5 | BC548 or equiv |
| TR2 | BC558 or equiv |
| D1,2,6-9 | 1N4001 |
| D3-5 | 1N4148 |
| IC1 | 74HCT00 or 74LS00 |
| IC2 | 74HCT04 or 74LS04 |
| IC3,14,18,21 | 74HCT4040 |
| IC4 | SAA1043 |
| IC5,6,10 | 74HCT541 or 74LS541 |
| IC7,13 | 74HCT4078 |
| IC8 | 6116 2K x 8 RAM 150nS |
| IC9 | 74HCT74 or 74LS74 |
| IC11 | 74HCT688 or 74LS688 |
| IC12,16 | 74HCT02 or 74LS02 |
| IC15 | 74HCT4024 |
| IC17 | 74LS90 |
| IC19 | 7805 |
| IC20 | 79L12 or 7912 |
| IC22 | 78L12 or 7812 |
| IC23 | ZN439 |

**Capacitors**

| | |
|---|---|
| C1,7,15,16,18 | 100n |
| C19,21,23,27-37 | 100n |
| C2,3,5 | 47p |
| C4 | 22p |
| C6 | 100µ 16V Radial |
| C8,13,25 | 1µ0 63V Radial |
| C9,10,14,17 | 220µ 25V Radial |
| C11 | 1n0 |
| C12 | 2200µ 16V Radial |
| C20,24,26 | 10µ 25V Radial |
| C22 | 100p |

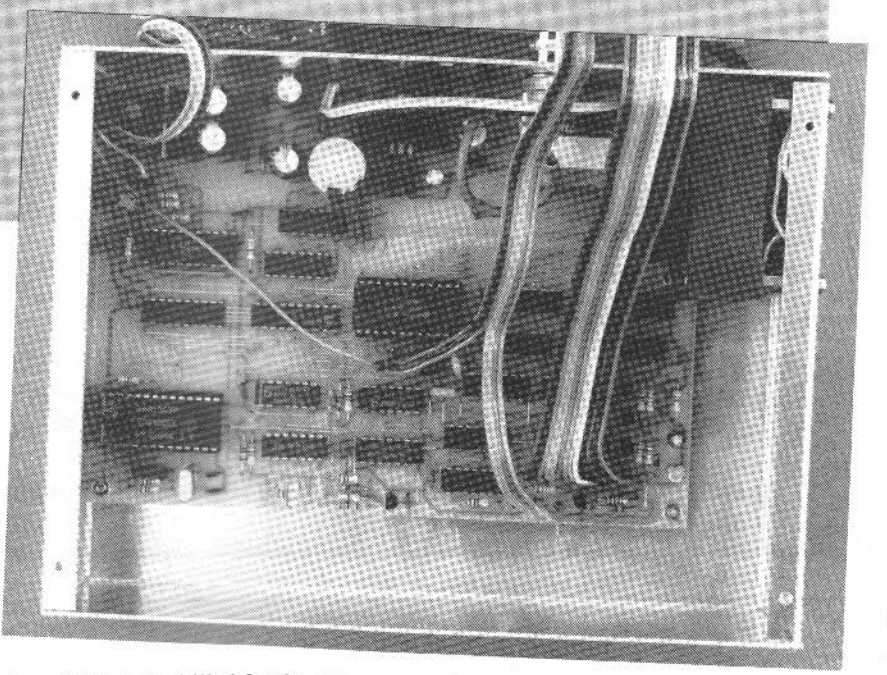

cast type may be suitable. There are a several controls on the front panel so a box with a large front area would suffice.

The input PCB is mounted on whatever surface is chosen for the control panel, by the switch mounting nut. The input socket and associated controls for this PCB should be mounted reasonably close to prevent noise pick-up.

The whole input PCB assembly could be screened if required by fitting a suitable die-cast box or similar around it. If the base of this box is drilled to match the panel of the case, it can be held in place by the control fixings. This may prove necessary as the prototype showed a little noise on the more sensitive input ranges.

The remaining controls should be positioned away from the input PCB if possible, again to reduce noise. The stop on the Timebase switch should be removed to allow the full 12 positions.

The main PCB should be mounted towards the rear of the case, and a suitable hole drilled for the RF output socket on the modulator. Holes are also required for the video output socket and the mains cable, the latter should be fitted with a cable clip or grommet.

The transformer can be mounted wherever there is room, but it should be well away from the input circuit and the A-D convertor. The unit is now ready for wiring up and will be described next month. Remember, any mains connections should be sleeved for safety and any metal panels on the case, and the 0V rail of the circuit, must be earthed.

Details of the input board, power supply and interwiring will appear in Part 2. The front panel controls will be shown next month together with a copy of the prototype artwork which may be photocopied, placed on the case and covered with clear self-adhesive vinyl.



**BADGER BOARDS**

**Printed circuit boards for Amateur Radio, Schools, Colleges Short Wave Listeners, Clubs, Hobbyist & Industry**

A range of Printed Circuit Boards in stock from many of the projects and magazines

**PRACTICAL WIRELESS, SHORT WAVE MAGAZINE, ELEKTOR, HRT, RADIO COMMUNICATION**

Kits, Projects and Materials for manufacturing your own boards. Artwork and Plotting from your own schematic drawings and also CAD facilities. We supply ONE-OFF prototypes. Phone between **9.00am and 5.30pm Monday to Friday** for helpful advice and assistance. Club talks and demonstrations of Printed Circuit Board manufacture. QRP involvement etc.

**021 353 9326**

**87,Blackberry Lane, Four Oaks, Sutton Coldfield. B74 4JF**

(Please mention where you saw this advert)

**OMNI ELECTRONICS**

**174 Dalkeith Road, Edinburgh EH16 5DX - 031 667 2611**

**The supplier to use if you're looking for:**

- **A WIDE RANGE OF COMPONENTS AIMED AT THE HOBBYIST**
- **COMPETITIVE VAT INCLUSIVE PRICES**
- **MAIL ORDER - generally by RETURN OF POST**
- **FRIENDLY SERVICE**

Access **Open: Monday - Thursday 9.15 - 6.00 Friday 9.15 - 5.00 Saturday 9.30 - 5.00** VISA

# PCB DESIGN SOFTWARE

LOW COST

## RANGER 1
XT/AT PC
**Circuit — PCB**
From Circuit Design Through to Artwork In One Package!

**£100**

Fully Integrated AutoRouter

**£50**

Exchange your easy PC For a free AutoRouter

NEW

## RANGER 2
XT/AT + 386 PC

It has all the features you will ever need at an outstanding price. But now with a new 2 layer 386 Ripup & Retry AutoRouter

**£599**

Option Pack 100% Router
Simultaneous 6 layer Ripup & Retry AutoRouter with via Minimisation.
Autocad DXF in & out. GERBER in.

**£350**

**Call us for details & demo disk on 0705 591037**

SEETRAX CAE

*Seetrax CAE. Hinton Daubnay House, Broadway Lane, Lovedean, Hants. PO8 0SG*
*Tel: 0705 591037 Fax 0705 599036*

# SPECIAL OFFER

Those Engineers Ltd

**SpiceAge for Windows for £95 incl VAT for a limited period.**

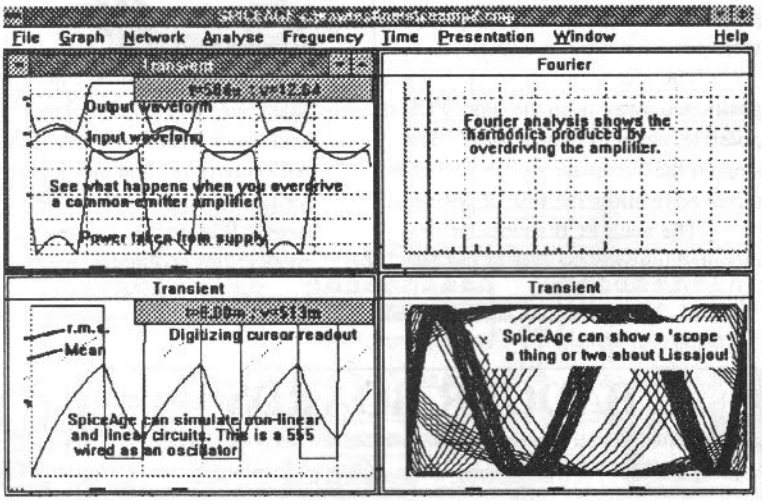


We are offering a special version of SpiceAge for Windows to students and serious hobbyists. The version will analyse medium sizes of circuits and may be upgraded to the professional version for the price difference.

SpiceAge is the program used by professional circuit designers that lets you "breadboard" even before you plug in your soldering iron. It gives you quiescent DC voltages, frequency response curves and 'scope-like traces of your circuit ideas. Imagine how easy it is to test new components and values without the risk of smoke! SpiceAge has a friendly editor that lets you tell it what components to put in your circuit and how to connect them. SpiceAge has a "lab" full of "test equipment" to let you inject signals and "probe" for voltages, currents, dissipations, dB gains, phase angle, group delay and power consumption.

Requires Windows 3.0 or higher. S.A.E. please for information pack or £5 for demonstration kit. ACCESS/VISA or cheque with order. Please state disk size. Those Engineers Ltd, Dept Ek03, 31 Birkbeck Road, London NW7 4BP. Tel 081-906 0155, Fax 081-906 0969.

# Future View

**Chris Frost, project leader for IBM talks about the PC Videophone, a joint venture project by IBM and BT and its impact it will have on our future.**
**Where is technology taking us?**

Many of us are now familiar with the digital bandwidth explosion, with the imminent convergence of telecommunications, personal computers and television. My own project know as 'Coco' - an alliance between IBM and BT in the United Kingdom, is a good example of this. Awareness of these developments from a technical viewpoint is no longer confined to a small band of 'inner circle' standard setters and product developers. The new products can solve a growing number of problems in business and they are laying concrete plans, not just to install the products, but to completely reconsider their current work and travel patterns.

The effect of these changes and how soon they will be with us, is only now beginning to be realised. Their consequences, from a technical, social, political and environmental viewpoint, are intriguing, and it is already clear they can deliver great benefit to society globally.

## Communication Costs

Most of the long haul inter-exchange routes in the UK are already served with optical fibre circuits, and this is also true for most of the popular international call destination countries. The arrival of fibre optics makes a dramatic difference to the costs (though not yet the prices) of interconnection to subscribers. For example, in 1960 a telephone call from London to Edinburgh occupied for its duration, over 100 tons of copper strung in wires alongside the railway line. By comparison in 1993, a full motion video conference call between the same two destinations occupies around 30Kg of glass fibre. It is very special glass and whichever way you do the maths, the true costs are dramatically lower. Maybe three or four orders of magnitude lower.

It is the same with information technology (IT). The ever accelerating performance of componentry allows near instantaneous compression and decompression of TV pictures. As a result, they can be moved from point to point using far less bandwidth than was imaginable even as recently as five years ago.

Putting these two trends together, we reach a 'right angle' moments when everything changes at once and we are obliged to throw a large number of old assumptions out of the window.

The 'Coco' PC Videophone alliance between IBM and BT in the UK illustrates this very well. We are bringing to market a simple add-on kit that will fit into IBM or IBM compatible PCs. This amounts to somewhere in excess of 2 million people in the UK who have recently purchased these computers.

**The kit consists of :-**

- A plug-in card supporting BT's ISDN.2 service, voice and video signal compression/decompression to CCITT standards, and windowing support to focus the picture into a PC window.
- A small but highly quality television camera.
- A specially designed digital handset.
- A plug box for connecting camcorders, VCR's, auxiliary monitor etc.
- Some special software to make it easy to use, so that even senior executives can intercommunicate with confidence.

The initial price will be around £3000, but as volume builds, this will drop to less than £1,000 within a few years.

The glory of ISDN.2 is that it uses the existing telephone wires to your office desk or home, and has coverage of intended users.

So very soon, people will be able to 'PC Videophone' one another and engage in direct desktop videoconferencing, sharing information simultaneously on their screens. It is as if they were sitting opposite one another the same desk.

And that's not all. Multiple users can 'meet' by dialling a hub 'virtual conference room'.

Users can access stereo video services such as the weather forecast, 'News at Ten' or Tokyo 2.

Almost every user in every industry and walk of life has individual ideas on how we will first use such a facility. Even now we can generalise about some of the early and most pressing applications, for example, senior and middle management would 'conference' on the 'phone to avoid the need to take the shuttle train, or join the queue around the M25.

Distributed workgroups would benefit, where a team of engineers, designers and financiers can spread across multiple organisations and geographical locations to work together as if they were co-located on the same floor of the same building.

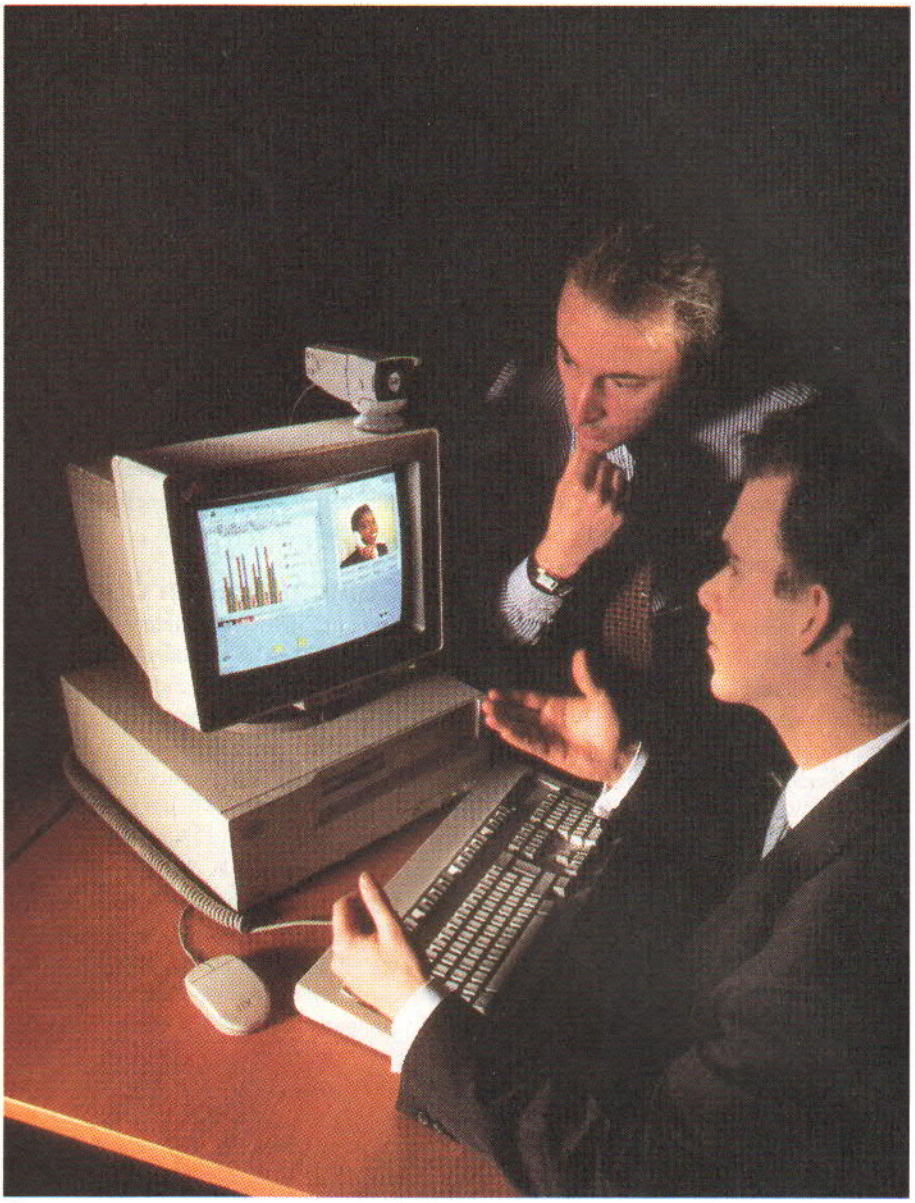

Access to remote expertise will give the user information on how to service a jet engine, finance his house, fix his computer software, can dial a 'help' organisation and get immediate assistance, chargeable or free.

It would change working patterns and working at home would become even more convenient.

It is already becoming evident that these changes will have a great impact on work and living patterns. Exactly where the impact will initially be felt is a matter for debate, and that debate has already started. Readers may care to join in and ponder over what aspects of life there will be winners and losers of the this technology in the following:

- Large office buildings in prime city sites.
- Air travel generally.
- Club class air travel.
- Motorway construction.
- Residential property.
- Industrial consultancy.
- IT and Communication Industry.

When new and powerful communication tools arrive the end result is a kind of democracy in action. Geoff Robinson, who headed IBM's Hursley development laboratory, and is now advisor to the DTI, once observed that as soon as the number of telephones per capita in any country exceeded 40 per thousand, then democracy was inevitable! The recent events in the former Soviet Union prove this point. We are about to see a fresh wave of consumer-driven, marketplace and culture driven change, and I am convinced the PC Videophone will play a major part.

**Chris Frost is project leader for the PC Videophone at IBM.**

# WARNING!

This product contains scenes of graphic violence and pure evil which may offend some users.

Virgin® GAMES

## The CD ROM drive bundle that could *scare* you out of your wits and priced at £299* will frighten the competition.

Being Philips leading distributor of CD-ROM drives we've taken the **Philips CDD462** MPC/Photo CD external CD-ROM drive and have added two top selling CD packages **Lotus 1-2-3** for Windows with multimedia Smart Help and **Virgin's - The 7th Guest** *(a sound card will be needed to play the game properly).*

By night you can play the 7th Guest with its full screen video ghosts and by day you can use Lotus 1-2-3 to help you figure it all out.

While you may find The 7th Guest a little frightening there's no horror stories in installing the Philips CDD462 external CD-ROM drive. Simply plug the interface card into a spare slot in your PC, install the driver software, connect the CDD462 and away you go, it's as easy as 1-2-3!


***CD Revolution Ltd***

*21 London Street, Chertsey, Surrey KT16 8AP*

***Tel: 0932 562000*** *Fax: 0932 571999*

**Philips CDD462** A workhorse external CD-ROM drive MPC/ multi-session (Photo CD). Easy to install with an AT-Bus short card. Doubles up as an easy to use CD-Audio player with full controls. MRP - **£349** + VAT

**The 7th Guest** - assembles a cast of 23 full screen, full motion video actors in the world's first CD Interactive Drama set inside the haunted hilltop mansion of twisted toy maker Henry Stauf - **£60** +VAT

Lotus 1-2-3 for Windows

**Lotus 123 -** One of the world's first spreadsheets makes another first with this CD-ROM version & Multimedia SmartHelp. The Movie Show & SmartHelp provides an impressive mix of animation & sound.

**CD Revolution Audiowave-16** Full 16-bit recording/playback gives stereo sound at 44.1KHz at 4W per channel. Complete with voice recognition, Sound-Blaster & Windows Sound compatibility - **£129** + VAT

*All trade marks recognised. Specifications subject to change without prior notice. * All prices exclude VAT.*

# Summer 1993 CATALOGUE

£1.90

Electronic constructors catalogue

- components
- kits
- test equipment

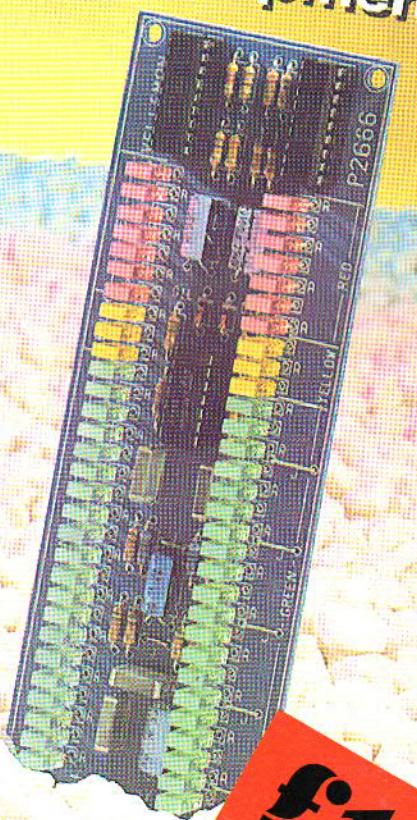

- 224 Pages
- 26 Sections
- Over 4000 lines
- Send for your copy today!

32 EXTRA

Low Cost Sec… Products

Scanning Receivers covering all mobile frequencies

**£1.90**
+30p p+p

ISSN 0955-1107

Summer 1993

**Cirkit**

**Cirkit Distribution Ltd**
Park Lane · Broxbourne · Hertfordshire · EN10 7NQ
Telephone (0992) 444111 · Fax (0992) 464457

Access VISA